See Sheet 1-A For Index of Sheets

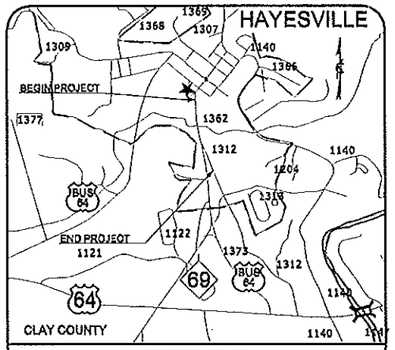

VICINITY MAP

STATE OF NORTH CAROLINA
DIVISION OF HIGHWAYS

CLAY COUNTY

LOCATION: BUS-64 & SR-1312

TYPE OF WORK: SIDEWALK AND DRAINAGE

STATE	STATE PROJECT REFERENCE NO.	SHEET NO.	TOTAL SHEETS
N.C.	SR-5001AZ	1	

STATE PROJ. NO.	F.A. PROJ. NO.	DESCRIPTION

END STATE PROJECT
-Y- STA. 4+50

BEGIN STATE PROJECT
-L- STA. 0+00

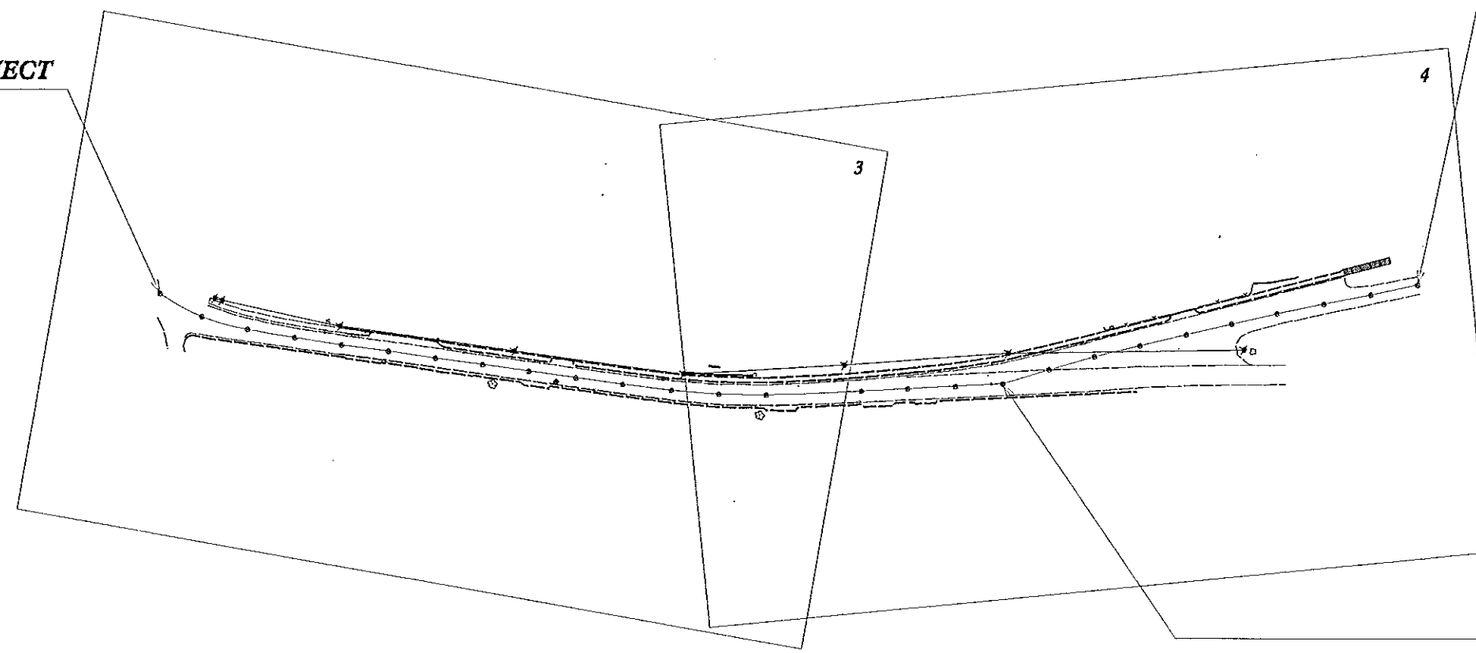

-L- STA. 9+00
-Y- STA. 0+00

PROJECT: SR-5001AZ

GRAPHIC SCALES

50 25 0 50 100
PLANS

PROJECT LENGTH

TOTAL LENGTH STATE PROJECT = 0.26 MILES

Prepared in the Office of:
DIVISION OF HIGHWAYS
191 Robbinsville Rd., Andrews, NC 28901

2006 STANDARD SPECIFICATIONS

RIGHT OF WAY DATE:

LETTING DATE:

WESLEY GRINDSTAFF, P.E.
PROJECT ENGINEER

ADAM DOCKERY
PROJECT DESIGN ENGINEER

DIVISION OF HIGHWAYS
STATE OF NORTH CAROLINA

P.E.
STATE HIGHWAY DESIGN ENGINEER

STATE OF NORTH CAROLINA
DIVISION OF HIGHWAYS

INDEX OF SHEETS

1	TITLE SHEET
1-A	INDEX OF SHEETS
1-B	CONVENTIONAL SYMBOLS
2	HANDRAIL DETAIL
2-A	WATTLE WITH PAM DETAIL
3	SUMMARY OF QUANTITIES
4 THRU 5	PLAN SHEETS

PROJECT REFERENCE NO.	SHEET NO.
SR-5001AZ	1-B

Note: Not to Scale

**S.U.E. = Subsurface Utility Engineering*

STATE OF NORTH CAROLINA
DIVISION OF HIGHWAYS

CONVENTIONAL PLAN SHEET SYMBOLS

BOUNDARIES AND PROPERTY:

- State Line
- County Line
- Township Line
- City Line
- Reservation Line
- Property Line
- Existing Iron Pin — IP
- Property Corner
- Property Monument — EM
- Parcel/Sequence Number — 123
- Existing Fence Line
- Proposed Woven Wire Fence
- Proposed Chain Link Fence
- Proposed Barbed Wire Fence
- Existing Wetland Boundary — W.B
- Proposed Wetland Boundary — W.B
- Existing Endangered Animal Boundary — E.A.B
- Existing Endangered Plant Boundary — E.P.B

BUILDINGS AND OTHER CULTURE:

- Gas Pump Vent or U/G Tank Cap
- Sign — S
- Well — W
- Small Mine
- Foundation
- Area Outline
- Cemetery
- Building
- School
- Church
- Dam

HYDROLOGY:

- Stream or Body of Water
- Hydro, Pool or Reservoir
- Jurisdictional Stream — JS
- Buffer Zone 1 — BZ 1
- Buffer Zone 2 — BZ 2
- Flow Arrow
- Disappearing Stream
- Spring
- Wetland
- Proposed Lateral, Tail, Head Ditch
- False Sump

RAILROADS:

- Standard Gauge — CSX TRANSPORTATION
- RR Signal Milepost — MILEPOST 35
- Switch — SWITCH
- RR Abandoned
- RR Dismantled

RIGHT OF WAY:

- Baseline Control Point
- Existing Right of Way Marker
- Existing Right of Way Line
- Proposed Right of Way Line
- Proposed Right of Way Line with Iron Pin and Cap Marker
- Proposed Right of Way Line with Concrete or Granite Marker
- Existing Control of Access
- Proposed Control of Access
- Existing Easement Line — E
- Proposed Temporary Construction Easement — E
- Proposed Temporary Drainage Easement — TDE
- Proposed Permanent Drainage Easement — PDE
- Proposed Permanent Drainage / Utility Easement — DUE
- Proposed Permanent Utility Easement — PUE
- Proposed Temporary Utility Easement — TUE
- Proposed Permanent Easement with Iron Pin and Cap Marker

ROADS AND RELATED FEATURES:

- Existing Edge of Pavement
- Existing Curb
- Proposed Slope Stakes Cut — C
- Proposed Slope Stakes Fill — F
- Proposed Wheel Chair Ramp — WCR
- Existing Metal Guardrail
- Proposed Guardrail
- Existing Cable Guiderail
- Proposed Cable Guiderail
- Equality Symbol
- Concrete Removal

VEGETATION:

- Single Tree
- Single Shrub
- Hedge
- Woods Line
- Orchard
- Vineyard — Vineyard

EXISTING STRUCTURES:

MAJOR:

- Bridge, Tunnel or Box Culvert — CONC
- Bridge Wing Wall, Head Wall and End Wall — CONC WW

MINOR:

- Head and End Wall — CONC HW
- Pipe Culvert
- Footbridge
- Drainage Box: Catch Basin, DI or JB — CB
- Paved Ditch Gutter
- Storm Sewer Manhole — S
- Storm Sewer — S

UTILITIES:

POWER:

- Existing Power Pole
- Proposed Power Pole
- Existing Joint Use Pole
- Proposed Joint Use Pole
- Power Manhole — P
- Power Line Tower
- Power Transformer
- U/G Power Cable Hand Hole — HH
- H-Frame Pole
- Recorded U/G Power Line — P
- Designated U/G Power Line (S.U.E.*) — P

TELEPHONE:

- Existing Telephone Pole
- Proposed Telephone Pole
- Telephone Manhole — T
- Telephone Booth
- Telephone Pedestal — T
- Telephone Cell Tower
- U/G Telephone Cable Hand Hole — HH
- Recorded U/G Telephone Cable — T
- Designated U/G Telephone Cable (S.U.E.*) — T
- Recorded U/G Telephone Conduit — TC
- Designated U/G Telephone Conduit (S.U.E.*) — TC
- Recorded U/G Fiber Optics Cable — T FO
- Designated U/G Fiber Optics Cable (S.U.E.*) — T FO

WATER:

- Water Manhole — W
- Water Meter
- Water Valve
- Water Hydrant
- Recorded U/G Water Line — W
- Designated U/G Water Line (S.U.E.*) — W
- Above Ground Water Line — A/G Water

TV:

- TV Satellite Dish
- TV Pedestal — C
- TV Tower
- U/G TV Cable Hand Hole — HH
- Recorded U/G TV Cable — TV
- Designated U/G TV Cable (S.U.E.*) — TV
- Recorded U/G Fiber Optic Cable — TV FO
- Designated U/G Fiber Optic Cable (S.U.E.*) — TV FO

GAS:

- Gas Valve
- Gas Meter
- Recorded U/G Gas Line — G
- Designated U/G Gas Line (S.U.E.*) — G
- Above Ground Gas Line — A/G Gas

SANITARY SEWER:

- Sanitary Sewer Manhole
- Sanitary Sewer Cleanout
- U/G Sanitary Sewer Line — SS
- Above Ground Sanitary Sewer — A/G Sanitary Sewer
- Recorded SS Forced Main Line — FSS
- Designated SS Forced Main Line (S.U.E.*) — FSS

MISCELLANEOUS:

- Utility Pole
- Utility Pole with Base
- Utility Located Object
- Utility Traffic Signal Box — S
- Utility Unknown U/G Line — P/U
- U/G Tank; Water, Gas, Oil
- A/G Tank; Water, Gas, Oil
- U/G Test Hole (S.U.E.*)
- Abandoned According to Utility Records — AATUR
- End of Information — E.O.I.

PROJECT REFERENCE NO.	SHEET NO.
SR-5001AZ	2

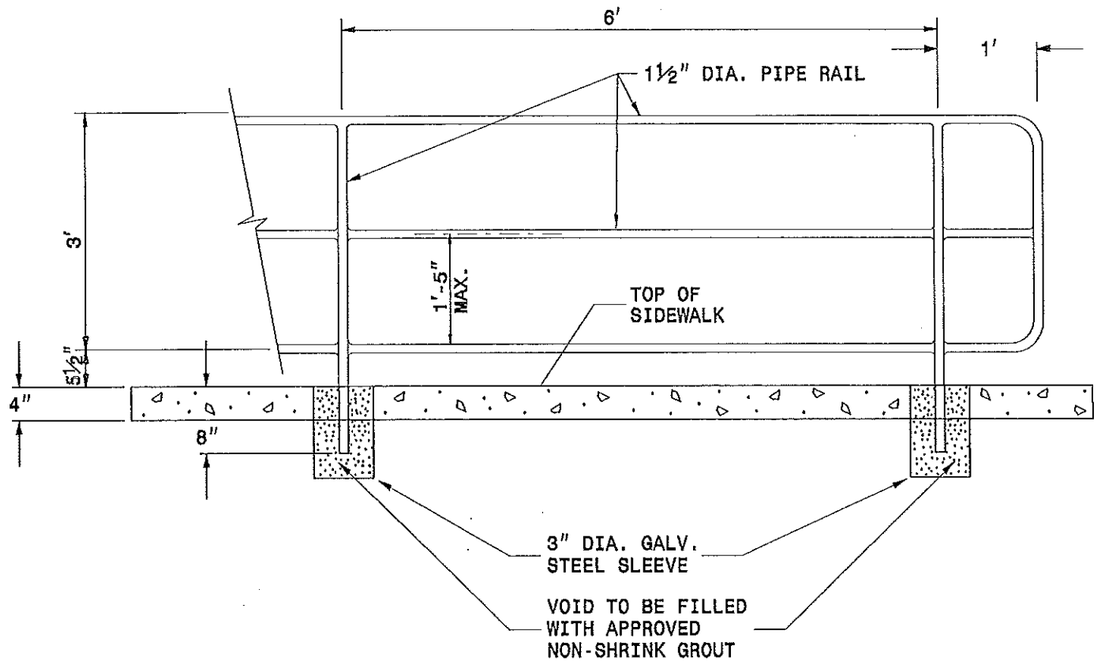

ELEVATION OF PROPOSED PEDESTRIAN HANDRAIL

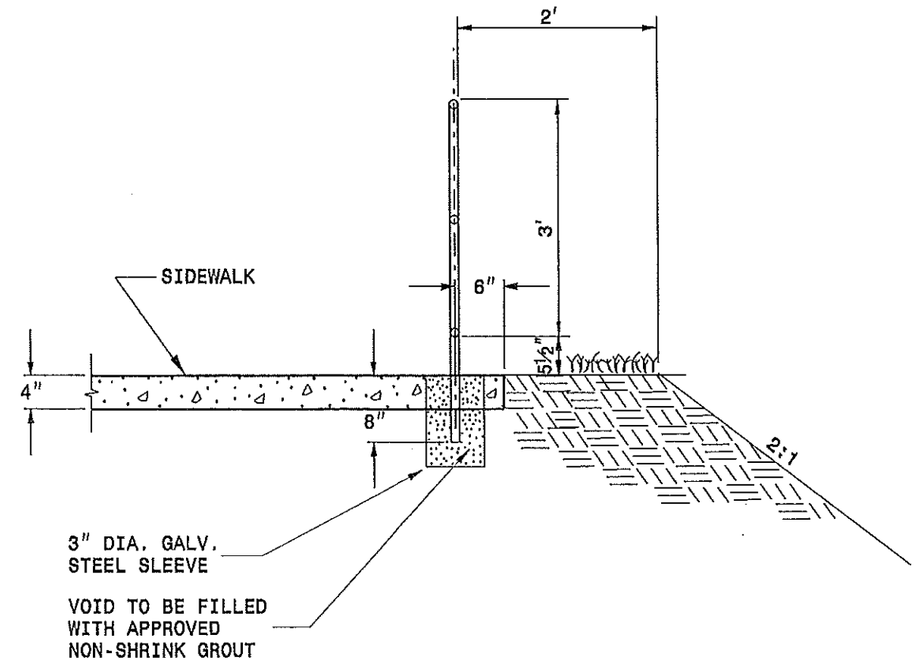

SECTION VIEW

NOTES:

CONSTRUCT PROPOSED STEEL PIPE RAIL OF 1½" DIAMETER SCHEDULE 40 PLAIN END STEEL PIPE MEETING THE REQUIREMENTS OF ASTM A53.

PAINT IN ACCORDANCE WITH SECTION 1080 OF THE STANDARD SPECIFICATIONS.

WELD IN ACCORDANCE WITH ARTICLE 1072-20 OF THE STANDARD SPECIFICATIONS.

PROPOSED PEDESTRIAN SAFETY RAIL

PROJECT REFERENCE NO.	SHEET NO.
SR-5001AZ	2-A.
R/W SHEET NO.	
ROADWAY DESIGN ENGINEER	HYDRAULICS ENGINEER

WATTLE WITH POLYACRYLAMIDE (PAM) DETAIL

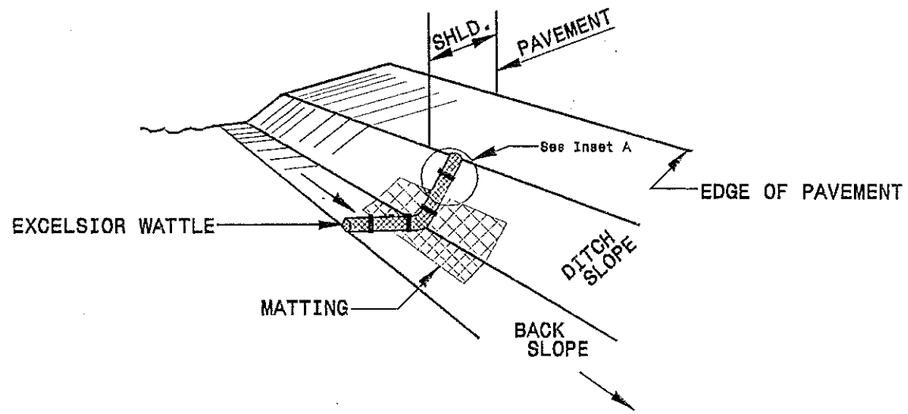

ISOMETRIC VIEW

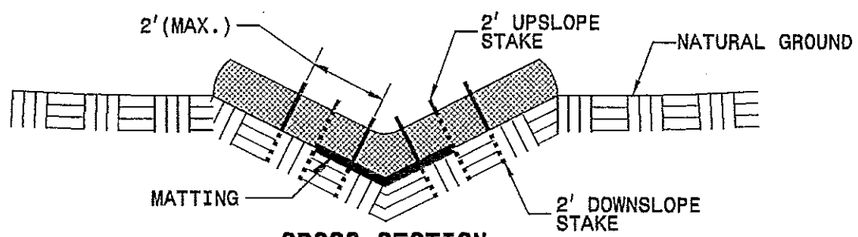

CROSS SECTION VEE DITCH

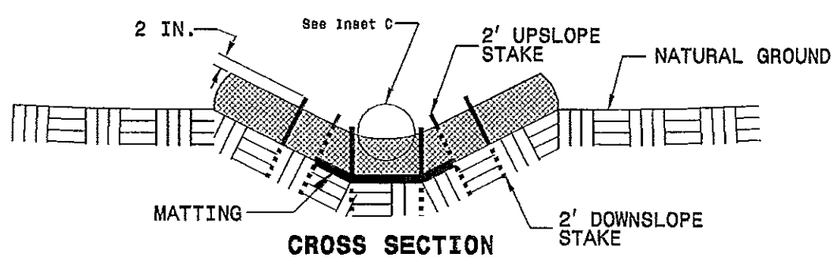

CROSS SECTION TRAPEZOIDAL DITCH

NOTES:

USE MINIMUM 12 IN. DIAMETER EXCELSIOR WATTLE.

USE 2 FT. WOODEN STAKES WITH A 2 IN. BY 2 IN. NOMINAL CROSS SECTION.

ONLY INSTALL WATTLE(S) TO A HEIGHT IN DITCH SO FLOW WILL NOT WASH AROUND WATTLE AND SCOUR DITCH SLOPES AND AS DIRECTED.

INSTALL A MINIMUM OF 2 UPSLOPE STAKES AND 4 DOWNSLOPE STAKES AT AN ANGLE TO WEDGE WATTLE TO BOTTOM OF DITCH.

PROVIDE STAPLES MADE OF 0.125 IN. DIAMETER STEEL WIRE FORMED INTO A U SHAPE NOT LESS THAN 12" IN LENGTH.

INSTALL STAPLES APPROXIMATELY EVERY 1 LINEAR FOOT ON BOTH SIDES OF WATTLE AND AT EACH END TO SECURE IT TO THE SOIL.

INSTALL MATTING IN ACCORDANCE WITH SECTION 1631 OF THE STANDARD SPECIFICATIONS.

PRIOR TO POLYACRYLAMIDE (PAM) APPLICATION, OBTAIN A SOIL SAMPLE FROM PROJECT LOCATION, AND FROM OFFSITE MATERIAL, AND ANALYZE FOR APPROPRIATE PAM FLOCCULANT TO BE APPLIED TO EACH WATTLE.

INITIALLY APPLY 2 OUNCES OF ANIONIC OR NEUTRALLY CHARGED PAM OVER WATTLE WHERE WATER WILL FLOW AND 1 OUNCE OF PAM ON MATTING ON EACH SIDE OF WATTLE. REAPPLY PAM AFTER EVERY RAINFALL EVENT THAT IS EQUAL TO OR EXCEEDS 0.50 IN.

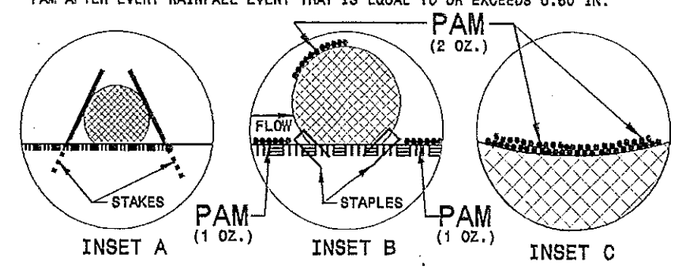

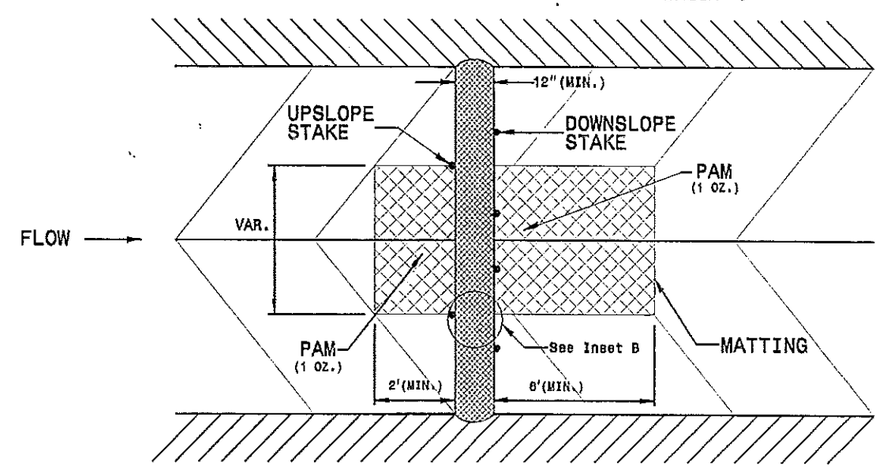

TOP VIEW

STATE OF NORTH CAROLINA
DIVISION OF HIGHWAYS
ROADWAY SUMMARY OF QUANTITIES FOR CONTRACT - SR-5001AZ

Item Number	Sec #	Quantity	Unit	Description
0000100000-N	800	1	LS	MOBILIZATION
0043000000-N	226	1	LS	GRADING
4405000000-E	1110	96	SF	WORK ZONE SIGNS (PORTABLE)
4400000000-E	1110	96	SF	WORK ZONE SIGNS (STATIONARY)
4455000000-N	1150	30	MD	FLAGGER
2815000000-N	858	1	EA	ADJUSTMENT OF DROP INLETS
2354200000-N	840	1	EA	FRAME WITH GRATE, STD. 840.24
6012000000-E	1610	10	TON	SEDIMENT CONTROL STONE
6042000000-E	1632	20	LF	¼" HARDWARE CLOTH
2591000000-E	848	604	SY	4" CONCRETE SIDEWALK
2605000000-N	848	2	EA	CONCRETE WHEELCHAIR RAMPS
	SP	180	LF	THREE BAR PEDESTRIAN HANDRAIL
8834000000-N	SP	20	EA	GENERIC RETAINING WALL ITEM (8'x4'x3' GABION BASKETS)
6084000000-E	1660	0.5	ACR	SEEDING & MULCHING
6071010000-E	SP	40	LF	WATTLE
6071020000-E	SP	1	LB	POLYACRYLAMIDE (PAM)
6015000000-E	1615	0.25	ACR	TEMPORARY MULCHING
6036000000-E	1631	500	SY	MATTING FOR EROSION CONTROL
6000000000-E	1605	300	LF	TEMPORARY SILT FENCE
4820000000-E	1205	44	LF	PAINT PAVEMENT MARKING LINES (8")

PROJECT REFERENCE NO.	SHEET NO.
SR-5001AZ	4

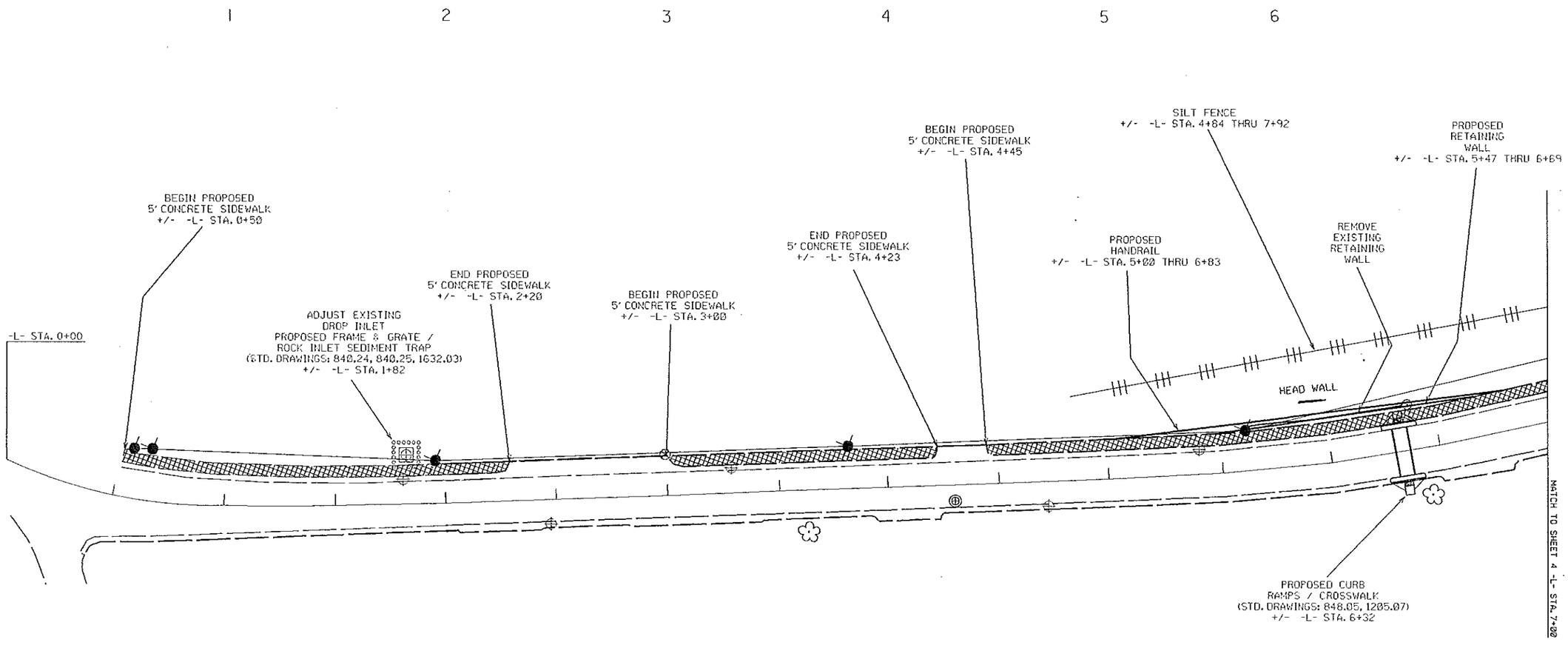

PROJECT REFERENCE NO.	SHEET NO.
SR-5001AZ	5
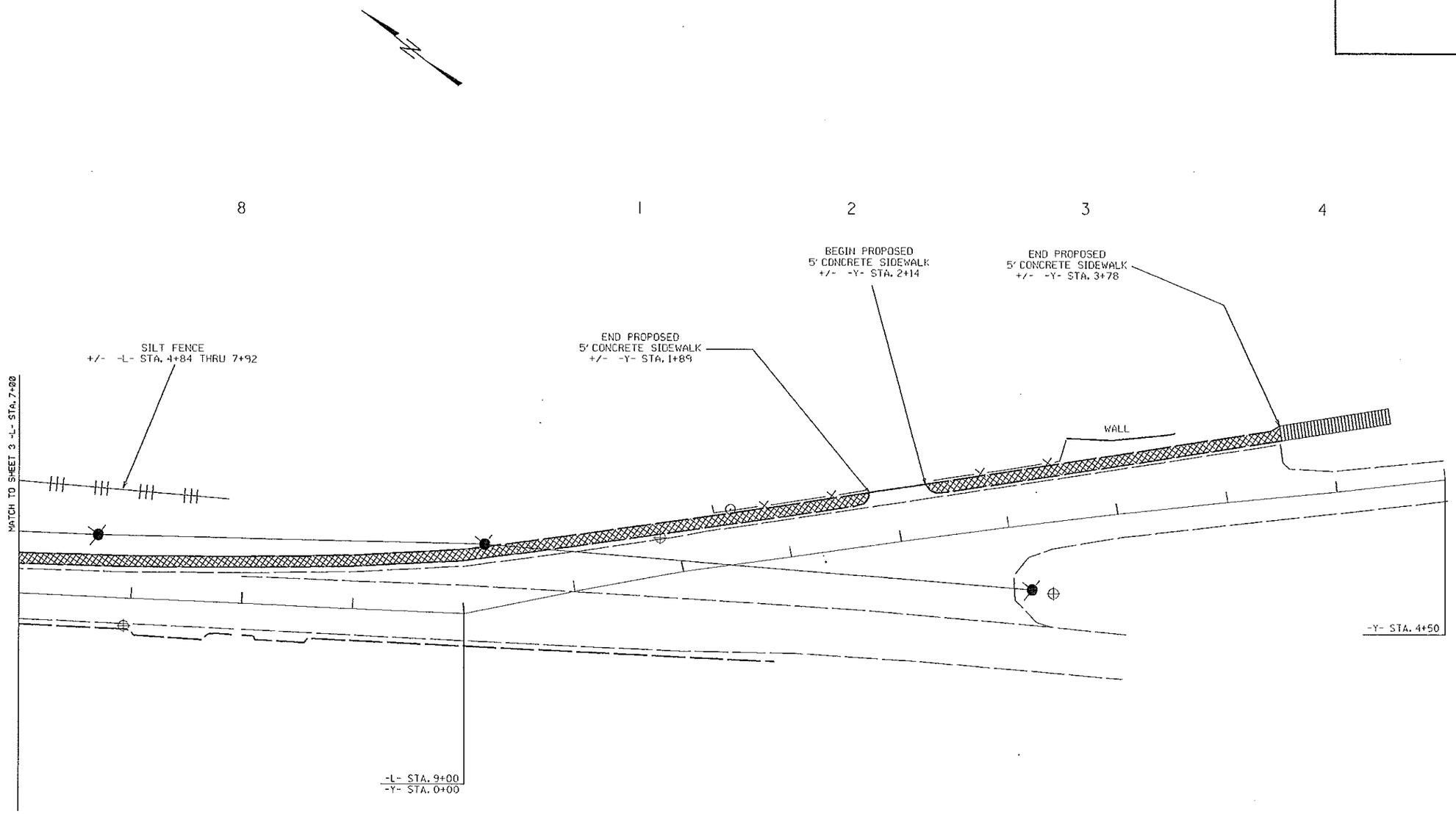
8 1 2 3 4