This electronic collection of documents is provided for the convenience of the user and is Not a Certified Document –

The documents contained herein were originally issued and sealed by the individuals whose names and license numbers appear on each page, on the dates appearing with their signature on that page.
This file or an individual page shall not be considered a certified document.

DocuSign Envelope ID: A87BB1CC-193C-453E-B835-A1C31CA4A2E0

09/08/99

TIP PROJECT: B-4792

CONTRACT: DN004489

See Sheet 1A For Index of Sheets
See Sheet 1B For Conventional Symbols
See Sheet 1C-1 For Survey Control Sheets

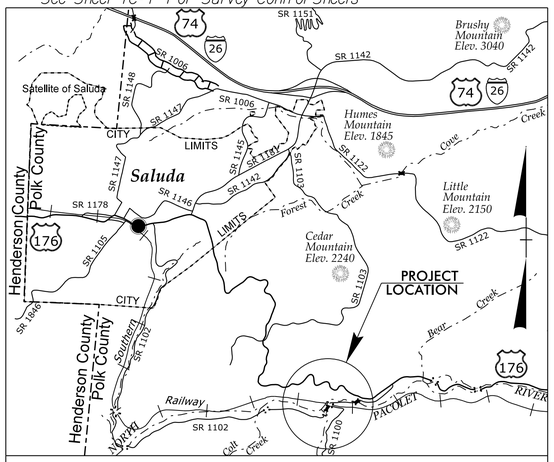

VICINITY MAP

STATE OF NORTH CAROLINA
DIVISION OF HIGHWAYS

POLK COUNTY

STATE	STATE PROJECT REFERENCE NO.	SHEET NO.	TOTAL SHEETS
N.C.	B-4792	1	

STATE PROJ. NO.	F. A. PROJ. NO.	DESCRIPTION
38562.1.1	BRZ-1102(5)	PE
38562.2.1	BRZ-1102(5)	ROW /UTL.
38562.3.1	BRZ-1102(5)	CONSTR.

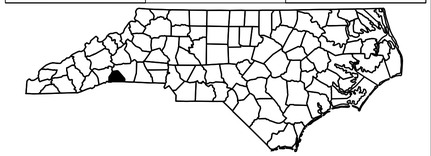

LOCATION: BRIDGE No. 4 OVER FORK CREEK (SMALL BRANCH OF PACOLET RIVER) ON SR 1102

TYPE OF WORK: GRADING, PAVING, DRAINAGE, CULVERT

NAD 83/NSRS 2007

BEGIN TIP PROJECT No. B-4792
-L- PC Sta. 9+99.74

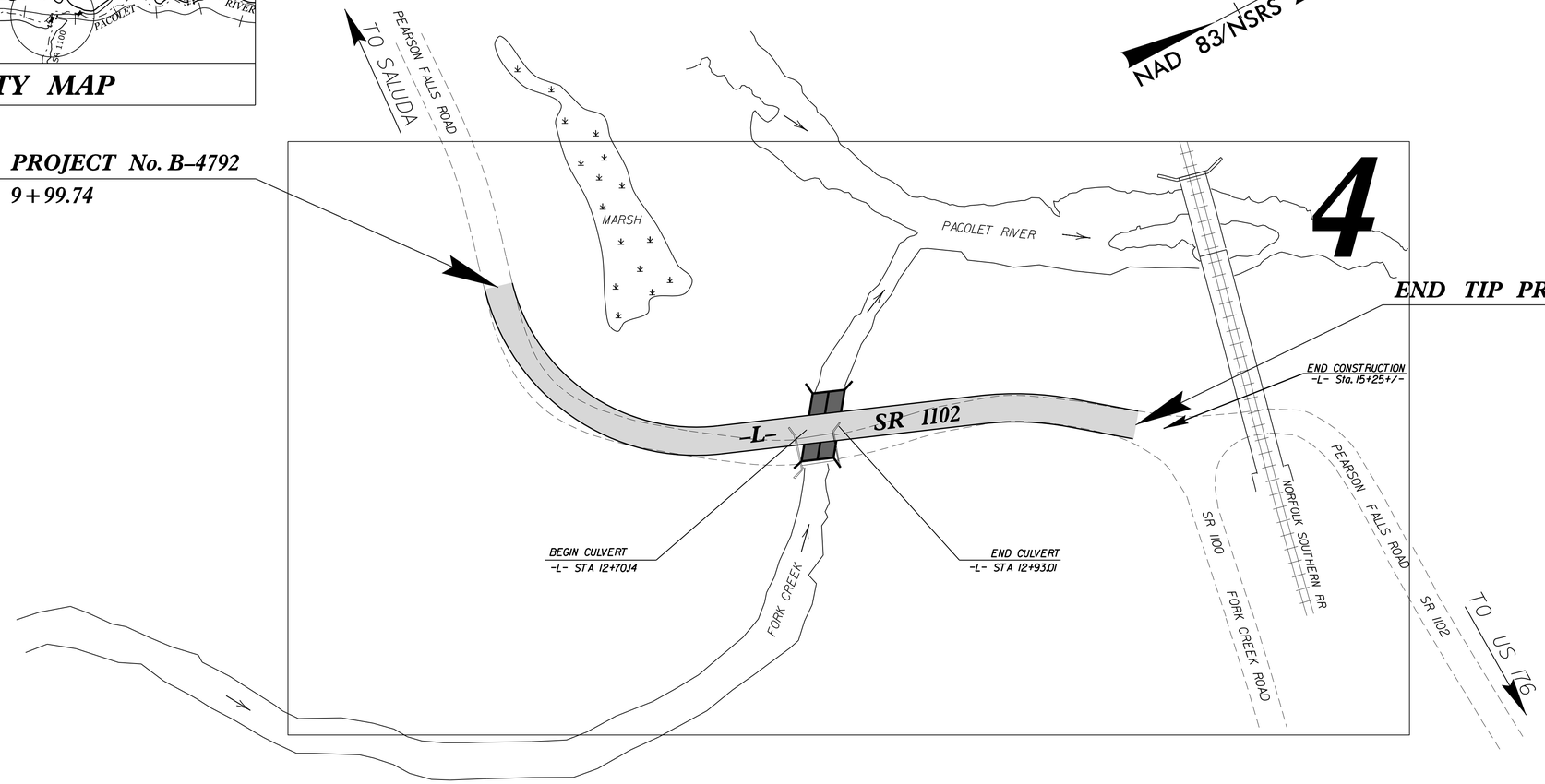

THIS IS NOT A CONTROL OF ACCESS PROJECT

GRAPHIC SCALES

50 25 0 50 100
PLANS

50 25 0 50 100
PROFILE (HORIZONTAL)

10 5 0 10 20
PROFILE (VERTICAL)

DESIGN DATA

ADT 2014 = 100
ADT 2035 = 200
K = 25 %
D = 55 %
T = 19 % *
V = 25 MPH
* TTST =1% DUAL 18%

FUNC CLASS = LOCAL

SUBREGIONAL TIER

PROJECT LENGTH

LENGTH ROADWAY T.I.P. PROJECT B-4792	=	0.092 MI
LENGTH STRUCTURE T.I.P. PROJECT B-4792	=	0.004 MI
TOTAL LENGTH T.I.P. PROJECT B-4792	=	0.096 MI

Prepared in the Office of:
DIVISION OF HIGHWAYS
1000 Birch Ridge Dr., Raleigh NC, 27610

2012 STANDARD SPECIFICATIONS

RIGHT OF WAY DATE:
APRIL 21, 2015

LETTING DATE:
MAY 10, 2016

KEVIN E. MOORE, PE
PROJECT ENGINEER

STEVEN D. KENDALL, PE
PROJECT DESIGN ENGINEER

HYDRAULICS ENGINEER

DocuSigned by: Stephen R. Morgan 1029E41E3FC1415... 4/4/2016
SIGNATURE: *P.E.*
NORTH CAROLINA PROFESSIONAL SEAL 022100 ENGINEER STEPHEN R. MORGAN

ROADWAY DESIGN ENGINEER

DocuSigned by: Steven D. Kendall C919CB49D9EE4A2... 4/4/2016
SIGNATURE: *P.E.*
NORTH CAROLINA PROFESSIONAL SEAL 033296 ENGINEER Steven D. Kendall

STATE OF NORTH CAROLINA DEPARTMENT OF TRANSPORTATION

28-MAR-2016 07:11
R:\Roadway\Proj\B4792_Rdy_tsn.dgn
$$$$USERNAME$$$$

DocuSign Envelope ID: A87BB1CC-193C-453E-B835-A1C31CA4A2E0

8/17/99

PROJECT REFERENCE NO.	SHEET NO.
B-4792	1A

ROADWAY DESIGN ENGINEER

NORTH CAROLINA PROFESSIONAL SEAL 033296 ENGINEER Steven D. Kendall 4/4/2016

INDEX OF SHEETS

SHEET NUMBER	SHEET
1	TITLE SHEET
1-A	INDEX OF SHEETS, GENERAL NOTES, AND LIST OF STANDARD DRAWINGS
1-B	CONVENTIONAL SYMBOLS
2A-1 THRU 2A-2	PAVEMENT SCHEDULE, TYPICAL SECTIONS, AND WEDGING DETAILS
2C-1	MODIFIED SHOULDER BERM GUTTER DETAIL
2G-1 THRU 2G-4	TEMPORARY SHORING DETAILS
3	SUMMARY OF QUANTITIES
3B-1 THRU 3B-2	SUMMARY OF DRAINAGE QUANTITIES SUMMARY OF GUARDRAIL, EARTHWORK SUMMARY, ASPHALT PAVEMENT REMOVAL SUMMARY, SUMMARY OF SUBSURFACE DRAINAGE, SHOULDER BERM GUTTER SUMMARY, SUMMARY OF AGGREGATE SUBGRADE/STABILIZATION AND SUMMARY OF MILLING
4	PLAN SHEET
	PROFILE SHEET
TMP-1 THRU TMP-9	TRANSPORTATION MANAGEMENT PLANS
PMP-1	PAVEMENT MARKING PLANS
EC-1 THRU EC-6	EROSION CONTROL PLANS
RF-1	REFORESTATION PLANS
SIGN-1	SIGNING PLANS
UO-1 THRU UO-2	UTILITIES BY OTHERS PLANS
X1A	CROSS-SECTION TITLE SHEET
X-2 THRU X-11	CROSS-SECTIONS
C-1 THRU C-13	CULVERT PLANS

GENERAL NOTES:

2012 SPECIFICATIONS
EFFECTIVE: 01-17-2012
REVISED: 10-31-2014

GRADING AND SURFACING OR RESURFACING AND WIDENING:

THE GRADE LINES SHOWN DENOTE THE FINISHED ELEVATION OF THE PROPOSED SURFACING AT GRADE POINTS SHOWN ON THE TYPICAL SECTIONS. WHERE NO GRADE LINES ARE SHOWN, THE PROFILES SHOWN DENOTE THE TOP ELEVATION OF THE EXISTING PAVEMENT ALONG THE CENTER LINE OF SURVEY ON WHICH THE PROPOSED RESURFACING WILL BE PLACED. GRADE LINES MAY BE ADJUSTED BY THE ENGINEER IN ORDER TO SECURE A PROPER TIE-IN.

CLEARING:

CLEARING ON THIS PROJECT SHALL BE PERFORMED TO THE LIMITS ESTABLISHED BY METHOD II.

SUPERELEVATION:

ALL CURVES ON THIS PROJECT SHALL BE SUPERELEVATED IN ACCORDANCE WITH STD. NO. 225.04 USING THE RATE OF SUPERELEVATION AND RUNOFF SHOWN ON THE PLANS. SUPERELEVATION IS TO BE REVOLVED ABOUT THE GRADE POINTS SHOWN ON THE TYPICAL SECTIONS.

SHOULDER CONSTRUCTION:

ASPHALT, EARTH, AND CONCRETE SHOULDER CONSTRUCTION ON THE HIGH SIDE OF SUPERELEVATED CURVES SHALL BE IN ACCORDANCE WITH STD. NO. 560.01

UNDERDRAINS:

UNDERDRAINS SHALL BE CONSTRUCTED IN ACCORDANCE WITH STD. NO. 815.03 AT LOCATIONS DIRECTED BY THE ENGINEER.

GUARDRAIL:

THE GUARDRAIL LOCATIONS SHOWN ON THE PLANS MAY BE ADJUSTED DURING CONSTRUCTION AS DIRECTED BY THE ENGINEER. THE CONTRACTOR SHOULD CONSULT WITH THE ENGINEER PRIOR TO ORDERING GUARDRAIL MATERIAL.

TEMPORARY SHORING:

SHORING REQUIRED FOR THE MAINTENANCE OF TRAFFIC NOT SHOWN ON THE PLANS WILL BE PAID FOR AT THE CONTRACT PRICE FOR "TEMPORARY SHORING".

UTILITIES:

UTILITY OWNERS ON THIS PROJECT ARE Duke Power (Aerial) and

RiverStreet Networks, formerly TDS Telecom (Under and above

ground telephone lines)

ANY RELOCATION OF EXISTING UTILITIES WILL BE ACCOMPLISHED BY OTHERS.

RIGHT-OF-WAY MARKERS:

ALL RIGHT-OF-WAY MARKERS ON THIS PROJECT SHALL BE PLACED BY CONTRACT IN ACCORDANCE WITH SECTION 801 OF THE 2012 NORTH CAROLINA STANDARD SPECIFICATIONS FOR ROADS AND STRUCTURES.

EFF. 01-17-2012
REV. 10-30-2012

2012 ROADWAY ENGLISH STANDARD DRAWINGS

The following Roadway Standards as appear in "Roadway Standard Drawings" Highway Design Branch - N. C. Department of Transportation - Raleigh, N. C., Dated January, 2012 are applicable to this project and by reference hereby are considered a part of these plans:

STD.NO.	TITLE
DIVISION 2 - EARTHWORK	
200.02	Method of Clearing - Method II
225.02	Guide for Grading Subgrade - Secondary and Local
225.04	Method of Obtaining Superelevation - Two Lane Pavement
DIVISION 3 - PIPE CULVERTS	
300.01	Method of Pipe Installation
310.10	Driveway Pipe Construction
DIVISION 5 - SUBGRADE, BASES AND SHOULDERS	
560.01	Method of Shoulder Construction - High Side of Superelevated Curve - Method I
DIVISION 6 - ASPHALT BASES AND PAVEMENTS	
654.01	Pavement Repairs
DIVISION 8 - INCIDENTALS	
815.03	Pipe Underdrain and Blind Drain
840.29	Frames and Narrow Slot Flat Grates
840.35	Traffic Bearing Grated Drop Inlet - for Cast Iron Double Frame and Grates
840.46	Traffic Bearing Precast Drainage Structure
840.66	Drainage Structure Steps
846.01	Concrete Curb, Gutter and Curb & Gutter
846.04	Drop Inlet Installation in Shoulder Berm Gutter
862.01	Guardrail Placement
862.02	Guardrail Installation
876.02	Guide for Rip Rap at Pipe Outlets

09-NOV-2015 15:39
R:\Roadway\Proj\B4792_Rdy_tsh.dgn
$$$$USERNAME$$$$

DocuSign Envelope ID: A87BB1CC-193C-453E-B835-A1C31CA4A2E0

12/05/11

PROJECT REFERENCE NO.	SHEET NO.
B-4792	1B

Note: Not to Scale

****S.U.E. = Subsurface Utility Engineering***

STATE OF NORTH CAROLINA
DIVISION OF HIGHWAYS

CONVENTIONAL PLAN SHEET SYMBOLS

BOUNDARIES AND PROPERTY:

- State Line
- County Line
- Township Line
- City Line
- Reservation Line
- Property Line
- Existing Iron Pin — EIP
- Property Corner
- Property Monument — ECM
- Parcel/Sequence Number — 123
- Existing Fence Line
- Proposed Woven Wire Fence
- Proposed Chain Link Fence
- Proposed Barbed Wire Fence
- Existing Wetland Boundary — WLB
- Proposed Wetland Boundary — WLB
- Existing Endangered Animal Boundary — EAB
- Existing Endangered Plant Boundary — EPB
- Known Soil Contamination: Area or Site
- Potential Soil Contamination: Area or Site

BUILDINGS AND OTHER CULTURE:

- Gas Pump Vent or U/G Tank Cap
- Sign — S
- Well — W
- Small Mine
- Foundation
- Area Outline
- Cemetery
- Building
- School
- Church
- Dam

HYDROLOGY:

- Stream or Body of Water
- Hydro, Pool or Reservoir
- Jurisdictional Stream — JS
- Buffer Zone 1 — BZ 1
- Buffer Zone 2 — BZ 2
- Flow Arrow
- Disappearing Stream
- Spring
- Wetland
- Proposed Lateral, Tail, Head Ditch — FLOW
- False Sump

RAILROADS:

- Standard Gauge — CSX TRANSPORTATION
- RR Signal Milepost — MILEPOST 35
- Switch — SWITCH
- RR Abandoned
- RR Dismantled

RIGHT OF WAY:

- Baseline Control Point
- Existing Right of Way Marker
- Existing Right of Way Line
- Proposed Right of Way Line — RW
- Proposed Right of Way Line with Iron Pin and Cap Marker — RW
- Proposed Right of Way Line with Concrete or Granite R/W Marker — RW
- Proposed Control of Access Line with Concrete C/A Marker — CA
- Existing Control of Access — CA
- Proposed Control of Access — CA
- Existing Easement Line — E
- Proposed Temporary Construction Easement — E
- Proposed Temporary Drainage Easement — TDE
- Proposed Permanent Drainage Easement — PDE
- Proposed Permanent Drainage / Utility Easement — DUE
- Proposed Permanent Utility Easement — PUE
- Proposed Temporary Utility Easement — TUE
- Proposed Aerial Utility Easement — AUE
- Proposed Permanent Easement with Iron Pin and Cap Marker

ROADS AND RELATED FEATURES:

- Existing Edge of Pavement
- Existing Curb
- Proposed Slope Stakes Cut — C
- Proposed Slope Stakes Fill — F
- Proposed Curb Ramp — CR
- Existing Metal Guardrail
- Proposed Guardrail
- Existing Cable Guiderail
- Proposed Cable Guiderail
- Equality Symbol
- Pavement Removal

VEGETATION:

- Single Tree
- Single Shrub
- Hedge
- Woods Line
- Orchard
- Vineyard — Vineyard

EXISTING STRUCTURES:

MAJOR:

- Bridge, Tunnel or Box Culvert — CONC
- Bridge Wing Wall, Head Wall and End Wall — CONC WW

MINOR:

- Head and End Wall — CONC HW
- Pipe Culvert
- Footbridge
- Drainage Box: Catch Basin, DI or JB — CB
- Paved Ditch Gutter
- Storm Sewer Manhole — S
- Storm Sewer — S

UTILITIES:

POWER:

- Existing Power Pole
- Proposed Power Pole
- Existing Joint Use Pole
- Proposed Joint Use Pole
- Power Manhole — P
- Power Line Tower
- Power Transformer
- U/G Power Cable Hand Hole
- H-Frame Pole
- Recorded U/G Power Line — P
- Designated U/G Power Line (S.U.E.*) — P

TELEPHONE:

- Existing Telephone Pole
- Proposed Telephone Pole
- Telephone Manhole — T
- Telephone Booth
- Telephone Pedestal — T
- Telephone Cell Tower
- U/G Telephone Cable Hand Hole — HH
- Recorded U/G Telephone Cable — T
- Designated U/G Telephone Cable (S.U.E.*) — T
- Recorded U/G Telephone Conduit — TC
- Designated U/G Telephone Conduit (S.U.E.*) — TC
- Recorded U/G Fiber Optics Cable — T FO
- Designated U/G Fiber Optics Cable (S.U.E.*) — T FO

WATER:

- Water Manhole — W
- Water Meter
- Water Valve
- Water Hydrant
- Recorded U/G Water Line — W
- Designated U/G Water Line (S.U.E.*) — W
- Above Ground Water Line — A/G Water

TV:

- TV Satellite Dish
- TV Pedestal — C
- TV Tower
- U/G TV Cable Hand Hole — HH
- Recorded U/G TV Cable — TV
- Designated U/G TV Cable (S.U.E.*) — TV
- Recorded U/G Fiber Optic Cable — TV FO
- Designated U/G Fiber Optic Cable (S.U.E.*) — TV FO

GAS:

- Gas Valve
- Gas Meter
- Recorded U/G Gas Line — G
- Designated U/G Gas Line (S.U.E.*) — G
- Above Ground Gas Line — A/G Gas

SANITARY SEWER:

- Sanitary Sewer Manhole
- Sanitary Sewer Cleanout
- U/G Sanitary Sewer Line — SS
- Above Ground Sanitary Sewer — A/G Sanitary Sewer
- Recorded SS Forced Main Line — FSS
- Designated SS Forced Main Line (S.U.E.*) — FSS

MISCELLANEOUS:

- Utility Pole
- Utility Pole with Base
- Utility Located Object
- Utility Traffic Signal Box — S
- Utility Unknown U/G Line — ?UTL
- U/G Tank; Water, Gas, Oil
- Underground Storage Tank, Approx. Loc. — UST
- A/G Tank; Water, Gas, Oil
- Geoenvironmental Boring
- U/G Test Hole (S.U.E.*)
- Abandoned According to Utility Records — AATUR
- End of Information — E.O.I.

DocuSign Envelope ID: A87BB1CC-193C-453E-B835-A1C31CA4A2E0

6/2/99

PROJECT REFERENCE NO.	SHEET NO.
38562.1.1	1C-1
Location and Surveys	

SURVEY CONTROL SHEET B-4792
-PRELIMINARY-

-PRELIMINARY- ROW MARKER IRON PIN AND CAP-E

ALIGN	STATION	OFFSET	NORTH	EAST
L	09+99.74	-14.00	551192.4158	1006783.1377
L	09+99.74	-50.00	551227.3178	1006791.9612
L	12+07.83	-50.00	551284.1686	1006902.5212
L	13+94.26	-50.00	551457.7596	1006970.5158
L	13+94.26	-28.44	551449.8970	1006990.5910
L	13+00.00	43.65	551335.8374	1007023.3374
L	13+00.00	55.00	551331.6979	1007033.9056
L	12+50.00	55.00	551285.1420	1007015.6699
L	12+50.00	43.41	551289.3690	1007004.8783

PRELIMINARY -L-

TYPE	STATION	NORTH	EAST
POT	9+51.71	551190.6118	1006733.1464
PC	09+99.74	551178.8427	1006779.7069
PT	12+07.83	551265.9329	1006949.0772
PC	13+94.26	551439.5239	1007017.0717
PT	14+58.58	551495.0441	1007049.0758
PC	15+03.88	551530.4812	1007077.2958
PT	15+66.31	551584.5464	1007107.9963
POT	15+94.40	551610.8346	1007117.9023

BL

POINT	DESC.	NORTH	EAST	ELEVATION	L STATION	OFFSET
1	BL-1	551229.6990	1006515.5930	1492.95	OUTSIDE PROJECT LIMITS	
2	BL-2	551157.9010	1006850.3830	1492.78	10+66.63	20.40 RT
3	BL-3	551302.2220	1006990.7000	1484.16	12+56.80	25.52 RT
4	BL-4	551569.0970	1007082.5790	1473.50	15+40.67	16.83 LT
5	BL-5	551665.5710	1007178.5510	1472.68	OUTSIDE PROJECT LIMITS	

BY1

POINT	DESC.	NORTH	EAST	ELEVATION	EY1 STATION	OFFSET
44	BY1-44	551569.0970	1007082.5790	1473.50	OUTSIDE PROJECT LIMITS	
6	BY1-6	551491.2410	1007373.9170	1484.34	OUTSIDE PROJECT LIMITS	

BY2

POINT	DESC.	NORTH	EAST	ELEVATION	EY2 STATION	OFFSET
7	BY2-7	551696.6960	1006814.1250	1491.46	OUTSIDE PROJECT LIMITS	
8	BY2-8	551561.4110	1007248.2320	1486.07	13+51.54	17.20 RT

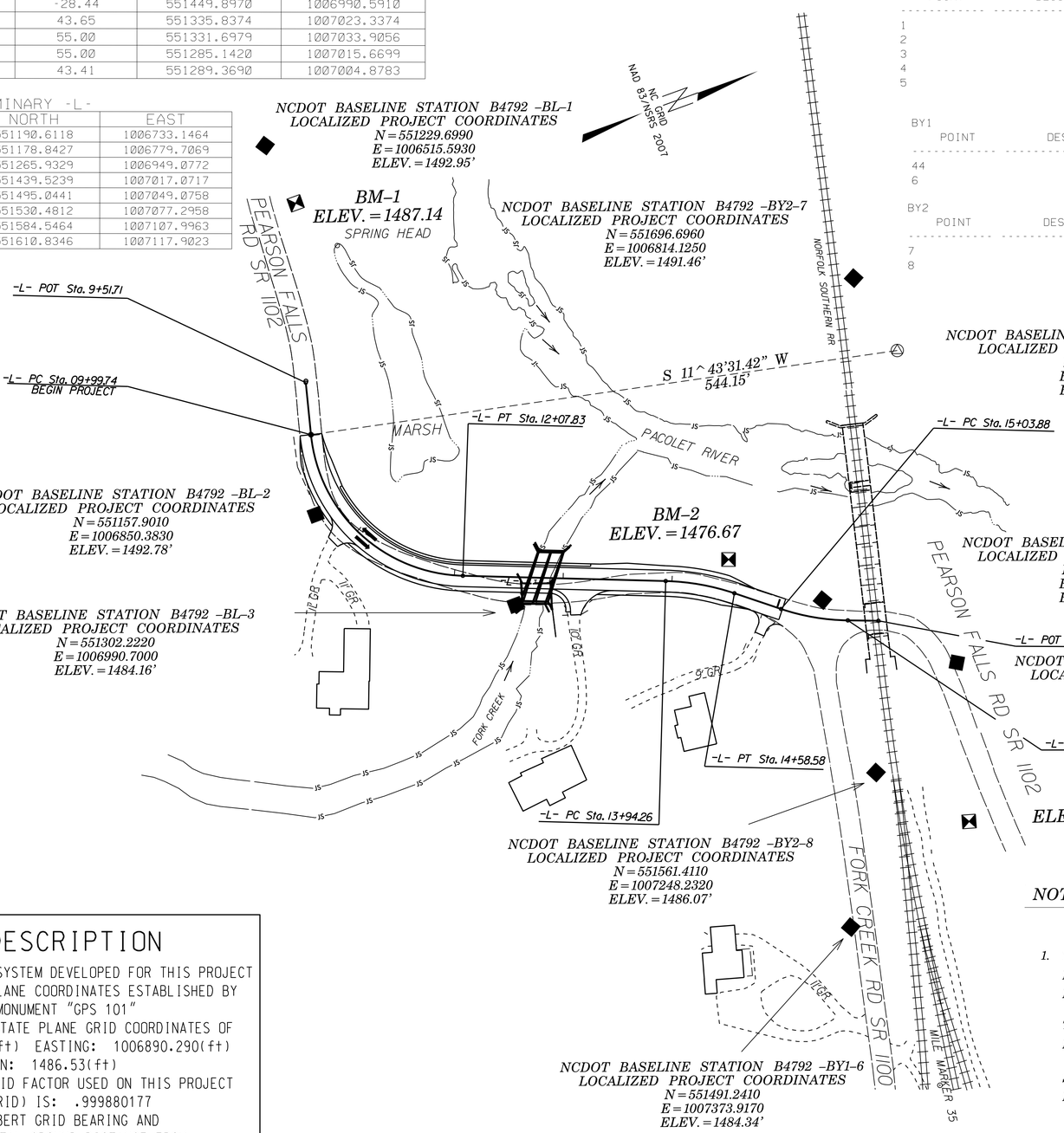


```
*****************************************
BM1       ELEVATION = 1487.14
N 551238      E 1006575
BL STATION 5+56.00 21 LEFT
SPIKE SET IN BASE OF 24" SYCAMORE TREE
*****************************************

*****************************************
BM2       ELEVATION = 1476.67
N 551501      E 1007018
BL STATION 12+40.00 39 LEFT
SPIKE SET IN BASE OF 24" POPLAR TREE
*****************************************

*****************************************
BM3       ELEVATION = 1475.75
N 551626      E 1007320
BY1 STATION 7+14.00  117  LEFT
SPIKE SET IN BASE OF 3 PRONG SYCAMORE
TREE
*****************************************
```

-PRELIMINARY- ROW MARKER PERMANENT EASEMENT-E

ALIGN	STATION	OFFSET	NORTH	EAST
L	11+59.00	-50.00	551257.0084	1006886.1347
L	11+92.00	-80.00	551288.7144	1006871.6678
L	13+94.26	-50.00	551457.7596	1006970.5158
L	14+05.00	-80.00	551482.2832	1006948.2975
L	14+42.00	-29.72	551498.3528	1007014.6515

DATUM DESCRIPTION

THE LOCALIZED COORDINATE SYSTEM DEVELOPED FOR THIS PROJECT IS BASED ON THE STATE PLANE COORDINATES ESTABLISHED BY NCDOT FOR MONUMENT "GPS 101"
WITH NAD 83/NSRS 2007 STATE PLANE GRID COORDINATES OF
NORTHING: 551711.633(ft) EASTING: 1006890.290(ft)
ELEVATION: 1486.53(ft)
THE AVERAGE COMBINED GRID FACTOR USED ON THIS PROJECT (GROUND TO GRID) IS: .999880177
THE N.C. LAMBERT GRID BEARING AND LOCALIZED HORIZONTAL GROUND DISTANCE FROM "GPS 101" TO -L- L STATION 09+99.74 IS
S 11 43 31.42 W 544.15'
ALL LINEAR DIMENSIONS ARE LOCALIZED HORIZONTAL DISTANCES
VERTICAL DATUM USED IS NAVD 88

NOTES:

1. THE CONTROL DATA FOR THIS PROJECT CAN BE FOUND ELECTRONICALLY BY SELECTING PROJECT CONTROL DATA AT:
HTTPS://CONNECT.NCDOT.GOV/RESOURCES/LOCATION/

THE FILES TO BE FOUND ARE AS FOLLOWS:
B4792_LS_CONTROL.TXT

SITE CALIBRATION INFORMATION HAS NOT BEEN PROVIDED FOR THIS PROJECT. IF FURTHER INFORMATION IS NEEDED, PLEASE CONTACT THE LOCATION AND SURVEYS UNIT.

△ INDICATES GEODETIC CONTROL MONUMENTS USED OR SET FOR HORIZONTAL PROJECT CONTROL BY THE NCDOT LOCATION AND SURVEYS UNIT.
PROJECT CONTROL ESTABLISHED USING GLOBAL POSITIONING SYSTEM.

GEOID MODEL: GEOID 03
NOTE: DRAWING NOT TO SCALE

01-SEP-2015 14:48
R:\Roadway\Proj\B4792_ls_lc-1.dgn
$$$$USERNAME$$$$

DocuSign Envelope ID: A87BB1CC-193C-453E-B835-A1C31CA4A2E0

6/2/99

PROJECT REFERENCE NO.	SHEET NO.
B-4792	2A-1
ROADWAY DESIGN ENGINEER	PAVEMENT DESIGN ENGINEER

NORTH CAROLINA PROFESSIONAL SEAL 033296 ENGINEER Steven D. Kendall — 4/4/2016

NORTH CAROLINA PROFESSIONAL SEAL 022826 ENGINEER Mark S. Morrison — 4/4/2016

PAVEMENT SCHEDULE

C1	PROP. APPROX. 2.5″ ASPHALT CONCRETE SURFACE COURSE, TYPE SF9.5A, AT AN AVERAGE RATE OF 137.5 LBS. PER SQ. YD. IN EACH OF TWO LAYERS.	R2	PORTABLE CONCRETE BARRIER
C2	PROP. VAR. DEPTH ASPHALT CONCRETE SURFACE COURSE, TYPE SF9.5A, AT AN AVERAGE RATE OF 110 LBS. PER SQ. YD. PER 1″ DEPTH. TO BE PLACED IN LAYERS NOT TO EXCEED 1½″ IN DEPTH.	T	EARTH MATERIAL.
E1	PROP. APPROX. 4″ ASPHALT CONCRETE BASE COURSE, TYPE B25.0B, AT AN AVERAGE RATE OF 456 LBS. PER SQ. YD.	U	EXISTING PAVEMENT.
E2	PROP. VAR. DEPTH ASPHALT CONCRETE BASE COURSE, TYPE B25.0B, AT AN AVERAGE RATE OF 114 LBS. PER SQ. YD. PER 1″ DEPTH. TO BE PLACED IN LAYERS NOT LESS THAN 3″ IN DEPTH OR GREATER THAN 5½″ IN DEPTH.	W	WEDGING
R1	MODIFIED SHOULDER BERM GUTTER		

NOTE: PAVEMENT EDGE SLOPES ARE 1:1 UNLESS SHOWN OTHERWISE.

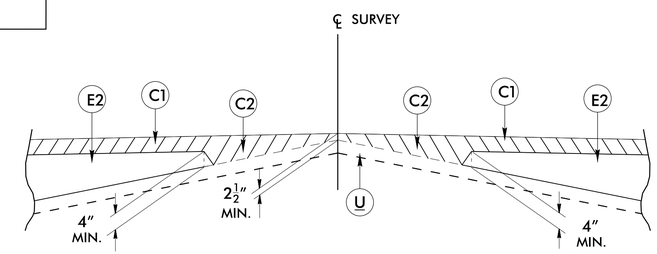

Wedging Detail

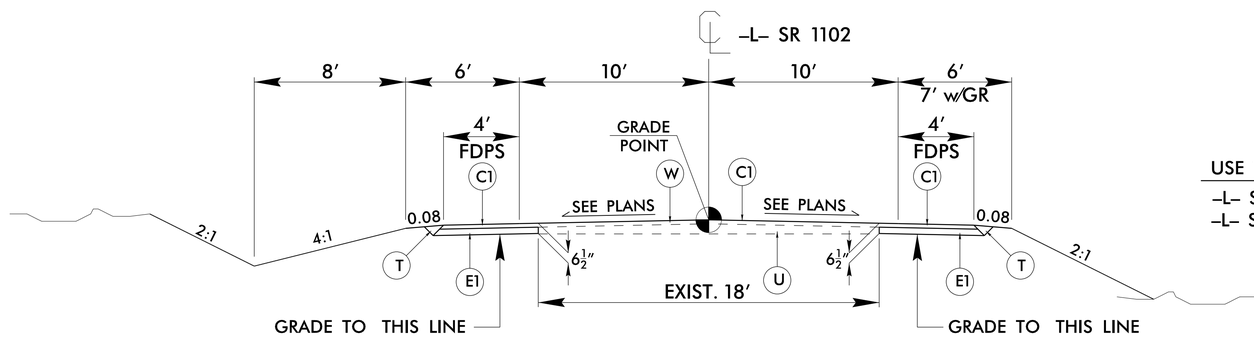

TYPICAL SECTION NO. 1

USE TYPICAL SECTION NO. 1

–L– STA. 9+99.74 TO 10+56.00
–L– STA. 14+50.00 TO 15+05.00

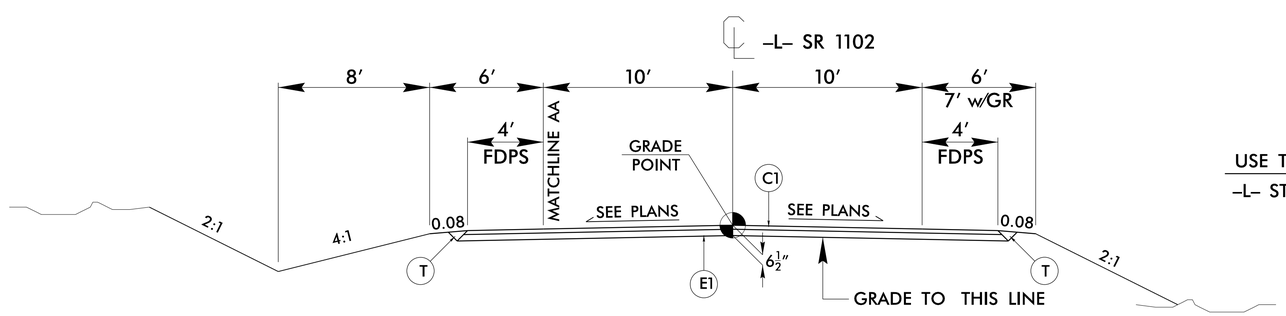

TYPICAL SECTION NO. 2

USE TYPICAL SECTION NO. 2

–L– STA. 10+56.00 TO 14+50.00

INSET A

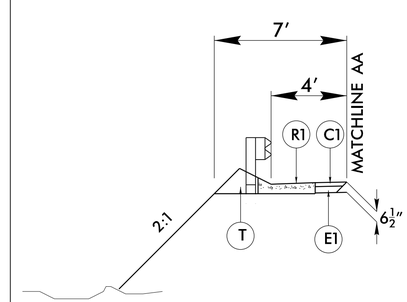

USE INSET A IN CONJUNCTION WITH TYPICAL SECTION No. 2

–L– STA. 10+56.00 TO 13+25.00 LEFT

04-APR-2016 09:22
$$$$USERNAME$$$$

DocuSign Envelope ID: A87BB1CC-193C-453E-B835-A1C31CA4A2E0

PHASING FOR CULVERT CONSTRUCTION

PROJECT REFERENCE NO.	SHEET NO.
B-4792	2A-2

ROADWAY DESIGN ENGINEER: NORTH CAROLINA PROFESSIONAL SEAL 03329 ENGINEER Steven D. Kendall — 4/4/2016

PAVEMENT DESIGN ENGINEER: NORTH CAROLINA PROFESSIONAL SEAL 019281 ENGINEER Mark S. Morrison — 4/4/2016

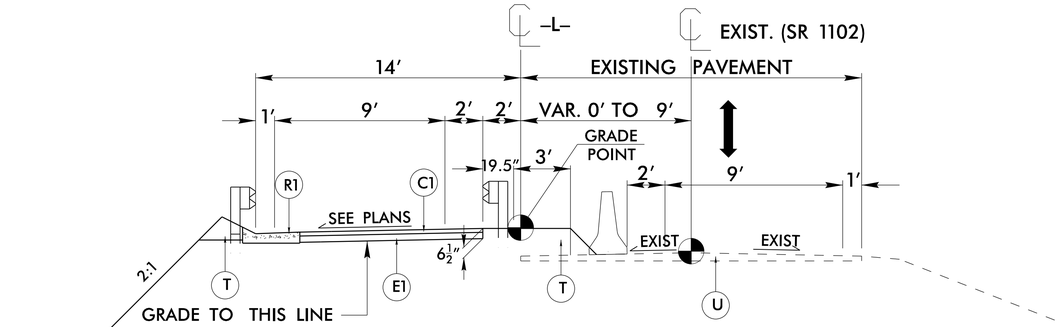

TYPICAL SECTION PHASE I

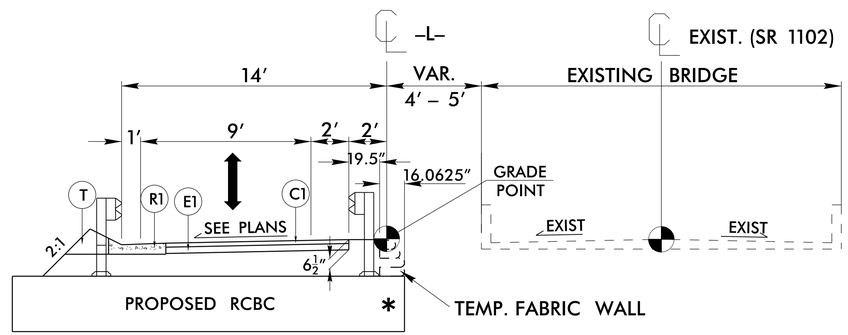

TYPICAL SECTION PHASE II

* CONSTRUCTION JOINT
SEE CULVERT PLANS

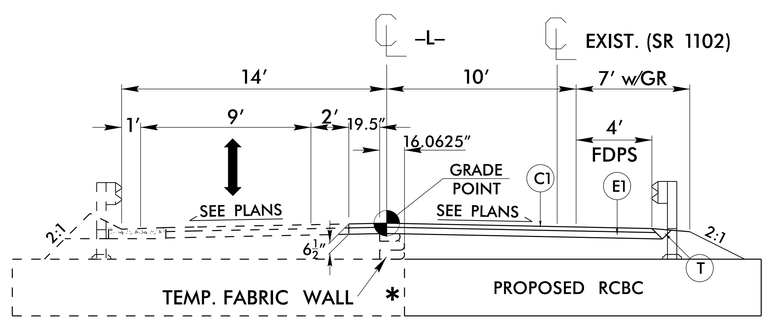

TYPICAL SECTION PHASE III

* CONSTRUCTION JOINT
SEE CULVERT PLANS

PHASE I

- SHIFT TRAFFIC INTO ONE-LANE PATTERN ON NB LANE
- CONSTRUCT SOUTHBOUND LANE

PHASE II

- CONSTRUCT CULVERT (PHASE I)
- SHIFT TRAFFIC INTO ONE-LANE PATTERN ON SB LANE
- REMOVE EXISTING STRUCTURE

PHASE III

- CONSTRUCT CULVERT (PHASE II)
- CONSTRUCT NORTHBOUND LANE
- SEE SHEET 2 FOR FINAL TYPICAL

PAVEMENT SCHEDULE	
C1	2.5″ SF9.5A
C2	VAR. SF9.5A
E1	4″ B25.0B
E2	VAR. B25.0B
R1	MODIFIED SBG
R2	CONC. BARRIER
T	EARTH MATERIAL
U	EXIST. PAVEMENT
W	WEDGING

6/2/99
04-APR-2016 09:35
V:\ATR\B4792\B-4792_Polk\Correspondence and Communication\Submittals\D-008 100% Plans Package\02_To NCDOT\Plans\Electronic Files\B4792\Roadway\Proj\B-4792_Rdy_typ.dgn
$$$$USERNAME$$$$

DocuSign Envelope ID: A87BB1CC-193C-453E-B835-A1C31CA4A2E0

PROJECT REFERENCE NO.	SHEET NO.
B-4792	2C-1

STATE OF NORTH CAROLINA
DEPT. OF TRANSPORTATION
DIVISION OF HIGHWAYS
RALEIGH, N.C.

ENGLISH DETAIL DRAWING FOR
MODIFIED SHOULDER BERM GUTTER

MODIFIED SHOULDER BERM GUTTER

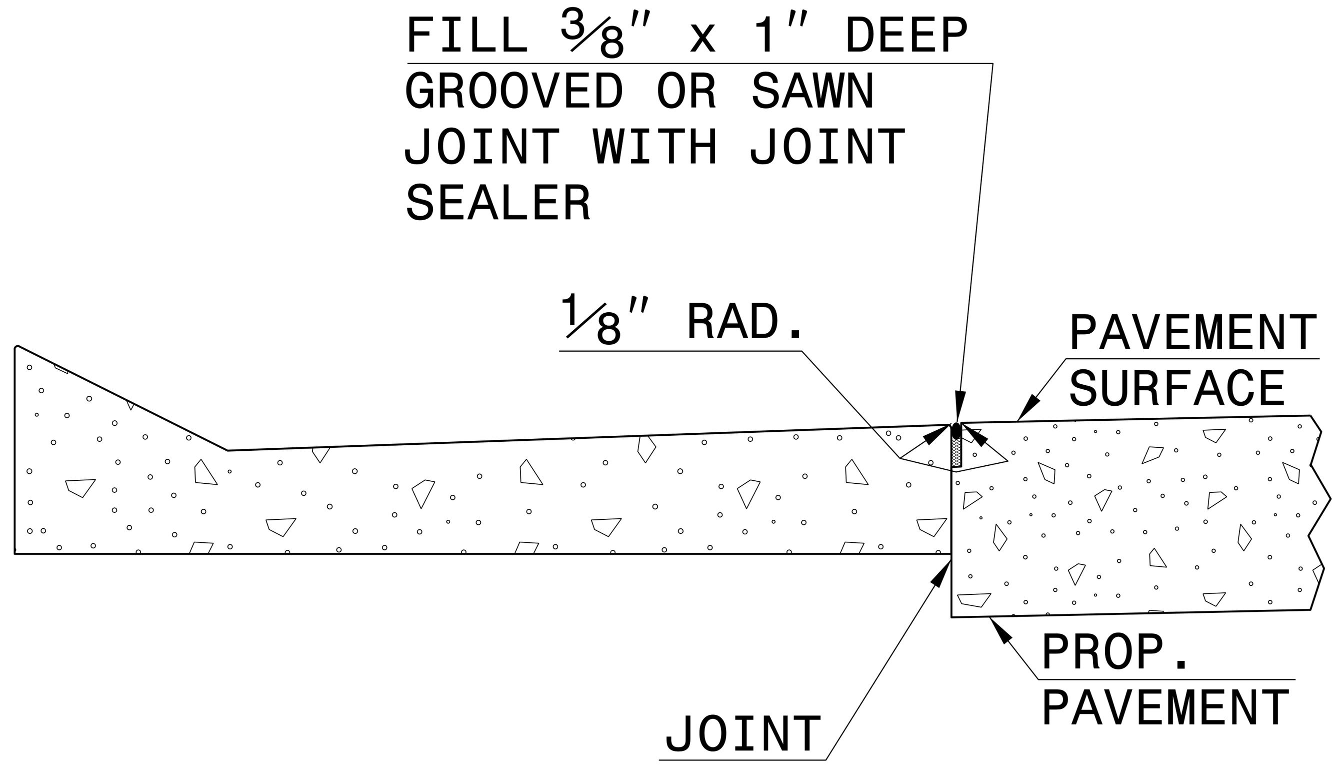

LONGITUDINAL JOINT

GENERAL NOTES:
- PLACE CONTRACTION JOINTS AT 10′ INTERVALS, EXCEPT THAT A 15′ SPACING MAY BE USED WHEN A MACHINE IS USED OR WHEN SATISFACTORY SUPPORT FOR THE FACE FORM CAN BE OBTAINED WITHOUT THE USE OF TEMPLATES AT 10′ INTERVALS.
- JOINT SPACING MAY BE ALTERED IF REQUIRED BY THE ENGINEER.
- CONTRACTION JOINTS MAY BE INSTALLED WITH THE USE OF TEMPLATES OR FORMED BY OTHER APPROVED METHODS. CONSTRUCT NON-TEMPLATE FORMED JOINTS A MIN. OF 1½″ DEEP.
- FILL ALL CONSTRUCTION JOINTS WITH JOINT FILLER AND SEALER.
- SPACE EXPANSION JOINTS AT 90′ INTERVALS AND ADJACENT TO ALL RIGID OBJECTS.

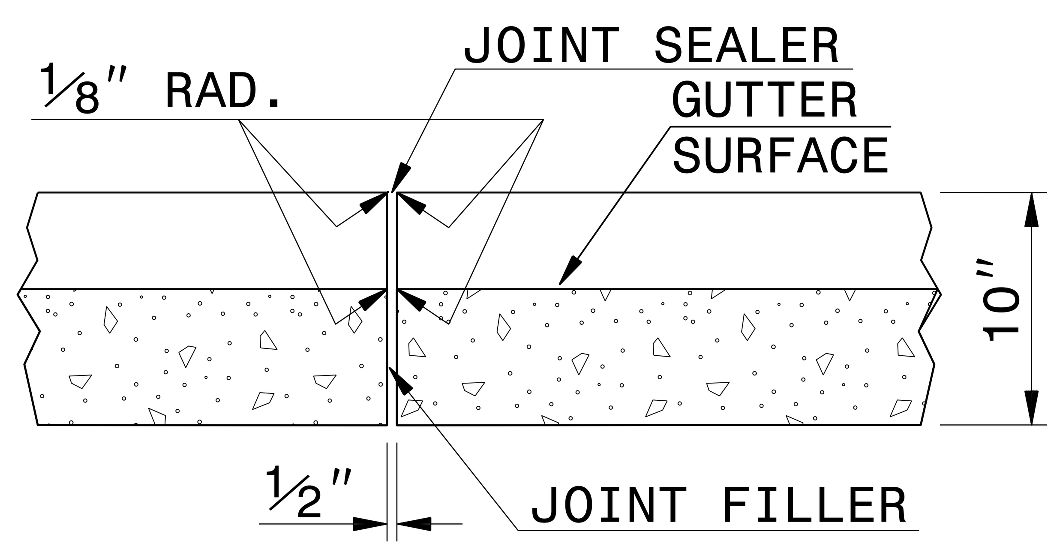

TRANSVERSE EXPANSION JOINT IN CURB AND GUTTER

SECTION VIEW OF JOINTS

SHEET OF
846D01

STATE OF NORTH CAROLINA
DEPT. OF TRANSPORTATION
DIVISION OF HIGHWAYS
RALEIGH, N.C.

ENGLISH DETAIL DRAWING FOR
MODIFIED SHOULDER BERM GUTTER

SHEET OF
846D01

SEAL 022964 ENGINEER
4/4/2016

DOCUMENT NOT CONSIDERED FINAL UNLESS ALL SIGNATURES COMPLETED

CONTRACT STANDARDS AND DEVELOPMENT UNIT
Office 919-707-6950 FAX 919-250-4119

SEE TITLE BLOCK

ORIGINAL BY: kkempf DATE: 11/13/08
MODIFIED BY: DATE:
CHECKED BY: DATE:
FILE SPEC.: special details/kkempf/english/117x79 tbdi.dgn

DocuSign Envelope ID: A87BB1CC-193C-453E-B835-A1C31CA4A2E0

PROJECT REFERENCE NO.	SHEET NO.
B-4792	2G-1

GEOTECHNICAL ENGINEER

NORTH CAROLINA PROFESSIONAL SEAL 02246 ENGINEER SCOTT A. HIDDEN

DocuSigned by: Scott A. Hidden F760CAEB96FC4D3... 11/9/2015

SIGNATURE DATE

ENGINEER

SIGNATURE DATE

GROUNDWATER CONDITION (SEE NOTE 6)	H SHORING HEIGHT (FT)	SLOPE OR SURCHARGE CASE WITH NO TRAFFIC IMPACT					SURCHARGE CASE WITH TRAFFIC IMPACT				
		SHEET PILES		H-PILES WITH TIMBER LAGGING			SHEET PILES		H-PILES WITH TIMBER LAGGING		
		MINIMUM REQUIRED EMBEDMENT (FT)	MINIMUM REQUIRED SECTION MODULUS (IN^3/FT)	MINIMUM REQUIRED EMBEDMENT* (FT) (SEE NOTE 10)			MINIMUM REQUIRED EMBEDMENT (FT)	MINIMUM REQUIRED SECTION MODULUS (IN^3/FT)	MINIMUM REQUIRED EMBEDMENT* (FT) (SEE NOTE 10)		
				HP 10x42	HP 12x53	HP 14x73			HP 10x42	HP 12x53	HP 14x73
GROUNDWATER ELEVATION BEWTEEN BOTTOM OF SHORING AND PILE TIP	< 6	11.5	4.5	11.5	11.5	11.5	16.0	12.0	13.0	13.0	13.0
	7	13.0	7.0	13.0	13.0	13.0	17.0	14.5	14.5	14.5	14.5
	8	15.0	10.0	--	15.0	15.0	18.0	17.0	--	15.5	15.5
	9	17.0	14.0	--	17.0	17.0	19.0	20.0	--	17.0	17.0
	10	18.5	19.5	--	--	18.5	20.0	23.5	--	--	18.5
	11	20.5	26.0	--	--	--	21.0	28.0	--	--	20.0
	12	22.5	33.0	--	--	--	22.0	33.0	--	--	21.5
GROUNDWATER ELEVATION BELOW PILE TIP	< 6	7.5	3.0	8.0	8.0	8.0	11.0	10.0	9.5	9.5	9.5
	7	8.5	4.5	9.5	9.5	9.5	12.0	12.0	10.5	10.5	10.5
	8	10.0	6.5	10.5	10.5	10.5	12.5	14.0	11.5	11.5	11.5
	9	11.0	9.5	--	12.0	12.0	13.5	16.5	--	12.5	12.5
	10	12.5	13.0	--	--	13.5	14.0	19.5	--	13.5	13.5
	11	13.5	17.0	--	--	14.5	15.0	22.5	--	--	14.5
	12	15.0	21.5	--	--	16.0	16.0	25.5	--	--	15.5

MINIMUM REQUIRED EMBEDMENT AND SECTION MODULUS

*DO NOT USE H-PILES WITH TIMBER LAGGING FOR GROUNDWATER CONDITION, SHORING HEIGHT AND H-PILE SIZE SHOWN IF MINIMUM REQUIRED EMBEDMENT IS "--".

NOTES:

1. AT THE CONTRACTOR'S OPTION, USE STANDARD TEMPORARY SHORING AS NOTED IN THE PLANS.
2. FOR STANDARD TEMPORARY SHORING, SEE STANDARD SHORING PROVISION.
3. STANDARD TEMPORARY SHORING IS BASED ON THE FOLLOWING IN-SITU ASSUMED SOIL PARAMETERS:
   UNIT WEIGHT, γ = 120 LB/CF
   FRICTION ANGLE, ϕ = 30 DEGREES
   COHESION, c = 0 LB/SF
4. DO NOT USE STANDARD TEMPORARY SHORING IF ASSUMED SOIL PARAMETERS ARE NOT APPLICABLE.
5. DO NOT USE STANDARD TEMPORARY SHORING WHEN VERY LOOSE OR SOFT SOIL OR MUCK IS WITHIN THE EMBEDMENT DEPTH.
6. USE GROUNDWATER ELEVATION NOTED IN THE PLANS. IF NO GROUNDWATER ELEVATION IS SHOWN IN THE PLANS, USE "GROUNDWATER ELEVATION BETWEEN BOTTOM OF SHORING AND PILE TIP" FOR GROUNDWATER CONDITION. DO NOT USE STANDARD TEMPORARY SHORING IF GROUNDWATER IS ABOVE BOTTOM OF SHORING.
7. AT THE CONTRACTOR'S OPTION OR IF AVAILABLE CLEAR DISTANCE IS LESS THAN THE MINIMUM REQUIRED FOR CONCRETE BARRIER, SET BARRIER NEXT TO AND UP AGAINST TRAFFIC SIDE OF PILES AND USE "SURCHARGE CASE WITH TRAFFIC IMPACT".
8. AT THE CONTRACTOR'S OPTION OR IF AVAILABLE CLEAR DISTANCE IS LESS THAN 4' FOR TEMPORARY GUARDRAIL, ATTACH GUARDRAIL TO TRAFFIC SIDE OF PILES AS SHOWN IN THE PLANS AND USE "SURCHARGE CASE WITH TRAFFIC IMPACT".
9. MINIMUM REQUIRED EXTENSION IS 6" FOR "SLOPE OR SURCHARGE CASE WITH NO TRAFFIC IMPACT" AND 32" FOR "SURCHARGE CASE WITH TRAFFIC IMPACT".
10. MINIMUM REQUIRED EMBEDMENT FOR H-PILES WITH TIMBER LAGGING IS BASED ON DRIVEN H-PILES AT MAXIMUM 6' SPACING. AT THE CONTRACTOR'S OPTION, EMBEDMENT DEPTHS MAY BE REDUCED BY 25% FOR DRILLED-IN H-PILES.
11. SUBMIT A "STANDARD TEMPORARY SHORING SELECTION FORM" AT LEAST 7 DAYS BEFORE STARTING TEMPORARY SHORING CONSTRUCTION. UP TO 3 SHORING LOCATIONS MAY BE INCLUDED ON EACH FORM. STANDARD SHORING SELECTION FORMS ARE AVAILABLE FROM: connect.ncdot.gov/resources/Geological/Pages/Geotech_Forms_Details.aspx
12. CONTACT THE ENGINEER IF PILES DO NOT ATTAIN THE MINIMUM REQUIRED EMBEDMENT.

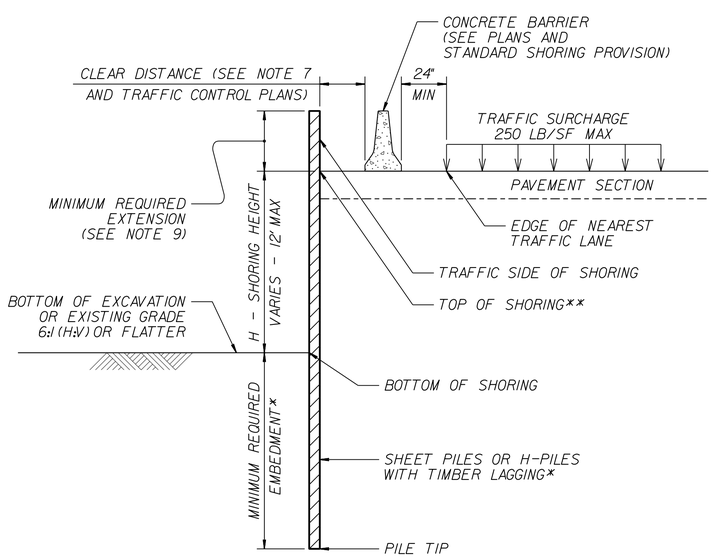

CONCRETE BARRIER

**TOP OF SHORING = EDGE OF PAVEMENT

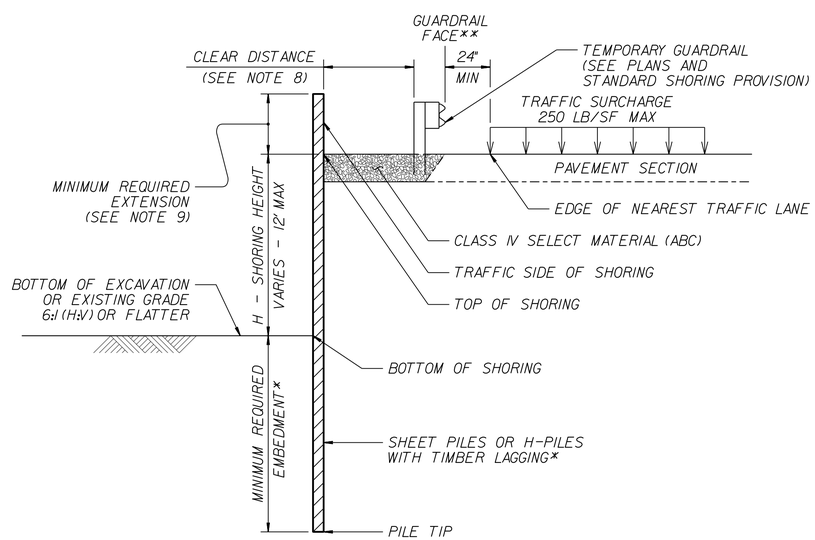

TEMPORARY GUARDRAIL

**GUARDRAIL FACE = EDGE OF PAVEMENT

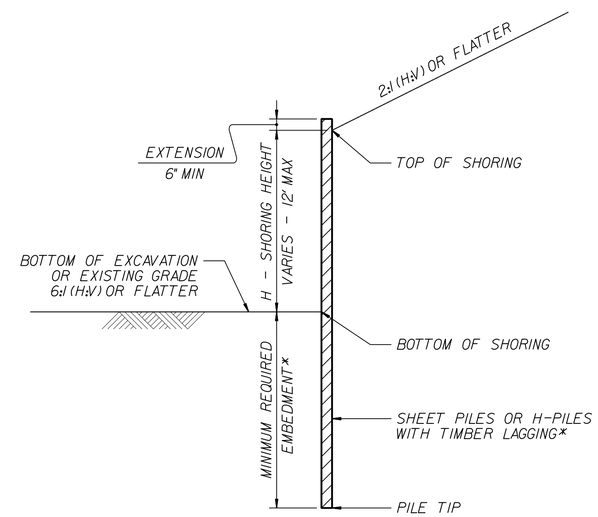

STANDARD TEMPORARY SHORING

(SLOPE CASE)
*SEE TABLE ABOVE.

STANDARD TEMPORARY SHORING

(SURCHARGE CASE)
*SEE TABLE ABOVE.

NORTH CAROLINA DEPARTMENT OF TRANSPORTATION DIVISION OF HIGHWAYS

GEOTECHNICAL ENGINEERING UNIT

STANDARD DETAIL NO. 1801.01

STANDARD TEMPORARY SHORING

DATE: 11-19-13

DocuSign Envelope ID: A87BB1CC-193C-453E-B835-A1C31CA4A2E0

PROJECT REFERENCE NO.	SHEET NO.
B-4792	2G-2

GEOTECHNICAL ENGINEER

NORTH CAROLINA PROFESSIONAL SEAL 022246 ENGINEER SCOTT A. HIDDEN

DocuSigned by: Scott A. Hidden 11/9/2015
F760CAEB96EC4D3...
SIGNATURE DATE

ENGINEER

SIGNATURE DATE

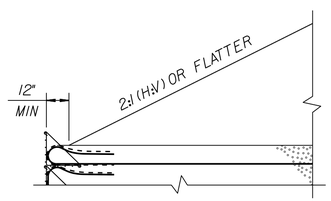

SLOPE CASE

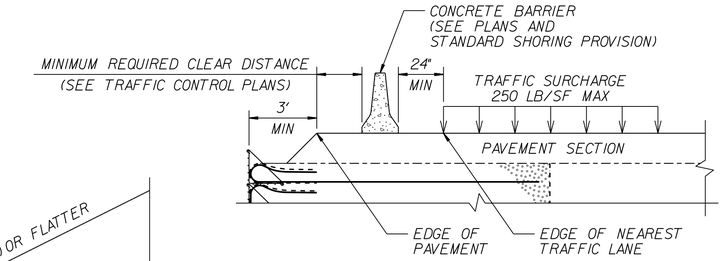

SURCHARGE CASE

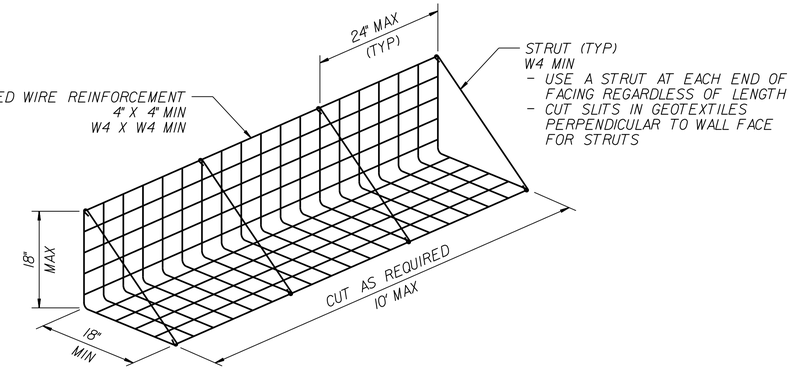

FACING DETAIL

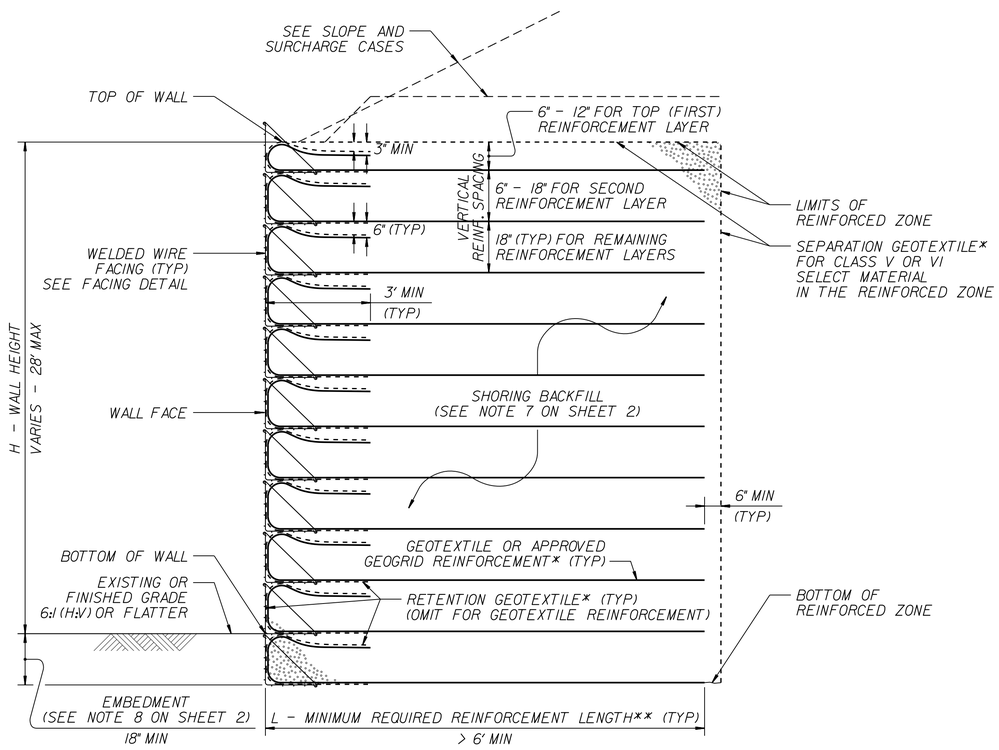

STANDARD TEMPORARY WALL

(FOR STANDARD TEMPORARY WALLS ON STRUCTURES,
SEE TEMPORARY WALL ON STRUCTURE DETAIL ON SHEET 2.)
*SEE GEOSYNTHETIC PLACEMENT DETAILS ON SHEET 2.
**SEE REINFORCEMENT TABLES ON SHEET 3.

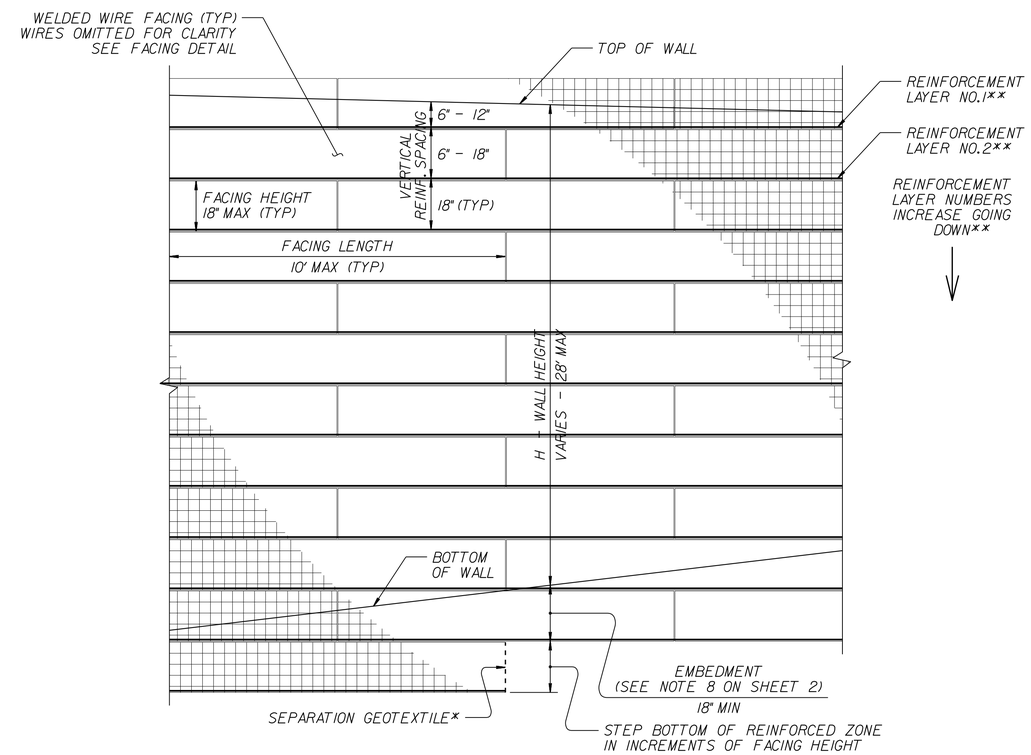

STANDARD TEMPORARY WALL – PARTIAL ELEVATION

*SEE GEOSYNTHETIC PLACEMENT DETAILS ON SHEET 2.
**SEE REINFORCEMENT TABLES ON SHEET 3.

NORTH CAROLINA
DEPARTMENT OF TRANSPORTATION
DIVISION OF HIGHWAYS

GEOTECHNICAL
ENGINEERING UNIT

STANDARD DETAIL NO. 1801.02

STANDARD
TEMPORARY WALL
SHEET 1 0F 3

DATE: 11-19-13

DocuSign Envelope ID: A87BB1CC-193C-453E-B835-A1C31CA4A2E0

PROJECT REFERENCE NO.	SHEET NO.
B-4792	2G-3

GEOTECHNICAL ENGINEER

NORTH CAROLINA PROFESSIONAL SEAL 022246 ENGINEER SCOTT A. HIDDEN

DocuSigned by: Scott A. Hidden F760CAEB96FC4D3... 11/9/2015

SIGNATURE DATE

ENGINEER

SIGNATURE DATE

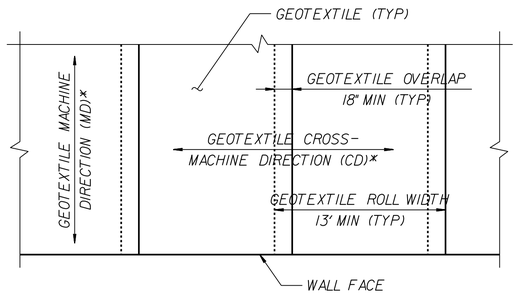

GEOTEXTILE PLACEMENT

(100% COVERAGE MIN FOR GEOTEXTILE REINFORCEMENT)

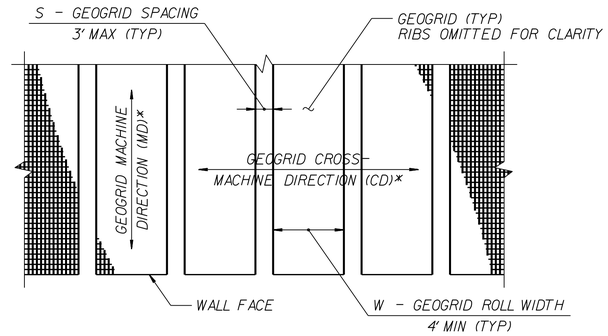

GEOGRID PLACEMENT

(80% COVERAGE MIN FOR GEOGRID REINFORCEMENT – $\frac{W}{W+S} \times 100 \geq 80\%$, SEE NOTE 11)

GEOSYNTHETIC PLACEMENT DETAILS

(PLAN VIEW)

*SEE NOTE 12.

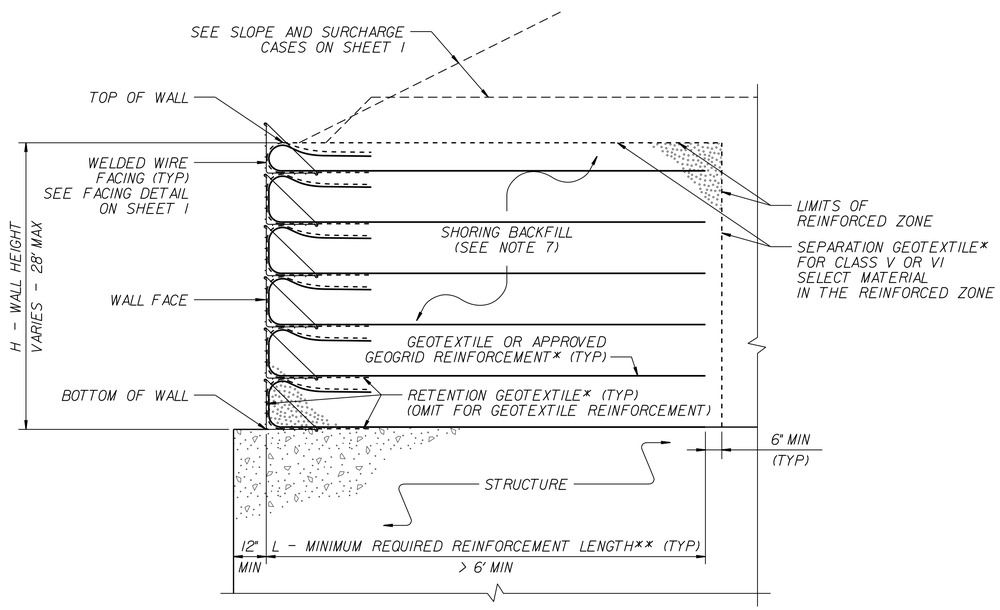

TEMPORARY WALL ON STRUCTURE DETAIL

*SEE GEOSYNTHETIC PLACEMENT DETAILS.

**SEE REINFORCEMENT TABLES ON SHEET 3.

NOTES:

1. AT THE CONTRACTOR'S OPTION, USE STANDARD TEMPORARY WALLS AS NOTED IN THE PLANS.
2. FOR STANDARD TEMPORARY WALLS, SEE STANDARD SHORING PROVISION.
3. STANDARD TEMPORARY WALLS ARE BASED ON THE FOLLOWING IN-SITU ASSUMED SOIL PARAMETERS:
   UNIT WEIGHT, γ = 120 LB/CF
   FRICTION ANGLE, ϕ = 30 DEGREES
   COHESION, c = 0 LB/SF
4. DO NOT USE STANDARD TEMPORARY WALLS IF ASSUMED SOIL PARAMETERS ARE NOT APPLICABLE.
5. DO NOT USE STANDARD TEMPORARY WALLS WHEN VERY LOOSE OR SOFT SOIL OR MUCK IS BELOW TEMPORARY WALLS.
6. USE GROUNDWATER ELEVATION NOTED IN THE PLANS. IF NO GROUNDWATER ELEVATION IS SHOWN IN THE PLANS, ASSUME GROUNDWATER DEPTH IS LESS THAN 7' BELOW BOTTOM OF REINFORCED ZONE. DO NOT USE STANDARD TEMPORARY WALLS IF GROUNDWATER IS ABOVE BOTTOM OF REINFORCED ZONE.
7. DO NOT USE A-2-4 SOIL FOR STANDARD TEMPORARY WALLS AROUND CULVERTS OR IN THE REINFORCED ZONE OF STANDARD TEMPORARY WALLS FOR SLOPE CASES. DO NOT USE CLASS VI SELECT MATERIAL IN THE REINFORCED ZONE OF STANDARD TEMPORARY WALLS WITH GEOTEXTILE REINFORCEMENT.
8. EMBEDMENT IS NOT REQUIRED FOR STANDARD TEMPORARY WALLS ON STRUCTURES OR ROCK AS DETERMINED BY THE ENGINEER.
9. DO NOT USE MORE THAN 4 DIFFERENT REINFORCEMENT STRENGTHS FOR EACH STANDARD TEMPORARY WALL.
10. GEOGRIDS ARE TYPICALLY APPROVED FOR ULTIMATE TENSILE STRENGTHS IN THE MACHINE DIRECTION (MD) AND CROSS-MACHINE DIRECTION (CD) OR SHORT-TERM DESIGN STRENGTHS FOR A 3-YEAR DESIGN LIFE IN THE MD BASED ON MATERIAL TYPE. THE LIST OF APPROVED GEOGRIDS WITH DESIGN STRENGTHS IS AVAILABLE FROM: connect.ncdot.gov/resources/Materials/Pages/SoilsLaboratory.aspx
    DEFINE MATERIAL TYPE FROM THE WEBSITE ABOVE FOR SHORING BACKFILL AS FOLLOWS:

MATERIAL TYPE	SHORING BACKFILL
BORROW	A-2-4 SOIL
FINE AGGREGATE	CLASS II, TYPE I OR CLASS III SELECT MATERIAL
COARSE AGGREGATE	CLASS V OR VI SELECT MATERIAL

    IF THE WEBSITE DOES NOT LIST A SHORT-TERM DESIGN STRENGTH FOR AN APPROVED GEOGRID, USE A SHORT-TERM DESIGN STRENGTH EQUAL TO THE ULTIMATE TENSILE STRENGTH DIVIDED BY 3.5 FOR THE GEOGRID REINFORCEMENT.
11. FOR GEOGRID REINFORCEMENT WITH LESS THAN 100% COVERAGE, STAGGER REINFORCEMENT SO GEOGRIDS ARE CENTERED OVER GAPS IN THE REINFORCEMENT LAYER BELOW.
12. AT THE CONTRACTOR'S OPTION, REINFORCEMENT MAY BE INSTALLED WITH THE MD PARALLEL TO THE WALL FACE IF BOTH OF THE FOLLOWING CONDITIONS OCCUR:
    - W (REINFORCEMENT ROLL WIDTH) ≥ (MINIMUM REQUIRED REINFORCEMENT LENGTH) + 4.5' AND
    - REINFORCEMENT STRENGTH IN CD ≥ MINIMUM REQUIRED REINFORCEMENT STRENGTH IN MD.
13. SUBMIT A "STANDARD TEMPORARY WALL SELECTION FORM" AT LEAST 7 DAYS BEFORE STARTING TEMPORARY WALL CONSTRUCTION. STANDARD SHORING SELECTION FORMS ARE AVAILABLE FROM: connect.ncdot.gov/resources/Geological/Pages/Geotech_Forms_Details.aspx
14. DO NOT PLACE SHORING BACKFILL OR REINFORCEMENT UNTIL EXCAVATION DIMENSIONS AND FOUNDATION MATERIAL ARE APPROVED.
15. FOR STANDARD TEMPORARY WALLS WITH PILE FOUNDATIONS IN THE REINFORCED ZONE, DRIVE PILES THROUGH REINFORCEMENT AFTER CONSTRUCTING TEMPORARY WALLS.
16. DO NOT SPLICE OR OVERLAP REINFORCEMENT SO SEAMS ARE PARALLEL TO THE WALL FACE.
17. CONTACT THE ENGINEER WHEN EXISTING OR FUTURE OBSTRUCTIONS SUCH AS FOUNDATIONS, PAVEMENTS, PIPES, INLETS OR UTILITIES WILL INTERFERE WITH REINFORCEMENT.
18. FOR STANDARD TEMPORARY WALLS WITH INTERIOR ANGLES LESS THAN 90 DEGREES, WRAP GEOSYNTHETICS AT ACUTE CORNERS AS DIRECTED BY THE ENGINEER.
19. FOR STANDARD TEMPORARY WALLS WITH TOP OF WALL WITHIN 5' OF FINISHED GRADE, REMOVE TOP FACING AND INCORPORATE TOP REINFORCEMENT LAYER INTO FILL WHEN PLACING FILL IN FRONT OF WALL.

STATE OF NORTH CAROLINA DEPARTMENT OF TRANSPORTATION

NORTH CAROLINA DEPARTMENT OF TRANSPORTATION DIVISION OF HIGHWAYS

GEOTECHNICAL ENGINEERING UNIT

STANDARD DETAIL NO. 1801.02

STANDARD TEMPORARY WALL SHEET 2 OF 3

DATE: 11-19-13

DocuSign Envelope ID: A87BB1CC-193C-453E-B835-A1C31CA4A2E0

PROJECT REFERENCE NO.	SHEET NO.
B-4792	2G-4

GEOTECHNICAL ENGINEER

NORTH CAROLINA PROFESSIONAL SEAL 022246 ENGINEER SCOTT A. HIDDEN

DocuSigned by: Scott A. Hidden F760CAEB96FC4D3... 11/9/2015

SIGNATURE DATE

ENGINEER

SIGNATURE DATE

SLOPE OR SURCHARGE CASE	GROUNDWATER DEPTH BELOW BOTTOM OF REINFORCED ZONE (SEE NOTE 6 ON SHEET 2) (FT)	SHORING BACKFILL TYPE IN THE REINFORCED ZONE (SEE NOTE 7 ON SHEET 2)	H - WALL HEIGHT (FT)																								
			< 4	5	6	7	8	9	10	11	12	13	14	15	16	17	18	19	20	21	22	23	24	25	26	27	28
SLOPE CASE	> 0	CLASS II,TYPE I, CLASS III,CLASS V OR CLASS VI SELECT MATERIAL	6	6	7	8	9	11	12	13	13	14	15	16	17	18	19	20	21	22	23	24	24	25	26	27	27
SURCHARGE CASE	> 0 TO 7 FOR H < 20′ > 0 TO 10 FOR H ≥ 20′	ALL SHORING BACKFILL TYPES	6	7	7	8	8	9	9	10	11	11	12	12	13	14	14	15	16	17	17	18	19	19	20	21	22
	> 7 FOR H < 20′ > 10 FOR H ≥ 20′	A-2-4 SOIL	6	6	7	8	8	9	9	10	11	11	12	12	13	14	14	15	16	16	17	18	18	19	20	20	21
		CLASS II,TYPE I OR CLASS III SELECT MATERIAL	6	6	7	7	8	8	9	10	10	11	11	12	12	13	14	15	15	16	16	17	17	18	18	19	20
		CLASS V OR CLASS VI SELECT MATERIAL	6	6	7	7	7	8	8	9	9	10	10	11	12	13	13	14	14	15	15	16	17	17	18	19	19

L – MINIMUM REQUIRED REINFORCEMENT LENGTH (FT)

(FOR ALL REINFORCEMENT TYPES)

WALL HEIGHT (H) + EMBEDMENT (FT)	NUMBER OF REINFORCEMENT LAYERS*
2.5 - 4	3
4 - 5.5	4
5.5 - 7	5
7 - 8.5	6
8.5 - 10	7
10 - 11.5	8
11.5 - 13	9
13 - 14.5	10
14.5 - 16	11
16 - 17.5	12
17.5 - 19	13
19 - 20.5	14
20.5 - 22	15
22 - 23.5	16
23.5 - 25	17
25 - 26.5	18
26.5 - 28	19
28 - 29.5	20

*BASED ON VERTICAL REINFORCEMENT SPACING SHOWN ON SHEET 1.

REINFORCEMENT LAYER NUMBER*	SHORING BACKFILL TYPE IN THE REINFORCED ZONE (SEE NOTE 7 ON SHEET 2)				
	SLOPE CASE		SURCHARGE CASE		
	CLASS II,TYPE I OR CLASS III SELECT MATERIAL	CLASS V SELECT MATERIAL	A-2-4 SOIL	CLASS II,TYPE I OR CLASS III SELECT MATERIAL	CLASS V SELECT MATERIAL
1	2400	2400	2400	2400	2400
2	2400	2400	2400	2400	2400
3	2400	2400	2400	2400	2400
4	2400	2400	2500	2400	2400
5	2500	2400	3000	2400	2400
6	3000	2400	3500	2800	2400
7	3500	2700	4000	3200	2600
8	4000	3100	4500	3600	2900
9	4500	3500	5000	4000	3200
10	5000	3900	5500	4400	3500
11	5500	4300	6000	4800	3800
12	6000	4700	6500	5200	4100
13	6500	5100	7000	5600	4400
14	7000	5400	7500	6000	4700
15	7500	5800	8000	6400	5000
16	8000	6200	8500	6800	5300
17	8500	6600	9000	7200	5600
18	9000	7000	9500	7600	5900
19	9500	7400	10000	8000	6200
20	10000	7800	10500	8400	6500

GEOTEXTILE REINFORCEMENT
ULTIMATE TENSILE STRENGTH (LB/FT)

REINFORCEMENT LAYER NUMBER*	SHORING BACKFILL TYPE IN THE REINFORCED ZONE (SEE NOTE 7 ON SHEET 2)				
	SLOPE CASE		SURCHARGE CASE		
	CLASS II,TYPE I OR CLASS III SELECT MATERIAL	CLASS V OR CLASS VI SELECT MATERIAL	A-2-4 SOIL	CLASS II,TYPE I OR CLASS III SELECT MATERIAL	CLASS V OR CLASS VI SELECT MATERIAL
1	240	200	340	290	240
2	380	310	520	430	350
3	530	420	700	570	460
4	690	550	870	720	570
5	860	690	1050	860	680
6	1030	830	1220	1000	790
7	1200	970	1400	1150	900
8	1370	1110	1580	1290	1010
9	1550	1240	1750	1430	1120
10	1720	1380	1930	1580	1230
11	1890	1520	2100	1720	1340
12	2060	1660	2280	1860	1450
13	2240	1800	2450	2010	1560
14	2410	1940	2630	2150	1670
15	2580	2080	2800	2290	1780
16	2750	2220	2980	2440	1890
17	2930	2360	3160	2580	2000
18	3100	2500	3330	2720	2110
19	3270	2640	3510	2860	2220
20	3440	2780	3690	3000	2330

GEOGRID REINFORCEMENT
SHORT–TERM DESIGN STRENGTH (LB/FT)

(SEE NOTE 10 ON SHEET 2.)

MINIMUM REQUIRED REINFORCEMENT STRENGTH IN MD

(SEE NOTE 9 ON SHEET 2.)
*SEE PARTIAL ELEVATION ON SHEET 1
FOR REINFORCEMENT LAYER NUMBERING.

NORTH CAROLINA DEPARTMENT OF TRANSPORTATION
DIVISION OF HIGHWAYS

GEOTECHNICAL ENGINEERING UNIT

STANDARD DETAIL NO. 1801.02

STANDARD
TEMPORARY WALL
SHEET 3 OF 3

DATE: 11-19-13

DocuSign Envelope ID: A87BB1CC-193C-453E-B835-A1C31CA4A2E0

4/04/06

COMPUTED BY: J.H. PATEL DATE: 4-25-2014
CHECKED BY: T.A. HARRIS DATE: 4-25-2014

PROJECT REFERENCE NO.	SHEET NO.
B-4792	3B-1

STATE OF NORTH CAROLINA
DIVISION OF HIGHWAYS

NOTE: Invert Elevations are for Bid Purposes only and shall not be used for project construction stakeout. See "Standard Specifications For Roads and Structures, Section 300-5".

SUB-REGIONAL & REGIONAL LIST OF PIPES, ENDWALLS, ETC. (FOR PIPES 48" & UNDER)

STATION / SIZE / THICKNESS OR GAUGE	LOCATION (LT,RT, OR CL)	STRUCTURE NO. FROM	STRUCTURE NO. TO	TOP ELEVATION	INVERT ELEVATION	INVERT ELEVATION	SLOPE CRITICAL	DRAINAGE PIPE (RCP, CSP, CAAP, HDPE, or PVC) 12"	15"	18"	24"	30"	36"	42"	48"	DO NOT USE RCP	DO NOT USE CSP	DO NOT USE CAAP	DO NOT USE HDPE	C.S. PIPE 12" .064	15" .064	18" .064	24" .064	36" .079	42" .109	48" .109	R.C. PIPE (CLASS III) 15"	18"	24"	30"	36"	42"	48"	R.C. PIPE (CLASS IV) 12"	15"	18"	24"	30"	36"	42"	48"	*** R. C. PIPE (CLASS V)	*** R. C. PIPE CULVERTS, CONTRACTOR DESIGN PIPE	*** R. C. PIPE CULVERTS, CONTRACTOR DESIGN PIPE	15" SIDE DRAIN PIPE	18" SIDE DRAIN PIPE	ENDWALLS STD. 838.01, STD. 838.11 OR STD. 838.80 (UNLESS NOTED OTHERWISE) CU. YDS. R.C.P.	C.S.P.	QUANTITIES FOR DRAINAGE STRUCTURES PER EACH (0' THRU 5.0')	* TOTAL L.F. FOR PAY QUANTITY SHALL BE COL. 'A' + (1.3 X COL. B') LIN. FT. A 5.0' THRU 10.0'	B 10.0' AND ABOVE	C.B. STD. 840.01 OR STD. 840.02	FRAME, GRATES AND HOOD STANDARD 840.03 TYPE OF GRATE E	F	G		CONCRETE TRANSITIONAL SECTION CATCH BASIN	DROP INLET		T.B.D.I. STD. 840.35	G.D.I. (N.S.) FRAME WITH TWO GRATES STD. 840.29			CORR. STEEL ELBOWS NO. & SIZE	CONC. COLLARS CL. "B" C.Y. STD 840.72	CONC. & BRICK PIPE PLUG, C.Y. STD. 840.71	PIPE REMOVAL LIN.FT.	REMARKS
-L- 13+25.00	LT	0401		1481.89	1478.14																																												1											1	1							TB 2GI
-L- 13+25.00	LT	0401	0402		1478.14	1478.00			12							X	X	X																																																		
-L- 10+95.00	RT															X	X	X																												20																							REMOVE EXISTING 15" CMP
-L- 14+95.00	RT															X	X	X																											20																								REMOVE EXISTING 12" CMP
-L- 15+20.00	CL				XXX	XXX											X	X	X										44																																									REMOVE EXISTING 18" CMP
PROJECT TOTAL									12																				44																20	20			1											1	1							
SAY									12																				44																20	20			1											1	1							

ABBREVIATIONS

- C.B. CATCH BASIN
- N.D.I. NARROW DROP INLET
- D.I. DROP INLET
- G.D.I. GRATED DROP INLET
- G.D.I. (N.S.) GRATED DROP INLET (NARROW SLOT)
- J.B. JUNCTION BOX
- M.H. MANHOLE
- T.B.D.I. TRAFFIC BEARING DROP INLET
- T.B.J.B. TRAFFIC BEARING JUNCTION BOX

"N" = DISTANCE FROM EDGE OF LANE TO FACE OF GUARDRAIL.
TOTAL SHOULDER WIDTH = DISTANCE FROM EDGE OF TRAVEL LANE TO SHOULDER BREAK POINT.
FLARE LENGTH = DISTANCE FROM LAST SECTION OF PARALLEL GUARDRAIL TO END OF GUARDRAIL.
W = TOTAL WIDTH OF FLARE FROM BEGINNING OF TAPER TO END OF GUARDRAIL.
G = GATING IMPACT ATTENUATOR TYPE 350
NG = NON-GATING IMPACT ATTENUATOR TYPE 350

TEMPORARY GUARDRAIL SUMMARY

SURVEY LINE	BEG. STA.	END STA.	LOCATION	LENGTH STRAIGHT	LENGTH SHOP CURVED	LENGTH DOUBLE FACED	WARRANT POINT APPROACH END	WARRANT POINT TRAILING END	"N" DIST. FROM E.O.L.	TOTAL SHOULDER WIDTH	FLARE LENGTH APPROACH END	FLARE LENGTH TRAILING END	W APPROACH END	W TRAILING END	ANCHORS XI MOD	XI	GRAU 350 TL-2	M-350	XIII	CAT-1	VI MOD	BIC	AT-1	IMPACT ATTENUATOR TYPE 350 EA	G	NG	SINGLE FACED GUARDRAIL	REMOVE EXISTING GUARDRAIL	REMOVE AND STOCKPILE EXISTING GUARDRAIL	REMARKS
-L-	12+25.00	13+25.00	CL.	100.00													2													GUARDRAIL ANCHORED TO CULVERT
			PROJECT SUBTOTALS	100.00													2													
		DEDUCTION FOR GUARDRAIL ANCHORS		-50.00																										
																	GRAU-350 TL-2		2 EA @	25.00' =	50.00									
			PROJECT TOTALS	50.00																										
			SAY	50.00																										

ADDITIONAL GUARDRAIL POSTS: 2 EA

"N" = DISTANCE FROM EDGE OF LANE TO FACE OF GUARDRAIL.
TOTAL SHOULDER WIDTH = DISTANCE FROM EDGE OF TRAVEL LANE TO SHOULDER BREAK POINT.
FLARE LENGTH = DISTANCE FROM LAST SECTION OF PARALLEL GUARDRAIL TO END OF GUARDRAIL.
W = TOTAL WIDTH OF FLARE FROM BEGINNING OF TAPER TO END OF GUARDRAIL.
G = GATING IMPACT ATTENUATOR TYPE 350
NG = NON-GATING IMPACT ATTENUATOR TYPE 350

GUARDRAIL SUMMARY

SURVEY LINE	BEG. STA.	END STA.	LOCATION	LENGTH STRAIGHT	LENGTH SHOP CURVED	LENGTH DOUBLE FACED	WARRANT POINT APPROACH END	WARRANT POINT TRAILING END	"N" DIST. FROM E.O.L.	TOTAL SHOULDER WIDTH	FLARE LENGTH APPROACH END	FLARE LENGTH TRAILING END	W APPROACH END	W TRAILING END	ANCHORS XI MOD	XI	GRAU 350 TL-2	M-350	XIII	CAT-1	VI MOD	BIC	AT-1	IMPACT ATTENUATOR TYPE 350 EA	G	NG	SINGLE FACED GUARDRAIL	REMOVE EXISTING GUARDRAIL	REMOVE AND STOCKPILE EXISTING GUARDRAIL	REMARKS
-L-	10+23.18	13+61.73	LT.	338.55				13+06.25	4'	7'							2													
-L-	11+97.29	13+03.05	RT.	83.55	27.95		12+62.32		4'	7'							1						1							
			PROJECT SUBTOTALS	422.10	27.95												3						1							
		DEDUCTION FOR GUARDRAIL ANCHORS		-75.00	-6.25																									
																	GRAU-350 TL-2		3 EA @	25.00' =	75.00									
																		AT-1	1 EA @	6.25' =	6.25									
			PROJECT TOTALS	347.10	21.70																									
			SAY	350	25																									

ADDITIONAL GUARDRAIL POSTS: 5 EA

07-NOV-2015 17:22
R:\Roadway\Proj\B4792_Rdy_sum.dgn
$$$$USERNAME$$$$

DocuSign Envelope ID: A87BB1CC-193C-453E-B835-A1C31CA4A2E0

4/04/06

COMPUTED BY: J.H. PATEL DATE: 4-25-2014
CHECKED BY: T.A. HARRIS DATE: 4-25-2014

STATE OF NORTH CAROLINA
DIVISION OF HIGHWAYS

PROJECT REFERENCE NO.	SHEET NO.
B-4792	3B-2

SUMMARY OF SUBSURFACE DRAINAGE

SURVEY LINE	STATION	STATION	LOCATION LT/RT/CL	DRAIN TYPE* UD/BD/SD	LF
CONTINGENCY				SD	100
				TOTAL:	100

*UD = UNDERDRAIN
*BD = BLIND DRAIN
*SD = SUBSURFACE DRAIN

SUMMARY OF EARTHWORK

STATION	STATION	UNCL. EXCAV.	EMBANK. +%	BORROW	WASTE
PHASE I					
-L- LT- 9+99.74	-L- LT- 12+80.00	4	1,410	1,406	
-L- LT- 12+81.60	-L- LT- 15+05.00	6	222	216	
PHASE 1 SUBTOTALS:		10	1,632	1,622	
PHASE II					
-L- RT- 9+99.74	-L- RT- 12+80.00	247	214		33
-L- RT- 12+81.60	-L- RT- 15+05.00	493	49		444
PHASE 2 SUBTOTALS:		740	263		477
PROJECT SUBTOTALS		750	1,895	1,622	477
LOSS DUE TO CLEAR. & GRUB.					
WASTE IN LIEU OF BORROW					
REPLACE TOPSOIL IN BORROW PIT				81	
GRAND TOTALS:		750		1,703	477
SAY:		750		1,710	

UNDERCUT EXCAVATION = 100 CU. YD.
SHALLOW UNDERCUT = 100 CU. YD.
SELECT GRANULAR MATERIAL = 100 CU. YD.

Earthwork quantities are calculated by the Roadway Design Unit. These earthwork quantities are based in part on subsurface data provided by the Geotechnical Engineering Unit.

Note: "Quantities are approximate only. The Resident Engineer will re-cross-section the work accurately when the project is staked out. These cross-section notes will be used in computing the final quantities for which the contractor will be paid."

Note: Approximate quantities only. Unclassified Excavation, Borrow Excavation, Shoulder Borrow, Fine Grading, Clearing and Grubbing, Breaking of Existing Pavement, and Removal of Existing Pavement will be paid for at the contract lump sum price for "Grading."

PAVEMENT REMOVAL SUMMARY

SURVEY LINE	STATION	STATION	LOCATION LT/RT/CL	SQ. YD.
PHASE I				
-L-	10+56.00	12+22.00	LT	85.66
-L-	13+32.00	14+50.00	LT	86.55
PHASE II				
-L-	10+00.00	12+61.00	RT	363.84
-L-	12+89.00	14+50.00	RT	233.67
			TOTAL:	769.73
			SAY:	770

SHOULDER BERM GUTTER SUMMARY

SURVEY LINE	STATION	STATION	LENGTH
-L-	10+56.00	13+25.00	257.00
		TOTAL:	257.00
		SAY:	260

SUMMARY OF AGGREGATE SUBGRADE/STABILIZATION

SURVEY LINE	STATION	STATION	Aggregate Type ASU/AST	Aggregate Thickness INCHES	Shallow Undercut CY	Class IV Subgrade Stabilization TONS	Geotextile for Soil Stabilization SY	Stabilizer Aggregate TONS	Class IV Aggregate Stabilization TONS
CONTINGENCY			ASU		100	190	150		
				TOTAL:	100	190	150		

*ASU = AGGREGATE SUBGRADE
*AST = AGGREGATE STABILIZATION

SUMMARY OF VARIABLE 0" TO 2.5" MILLING

SURVEY LINE	STATION	STATION	LOCATION	SQ. YD.
-L-	9+99.74	10+56.00	CL	109.13
-L-	14+50.00	15+05.00	CL	117.83
			TOTAL:	226.95
			SAY:	230

5 EA

03-NOV-2015 13:11
$$$$USERNAME$$$$ $$$$DGN$$$$ $$$$DATE$$$$

DocuSign Envelope ID: A87BB1CC-193C-453E-B835-A1C31CA4A2E0

PROJECT REFERENCE NO.	SHEET NO.
B-4792	4
R/W SHEET NO.	
ROADWAY DESIGN ENGINEER	HYDRAULICS ENGINEER
SEAL 033296 Steven D. Kendall 4/4/2016	SEAL 022100 Stephen R. Morgan 4/4/2016

PARCEL 3 NOTE: THE PROPERTY AREA LOCATED ON THE NORTHWEST SIDE OF SR 1102 IS PROTECTED BY MEANS OF A CONSERVATION EASEMENT HELD BY THE N.C. CLEAN WATER MANAGEMENT TRUST FUND (CWMTF) AS FOUND RECORDED IN D.B. 262 - PG. 792, TRACT 3.

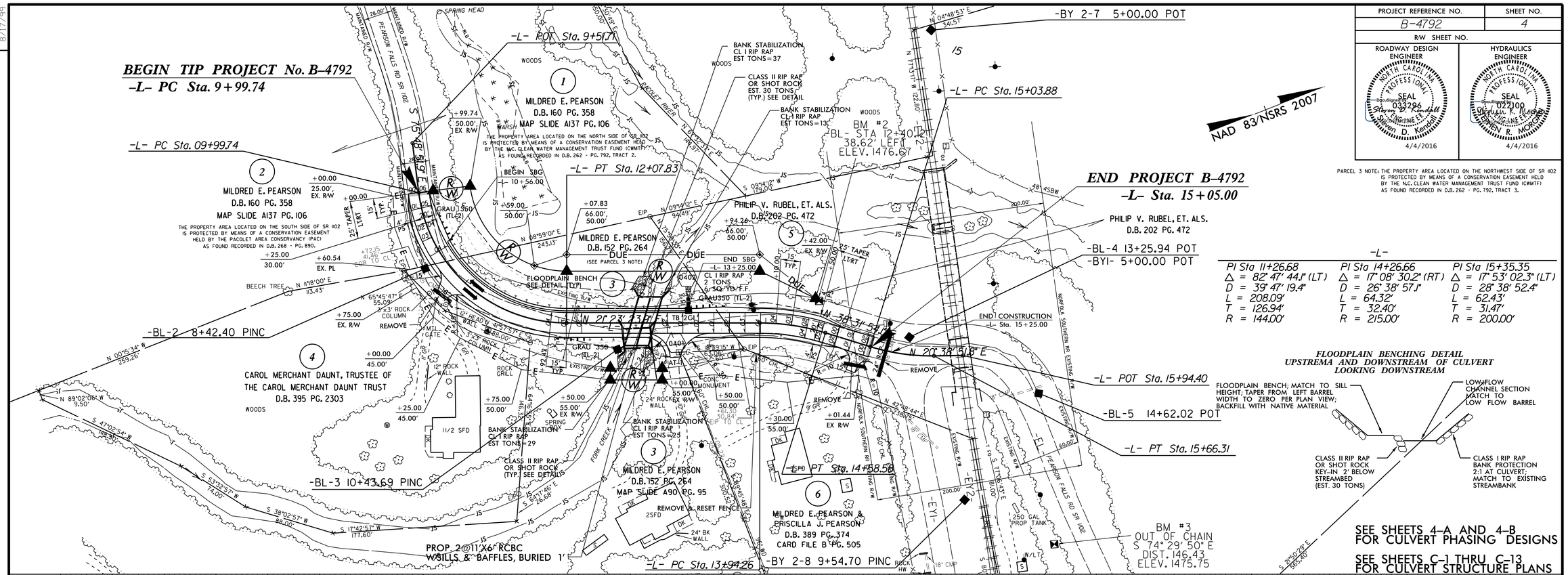

-L-

PI Sta 11+26.68	PI Sta 14+26.66	PI Sta 15+35.35
Δ = 82° 47' 44.1" (LT)	Δ = 17° 08' 30.2" (RT)	Δ = 17° 53' 02.3" (LT)
D = 39° 47' 19.4"	D = 26° 38' 57.1"	D = 28° 38' 52.4"
L = 208.09'	L = 64.32'	L = 62.43'
T = 126.94'	T = 32.40'	T = 31.47'
R = 144.00'	R = 215.00'	R = 200.00'

FLOODPLAIN BENCHING DETAIL UPSTREMA AND DOWNSTREAM OF CULVERT LOOKING DOWNSTREAM

SEE SHEETS 4-A AND 4-B FOR CULVERT PHASING DESIGNS

SEE SHEETS C-1 THRU C-13 FOR CULVERT STRUCTURE PLANS

-L- (SR 1102 PEARSON FALLS RD.)

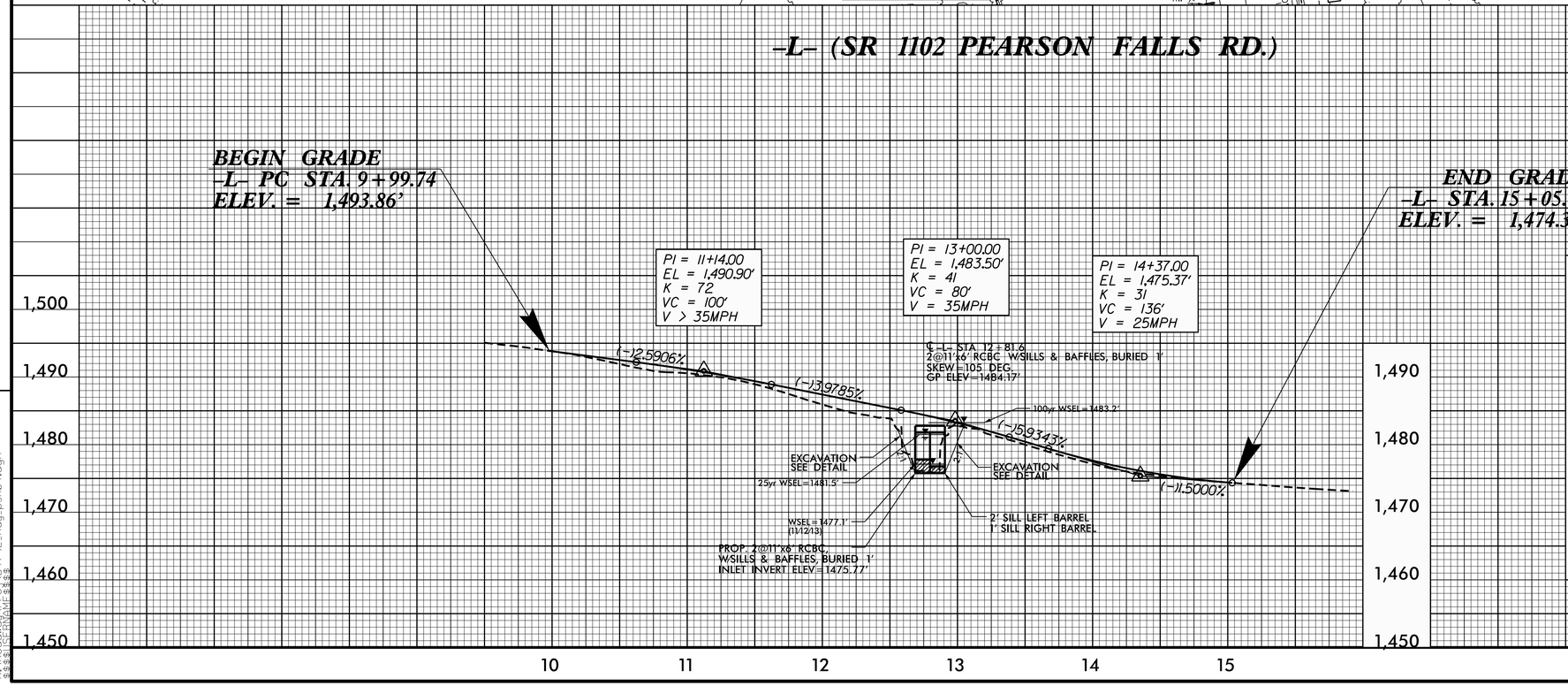

CULVERT HYDRAULIC DATA

DESIGN DISCHARGE	= 650	CFS
DESIGN FREQUENCY	= 25	YRS
DESIGN HW ELEVATION	= 1,481.5	FT
BASE DISCHARGE	= 950	CFS
BASE FREQUENCY	= 100	YRS
BASE HW ELEVATION	= 1,483.2	FT
OVERTOPPING DISCHARGE	= 900	CFS
OVERTOPPING FREQUENCY	= 50+	YRS
OVERTOPPING ELEVATION	= 1,483+/-	FT

CULVERT OUTLET TYPICAL CHANNEL SECTION DOWNSTREAM

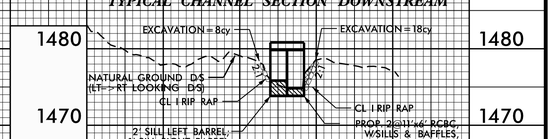

NOTE: BACKFILL WITH NATIVE MATERIAL*

CULVERT INLET TYPICAL CHANNEL SECTION UPSTREAM

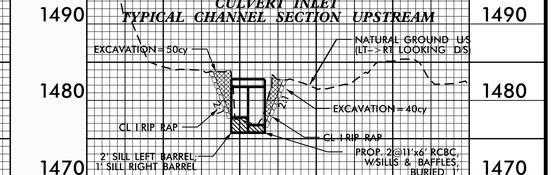

* NATIVE MATERIL CONSISTS OF MATERIAL THAT IS EXCAVATED FROM THE STREAM BED AT THE PROJECT SITE DURING CONSTRUCTION. NATIVE MATERIAL IS SUBJECT TO APPROVAL BY THE ENGINEER AND MAY BE SUBJECT TO PERMIT CONDITIONS.

REVISIONS

8/17/99

21-MAR-2016 09:38
R:\Roadway\Proj\B4792_Rdy_psh04.dgn
$$USERNAME$$

DocuSign Envelope ID: A87BB1CC-193C-453E-B835-A1C31CA4A2E0

STATE OF NORTH CAROLINA
DIVISION OF HIGHWAYS

TRANSPORTATION MANAGEMENT PLAN

POLK COUNTY

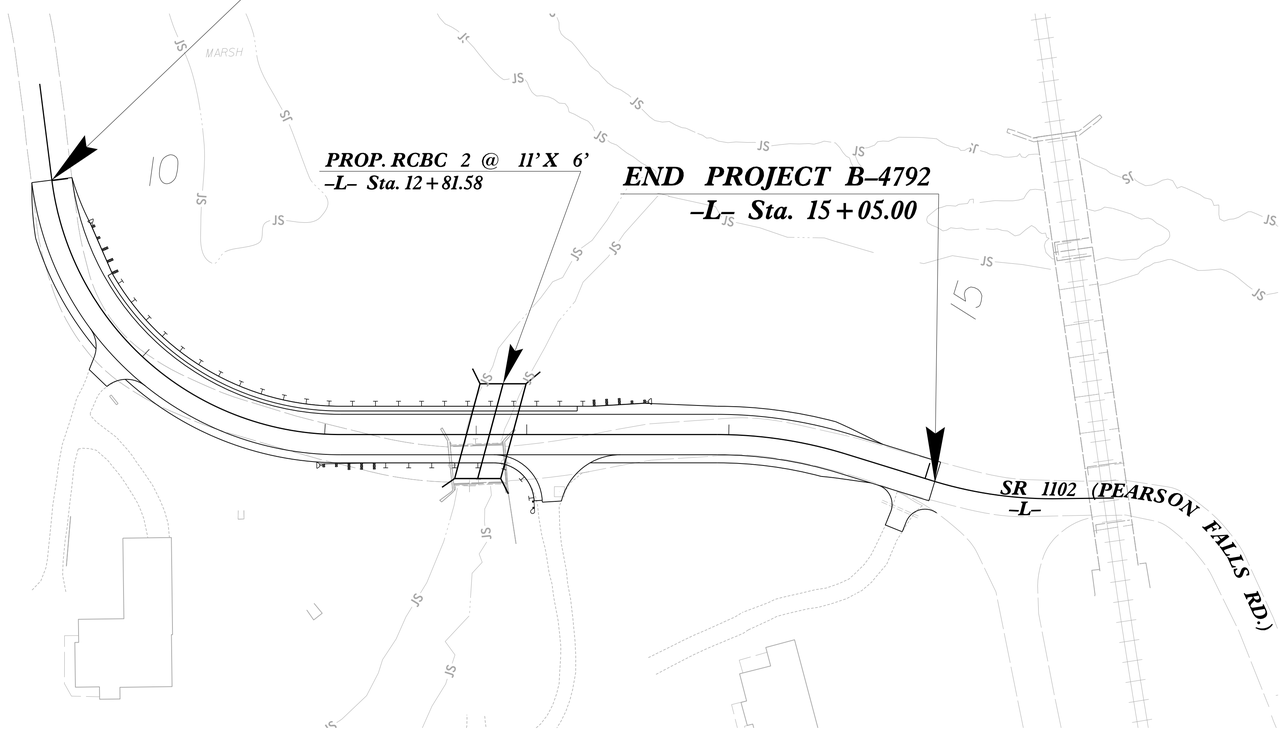

LOCATION: REPLACEMENT OF BRIDGE NO. 4 OVER FORK CREEK (A SMALL BRANCH OF PACOLET RIVER) ON SR 1102.

INDEX OF SHEETS

SHEET NO.	TITLE
TMP-1	TITLE SHEET AND INDEX OF SHEETS
TMP-2	LIST OF APPLICABLE ROADWAY STANDARD DRAWINGS, LEGEND AND MANAGEMENT STRATEGIES
TMP-3	GENERAL NOTES
TMP-4	PHASING
TMP-5	TEMPORARY SHORING NOTES
TMP-6	TEMPORARY TRAFFIC CONTROL DETAIL- PHASE 1
TMP-7	TEMPORARY TRAFFIC CONTROL DETAIL- PHASE 2
TMP-8	SPECIAL PROVISION
TMP-9	PORTABLE CONCRETE BARRIER AT TEMPORARY SHORING DETAIL

SHEET NO.
TMP–1

B–4792

TIP PROJECT:

WORK ZONE SAFETY & MOBILITY
"from the MOUNTAINS to the COAST"

N.C.D.O.T. WORK ZONE TRAFFIC CONTROL
1561 MAIL SERVICE CENTER (MSC) RALEIGH, NC 27699–1561
750 N. GREENFIELD PARKWAY, GARNER, NC 27529 (DELIVERY)
PHONE: (919) 773–2800 FAX: (919) 771–2745

_____ STATE TRAFFIC MANAGEMENT ENGINEER

_____ TRAFFIC CONTROL PROJECT ENGINEER

_____ TRAFFIC CONTROL PROJECT DESIGN ENGINEER

_____ TRAFFIC CONTROL DESIGN ENGINEER

DIVISION OF HIGHWAYS · STATE OF NORTH CAROLINA · DEPARTMENT OF TRANSPORTATION · WORK ZONE TRAFFIC CONTROL

RS&H

APPROVED: _____
DATE: _____

NORTH CAROLINA PROFESSIONAL SEAL 042357 ENGINEER ALLISON C. DRAKE
3/28/2016

10/27/2015
R:\Traffic\B4792_TC_TMP.dgn
9:9:56 AM

DocuSign Envelope ID: A87BB1CC-193C-453E-B835-A1C31CA4A2E0

PROJ. REFERENCE NO.	SHEET NO.
B-4792	TMP-2

ROADWAY STANDARD DRAWINGS

THE FOLLOWING ROADWAY STANDARDS AS SHOWN IN "ROADWAY STANDARD DRAWINGS" - PROJECT SERVICES UNIT - N.C. DEPARTMENT OF TRANSPORTATION - RALEIGH, N.C., DATED JANUARY 2012 ARE APPLICABLE TO THIS PROJECT AND BY REFERENCE HEREBY ARE CONSIDERED A PART OF THESE PLANS:

STD. NO.	TITLE
1101.01	WORK ZONE WARNING SIGNS
1101.02	TEMPORARY LANE CLOSURES
1101.04	TEMPORARY SHOULDER CLOSURES
1101.05	WORK ZONE VEHICLE ACCESSES
1101.11	TRAFFIC CONTROL DESIGN TABLES
1110.01	STATIONARY WORK ZONE SIGNS
1110.02	PORTABLE WORK ZONE SIGNS
1130.01	DRUMS
1135.01	CONES
1145.01	BARRICADES
1150.01	FLAGGING DEVICES
1160.01	TEMPORARY CRASH CUSHION
1165.01	WORK VEHICLE LIGHTING SYSTEMS AND TMA DELINEATION
1170.01	PORTABLE CONCRETE BARRIER
1180.01	SKINNY - DRUM
1205.01	PAVEMENT MARKINGS - LINE TYPES AND OFFSETS
1205.02	PAVEMENT MARKINGS - TWO LANE AND MULTILANE ROADWAYS
1205.04	PAVEMENT MARKINGS - INTERSECTIONS
1205.12	PAVEMENT MARKINGS - BRIDGES
1250.01	RAISED PAVEMENT MARKERS - INSTALLATION SPACING
1251.01	RAISED PAVEMENT MARKERS - (PERMANENT AND TEMPORARY)
1261.01	GUARDRAIL AND BARRIER DELINEATORS - INSTALLATION SPACING
1261.02	GUARDRAIL AND BARRIER DELINEATORS - TYPES AND MOUNTING
1262.01	GUARDRAIL END DELINEATION

MANAGEMENT STRATEGIES

CONSTRUCTION

REMOVE AND REPLACE EXISTING STRUCTURE AND APPROACHES ALONG THE EXISTING ROADWAY ALIGNMENT AS SHOWN IN THE CONSTRUCTION PLANS.

TMP DESIGN PARAMETERS

DURING THE STAGED CONSTRUCTION, SR 1102 TRAFFIC WILL BE PLACED IN A ONE-LANE TWO-WAY PATTERN ON THE EXISTING ROADWAY USING A PORTABLE TRAFFIC SIGNAL SYSTEM.

LEGEND

GENERAL

- DIRECTION OF TRAFFIC FLOW
- DIRECTION OF PEDESTRIAN TRAFFIC FLOW
- EXIST. PVMT.
- NORTH ARROW
- PROPOSED PVMT.
- TEMPORARY SHORING
- WORK AREA
- REMOVAL

TRAFFIC CONTROL DEVICES

- BARRICADE (TYPE III)
- CONE / TUBULAR MARKER
- DRUM / SKINNY DRUM
- TEMPORARY CRASH CUSHION
- FLASHING ARROW PANEL (TYPE C)
- FLAGGER
- LAW ENFORCEMENT
- TRUCK MOUNTED IMPACT ATTENUATOR (TMIA)
- CHANGEABLE MESSAGE SIGN

TEMPORARY PAVEMENT MARKING

24" WHITE STOP BAR

TEMPORARY SIGNING

- PORTABLE SIGN
- STATIONARY SIGN
- STATIONARY OR PORTABLE SIGN

SIGNALS

EXISTING PROPOSED TEMPORARY

PAVEMENT MARKINGS

- EXISTING LINES
- TEMPORARY LINES

PAVEMENT MARKERS

- CRYSTAL/CRYSTAL
- CRYSTAL/RED
- YELLOW/YELLOW

PAVEMENT MARKING SYMBOLS

PAVEMENT MARKING SYMBOLS

RS&H

APPROVED:_____ DATE:_____

NORTH CAROLINA PROFESSIONAL SEAL 062357 ENGINEER ALISON C. DRAKE

DocuSigned by: Alison Drake 10/28/2016

DIVISION OF HIGHWAYS STATE OF NORTH CAROLINA DEPARTMENT OF TRANSPORTATION WORK ZONE TRAFFIC CONTROL

LIST OF APPLICABLE ROADWAY STANDARD DRAWINGS, LEGEND AND MANAGEMENT STRATEGIES

10/27/2015
R:\Traffic\B4792_TC_TMP.dgn
9:24:30 AM

DocuSign Envelope ID: A87BB1CC-193C-453E-B835-A1C31CA4A2E0

GENERAL NOTES

CHANGES MAY BE REQUIRED WHEN PHYSICAL DIMENSIONS IN THE DETAIL DRAWINGS, STANDARD DETAILS, AND ROADWAY DETAILS ARE NOT ATTAINABLE TO MEET FIELD CONDITIONS OR RESULT IN DUPLICATE OR UNDESIRED OVERLAPPING OF DEVICES. MODIFICATION MAY INCLUDE: MOVING, SUPPLEMENTING, COVERING, OR REMOVAL OF DEVICES AS DIRECTED BY THE ENGINEER.

THE FOLLLOWING GENERAL NOTES APPLY AT ALL TIMES FOR THE DURATION OF THE CONSTRUCTION PROJECT EXCEPT WHEN OTHERWISE NOTED IN THE PLAN OR DIRECTED BY THE ENGINEER.

LANE AND SHOULDER CLOSURE REQUIREMENTS

A) REMOVE LANE CLOSURE DEVICES FROM THE LANE WHEN WORK IS NOT BEING PERFORMED BEHIND THE LANE CLOSURE OR WHEN A LANE CLOSURE IS NO LONGER NEEDED OR AS DIRECTED BY THE ENGINEER.

B) WHEN PERSONNEL AND/OR EQUIPMENT ARE WORKING WITHIN 15 FT OF AN OPEN TRAVEL LANE, CLOSE THE NEAREST OPEN SHOULDER USING ROADWAY STANDARD DRAWING NO. 1101.01 UNLESS THE WORK AREA IS PROTECTED BY BARRIER OR GUARDRAIL OR A LANE CLOSURE IS INSTALLED.

C) WHEN PERSONNEL AND/OR EQUIPMENT ARE WORKING ON THE SHOULDER ADJACENT TO AN UNDIVIDED FACILITY AND WITHIN 5 FT OF AN OPEN TRAVEL LANE, CLOSE THE NEAREST OPEN TRAVEL LANE USING ROADWAY STANDARD DRAWING NO. 1101.02 UNLESS THE WORK AREA IS PROTECTED BY BARRIER OR GUARDRAIL.

WHEN PERSONNEL AND/OR EQUIPMENT ARE WORKING ON THE SHOULDER ADJACENT TO A DIVIDED FACILITY AND WITHIN 10 FT OF AN OPEN TRAVEL LANE, CLOSE THE NEAREST OPEN TRAVEL LANE USING ROADWAY STANDARD DRAWING NO. 1101.02 UNLESS THE WORK AREA IS PROTECTED BY BARRIER OR GUARDRAIL.

D) WHEN PERSONNEL AND/OR EQUIPMENT ARE WORKING WITHIN A LANE OF TRAVEL OF AN UNDIVIDED OR DIVIDED FACILITY, CLOSE THE LANE ACCORDING TO THE TRAFFIC CONTROL PLANS, ROADWAY STANDARD DRAWINGS, OR AS DIRECTED BY THE ENGINEER. CONDUCT THE WORK SO THAT ALL PERSONNEL AND/OR EQUIPMENT REMAIN WITHIN THE CLOSED TRAVEL LANE.

E) DO NOT WORK SIMULTANEOUSLY WITHIN 15 FT ON BOTH SIDES OF AN OPEN TRAVELWAY, RAMP, OR LOOP WITHIN THE SAME LOCATION UNLESS PROTECTED WITH GUARDRAIL OR BARRIER.

PAVEMENT EDGE DROP OFF REQUIREMENTS

F) BACKFILL AT A 6:1 SLOPE UP TO THE EDGE AND ELEVATION OF EXISTING PAVEMENT IN AREAS ADJACENT TO AN OPENED TRAVEL LANE THAT HAS AN EDGE OF PAVEMENT DROP–OFF AS FOLLOWS:

BACKFILL DROP–OFFS THAT EXCEED 3 INCHES ON ROADWAYS WITH POSTED SPEED LIMITS LESS THAN 45 MPH.

BACKFILL WITH SUITABLE COMPACTED MATERIAL, AS APPROVED BY THE ENGINEER, AT NO EXPENSE TO THE DEPARTMENT.

G) DO NOT EXCEED A DIFFERENCE OF 2 INCHES IN ELEVATION BETWEEN OPEN LANES OF TRAFFIC FOR NOMINAL LIFTS OF 1.5 INCHES. INSTALL ADVANCE WARNING "UNEVEN LANES" SIGNS (W8–11) 100 FT IN ADVANCE AND A MINIMUM OF EVERY HALF MILE THROUGHOUT THE UNEVEN AREA.

TRAFFIC PATTERN ALTERATIONS

H) NOTIFY THE ENGINEER TWENTY ONE (21) CALENDAR DAYS PRIOR TO ANY TRAFFIC PATTERN ALTERATION.

SIGNING

I) INSTALL ADVANCE WORK ZONE WARNING SIGNS WHEN WORK IS WITHIN 40 FT FROM THE EDGE OF TRAVEL LANE AND NO MORE THAN THREE (3) DAYS PRIOR TO THE BEGINNING OF CONSTRUCTION.

J) ENSURE ALL NECESSARY SIGNING IS IN PLACE PRIOR TO ALTERING ANY TRAFFIC PATTERN.

K) INSTALL BLACK ON ORANGE "DIP" SIGNS (W8–2) AND/OR "BUMP" SIGNS (W8–1) 100 FT IN ADVANCE OF THE UNEVEN AREA, OR AS DIRECTED BY THE ENGINEER.

TRAFFIC BARRIER

L) INSTALL TEMPORARY BARRIER ACCORDING TO THE TRANSPORTATION MANAGEMENT PLANS A MAXIMUM OF TWO (2) WEEKS PRIOR TO BEGINNING WORK IN ANY LOCATION. ONCE TEMPORARY BARRIER IS INSTALLED AT ANY LOCATION PROCEED IN A CONTINOUS MANNER TO COMPLETE THE PROPOSED WORK IN THAT LOCATION UNLESS OTHERWISE STATED IN THE TRANSPORTATION MANAGEMENT PLANS OR AS DIRECTED BY THE ENGINEER.

DO NOT PLACE BARRIER DIRECTLY ON ANY SURFACE OTHER THAN ASPHALT OR CONCRETE.

ONCE TEMPORARY BARRIER IS INSTALLED AT ANY LOCATION AND NO WORK IS PERFORMED BEHIND THE TEMPORARY BARRIER FOR A PERIOD LONGER THAN TWO (2) MONTHS, REMOVE /RESET TEMPORARY BARRIER AT NO COST TO THE DEPARTMENT UNLESS OTHERWISE STATED IN THE TRANSPORTATION MANAGEMENT PLANS, TEMPORARY BARRIER IS PROTECTING A HAZARD, OR AS DIRECTED BY THE ENGINEER.

INSTALL TEMPORARY BARRIER WITH THE TRAFFIC FLOW BEGINNING WITH THE UPSTREAM SIDE OF TRAFFIC. REMOVE TEMPORARY BARRIER AGAINST THE TRAFFIC FLOW BEGINNING WITH THE DOWNSTREAM SIDE OF TRAFFIC.

INSTALL AND SPACE DRUMS NO GREATER THAN TWICE THE POSTED SPEED LIMIT (MPH) TO CLOSE OR KEEP THE SECTION OF THE ROADWAY CLOSED UNTIL THE TEMPORARY BARRIER CAN BE PLACED OR AFTER THE TEMPORARY BARRIER IS REMOVED.

M) PROTECT THE APPROACH END OF MOVABLE/PORTABLE CONCRETE BARRIER AT ALL TIMES DURING THE INSTALLATION AND REMOVAL OF THE BARRIER BY EITHER A TRUCK MOUNTED ATTENUATOR (MAXIMUM 72 HOURS) OR A TEMPORARY CRASH CUSHION.

PROTECT THE APPROACH END OF MOVABLE/PORTABLE CONCRETE BARRIER FROM ONCOMING TRAFFIC AT ALL TIMES BY A TEMPORARY CRASH CUSHION UNLESS THE APPROACH END OF MOVABLE/PORTABLE CONCRETE BARRIER IS OFFSET FROM ONCOMING TRAFFIC AS FOLLOWS OR AS SHOWN IN THE PLANS: (SEE ALSO 1101.05)

POSTED SPPED LIMIT	MINIMUM OFFSET
40 OR LESS	15 FT
45 – 50	20 FT
55	25 FT
60 MPH OR HIGHER	30 FT

TRAFFIC CONTROL DEVICES

N) WHEN LANE CLOSURES ARE NOT IN EFFECT SPACE CHANNELIZING DEVICES IN WORK AREAS NO GREATER IN FEET THAN TWICE THE POSTED SPEED LIMIT (MPH) EXCEPT, 10 FT ON–CENTER IN RADII, AND 3 FT OFF THE EDGE OF AN OPEN TRAVELWAY. REFER TO STANDARD SPECIFICATIONS FOR ROADS AND STRUCTURES SECTIONS 1130 (DRUMS), 1135 (CONES), AND 1180 (SKINNY DRUMS) FOR ADDITIONAL REQUIREMENTS.

O) PLACE TYPE III BARRICADES, WITH "ROAD CLOSED" SIGN R11–2 ATTACHED, OF SUFFICIENT LENGTH TO CLOSE ENTIRE ROADWAY.

RS&H

APPROVED:_____ DATE:_____

NORTH CAROLINA PROFESSIONAL SEAL 042857 ENGINEER ALLISON C. DRAKE
10/28/2016

DIVISION OF HIGHWAYS STATE OF NORTH CAROLINA DEPARTMENT OF TRANSPORTATION WORK ZONE TRAFFIC CONTROL

GENERAL NOTES

10/27/2015
R:\Traffic\B4792_TC_TMP.dgn
9:25:14 AM

DocuSign Envelope ID: A87BB1CC-193C-453E-B835-A1C31CA4A2E0

PROJ. REFERENCE NO.	SHEET NO.
B-4792	TMP-4

PHASING

PHASE 1

STEP 1: PRIOR TO CONSTRUCTION, INSTALL WORK ZONE ADVANCE WARNING SIGNS ALONG SR 1102 (PEARSON FALLS RD.), AS SHOWN ON ROADWAY STANDARD DRAWING NO. 1101.01, SHEET 3 OF 3.

STEP 2: AWAY FROM TRAFFIC, USE FLAGGER OPERATIONS TO COMPLETE THE FOLLOWING AS SHOWN ON ROADWAY STANDARD DRAWING NO. 1101.02, SHEET 14 OF 15 AND SHEET TMP–6:

–INSTALL PORTABLE CONCRETE BARRIER AND TEMPORARY CRASH CUSHIONS IN THE LOCATIONS SHOWN ON PHASE 1 DETAIL, SHEET TMP–6.

–INSTALL THE PORTABLE TRAFFIC SIGNAL SYSTEM, DRUMS, TEMPORARY PAINT STOP BARS, AND STATIONARY CONSTRUCTION ZONE SIGNING SHOWN ON PHASE 1 DETAIL, SHEET TMP–6.

STEP 3: AWAY FROM TRAFFIC, ACTIVATE THE PORTABLE TRAFFIC SIGNAL SYSTEM AND SHIFT TRAFFIC INTO A ONE–LANE, TWO–WAY PATTERN. INSTALL TEMPORARY SHORING AND TEMPORARY FABRIC WALL BEHIND THE PORTABLE CONCRETE BARRIER IN LOCATIONS SHOWN ON PHASE 1 DETAIL, SHEET TMP–6.

STEP 4: AWAY FROM TRAFFIC, CONSTRUCT –L– AND STAGE 1 OF THE PROPOSED CULVERT AND ROADWAY APPROACHES IN THE LOCATIONS SHOWN ON THE PHASE 1 DETAIL, SHEET TMP–6 UP TO, BUT NOT INCLUDING, THE FINAL LAYER OF SURFACE COURSE. INSTALL PERMANENT GUARDRAIL ALONG THE LEFT SIDE OF –L– AS SHOWN ON THE PHASE I DETAIL, SHEET TMP–6.

STEP 5: AWAY FROM TRAFFIC, INSTALL TEMPORARY GUARDRAIL ALONG –L– AS SHOWN ON THE PHASE II DETAIL, SHEET TMP–7. REMOVE PORTABLE CONCRETE BARRIER AND TEMPORARY CRASH CUSHIONS.

PHASE II

STEP 1: AWAY FROM TRAFFIC, COMPLETE THE FOLLOWING AS SHOWN ON ROADWAY STANDARD DRAWING NO. 1101.02, SHEET 14 OF 15 AND SHEET TMP–7:

–RESET DRUMS IN THE LOCATIONS SHOWN ON PHASE II DETAIL, SHEET TMP–7.

–SHIFT –L– TRAFFIC ONTO THE NEWLY CONSTRUCTED SECTION OF THE PROPOSED ROADWAY AND CULVERT INTO A ONE–LANE, TWO–WAY PATTERN.

STEP 2: UTILIZING THE PORTABLE TRAFFIC SIGNAL SYSTEM, REMOVE THE EXISTING BRIDGE, AND CONSTRUCT THE REMAINDER OF THE PROPOSED CULVERT AND ROADWAY APPROACHES BEHIND THE DRUMS AND TEMPORARY GUARDRAIL.

STEP 3: AWAY FROM TRAFFIC, PLACE THE FINAL LAYER OF SURFACE COURSE AND FINAL PAVEMENT MARKINGS, USING FLAGGER OPERATIONS AS NEEDED. UPON COMPLETION OF PROPOSED CULVERT AND ROADWAY APPROACHES, REMOVE ALL TRAFFIC CONTROL DEVICES, OBLITERATE ANY CONFLICTING PAVEMENT MARKINGS, AND OPEN SR 1102 TO FINAL TRAFFIC PATTERN.

RS&H

APPROVED:_____ DATE:_____

NORTH CAROLINA PROFESSIONAL SEAL 042357 ENGINEER ALLISON C. DRAKE

Docu Signed by: Allison Drake 7FB8BA2C9D442E... 10/28/2016

DIVISION OF HIGHWAYS STATE OF NORTH CAROLINA DEPARTMENT OF TRANSPORTATION WORK ZONE TRAFFIC CONTROL

PHASING

10/27/2015
R:\Traffic\B4792_TC_TMP.dgn
9:25:47 AM

DocuSign Envelope ID: A87BB1CC-193C-453E-B835-A1C31CA4A2E0

PROJ. REFERENCE NO.	SHEET NO.
B-4792	TMP-5

TEMPORARY SHORING NOTES

Shoring Location No. 1

FOR TEMPORARY SHORING AND POSITIVE PROTECTION FOR TEMPORARY SHORING, SEE PLANS AND TEMPORARY SHORING PROVISION.

BEFORE BEGINNING TEMPORARY SHORING DESIGN OR CONSTRUCTION, SURVEY EXISTING GROUND ELEVATIONS IN THE VICINITY OF SHORING LOCATIONS TO DETERMINE ACTUAL SHORING HEIGHTS.

DESIGN TEMPORARY SHORING FROM STATION 12+29.00 –L- +/-, .5 FT. RT., TO STATION 12+63.00 –L- +/-, 3.8 FT RT., FOR THE FOLLOWING ASSUMED SOIL PARAMETERS AND GROUNDWATER ELEVATION:

UNIT WEIGHT (γ) = 120 LB/CF
FRICTION ANGLE (ϕ) = 30 DEGREES
COHESION (c) = 0 LB/SF
GROUNDWATER ELEVATION = 1477 FT

LIMITED SUBSURFACE INFORMATION IS AVAILABLE IN THE VICINITY OF TEMPORARY SHORING FROM STATION 12+29.00 –L- +/-, .5 FT. RT., TO STATION 12+63.00 –L- +/-, 3.8 FT RT. THE INFORMATION PROVIDED FOR TEMPORARY SHORING DESIGN WAS ASSUMED AND MAY NOT BE APPLICABLE TO THE ACTUAL SITE CONDITIONS ENCOUNTERED DURING CONSTRUCTION.

DRIVEN PILING FOR TEMPORARY SHORING FROM STATION 12+29.00 –L- +/-, .5 FT. RT., TO STATION 12+63.00 –L- +/-, 3.8 FT MAY NOT PENETRATE BELOW ELEVATION 1465 FT DUE TO OBSTRUCTIONS, VERY DENSE OR HARD SOIL, BOULDERS OR WEATHERED OR HARD ROCK.

AT THE CONTRACTOR'S OPTION, USE STANDARD SHORING FOR TEMPORARY SHORING STATION 12+29.00 –L- +/-, .5 FT. RT., TO STATION 12+63.00 –L- +/-, 3.8 FT. SEE STANDARD DETAIL NO. 1801.01 FOR STANDARD TEMPORARY SHORING AND 1801.02 FOR STANDARD TEMPORARY WALLS.

Shoring Location No. 2

FOR TEMPORARY SHORING AND POSITIVE PROTECTION FOR TEMPORARY SHORING, SEE PLANS AND TEMPORARY SHORING PROVISION.

BEFORE BEGINNING TEMPORARY SHORING DESIGN OR CONSTRUCTION, SURVEY EXISTING GROUND ELEVATIONS IN THE VICINITY OF SHORING LOCATIONS TO DETERMINE ACTUAL SHORING HEIGHTS.

DESIGN TEMPORARY SHORING FROM STATION 12+87.00 –L- +/-, 3.4 FT. RT., TO STATION 13+19.00 –L- +/-, .5 FT RT., FOR THE FOLLOWING ASSUMED SOIL PARAMETERS AND GROUNDWATER ELEVATION:

UNIT WEIGHT (γ) = 120 LB/CF
FRICTION ANGLE (ϕ) = 30 DEGREES
COHESION (c) = 0 LB/SF
GROUNDWATER ELEVATION = 1477 FT

LIMITED SUBSURFACE INFORMATION IS AVAILABLE IN THE VICINITY OF TEMPORARY SHORING FROM STATION 12+87.00 –L- +/-, 3.4 FT. RT., TO STATION 13+19.00 –L- +/-, .5 FT RT. THE INFORMATION PROVIDED FOR TEMPORARY SHORING DESIGN WAS ASSUMED AND MAY NOT BE APPLICABLE TO THE ACTUAL SITE CONDITIONS ENCOUNTERED DURING CONSTRUCTION.

AT THE CONTRACTOR'S OPTION, USE STANDARD SHORING FOR TEMPORARY SHORING STATION 12+87.00 –L- +/-, 3.4 FT. RT., TO STATION 13+19.00 –L- +/-, .5 FT RT. SEE STANDARD DETAIL NO. 1801.01 FOR STANDARD TEMPORARY SHORING AND 1801.02 FOR STANDARD TEMPORARY WALLS.

Shoring Location No. 3

FOR TEMPORARY SHORING AND POSITIVE PROTECTION FOR TEMPORARY SHORING, SEE PLANS AND TEMPORARY SHORING PROVISION.

BEFORE BEGINNING TEMPORARY SHORING DESIGN OR CONSTRUCTION, SURVEY EXISTING GROUND ELEVATIONS IN THE VICINITY OF SHORING LOCATIONS TO DETERMINE ACTUAL SHORING HEIGHTS.

DESIGN TEMPORARY SHORING FROM STATION 12+61.00 –L- +/-, .5 FT RT, TO STATION 12+89.00 –L- +/-, .5 FT RT., FOR THE FOLLOWING ASSUMED SOIL PARAMETERS AND GROUNDWATER ELEVATION:

UNIT WEIGHT (γ) = 120 LB/CF
FRICTION ANGLE (ϕ) = 30 DEGREES
COHESION (c) = 0 LB/SF
GROUNDWATER ELEVATION = 1477 FT

LIMITED SUBSURFACE INFORMATION IS AVAILABLE IN THE VICINITY OF TEMPORARY SHORING FROM STATION 12+61.00 –L- +/-, .5 FT RT, TO STATION 12+89.00 –L- +/-, .5 FT RT. THE INFORMATION PROVIDED FOR TEMPORARY SHORING DESIGN WAS ASSUMED AND MAY NOT BE APPLICABLE TO THE ACTUAL SITE CONDITIONS ENCOUNTERED DURING CONSTRUCTION.

AT THE CONTRACTOR'S OPTION, USE STANDARD SHORING FOR TEMPORARY SHORING STATION 12+61.00 –L- +/-, .5 FT RT, TO STATION 12+89.00 –L- +/-, .5 FT RT. SEE STANDARD DETAIL NO. 1801.02 FOR STANDARD TEMPORARY WALLS.

RS&H

APPROVED:_____ DATE:_____

NORTH CAROLINA PROFESSIONAL SEAL 29860 ENGINEER LORAINE C. CLARK
DocuSigned by:
4/4/2016

DIVISION OF HIGHWAYS STATE OF NORTH CAROLINA DEPARTMENT OF TRANSPORTATION WORK ZONE TRAFFIC CONTROL

TEMPORARY SHORING

10/27/2015
R:\Traffic\B4792_TC_TMP.dgn
9:32:34 AM

DocuSign Envelope ID: A87BB1CC-193C-453E-B835-A1C31CA4A2E0

PROJ. REFERENCE NO.	SHEET NO.
B-4792	TMP-6

PHASE I DETAIL

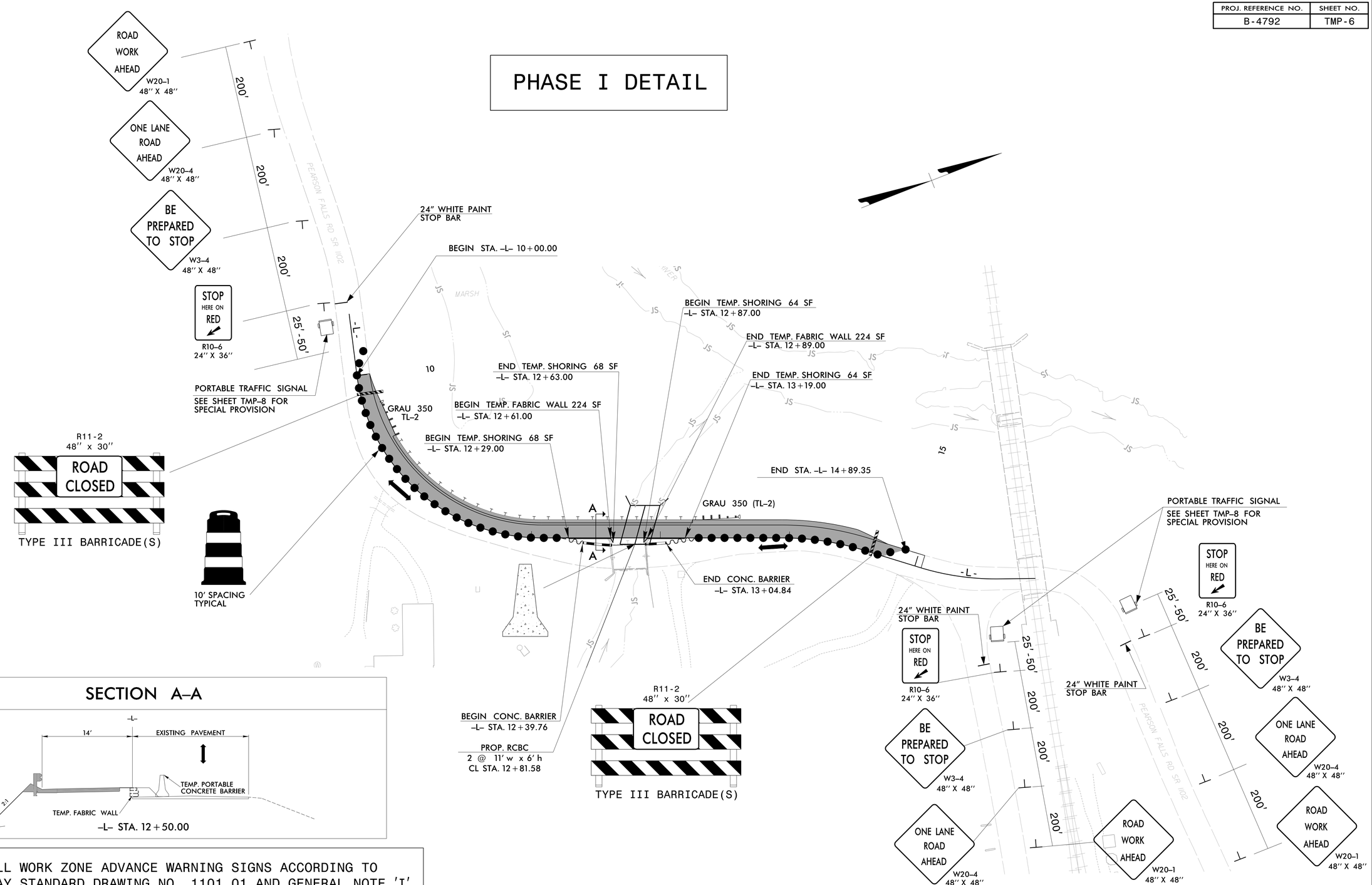

SECTION A–A

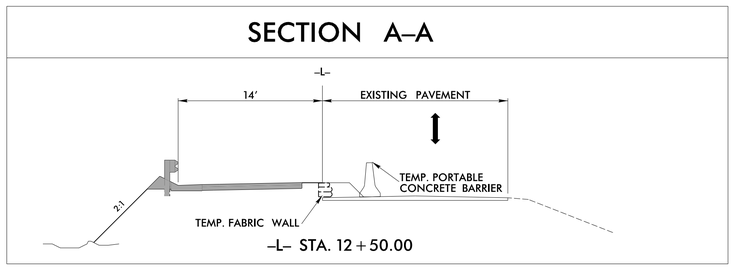

INSTALL WORK ZONE ADVANCE WARNING SIGNS ACCORDING TO ROADWAY STANDARD DRAWING NO. 1101.01 AND GENERAL NOTE 'I'. UTILIZE ROADWAY STANDARD DRAWING NO. 1101.02, SHEET 14 OF 15 FOR OPERATIONS REQUIRING A TEMPORARY LANE CLOSURE AS IDENTIFIED IN GENERAL NOTES 'C' AND 'D'. SEE ROADWAY DESIGN PLANS FOR MOT TYPICAL SECTIONS. USE ANCHORED PORTABLE CONCRETE BARRIER ACROSS EXISTING BRIDGE AND PROPOSED CULVERT AND WITHIN 20' OF THE APPROACHES TO BOTH.

RS&H

APPROVED: _____ DATE: _____

NORTH CAROLINA PROFESSIONAL SEAL 042357 ENGINEER ALLISON C. DRAKE

DocuSigned by: Allison C. Drake 11/28/2016

DIVISION OF HIGHWAYS STATE OF NORTH CAROLINA DEPARTMENT OF TRANSPORTATION WORK ZONE TRAFFIC CONTROL

TEMPORARY TRAFFIC CONTROL DETAIL

11/9/2015
R:\Traffic\B4792_TC_TMP.dgn
11:32:09 AM

DocuSign Envelope ID: A87BB1CC-193C-453E-B835-A1C31CA4A2E0

PROJ. REFERENCE NO.	SHEET NO.
B-4792	TMP-7

PHASE II DETAIL

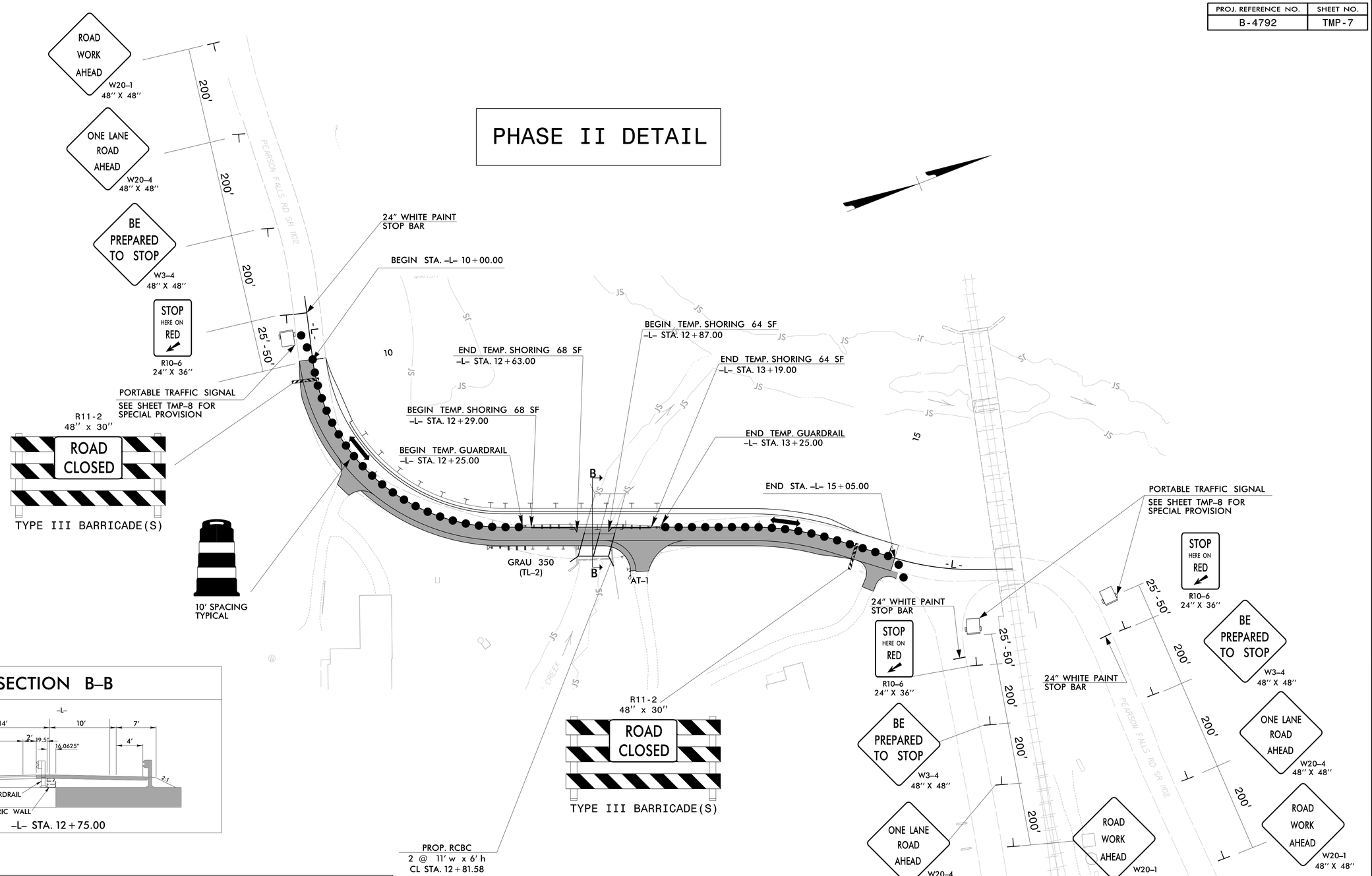

SECTION B–B

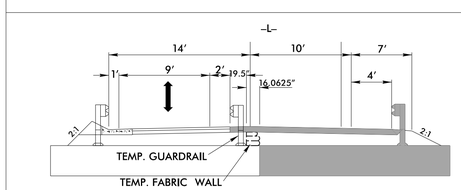

-L- STA. 12+75.00

INSTALL WORK ZONE ADVANCE WARNING SIGNS ACCORDING TO ROADWAY STANDARD DRAWING NO. 1101.01 AND GENERAL NOTE 'I'. UTILIZE ROADWAY STANDARD DRAWING NO. 1101.02, SHEET 14 OF 15 FOR OPERATIONS REQUIRING A TEMPORARY LANE CLOSURE AS IDENTIFIED IN GENERAL NOTES 'C' AND 'D'. SEE ROADWAY DESIGN PLANS FOR MOT TYPICAL SECTIONS. BOLT TEMPORARY GUARDRAIL TO PROPOSED CULVERT IN AREA OF EXISTING BRIDGE AND WITHIN 20' OF THE APPROACHES.

11/9/2015
R:\Traffic\B4792_TC_TMP.dgn
3:52:03 PM

RS&H

APPROVED:_____ DATE:_____

NORTH CAROLINA PROFESSIONAL SEAL 042857 ENGINEER ALLISON C. DRAKE
DocuSigned by: 11/28/2016

DIVISION OF HIGHWAYS
STATE OF NORTH CAROLINA
DEPARTMENT OF TRANSPORTATION
WORK ZONE TRAFFIC CONTROL

TEMPORARY TRAFFIC CONTROL DETAIL

DocuSign Envelope ID: A87BB1CC-193C-453E-B835-A1C31CA4A2E0

PROJ. REFERENCE NO.	SHEET NO.
B-4792	TMP-8

PORTABLE TRAFFIC SIGNAL SYSTEM SPECIAL PROVISION

16. PORTABLE TRAFFIC SIGNAL SYSTEM

16.1. DESCRIPTION

Furnish, install, place in operation, repair, maintain, relocate, and remove portable traffic signal systems. Comply with the provisions of Section 1700 of the 2012 *Standard Specifications for Roads and Structures.*

16.2. MATERIALS

Furnish material, equipment, and hardware under this section that is pre-approved on the ITS and Signals QPL.

Provide a complete portable traffic signal system that is totally mobile and capable of being relocated as traffic conditions demand. Design the system for operation both with and without an external power source. Furnish two signal control trailers with two vehicle signal heads per trailer and one operator unit for each portable traffic signal system. Furnish transmitters, generators, batteries, controls, back-up systems and all other components necessary to operate the system.

Ensure each system meets the physical display and operational requirements of conventional traffic signals as specified in PART IV of the *Manual on Uniform Traffic Control Devices (MUTCD)* and the *North Carolina Supplement to the MUTCD* in effect on the date of advertisement.

Used equipment will be acceptable if the equipment is in good working condition. Contractor retains ownership of the portable traffic signal systems.

Provide yellow 12-inch aluminum or polycarbonate vehicle signal heads with 10-inch tunnel visors, backplates and Light Emitting Diode (LED) modules. Provide aluminum signal heads and backplates listed on the Department's Qualified Products List (QPL) for traffic signal equipment. Provide polycarbonate signal heads and visors that comply with the provisions pertaining to Signal Heads within these *Project Special Provisions* with the following exceptions:

Fabricate signal head housings, end caps, and visors from virgin polycarbonate material. Provide U.V. stabilized polycarbonate plastic with a minimum thickness of 0.1 ± 0.01 inches that is highway yellow (Federal Standard 595C, Color Chip 13538). Ensure the color is incorporated into the plastic material before molding the signal head housings and end caps. Ensure the plastic formulation provides the following physical properties in the assembly (tests may be performed on separately molded specimens):

Test	Required	Method
Specific Gravity	1.17 minimum	ASTM D 792
Vicat Softening Temperature, ºF	305-325	ASTM D 1525
Brittleness Temperature, ºF	Below –200	ASTM D 746
Flammability	Self-extinguishing	ASTM D 635
Tensile Strength, yield, PSI	8500 minimum	ASTM D 638
Elongation at yield, %	5.5-8.5	ASTM D 638
Shear, strength, yield, PSI	5500 minimum	ASTM D 732
Izod impact strength, ft-lb/in [notched, 1/8 inch]	15 minimum	ASTM D 256
Fatigue strength, PSI at 2.5 mm cycles	950 minimum	ASTM D 671

To minimize signal head movement due to wind, mount top and bottom of signal heads to the signal head supports.

Provide 120V AC powered LED modules listed on the QPL, or provide 12V DC powered LED modules that meet the *ITE VTCSH Part 2: Light Emitting Diode (LED) Vehicle Signal Modules (Interim Purchase Specification)* with the exception of paragraphs 5.2, 5.3, 5.7, and testing associated with 120V AC. Ensure DC powered LED modules operate with input power between 9V DC and 15V DC.

Provide trailers that have durable paint in highway orange, Federal Standard 595C Color Chip ID # 12473 with a minimum paint thickness of 2.5 mils.

Provide trailers with a 12-volt trailer lighting system complying with *Federal Motor Carrier Safety Regulations 393*, safety chains, and a 2-inch ball hitch. When provided, locate generators, fuel tanks, batteries and electronic controls in protective housings that are provided with locks to restrict access.

Design the trailer assembly and signal supports to withstand an 80 MPH wind load with the signal supports raised in the operating position. Provide independent certification from a registered Professional Engineer that the assembly meets this 80 MPH wind load requirement. Provide a reliable hydraulic, electric or manual means for raising and lowering the signal support members. Provide screw-type stabilizing and leveling devices with a self-leveling foot to support the unit in the operating position on slopes 1V:3H or flatter when detached from the transporting vehicle.

During manual operation, ensure the system provides a means of informing the operator of signal indications, such as a light on the back of each signal head that illuminates when the signal displays a red indication.

Design the portable traffic signal system to perform without interruption during the time it is in operation.

Where a traffic actuated system is required, provide a system control unit that is capable of pre-timed operation, traffic actuated operation, a variable green time interval dependent upon vehicle actuations, and programmable yellow clearance and red clearance intervals. Furnish all sensors to

monitor vehicle demands for vehicle actuation per the Project Special Provisions and Section 1098 of the Standard Specifications.

Design the systems to be fail-safe. Ensure the system monitors the following conditions: lack of green, yellow, and red signal indication voltage, total loss of indication on any approach, presence of multiple signal indications on any approach, conflicting green/yellow signal indications, and low power condition. In the event any of these conditions are detected, immediately begin flashing operation of red indications in all directions.

Provide either hard-wired, microwave, or radio controlled type communications for pre-timed and traffic actuated portable traffic signal systems. In the event a loss of communication is detected, immediately begin flashing operation of red indications in all directions.

Ensure systems that use wireless communication links continuously monitor and verify proper transmission and reception of data used to monitor and control each signal head. Ensure ambient mobile or other radio transmissions or adverse weather conditions do not affect the system. Encode signal transmissions digitally to protect radio transmissions from interference. Do not violate FCC regulations and ensure radio frequencies are appropriate for portable signal equipment applications.

Upon detecting a malfunction, ensure all signals go to a flashing red condition and the operator is notified by a reliable means approved by the Engineer. Provide a battery back-up system for generator and direct current powered signal systems to power the warning means and "flashing red" condition. Provide a back-up system with a 72-hour minimum reserve.

Ensure the system meets the Environmental Standards for traffic signals in accordance with NEMA TS-1, Section 2.

16.3. CONSTRUCTION METHODS

Do not use portable traffic signal systems in a work area with intersecting streets or driveways, unless directed by the Engineer.

Do not install portable traffic signal within 300 feet of at-grade railroad crossing.

During automatic operation, ensure the motorist has an unobstructed view of opposing traffic.

Ensure the distance between signal units does not exceed 500 feet unless otherwise shown on the plans or directed by the Engineer. If modification to the distance between signal units is required after the units are positioned, relocate the signals or the system and make the necessary timing revisions only as directed by the Engineer.

Submit a traffic signal timing plan to the Engineer for approval a minimum of two weeks prior to installation. Include the following items in the plan: distance between stop bars, speed limit to be posted during operation, each approach grade, recommended yellow change interval, recommended red clearance interval, recommended minimum and maximum green intervals. Make timing changes to approved signal timing plan only as authorized by the Engineer. Keep a written record of all timing changes.

Allow only trained operators to set up and operate the system. Provide an experienced operator at all times for each portable traffic signal system during periods of manual operation. Do not violate yellow change and red clearance intervals during periods of manual operation. During manual operation, ensure the operator has an unobstructed view of the motorists and all signal head units. Locate the operator as close to the center of the operation as possible.

Perform all maintenance operations required by the system manufacturer including periodic cleaning of the systems. Ensure properly skilled and trained maintenance personnel are available to maintain the system in good working order and to perform all emergency and preventive maintenance as recommended by the system manufacturer.

Furnish the Engineer with the name, office telephone number, cellular (mobile) telephone number, and pager number of the supervisory employee who will be responsible for maintenance and repair of equipment during all hours.

For all failures, malfunctions, or damage to this equipment, begin necessary repairs within four hours of notification. Complete repairs within eight hours of notification. Comply with Section 150 of the Standard Specifications for maintenance of traffic flow. The inability to contact the supervisory employee or prearranged alternate will not extend repair time requirements.

In the event that the system becomes inoperative, be prepared at all times to revert to flagging operations or suspend all construction activities requiring the use of the portable traffic signal system until the system is restored to proper operation. Implement flagging operations as shown on 2012 Roadway Standard Drawing No. 1101.02 Sheet 1 (Closure of one lane of a Two-lane, Two-way Highway).

When not in operation, remove signal heads from the view of traffic or cover signal heads with burlap bags or bags made of non-ripping material specifically designed for covering signal heads. Do not use trash bags of any type. Remove, cover, fold, or turn all inappropriate signs so that they are not readable by oncoming traffic.

16.4. MEASUREMENT AND PAYMENT

Actual number of portable traffic signal systems furnished, installed, operated, removed, and accepted.

No measurement will be made for operation, relocation, maintenance, removal of each system, or use of flaggers during repair periods as these will be considered incidental to furnishing, installing, and operating the portable traffic signal systems.

No measurement will be made for signal controller, communication cable, messenger cable, wireless communication, inductive loop sawcut, loop emulator detection system, machine vision detection system, microwave detection system, detector channel/unit, detector lead-in cable, trenching, vehicle signal heads, signal head support assemblies, signal cable, and traffic signal software as these will be considered incidental to furnishing, installing, and operating the portable traffic signal systems.

Payment will be made under:

Portable Traffic Signal System (actuated) ..... Each
Portable Traffic Signal System (pre-timed) ..... Each

RS&H

APPROVED:_____ DATE:_____

NORTH CAROLINA PROFESSIONAL SEAL 042257 ENGINEER ALLISON C. DRAKE
DocuSigned by: Allison Drake
10/28/2016

DIVISION OF HIGHWAYS STATE OF NORTH CAROLINA DEPARTMENT OF TRANSPORTATION WORK ZONE TRAFFIC CONTROL

SPECIAL PROVISION

10/27/2015
R:\Traffic\B4792_TC_TMP.dgn
9:35:40 AM

DocuSign Envelope ID: A87BB1CC-193C-453E-B835-A1C31CA4A2E0

PROJ. REFERENCE NO.	SHEET NO.
B-4792	TMP-9

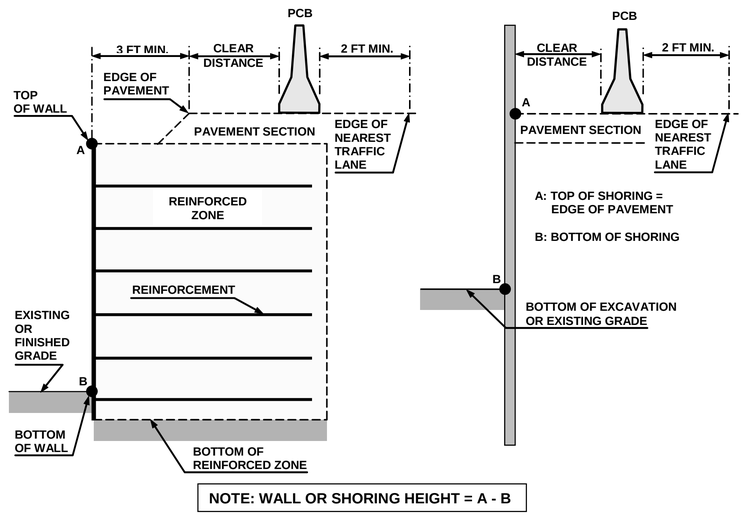

FIGURE A

NOTES

1- REFER TO THE TRAFFIC CONTROL PLANS FOR TEMPORARY SHORING LOCATIONS AND NOTES.

2- REFER TO THE "TEMPORARY SHORING" PROJECT SPECIAL PROVISION FOR INFORMATION ABOUT TEMPORARY SHORING AND PORTABLE CONCRETE BARRIER (PCB).

3- PCB IS REQUIRED IF TEMPORARY SHORING IS LOCATED WITHIN THE CLEAR ZONE IN ACCORDANCE WITH THE AASHTO ROADSIDE DESIGN GUIDE. DO NOT PLACE BARRIER DIRECTLY ON ANY SURFACE OTHER THAN ASPHALT OR CONCRETE. (CONTACT NCDOT PAVEMENT MANAGEMENT UNIT FOR APPLICABLE PAVEMENT DESIGN).

4- BASED ON THE CLEAR DISTANCE, OFFSET, DESIGN SPEED AND PAVEMENT TYPE, CHOOSE AN UNANCHORED OR ANCHORED PCB FROM THE TABLE SHOWN IN FIGURE B. CLEAR DISTANCE IS DEFINED AS SHOWN IN FIGURE A AND OFFSET IS DEFINED AS SHOWN IN FIGURE B.

5- AT THE CONTRACTOR'S OPTION OR IF THE MINIMUM REQUIRED CLEAR DISTANCE IS NOT AVAILABLE, SET PCB NEXT TO AND UP AGAINST THE TRAFFIC SIDE OF THE TEMPORARY SHORING EXCEPT FOR BARRIER ABOVE TEMPORARY WALLS. PCB WITH THE MINIMUM REQUIRED CLEAR DISTANCE IS REQUIRED ABOVE TEMPORARY WALLS.

6- USE NCDOT PORTABLE CONCRETE BARRIER (PCB) IN ACCORDANCE WITH ROADWAY STANDARD DRAWING NO. 1170.01 AND SECTION 1170 OF THE STANDARD SPECIFICATIONS.

7- PCB REQUIREMENTS FOR TEMPORARY WALLS APPLY TO TEMPORARY MECHANICALLY STABILIZED EARTH (MSE) WALLS AND TEMPORARY SOIL NAIL WALLS.

8- SET PCB WITH A MINIMUM HORIZONTAL DISTANCE OF 2 FT BETWEEN THE FRONT FACE OF THE BARRIER AND THE EDGE OF THE NEAREST TRAFFIC LANE AS SHOWN IN FIGURE A UNLESS OTHERWISE SHOWN IN THE PLANS AND OR AS APPROVED BY THE ENGINEER.

9- FOR PCB ABOVE AND BEHIND TEMPORARY WALLS, PROVIDE A MINIMUM DISTANCE OF 3 FT BETWEEN THE EDGE OF PAVEMENT AND THE WALL FACE AS SHOWN IN FIGURE A. IF THESE MINIMUM REQUIRED DISTANCES ARE NOT AVAILABLE, CONTACT THE ENGINEER.

10- TABLE SHOWN IN FIGURE B IS BASED ON NCDOT RESEARCH PROJECT NO. 2005-010 WITH VEHICLE TYPE USED FOR NCHRP 350 CRASH TESTS. BARRIER DEFLECTIONS AND RESULTING MINIMUM REQUIRED CLEAR DISTANCES MIGHT VARY SIGNIFICANTLY FOR LARGER HEAVIER VEHICLES, RUNS OF BARRIER LESS THAN 200 FT IN LENGTH AND WET OR DRY PAVEMENT.

MINIMUM REQUIRED CLEAR DISTANCE, inches

Barrier Type	Pavement Type	Offset * ft	Design Speed, mph <30	31-40	41-50	51-60	61-70	71-80
Unanchored PCB	Asphalt	<8	24	26	29	32	36	40
		8-14	26	28	31	35	38	42
		14-20	27	29	34	36	39	43
		20-26	28	31	35	38	40	44
		26-32	29	32	36	39	42	45
		32-38	30	34	38	41	43	46
		38-44	31	34	41	43	45	48
		44-50	31	35	41	43	46	49
		50-56	32	36	42	44	47	50
		>56	32	36	42	45	47	51
	Concrete	<8	17	18	21	22	25	26
		8-14	19	20	23	25	26	29
		14-20	22	22	24	26	28	31
		20-26	23	24	26	27	30	34
		26-32	24	25	27	28	32	35
		32-38	24	26	27	30	33	36
		38-44	25	26	28	30	34	37
		44-50	26	26	28	32	35	37
		50-56	26	26	28	32	35	38
		>56	26	27	29	32	36	38
Anchored PCB	Asphalt	All Offsets	24 for All Design Speeds					
Anchored PCB	Concrete (including bridge approach slabs)	All Offsets	12 for All Design Speeds					

* See Figure Below

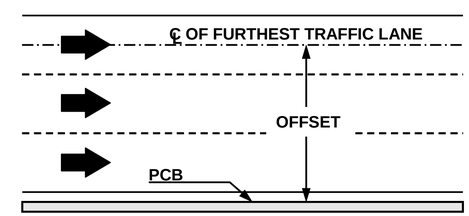

FIGURE B

RS&H

APPROVED:_____ DATE:_____

NORTH CAROLINA PROFESSIONAL SEAL 042357 ENGINEER ALLISON C. DRAKE

DocuSigned by: Allison C. Drake 10/28/2016

DIVISION OF HIGHWAYS STATE OF NORTH CAROLINA DEPARTMENT OF TRANSPORTATION WORK ZONE TRAFFIC CONTROL

PORTABLE CONCRETE BARRIER AT TEMPORARY SHORING LOCATIONS

10/27/2015
R:\Traffic\B4792_TC_TMP.dgn
9:36:40 AM

DocuSign Envelope ID: A87BB1CC-193C-453E-B835-A1C31CA4A2E0

T.I.P.: B-4792

CONTRACT:

PROJECT REFERENCE NO.	SHEET NO.
B-4792	PMP-1

APPROVED: DocuSigned by: Ron King — 13E7AF7B9AA4448...

DATE: 10/13/2015

SEAL

NORTH CAROLINA PROFESSIONAL SEAL 022959 ENGINEER RONALD W. KING

STATE OF NORTH CAROLINA
DEPARTMENT OF TRANSPORTATION

PAVEMENT MARKING PLAN
POLK

LOCATION: BRIDGE NO.4 OVER FORK CREEK (SMALL BRANCH OF PACOLET RIVER) ON SR 1102

ROADWAY STANDARD DRAWING

THE FOLLOWING ROADWAY STANDARDS AS APPEAR IN "ROADWAY STANDARD DRAWINGS" - PROJECT SERVICES UNIT - N.C. DEPARTMENT OF TRANSPORTATION - RALEIGH, N.C., DATED JANUARY 2012 ARE APPLICABLE TO THIS PROJECT AND BY REFERENCE HEREBY ARE CONSIDERED A PART OF THESE PLANS:

STD. NO.	TITLE
1205.01	PAVEMENT MARKINGS - LINE TYPES AND OFFSETS
1205.02	PAVEMENT MARKINGS - TWO-LANE AND MULTILANE ROADWAYS
1261.01	GUARDRAIL AND BARRIER DELINEATORS - INSTALLATION SPACING
1261.02	GUARDRAIL AND BARRIER DELINEATORS - TYPES AND MOUNTING
1262.01	GUARDRAIL END DELINEATION

INDEX

SHEET NO.	DESCRIPTION
PMP-1	PAVEMENT MARKING PLAN TITLE AND SCHEDULE SHEET

PAVEMENT MARKING SCHEDULE

	FINAL PAVEMENT MARKINGS PAINT(4")
SYMBOL	DESCRIPTION
PA	WHITE EDGLINE (2X)
PI	YELLOW DOUBLE CENTER (2X)

GENERAL NOTES

THE FOLLOWING GENERAL NOTES APPLY AT ALL TIMES FOR THE DURATION OF THE CONSTRUCTION PROJECT, EXCEPT WHEN OTHERWISE NOTED IN THE PLAN, OR DIRECTED BY THE ENGINEER.

A) INSTALL PAVEMENT MARKINGS AND PAVEMENT MARKERS ON THE FINAL SURFACE AS FOLLOWS:

ROAD NAME	MARKING	MARKER
PEARSON FALLS ROAD	PAINT	NONE

B) PLACE TWO APPLICATIONS OF PAINT PAVEMENT MARKINGS ON THE FINAL WEARING SURFACE. PLACE THE SECOND APPLICATION OF PAINT UPON SUFFICIENT DRYING TIME OF THE FIRST.

C) TIE PROPOSED PAVEMENT MARKING LINES TO EXISTING PAVEMENT MARKING LINES.

D) REMOVE/REPLACE ANY CONFLICTING/DAMAGED PAVEMENT MARKINGS AND MARKERS.

E) PASSING ZONES WILL BE DETERMINED IN THE FIELD AND MUST BE APPROVED BY THE ENGINEER.

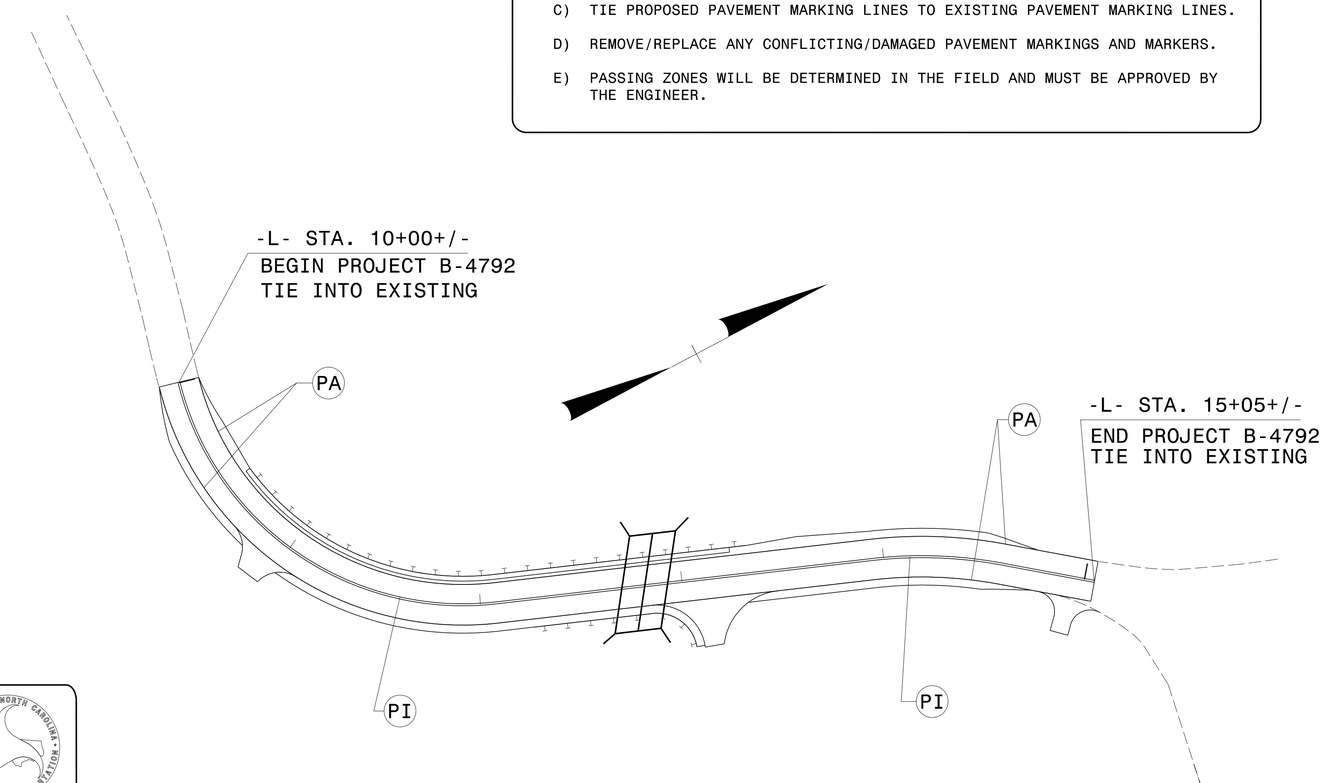

PLAN PREPARED BY: N.C.D.O.T. SIGNING AND DELINEATION UNIT

KELVIN JORDAN — SIGNING & DELINEATION REGIONAL ENGINEER

J.NAVARRETE — SIGNING & DELINEATION PROJECT DESIGN ENGINEER/TECHNICIAN

STATE OF NORTH CAROLINA DEPARTMENT OF TRANSPORTATION

10/13/2015
P:\TIPProjects-B\B4792\Traffic\Signing\CADD\Signing Layout Plans\B-4792_Sgn_PMP.dgn
User:jmnavarrete

DocuSign Envelope ID: A87BB1CC-193C-453E-B835-A1C31CA4A2E0

TIP PROJECT: B-4792

STATE	STATE PROJECT REFERENCE NO.	SHEET NO.	TOTAL SHEETS
N.C.	B-4792	EC-1	7

STATE PROJ. NO.	F. A. PROJ. NO.	DESCRIPTION

STATE OF NORTH CAROLINA
DIVISION OF HIGHWAYS

PLAN FOR PROPOSED HIGHWAY EROSION CONTROL

POLK COUNTY

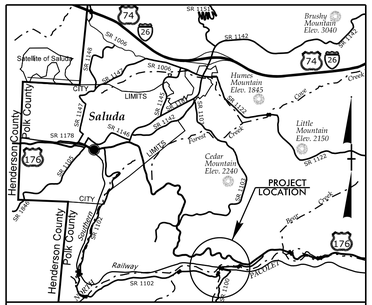

VICINITY MAP

LOCATION: REPLACEMENT OF BRIDGE No. 4 OVER FORK CREEK (A SMALL BRANCH OF PACOLET RIVER) ON SR 1102.

TYPE OF WORK: GRADING, PAVING, DRAINAGE, CULVERT.

BEGIN TIP PROJECT No. B-4792
-L- PC Sta. 9+99.74

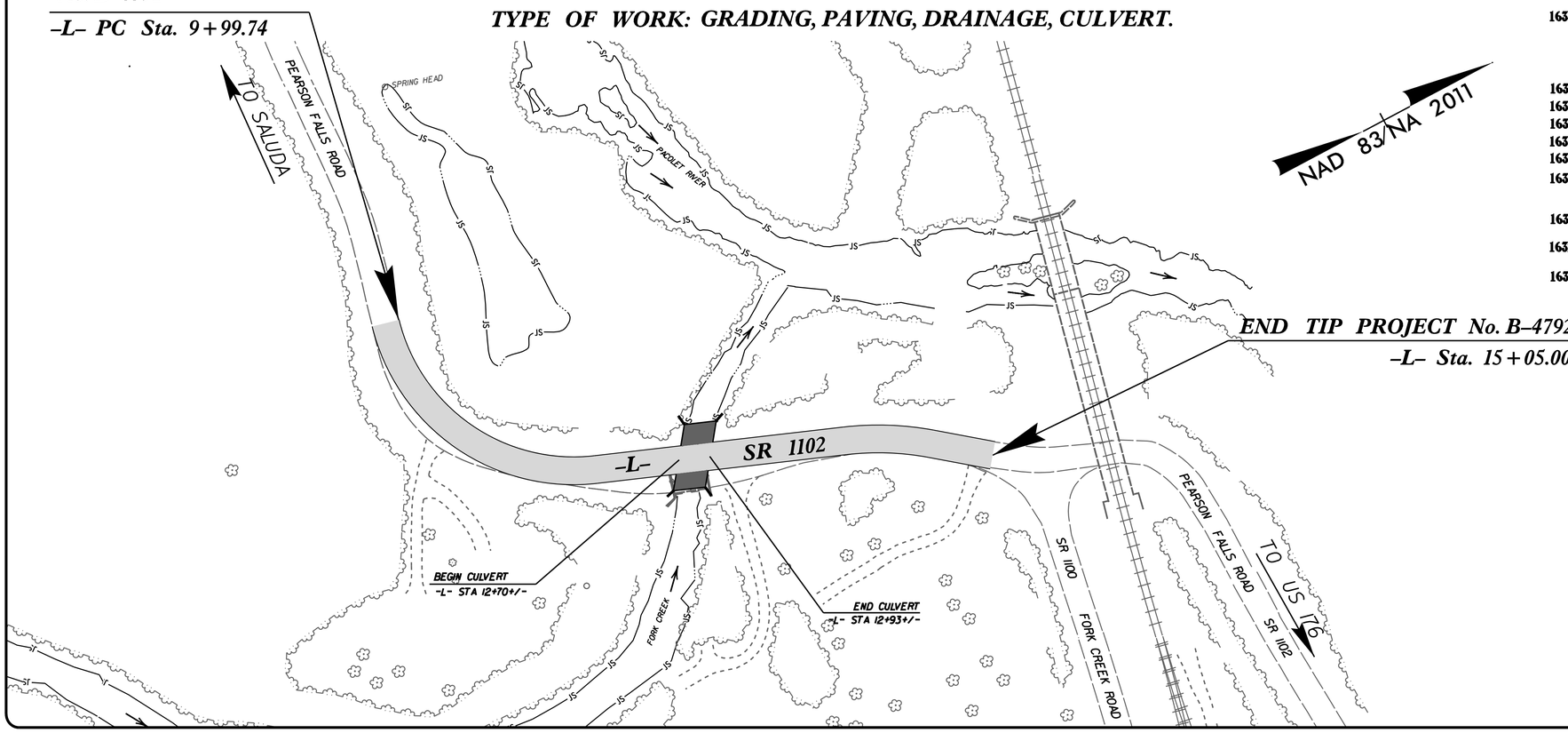

EROSION AND SEDIMENT CONTROL MEASURES

Std. #	Description	Symbol
1630.03	Temporary Silt Ditch	TSD
1630.05	Temporary Diversion	TD
1605.01	Temporary Silt Fence	
1606.01	Special Sediment Control Fence	
1622.01	Temporary Berms and Slope Drains	
1630.02	Silt Basin Type B	
1633.01	Temporary Rock Silt Check Type-A	
	Temporary Rock Silt Check Type-A with Matting and Polyacrylamide (PAM)	
1633.02	Temporary Rock Silt Check Type-B	
	Wattle/Coir Fiber Wattle	EW CW
	Wattle/Coir Fiber Wattle with Polyacrylamide (PAM)	
1634.01	Temporary Rock Sediment Dam Type-A	
1634.02	Temporary Rock Sediment Dam Type-B	
1635.01	Rock Pipe Inlet Sediment Trap Type-A	
1635.02	Rock Pipe Inlet Sediment Trap Type-B	
1630.04	Stilling Basin	
1630.06	Special Stilling Basin	
	Rock Inlet Sediment Trap:	
1632.01	Type A	A
1632.02	Type B	B
1632.03	Type C	C
	Skimmer Basin	
	Tiered Skimmer Basin	
	Infiltration Basin	

THIS PROJECT CONTAINS EROSION CONTROL PLANS FOR CLEARING AND GRUBBING PHASE OF CONSTRUCTION.

ENVIRONMENTALLY SENSITIVE AREA(S) EXIST ON THIS PROJECT

Refer To E. C. Special Provisions for Special Considerations.

THIS PROJECT HAS BEEN DESIGNED TO SENSITIVE WATERSHED STANDARDS.

GRAPHIC SCALE

25 0 50

PLANS

THESE EROSION AND SEDIMENT CONTROL PLANS COMPLY WITH THE REGULATIONS SET FORTH BY THE NCG-010000 GENERAL CONSTRUCTION PERMIT EFFECTIVE AUGUST 3, 2011 AND ISSUED BY THE NORTH CAROLINA DEPARTMENT OF ENVIRONMENT AND NATURAL RESOURCES DIVISION OF WATER RESOURCES.

Prepared in the Office of:

RS&H

1520 SOUTH BOULEVARD, SUITE 200
CHARLOTTE, NC 28203
704-752-0610

2012 STANDARD SPECIFICATIONS

Designed by:

Will Weathersbee, PE — *NAME*
3161 — *LEVEL III CERTIFICATION NO.*

Reviewed in the Office of:

ROADSIDE ENVIRONMENTAL UNIT

1 South Wilmington St.
Raleigh, NC 27611

2012 STANDARD SPECIFICATIONS

Reviewed by:

Jennifer Parish, EI, CPESC, CPSWQ

Roadway Standard Drawings

The following roadway english standards as appear in "Roadway Standard Drawings"– Roadway Design Unit – N. C. Department of Transportation – Raleigh, N. C., dated January 2012 and the latest revison thereto are applicable to this project and by reference hereby are considered a part of these plans.

1605.01	Temporary Silt Fenee	1631.01	Matting Installation
1606.01	Special Sediment Control Fenee	1632.03	Rock Inlet Sediment Trap Type C
1607.01	Gravel Construction Entrance	1633.01	Temporary Rock Silt Check Type A
1622.01	Temporary Berms and Slope Drains	1633.02	Temporary Rock Silt Check Type B
1630.06	Special Stilling Basin	1635.02	Rock Pipe Inlet Sediment Trap Type B

3/21/2016
...Polk\Project\Design\Environmental\Design\B4792_EC.dgn_tsh.dgn

DocuSign Envelope ID: A87BB1CC-193C-453E-B835-A1C31CA4A2E0

PROJECT REFERENCE NO.	SHEET NO.
B-4792	EC-2

RS&H

TEMPORARY ROCK SILT CHECK TYPE 'A' WITH EXCELSIOR MATTING AND POLYACRYLAMIDE (PAM)

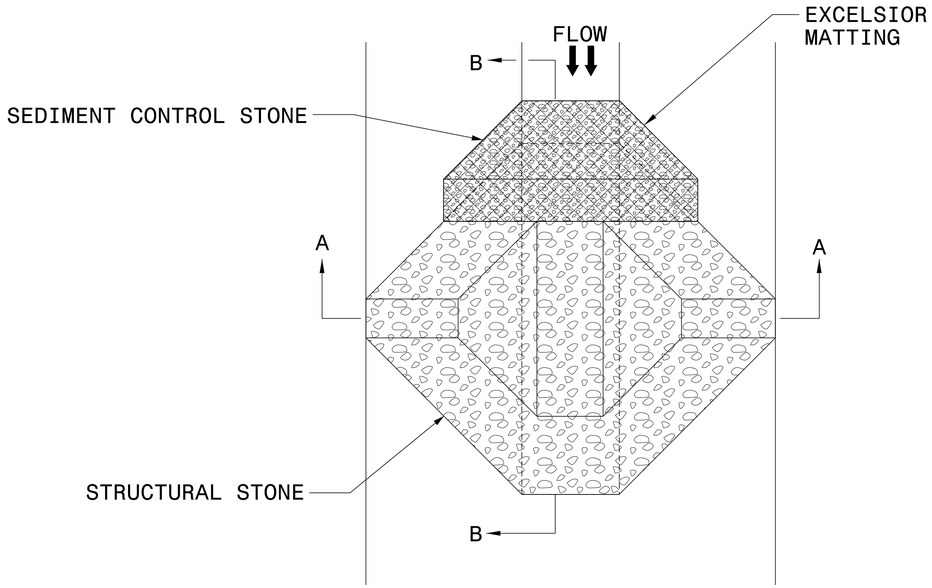

PLAN

NOTES:

INSTALL TEMPORARY ROCK SILT CHECK TYPE A IN ACCORDANCE WITH ROADWAY STANDARD DRAWING NO. 1633.01.

USE EXCELSIOR FOR MATTING MATERIAL AND ANCHOR MATTING SECTION AT TOP AND BOTTOM WITH CLASS B STONE.

PRIOR TO POLYACRYLAMIDE (PAM) APPLICATION, OBTAIN A SOIL SAMPLE FROM PROJECT LOCATION, AND FROM OFFSITE MATERIAL, AND ANALYZE FOR APPROPRIATE PAM FLOCCULANT TO BE APPLIED TO EACH ROCK SILT CHECK.

INITIALLY APPLY 4 OUNCES OF POLYACRYLAMIDE (PAM) TO TOP OF MATTING SECTION AND AFTER EVERY RAINFALL EVENT THAT EQUALS OR EXCEEDS 0.50 INCHES.

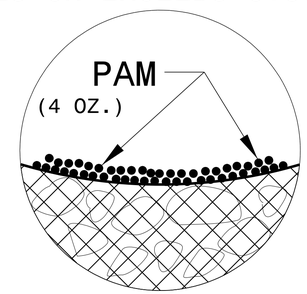

INSET A

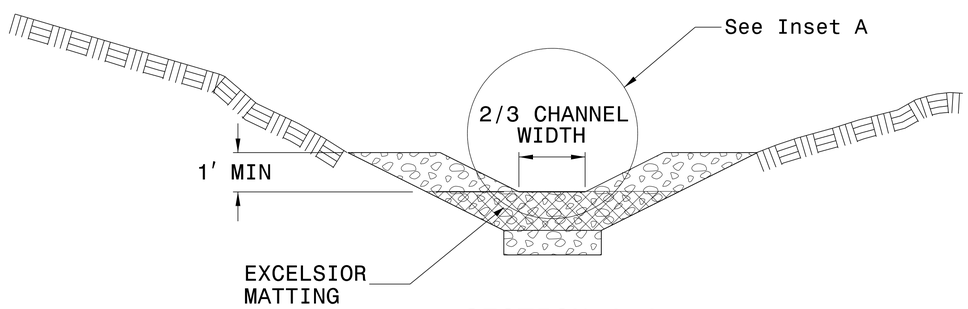

SECTION A-A

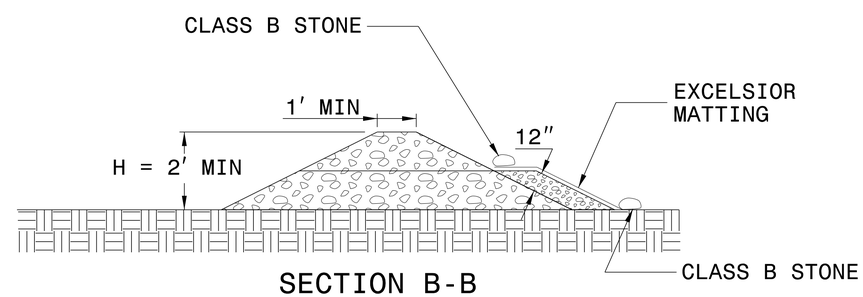

SECTION B-B

NOT TO SCALE

DocuSign Envelope ID: A87BB1CC-193C-453E-B835-A1C31CA4A2E0

PROJECT REFERENCE NO.	SHEET NO.
B-4792	EC-3

DIVISION OF HIGHWAYS
STATE OF NORTH CAROLINA

RS&H

SOIL STABILIZATION TIMEFRAMES

SITE DESCRIPTION	STABILIZATION TIME	TIMEFRAME EXCEPTIONS
PERIMETER DIKES, SWALES, DITCHES AND SLOPES	7 DAYS	NONE
HIGH QUALITY WATER (HQW) ZONES	7 DAYS	NONE
SLOPES STEEPER THAN 3:1	7 DAYS	IF SLOPES ARE 10' OR LESS IN LENGTH AND ARE NOT STEEPER THAN 2:1, 14 DAYS ARE ALLOWED.
SLOPES 3:1 OR FLATTER	14 DAYS	7 DAYS FOR SLOPES GREATER THAN 50' IN LENGTH.
ALL OTHER AREAS WITH SLOPES FLATTER THAN 4:1	14 DAYS	NONE, EXCEPT FOR PERIMETERS AND HQW ZONES.

DocuSign Envelope ID: A87BB1CC-193C-453E-B835-A1C31CA4A2E0

PROJECT REFERENCE NO.	SHEET NO.
B-4792	EC-4/CONST.4

RS&H

NAD 83/NA 2011

ENVIRONMENTALLY SENSITIVE AREA
SEE PROJECT SPECIAL PROVISIONS

NOTE:
PLACE TEMPORARY ROCK SEDIMENT DAMS TYPE – B AND TEMPORARY ROCK SILT CHECKS TYPE – A AT DRAINAGE OUTLETS.

NOTE:
UTILIZE SPECIAL STILLING BASIN AS STILLING BASIN WHERE APPLICABLE.

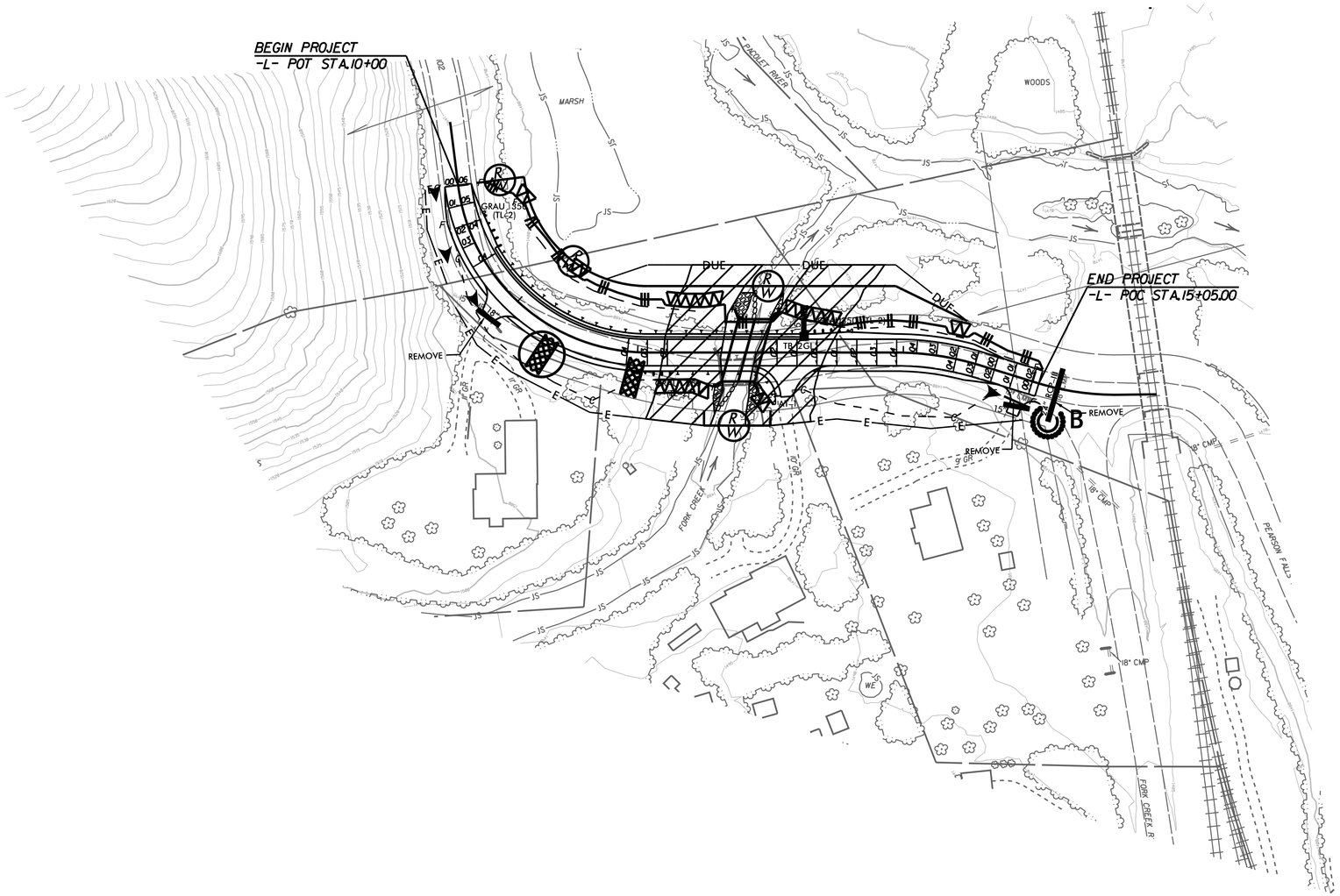

CLEARING AND GRUBBING
EROSION CONTROL FOR
CONSTRUCTION SHEET 4

REVISIONS

8/17/99

3/2/2016
X:\5\70185002-B-4792_Polk\Project Production\Design\Environmental\Design\B4792_EC_dsn_4.dgn
1:54:18 PM

DocuSign Envelope ID: A87BB1CC-193C-453E-B835-A1C31CA4A2E0

PROJECT REFERENCE NO.	SHEET NO.
B-4792	EC-5/CONST.4

CULVERT CONSTRUCTION SEQUENCE –L– STA. 12 + 82

1. UTILIZE SPECIAL STILLING BASIN(S) AS NEEDED THROUGHOUT CULVERT CONSTRUCTION.
2. STAGE 1 – CONSTRUCT IMPERVIOUS DIKES AND TEMPORARY DIVERSION CHANNEL WITH LINER AS SHOWN AND DIVERT FLOW THROUGH TEMPORARY CHANNEL AND 24" CMP.
3. CONSTRUCT PROPOSED CULVERT SECTIONS 1 AND 2 AS SHOWN.
4. REMOVE TEMPORARY DIVERSION CHANNEL AND 24" CMP. REDIRECT 24" CMP THROUGH CULVERT SECTION 1.
5. CONSTRUCT ROADWAY OVER PROPOSED CULVERT SECTIONS 1 AND 2.
6. STAGE 2 – SHIFT TRAFFIC ONTO NEWLY CONSTRUCTED ROADWAY AND CLOSE EXISTING NB LANE.
7. REMOVE EXISTING STRUCTURE AND CONSTRUCT CULVERT SECTION 3 AS SHOWN.
8. STAGE 3 – CONSTRUCT IMPERVIOUS DIKES AS SHOWN IN STAGE 3.
9. REMOVE TEMPORARY PIPE INSTALLED IN STAGE 2.
10. REMOVE IMPERVIOUS DIKES INSTALLED IN STAGE 2 AND DIVERT STREAM THROUGH CULVERT SECTIONS 2 AND 3.
11. CONSTRUCT PROPOSED CULVERT SECTION 4.
12. REMOVE IMPERVIOUS DIKES INSTALLED IN STAGE 3 AND DIVERT FLOW THROUGH PROPOSED CULVERT.
13. COMPLETE PROPOSED ROADWAY CONSTRUCTION.

STAGE 1

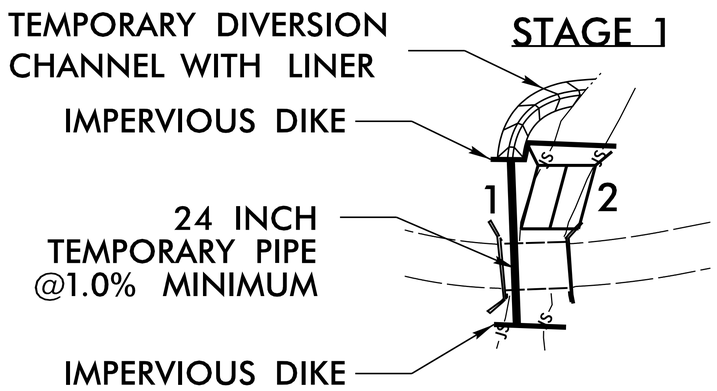

STAGE 2

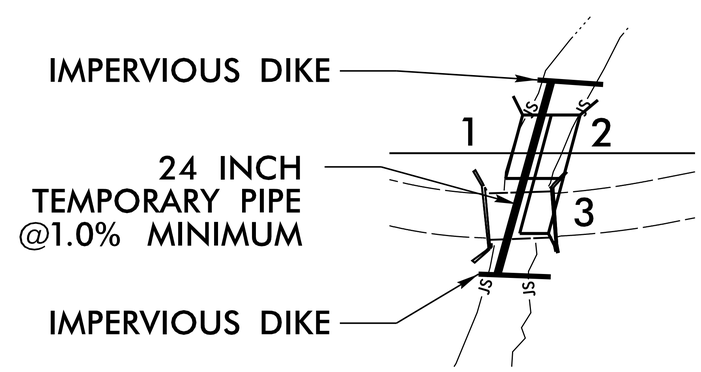

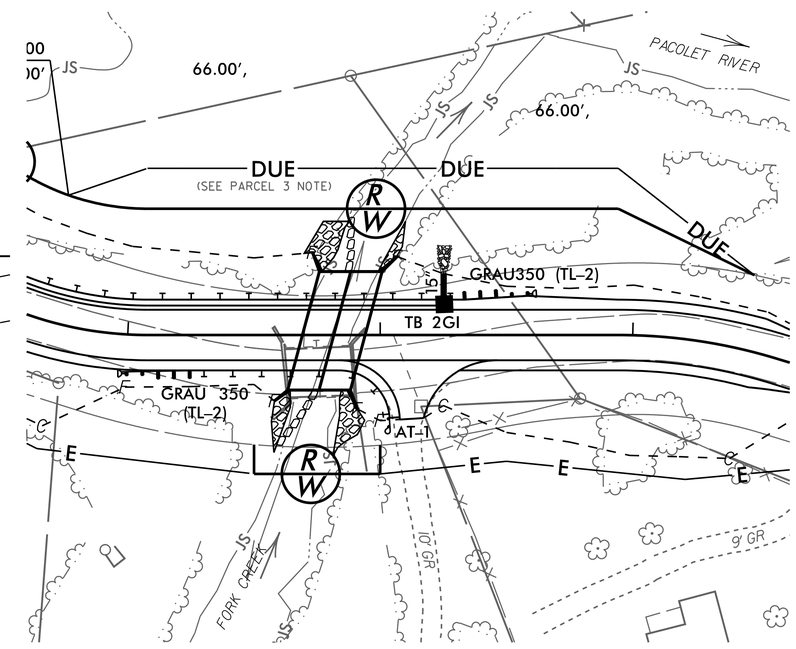

STAGE 3

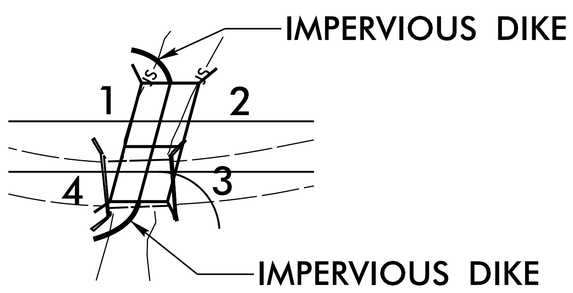

TEMPORARY DIVERSION CHANNEL

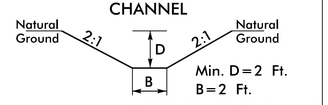

Min. D = 2 Ft.
B = 2 Ft.

Type of Liner = GEOTEXTILE (NCDOT Type 4)
EST. EXCAVATION = 25 CY

NAD 83/NA 2011

NOT TO SCALE

DocuSign Envelope ID: A87BB1CC-193C-453E-B835-A1C31CA4A2E0

PROJECT REFERENCE NO.	SHEET NO.
B-4792	EC-6/CONST.4

RS&H

NOTE:
PLACE TEMPORARY ROCK SEDIMENT DAMS TYPE – B AND TEMPORARY ROCK SILT CHECKS TYPE – A AT DRAINAGE OUTLETS.

NOTE:
UTILIZE SPECIAL STILLING BASIN AS STILLING BASIN WHERE APPLICABLE.

NAD 83/NA 2011

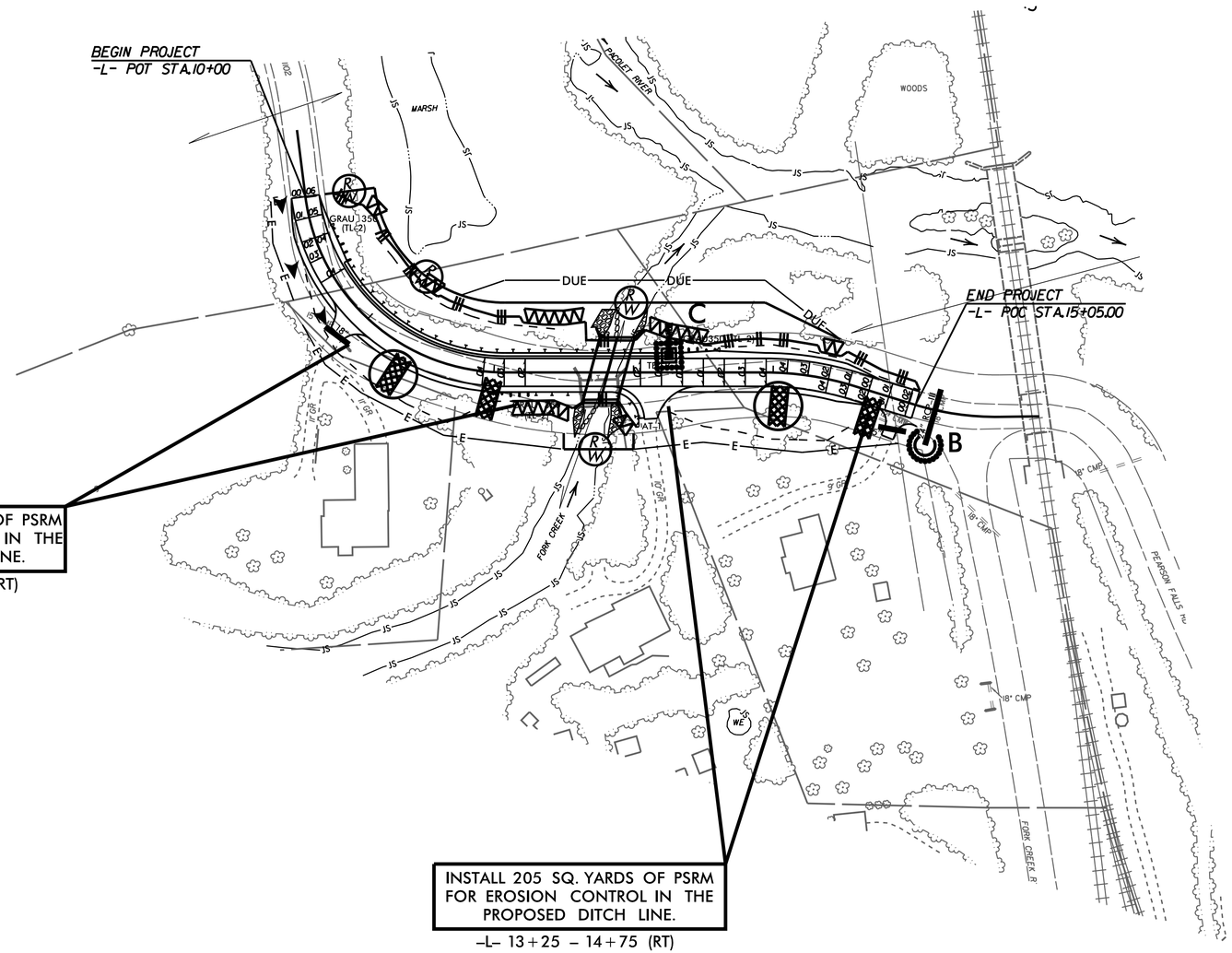

NOTES: ANY DEVIATION FROM OPTIONS GIVEN WILL REQUIRE PRIOR APPROVAL BY ENGINEER.

ADDITIONAL EROSION CONTROL DEVICES MAY NEED TO BE INSTALLED AS DIRECTED BY THE ENGINEER.

REVISIONS

8/17/99

3/21/2016
X:\Proj\0185002-B-4792_Polk\Project Production\Design\Environmental\Design\B4792_EC_dsn_6.dgn
11:58:16 PM

DocuSign Envelope ID: A87BB1CC-193C-453E-B835-A1C31CA4A2E0

STATE	STATE PROJECT REFERENCE NO.	SHEET NO.	TOTAL SHEETS
N.C.	B-4792	RF-1	
STATE PROJ. NO.	F. A. PROJ. NO.	DESCRIPTION	

PLANTING DETAILS

SEEDLING / LINER BAREROOT PLANTING DETAIL

HEALING IN

1. Locate a healing-in site in a shady, well protected area.
2. Excavate a flat bottom trench 12 inches deep and provide drainage.

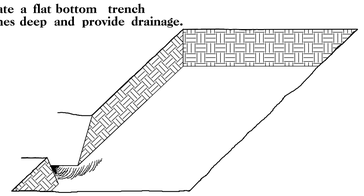

3. Backfill the trench with 2 inches well rotted sawdust. Place a 2 inch layer of well rotted sawdust at a sloping angle at one end of the trench.

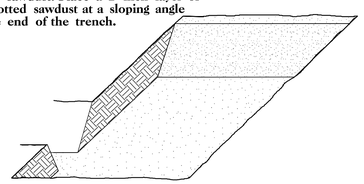

4. Place a single layer of plants against the sloping end so that the root collar is at ground level.

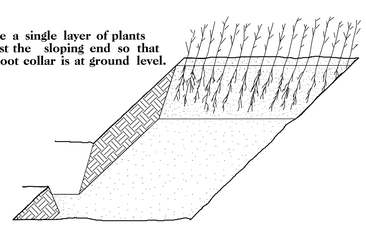

5. Place a 2 inch layer of well rotted sawdust over the roots maintaining a sloping angle.

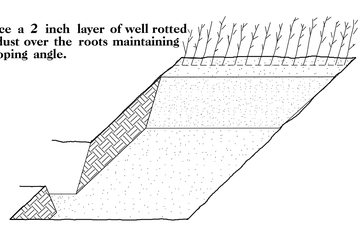

6. Repeat layers of plants and sawdust as necessary and water thoroughly.

DIBBLE PLANTING METHOD
USING THE KBC PLANTING BAR

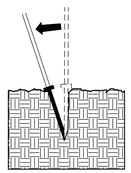

1. Insert planting bar as shown and pull handle toward planter.

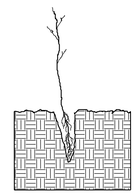

2. Remove planting bar and place seedling at correct depth.

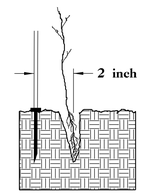

3. Insert planting bar 2 inches toward planter from seedling.

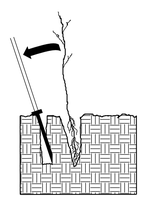

4. Pull handle of bar toward planter, firming soil at bottom.

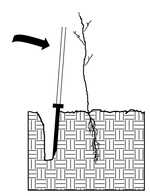

5. Push handle forward firming soil at top.

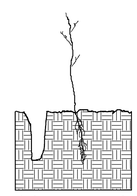

6. Leave compaction hole open. Water thoroughly.

PLANTING NOTES:

PLANTING BAG
During planting, seedlings shall be kept in a moist canvas bag or similar container to prevent the root systems from drying.

KBC PLANTING BAR
Planting bar shall have a blade with a triangular cross section, and shall be 12 inches long, 4 inches wide and 1 inch thick at center.

ROOT PRUNING
All seedlings shall be root pruned, if necessary, so that no roots extend more than 10 inches below the root collar.

REFORESTATION

☐ TREE REFORESTATION SHALL BE PLANTED 6 FT. TO 10 FT. ON CENTER, RANDOM SPACING, AVERAGING 8 FT. ON CENTER, APPROXIMATELY 680 PLANTS PER ACRE.

REFORESTATION

MIXTURE, TYPE, SIZE, AND FURNISH SHALL CONFORM TO THE FOLLOWING:

50% CORNUS FLORIDA	FLOWERING DOGWOOD	12 in – 18 in BR
50% CERCIS CANADENSIS	REDBUD	12 in – 18 in BR

REFORESTATION DETAIL SHEET

N.C.D.O.T. - ROADSIDE ENVIRONMENTAL UNIT

DocuSign Envelope ID: A87BB1CC-193C-453E-B835-A1C31CA4A2E0

B-4792

CONTRACT:

STATE OF NORTH CAROLINA
DEPARTMENT OF TRANSPORTATION

PROJECT REFERENCE NO.	SHEET NO.
B-4792	SIGN - 1

APPROVED: DocuSigned by: Ken King 13E7AF7B9AA4448...

DATE: 10/13/2015

SEAL

NORTH CAROLINA PROFESSIONAL SEAL 022959 ENGINEER RONALD W. KING

SIGNING PLAN
POLK

LOCATION: BRIDGE NO.4 OVER FORK CREEK (SMALL BRANCH OF PACOLET RIVER) ON SR 1102

SUMMARY OF QUANTITIES

ITEM NO. DESC. NO.	ITEM NO. SECT. NO.	ITEM DESCRIPTION	QUANTITY	UNIT
4072000000	903	SUPPORTS, 3 LB STEEL U-CHANNEL	17	L.F.
4102000000	904	SIGN ERECTION, TYPE E	1	EA.
4155000000	907	DISPOSAL OF SIGN SYSTEM, U-CHANNEL	5	EA.

ROADWAY STANDARD DRAWING

THE FOLLOWING ROADWAY STANDARDS AS APPEAR IN "ROADWAY STANDARD DRAWINGS" - PROJECT SERVICES UNIT - N.C. DEPARTMENT OF TRANSPORTATION - RALEIGH, N.C., DATED JANUARY 2012 ARE APPLICABLE TO THIS PROJECT AND BY REFERENCE HEREBY ARE CONSIDERED A PART OF THESE PLANS:

904.10 ORIENTATION OF GROUND MOUNTED SIGNS

904.50 MOUNTING OF TYPE 'D', 'E' AND 'F' SIGNS ON 'U' CHANNEL POSTS

PROJECT NOTES

1 DISPOSAL OF SIGN SYSTEM, U-CHANNEL

401 QUANTITY REQ'D 1

7'-8" 36 X 36 W12-2

ONE "U" POST PER SIGN

402 QUANTITY REQ'D 1

3 MILES AHEAD 30 X 24 W16-3P

MOUNT BELOW SIGN 401 IN 1 INSTALLATIONS

ONE "U" POSTS PER SIGN

GENERAL NOTES

- SIGNS FURNISHED BY STATE
- IF REMOVAL OR RELOCATION OF SIGNS ON PRIVATE STREET (NON-STATE MAINTAINED) IS REQUIRED DUE TO CONSTRUCTION, THE CONTRACTOR SHALL INFORM THE ENGINEER. THE WORK WILL BE COMPLETED BY OTHERS.
- WHEN NOT STATIONED OR DIMENSIONED ON PLANS, ALL 'E' AND 'F' SIGNS SHALL BE FIELD LOCATED BY THE ENGINEER
- ALL EXISTING SIGNS ON "U" CHANNEL POST WITHIN THE PROJECT LIMITS SHALL BE REMOVED AND DISPOSED OF UNLESS OTHERWISE NOTED ON PLANS.
- WHEN EXISTING SIGNS ARE REMOVED AND INSTALLED ON NEW SUPPORTS, THE RE-ERECTION SHALL IMMEDIATELY FOLLOW THE REMOVAL.
- THE BACKGROUND FOR TYPE E & F SIGNS SHALL BE TYPE C REFLECTIVE SHEETING.
- SEE ROADWAY PLANS FOR GUARD/GUIDE RAIL DETAILS.

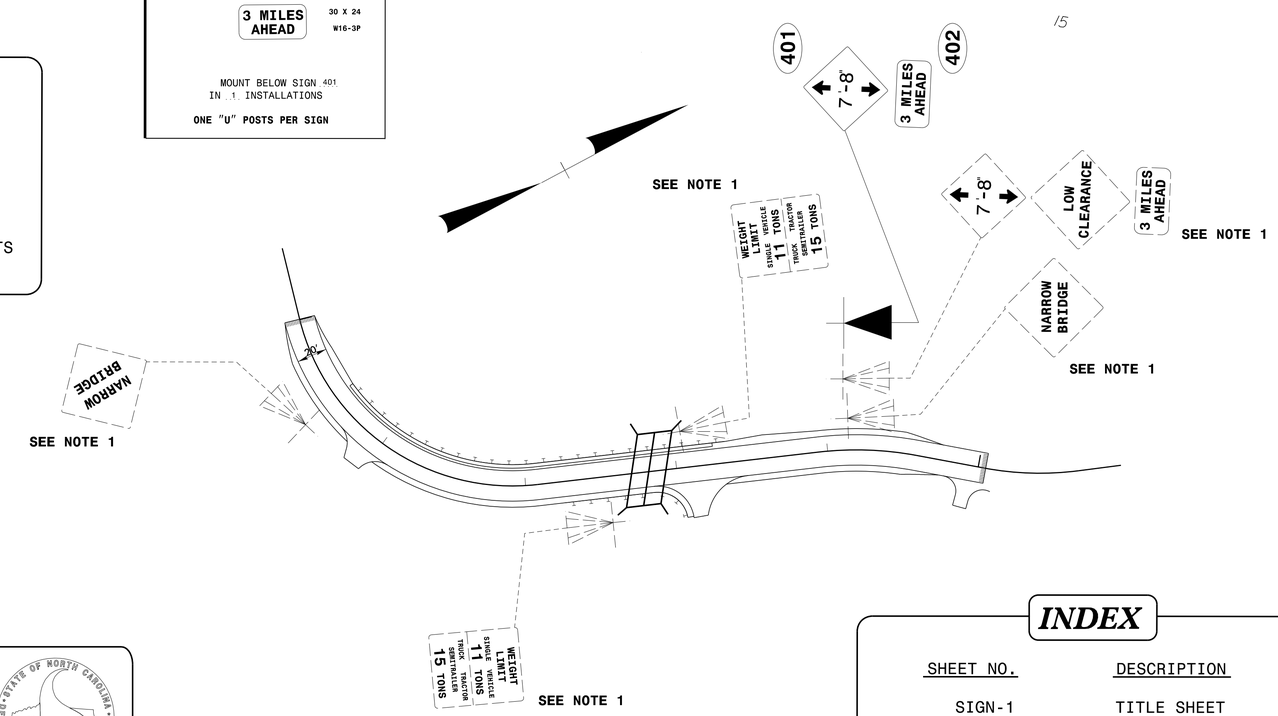

PLAN PREPARED BY: N.C.D.O.T. SIGNING AND DELINEATION UNIT

KELVIN JORDAN SIGNING & DELINEATION REGIONAL ENGINEER

J.NAVARRETE SIGNING & DELINEATION PROJECT DESIGN ENGINEER

STATE OF NORTH CAROLINA DEPARTMENT OF TRANSPORTATION

INDEX

SHEET NO.	DESCRIPTION
SIGN-1	TITLE SHEET

10/13/2015
P:\TIPProjects-B\B4792\Traffic\Signing\CADD\Signing Layout Plans\B-4792_Sgn_SGN.dgn
User:jnavarrete

DocuSign Envelope ID: A87BB1CC-193C-453E-B835-A1C31CA4A2E0

09/08/99

TIP PROJECT: B–4792

T.I.P. NO.	SHEET NO.
B–4792	UO–1

STATE OF NORTH CAROLINA
DIVISION OF HIGHWAYS

UTILITIES BY OTHERS PLANS
POLK COUNTY

LOCATION: BRIDGE NO. 4 OVER SMALL BRANCH OF PACOLET RIVER ON SR 1102
TYPE OF WORK: UNDERGROUND POWER AND TELEPHONE, AERIAL POWER AND TELEPHONE

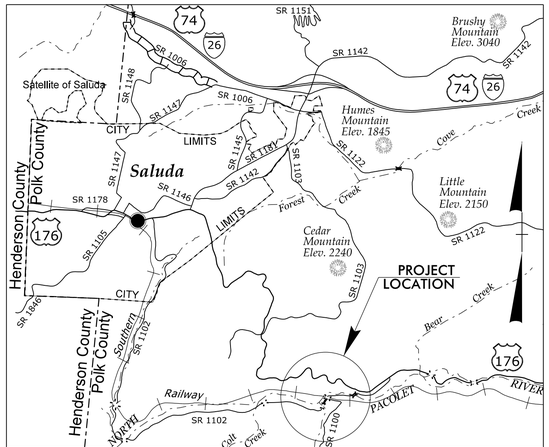

VICINITY MAP

BEGIN TIP PROJECT No. B–4792
–L– PC Sta. 9+99.74

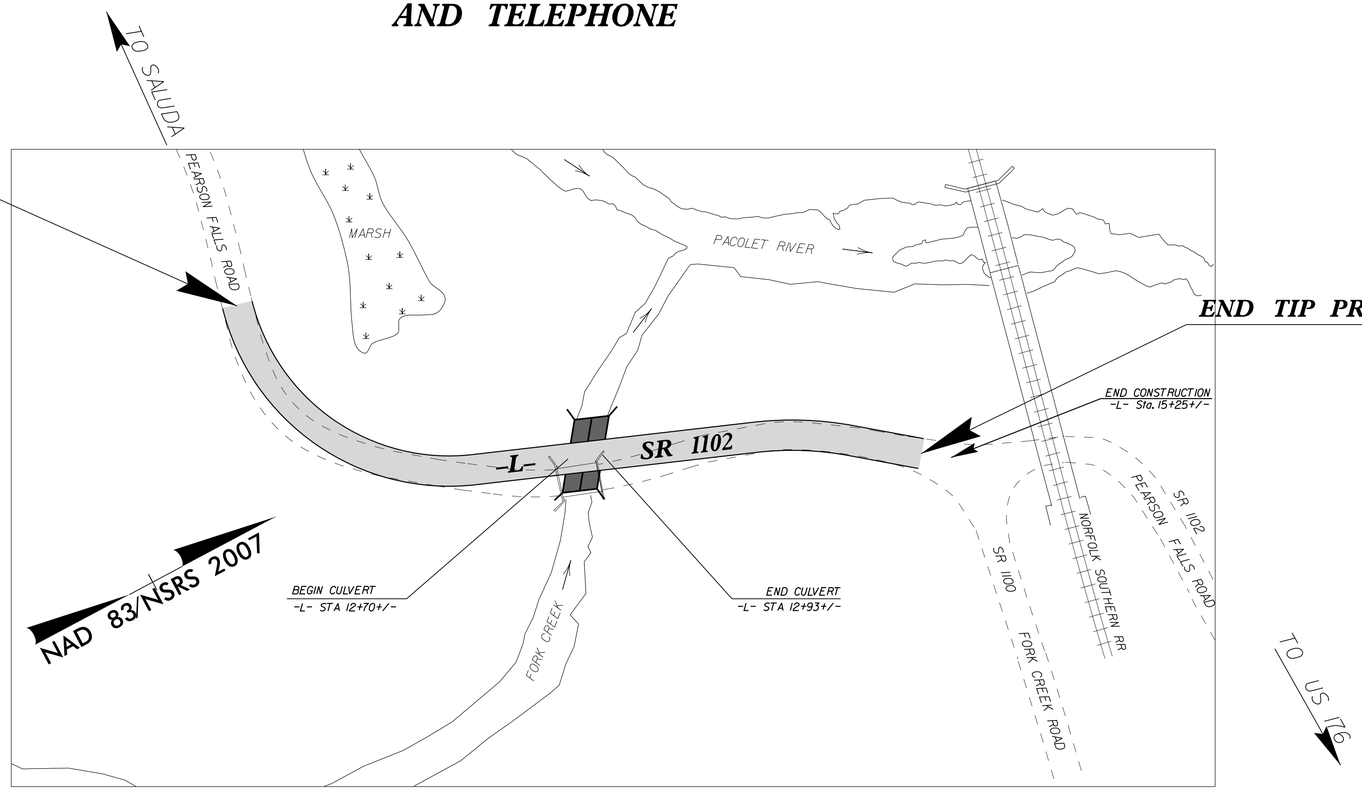

GRAPHIC SCALES

50 25 0 50 100
PLANS

INDEX OF SHEETS

SHEET NO.	DESCRIPTION
UO–1	TITLE SHEET
UO–2	UTILITY BY OTHERS PLAN SHEETS

UTILITY OWNERS ON PROJECT

(1) POWER – DUKE – (DUKE ENERGY PROGRESS)
(2) TELEPHONE – TDS – (TDS TELECOM)
(3) FIBER – PALMETTO NET – (PALMETTO NET) – NO CONFLICT

PLANS PREPARED BY:

RS&H

PREPARED FOR THE OFFICE OF:
DIVISION OF HIGHWAYS
UTILITIES ENGINEERING SECTION
1591 MAIL SERVICES CENTER
RALEIGH NC 27699–1591
PHONE (919) 250–4128
FAX (919) 250–4119

Jaston Talley, P.E. UTILITIES PROJECT DESIGNER

09-NOV-2015 14:59
R:\Utilities\B4792_Ut_tsh.dgn

DocuSign Envelope ID: A87BB1CC-193C-453E-B835-A1C31CA4A2E0

PROJECT REFERENCE NO.	SHEET NO.
B-4792	UO-2

UTILITIES BY OTHERS

NOTE:
ALL PROPOSED UTILITY WORK SHOWN ON THIS SHEET WILL BE DONE BY OTHERS.

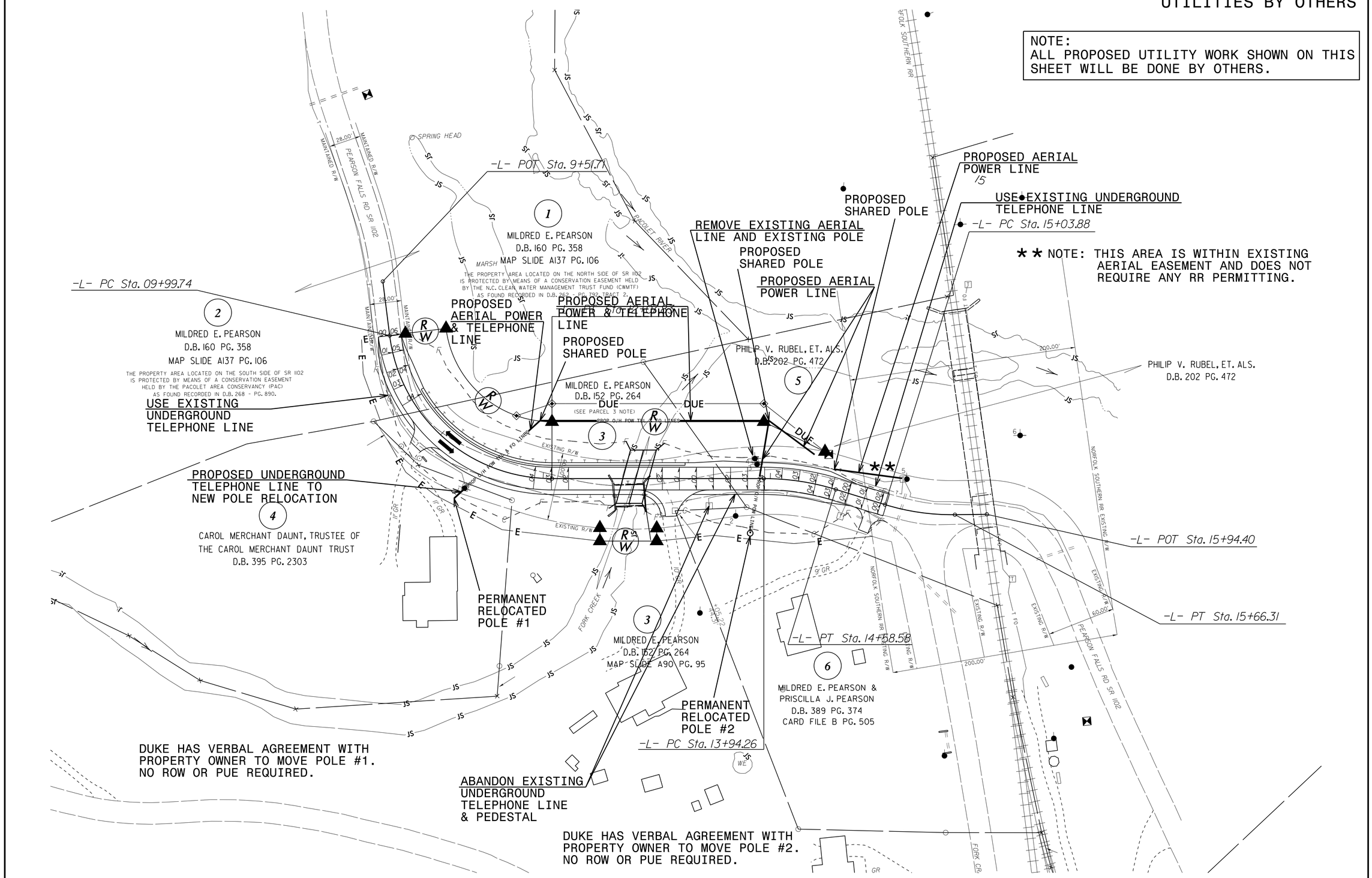

8/17/99

RECEIVED 11/18/2015 3:15:00 PM

NR9TXT4DRAL.11/9/2015.R:\Roadway\XSC\B4792_Earthwork XSC Volume Summary.xls
DocuSign Envelope ID: A87BB1CC-193C-453E-B835-A1C31CA4A2E0

PROJ. REFERENCE NO.	SHEET NO.
B-4792	X-1A

STATE OF NORTH CAROLINA
DIVISION OF HIGHWAYS

CROSS-SECTION SUMMARY

Approximate quantities only. Unclassified excavation, borrow excavation, fine grading, clearing and grubbing, and removal of existing pavement will be paid for at the lump sum price for "Grading".

NOTE: EMBANKMENT COLUMN DOES NOT INCLUDE BACKFILL FOR UNDERCUT

Station L	Uncl. Exc. (cu. yd.)	Embt (cu. yd.)	Station L	Uncl. Exc. (cu. yd.)	Embt (cu. yd.)
Phase I			Phase II		
9+99.74	0	0	9+99.74	0	0
10+00.00	0	0	10+00.00	0	0
10+10.00	2	11	10+10.00	1	0
10+20.00	1	24	10+20.00	1	0
10+30.00	1	28	10+30.00	1	0
10+40.00	0	34	10+40.00	1	0
10+50.00	0	39	10+50.00	1	0
10+60.00	0	46	10+60.00	1	0
10+70.00	0	53	10+70.00	3	0
10+80.00	0	60	10+80.00	5	0
10+90.00	0	65	10+90.00	9	0
11+00.00	0	66	11+00.00	12	0
11+10.00	0	66	11+10.00	12	0
11+20.00	0	62	11+20.00	12	0
11+30.00	0	54	11+30.00	14	0
11+40.00	0	46	11+40.00	16	1
11+50.00	0	42	11+50.00	18	2
11+60.00	0	39	11+60.00	24	3
11+70.00	0	37	11+70.00	31	3
11+80.00	0	35	11+80.00	35	5
11+90.00	0	34	11+90.00	34	7
12+00.00	0	35	12+00.00	16	9
12+10.00	0	39	12+10.00	0	10
12+20.00	0	42	12+20.00	0	9
12+30.00	0	41	12+30.00	0	8
12+40.00	0	38	12+40.00	0	8
12+50.00	0	36	12+50.00	0	7
12+60.00	0	38	12+60.00	0	6
12+70.00	0	49	12+70.00	0	38
12+80.00	0	67	12+80.00	0	70
12+81.60	0	0	12+81.60	0	0
12+90.00	0	64	12+90.00	0	29
13+00.00	0	54	13+00.00	1	1
13+10.00	0	23	13+10.00	2	0
13+20.00	0	13	13+20.00	3	0
13+30.00	0	13	13+30.00	4	0
13+40.00	0	11	13+40.00	7	0
13+50.00	0	5	13+50.00	15	0
13+60.00	1	2	13+60.00	25	1
13+70.00	1	1	13+70.00	33	1
13+80.00	1	1	13+80.00	41	1
13+90.00	1	1	13+90.00	47	1
14+00.00	0	1	14+00.00	48	1
14+10.00	0	1	14+10.00	49	1
14+20.00	0	1	14+20.00	53	1
14+30.00	0	1	14+30.00	52	1
14+40.00	0	1	14+40.00	48	1
14+50.00	1	0	14+50.00	44	0
14+60.00	1	0	14+60.00	21	1
14+70.00	0	0	14+70.00	0	1
14+80.00	0	0	14+80.00	0	1
14+90.00	0	0	14+90.00	0	1
15+00.00	0	0	15+00.00	0	0
15+05.00	0	0	15+05.00	0	0
15+10.00	0	0	15+10.00	0	0
Phase I Total	10	1419	Phase II Total	740	229

INDEX OF SHEETS

-L-	X-2 THRU X-11

DocuSign Envelope ID: A87BB1CC-193C-453E-B835-A1C31CA4A2E0

PROJ. REFERENCE NO.	SHEET NO.
B-4792	X-2

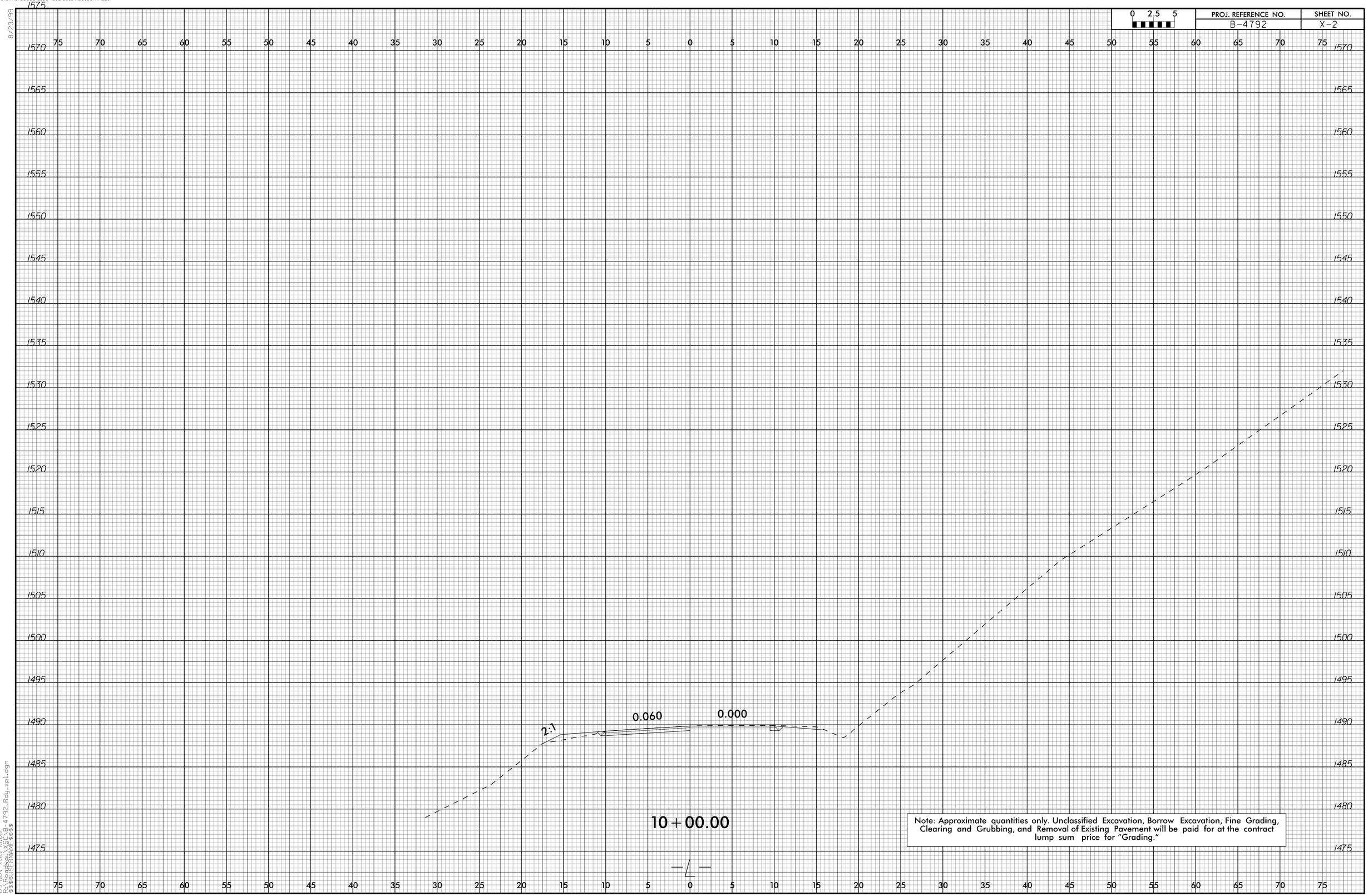

Note: Approximate quantities only. Unclassified Excavation, Borrow Excavation, Fine Grading, Clearing and Grubbing, and Removal of Existing Pavement will be paid for at the contract lump sum price for "Grading."

DocuSign Envelope ID: A87BB1CC-193C-453E-B835-A1C31CA4A2E0

8/23/99

0 2.5 5

PROJ. REFERENCE NO.	SHEET NO.
B-4792	X-3

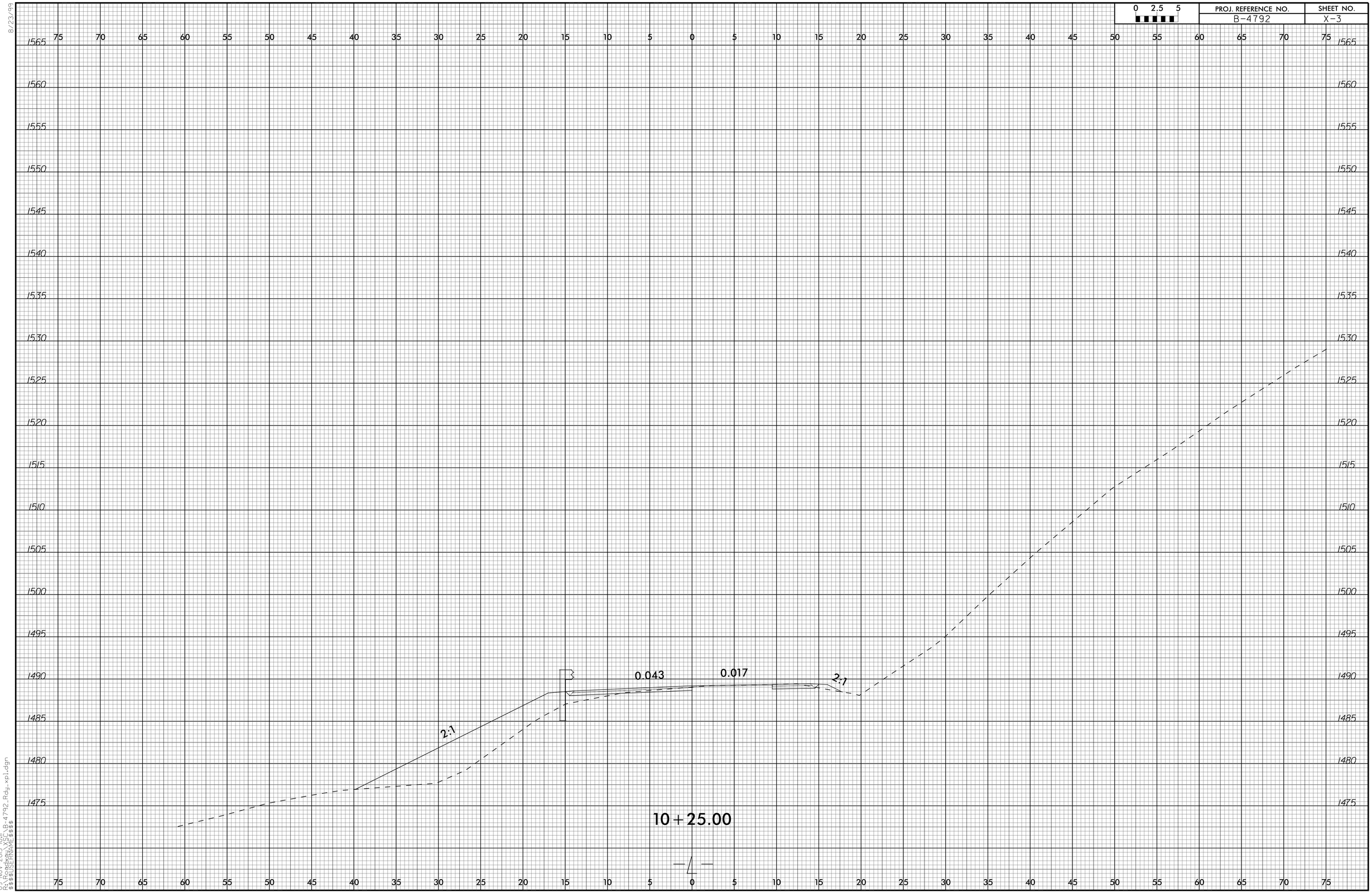

09-NOV-2015 10:11
R:\Roadway\B-4792_Rdy_xpl.dgn
$$$$USERNAME$$$$

DocuSign Envelope ID: A87BB1CC-193C-453E-B835-A1C31CA4A2E0

8/23/99

0 2.5 5

PROJ. REFERENCE NO.	SHEET NO.
B-4792	X-4

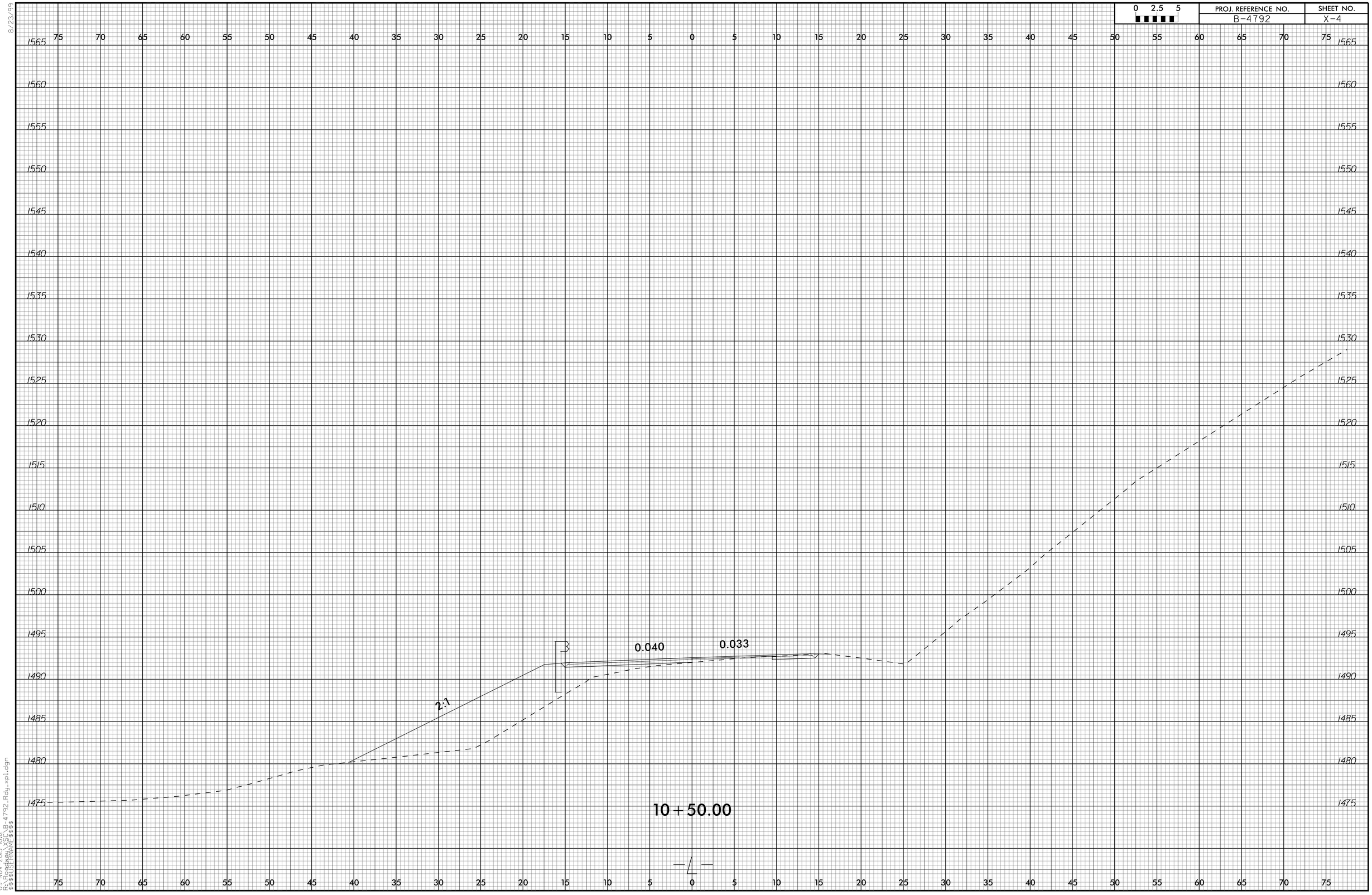

09-NOV-2015 10:12
R:\Roadway\B_4792_Rdy_xpl.dgn
$$$$USERNAME$$$$

DocuSign Envelope ID: A87BB1CC-193C-453E-B835-A1C31CA4A2E0

8/23/99

0 2.5 5

PROJ. REFERENCE NO.	SHEET NO.
B-4792	X-5

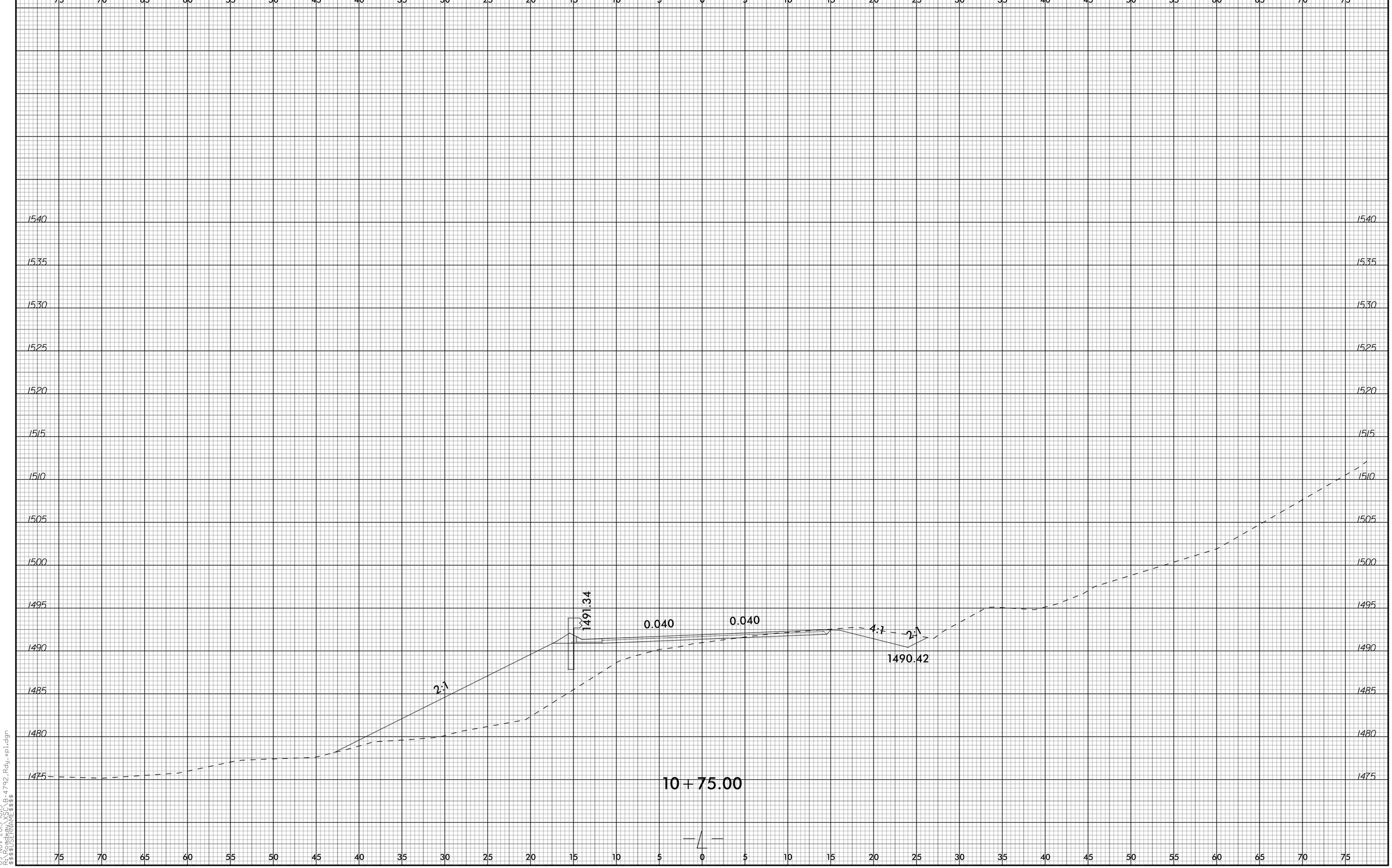

09-NOV-2015 10:3
R:\Rdy_xpl\B-4792_Rdy_xpl.dgn
$$$$USERNAME$$$$

DocuSign Envelope ID: A87BB1CC-193C-453E-B835-A1C31CA4A2E0

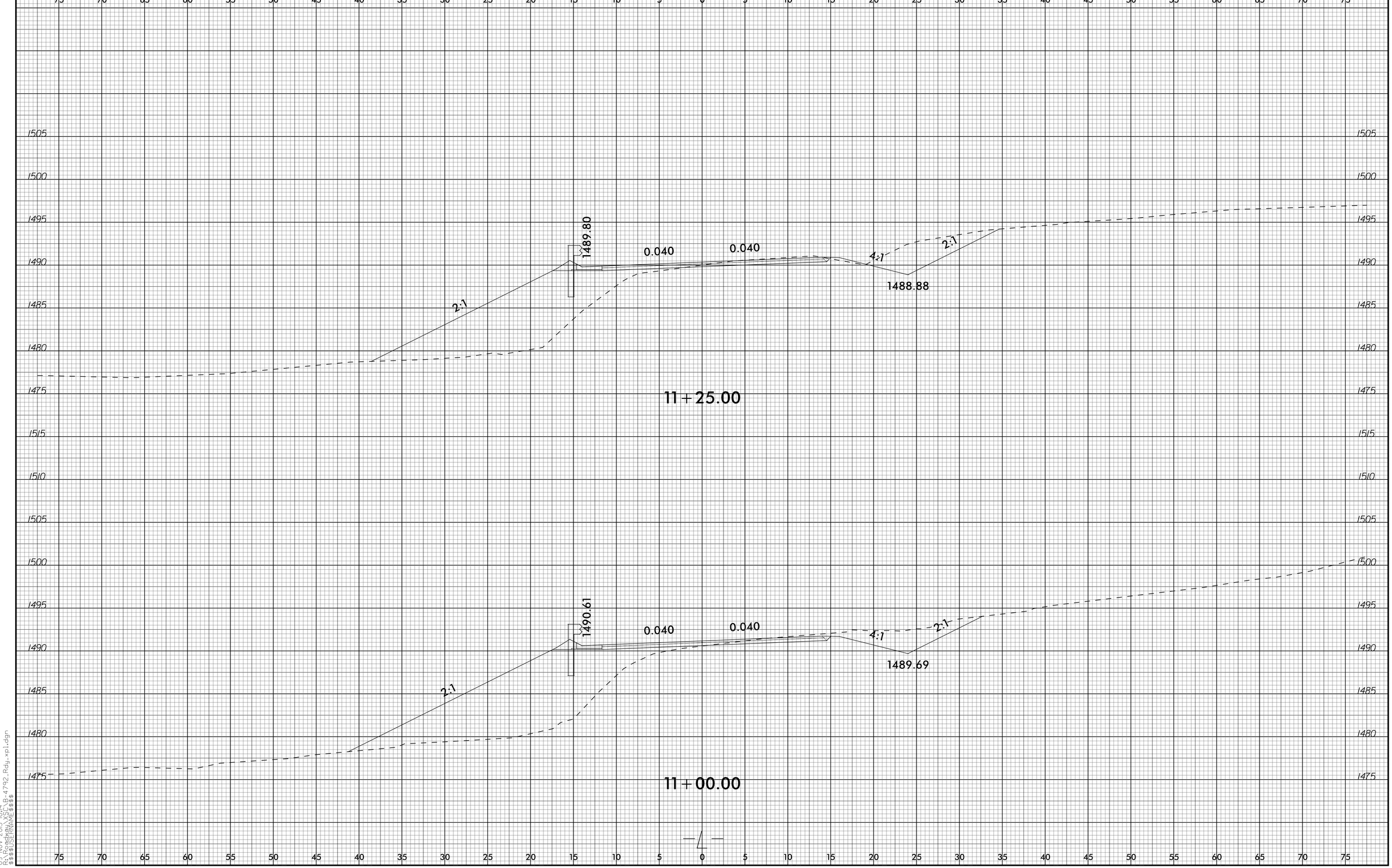

8/23/99
09-NOV-2015 10:4
R:\Roadway\B-4792_Rdy_xpl.dgn
$$$$USERNAME$$$$

DocuSign Envelope ID: A87BB1CC-193C-453E-B835-A1C31CA4A2E0

PROJ. REFERENCE NO.	SHEET NO.
B-4792	X-7

0 2.5 5

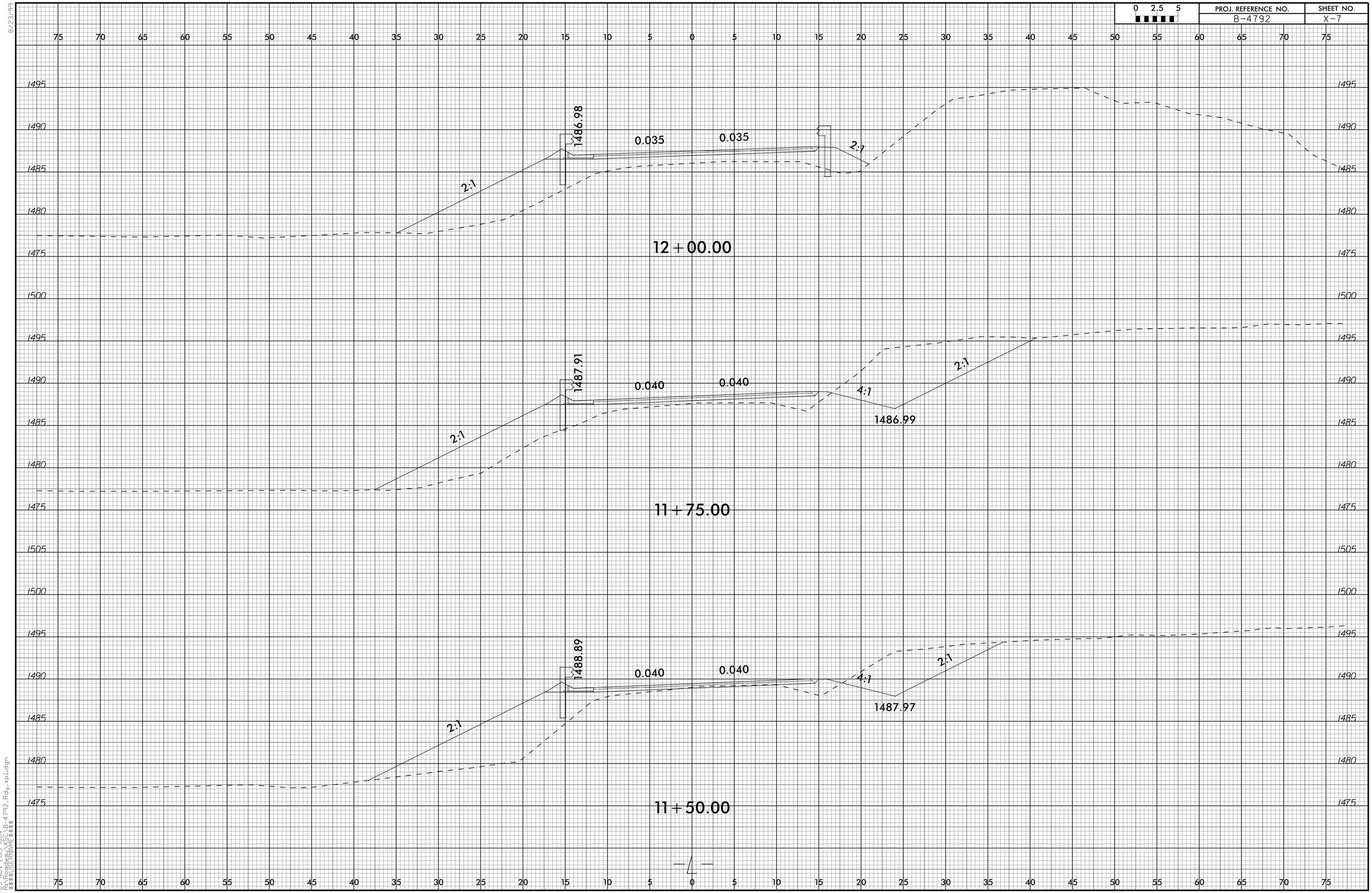

09-NOV-2015 10:4
R:\Rdy_xpl\B-4792_Rdy_xpl.dgn
$$$$USERNAME$$$$

DocuSign Envelope ID: A87BB1CC-193C-453E-B835-A1C31CA4A2E0

0 2.5 5

PROJ. REFERENCE NO.	SHEET NO.
B-4792	X-8

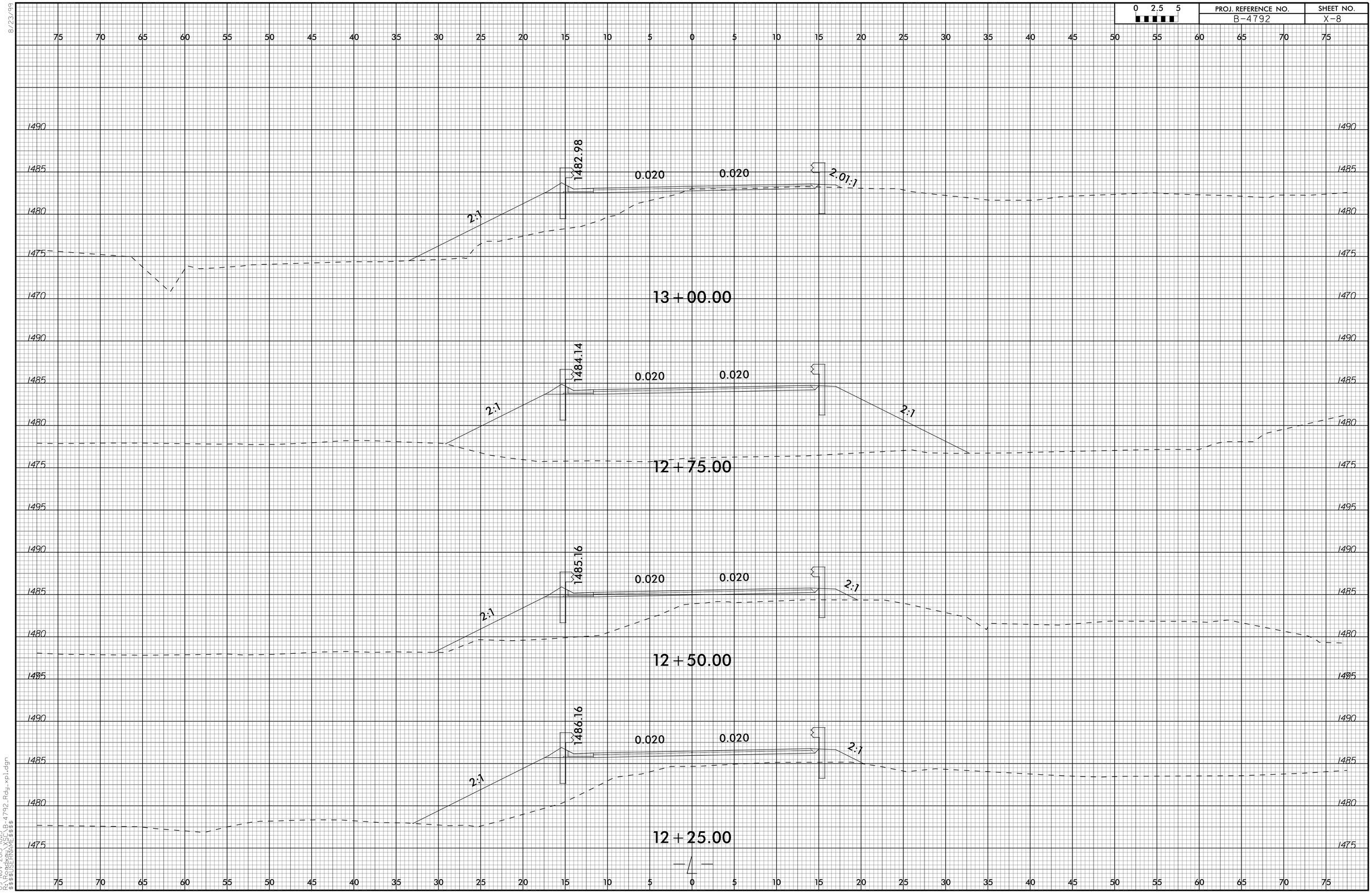

DocuSign Envelope ID: A87BB1CC-193C-453E-B835-A1C31CA4A2E0

8/23/99

0 2.5 5	PROJ. REFERENCE NO.	SHEET NO.
	B-4792	X-9

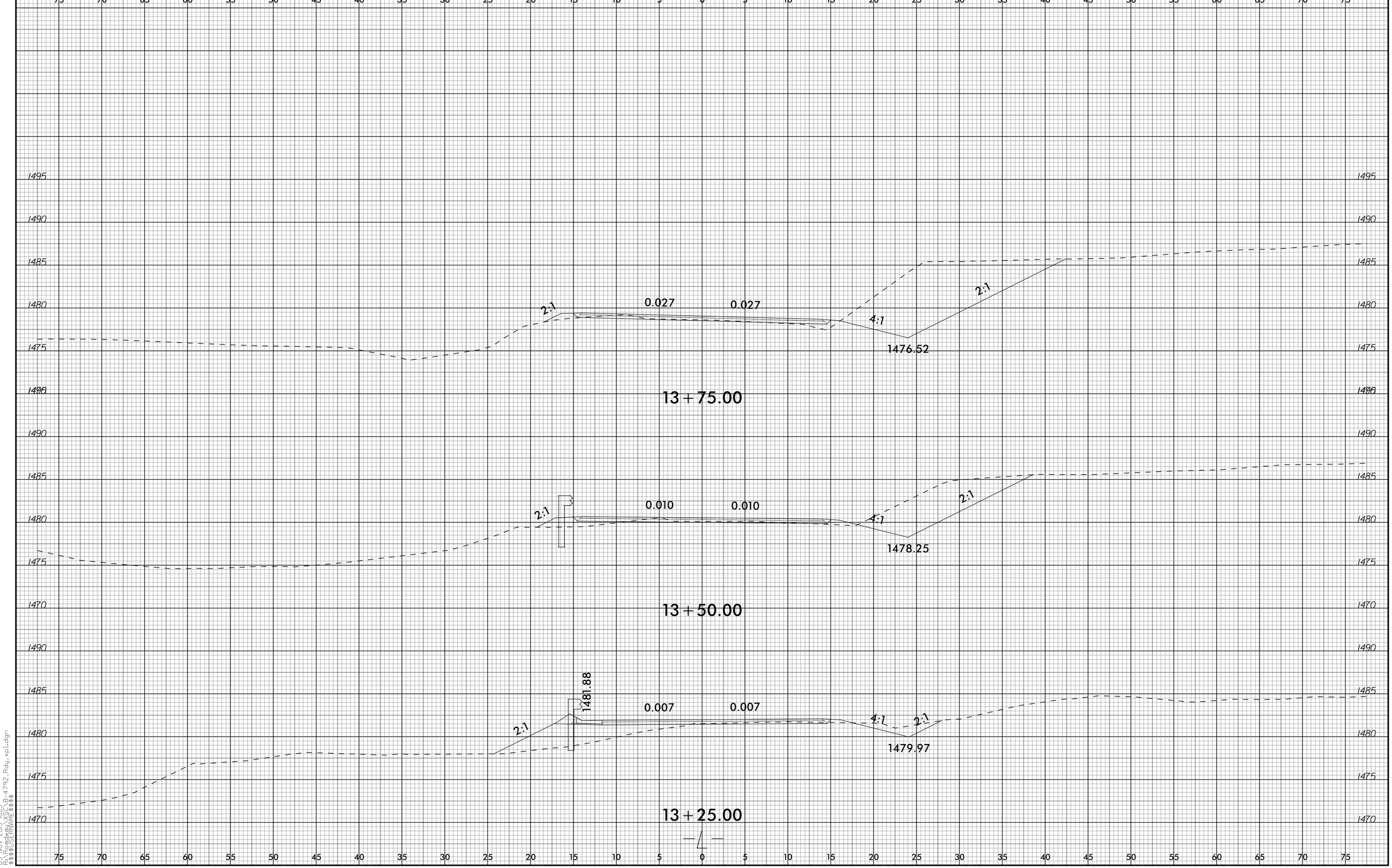

09-NOV-2015 10:5
R:\Proj\B-4792_Rdy_xpl.dgn
$$$$USERNAME$$$$

DocuSign Envelope ID: A87BB1CC-193C-453E-B835-A1C31CA4A2E0

PROJ. REFERENCE NO.	SHEET NO.
B-4792	X-10

0 2.5 5

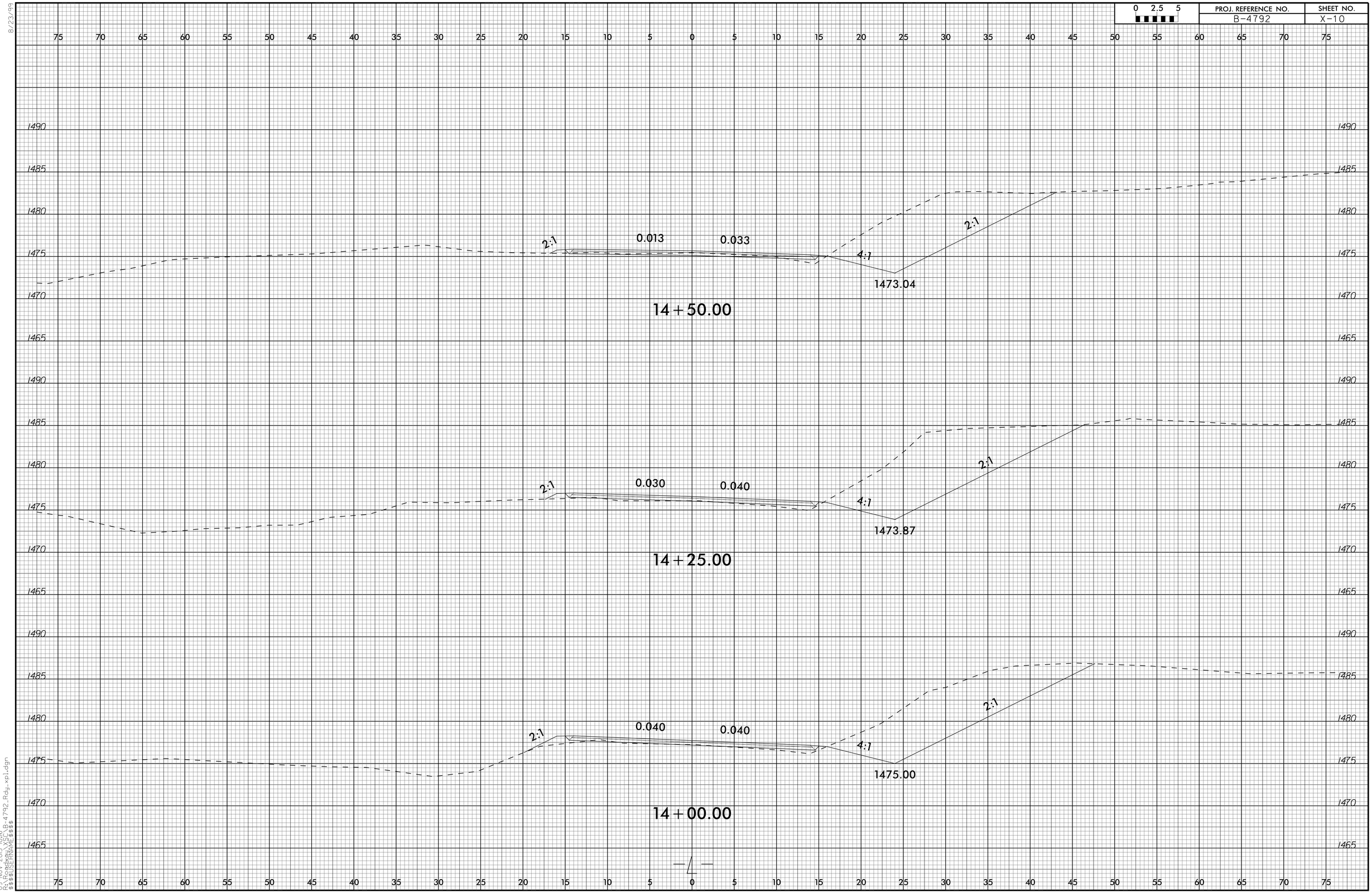

8/23/99
09-NOV-2015 10:06
R:\ROADWAY\B-4792_Rdy_xpl.dgn
$$$$USERNAME$$$$

DocuSign Envelope ID: A87BB1CC-193C-453E-B835-A1C31CA4A2E0

8/23/99

PROJ. REFERENCE NO.	SHEET NO.
B-4792	X-11

0 2.5 5

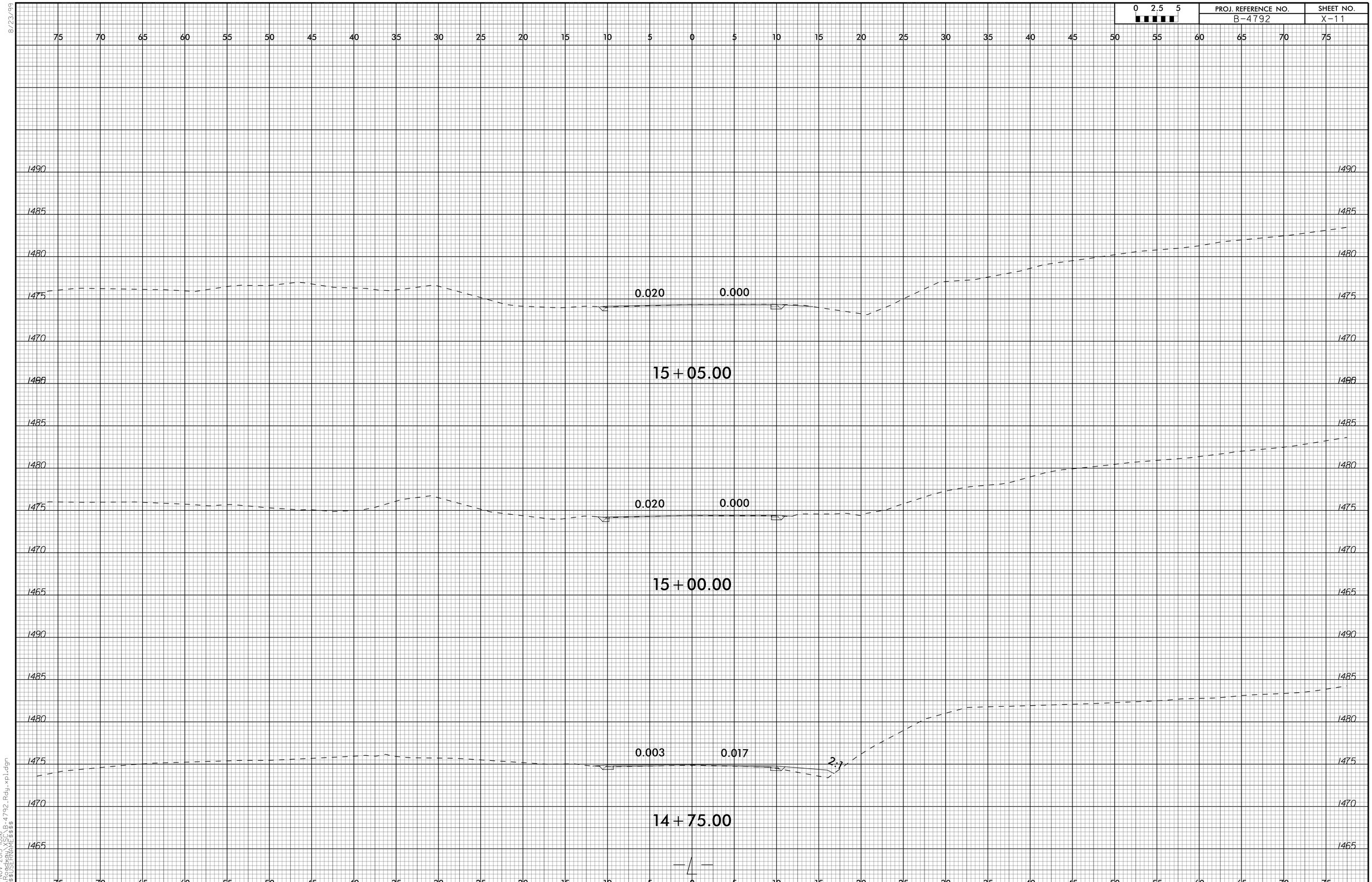

09-NOV-2015 10:06
R:\Roadway\proj\B-4792_Rdy_xpl.dgn
$$$$USERNAME$$$$

DocuSign Envelope ID: A87BB1CC-193C-453E-B835-A1C31CA4A2E0

TIP NO: B-4792

CONTRACT: DN00448

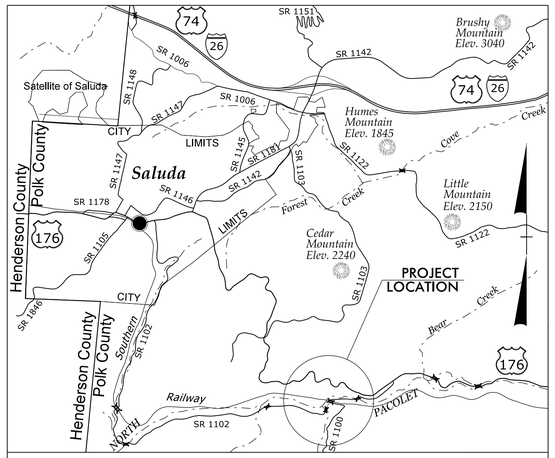

VICINITY MAP

STATE OF NORTH CAROLINA
DIVISION OF HIGHWAYS

POLK COUNTY

STATE	STATE PROJECT REFERENCE NO.	SHEET NO.	TOTAL SHEETS
N.C.	B-4792		

STATE PROJ. NO.	F.A. PROJ. NO.	DESCRIPTION
38562.1.1	BRZ-1102(5)	P.E.
38562.2.1	BRZ-1102(5)	R/W, UTILITIES
38562.3.1	BRZ-1102(5)	CONSTRUCTION

LOCATION: BRIDGE No. 4 OVER FORK CREEK (SMALL BRANCH OF PACOLET RIVER) ON SR 1102

TYPE OF WORK: GRADING, PAVING, DRAINAGE, STRUCTURE

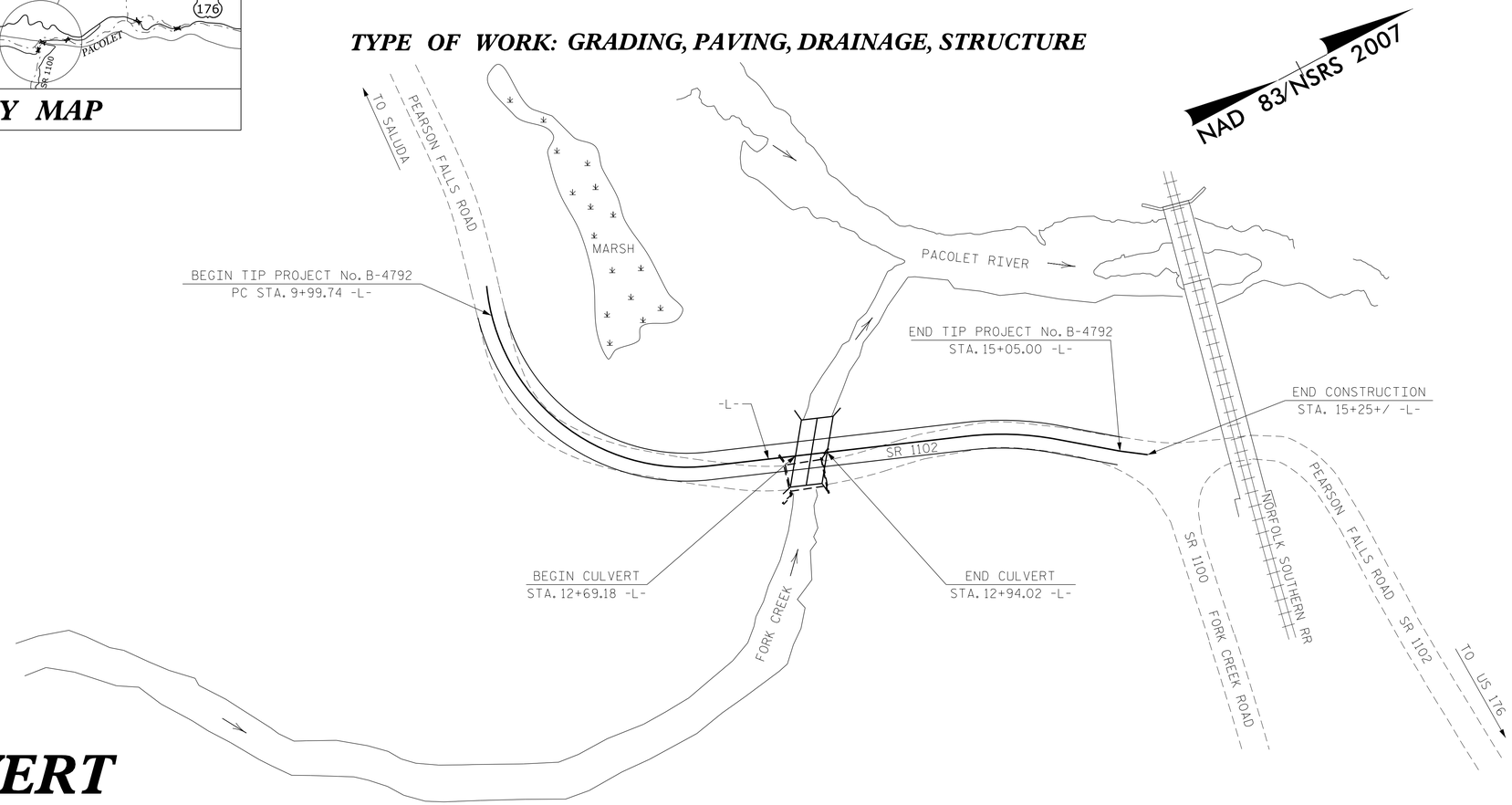

CULVERT

STATE OF NORTH CAROLINA DEPARTMENT OF TRANSPORTATION

DESIGN DATA

ADT 2014 = 100
ADT 2035 = 200
K = 25 %
D = 55 %
T = 19 % *
V = 25 MPH
* TTST =1% DUAL 18%

FUNC CLASS = LOCAL

SUBREGIONAL TIER

PROJECT LENGTH

LENGTH ROADWAY OF F.A. PROJECT B-4792	=	0.092 MILES
LENGTH STRUCTURE OF F.A. PROJECT B-4792	=	0.004 MILES
TOTAL LENGTH OF STATE PROJECT B-4792	=	0.096 MILES

Prepared in the Office of:

DIVISION OF HIGHWAYS
STRUCTURES MANAGEMENT UNIT
1000 BIRCH RIDGE DR.
RALEIGH, N.C. 27610

2012 STANDARD SPECIFICATIONS

LETTING DATE : MAY 10, 2016

D. R. CALHOUN, P.E.
PROJECT ENGINEER

W. S. ARAFAT, P.E.
PROJECT DESIGN ENGINEER

DocuSign Envelope ID: A87BB1CC-193C-453E-B835-A1C31CA4A2E0

B.M. #2 - SPIKE SET IN BASE OF 24'' Ø POPLAR TREE, 28.09 FT. LT., STA. 14+45.31 -L-, EL. 1476.67

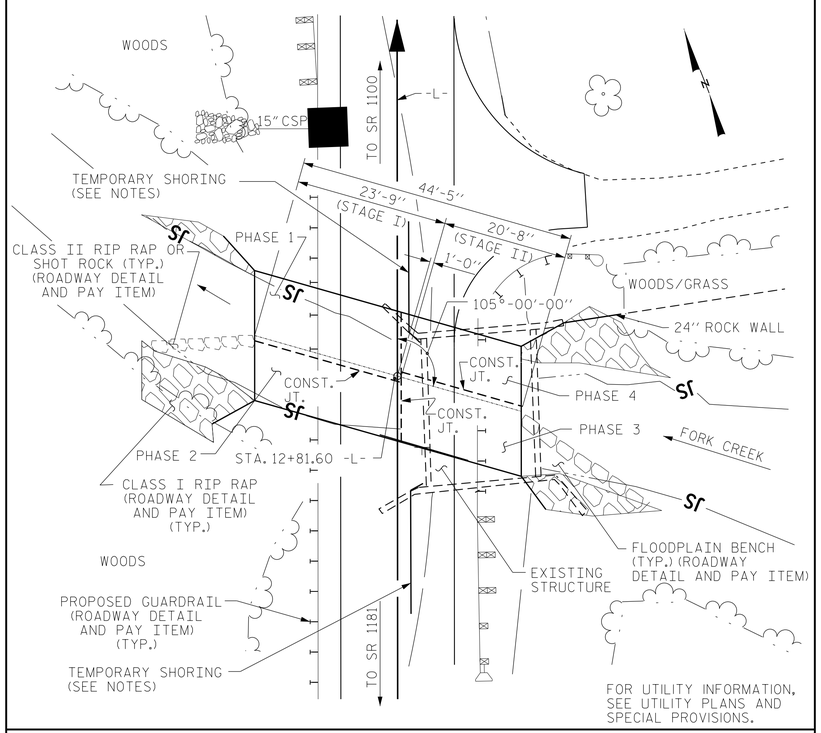

LOCATION SKETCH

ROADWAY DATA

GRADE POINT EL. @ STATION 12+81.60 -L- = 1484.17

BED EL. @ STATION 12+81.60 -L- = 1474.86

ROADWAY SLOPES = 2:1

HYDRAULIC DATA

DESIGN DISCHARGE _____ = 650 C.F.S

FREQUENCY OF DESIGN FLOOD_____= 25 YEARS

DESIGN HIGH WATER ELEVATION____ = 1481.50

DRAINAGE AREA = _____ = 2.09 SQ. MI.

BASE DISCHARGE (Q100) _____ = 950 C.F.S.

BASE HIGH WATER ELEVATION = _____ 1483.20

OVERTOPPING FLOOD DATA

OVERTOPPING DISCHARGE _____ = 900 C.F.S.

FREQUENCY OF OVERTOPPING FLOOD ___ = 50 + YEARS

OVERTOPPING FLOOD ELEVATION _____ = 1483.00±

OT OCCURS AT/NEAR DRIVE NEAR STA. 13+10 -L- RT.

TOTAL STRUCTURE QUANTITIES

CLASS A CONCRETE	
STAGE I	68.6 C.Y.
STAGE II	60.2 C.Y.
TOTAL	128.8 C.Y.
REINFORCING STEEL	
STAGE I	9,218 LBS.
STAGE II	8,128 LBS.
TOTAL	17,346 LBS.
CULVERT EXCAVATION	LUMP SUM
FOUNDATION COND. MAT'L	
STAGE I	47 TONS
STAGE II	41 TONS
TOTAL	88 TONS
REMOVAL OF EXISTING STRUCTURE	LUMP SUM
CHANNEL SUBSTRATE MATERIAL	15 TONS

NOTES

ASSUMED LIVE LOAD = HL93 OR ALTERNATE LOADING.

DESIGN FILL MAX. = 3.87, MIN. = 2.74

FOR OTHER DESIGN DATA AND NOTES, SEE STANDARD NOTE SHEET.

3'' Ø WEEP HOLES INDICATED TO BE IN ACCORDANCE WITH THE SPECIFICATIONS.

CONCRETE IN STAGE I CULVERT TO BE POURED IN THE FOLLOWING ORDER:

1. PHASE 1 WING FOOTING AND FLOOR SLAB INCLUDING 4 INCHES OF ALL PHASE 1 VERTICAL WALLS.
2. THE REMAINING PORTIONS OF PHASE 1 WALLS AND PHASE 1 WING FULL HEIGHT.
3. PHASE 2 WING FOOTING AND FLOOR SLAB INCLUDING 4 INCHES OF PHASE 2 VERTICAL WALL
4. THE REMAINING PORTIONS OF PHASE 2 WALL AND PHASE 2 WING FULL HEIGHT.
5. ROOF SLAB AND HEADWALLS

CONCRETE IN STAGE II CULVERT TO BE POURED IN THE FOLLOWING ORDER:

1. PHASE 3 WING FOOTING AND FLOOR SLAB INCLUDING 4'' OF PHASE 3 VERTICAL WALLS.
2. THE REMAINING PORTIONS PHASE 3 WALLS AND PHASE 3 WING FULL HEIGHT.
3. PHASE 4 WING FOOTING AND FLOOR SLAB INCLUDING 4'' OF PHASE 4 VERTICAL WALL.
4. THE REMAINING PORTIONS OF PHASE 4 WALL AND PHASE 4 WING FULL HEIGHT.
5. ROOF SLAB AND HEADWALL.

THE RESIDENT ENGINEER SHALL CHECK THE LENGTH OF CULVERT BEFORE STAKING IT OUT TO MAKE CERTAIN THAT IT WILL PROPERLY TAKE CARE OF THE FILL.

DIMENSIONS FOR WING LAYOUT AS WELL AS ADDITIONAL REINFORCING STEEL EMBEDDED IN BARREL ARE SHOWN ON WING SHEET.

AT THE CONTRACTOR'S OPTION, HE MAY SPLICE THE VERTICAL REINFORCING STEEL IN THE INTERIOR FACES OF THE EXTERIOR WALLS ABOVE LOWER WALL CONSTRUCTION JOINT. THE SPLICE LENGTH SHALL BE AS PROVIDED IN THE SPLICE LENGTH CHART SHOWN ON THE PLANS. EXTRA WEIGHT OF STEEL DUE TO THE SPLICES SHALL BE PAID FOR BY THE CONTRACTOR.

AT THE CONTRACTOR'S OPTION HE MAY SUBMIT, TO THE ENGINEER FOR APPROVAL, DESIGN AND DETAIL DRAWINGS FOR A PRECAST REINFORCED CONCRETE BOX CULVERT IN LIEU OF THE CAST-IN-PLACE CULVERT SHOWN ON THE PLANS. THE DESIGN SHALL PROVIDE THE SAME SIZE AND NUMBER OF BARRELS AS USED ON THE CAST-IN-PLACE DESIGN. FOR OPTIONAL PRECAST REINFORCED CONCRETE BOX CULVERT, SEE SPECIAL PROVISIONS.

A 3 FOOT STRIP OF FILTER FABRIC SHALL BE ATTACHED TO THE FILL FACE OF THE WING COVERING THE ENTIRE LENGTH OF THE EXPANSION JOINT.

THE EXISTING EARWALL OF THE BRIDGE SHALL BE REMOVED AS NECESSARY TO CONSTRUCT STAGE I CULVERT.

FOR SUBMITTAL OF WORKING DRAWINGS, SEE SPECIAL PROVISIONS.

FOR CULVERT DIVERSION DETAILS AND PAY ITEM, SEE EROSION CONTROL PLANS.

FOR CRANE SAFETY, SEE SPECIAL PROVISIONS.

FOR EROSION CONTROL MEASURES, SEE EROSION CONTROL PLANS.

INASMUCH AS THE PAINT SYSTEM ON THE EXISTING STRUCTURAL STEEL CONTAINS LEAD, THE CONTRACTOR'S ATTENTION IS DIRECTED TO ARTICLE 107-1 OF THE STANDARD SPECIFICATIONS. ANY COSTS RESULTING FROM COMPLIANCE WITH APPLICABLE STATE OR FEDERAL REGULATIONS PERTAINING TO HANDLING OF MATERIALS CONTAINING LEAD BASED PAINT SHALL BE INCLUDED IN THE BID PRICE FOR "REMOVAL OF EXISTING STRUCTURE AT STATION 12+81.60 -L-."

THE SUBSTRUCTURE OF THE EXISTING BRIDGE INDICATED ON THE PLANS IS FROM THE BEST INFORMATION AVAILABLE. SINCE THIS INFORMATION IS SHOWN FOR THE CONVENIENCE OF THE CONTRACTOR, THE CONTRACTOR SHALL HAVE NO CLAIM WHATSOEVER AGAINST THE DEPARTMENT OF TRANSPORTATION FOR ANY DELAYS OR ADDITIONAL COST INCURRED BASED ON DIFFERENCES BETWEEN THE EXISTING BRIDGE SUBSTRUCTURE SHOWN ON THE PLANS AND THE ACTUAL CONDITIONS AT THE PROJECT SITE.

REMOVAL OF THE EXISTING BRIDGE SHALL BE PERFORMED IN A MANNER THAT PREVENTS DEBRIS FROM FALLING INTO THE WATER. THE CONTRACTOR SHALL SUBMIT DEMOLITION PLANS FOR REVIEW AND REMOVE THE BRIDGE IN ACCORDANCE WITH ARTICLE 402-2 OF THE STANDARD SPECIFICATIONS.

THE EXISTING STRUCTURE DESCRIBED BELOW AND LOCATED UP STREAM FROM PROPOSED STRUCTURE SHALL BE REMOVED. THE EXISTING BRIDGE IS PRESENTLY POSTED BELOW THE LEGAL LOAD LIMIT. SHOULD THE STRUCTURAL INTEGRITY OF THE BRIDGE FURTHER DETERIORATE, THIS LOAD LIMITATION MAY BE REDUCED AS FOUND NECESSARY DURING THE LIFE OF THE PROJECT.

EXISTING SUPERSTRUCTURE:
1 SPAN @ 27'-8'',
DOUBLE LAYERS OF TIMBER FLOORS
8 LINES OF 12'' I-BEAMS @ 2'-7'' CTS.
CLEAR ROADWAY WIDTH OF 19.17 FT.

EXISTING SUBSTRUCTURE:
RUBBLE MASONRY ABUTMENTS WIDENED WITH YOUNT MASONRY.
HELPER TIMBER BENT, POST AND SILL.

TRAFFIC ON SR 1102 SHALL BE MAINTAINED. IN ORDER TO MAINTAIN TRAFFIC THE CULVERT SHALL BE CONSTRUCTED IN SECTIONS AS SHOWN ON PLANS AND DIRECTED BY THE ENGINEER.

FOR FALSEWORK AND FORMWORK, SEE SPECIAL PROVISIONS.

FOR GROUT FOR STRUCTURES, SEE SPECIAL PROVISIONS.

THE CONTRACTOR SHALL PROVIDE INDEPENDENT ASSURANCE SAMPLES OF REINFORCING STEEL AS FOLLOWS: FOR PROJECTS REQUIRING UP TO 400 TONS OF REINFORCING STEEL, ONE 30 INCH SAMPLE OF EACH SIZE BAR USED, AND FOR PROJECTS REQUIRING OVER 400 TONS OF REINFORCING STEEL, TWO 30 INCH SAMPLES OF EACH SIZE BAR USED. THE BARS FROM WHICH THE SAMPLES ARE TAKEN MUST THEN BE SPLICED WITH REPLACEMENT BARS OF THE SIZE AND LENGTH OF THE SAMPLE, PLUS A MINIMUM LAP SPLICE OF THIRTY BAR DIAMETERS. PAYMENT FOR THE SAMPLES OF REINFORCING STEEL SHALL BE CONSIDERED INCIDENTAL TO VARIOUS PAY ITEMS.

FOR LIMITS OF TEMPORARY SHORING FOR MAINTENANCE OF TRAFFIC, SEE TRAFFIC CONTROL PLANS. FOR PAY ITEM FOR TEMPORARY SHORING FOR MAINTENANCE OF TRAFFIC, SEE ROADWAY PLANS.

FOR CHANNEL SUBSTRATE MATERIAL, SEE SPECIAL PROVISIONS.

F.A. PROJECT No. : BRZ-1102(5)

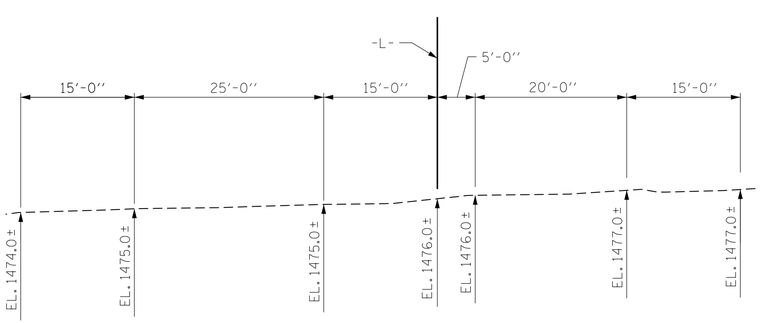

PROFILE ALONG ℄ CULVERT

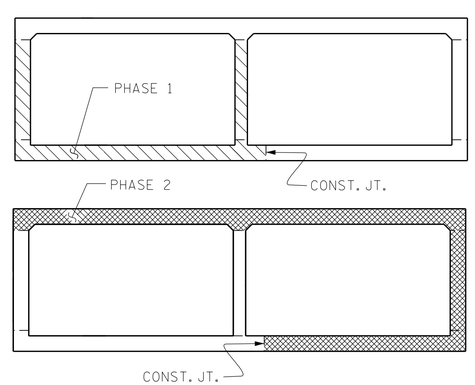

CONSTRUCTION PHASING

PHASE 1 CONSTRUCTION

PHASE 2 CONSTRUCTION

STAGE I

LOOKING UPSTREAM

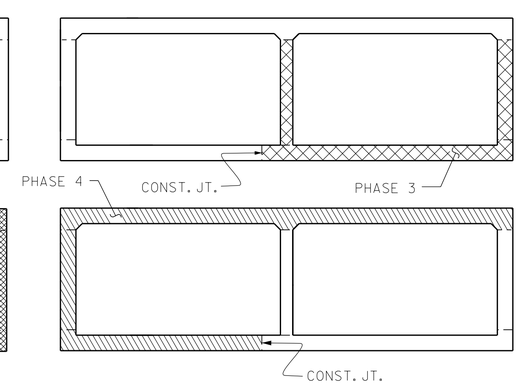

CONSTRUCTION PHASING

PHASE 3 CONSTRUCTION

PHASE 4 CONSTRUCTION

STAGE II

LOOKING UPSTREAM

NORTH CAROLINA PROFESSIONAL SEAL 14855 ENGINEER DOUGLAS R. CALHOUN
DocuSigned by: Douglas R. Calhoun 430196F9C5E0429...
3/14/2016

NORTH CAROLINA PROFESSIONAL SEAL 17230 ENGINEER WAEL S. ARAFAT
DocuSigned by: Wael Arafat 4139C12A32AB406...
3/14/2016

PROJECT NO. B-4792

POLK COUNTY

STATION: 12+81.60 -L-

SHEET 1 OF 13 REPLACES BRIDGE #4

STATE OF NORTH CAROLINA
DEPARTMENT OF TRANSPORTATION
RALEIGH

DOUBLE 11 FT. X 6 FT. CONCRETE BOX CULVERT 105° SKEW

REVISIONS						SHEET NO.
NO.	BY:	DATE:	NO.	BY:	DATE:	C-1
1			3			TOTAL SHEETS
2			4			13

DRAWN BY : V.X. NGUYEN DATE : 7-13-15
CHECKED BY : H.T. BARBOUR DATE : 8-3-15
DESIGN ENGINEER OF RECORD: A. M. LEE DATE : 9-15

14-MAR-2016 08:25
$$$$$$$$$$$$$$$$$$$$$$$$DGN$$$$$$$$$$$$$$$$$$$$$$$$
warafat AT SD-290338

DocuSign Envelope ID: A87BB1CC-193C-453E-B835-A1C31CA4A2E0

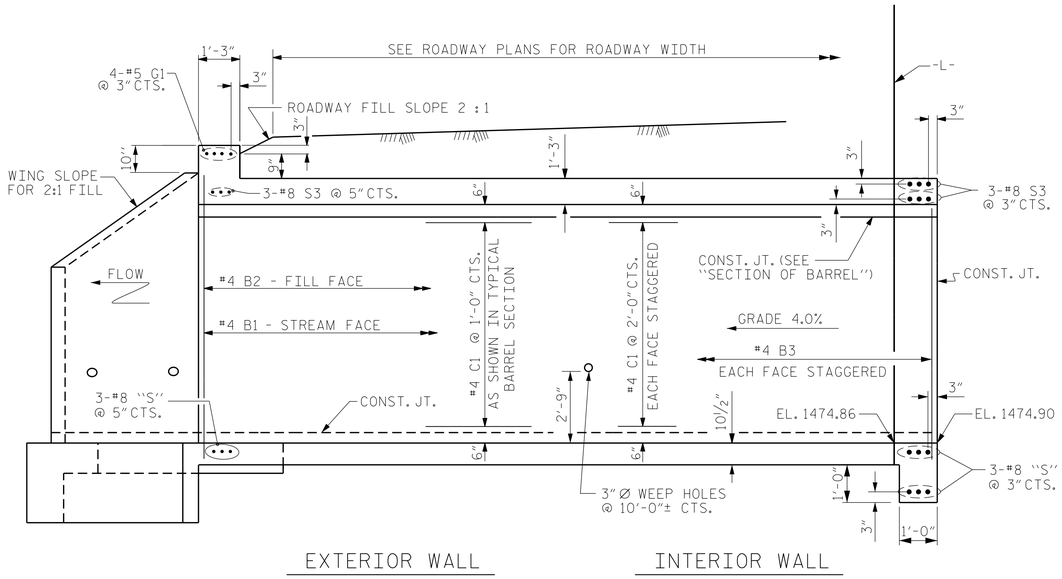

CULVERT SECTION NORMAL TO ROADWAY

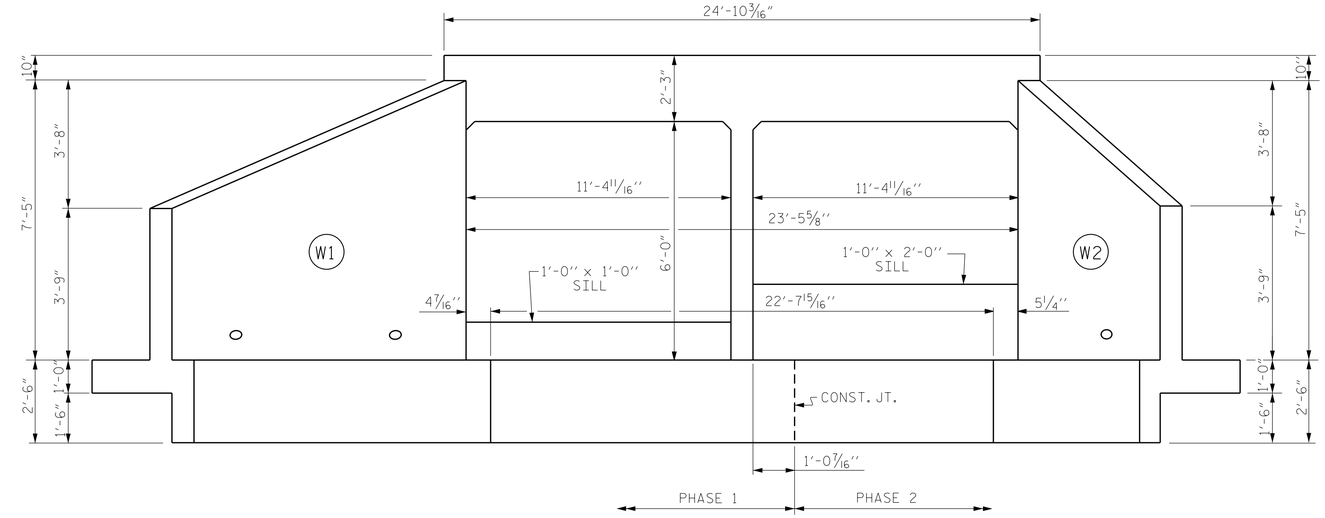

OUTLET END ELEVATION NORMAL TO SKEW

LOOKING UPSTREAM

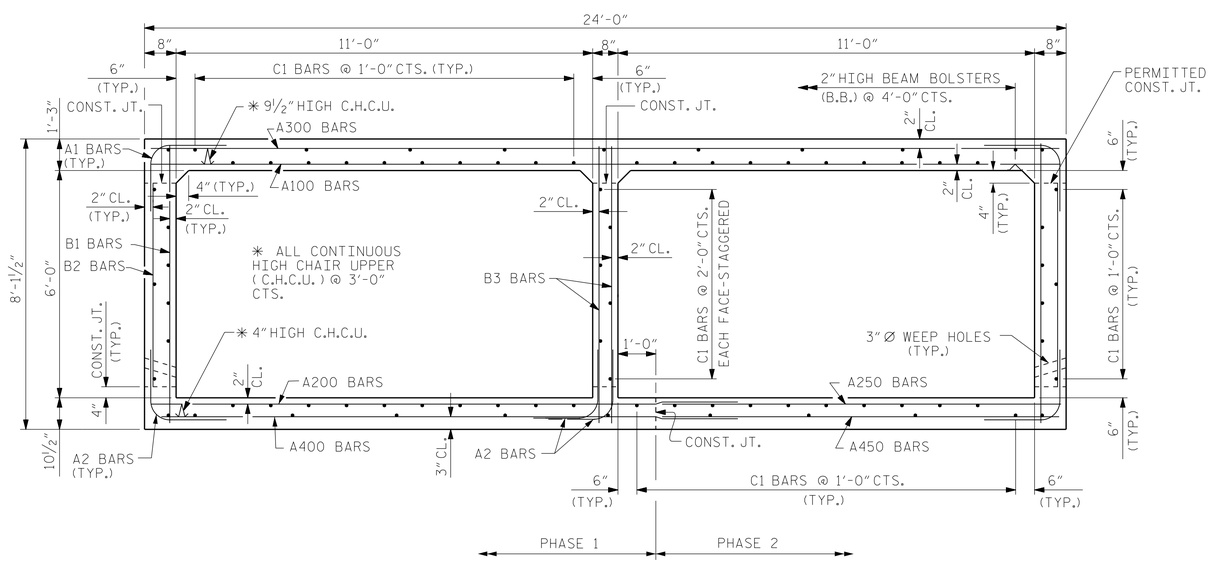

RIGHT ANGLE SECTION OF BARREL

THERE ARE 82 "C" BARS IN SECTION OF BARREL.
LOOKING UPSTREAM

PROJECT NO. B-4792
POLK COUNTY
STATION: 12+81.60 -L-

SHEET 2 OF 13

STATE OF NORTH CAROLINA
DEPARTMENT OF TRANSPORTATION
RALEIGH

DOUBLE 11 FT. X 6 FT. CONCRETE BOX CULVERT 105° SKEW STAGE I

NORTH CAROLINA PROFESSIONAL SEAL 17230 ENGINEER WAEL S. ARAFAT
DocuSigned by: Wael Arafat 4139C12A32AB406...
3/14/2016

REVISIONS						SHEET NO.
NO.	BY:	DATE:	NO.	BY:	DATE:	C-2
1			3			TOTAL SHEETS
2			4			13

DRAWN BY : V.X. NGUYEN DATE : 7-7-15
CHECKED BY : H.T. BARBOUR DATE : 8-3-15
DESIGN ENGINEER OF RECORD: A. M. LEE DATE : 9-15

14-MAR-2016 08:27
$$$$$$$$$$$$$$$$$$$$$$$$$$$$DGN$$$$$$$$$$$$$$$$$$$$$$$$$$
warafat AT SD-290338

DocuSign Envelope ID: A87BB1CC-193C-453E-B835-A1C31CA4A2E0

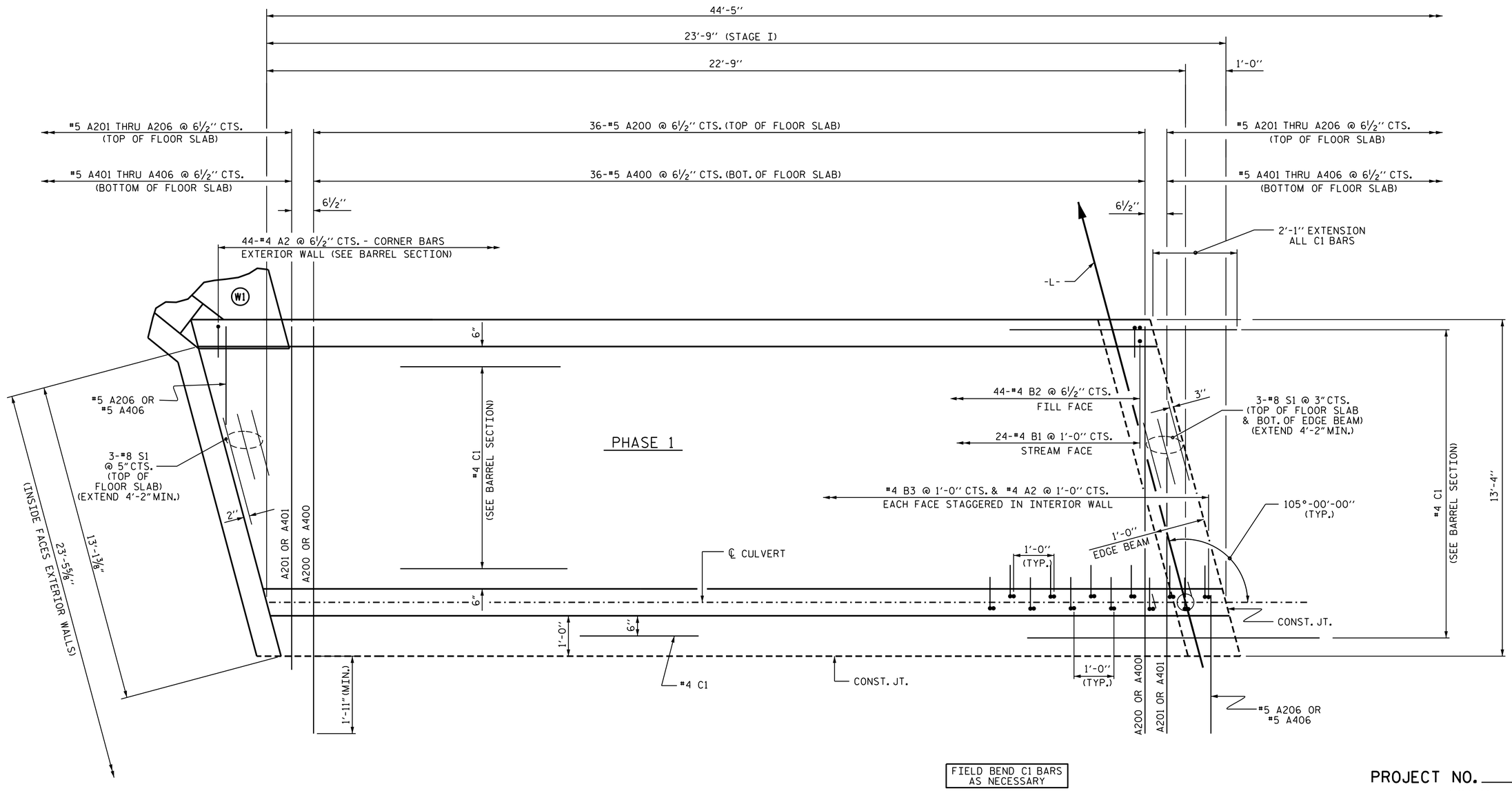

FIELD BEND C1 BARS AS NECESSARY

PLAN OF FLOOR SLAB

STAGE I - PHASE 1

PROJECT NO. B-4792

POLK COUNTY

STATION: 12+81.60 -L-

SHEET 3 OF 13

STATE OF NORTH CAROLINA
DEPARTMENT OF TRANSPORTATION
RALEIGH

DOUBLE 11 FT. X 6 FT. CONCRETE BOX CULVERT
105°-00'-00" SKEW
STAGE I - PHASE 1

NORTH CAROLINA PROFESSIONAL SEAL 17230 ENGINEER WAEL S. ARAFAT

DocuSigned by: Wael Arafat A130C12A32AB406... 10/29/2015

REVISIONS							SHEET NO.
NO.	BY:	DATE:	NO.	BY:	DATE:		C-3
1			3				TOTAL SHEETS
2			4				13

DRAWN BY :	V.X. NGUYEN	DATE :	7-9-15
CHECKED BY :	H.T. BARBOUR	DATE :	8-3-15
DESIGN ENGINEER OF RECORD:	A. M. LEE	DATE :	9-15

28-OCT-2015 16:14
V:\Structures\Plans\FINAL PLANS\B-4792_CU.dgn
warafat

DocuSign Envelope ID: A87BB1CC-193C-453E-B835-A1C31CA4A2E0

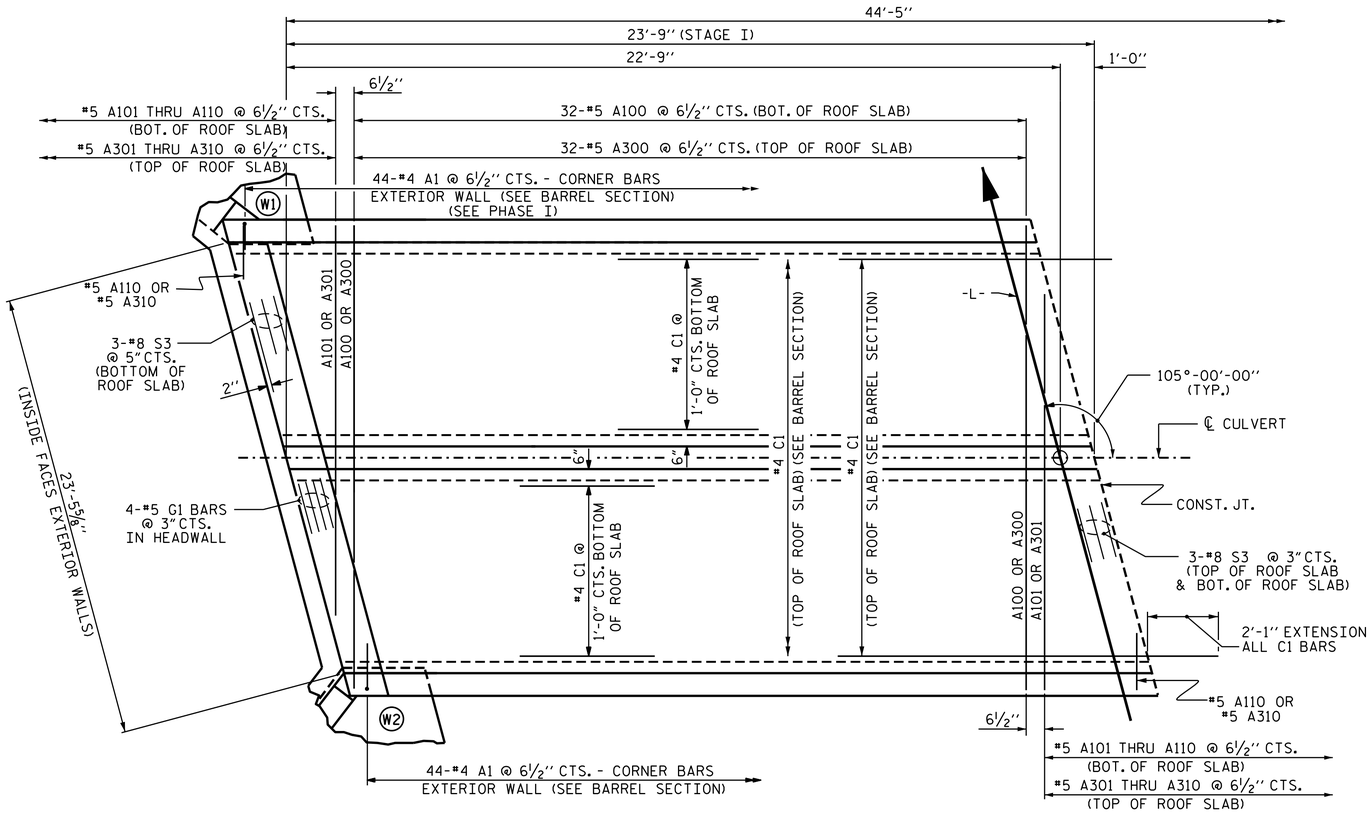

FIELD BEND C1 BARS AS NECESSARY

PLAN OF ROOF SLAB

STAGE I - PHASE 2

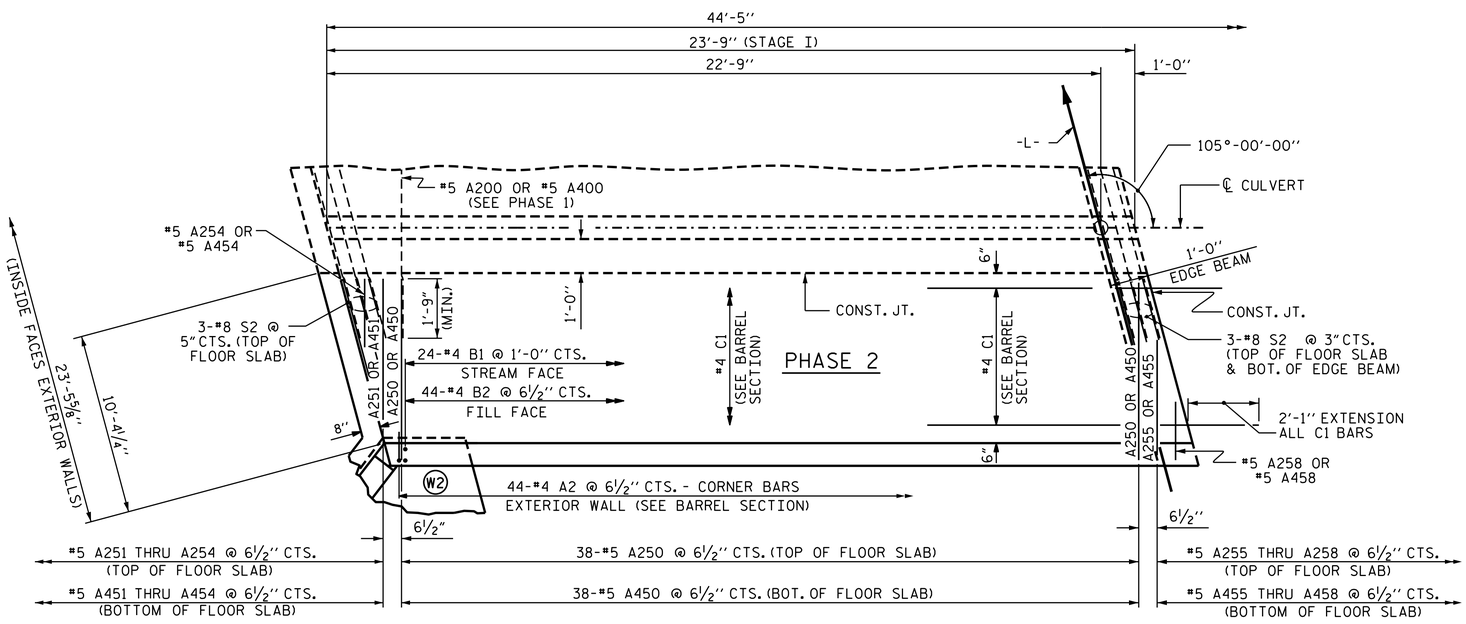

PLAN OF FLOOR SLAB

STAGE I - PHASE 2

PROJECT NO. B-4792

POLK COUNTY

STATION: 12+81.60 -L-

SHEET 4 OF 13

STATE OF NORTH CAROLINA
DEPARTMENT OF TRANSPORTATION
RALEIGH

DOUBLE 11 FT. X 6 FT. CONCRETE BOX CULVERT 105°-00'-00" SKEW

STAGE I - PHASE 2

NORTH CAROLINA PROFESSIONAL SEAL 17230 ENGINEER WAEL S. ARAFAT

DocuSigned by: Wael Arafat
10/29/2015

REVISIONS						SHEET NO.
NO.	BY:	DATE:	NO.	BY:	DATE:	C-4
1			3			TOTAL SHEETS
2			4			13

DRAWN BY : V.X. NGUYEN DATE : 7-10-15
CHECKED BY : H.T. BARBOUR DATE : 8-3-15
DESIGN ENGINEER OF RECORD: A.M. LEE DATE : 9-15

28-OCT-2015 16:15
V:\Structures\Plans\FINAL PLANS\B-4792_CU.dgn
warafat

DocuSign Envelope ID: A87BB1CC-193C-453E-B835-A1C31CA4A2E0

SPLICE LENGTH CHART

BAR	SIZE	SPLICE LENGTH
A200 & A400	5	1'-9"
B1 & B3	4	1'-5"
C1	4	1'-11"
S1, S2 & S3	8	4'-0"

BAR TYPE

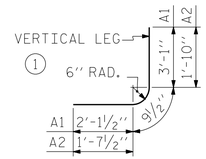

BAR DIMENSIONS ARE OUT TO OUT

STAGE I QUANTITIES

CLASS A CONCRETE

BARREL @ 2.342 CY/FT 55.6 CY

WINGS, ETC. 10.6 CY

SILLS 2.4 CY

TOTAL 68.6 CY

REINFORCING STEEL

BARREL & SILLS 8752 LBS.

WINGS, ETC. 466 LBS.

TOTAL 9218 LBS.

CULVERT EXCAVATION --------- LUMP SUM

FOUNDATION COND. MAT'L -------- 47 TONS

BAR SCHEDULE

STAGE I - PHASE 1

BAR	NO.	SIZE	TYPE	LENGTH	WEIGHT
A1	44	4	1	6'-0"	176
A2	91	4	1	4'-3"	258
A200	36	5	STR	15'-1"	566
A201	2	5	STR	13'-9"	29
A202	2	5	STR	11'-9"	25
A203	2	5	STR	9'-9"	20
A204	2	5	STR	7'-8"	16
A205	2	5	STR	5'-8"	12
A206	2	5	STR	3'-8"	8
A400	36	5	STR	15'-1"	566
A401	2	5	STR	13'-9"	29
A402	2	5	STR	11'-9"	25
A403	2	5	STR	9'-9"	20
A404	2	5	STR	7'-8"	16
A405	2	5	STR	5'-8"	12
A406	2	5	STR	3'-8"	8
B1	24	4	STR	7'-7"	122
B2	44	4	STR	5'-4"	157
B3	47	4	STR	7'-7"	238
C1	30	4	STR	25'-8"	514
D1	6	6	STR	1'-5"	13
S1	9	8	STR	17'-10"	429

REINFORCING STEEL = 3259 LBS.

STAGE I - PHASE 2

BAR	NO.	SIZE	TYPE	LENGTH	WEIGHT
A1	44	4	1	6'-0"	176
A2	44	4	1	4'-3"	125
A100	32	5	STR	23'-8"	790
A101	2	5	STR	22'-1"	46
A102	2	5	STR	20'-1"	42
A103	2	5	STR	18'-1"	38
A104	2	5	STR	16'-1"	34
A105	2	5	STR	14'-0"	29
A106	2	5	STR	12'-0"	25
A107	2	5	STR	10'-0"	21
A108	2	5	STR	8'-0"	17
A109	2	5	STR	5'-11"	12
A110	2	5	STR	3'-11"	8
A250	38	5	STR	10'-4"	410
A251	1	5	STR	8'-6"	9
A252	1	5	STR	6'-6"	7
A253	1	5	STR	4'-6"	5
A254	1	5	STR	2'-6"	3
A255	1	5	STR	10'-3"	11
A256	1	5	STR	8'-2"	9
A257	1	5	STR	6'-2"	6
A258	1	5	STR	4'-2"	4
A300	32	5	STR	23'-8"	790
A301	2	5	STR	22'-1"	46
A302	2	5	STR	20'-1"	42
A303	2	5	STR	18'-1"	38
A304	2	5	STR	16'-1"	34
A305	2	5	STR	14'-0"	29
A306	2	5	STR	12'-0"	25
A307	2	5	STR	10'-0"	21
A308	2	5	STR	8'-0"	17
A309	2	5	STR	5'-11"	12
A310	2	5	STR	3'-11"	8

BAR	NO.	SIZE	TYPE	LENGTH	WEIGHT
A450	38	5	STR	10'-4"	410
A451	1	5	STR	8'-6"	9
A452	1	5	STR	6'-6"	7
A453	1	5	STR	4'-6"	5
A454	1	5	STR	2'-6"	3
A455	1	5	STR	10'-3"	11
A456	1	5	STR	8'-2"	9
A457	1	5	STR	6'-2"	6
A458	1	5	STR	4'-2"	4
B1	24	4	STR	7'-7"	122
B2	44	4	STR	5'-4"	157
C1	52	4	STR	25'-8"	892
D2	6	6	STR	2'-5"	22
G1	4	5	STR	24'-6"	102
S2	9	8	STR	10'-8"	256
S3	9	8	STR	24'-6"	589

REINFORCING STEEL = 5493 LBS.

PROJECT NO. B-4792

POLK COUNTY

STATION: 12+81.60 -L-

SHEET 5 OF 13

STATE OF NORTH CAROLINA
DEPARTMENT OF TRANSPORTATION
RALEIGH

DOUBLE 11 FT. X 6 FT. CONCRETE BOX CULVERT 105°-00'-00" SKEW

STAGE I - PHASES 1 & 2

NORTH CAROLINA PROFESSIONAL SEAL 17230 ENGINEER WAEL S. ARAFAT

DocuSigned by: Wael Arafat
4139C12A32AB406...
3/14/2016

REVISIONS						SHEET NO.
NO.	BY:	DATE:	NO.	BY:	DATE:	C-5
1			3			TOTAL SHEETS
2			4			13

DRAWN BY : V.X. NGUYEN DATE : 7-10-15
CHECKED BY : H.T. BARBOUR DATE : 8-3-15
DESIGN ENGINEER OF RECORD: A. M. LEE DATE : 9-15

14-MAR-2016 08:32
$$$$$$$$$$$$$$$$$$$$$$$$DGN$$$$$$$$$$$$$$$$$$$$$$$$
warafat AT SD-290338

DocuSign Envelope ID: A87BB1CC-193C-453E-B835-A1C31CA4A2E0

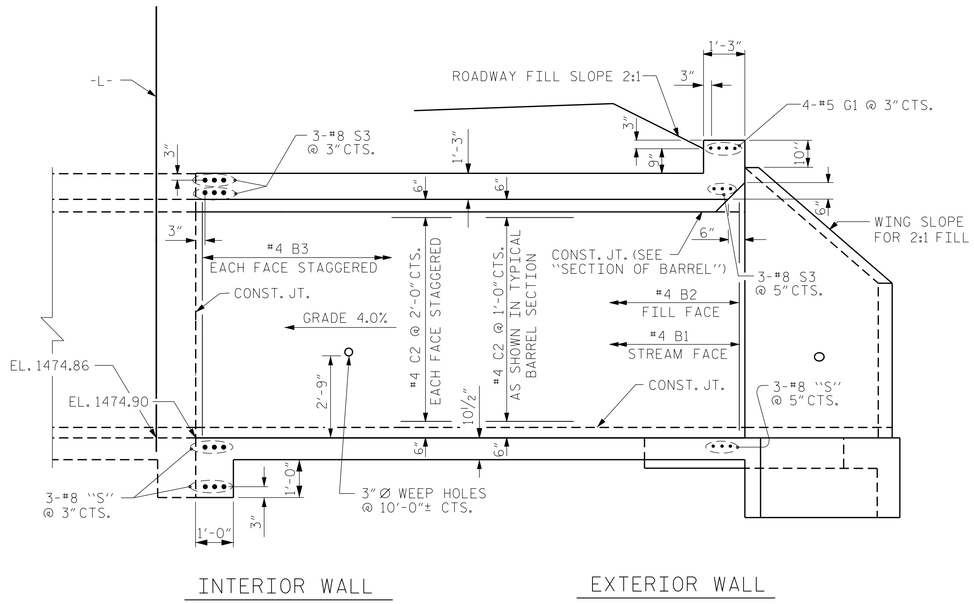

INTERIOR WALL

EXTERIOR WALL

CULVERT SECTION NORMAL TO ROADWAY

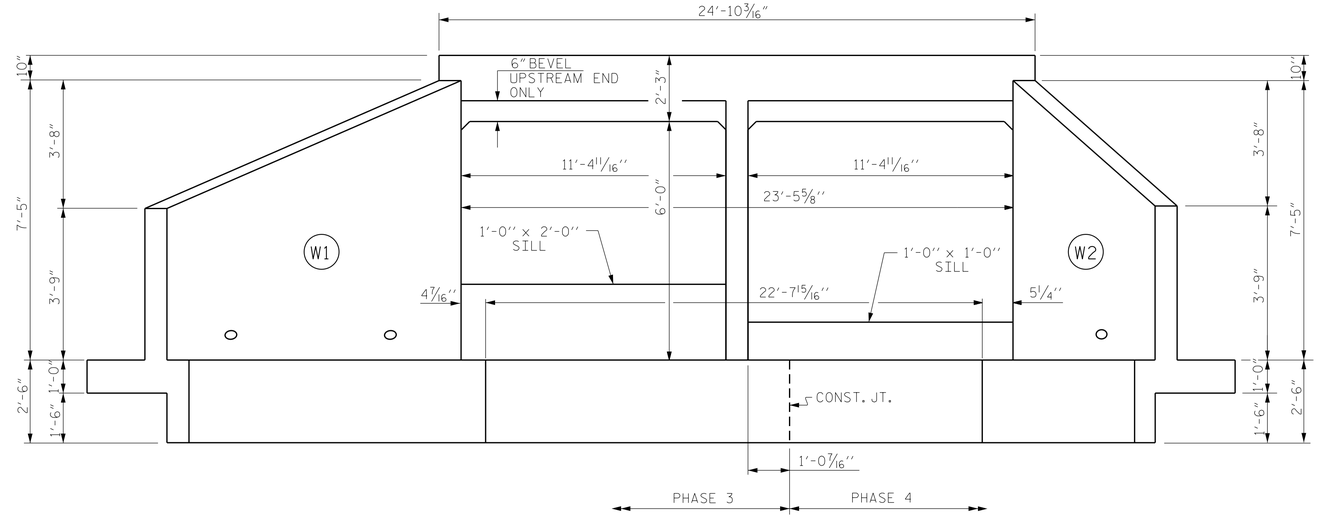

INLET END ELEVATION NORMAL TO SKEW

LOOKING DOWNSTREAM

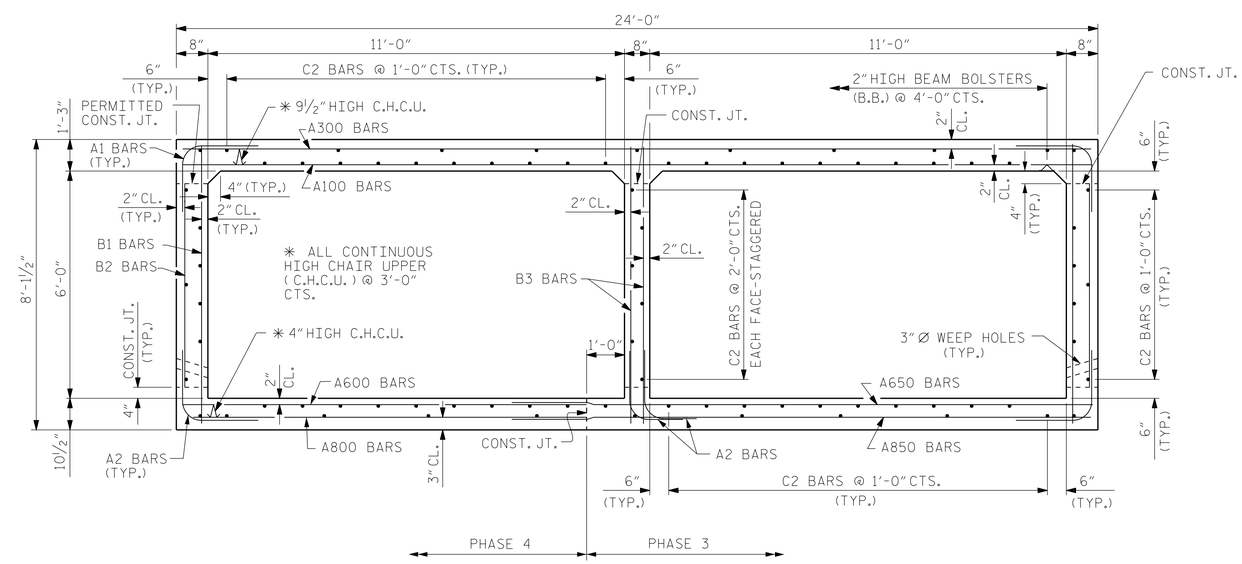

RIGHT ANGLE SECTION OF BARREL

THERE ARE 82 "C" BARS IN SECTION OF BARREL.
LOOKING UPSTREAM

PROJECT NO. B-4792

POLK COUNTY

STATION: 12+81.60 -L-

SHEET 6 OF 13

STATE OF NORTH CAROLINA
DEPARTMENT OF TRANSPORTATION
RALEIGH

DOUBLE 11 FT. X 6 FT. CONCRETE BOX CULVERT 105° SKEW STAGE II

NORTH CAROLINA PROFESSIONAL SEAL 17230 ENGINEER WAEL S. ARAFAT

DocuSigned by: Wael Arafat
4139C12A32AB406...
3/14/2016

REVISIONS						SHEET NO.
NO.	BY:	DATE:	NO.	BY:	DATE:	C-6
1			3			TOTAL SHEETS
2			4			13

DRAWN BY : V.X. NGUYEN DATE : 7-9-15
CHECKED BY : H.T. BARBOUR DATE : 8-3-15
DESIGN ENGINEER OF RECORD: A. M. LEE DATE : 9-15

14-MAR-2016 08:34
$$$$$$$$$$$$$$$$$$$$$$$$$$DGN$$$$$$$$$$$$$$$$$$$$$$$$$$
warafat AT SD-290338

DocuSign Envelope ID: A87BB1CC-193C-453E-B835-A1C31CA4A2E0

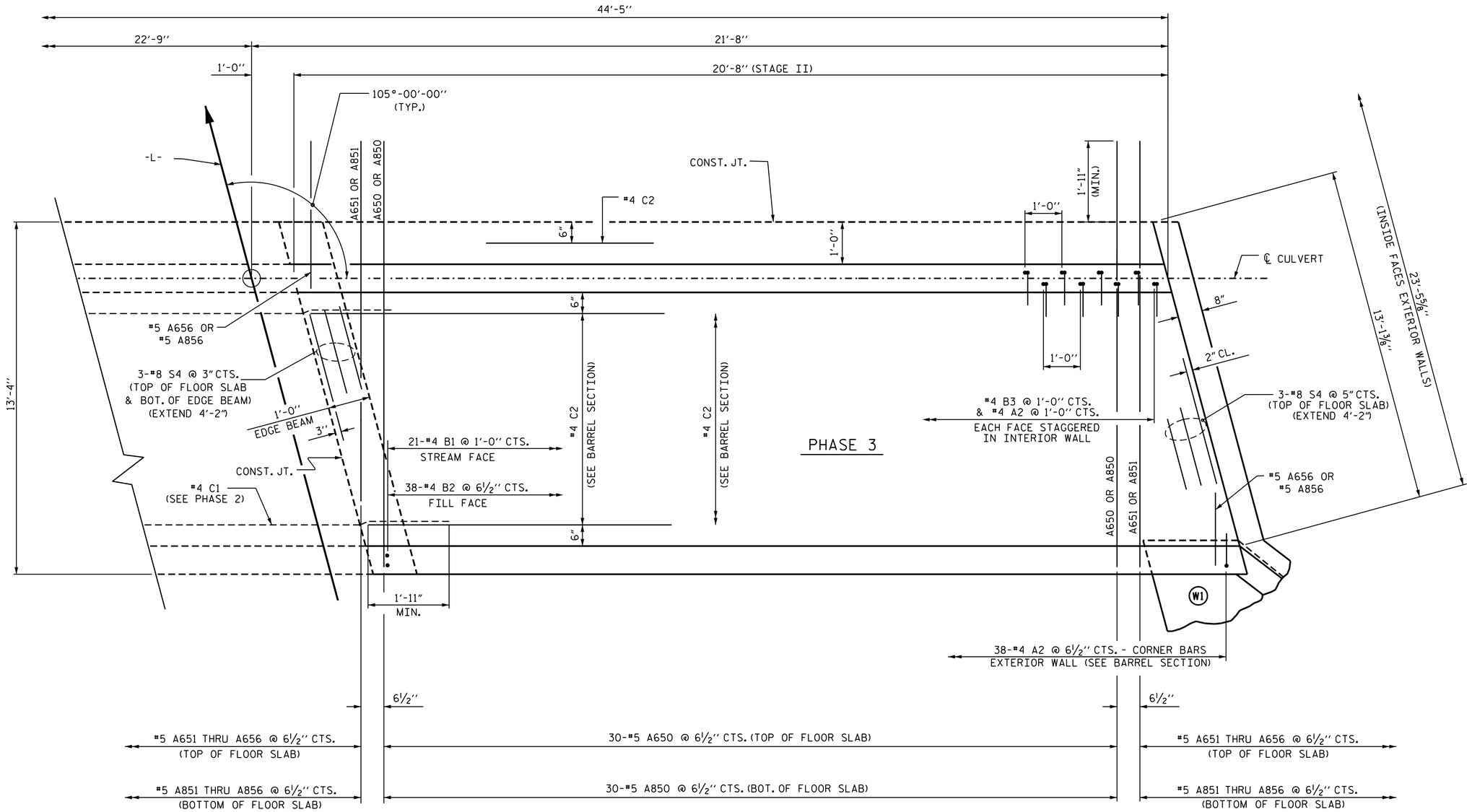

PLAN OF FLOOR SLAB

STAGE II - PHASE 3

PROJECT NO. B-4792

POLK COUNTY

STATION: 12+81.60 -L-

SHEET 7 OF 13

STATE OF NORTH CAROLINA
DEPARTMENT OF TRANSPORTATION
RALEIGH

DOUBLE 11 FT. X 6 FT. CONCRETE BOX CULVERT 105°-00'-00" SKEW

STAGE II - PHASE 3

NORTH CAROLINA PROFESSIONAL SEAL 17230 ENGINEER WAEL S. ARAFAT

DocuSigned by: Wael Arafat 10/29/2015

REVISIONS								SHEET NO.
NO.	BY:	DATE:	NO.	BY:	DATE:			C-7
1			3					TOTAL SHEETS
2			4					13

DRAWN BY : V.X. NGUYEN DATE : 7-9-15
CHECKED BY : H.T. BARBOUR DATE : 8-3-15
DESIGN ENGINEER OF RECORD: A. M. LEE DATE : 9-15

28-OCT-2015 16:21
V:\Structures\Plans\FINAL PLANS\B-4792_CU.dgn
warafat

DocuSign Envelope ID: A87BB1CC-193C-453E-B835-A1C31CA4A2E0

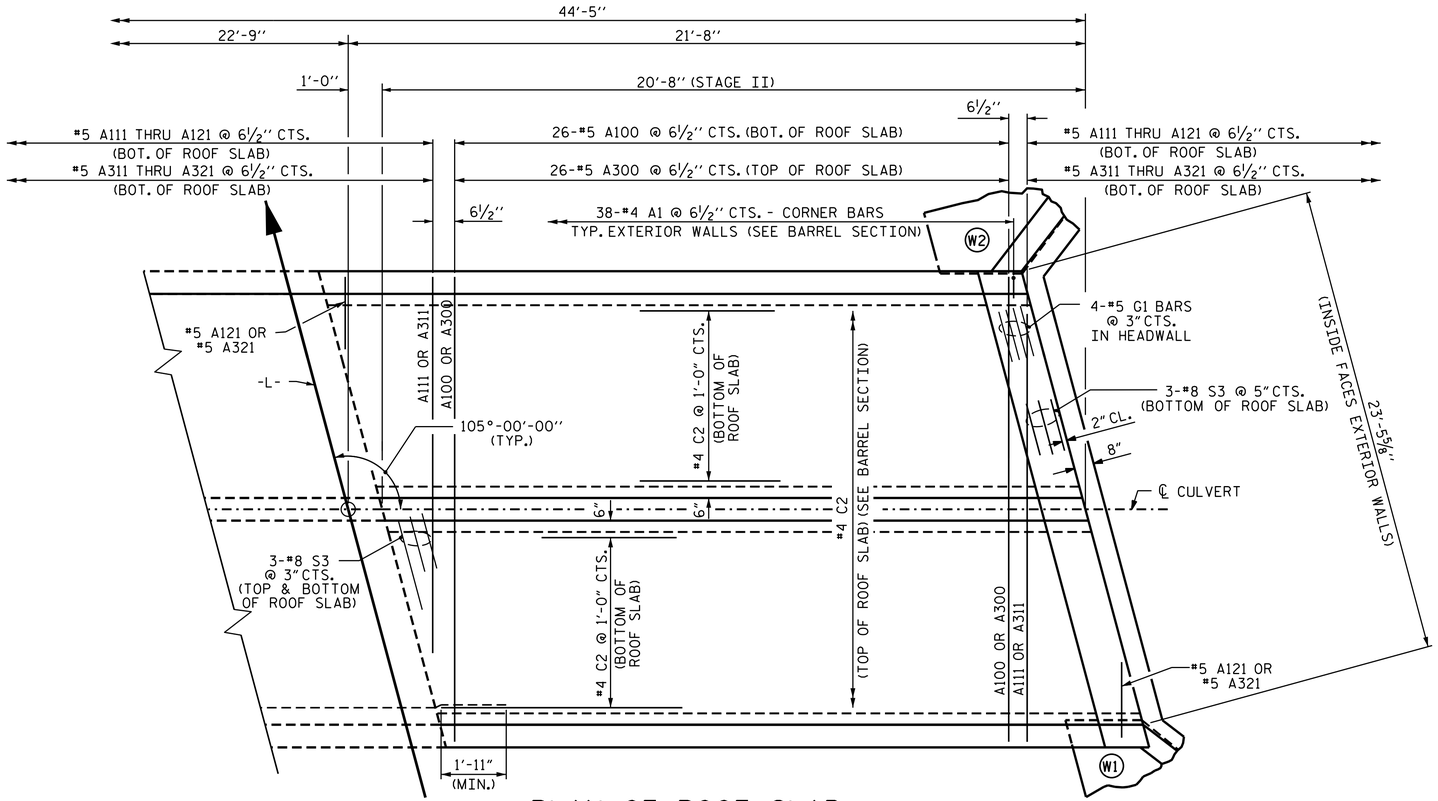

PLAN OF ROOF SLAB

STAGE II - PHASE 4

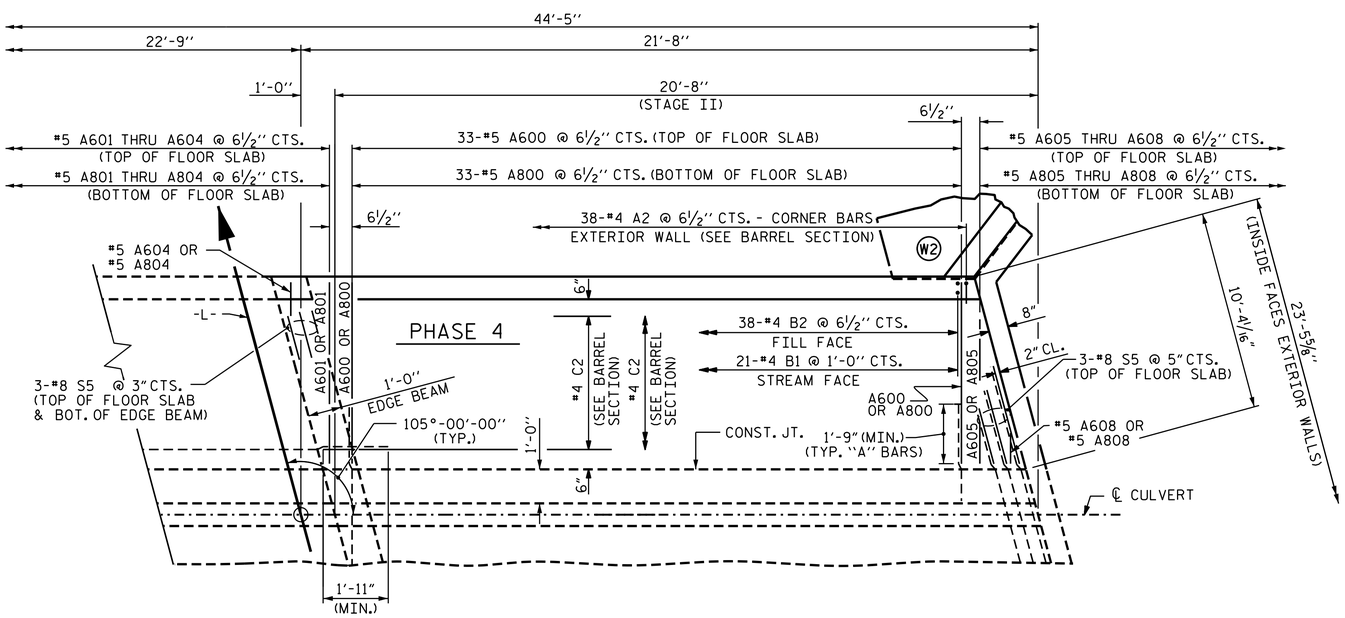

PLAN OF FLOOR SLAB

STAGE II - PHASE 4

PROJECT NO. B-4792

POLK COUNTY

STATION: 12+81.60 -L-

SHEET 8 OF 13

STATE OF NORTH CAROLINA
DEPARTMENT OF TRANSPORTATION
RALEIGH

DOUBLE 11 FT. X 6 FT. CONCRETE BOX CULVERT 105°-00'-00" SKEW

STAGE II - PHASE 4

NORTH CAROLINA PROFESSIONAL SEAL 17230 ENGINEER WAEL S. ARAFAT

DocuSigned by: Wael Arafat
A13BC12A32AB406...
10/29/2015

REVISIONS						SHEET NO.
NO.	BY:	DATE:	NO.	BY:	DATE:	C-8
1			3			TOTAL SHEETS
2			4			13

DRAWN BY : V.X. NGUYEN DATE : 7-13-15
CHECKED BY : H.T. BARBOUR DATE : 8-3-15
DESIGN ENGINEER OF RECORD: A. M. LEE DATE : 9-15

28-OCT-2015 16:21
V:\Structures\Plans\FINAL PLANS\B-4792_CU.dgn
warafat

DocuSign Envelope ID: A87BB1CC-193C-453E-B835-A1C31CA4A2E0

SPLICE LENGTH CHART

BAR	SIZE	SPLICE LENGTH
A650 & A850	5	1'-9"
B1 & B3	4	1'-5"
C2	4	1'-11"
S3, S4 & S5	8	4'-0"

BAR TYPE

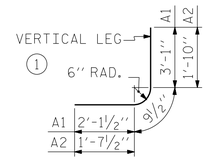

BAR DIMENSIONS ARE OUT TO OUT

STAGE II QUANTITIES

CLASS A CONCRETE

BARREL @ 2.342 CY/FT 48.4 CY

WINGS, ETC. 10.6 CY

SILLS 1.2 CY

TOTAL 60.2 CY

REINFORCING STEEL

BARREL & SILLS 7662 LBS.

WINGS, ETC. 466 LBS.

TOTAL 8128 LBS.

CULVERT EXCAVATION --------- LUMP SUM

FOUNDATION COND. MAT'L -------- 41 TONS

BAR SCHEDULE

STAGE II - PHASE 3

BAR	NO.	SIZE	TYPE	LENGTH	WEIGHT
A1	38	4	1	6'-0"	152
A2	79	4	1	4'-3"	224
A650	30	5	STR	15'-1"	472
A651	2	5	STR	13'-11"	29
A652	2	5	STR	12'-1"	25
A653	2	5	STR	10'-1"	21
A654	2	5	STR	8'-1"	17
A655	2	5	STR	6'-0"	13
A656	2	5	STR	4'-0"	8
A850	30	5	STR	15'-1"	472
A851	2	5	STR	13'-11"	29
A852	2	5	STR	12'-1"	25
A853	2	5	STR	10'-1"	21
A854	2	5	STR	8'-1"	17
A855	2	5	STR	6'-0"	13
A856	2	5	STR	4'-0"	8
B1	21	4	STR	7'-7"	106
B2	38	4	STR	5'-4"	135
B3	41	4	STR	7'-7"	208
C2	30	4	STR	20'-4"	407
D2	3	6	STR	2'-5"	11
S4	9	8	STR	17'-10"	429

REINFORCING STEEL = 2842 LBS.

STAGE II - PHASE 4

BAR	NO.	SIZE	TYPE	LENGTH	WEIGHT
A1	38	4	1	6'-0"	152
A2	38	4	1	4'-3"	108
A100	26	5	STR	23'-8"	642
A111	2	5	STR	22'-5"	47
A112	2	5	STR	20'-5"	43
A113	2	5	STR	18'-5"	38
A114	2	5	STR	16'-4"	34
A115	2	5	STR	14'-4"	30
A116	2	5	STR	12'-4"	26
A117	2	5	STR	10'-4"	22
A118	2	5	STR	8'-3"	17
A119	2	5	STR	6'-3"	13
A120	2	5	STR	4'-3"	9
A121	2	5	STR	2'-2"	5
A300	26	5	STR	23'-8"	642
A311	2	5	STR	22'-5"	47
A312	2	5	STR	20'-5"	43
A313	2	5	STR	18'-5"	38
A314	2	5	STR	16'-4"	34
A315	2	5	STR	14'-4"	30
A316	2	5	STR	12'-4"	26
A317	2	5	STR	10'-4"	22
A318	2	5	STR	8'-3"	17
A319	2	5	STR	6'-3"	13
A320	2	5	STR	4'-3"	9
A321	2	5	STR	2'-2"	5
A600	33	5	STR	10'-4"	356
A601	1	5	STR	8'-6"	9
A602	1	5	STR	6'-6"	7
A603	1	5	STR	4'-5"	5
A604	1	5	STR	2'-5"	3
A605	1	5	STR	8'-10"	9
A606	1	5	STR	6'-10"	7
A607	1	5	STR	4'-10"	5
A608	1	5	STR	2'-10"	3

BAR	NO.	SIZE	TYPE	LENGTH	WEIGHT
A800	33	5	STR	10'-4"	356
A801	1	5	STR	8'-6"	9
A802	1	5	STR	6'-6"	7
A803	1	5	STR	4'-5"	5
A804	1	5	STR	2'-5"	3
A805	1	5	STR	8'-10"	9
A806	1	5	STR	6'-10"	7
A807	1	5	STR	4'-10"	5
A808	1	5	STR	2'-10"	3
B1	21	4	STR	7'-7"	106
B2	38	4	STR	5'-4"	135
C2	52	4	STR	20'-4"	706
D1	3	6	STR	1'-5"	6
G1	4	5	STR	24'-6"	102
S3	9	8	STR	24'-6"	589
S5	9	8	STR	10'-8"	256

REINFORCING STEEL = 4820 LBS.

PROJECT NO. B-4792

POLK COUNTY

STATION: 12+81.60 -L-

SHEET 9 OF 13

STATE OF NORTH CAROLINA
DEPARTMENT OF TRANSPORTATION
RALEIGH

DOUBLE 11 FT. X 6 FT. CONCRETE BOX CULVERT 105°-00'-00" SKEW

STAGE II - PHASES 3 & 4

NORTH CAROLINA PROFESSIONAL SEAL 17230 ENGINEER WAEL S. ARAFAT

DocuSigned by: Wael Arafat 413BC12A32AB406...
3/14/2016

REVISIONS						SHEET NO.
NO.	BY:	DATE:	NO.	BY:	DATE:	C-9
1			3			TOTAL SHEETS
2			4			13

DRAWN BY : V.X. NGUYEN DATE : 7-13-15
CHECKED BY : H.T. BARBOUR DATE : 8-3-15
DESIGN ENGINEER OF RECORD: A. M. LEE DATE : 9-15

14-MAR-2016 08:37
$$$$$$$$$$$$$$$$$$$$$$$$DGN$$$$$$$$$$$$$$$$$$$$$$$$
warafat AT SD-290338

DocuSign Envelope ID: A87BB1CC-193C-453E-B835-A1C31CA4A2E0

NOTES

MATERIAL EXCAVATED FROM THE EXISTING BED SHALL BE STOCKPILED FOR USE IN THE PROPOSED CULVERT AS SHOWN IN THE FLOOR SILL LAYOUT. BED MATERIAL SHALL BE SUPPLEMENTED WITH CHANNEL SUBSTRATE MATERIAL AS NECESSARY. BED MATERIAL SHALL BE SUBJECT TO APPROVAL BY THE ENGINEER. FOR CHANNEL SUBSTRATE MATERIAL, SEE SPECIAL PROVISIONS.

THE ENTIRE COST OF WORK REQUIRED TO PLACE THE EXCAVATED MATERIAL AS SHOWN ON THE PLANS SHALL BE INCLUDED IN THE CONTACT LUMP SUM PRICE BID FOR CULVERT EXCAVATION.

THE ENTIRE COST OF WORK REQUIRED TO CONSTRUCT THE SILLS/BAFFLES SHALL BE INCLUDED IN THE VARIOUS PAY ITEMS.

THE STOCKPILED MATERIAL SHALL BE PLACED IN THE CULVERT BARREL TO A DEPTH OF 2'-0" IN THE HIGH FLOW BARREL AND 1'-0" IN THE LOW FLOW BARREL.

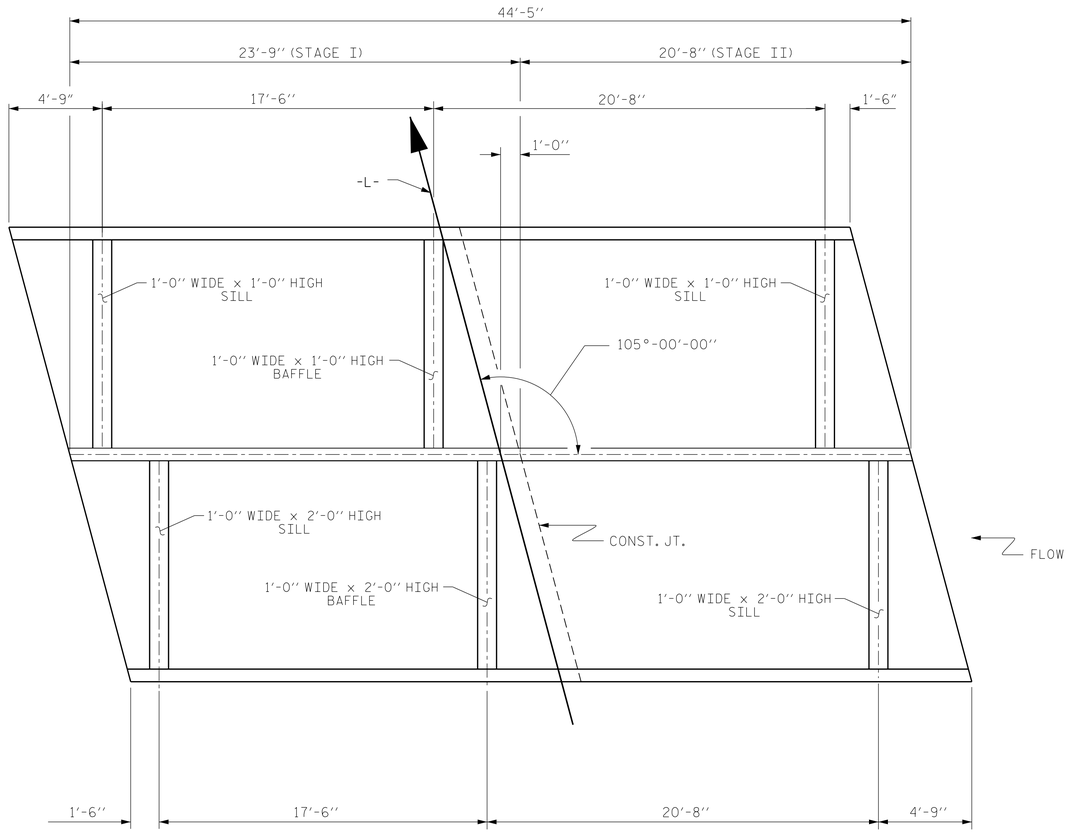

FLOOR SILL/BAFFLE LAYOUT

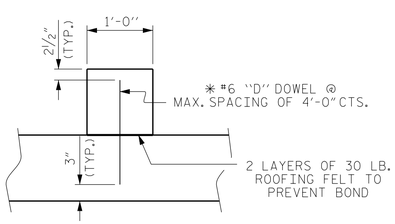

✳ DOWELS MAY BE PUSHED INTO GREEN CONCRETE AFTER SLAB HAS BEEN FLOAT FINISHED.

SECTION THRU SILL/BAFFLE

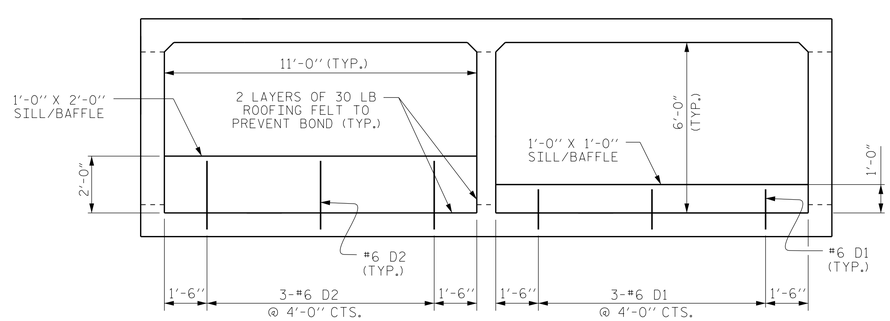

ELEVATION

(LOOKING DOWNSTREAM)

CULVERT SILL/BAFFLE DETAILS

PROJECT NO. B-4792

POLK COUNTY

STATION: 12+81.60 -L-

SHEET 10 OF 13

STATE OF NORTH CAROLINA
DEPARTMENT OF TRANSPORTATION
RALEIGH

DOUBLE 11 FT. X 6 FT.
CONCRETE BOX CULVERT
105°-00'-00" SKEW

NORTH CAROLINA PROFESSIONAL SEAL 17230 ENGINEER WAEL S. ARAFAT

DocuSigned by: Wael Arafat
413BC12A32AB406...
3/14/2016

REVISIONS						SHEET NO.
NO.	BY:	DATE:	NO.	BY:	DATE:	C-10
1			3			TOTAL SHEETS
2			4			13

DRAWN BY : V.X. NGUYEN DATE : 7-13-15
CHECKED BY : H.T. BARBOUR DATE : 8-3-15
DESIGN ENGINEER OF RECORD: A. M. LEE DATE : 9-15

14-MAR-2016 08:38
$$$$$$$$$$$$$$$$$$$$$$$$DGN$$$$$$$$$$$$$$$$$$$$$$$$
warafat AT SD-290338

DocuSign Envelope ID: A87BB1CC-193C-453E-B835-A1C31CA4A2E0

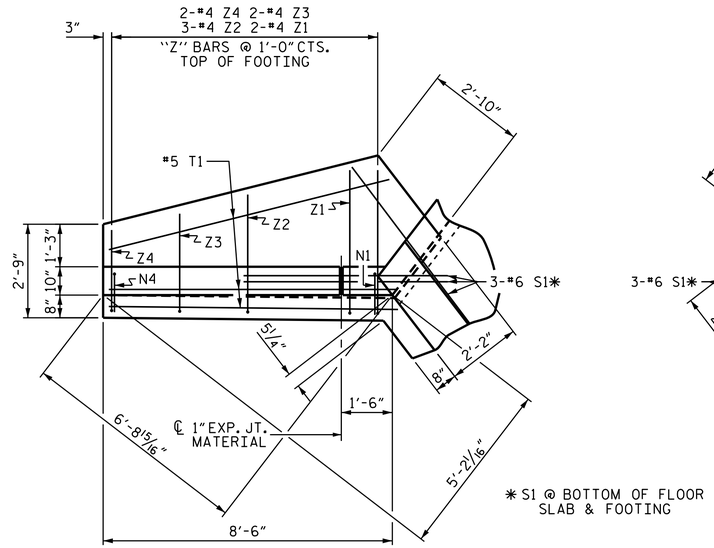

* S1 @ BOTTOM OF FLOOR SLAB & FOOTING

PLAN W2

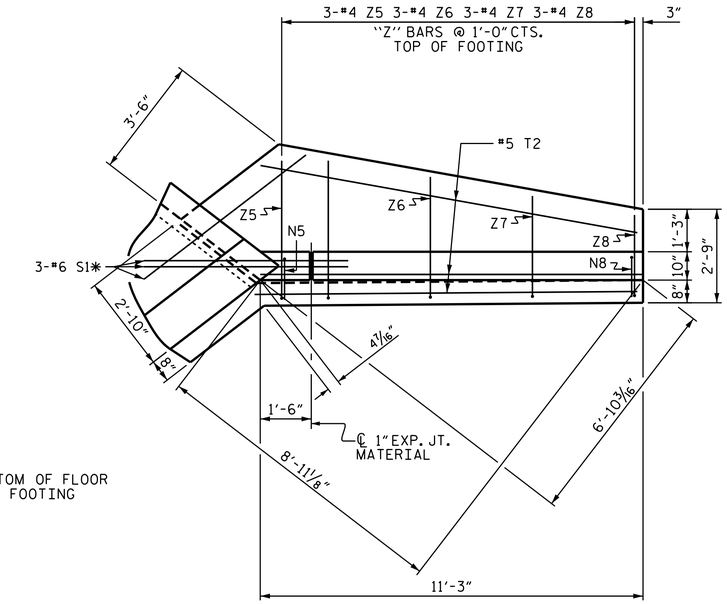

PLAN W1

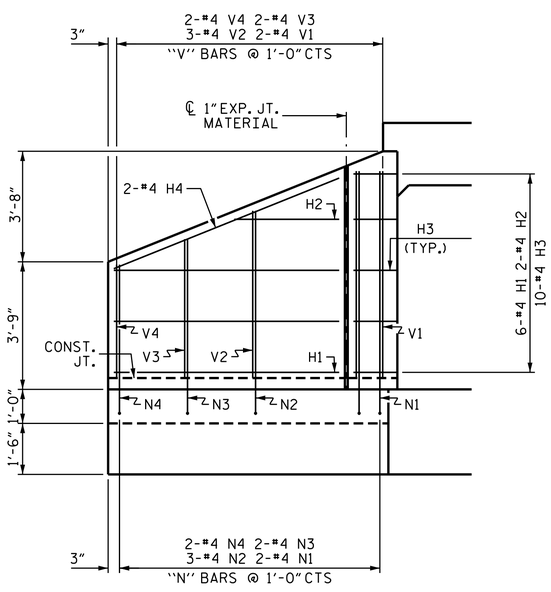

ELEVATION W2

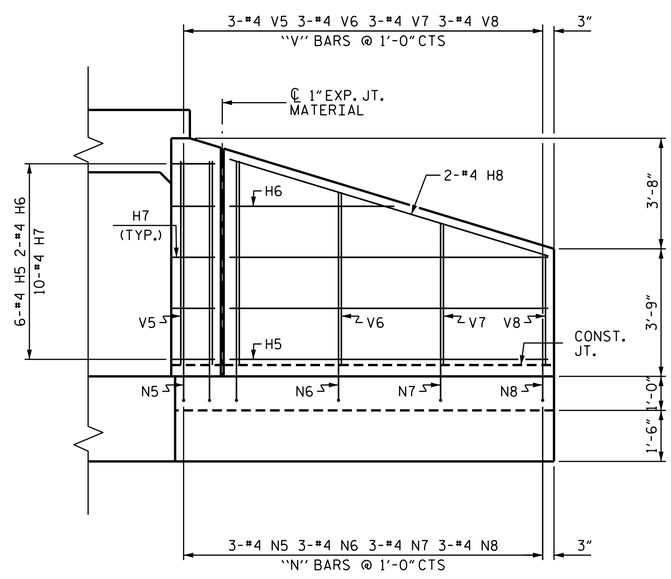

ELEVATION W1

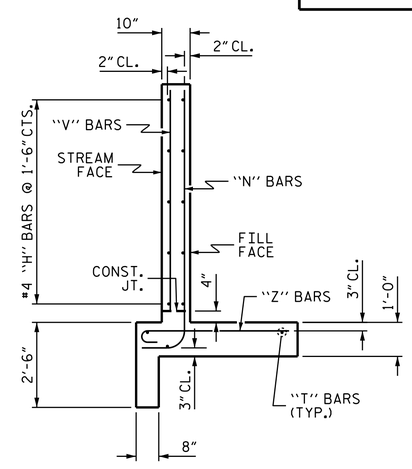

TYPICAL WING SECTION

BAR TYPES

ALL BAR DIMENSIONS ARE OUT TO OUT.

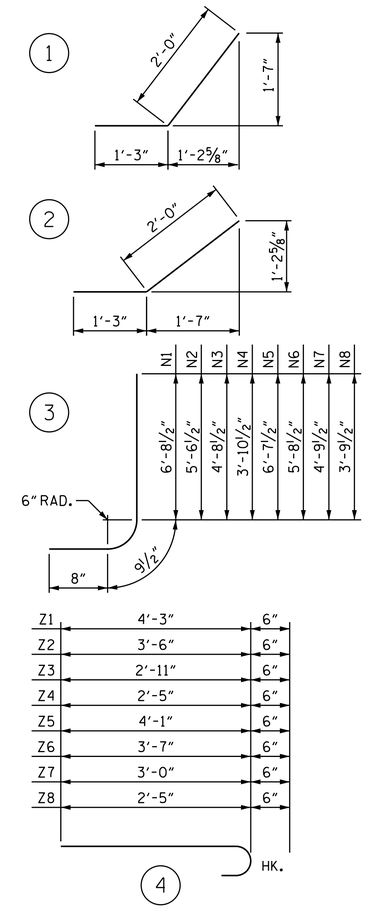

BILL OF MATERIAL

BAR	NO.	SIZE	TYPE	LENGTH	WEIGHT
H1	6	#4	STR	6'-7"	26
H2	2	#4	STR	3'-1"	4
H3	10	#4	1	3'-3"	22
H4	2	#4	STR	7'-1"	9
H5	6	#4	STR	9'-4"	37
H6	2	#4	STR	4'-10"	6
H7	10	#4	2	3'-3"	22
H8	2	#4	STR	9'-9"	13
N1	2	#4	3	8'-2"	11
N2	3	#4	3	7'-1"	14
N3	2	#4	3	6'-2"	8
N4	2	#4	3	5'-4"	7
N5	3	#4	3	8'-1"	16
N6	3	#4	3	7'-2"	14
N7	3	#4	3	6'-3"	13
N8	3	#4	3	5'-3"	11
S1	6	#6	STR	6'-0"	54
T1	3	#5	STR	8'-6"	27
T2	3	#5	STR	11'-3"	35
V1	2	#4	STR	6'-1"	8
V2	3	#4	STR	4'-11"	10
V3	2	#4	STR	4'-1"	5
V4	2	#4	STR	3'-4"	4
V5	3	#4	STR	6'-0"	12
V6	3	#4	STR	5'-1"	10
V7	3	#4	STR	4'-2"	8
V8	3	#4	STR	3'-3"	7
Z1	2	#4	4	4'-9"	6
Z2	3	#4	4	4'-0"	8
Z3	2	#4	4	3'-5"	5
Z4	2	#4	4	2'-11"	4
Z5	3	#4	4	4'-7"	9
Z6	3	#4	4	4'-1"	8
Z7	3	#4	4	3'-6"	7
Z8	3	#4	4	2'-11"	6

REINFORCING STEEL FOR 2 WINGS	466	LBS
CLASS A CONCRETE		
2 WINGS	7.1	CY
1 HEADWALL	1.2	CY
1 END CURTAIN WALL	1.4	CY
1 EDGE BEAM	.9	CY
TOTAL	10.6	CY

PROJECT NO. B-4792
POLK COUNTY
STATION: 12+81.60 -L-

SHEET 11 OF 13

STATE OF NORTH CAROLINA
DEPARTMENT OF TRANSPORTATION
RALEIGH

STANDARD WINGS
FOR
CONCRETE BOX CULVERT
H = 6'-0" SLOPE = 2:1
105° SKEW
STAGE I OR II

NORTH CAROLINA PROFESSIONAL SEAL 17230 ENGINEER WAEL S. ARAFAT

DocuSigned by: Wael Arafat
41DC12A32AB406...
10/29/2015

REVISIONS						SHEET NO.
NO.	BY:	DATE:	NO.	BY:	DATE:	C-11
1			3			TOTAL SHEETS
2			4			13

ASSEMBLED BY :	V.X. NGUYEN	DATE :	7-13-15
CHECKED BY :	H.T. BARBOUR	DATE :	8-3-15
DRAWN BY :	CCJ		12/99
CHECKED BY :	RWW		03/00

STD. NO. CW7506

DocuSign Envelope ID: A87BB1CC-193C-453E-B835-A1C31CA4A2E0

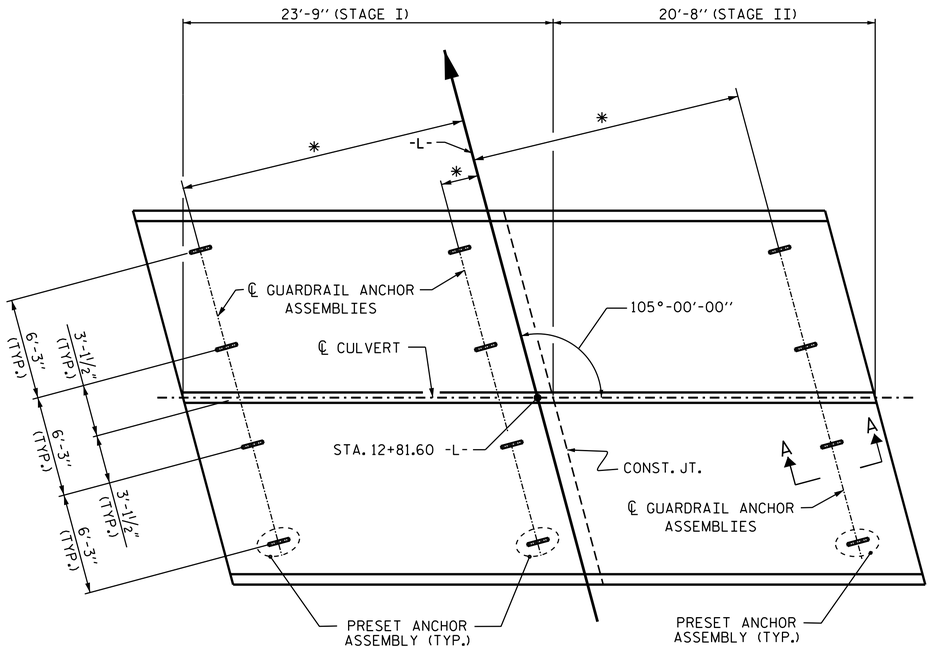

PLAN

SHOWING : GUARDRAIL ANCHOR ASSEMBLY SPACING.
* THESE DIMENSION TO BE FURNISHED BY THE ENGINEER

NOTES

THE GUARDRAIL ANCHOR ASSEMBLY FOR CULVERTS SHALL CONSIST OF THE FOLLOWING COMPONENTS :

A. FERRULES SHALL BE MADE FROM STEEL MEETING THE REQUIREMENTS OF AASHTO M169, GRADE 12L14 AND SHALL HAVE A MINIMUM LENGTH OF THREADS OF 2½".

B. 4 - 1'' Ø X 2 ¼'' BOLTS WITH WASHERS, BOLTS SHALL CONFORM TO THE REQUIREMENTS OF ASTM A307. BOLTS AND WASHERS SHALL BE GALVANIZED. (AT THE CONTRACTOR'S OPTION, STAINLESS STEEL BOLTS AND WASHERS MAY BE USED AS AN ALTERNATE FOR THE 1'' Ø X 2¼'' GALVANIZED BOLTS AND WASHERS. THEY SHALL CONFORM TO OR EXCEED THE MECHANICAL REQUIREMENTS OF ASTM A307. THE USE OF THIS ALTERNATE SHALL BE APPROVED BY THE ENGINEER.)

C. WIRE STRUTS SHOWN IN THE GUARDRAIL ANCHOR ASSEMBLY FOR CULVERTS DETAIL ARE MINIMUM ALLOWABLE SIZE AND SHALL HAVE A MINIMUM TENSILE STRENGTH OF 100,000 P.S.I. AS AN OPTION, A 7/16'' Ø WIRE STRUT WITH A MINIMUM TENSILE STRENGTH OF 90,000 PSI IS ACCEPTABLE.

GUARDRAIL ANCHOR ASSEMBLY WITH BOLTS SHALL BE ASSEMBLED IN THE SHOP. BOLT THREADS MAY BE RECUT AS NECESSARY TO INSURE FIT.

THE COST OF THE GUARDRAIL ANCHOR ASSEMBLY FOR CULVERTS COMPLETE IN PLACE, SHALL BE INCLUDED IN THE UNIT CONTRACT PRICE BID FOR CLASS "A" CONCRETE.

FERRULES TO BE PLUGGED DURING POURING OF SLAB AS RECOMMENDED BY THE MANUFACTURER.

AT THE CONTRACTOR'S OPTION, FERRULES WITH OPEN OR CLOSED ENDS MAY BE USED.

PAYMENT FOR GUARDRAIL, POSTS, AND POST BASE PLATES IS INCLUDED IN ROADWAY PAY ITEMS.

SLAB REINFORCING STEEL MAY BE SHIFTED AS NECESSARY TO CLEAR GUARDRAIL ANCHOR ASSEMBLY. CARE SHOULD BE TAKEN TO KEEP THE SHIFTING OF REINFORCING STEEL TO A MINIMUM.

THE CONTRACTOR MAY USE ADHESIVELY ANCHORED ANCHOR BOLTS IN PLACE OF GUARDRAIL ANCHOR ASSEMBLY. LEVEL TWO FIELD TESTING IS REQUIRED, AND THE YIELD LOAD OF THE 1" Ø BOLT IS 21.8 KIPS. FOR ADHESIVELY ANCHORED ANCHOR BOLTS OR DOWELS, SEE STANDARD SPECIFICATIONS.

TEMPORARY GUARDRAIL IS REQUIRED FOR TRAFFIC ON STAGE I CULVERT. GUARDRAIL ANCHOR ASSEMBLIES SHALL BE USED FOR TEMPORARY ANCHORED GUARDRAIL. AFTER THE REMOVAL OF THE TEMPORARY GUARDRAIL, THE FERRULES SHALL BE FILLED WITH GROUT. ADHESIVELY ANCHORED ANCHOR BOLTS SHALL NOT BE USED FOR THE TEMPORARY GUARDRAIL.

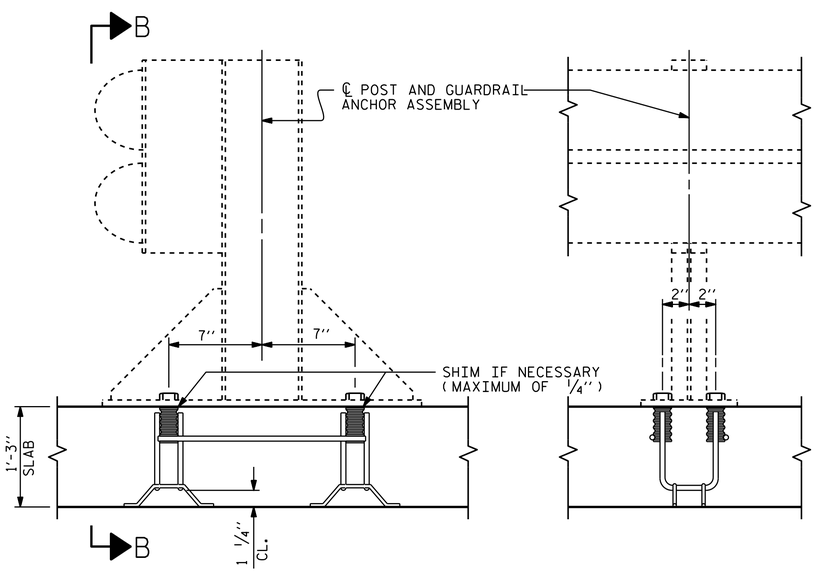

SECTION A-A

SECTION B-B

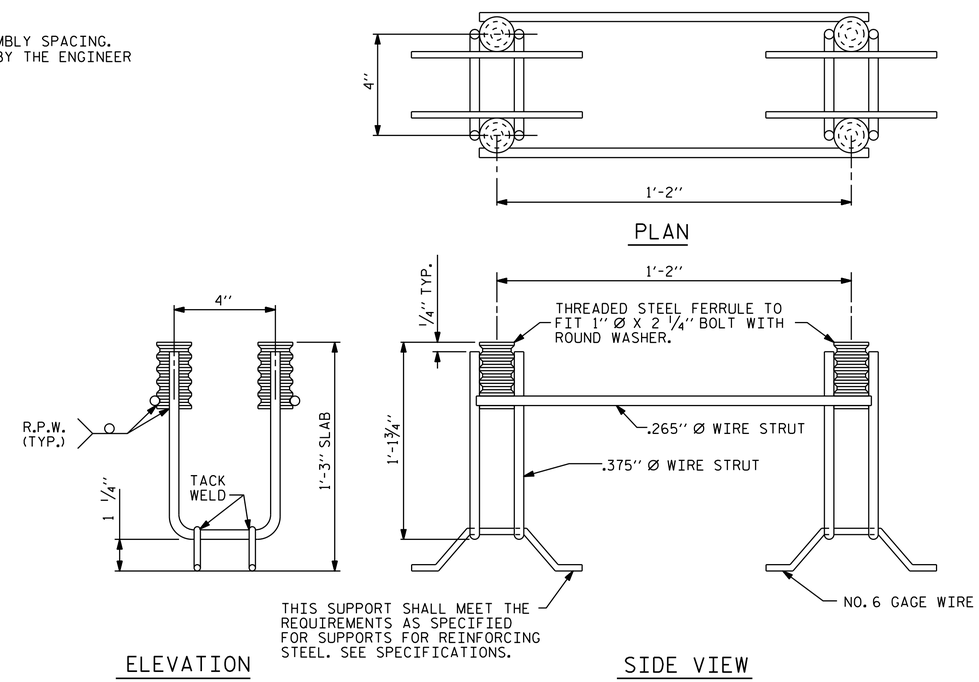

GUARDRAIL ANCHOR ASSEMBLY FOR CULVERTS

PROJECT NO. B-4792
POLK COUNTY
STATION: 12+81.60 -L-

SHEET 12 OF 13

STATE OF NORTH CAROLINA
DEPARTMENT OF TRANSPORTATION
RALEIGH

STANDARD

ANCHORAGE DETAILS FOR GUARDRAIL ANCHOR ASSEMBLY FOR CULVERTS

NORTH CAROLINA PROFESSIONAL SEAL 17230 ENGINEER WAEL S. ARAFAT

DocuSigned by: Wael Arafat 10/29/2015

ASSEMBLED BY :	V.X. NGUYEN	DATE :	7-13-15
CHECKED BY :	H.T. BARBOUR	DATE :	8-3-15
DRAWN BY : FCJ	6/88	REV. 5/7/03	RWW/JTE
CHECKED BY : ARB	6/88	REV. 5/1/06R	KMM/GM
		REV. 10/1/11	MAA/GM

REVISIONS								SHEET NO.
NO.	BY:	DATE:	NO.	BY:	DATE:			C-12
1			3					TOTAL SHEETS
2			4					13

STD. NO. GRA1

28-OCT-2015 16:26
V:\Structures\Plans\FINAL PLANS\B-4792_CU.dgn
warafat

DocuSign Envelope ID: A87BB1CC-193C-453E-B835-A1C31CA4A2E0

LOAD AND RESISTANCE FACTOR RATING (LRFR) SUMMARY FOR REINFORCED CONCRETE BOX CULVERTS

LEVEL		VEHICLE	WEIGHT (W) (TONS)	CONTROLLING LOAD RATING (#)	MINIMUM RATING FACTORS (RF)	TONS = W × RF	STRENGTH I LIMIT STATE									COMMENT NUMBER
							LIVE-LOAD FACTORS $\gamma_{(LL)}$	MOMENT				SHEAR				
								RATING FACTOR	BOX NO.	ELEMENT TYPE	DISTANCE FROM LEFT END OF ELEMENT (ft)	RATING FACTOR	BOX NO.	ELEMENT TYPE	DISTANCE FROM LEFT END OF ELEMENT (ft)	
DESIGN LOAD RATING		HL-93 (INVENTORY)	N/A	1	1.04	--	1.75	1.42	1	TOP SLAB	4.67	1.04	1	TOP SLAB	10.38	
		HL-93 (OPERATING)	N/A		1.34	--	1.35	1.85	1	TOP SLAB	4.67	1.34	1	TOP SLAB	10.38	
		HS-20 (INVENTORY)	36.000	2	1.11	39.92	1.75	1.56	1	TOP SLAB	4.96	1.11	1	BOTTOM SLAB	10.70	
		HS-20 (OPERATING)	36.000		1.44	51.74	1.35	2.02	1	TOP SLAB	4.96	1.44	1	BOTTOM SLAB	10.70	
LEGAL LOAD RATING	SINGLE VEHICLE (SV)	SNSH	13.500		2.35	31.71	1.40	2.85	1	TOP SLAB	4.96	2.35	1	TOP SLAB	10.38	
		SNGARBS2	20.000		2.20	43.92	1.40	2.66	1	TOP SLAB	4.96	2.20	1	TOP SLAB	10.38	
		SNAGRIS2	22.000		2.02	44.47	1.40	2.84	1	TOP SLAB	4.96	2.02	1	BOTTOM SLAB	10.70	
		SNCOTTS3	27.250		1.30	35.34	1.40	1.78	1	TOP SLAB	4.67	1.30	1	TOP SLAB	10.38	
		SNAGGRS4	34.925		1.27	44.53	1.40	1.89	1	BOTTOM SLAB	10.79	1.27	1	BOTTOM SLAB	10.70	
		SNS5A	35.550		1.27	45.32	1.40	1.87	1	BOTTOM SLAB	10.79	1.27	1	BOTTOM SLAB	10.70	
		SNS6A	39.950		1.26	50.23	1.40	1.89	1	BOTTOM SLAB	10.79	1.26	1	BOTTOM SLAB	10.70	
		SNS7B	42.000		1.18	49.41	1.40	1.82	1	BOTTOM SLAB	10.79	1.18	1	BOTTOM SLAB	10.70	
	TRUCK TRACTOR SEMI-TRAILER (TTST)	TNAGRIT3	33.000		1.36	44.89	1.40	2.08	1	BOTTOM SLAB	10.79	1.36	1	BOTTOM SLAB	10.70	
		TNT4A	33.075		1.49	49.20	1.40	2.12	1	TOP SLAB	4.67	1.49	1	BOTTOM SLAB	10.70	
		TNT6A	41.600		1.25	52.13	1.40	2.02	1	BOTTOM SLAB	10.79	1.25	1	BOTTOM SLAB	10.70	
		TNT7A	42.000		1.21	50.72	1.40	1.87	1	BOTTOM SLAB	10.79	1.21	1	BOTTOM SLAB	10.70	
		TNT7B	42.000		1.31	55.08	1.40	1.93	1	BOTTOM SLAB	10.79	1.31	1	BOTTOM SLAB	10.70	
		TNAGRIT4	43.000		1.18	50.75	1.40	1.78	1	BOTTOM SLAB	10.79	1.18	1	BOTTOM SLAB	10.70	
		TNAGT5A	45.000		1.16	52.11	1.40	1.75	1	BOTTOM SLAB	10.79	1.16	1	BOTTOM SLAB	10.70	
		TNAGT5B	45.000	3	1.06	47.86	1.40	1.63	1	BOTTOM SLAB	10.79	1.06	1	BOTTOM SLAB	10.70	

LOAD FACTORS:

DESIGN LOAD RATING FACTORS

LOAD TYPE	MAX FACTOR	MIN FACTOR
DC	1.25	0.90
DW	1.50	0.65
EV	1.30	0.90
EH	1.35	0.90
ES	1.35	0.90
LS	1.75	--
WA	1.00	--

(#) CONTROLLING LOAD RATING

(1) DESIGN LOAD RATING (HL-93)

(2) DESIGN LOAD RATING (HS-20)

(3) LEGAL LOAD RATING **

** SEE CHART FOR VEHICLE TYPE

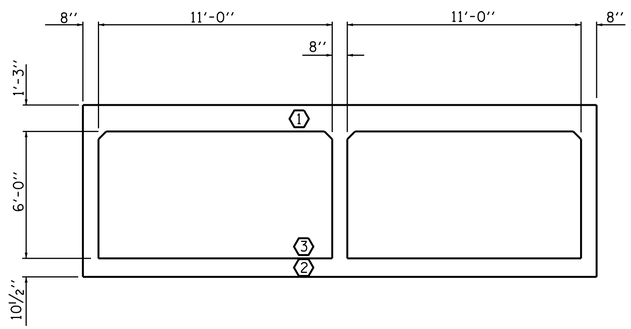

LRFR SUMMARY

PROJECT NO. B-4792

POLK COUNTY

STATION: 12+81.60 -L-

SHEET 13 OF 13

STATE OF NORTH CAROLINA
DEPARTMENT OF TRANSPORTATION
RALEIGH
STANDARD

LRFR SUMMARY FOR REINFORCED CONCRETE BOX CULVERTS
(NON-INTERSTATE TRAFFIC)

NORTH CAROLINA PROFESSIONAL SEAL 17230 ENGINEER WAEL S. ARAFAT

DocuSigned by: Wael Arafat
A1B0C1C02AB406...
10/29/2015

REVISIONS						SHEET NO.
NO.	BY:	DATE:	NO.	BY:	DATE:	S-13
1			3			TOTAL SHEETS
2			4			13

STD. NO. LRFR5

ASSEMBLED BY : V.X. NGUYEN DATE : 9-15-15
CHECKED BY : H.T. BARBOUR DATE : 9-17-15
DRAWN BY : WMC 7/11
CHECKED BY : GM 7/11
REV. 10/1/11 MAA/GM

28-OCT-2015 16:28
V:\Structures\Plans\FINAL PLANS\B-4792_CU.dgn
warafat

DocuSign Envelope ID: A87BB1CC-193C-453E-B835-A1C31CA4A2E0

STANDARD NOTES

DESIGN DATA:

SPECIFICATIONS	A.A.S.H.T.O. (CURRENT)
LIVE LOAD	SEE PLANS
IMPACT ALLOWANCE	SEE A.A.S.H.T.O.
STRESS IN EXTREME FIBER OF	
STRUCTURAL STEEL - AASHTO M270 GRADE 36	20,000 LBS. PER SQ. IN.
- AASHTO M270 GRADE 50W	27,000 LBS. PER SQ. IN.
- AASHTO M270 GRADE 50	27,000 LBS. PER SQ. IN.
REINFORCING STEEL IN TENSION	
GRADE 60	24,000 LBS. PER SQ. IN.
CONCRETE IN COMPRESSION	1,200 LBS. PER SQ. IN.
CONCRETE IN SHEAR	SEE A.A.S.H.T.O.
STRUCTURAL TIMBER - TREATED OR	
UNTREATED - EXTREME FIBER STRESS	1,800 LBS. PER SQ. IN.
COMPRESSION PERPENDICULAR TO GRAIN OF TIMBER	375 LBS. PER SQ. IN.
EQUIVALENT FLUID PRESSURE OF EARTH	30 LBS. PER CU. FT. (MINIMUM)

MATERIAL AND WORKMANSHIP:

EXCEPT AS MAY OTHERWISE BE SPECIFIED ON PLANS OR IN THE SPECIAL PROVISIONS, ALL MATERIAL AND WORKMANSHIP SHALL BE IN ACCORDANCE WITH THE 2012 "STANDARD SPECIFICATIONS FOR ROADS AND STRUCTURES" OF THE N. C. DEPARTMENT OF TRANSPORTATION.

STEEL SHEET PILING FOR PERMANENT OR TEMPORARY APPLICATIONS SHALL BE HOT ROLLED.

CONCRETE:

UNLESS OTHERWISE REQUIRED ON PLANS, CLASS A CONCRETE SHALL BE USED FOR ALL PORTIONS OF ALL STRUCTURES WITH THE EXCEPTION THAT: CLASS AA CONCRETE SHALL BE USED IN BRIDGE SUPERSTRUCTURES, ABUTMENT BACKWALLS, AND APPROACH SLABS; AND CLASS B CONCRETE SHALL BE USED FOR SLOPE PROTECTION AND RIP RAP.

CONCRETE CHAMFERS:

UNLESS OTHERWISE NOTED ON THE PLANS, ALL EXPOSED CORNERS ON STRUCTURES SHALL BE CHAMFERED 3/4" WITH THE FOLLOWING EXCEPTIONS: TOP CORNERS OF CURBS MAY BE ROUNDED TO 1-1/2" RADIUS WHICH IS BUILT INTO CURB FORMS; CORNERS OF TRANSVERSE FLOOR EXPANSION JOINTS SHALL BE ROUNDED WITH A 1/4" FINISHING TOOL UNLESS OTHERWISE REQUIRED ON PLANS; AND CORNERS OF EXPANSION JOINTS IN THE ROADWAY FACES AND TOPS OF CURBS AND SIDEWALKS SHALL BE ROUNDED TO A 1/4" RADIUS WITH A FINISHING STONE OR TOOL UNLESS OTHERWISE REQUIRED ON PLANS.

DOWELS:

DOWELS WHEN INDICATED ON PLANS AS FOR CULVERT EXTENSIONS, SHALL BE EMBEDDED AT LEAST 12" INTO THE OLD CONCRETE AND GROUTED INTO PLACE WITH 1:2 CEMENT MORTAR.

ALLOWANCE FOR DEAD LOAD DEFLECTION, SETTLEMENT, ETC. IN CASTING SUPERSTRUCTURES:

BRIDGES SHALL BE BUILT ON THE GRADE OR VERTICAL CURVE SHOWN ON PLANS. SLABS, CURBS AND PARAPETS SHALL CONFORM TO THE GRADE OR CURVE.

ALL DIMENSIONS WHICH ARE GIVEN IN SECTION AND ARE AFFECTED BY DEAD LOAD DEFLECTIONS ARE DIMENSIONS AT CENTER LINE OF BEARING UNLESS OTHERWISE NOTED ON PLANS. IN SETTING FORMS FOR STEEL BEAM BRIDGES AND PRESTRESSED CONCRETE GIRDER BRIDGES, ADJUSTMENTS SHALL BE MADE DUE TO THE DEAD LOAD DEFLECTIONS FOR THE ELEVATIONS SHOWN. WHERE BLOCKS ARE SHOWN OVER BEAMS FOR BUILDING UP TO THE SLAB, THE VERTICAL DIMENSIONS OF THE BLOCKS SHALL BE ADJUSTED BETWEEN BEARINGS TO COMPENSATE FOR DEAD LOAD DEFLECTIONS, VERTICAL CURVE ORDINATE, AND ACTUAL BEAM CAMBER. WHERE BOTTOM OF SLAB IS IN LINE WITH BOTTOM OF TOP FLANGES, DEPTH OF SLAB BETWEEN BEARINGS SHALL BE ADJUSTED TO COMPENSATE FOR DEAD LOAD DEFLECTION, VERTICAL CURVE ORDINATE, AND ACTUAL BEAM CAMBER.

IN SETTING FALSEWORK AND FORMS FOR REINFORCED CONCRETE SPANS, AN ALLOWANCE SHALL BE MADE FOR DEAD LOAD DEFLECTIONS, SETTLEMENT OF FALSEWORK, AND PERMANENT CAMBER WHICH SHALL BE PROVIDED FOR IN ADDITION TO THE ELEVATIONS SHOWN. AFTER REMOVAL OF THE FALSEWORK, THE FINISHED STRUCTURES SHALL CONFORM TO THE PROFILE AND ELEVATIONS SHOWN ON THE PLANS AND CONSTRUCTION ELEVATIONS FURNISHED BY THE ENGINEER.

DETAILED DRAWINGS FOR FALSEWORK OR FORMS FOR BRIDGE SUPERSTRUCTURE AND ANY STRUCTURE OR PARTS OF A STRUCTURE AS NOTED ON THE PLANS SHALL BE SUBMITTED TO THE ENGINEER FOR APPROVAL BEFORE CONSTRUCTION OF THE FALSEWORK OR FORMS IS STARTED.

REINFORCING STEEL:

ALL REINFORCING STEEL SHALL BE DEFORMED. DIMENSIONS RELATIVE TO PLACEMENT OF REINFORCING ARE TO CENTERS OF BARS UNLESS OTHERWISE INDICATED IN THE PLANS. DIMENSIONS ON BAR DETAILS ARE TO CENTERS OF BARS OR ARE OUT TO OUT AS INDICATED ON PLANS.

WIRE BAR SUPPORTS SHALL BE PROVIDED FOR REINFORCING STEEL WHERE INDICATED ON THE PLANS. WHEN BAR SUPPORT PIECES ARE PLACED IN CONTINUOUS LINES, THEY SHALL BE SO PLACED THAT THE ENDS OF THE SUPPORTING WIRES SHALL BE LAPPED TO LOCK LEGS ON ADJOINING PIECES.

STRUCTURAL STEEL:

AT THE CONTRACTOR'S OPTION, HE MAY SUBSTITUTE 7/8" Ø SHEAR STUDS FOR THE 3/4" Ø STUDS SPECIFIED ON THE PLANS. THIS SUBSTITUTION SHALL BE MADE AT THE RATE OF 3 - 7/8" Ø STUDS FOR 4 - 3/4" Ø STUDS, AND STUD SPACING CHANGES SHALL BE MADE AS NECESSARY TO PROVIDE THE SAME EQUIVALENT NUMBER OF 7/8" Ø STUDS ALONG THE BEAM AS SHOWN FOR 3/4" Ø STUDS BASED ON THE RATIO OF 3 - 7/8" Ø STUDS FOR 4 - 3/4" Ø STUDS. STUDS OF THE LENGTH SPECIFIED ON THE PLANS MUST BE PROVIDED. THE MAXIMUM SPACING SHALL BE 2'-0".

EXCEPT AT THE INTERIOR SUPPORTS OF CONTINUOUS BEAMS WHERE THE COVER PLATE IS IN CONTACT WITH BEARING PLATE, THE CONTRACTOR MAY, AT HIS OPTION, SUBSTITUTE FOR THE COVER PLATES DESIGNATED ON THE PLANS COVER PLATES OF THE EQUIVALENT AREA PROVIDED THESE PLATES ARE AT LEAST 5/16" IN THICKNESS AND DO NOT EXCEED A WIDTH EQUAL TO THE FLANGE WIDTH LESS 2" OR A THICKNESS EQUAL TO 2 TIMES THE FLANGE THICKNESS. THE SIZE OF FILLET WELDS SHALL CONFORM TO THE REQUIREMENTS OF THE CURRENT ANSI/AASHTO/AWS "BRIDGE WELDING CODE". ELECTROSLAG WELDING WILL NOT BE PERMITTED.

WITH THE SOLE EXCEPTION OF EDGES AT SURFACES WHICH BEAR ON OTHER SURFACES, ALL SHARP EDGES AND ENDS OF SHAPES AND PLATES SHALL BE SLIGHTLY ROUNDED BY SUITABLE MEANS TO A RADIUS OF APPROXIMATELY 1/16 INCH OR EQUIVALENT FLAT SURFACE AT A SUITABLE ANGLE PRIOR TO PAINTING, GALVANIZING, OR METALLIZING.

HANDRAILS AND POSTS:

METAL STANDARDS AND FACES OF THE CONCRETE END POSTS FOR THE METAL RAIL SHALL BE SET NORMAL TO THE GRADE OF THE CURB, UNLESS OTHERWISE SHOWN ON PLANS. THE METAL RAIL AND TOPS OF CONCRETE POSTS USED WITH THE ALUMINUM RAIL SHALL BE BUILT PARALLEL TO THE GRADE OF THE CURB.

METAL HANDRAILS SHALL BE IN ACCORDANCE WITH THE PLANS. RAILS SHALL BE AS MANUFACTURED FOR BRIDGE RAILING. CASTINGS SHALL BE OF A UNIFORM APPEARANCE. FINS AND OTHER DEFORMATIONS RESULTING FROM CASTING OR OTHERWISE SHALL BE REMOVED IN A MANNER SO THAT A UNIFORM COLORING OF THE COMPLETED CASTING SHALL BE OBTAINED. CASTINGS WITH DISCOLORATIONS OR OF NON-UNIFORM COLORING WILL NOT BE ACCEPTED. CERTIFIED MILL REPORTS ARE REQUIRED FOR METAL RAILS AND POSTS.

SPECIAL NOTES:

GENERALLY, IN CASE OF DISCREPANCY, THIS STANDARD SHEET OF NOTES SHALL GOVERN OVER THE SPECIFICATIONS, BUT THE REMAINDER OF THE PLANS SHALL GOVERN OVER NOTES HEREON, AND SPECIAL PROVISIONS SHALL GOVERN OVER ALL. SEE SPECIFICATIONS ARTICLE 105-4.

ENGLISH

JANUARY, 1990