PROJECT: 17BP.14.R.55

CONTRACT: DN00180

See Sheet 1A For Index of Sheets
See Sheet 1B For Conventional Symbols

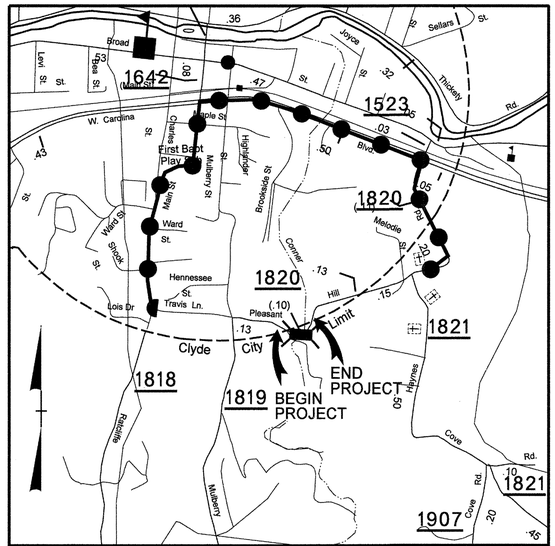

VICINITY MAP NTS

OFF-SITE DETOUR

100% PLANS

STATE OF NORTH CAROLINA
DIVISION OF HIGHWAYS

HAYWOOD COUNTY

STATE	STATE PROJECT REFERENCE NO.	SHEET NO.	TOTAL SHEETS
N.C.	17BP.14.R.55	1	

STATE PROJ. NO.	F.A. PROJ. NO.	DESCRIPTION
17BP.14.R.55		PE
17BP.14.R.55		ROW & UTIL.
17BP.14.R.55		CONSTR.

LOCATION: BRIDGE NO. 321 ON SR 1820 OVER CONNER MILL BRANCH

TYPE OF WORK: GRADING, PAVING, DRAINAGE, SIGNING, AND STRUCTURE

4

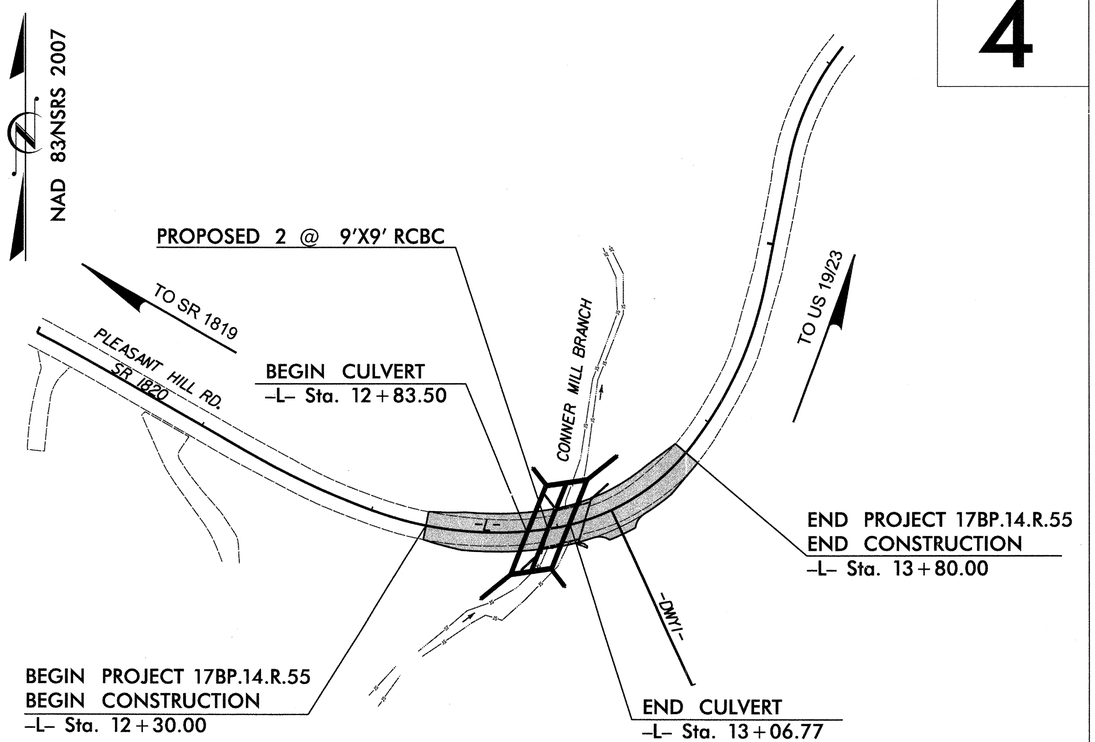

NCDOT CONTACT:
JOSH DEYTON, PE
HIGHWAY DIVISION 14
BRIDGE MANAGER
828-488-0902

GRAPHIC SCALES

20 10 0 20 40
PLANS

20 10 0 20 40
PROFILE (HORIZONTAL)

4 2 0 4 8
PROFILE (VERTICAL)

DESIGN DATA

ADT 2008 = 530
ADT =
DHV = %
D = %
T = % *
V = 35 MPH
* TTST = DUAL
FUNC CLASS = LOCAL
SUBREGIONAL TIER

PROJECT LENGTH

LENGTH ROADWAY PROJECT	=	0.024 MILES
LENGTH STRUCTURES PROJECT	=	0.004 MILES
TOTAL LENGTH PROJECT	=	0.028 MILES

Prepared In the Office of:
THE LOUIS BERGER GROUP, Inc.
1001 Wade Avenue, Suite 400
Raleigh, North Carolina 27605
License No.: F-0840

2012 STANDARD SPECIFICATIONS

RIGHT OF WAY DATE:

LETTING DATE:
MAY 13, 2014

DEAN HATFIELD, PE
PROJECT ENGINEER

WILLIAM TILLITT, PE
PROJECT DESIGN ENGINEER

HYDRAULICS ENGINEER
SIGNATURE: P.E. 4/11/14
NORTH CAROLINA PROFESSIONAL SEAL 032134 ENGINEER WALTER ROBERTS

ROADWAY DESIGN ENGINEER
SIGNATURE: P.E. 4/11/14
NORTH CAROLINA PROFESSIONAL SEAL 16003 ENGINEER DEAN A. HATFIELD

DIVISION OF HIGHWAYS
STATE OF NORTH CAROLINA
STATE OF NORTH CAROLINA DEPARTMENT OF TRANSPORTATION
P.E.
STATE HIGHWAY DESIGN ENGINEER

4/11/2014 10:02:59 AM
G:\DR Projects\DR1100 - NCDOT Group W\430321\Roadway\Proj\430321_RDY_00_TSH.dgn
G:\CADD\Plot\DR1100\1100_rdy.tbl

PROJECT REFERENCE NO.	SHEET NO.
I7BPJ4.R.55	1A

ROADWAY DESIGN ENGINEER

NORTH CAROLINA PROFESSIONAL SEAL 16008 ENGINEER DAVID L. HAYES

REGISTERED ENGINEER
4/11/2014

STATE OF NORTH CAROLINA
DIVISION OF HIGHWAYS

INDEX OF SHEETS

INDEX OF SHEETS

SHEET NUMBER	SHEET
1	TITLE SHEET
1-A	INDEX OF SHEETS, GENERAL NOTES, AND LIST OF STANDARD DRAWINGS
1-B	CONVENTIONAL SYMBOLS
1-C	SURVEY CONTROL
2	PAVEMENT SCHEDULE, TYPICAL SECTIONS, AND WEDGING DETAILS
3	SUMMARY OF QUANTITIES
3A	SUMMARIES OF EARTHWORK, GUARDRAIL & DRAINAGE
4	PLAN SHEET
5	PROFILE SHEET
TMP-1 THRU TMP-2	TRAFFIC CONTROL PLANS
PMP-1 THRU PMP-2	PAVEMENT MARKING PLANS
EC-1 THRU EC-5	EROSION CONTROL PLANS
UC-1 THRU UC-3	UTLITIES CONSTRUCTION PLANS
X-1 THRU X-5	CROSS-SECTIONS
C-1 THRU C-6	CULVERT PLANS

GENERAL NOTES

GENERAL NOTES: 2012 SPECIFICATIONS
EFFECTIVE: 01-17-12
REVISED: 11/01/11

GRADING AND SURFACING OR RESURFACING AND WIDENING:

THE GRADE LINES SHOWN DENOTE THE FINISHED ELEVATION OF THE PROPOSED SURFACING AT GRADE POINTS SHOWN ON THE TYPICAL SECTIONS. WHERE NO GRADE LINES ARE SHOWN, THE PROFILES SHOWN DENOTE THE TOP ELEVATION OF THE EXISTING PAVEMENT ALONG THE CENTER LINE OF SURVEY ON WHICH THE PROPOSED RESURFACING WILL BE PLACED. GRADE LINES MAY BE ADJUSTED BY THE ENGINEER IN ORDER TO SECURE A PROPER TIE-IN.

CLEARING:

CLEARING ON THIS PROJECT SHALL BE PERFORMED TO THE LIMITS ESTABLISHED BY METHOD II.

SUPERELEVATION:

ALL CURVES ON THIS PROJECT SHALL BE SUPERELEVATED IN ACCORDANCE WITH STD. NO. 225.04 USING THE RATE OF SUPERELEVATION AND RUNOFF SHOWN ON THE PLANS. SUPERELEVATION IS TO BE REVOLVED ABOUT THE GRADE POINTS SHOWN ON THE TYPICAL SECTIONS.

SHOULDER CONSTRUCTION:

ASPHALT, EARTH, AND CONCRETE SHOULDER CONSTRUCTION ON THE HIGH SIDE OF SUPERELEVATED CURVES SHALL BE IN ACCORDANCE WITH STD. NO. 560.01.

SIDE ROADS:

THE CONTRACTOR WILL BE REQUIRED TO DO ALL NECESSARY WORK TO PROVIDE SUITABLE CONNECTIONS WITH ALL ROADS, STREETS, AND DRIVES ENTERING THIS PROJECT. THIS WORK WILL BE PAID FOR AT THE CONTRACT UNIT PRICE FOR THE PARTICULAR ITEMS INVOLVED.

GUARDRAIL:

THE GUARDRAIL LOCATIONS SHOWN ON THE PLANS MAY BE ADJUSTED DURING CONSTRUCTION AS DIRECTED BY THE ENGINEER. THE CONTRACTOR SHOULD CONSULT WITH THE ENGINEER PRIOR TO ORDERING GUARDRAIL MATERIAL.

TEMPORARY SHORING:

SHORING REQUIRED FOR THE MAINTENANCE OF TRAFFIC WILL BE PAID FOR AS "EXTRA WORK" IN ACCORDANCE WITH SECTION 104-7.

UTILITIES:

UTILITY OWNERS ON THIS PROJECT ARE

AT&T, PROGRESS ENERGY, & TOWN OF ~~WAYNESVILLE~~ CLYDE

ANY RELOCATION OF EXISTING UTILITIES WILL BE ACCOMPLISHED BY OTHERS, EXCEPT AS SHOWN ON THE PLANS.

RIGHT-OF-WAY MARKERS:

ALL RIGHT-OF-WAY MARKERS ON THIS PROJECT SHALL BE PLACED BY CONTRACT IN ACCORDANCE WITH SECTION 801 OF THE 2012 NORTH CAROLINA STANDARD SPECIFICATIONS FOR ROADS AND STRUCTURES.

ROADWAY ENGLISH STANDARD DRAWINGS

2012 ROADWAY ENGLISH STANDARD DRAWINGS

The following Roadway Standards as appear in "Roadway Standard Drawings" Highway Design Branch - N. C. Department of Transportation - Raleigh, N. C., Dated January, 2012 are applicable to this project and by reference hereby are considered a part of these plans:

STD.NO.	TITLE
DIVISION 2 - EARTHWORK	
200.02	Method of Clearing - Method II
225.02	Guide for Grading Subgrade - Secondary and Local
225.04	Method of Obtaining Superelevation - Two Lane Pavement
DIVISION 3 - PIPE CULVERTS	
300.01	Method of Pipe Installation
310.10	Driveway Pipe Construction
DIVISION 5 - SUBGRADE, BASES AND SHOULDERS	
560.01	Method of Shoulder Construction - High Side of Superelevated Curve - Method I
DIVISION 8 - INCIDENTALS	
840.52	Precast Manhole - 4', 5' and 6' Diameter
840.54	Manhole Frame and Cover
862.01	Guardrail Placement
862.02	Guardrail Installation
866.04	Barbed Wire Fence with Wood Posts (2 - 7 Strands)
876.01	Rip Rap in Channels
876.02	Guide for Rip Rap at Pipe Outlets
876.04	Drainage Ditches with Class 'B' Rip Rap

4/11/2014 10:03:03 AM
G:\DR Projects\DR1100 - NCDOT Group W\430321\Roadway\Proj\430321_RDY_01_1A.dgn
G:\CADD\Plot\DR1100\1100_rdy.tbl

PROJECT REFERENCE NO.	SHEET NO.
17BPJ4.R.55	1B

Note: Not to Scale

**S.U.E. = Subsurface Utility Engineering*

STATE OF NORTH CAROLINA
DIVISION OF HIGHWAYS

CONVENTIONAL PLAN SHEET SYMBOLS

BOUNDARIES AND PROPERTY:

- State Line
- County Line
- Township Line
- City Line
- Reservation Line
- Property Line
- Existing Iron Pin — EIP
- Property Corner
- Property Monument — PCM
- Parcel/Sequence Number — 123
- Existing Fence Line
- Proposed Woven Wire Fence
- Proposed Chain Link Fence
- Proposed Barbed Wire Fence
- Existing Wetland Boundary — WLB
- Proposed Wetland Boundary — WLB
- Existing Endangered Animal Boundary — EAB
- Existing Endangered Plant Boundary — EPB
- Known Soil Contamination: Area or Site
- Potential Soil Contamination: Area or Site

BUILDINGS AND OTHER CULTURE:

- Gas Pump Vent or U/G Tank Cap
- Sign — S
- Well — W
- Small Mine
- Foundation
- Area Outline
- Cemetery
- Building
- School
- Church
- Dam

HYDROLOGY:

- Stream or Body of Water
- Hydro, Pool or Reservoir
- Jurisdictional Stream — JS
- Buffer Zone 1 — BZ 1
- Buffer Zone 2 — BZ 2
- Flow Arrow
- Disappearing Stream
- Spring
- Wetland
- Proposed Lateral, Tail, Head Ditch — FLOW
- False Sump

RAILROADS:

- Standard Gauge — CSX TRANSPORTATION
- RR Signal Milepost — MILEPOST 35
- Switch — SWITCH
- RR Abandoned
- RR Dismantled

RIGHT OF WAY:

- Baseline Control Point
- Existing Right of Way Marker
- Existing Right of Way Line
- Proposed Right of Way Line — RW
- Proposed Right of Way Line with Iron Pin and Cap Marker — RW
- Proposed Right of Way Line with Concrete or Granite Marker — RW
- Existing Control of Access — CA
- Proposed Control of Access — CA
- Existing Easement Line — E
- Proposed Temporary Construction Easement — E
- Proposed Temporary Drainage Easement — TDE
- Proposed Permanent Drainage Easement — PDE
- Proposed Permanent Drainage / Utility Easement — DUE
- Proposed Permanent Utility Easement — PUE
- Proposed Temporary Utility Easement — TUE
- Proposed Aerial Utility Easement — AUE
- Proposed Permanent Easement with Iron Pin and Cap Marker

ROADS AND RELATED FEATURES:

- Existing Edge of Pavement
- Existing Curb
- Proposed Slope Stakes Cut — C
- Proposed Slope Stakes Fill — F
- Proposed Curb Ramp — CR
- Existing Metal Guardrail
- Proposed Guardrail
- Existing Cable Guiderail
- Proposed Cable Guiderail
- Equality Symbol
- Pavement Removal

VEGETATION:

- Single Tree
- Single Shrub
- Hedge
- Woods Line
- Orchard
- Vineyard — Vineyard

EXISTING STRUCTURES:

MAJOR:

- Bridge, Tunnel or Box Culvert — CONC
- Bridge Wing Wall, Head Wall and End Wall — CONC WW

MINOR:

- Head and End Wall — CONC HW
- Pipe Culvert
- Footbridge
- Drainage Box: Catch Basin, DI or JB — CB
- Paved Ditch Gutter
- Storm Sewer Manhole — S
- Storm Sewer — S

UTILITIES:

POWER:

- Existing Power Pole
- Proposed Power Pole
- Existing Joint Use Pole
- Proposed Joint Use Pole
- Power Manhole — P
- Power Line Tower
- Power Transformer
- U/G Power Cable Hand Hole
- H-Frame Pole
- Recorded U/G Power Line — P
- Designated U/G Power Line (S.U.E.*) — P

TELEPHONE:

- Existing Telephone Pole
- Proposed Telephone Pole
- Telephone Manhole — T
- Telephone Booth
- Telephone Pedestal — T
- Telephone Cell Tower
- U/G Telephone Cable Hand Hole — HH
- Recorded U/G Telephone Cable — T
- Designated U/G Telephone Cable (S.U.E.*) — T
- Recorded U/G Telephone Conduit — TC
- Designated U/G Telephone Conduit (S.U.E.*) — TC
- Recorded U/G Fiber Optics Cable — T FO
- Designated U/G Fiber Optics Cable (S.U.E.*) — T FO

WATER:

- Water Manhole — W
- Water Meter
- Water Valve
- Water Hydrant
- Recorded U/G Water Line — W
- Designated U/G Water Line (S.U.E.*) — W
- Above Ground Water Line — A/G Water

TV:

- TV Satellite Dish
- TV Pedestal — C
- TV Tower
- U/G TV Cable Hand Hole — HH
- Recorded U/G TV Cable — TV
- Designated U/G TV Cable (S.U.E.*) — TV
- Recorded U/G Fiber Optic Cable — TV FO
- Designated U/G Fiber Optic Cable (S.U.E.*) — TV FO

GAS:

- Gas Valve
- Gas Meter
- Recorded U/G Gas Line — G
- Designated U/G Gas Line (S.U.E.*) — G
- Above Ground Gas Line — A/G Gas

SANITARY SEWER:

- Sanitary Sewer Manhole
- Sanitary Sewer Cleanout
- U/G Sanitary Sewer Line — SS
- Above Ground Sanitary Sewer — A/G Sanitary Sewer
- Recorded SS Forced Main Line — FSS
- Designated SS Forced Main Line (S.U.E.*) — FSS

MISCELLANEOUS:

- Utility Pole
- Utility Pole with Base
- Utility Located Object
- Utility Traffic Signal Box — S
- Utility Unknown U/G Line — ?UTL
- U/G Tank; Water, Gas, Oil
- Underground Storage Tank, Approx. Loc. — UST
- A/G Tank; Water, Gas, Oil
- Geoenvironmental Boring
- U/G Test Hole (S.U.E.*)
- Abandoned According to Utility Records — AATUR
- End of Information — E.O.I.

04/16/11
4/11/2014 10:03:06 AM
G:\OR Projects\OR1100 - NCDOT Group W\430321\Roadway\Proj\430321_RDY_01_1B.dgn
G:\CADD\Plot\OR1100\1100_rdy.tbl

PROJECT REFERENCE NO.	SHEET NO.
17BP.14.R.55	1C
Location and Surveys	

SURVEY CONTROL SHEET 43-0321
-FINAL-

BL

POINT	DESC.	NORTH	EAST	ELEVATION	L STATION	OFFSET
1	BL-1	669474.1189	837482.1259	2579.02	OUTSIDE PROJECT LIMITS	
2	BL-2	669366.9010	837755.2870	2554.76	12+94.99	10.09 LT
3	BL-3	669550.8730	837874.6309	2561.85	15+43.55	9.80 LT

****
BM1 ELEVATION = 2549.04
N 669408 E 837785
L STATION 13+49.00 38 LEFT
NAIL IN BASE 24" WALNUT
****

-FINAL- PDE MARKER IRON PIN AND CAP-E

ALIGN	STATION	OFFSET	NORTH	EAST
L	12+80.00	-30.00	669385.2990	837739.8836
L	13+20.00	-60.00	669419.3024	837760.1138
L	13+70.00	-45.00	669421.6570	837791.0471
L	13+65.00	-30.00	669408.4514	837798.9239
L	13+10.00	30.00	669331.0419	837779.3809
L	12+98.69	48.58	669309.6286	837768.7028
L	12+68.91	47.52	669307.4483	837731.0599
L	12+44.26	30.00	669326.6180	837702.4809

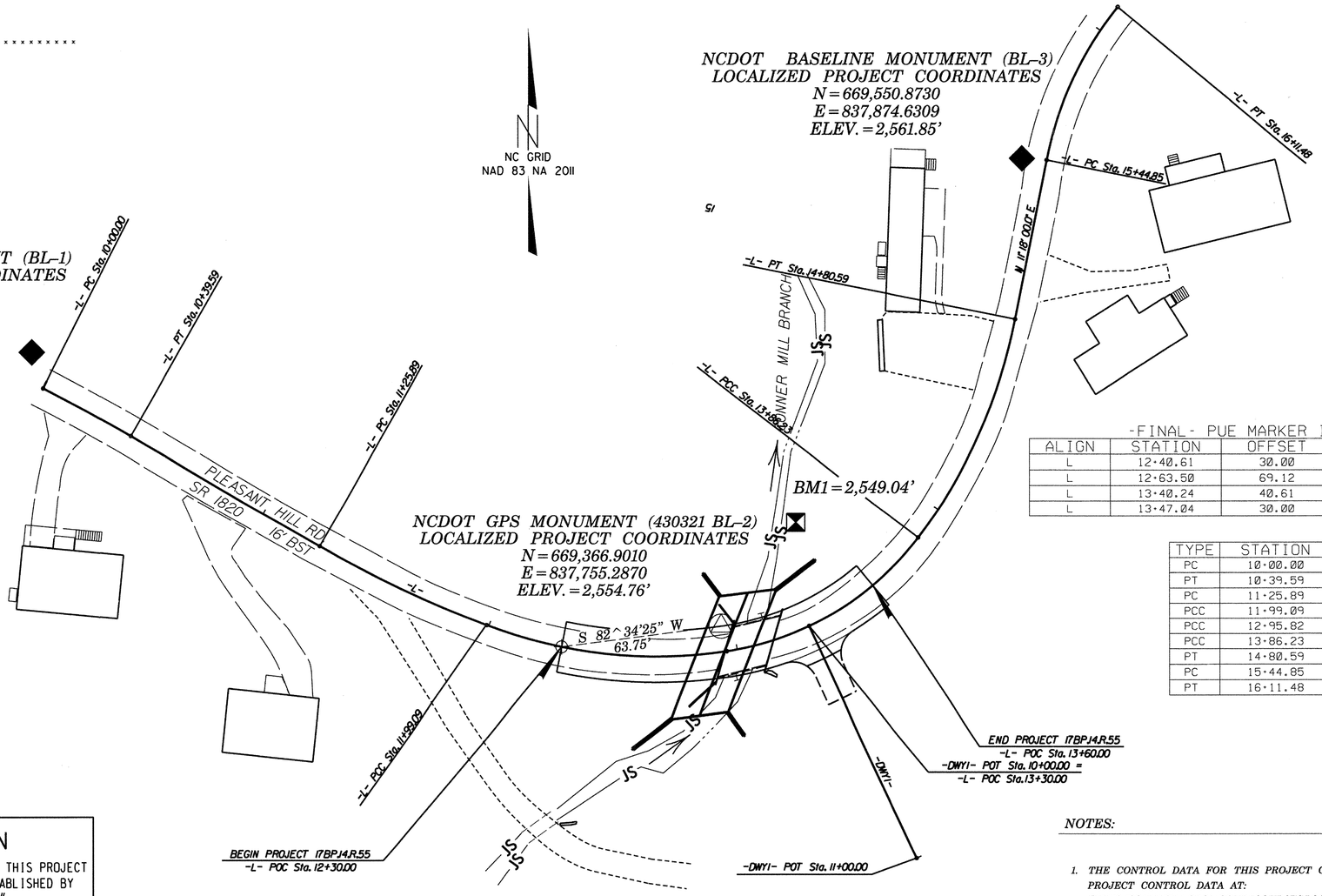

-FINAL- PUE MARKER IRON PIN AND CAP-E

ALIGN	STATION	OFFSET	NORTH	EAST
L	12+40.61	30.00	669327.1744	837698.2923
L	12+63.50	69.12	669285.9004	837723.8238
L	13+40.24	40.61	669336.5660	837819.6515
L	13+47.04	30.00	669350.2415	837821.5613

FINAL -L-

TYPE	STATION	NORTH	EAST
PC	10+00.00	669460.1948	837486.6285
PT	10+39.59	669441.3266	837521.4305
PC	11+25.89	669398.3073	837596.2433
PCC	11+99.09	669367.1351	837662.3877
PCC	12+95.82	669357.0357	837757.5451
PCC	13+86.23	669401.9199	837833.4397
PT	14+80.59	669487.2060	837871.9028
PC	15+44.85	669550.2247	837884.4951
PT	16+11.48	669609.8691	837912.6786

DATUM DESCRIPTION

THE LOCALIZED COORDINATE SYSTEM DEVELOPED FOR THIS PROJECT IS BASED ON THE STATE PLANE COORDINATES ESTABLISHED BY NCDOT FOR MONUMENT "430321 (BL-2)"
WITH NAD 83/NSRS 2007 STATE PLANE GRID COORDINATES OF
NORTHING: 669366.9010(ft) EASTING: 837755.2870(ft)
ELEVATION: 2554.76(ft)
THE AVERAGE COMBINED GRID FACTOR USED ON THIS PROJECT (GROUND TO GRID) IS: 0.999766227
THE N.C. LAMBERT GRID BEARING AND LOCALIZED HORIZONTAL GROUND DISTANCE FROM "430321 (BL-2)" TO -L- STATION 12+30.00 IS
S 82°34'25" W 63.75'
ALL LINEAR DIMENSIONS ARE LOCALIZED HORIZONTAL DISTANCES
VERTICAL DATUM USED IS NAVD 88

GEOID MODEL - G09NC
NOTE: DRAWING NOT TO SCALE

NOTES:

1. THE CONTROL DATA FOR THIS PROJECT CAN BE FOUND ELECTRONICALLY BY SELECTING PROJECT CONTROL DATA AT:
HTTPS://CONNECT.NCDOT.GOV/RESOURCES/LOCATION/

THE FILES TO BE FOUND ARE AS FOLLOWS:
430321_LS_CONTROL.TXT

SITE CALIBRATION INFORMATION HAS NOT BEEN PROVIDED FOR THIS PROJECT. IF FURTHER INFORMATION IS NEEDED, PLEASE CONTACT THE LOCATION AND SURVEYS UNIT.

△ INDICATES GEODETIC CONTROL MONUMENTS USED OR SET FOR HORIZONTAL PROJECT CONTROL BY THE NCDOT LOCATION AND SURVEYS UNIT.
PROJECT CONTROL ESTABLISHED USING GLOBAL POSITIONING SYSTEM.

6/2/99

N.T.S

PROJECT REFERENCE NO.	SHEET NO.
17BP.14.R.55	2
R/W SHEET NO.	

ROADWAY DESIGN ENGINEER	PAVEMENT DESIGN ENGINEER
NORTH CAROLINA PROFESSIONAL SEAL 16002 ENGINEER JOHN D. HATFIELD	NORTH CAROLINA PROFESSIONAL SEAL 16002 ENGINEER JOHN D. HATFIELD
REGISTERED ENGINEER 4/11/2014	REGISTERED ENGINEER 4/11/2014

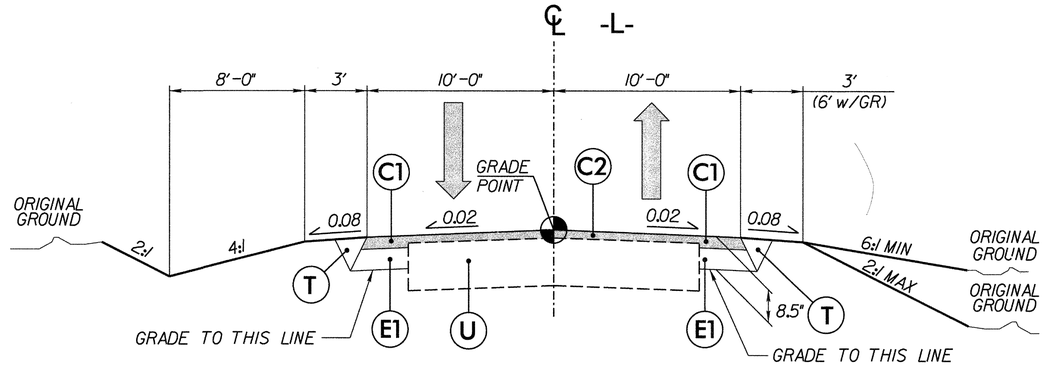

TYPICAL SECTION No. 1

-L- STA 12+30.00 TO -L- STA 13+80.00

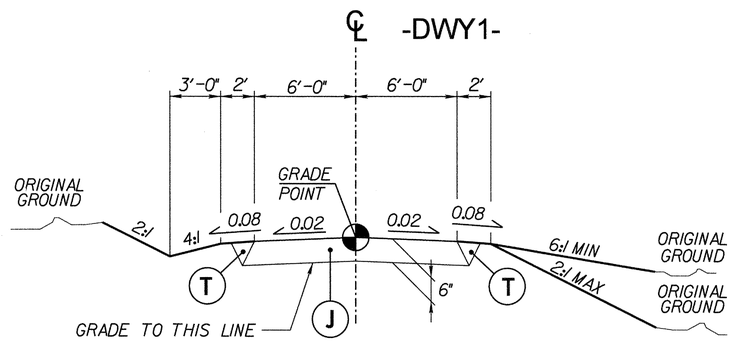

TYPICAL SECTION No. 2

-DWY1- STA 10+14.00 TO -DWY1- STA 10+31.00

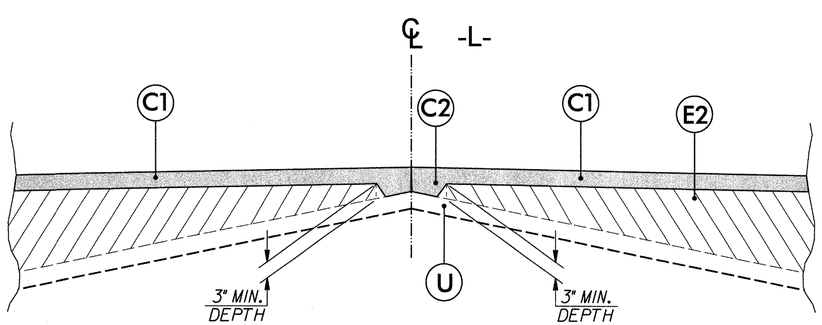

DETAIL SHOWING METHOD OF WEDGING

Note: Pavement edge slopes are 1:1 unless shown otherwise.

PAVEMENT SCHEDULE	
ITEM	DESCRIPTION
C1	Prop. Approx 3.0" Asphalt Concrete Surface Course, Type S9.5B, at an Average Rate of 168 lbs. Per sq. yard in each of two layers.
C2	Prop. Var. Depth Asphalt Concrete Surface Course, Type S9.5B, at an Average Rate of 112 lbs. Per sq. yard Per 1" Depth, to be placed in layers not less than 1.5" or greater than 2" in depth.
E1	Prop. Approx 5.5" Asphalt Concrete Base Course, Type B25.0B, at an Average Rate of 627 lbs. Per sq. yard.
E2	Prop. Var. Depth Asphalt Concrete Base Course, Type B25.0B, at an Average Rate of 114 lbs. Per sq. yard Per 1" Depth, to be placed in layers not less than 4" or greater than 5.5" in depth.
J	6" ABC
T	Earth Material
U	Existing Pavement
W	Var. Depth Asphalt Pavement

REVISIONS

4/11/2014 10:03:14 AM
G:\DR Projects\DR1100 - NCDOT Group W\430321\Roadway\Proj\430321_RDY_02_TYP.dgn
G:\CADD\Plot\DR1100\1100_rdy.tbl

STATE OF NORTH CAROLINA
DIVISION OF HIGHWAYS

SUMMARY OF QUANTITIES

Line Item	Des	Sec No.	Description	Quantity	Unit
1	0000100000-N	800	MOBILIZATION	1	LS
2	0000400000-N	801	CONSTRUCTION SURVEYING	1	LS
3	0043000000-N	226	GRADING	1	LS
-	0001000000-E	200	CLEARING & GRUBBING (0.5 Acres)	1	LS
-	0022000000-E	225	UNCLASSIFIED EXCAVATION	25	CY
-	0106000000-E	230	BORROW EXCAVATION	385	CY
-	1011000000-N	500	FINE GRADING (290 SY)	1	LS
4	0050000000-E	226	SUPPLEMENTARY CLEARING & GRUBBING	0.25	ACR
5	0057000000-E	226	UNDERCUT EXCAVATION	50	CY
6	0134000000-E	240	DRAINAGE DITCH EXCAVATION	35	CY
7	0195000000-E	265	SELECT GRANULAR MATERIAL	50	CY
8	0196000000-E	270	GEOTEXTILE FOR SOIL STABILIZATION	50	SY
9	0318000000-E	300	FOUNDATION CONDITIONING MATERIAL MINOR STRUCTURES	10	TON
10	0320000000-E	300	FOUNDATION CONDITIONING FABRIC	10	SY
11	0582000000-E	310	15" CS PIPE CULVERTS, 0.064" THICK	24	LF
12	0995000000-E	340	PIPE REMOVAL	26	LF
13	1220000000-E	545	INCIDENTAL STONE BASE	50	TON
14	1489000000-E	610	ASPHALT CONC BASE COURSE, TYPE B25.0B	80	TON
15	1519000000-E	610	ASPHALT CONC SURFACE COURSE, TYPE S9.5B	50	TON
16	1575000000-E	620	ASPHALT BINDER FOR PLANT MIX	10	TON
17	3030000000-E	862	STEEL BM GUARDRAIL	175	LF
18	3045000000-E	862	STEEL BM GUARDRAIL, SHOP CURVED	25	LF
19	3150000000-N	862	ADDITIONAL GUARDRAIL POSTS	4	EA
20	3165000000-N	SP	GUARDRAIL ANCHOR UNITS, TYPE 350 TL-2	3	EA
21	3195000000-N	862	GUARDRAIL ANCHOR UNITS, TYPE AT-1	1	EA
22	3569000000-E	867	BARBED WIRE FENCE RESET	100	LF
23	3628000000-E	876	RIP RAP, CLASS I	55	TON
24	3649000000-E	876	RIP RAP, CLASS B	16	TON
25	3656000000-E	876	GEOTEXTILE FOR DRAINAGE	115	SY
26	4400000000-E	1110	WORK ZONE SIGNS (STATIONARY)	505	SF
27	4410000000-E	1110	WORK ZONE SIGNS (BARRICADE MOUNTED)	139	SF
28	4445000000-E	1145	BARRICADES (TYPE III)	96	LF
29	4810000000-E	1205	PAINT PAVEMENT MARKING LINES (4")	1,200	LF
30	5691200000-E	1520	6" SANITARY GRAVITY SEWER	233	LF
31	5775000000-E	1525	4' DIA UTILITY MANHOLE	2	EA
32	5800000000-E	1530	ABANDON 6" UTILITY PIPE	175	LF
33	5828000000-N	1530	REMOVE UTILITY MANHOLE	1	EA
34	5875000000-N	SP	CONCRETE PIERS	2	EA
35	6015000000-E	1615	TEMPORARY MULCHING	0.5	ACR
36	6018000000-E	1620	SEED FOR TEMPORARY SEEDING	50	LB
37	6021000000-E	1620	FERTILIZER FOR TEMPORARY SEEDING	0.25	TON
38	6029000000-E	SP	SAFETY FENCE	100	LF
39	6036000000-E	1631	MATTING FOR EROSION CONTROL	100	SY
40	6070000000-N	1639	SPECIAL STILLING BASIN	2	EA
41	6071010000-E	SP	WATTLE	300	LF
42	6084000000-E	1660	SEEDING & MULCHING	0.5	ACR
43	6090000000-E	1661	SEED FOR REPAIR SEEDING	50	LB
44	6093000000-E	1661	FERTILIZER FOR REPAIR SEEDING	0.25	TON
45	6096000000-E	1662	SEED FOR SUPPLEMENTAL SEEDING	50	LB
46	6108000000-E	1665	FERTILIZER TOPDRESSING	0.25	TON
47	6111000000-E	SP	IMPERVIOUS DIKE	200	LF
48	6117000000-N	SP	RESPONSE FOR EROSION CONTROL	9	EA
			STRUCTURES		
49	8035000000-N	402	REMOVAL OF EXISTING STRUCTURE AT STATION -L- 12+94.85	1	LS
50	8126000000-N	414	CULVERT EXCAVATION, STATION -L- 12+94.85	1	LS
51	8133000000-E	414	FOUNDATION CONDITIONING MATER-IAL, BOX CULVERT	87	TON
52	8196000000-E	420	CLASS A CONCRETE (CULVERT)	155.3	CY
53	8824500000-E	425	REINFORCING STEEL (CULVERT)	23,032	LB
54	8594000000-E	876	RIP RAP, CLASS B	56	TON

REVISIONS

4/11/2014 10:03:17 AM
G:\OR Projects\OR1100 - NCDOT Group W\430321\Roadway\Proj\430321_RDY_03_SQ0.dgn
G:\CADD\Plot\OR1100\1100_rdy.tbl

THE LOUIS BERGER GROUP, Inc.
1001 Wade Avenue, Suite 400
Raleigh, NC 27605-3322

ROADWAY PLANS

STATE OF NORTH CAROLINA
DIVISION OF HIGHWAYS

"N" = DISTANCE FROM EDGE OF LANE TO FACE OF GUARDRAIL.
TOTAL SHOULDER WIDTH = DISTANCE FROM EDGE OF TRAVEL LANE TO SHOULDER BREAK POINT.
FLARE LENGTH = DISTANCE FROM LAST SECTION OF PARALLEL GUARDRAIL TO END OF GUARDRAIL.
W = TOTAL WIDTH OF FLARE FROM BEGINNING OF TAPER TO END OF GUARDRAIL.
G = GATING IMPACT ATTENUATOR TYPE 350
NG = NON-GATING IMPACT ATTENUATOR TYPE 350

GUARDRAIL SUMMARY

SURVEY LINE	BEG. STA.	END STA.	LOCATION	LENGTH			WARRANT POINT		"N" DIST. FROM E.O.L.	TOTAL SHOUL. WIDTH	FLARE LENGTH		W		ANCHORS									IMPACT ATTENUATOR TYPE 350			SINGLE FACED GUARDRAIL	REMOVE EXISTING GUARDRAIL	REMOVE AND STOCKPILE EXISTING GUARDRAIL	REMARKS
				STRAIGHT	SHOP CURVED	DOUBLE FACED	APPROACH END	TRAILING END			APPROACH END	TRAILING END	APPROACH END	TRAILING END	XI MOD	XI	GRAU 350 TL-2	M-350	TYPE-III	CAT-1	VI MOD	B-77	AT-1	EA	G	NG				
L	12+20.00	13+85.00	LT	165	–	–	–	–	3'	6'	–	–	–	–	–	–	2	–	–	–	–	–	–	–	–	–	–	–	–	–
L	12+20.00	13+25.00	RT	105	12.5	–	–	–	3'	6'	–	–	–	–	–	–	1	–	–	–	–	–	1	–	–	–	–	–	–	–
–	–	–	–	–	–	–	–	–	–	–	–	–	–	–	–	–	–	–	–	–	–	–	–	–	–	–	–	–	–	–
–	–	–	–	–	–	–	–	–	–	–	–	–	–	–	–	–	–	–	–	–	–	–	–	–	–	–	–	–	–	–
–	–	–	–	–	–	–	–	–	–	–	–	–	–	–	–	–	–	–	–	–	–	–	–	–	–	–	–			–
–	–	–	–	–	–	–	–	–	–	–	–	–	–	–	–	–	–	–	–	–	–	–	–	–	–	–	–	–	–	–
			SUB-TOTAL	270'											DEDUCTIONS FOR GUARDRAIL ANCHOR UNITS															
	DEDUCTIONS FOR GUARDRAIL ANCHOR UNITS			81.25'											TYPE TL-2			3 @ 25.00' =		75'										
			TOTAL	188.75'											TYPE AT-1			1 @ 6.25' =		6.25'										
			SAY	195'														TOTAL =		81.25'										

SUMMARY OF EARTHWORK (IN CUBIC YARDS)

STATION	STATION	UNCL. EXCAV.	EMBANK. +%	BORROW	WASTE
-L- 12+30.00	13+60.00	19	394	375	–
-DWY1- 10+10.00	10+30.00	11	16	5	–
–	–	–	–	–	–
–	–	–	–	–	–
–	–	–	–	–	–
–	–	–	–	–	–
PROJECT TOTALS:		30	410	380	–
		–	–	–	–
–		–	–	–	–
–		–	–	–	–
SHOULDER MATERIAL		–	–	–	–
WASTE IN LIEU OF BORROW		–	–	–	–
LOSS DUE TO CLEARING & GRUBBING		–5	–	5	–
		–	–	–	–
–		–	–	–	–
GRAND TOTALS:		25	410	385	–
–		–	–	–	–
SAY:		25	–	385	–

CONTINGENCY ITEMS
UNDERCUT EXCAVATION 50 CY
SELECT GRANULAR MATERIAL 50 CY
GEOTEXTILE FOR SOIL STABILIZATION 50 SY
INCIDENTAL STONE BASE 50 TON

NOTE: INVERT ELEVATIONS INDICATED ARE FOR BID PURPOSES ONLY AND SHALL NOT BE USED FOR PROJECT CONSTRUCTION STAKEOUT.
SEE "STANDARDS SPECIFICATIONS FOR ROADS AND STRUCTURES, SECTION 300-5".

LIST OF PIPES, ENDWALLS, ETC. (FOR PIPES 48" & UNDER)

STATION / SIZE / THICKNESS OR GAUGE	LOCATION (LT,RT, OR CL)	STRUCTURE NO. FROM	STRUCTURE NO. TO	TOP ELEVATION	INVERT ELEVATION	INVERT ELEVATION	SLOPE CRITICAL	DRAINAGE PIPE (RCP, CSP, CAAP, HDPE, or PVC) 12"	15"	18"	24"	30"	36"	42"	48"	DO NOT USE RCP	DO NOT USE CSP	DO NOT USE CAAP	DO NOT USE HDPE
DWY1- 10+22	CL	401			2554.17	2552.65													
SHEET TOTALS																			

STATION	C.S. PIPE 12" (.064)	15" (.064)	18" (.064)	24" (.064)	30" (.079)	36" (.079)	42" (.109)	48" (.109)	R.C. PIPE CLASS III 12"	15"	18"	24"	30"	36"	42"	48"	R.C. PIPE CLASS IV 12"	15"	18"	24"	30"	36"	42"	48"
DWY1- 10+22		24																						
SHEET TOTALS		24																						

STATION	** " R.C. PIPE (CLASS V)	***" R.C. PIPE CULVERTS, CONTRACTOR DESIGN	***" R.C. PIPE CULVERTS, CONTRACTOR DESIGN	18" SIDE DRAIN PIPE	ENDWALLS STD. 838.01, STD. 838.11 OR STD. 838.80 (UNLESS NOTED OTHERWISE) CU. YDS. R.C.P.	C.S.P.	QUANTITIES FOR DRAINAGE STRUCTURES * TOTAL L.F. FOR PAY QUANTITY SHALL BE COL. 'A' + (1.3 X COL.'B') PER EACH (0' THRU 5.0')	LIN. *FT. A 5.0' THRU 10.0'	B 10.0' AND ABOVE	C.B. STD. 840.01 OR STD. 840.02	FRAME, GRATES AND HOOD STANDARD 840.03 TYPE OF GRATE E	F	G	CONCRETE TRASITIONAL SECTION DROP INLET	CATCH BASIN	D.I. STD. 840.14 OR STD. 840.15	D.I. FRAME & GRATE STD. 840.16	G.D.I. TYPE "A" STD. 840.17 OR 840.26	G.D.I. TYPE "B" STD. 840.18 OR 840.27	G.D.I. TYPE "D" STD. 840.19 OR 840.28	G.D.I. FRAME WITH GRATE STD. 840.20	G.D.I. FRAME WITH TWO GRATE STD. 840.22	G.D.I. (N.S.) FRAME WITH GRATE STD. 840.24	G.D.I. (N.S.) FRAME WITH TWO GRATES STD. 840.29	J.B. STD. 840.31 OR 840.32	TB G.D.I STD. 840.35	F.E.S. FLARED END SECTION STD	CONVERT TO MH	DRAINAGE PIPE ELBOWS NO. & SIZE	DRAINAGE PIPE ELBOWS NO. & SIZE	CONC. & BRICK PIPE PLUG, C.Y. STD. 840.71	CONC. COLLARS CL. "B" C.Y. STD 840.72	PIPE REMOVAL LIN. FT.	REMARKS
DWY1- 10+22																																		26	remove existing driveway pipe (15" CMP)
SHEET TOTALS																																			

ABBREVIATIONS

C.B.	CATCH BASIN
N.D.I.	NARROW DROP INLET
D.I.	DROP INLET
G.D.I.	GRATED DROP INLET
G.D.I. (N.S.)	GRATED DROP INLET (NARROW SLOT)
J.B.	JUNCTION BOX
M.H.	MANHOLE
T.B.D.I.	TRAFFIC BEARING DROP INLET
T.B.J.B.	TRAFFIC BEARING JUNCTION BOX

Note: Approximate quantities only. Unclassified Excavation, Borrow Excavation, Fine Grading, and Clearing and Grubbing will be paid for at the contract lump sum price for "Grading."

REVISIONS

4/11/2014 10:03:19 AM
G:\OR Projects\OR1100 - NCDOT Group W\430321\Roadway\Proj\430321_RDY_03A_SUMMARY.dgn
G:\CADD\Plot\OR1100\1100_rdy.tbl

THE LOUIS BERGER GROUP, Inc.
1001 Wade Avenue, Suite 400
Raleigh, NC 27605-3322

ROADWAY PLANS

PROJECT REFERENCE NO.	SHEET NO.
17BP.14.R.55	4
R/W SHEET NO.	

ROADWAY DESIGN ENGINEER — NORTH CAROLINA PROFESSIONAL SEAL 16000 — BRIAN D. HATFIELD — REGISTERED ENGINEER — 4/11/14

HYDRAULICS ENGINEER — NORTH CAROLINA PROFESSIONAL SEAL 032134 — JAMES WALKER ROBERTS — REGISTERED ENGINEER — 4-10-14

CURVE DATA FOR -L-

PI Sta 10+19.80	PI Sta 11+62.57	PI Sta 12+48.52	PI Sta 13+43.42	PI Sta 14+34.23	PI Sta 15+78.84
Δ = 2° 52' 13.5" (RT)	Δ = 9° 20' 00.0" (LT)	Δ = 29° 01' 00.0" (LT)	Δ = 44° 18' 01.1" (LT)	Δ = 25° 56' 58.9" (LT)	Δ = 27° 59' 01.8" (RT)
D = 7° 15' 00.0"	D = 12° 45' 00.0"	D = 30° 00' 00.0"	D = 48° 59' 59.9"	D = 27° 30' 00.0"	D = 42° 00' 00.0"
L = 39.59'	L = 73.20'	L = 96.72'	L = 90.41'	L = 94.36'	L = 66.63'
T = 19.80'	T = 36.68'	T = 49.42'	T = 47.60'	T = 48.00'	T = 33.99'
R = 790.29'	R = 449.38'	R = 190.99'	R = 116.93'	R = 208.35'	R = 136.42'
Se = Exist.	Se = Exist.	Se = 0.06	Se = 0.06	Se = Exist.	Se = Exist.

DETAIL A
SPECIAL CUT DITCH
(Not to Scale)

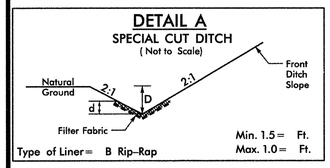

FROM STA. 12+92 TO STA. 13+20 RT
FROM STA. 13+40 TO STA. 13+70 RT

N.T.S. FLOOD PLAIN BENCH DETAIL

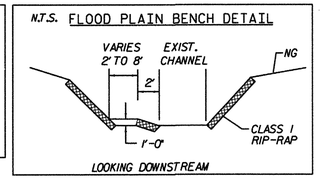

LOOKING DOWNSTREAM

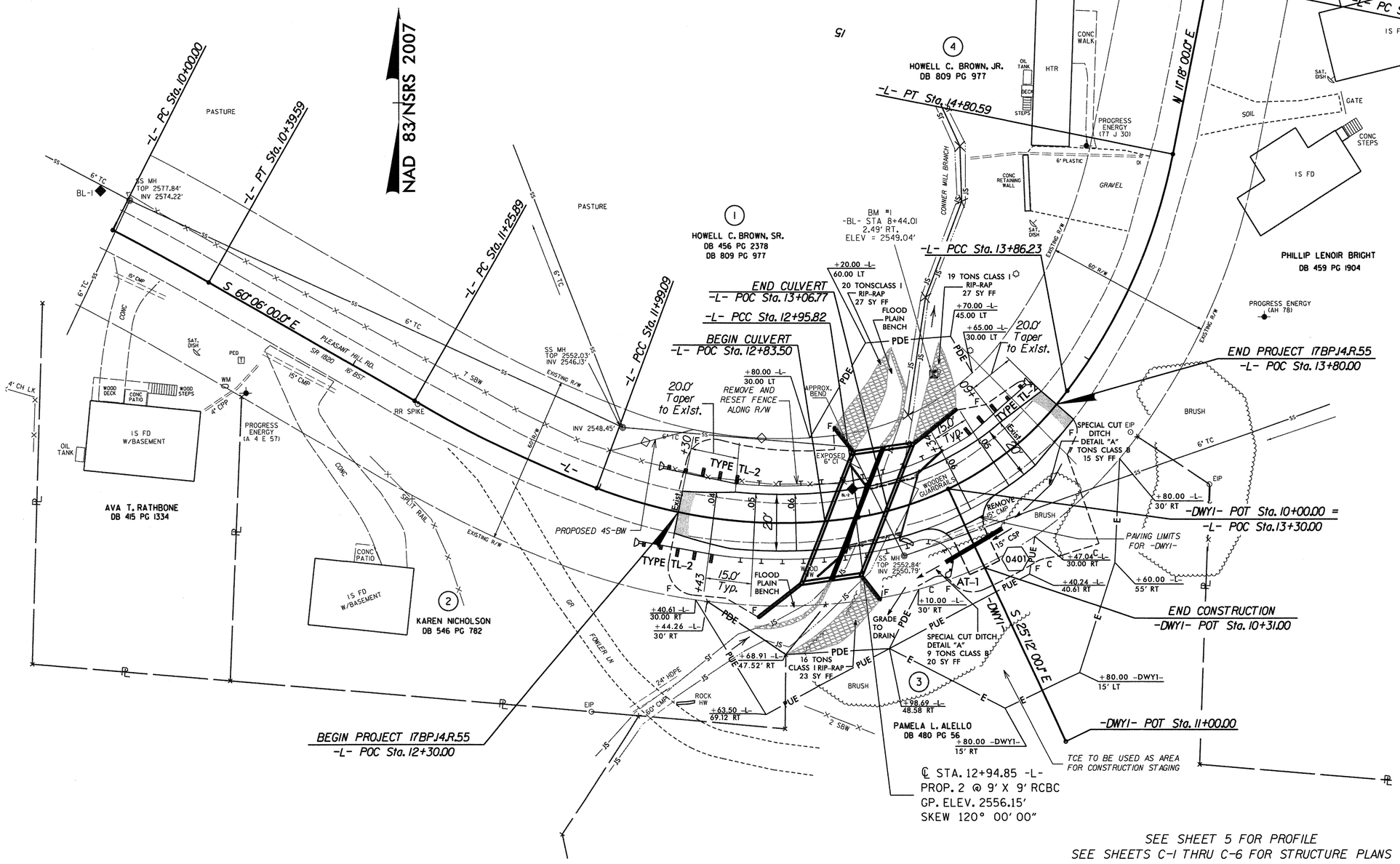

SEE SHEET 5 FOR PROFILE
SEE SHEETS C-1 THRU C-6 FOR STRUCTURE PLANS

THE LOUIS BERGER GROUP, Inc.
1001 Wade Avenue, Suite 400
Raleigh, NC 27605-3322

ROADWAY PLANS

REVISIONS

4/11/2014 10:03:25 AM
G:\OR Projects\DRI100 - NCDOT Group W\430321\Roadway\Proj\430321_RDY_04_PSH.dgn
G:\CADD\Plot\DRI100\1100_rdy.tbl

5/28/99

THE LOUIS BERGER GROUP, Inc.
1001 Wade Avenue, Suite 400
Raleigh, North Carolina 27605

PROJECT REFERENCE NO.	SHEET NO.
17BP.14.R.55	5

ROADWAY DESIGN ENGINEER: NORTH CAROLINA PROFESSIONAL SEAL 16002 ENGINEER JEREMIAH D. HATFIELD 4/11/14

HYDRAULICS ENGINEER: NORTH CAROLINA PROFESSIONAL SEAL 032134 ENGINEER WALTER ROBERTS 4-11-14

0 20 40 HORIZONTAL
0 4 8 VERTICAL

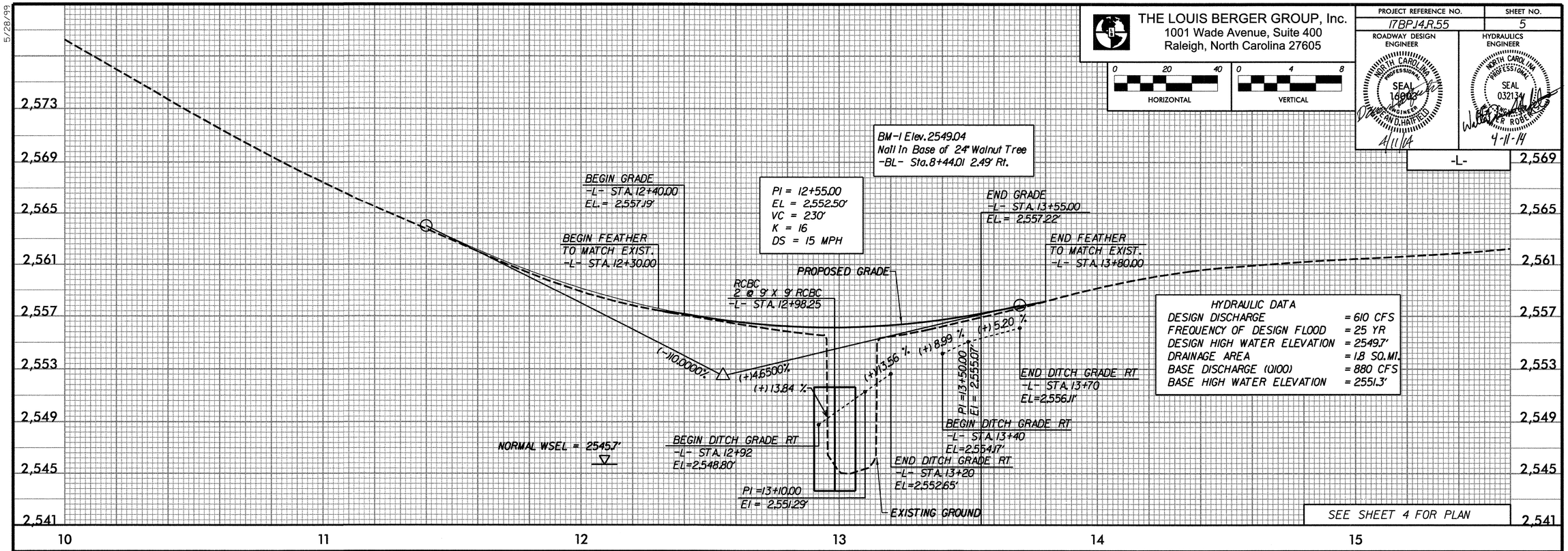

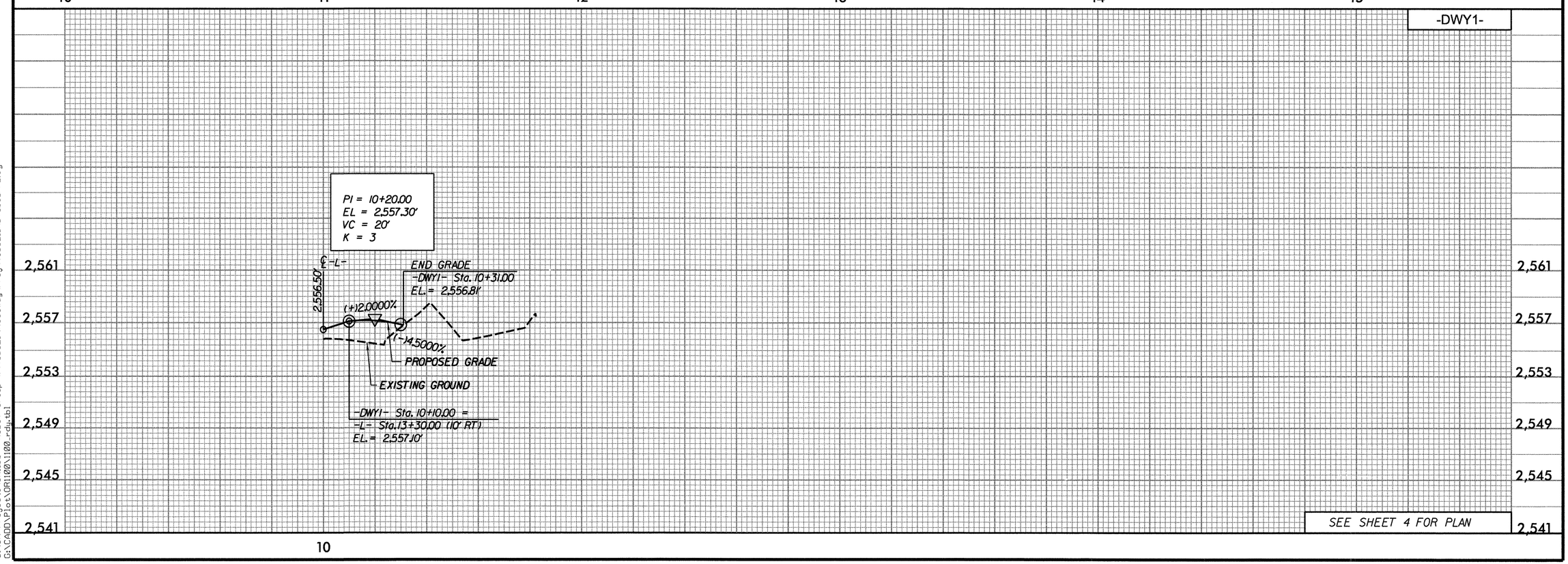

4/11/2014 10:03:28 AM
G:\DR Projects\DR1100 - NCDOT Group W\430321\Roadway\Proj\430321_RDY_05_PFL.dgn
G:\CADD\Plots\DR1100\1100_rdy.tbl

STATE OF NORTH CAROLINA
DIVISION OF HIGHWAYS

TRANSPORTATION MANAGEMENT PLAN

HAYWOOD COUNTY

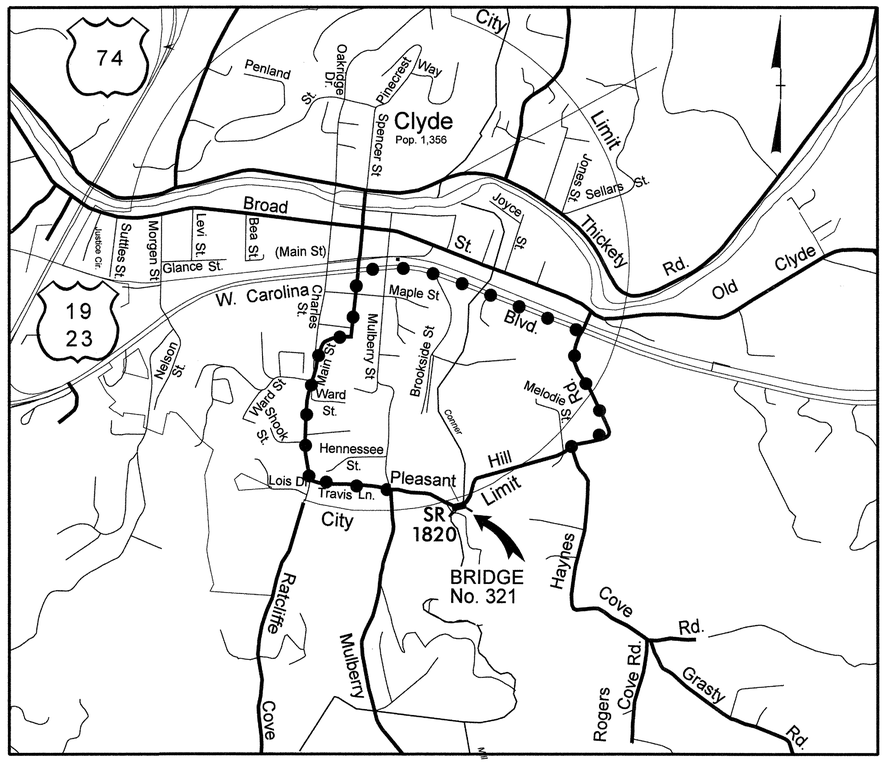

VICINITY MAP NTS

OFF-SITE DETOUR

LOCATION: BRIDGE NO. 321 ON SR 1820 OVER CORNER MILL BRANCH

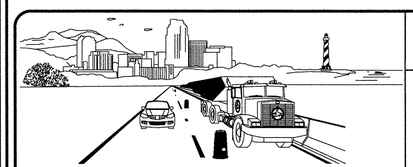

WORK ZONE SAFETY & MOBILITY
"from the MOUNTAINS to the COAST"

N.C.D.O.T. WORK ZONE TRAFFIC CONTROL
1561 MAIL SERVICE CENTER (MSC) RALEIGH, NC 27699-1561
750 N. GREENFIELD PARKWAY, GARNER, NC 27529 (DELIVERY)
PHONE: (919) 773-2800 FAX: (919) 771-2745

J. S. BOURNE, P.E. — *STATE TRAFFIC MANAGEMENT ENGINEER*
DEAN D HATFIELD, P.E — *TRAFFIC CONTROL PROJECT ENGINEER*
CASEY W. WHITE, P.E. — *TRAFFIC CONTROL PROJECT DESIGN ENGINEER*
J. O. MORRISON, P.E. — *TRAFFIC CONTROL DESIGN ENGINEER*

DIVISION OF HIGHWAYS * STATE OF NORTH CAROLINA * DEPARTMENT OF TRANSPORTATION * WORK ZONE TRAFFIC CONTROL

INDEX OF SHEETS

SHEET NO.	TITLE
TMP-1	TITLE SHEET, AND INDEX OF SHEETS
TMP-1A	LIST OF APPLICABLE ROADWAY STANDARD DRAWINGS, LEGEND, AND TEMPORARY PAVEMENT MARKING
TMP-1B	TRANSPORTATION OPERATIONS PLAN: (MANAGEMENT STRATEGIES, GENERAL NOTES AND LOCAL NOTES) AND SPECIAL SIGN DETAIL
TMP-2	OFFSITE DETOUR ROUTE AND SIGNING

THE LOUIS BERGER GROUP, Inc.
1001 Wade Avenue, Suite 400
Raleigh, North Carolina 27605

APPROVED: Dean D Hatfield
DATE: 4/11/14

SEAL

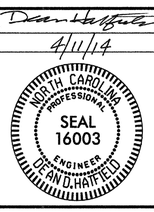

SHEET NO.
TMP-1

PROJECT: 17BP.14.R.55

4/11/2014 10:03:40 AM
G:\OR Projects\OR1100 - NCDOT Group W\430321\Roadway\Proj\430321_RDY_06_TMP1.dgn
1100_rdy_pmp.tbl

PROJ. REFERENCE NO.	SHEET NO.
17BP.14.R.55	TMP-1A

ROADWAY STANDARD DRAWINGS

THE FOLLOWING ROADWAY STANDARDS AS SHOWN IN "ROADWAY STANDARD DRAWINGS" - PROJECT SERVICES UNIT - N.C. DEPARTMENT OF TRANSPORTATION - RALEIGH, N.C., DATED JANUARY 2012 ARE APPLICABLE TO THIS PROJECT AND BY REFERENCE HEREBY ARE CONSIDERED A PART OF THESE PLANS:

STD. NO.	TITLE
1101.03	TEMPORARY ROAD CLOSURES
1101.11	TRAFFIC CONTROL DESIGN TABLES
1110.01	STATIONARY WORK ZONE SIGNS
1130.01	DRUMS
1145.01	BARRICADES
1205.01	PAVEMENT MARKINGS - LINE TYPES & OFFSETS
1205.02	PAVEMENT MARKINGS - 2 LANE & MULTILANE ROADWAYS
1261.01	GUARDRAIL & BARRIER DELINEATOR SPACING
1261.02	GUARDRAIL & BARRIER DELINEATOR TYPES
1262.01	GUARDRAIL END DELINEATION

LEGEND

GENERAL

DIRECTION OF TRAFFIC FLOW

NORTH ARROW

TRAFFIC CONTROL DEVICES

BARRICADE (TYPE III)

TEMPORARY SIGNING

STATIONARY SIGN

PAVEMENT MARKINGS

EXISTING LINES

TEMPORARY LINES

APPROVED: DATE: 4/11/14

SEAL

NORTH CAROLINA PROFESSIONAL SEAL 16003 ENGINEER DEAN D. HATFIELD

DIVISION OF HIGHWAYS STATE OF NORTH CAROLINA DEPARTMENT OF TRANSPORTATION WORK ZONE TRAFFIC CONTROL

ROADWAY STANDARD DRAWINGS & LEGEND

4/11/2014 10:03:51 AM
G:\OR Projects\OR1100 - NCDOT Group W\430321\Roadway\Proj\430321_RDY_06_TMP1A.dgn
1100_rdy_pmp.tbl

MANAGEMENT STRATEGIES

TRAFFIC WILL BE DETOURED OFFSITE DURING CONSTRUCTION ALONG A ROUTE DETERMINED BY NCDOT.

THE OFSITE DETOUR WILL INCLUDE TRAVIS LN, MAIN ST AND US 19/23 (W. CAROLINA BLVD). (SEE SHEET TMP-2)

ACCESS TO -DWY1- SHALL BE MAINTAINED AT ALL TIMES.

PROJECT PHASING

STEP 1:
- INSTALL OFF SITE DETOUR AND ROAD CLOSURE SIGNING (PROVIDED BY CONTRACTOR).
- USING RDWY, STD 1101.03, SHEET 1 OF 9, CLOSE SR 1820 (PLEASANT HILL RD) FROM -L- STA 12+00+/- TO -L- STA 13+90+/- AND PLACE TRAFFIC ONTO OFF SITE DETOUR AS SHOWN ON SHEET TMP-2.

STEP 2:
- MAINTAIN ACCESS TO -DWY1- AT ALL TIMES. SHOULD FLOODING OCCUR ON FOWLER LN, RELOCATE BARRIER FROM -L- STA 13+90+/- TO -L- STA 13+20+/-. RESIDENT ENGINEER TO DIRECT SIGNAGE TO MEET FLOOD ACCESS CONDITIONS.
- REMOVE EXISTING BRIDGE No. 321 AND APPROACHES. CONSTRUCT PROPOSED CULVERT UP TO AND INCLUDING THE FINAL LAYER OF SURFACE COURSE AND FINAL PAINT PAVEMENT MARKINGS FROM -L- STA 12+30+/- TO -L- STA 13+60+/- (SEE CONSTRUCTION AND PAVEMENT MARKING PLANS)

STEP 3:
- REMOVE ALL TRAFFIC CONTROL DEVICES, SIGNING AND DETOUR ROUTE SIGNING.
- OPEN TO FINAL TRAFFIC PATTERN.

SPECIAL SIGN DETAIL

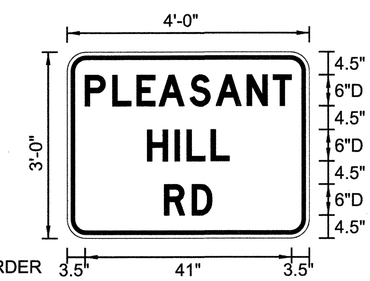

BORDER
R=3"
TH=0.75"
IN=0.75"
BLACK ON FLOURESCENT ORANGE

NOTE:

1. LETTER SPACINGS ARE TO START OF NEXT LETTER.
2. LEGEND AND BORDER SHALL BE DIRECT APPLIED BLACK NON-REFLECTIVE SHEETING.
3. BACKGROUND SHALL BE TYPE VII, VIII, OR IX (PRISMATIC) FLOURESCENT ORANGE RETROREFLECTIVE SHEETING.

LETTER POSITIONS

3.5	P 5.5	L 4.8	E 4.4	A 6.1	S 5.2	A 6.1	N 5.2	T 3.7	3.5

15.9	H 5.4	I 2.4	L 4.8	L 3.7	15.8

19.2	R 5.5	D 4	19.3

SERIES/SIZE, TEXT LENGTH

D 2000, 41

D 2000, 16.3

D 2000, 9.5

GENERAL NOTES / LOCAL NOTES

CHANGES MAY BE REQUIRED WHEN PHYSICAL DIMENSIONS IN THE DETAIL DRAWINGS, STANDARD DETAILS, AND ROADWAY DETAILS ARE NOT ATTAINABLE TO MEET FIELD CONDITIONS OR RESULT IN DUPLICATE OR UNDESIRED OVERLAPPING OF DEVICES. MODIFICATION MAY INCLUDE: MOVING, SUPPLEMENTING, COVERING, OR REMOVAL OF DEVICES AS DIRECTED BY THE ENGINEER.

THE FOLLOWING GENERAL NOTES APPLY AT ALL TIMES FOR THE DURATION OF THE CONSTRUCTION PROJECT EXCEPT WHEN OTHERWISE NOTED IN THE PLAN OR DIRECTED BY THE ENGINEER.

PAVEMENT EDGE DROP OFF REQUIREMENTS

A) BACKFILL AT A 6:1 SLOPE UP TO THE EDGE AND ELEVATION OF EXISTING PAVEMENT IN AREAS ADJACENT TO AN OPENED TRAVEL LANE THAT HAS AN EDGE OF PAVEMENT DROP-OFF AS FOLLOWS:

BACKFILL DROP-OFFS THAT EXCEED 2 INCHES ON ROADWAYS WITH POSTED SPEED LIMITS OF 45 MPH OR GREATER.

BACKFILL DROP-OFFS THAT EXCEED 3 INCHES ON ROADWAYS WITH POSTED SPEED LIMITS LESS THAN 45 MPH.

BACKFILL WITH SUITABLE COMPACTED MATERIAL, AS APPROVED BY THE ENGINEER, AT NO EXPENSE TO THE DEPARTMENT.

TRAFFIC PATTERN ALTERATIONS

B) NOTIFY THE ENGINEER TWENTY ONE (21) CALENDAR DAYS PRIOR TO ANY TRAFFIC PATTERN ALTERATION.

SIGNING

C) PROVIDE SIGNING AND DEVICES REQUIRED TO CLOSE THE ROAD ACCORDING TO THE ROADWAY STANDARD DRAWINGS AND TRAFFIC CONTROL PLANS.

PROVIDE SIGNING REQUIRED FOR THE OFF-SITE DETOUR ROUTE AS SHOWN IN THE TRAFFIC CONTROL PLANS.

D) COVER OR REMOVE ALL SIGNS AND DEVICES REQUIRED TO CLOSE THE ROAD WHEN ROAD CLOSURE IS NOT IN OPERATION.

COVER OR REMOVE ALL SIGNS REQUIRED FOR THE OFF-SITE DETOUR WHEN THE DETOUR IS NOT IN OPERATION.

E) ENSURE ALL NECESSARY SIGNING IS IN PLACE PRIOR TO ALTERING ANY TRAFFIC PATTERN.

APPROVED: DATE: 4/11/14

SEAL

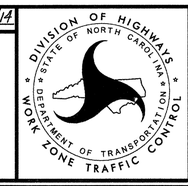

TRANSPORTATION OPERATIONS PLAN

4/11/2014 10:04:02 AM
G:\OR Projects\OR1100 - NCDOT Group W\430321\Roadway\Proj\430321_RDY_06_TMP1B.dgn
1100_rdy_pmp.tb

PROJ. REFERENCE NO.	SHEET NO.
17BP.14.R.55	TMP-2

NOTES:

- ALL DETOUR SIGN LOCATIONS ARE APPROXIMATE.
- ALL DETOUR SIGNS ARE BLACK ON ORANGE UNLESS OTHERWISE NOTED.

★ SEE ROADWAY STANDARD DRAWING NO. 1101.03, SHEET 1 OF 9 FOR ADDITIONAL WORK ZONE SIGNS AND APPLICABLE NOTES.

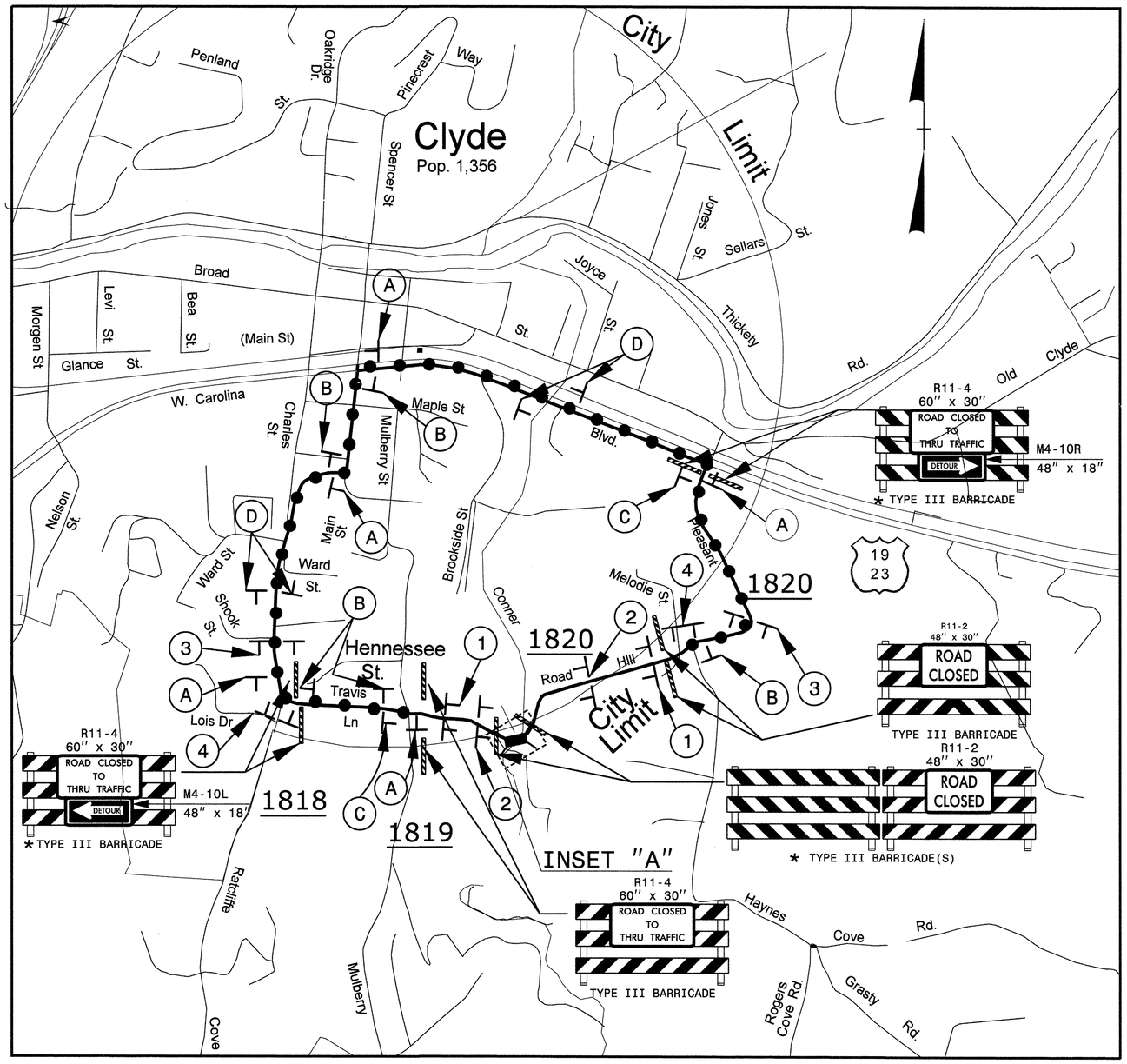

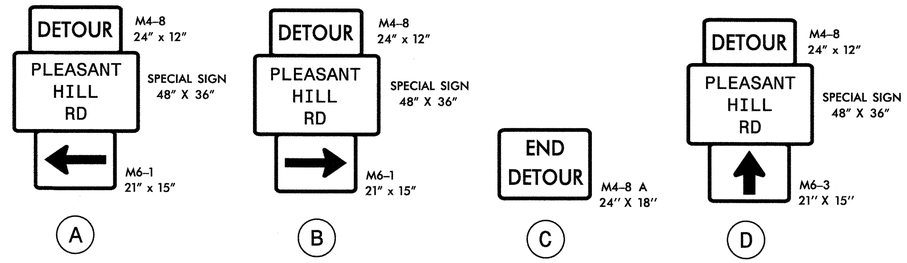

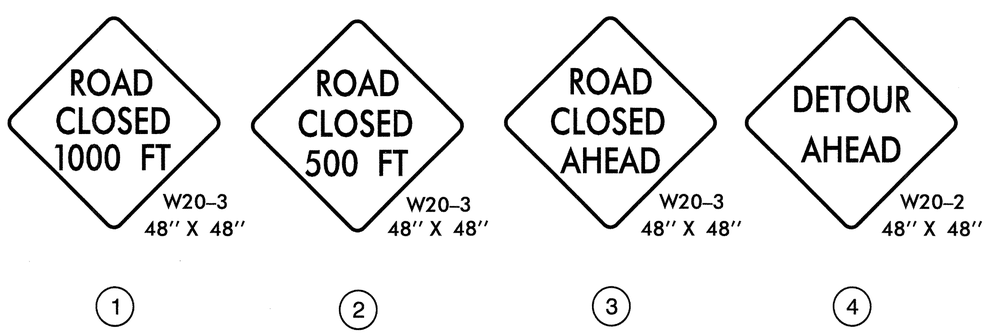

NOTE:
MAINTAIN ACCESS TO FOWLER LN. AT ALL TIMES.

IF FLOODING OCCURS RELOCATE BARRICADE FROM -L- STA 13+90+/- TO -L- STA 13+20+/-. RESIDENT ENGINEER WILL DIRECT HOW TO MAINTAIN ACCESS TO FOWLER LN.

THE LOUIS BERGER GROUP, Inc.
1001 Wade Avenue, Suite 400
Raleigh, North Carolina 27605

APPROVED: DATE: 4/11/14

SEAL

NORTH CAROLINA PROFESSIONAL SEAL 16003 ENGINEER DEAN D. HATFIELD

DIVISION OF HIGHWAYS · STATE OF NORTH CAROLINA · DEPARTMENT OF TRANSPORTATION · WORK ZONE TRAFFIC CONTROL

OFF SITE DETOUR ROUTE AND SIGNING

4/11/2014 10:04:15 AM
G:\OR Projects\OR1100 - NCDOT Group W\430321\Roadway\Proj\430321_RDY_06_TMP2.dgn
1100_rdy_pmp.tbl

STATE	PROJECT NO.	SHEET NO.	TOTAL SHTS.
N.C.	17BP.14.R.55	PMP-1	2

APPROVED: Dean Hatfield
DATE: 4/11/14
SEAL

STATE OF NORTH CAROLINA
DEPARTMENT OF TRANSPORTATION

PAVEMENT MARKING PLANS

LOCATION: BRIDGE NO. 321 ON SR 1820 OVER CORNER MILL BRANCH

ROADWAY STANDARD DRAWINGS

THE FOLLOWING ROADWAY STANDARDS AS APPEAR IN "ROADWAY STANDARD DRAWINGS"-ROADWAY DESIGN UNIT-N.C. DEPARTMENT OF TRANSPORTATION-RALEIGH, N.C., DATED JULY 2012 ARE APPLICABLE TO THIS PROJECT AND BY REFERENCE HEREBY ARE CONSIDERED A PART OF THESE PLANS:

STD. NO.	TITLE
1205.01	PAVEMENT MARKINGS - LINE TYPES & OFFSETS
1205.02	PAVEMENT MARKINGS - 2 LANE & MULTILANE ROADWAYS

PAVEMENT MARKING SCHEDULE

ASPHALT PAVEMENT DESIGN
(AS SHOWN)

PAVEMENT MARKING LINES

PA - PAINT - WHITE EDGELINE (4")
PI - PAINT - YELLOW DOUBLE CENTER LINE (4")

GENERAL NOTES

THE FOLLOWING NOTES APPLY AT ALL TIMES FOR THE DURATION OF THE CONSTRUCTION PROJECT, EXCEPT WHEN NOTED IN THE PLAN, OR DIRECTED BY THE ENGINEER.

A) INSTALL PAVEMENT MARKINGS AND PAVEMENT MARKERS ON THE FINAL SURFACE AS FOLLOWS:

ASPHALT PAVEMENT DESIGN:

ROAD NAME	MARKING	MARKER
ALL	PAINT	NONE

B) TIE PROPOSED PAVEMENT MARKING LINES TO EXISTING PAVEMENT MARKING LINES.

C) REMOVE/ REPLACE ANY CONFLICTING/ DAMAGED PAVEMENT MARKINGS AND MARKERS.

D) PASSING ZONES WILL BE DETERMINED IN THE FIELD AND MUST BE APPROVED BY THE ENGINEER.

INDEX

SHEET NO.	DESCRIPTION
PMP-1	PAVEMENT MARKING PLAN COVER SHEET
PMP-2	PAVEMENT MARKING DETAIL

THE LOUIS BERGER GROUP, Inc.
1001 Wade Avenue, Suite 400
Raleigh, NC 27605-3322

ROADWAY PLANS

4/11/2014 10:04:26 AM
G:\OR Projects\OR1100 - NCDOT Group W\430321\Roadway\Proj\430321_RDY_07_PMP_01.dgn
1100_rdy_pmp.tbl

STATE	PROJECT NO.	SHEET NO.	TOTAL SHTS.
N.C.	17BP.14.R.55	PMP-2	2

APPROVED: Dean D. Hatfield
DATE: 4/11/14
SEAL

NORTH CAROLINA PROFESSIONAL SEAL 16003 ENGINEER DEAN D. HATFIELD

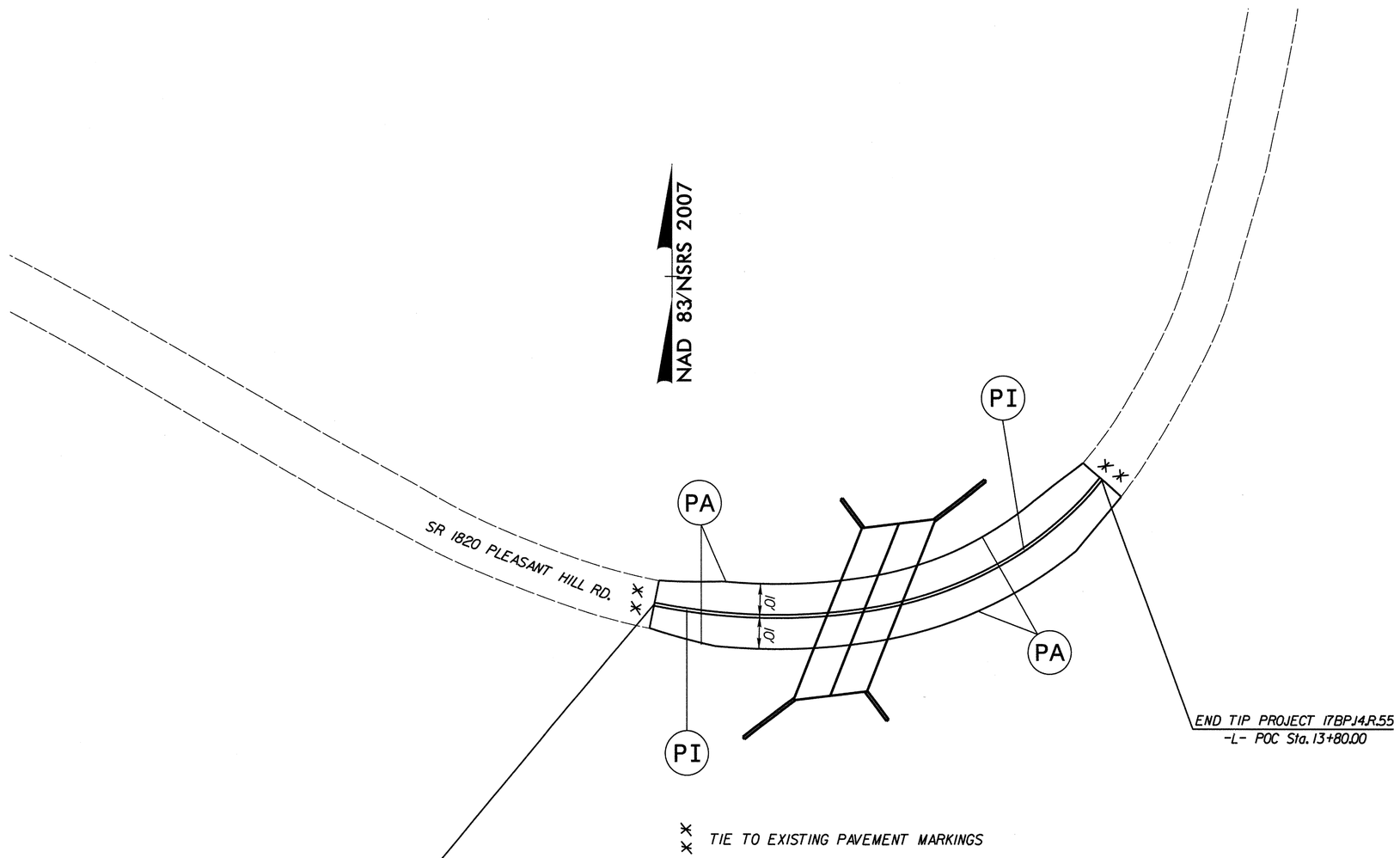

NOTE: PAINT IS TO BE DOUBLE COATED

LEGEND

(PA) - PAINT - WHITE EDGELINE (4")

(PI) - PAINT - YELLOW DOUBLE CENTER LINE (4")

PAVEMENT MARKING DETAIL
PLEASANT HILL RD.

THE LOUIS BERGER GROUP, Inc.
1001 Wade Avenue, Suite 400
Raleigh, NC 27605-3322

ROADWAY PLANS

4/11/2014 10:04:36 AM
G:\DR Projects\DR1100 - NCDOT Group W\430321\Roadway\Proj\430321_RDY_07_PMP_02.dgn
1100_rdy_pmp.tbl

PROJECT REFERENCE NO.	SHEET NO.
17BP.14.R.55	EC-01/CONST.04
R/W SHEET NO.	

0' 20' 40'

EROSION CONTROL PLANS

2012 STANDARD DRAWINGS

1604.01	Railroad Erosion Control Detail	1632.01	Rock Inlet Sediment Trap Type A
1605.01	Temporary Silt Fence	1632.02	Rock Inlet Sediment Trap Type B
1606.01	Special Sediment Control Fence	1632.03	Rock Inlet Sediment Trap Type C
1607.01	Gravel Construction Entrance	1633.01	Temporary Rock Silt Check Type A
1622.01	Temporary Berms and Slope Drains	1633.02	Temporary Rock Silt Check Type B
1630.01	Riser Basin	1634.01	Temporary Rock Sediment Dam Type A
1630.02	Silt Basin Type B	1634.02	Temporary Rock Sediment Dam Type B
1630.03	Temporary Silt Ditch	1635.01	Rock Pipe Inlet Sediment Trap Type A
1630.04	Stilling Basin	1635.02	Rock Pipe Inlet Sediment Trap Type B
1630.05	Temporary Diversion	1640.01	Coir Fiber Baffle
1630.06	Special Stilling Basin	1645.01	Temporary Stream Crossing
1631.01	Matting Installation		

Std. #	Description	Symbol
1632.03	Rock Inlet Sediment Trap Type C	
1633.01	Temporary Rock Silt Check Type-A	
	Wattle / Coir Fiber Wattle	CFW

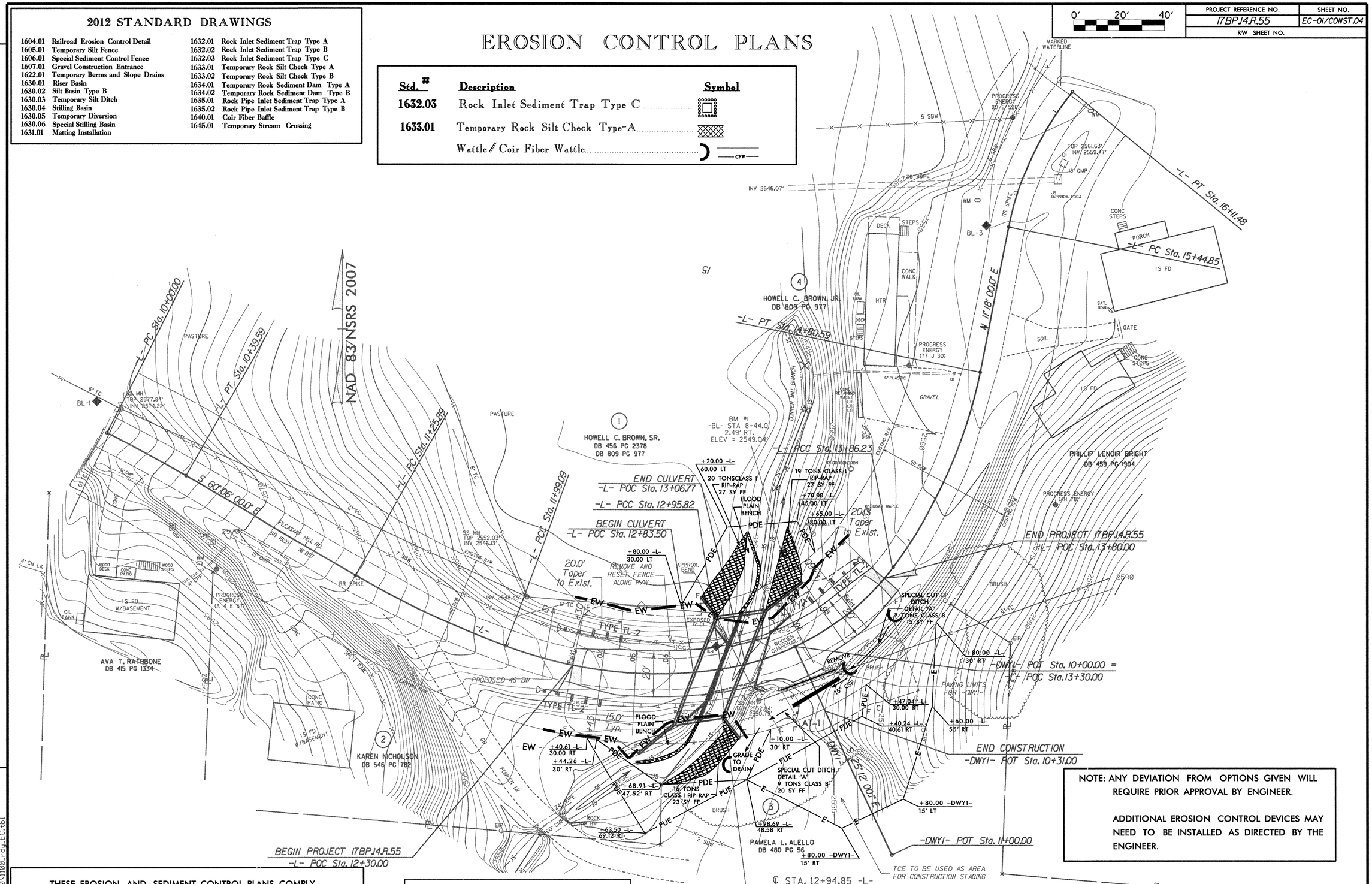

NOTE: ANY DEVIATION FROM OPTIONS GIVEN WILL REQUIRE PRIOR APPROVAL BY ENGINEER.

ADDITIONAL EROSION CONTROL DEVICES MAY NEED TO BE INSTALLED AS DIRECTED BY THE ENGINEER.

THESE EROSION AND SEDIMENT CONTROL PLANS COMPLY WITH THE REGULATIONS SET FORTH BY THE NCG-010000 GENERAL CONSTRUCTION PERMIT EFFECTIVE AUGUST 3, 2011 ISSUED BY THE NORTH CAROLINA DEPARTMENT OF ENVIRONMENT AND NATURAL RESOURCES DIVISION OF WATER QUALITY

ROADSIDE ENVIRONMENTAL UNIT
DEPARTMENT OF TRANSPORTATION
DIVISION OF HIGHWAYS
RALEIGH, N.C.

2012 STANDARD SPECIFICATIONS

Rana Stansell, PE
LEVEL III A: Designer of Erosion and Sediment Control Plans
Certification Number: 635

THE LOUIS BERGER GROUP, Inc.
1001 Wade Avenue, Suite 400
Raleigh, NC 27605-3322

ROADWAY PLANS

REVISIONS

4/11/2014 10:04:43 AM
G:\OR Projects\OR1100 - NCDOT Group W\430321\Roadway\Proj\430321_RDY_08_EC_01.dgn
G:\CADD\Plot\OR1100\1100_rdy_EC.tbl

STATE OF NORTH CAROLINA
DIVISION OF HIGHWAYS

SOIL STABILIZATION TIMEFRAMES

SITE DESCRIPTION	STABILIZATION TIME	TIMEFRAME EXCEPTIONS
PERIMETER DIKES, SWALES, DITCHES AND SLOPES	7 DAYS	NONE
HIGH QUALITY WATER (HOW) ZONES	7 DAYS	NONE
SLOPES STEEPER THAN 3:1	7 DAYS	IF SLOPES ARE 10' OR LESS IN LENGTH AND ARE NOT STEEPER THAN 2:1, 14 DAYS ARE ALLOWED.
SLOPES 3:1 OR FLATTER	14 DAYS	7 DAYS FOR SLOPES GREATER THAN 50' IN LENGTH.
ALL OTHER AREAS WITH SLOPES FLATTER THAN 4:1	14 DAYS	NONE, EXCEPT FOR PERIMETERS AND HOW ZONES.

REVISIONS

4/11/2014 10:04:48 AM
G:\OR Projects\OR1100 - NCDOT Group W\430321\Roadway\Proj\430321_RDY_08_EC_02.dgn
G:\CADD\Plot\OR1100\1100_rdy_EC.tbl

PROJECT REFERENCE NO.	SHEET NO.
17BP.14.R.55	EC-3
R/W SHEET NO.	

COIR FIBER WATTLE BARRIER DETAIL

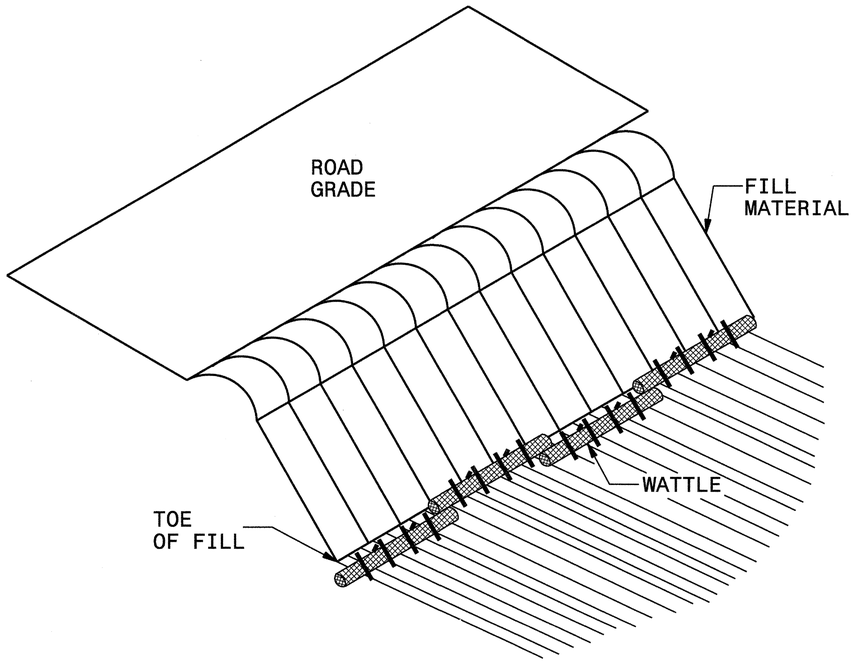

ISOMETRIC VIEW

NOTES:

USE MINIMUM 12 IN. DIAMETER COIR FIBER (COCONUT) WATTLE AND LENGTH OF 10 FT.

EXCAVATE A 1 TO 2 INCH TRENCH FOR WATTLE TO BE PLACED.

DO NOT PLACE WATTLES ON TOE OF SLOPE.

USE 2 FT. WOODEN STAKES WITH A 2 IN. BY 2 IN. NOMINAL CROSS SECTION.

INSTALL A MINIMUM OF 2 UPSLOPE STAKES AND 4 DOWNSLOPE STAKES AT AN ANGLE TO WEDGE WATTLE TO GROUND.

PROVIDE STAPLES MADE OF 0.125 IN. DIAMETER STEEL WIRE FORMED INTO A U SHAPE NOT LESS THAN 12″ IN LENGTH.

INSTALL STAPLES APPROXIMATELY EVERY 1 LINEAR FOOT ON BOTH SIDES OF WATTLE AND AT EACH END TO SECURE IT TO THE SOIL.

FOR BREAKS ALONG LARGE SLOPES, USE MAXIMUM SPACING OF 20 FT.

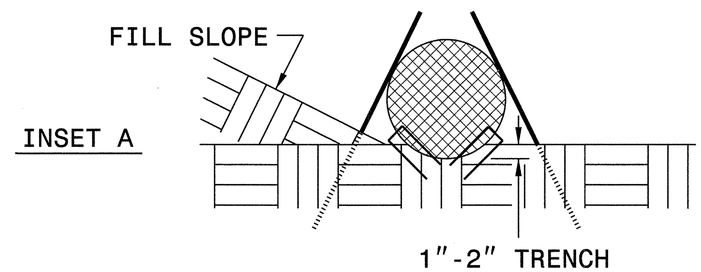

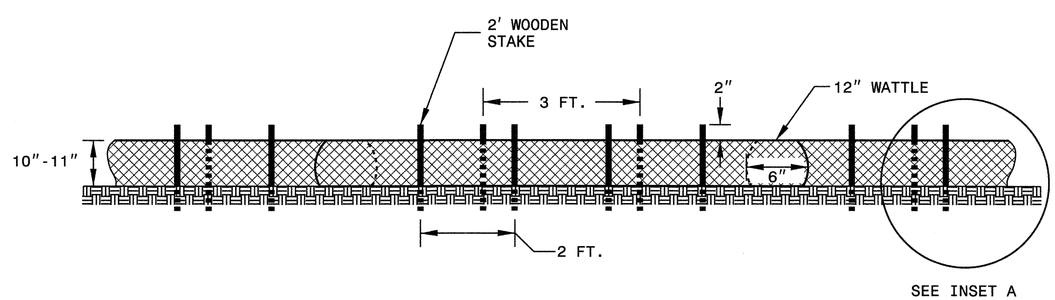

FRONT VIEW

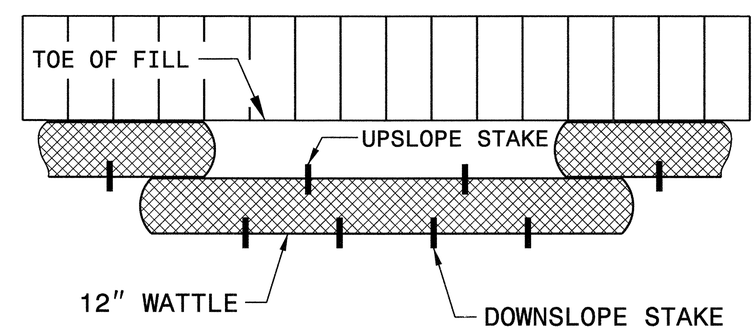

TOP VIEW

THE LOUIS BERGER GROUP, Inc.
1001 Wade Avenue, Suite 400
Raleigh, NC 27605-3322

ROADWAY PLANS

REVISIONS

4/11/2014 10:04:53 AM
G:\DR Projects\DR1100 - NCDOT Group W\430321\Roadway\Proj\430321_RDY_08_EC_03.dgn
G:\CADD\Plot\DR1100\1100_rdy_EC.tbl

PROJECT REFERENCE NO.	SHEET NO.
17BP.14.R.55	EC-04
R/W SHEET NO.	

WATTLE DETAIL

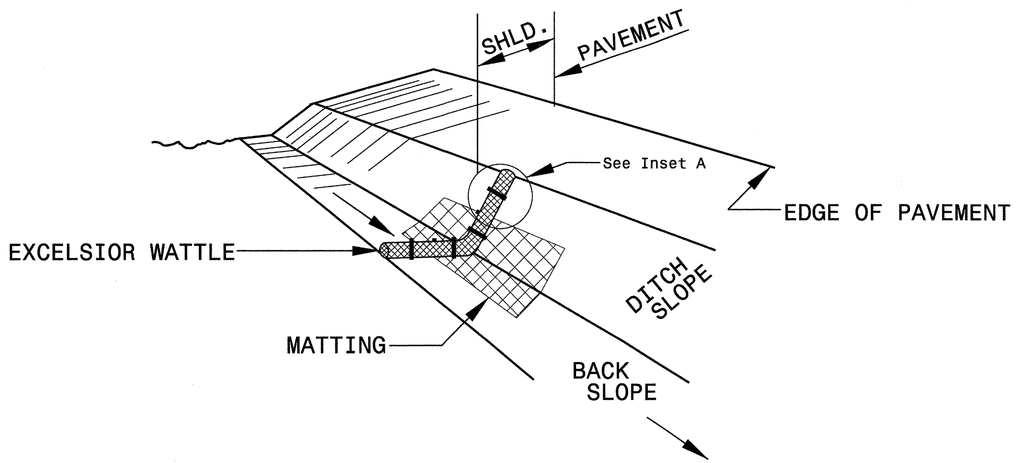

ISOMETRIC VIEW

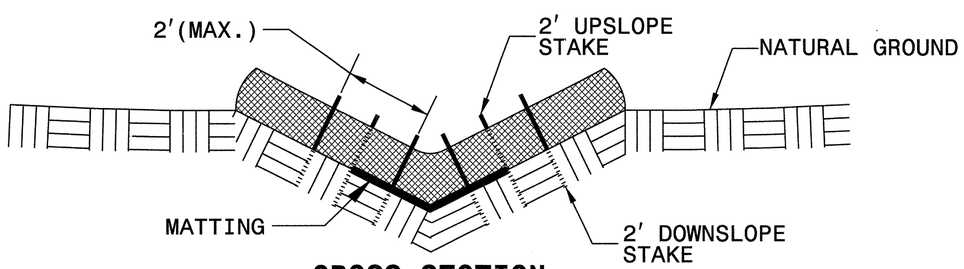

CROSS SECTION VEE DITCH

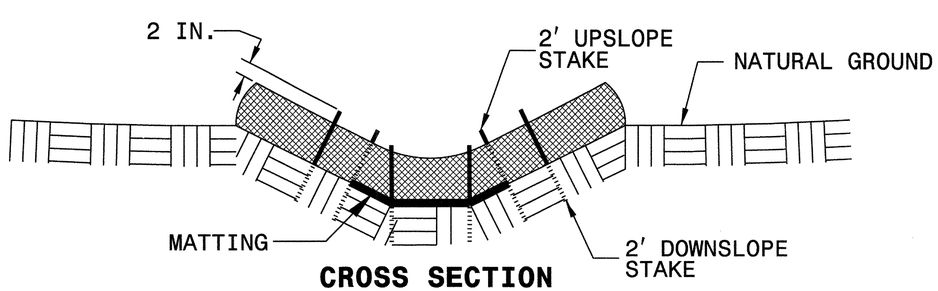

CROSS SECTION TRAPEZOIDAL DITCH

NOTES:

USE MINIMUM 12 IN. DIAMETER EXCELSIOR WATTLE.

USE 2 FT. WOODEN STAKES WITH A 2 IN. BY 2 IN. NOMINAL CROSS SECTION.

ONLY INSTALL WATTLE(S) TO A HEIGHT IN DITCH SO FLOW WILL NOT WASH AROUND WATTLE AND SCOUR DITCH SLOPES AND AS DIRECTED.

INSTALL A MINIMUM OF 2 UPSLOPE STAKES AND 4 DOWNSLOPE STAKES AT AN ANGLE TO WEDGE WATTLE TO BOTTOM OF DITCH.

PROVIDE STAPLES MADE OF 0.125 IN. DIAMETER STEEL WIRE FORMED INTO A U SHAPE NOT LESS THAN 12" IN LENGTH.

INSTALL STAPLES APPROXIMATELY EVERY 1 LINEAR FOOT ON BOTH SIDES OF WATTLE AND AT EACH END TO SECURE IT TO THE SOIL.

INSTALL MATTING IN ACCORDANCE WITH SECTION 1631 OF THE STANDARD SPECIFICATIONS.

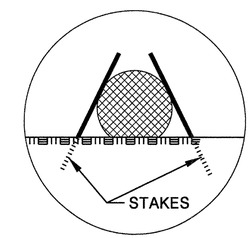

INSET A

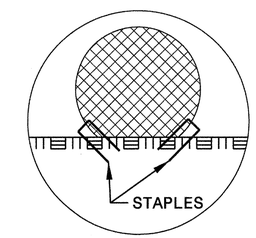

INSET B

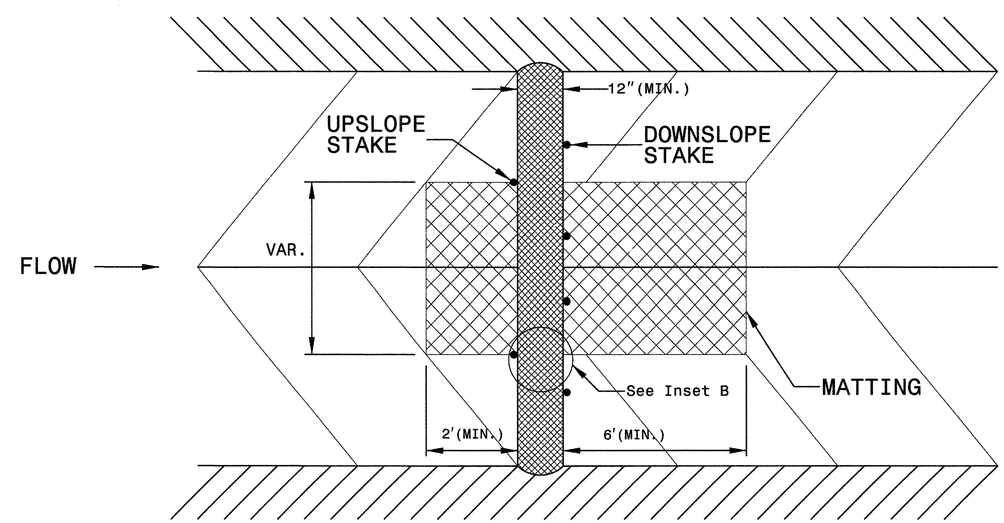

TOP VIEW

THE LOUIS BERGER GROUP, Inc.
1001 Wade Avenue, Suite 400
Raleigh, NC 27605-3322

ROADWAY PLANS

REVISIONS

4/11/2014 10:04:58 AM
G:\OR Projects\OR1100 - NCDOT Group W\430321\Roadway\Proj\430321_RDY_08_EC_04.dgn
G:\CADD\Plot\OR1100\1100_rdy_EC.tbl

0' 20' 40'	PROJECT REFERENCE NO.	SHEET NO.
	17BP.14.R.55	EC-05
	R/W SHEET NO.	

CULVERT CONSTRUCTION SEQUENCE STA. 12 + 94.85 –L–

PHASE I

1) INSTALL IMPERVIOUS DIKE UPSTREAM AND DOWNSTREAM OF EXISTING BRIDGE AS SHOWN
2) DEWATER WORK AREA UTILIZING SPECIAL STILLING BASIN
3) REMOVE EXISTING BRIDGE AND CONSTRUCT 1ST CELL OF PROPOSED 2-9'x9' RCBC, WINGWALLS, & BANK WORK
4) REMOVE IMPERVIOUS DIKES

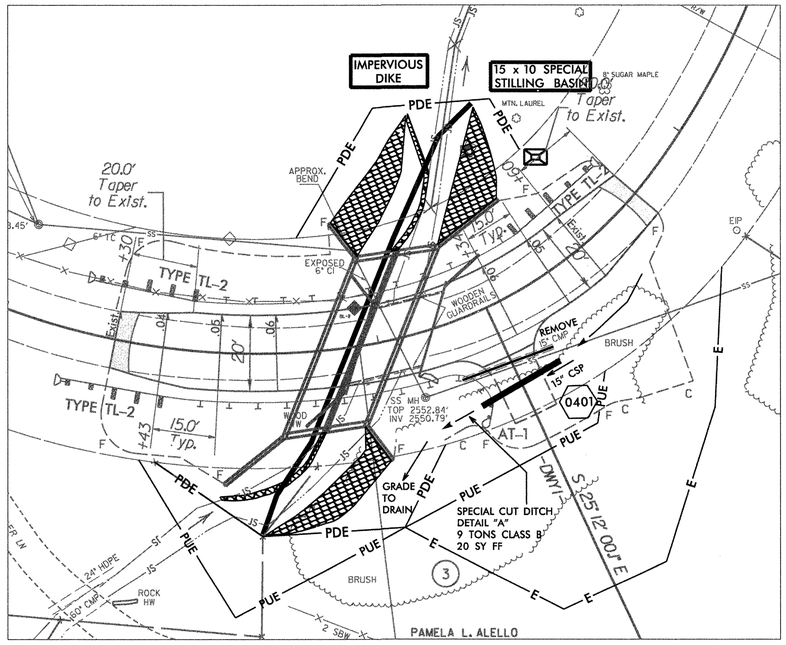

PHASE II

1) INSTALL IMPERVIOUS DIKE UPSTREAM AND DOWNSTREAM OF EXISTING BRIDGE AS SHOWN
2) DEWATER WORK AREA UTILIZING SPECIAL STILLING BASIN
3) CONSTRUCT 2ND CELL OF PROPOSED 2-9'x9' RCBC, WINGWALLS, FLOODPLAIN BENCH & BANK WORK
4) REMOVE IMPERVIOUS DIKES

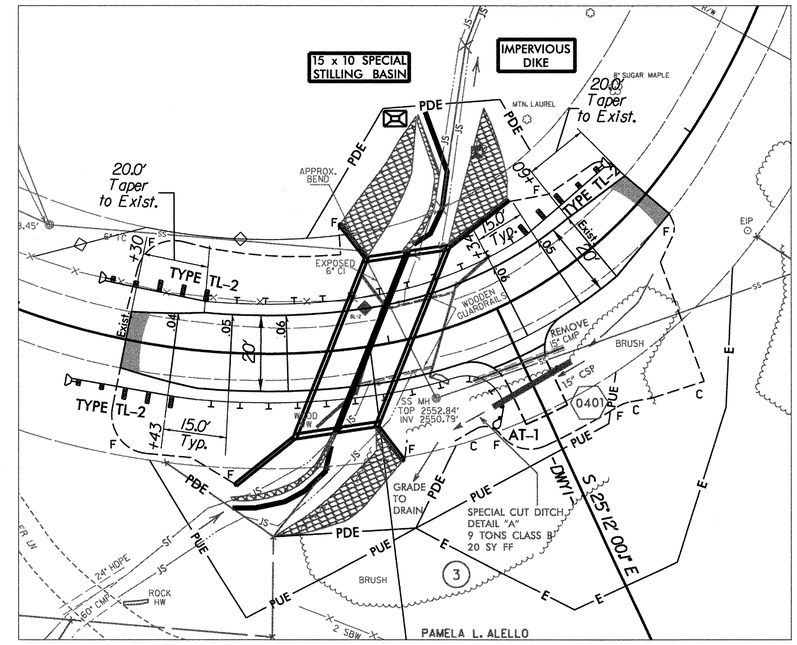

REVISIONS

4/11/2014 10:05:03 AM
G:\OR Projects\OR1100 - NCDOT Group W\430321\Roadway\Proj\430321_RDY_08_EC_05.dgn
G:\CADD\Plot\OR1100\1100_rdy_EC.tbl

THE LOUIS BERGER GROUP, Inc.
1001 Wade Avenue, Suite 400
Raleigh, NC 27605-3322

ROADWAY PLANS

STATE OF NORTH CAROLINA
DIVISION OF HIGHWAYS

HAYWOOD COUNTY

STATE	STATE PROJECT REFERENCE NO.	SHEET NO.	TOTAL SHEETS
N.C.	17BP.14.R.55	1	

STATE PROJ. NO.	F.A. PROJ. NO.	DESCRIPTION
17BP.14.R.55		

LOCATION: BRIDGE NO. 321 ON SR 1820 OVER CONNER MILL BRANCH

TYPE OF WORK: UTILITIES – SANITARY SEWER RELOCATION

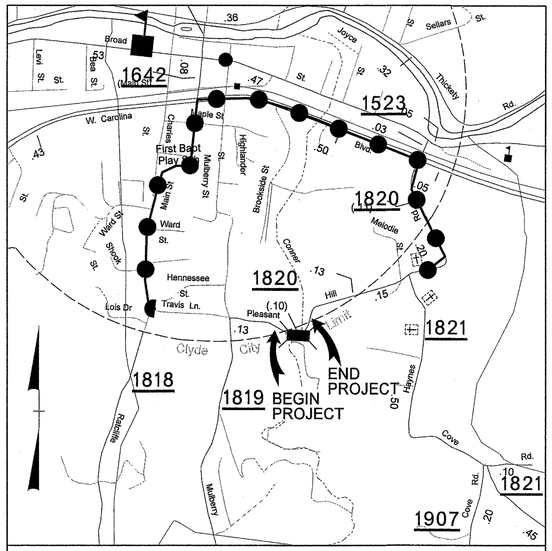

VICINITY MAP ***NTS***

OFF-SITE DETOUR

100% PLANS

NAD 83/NSRS 2007

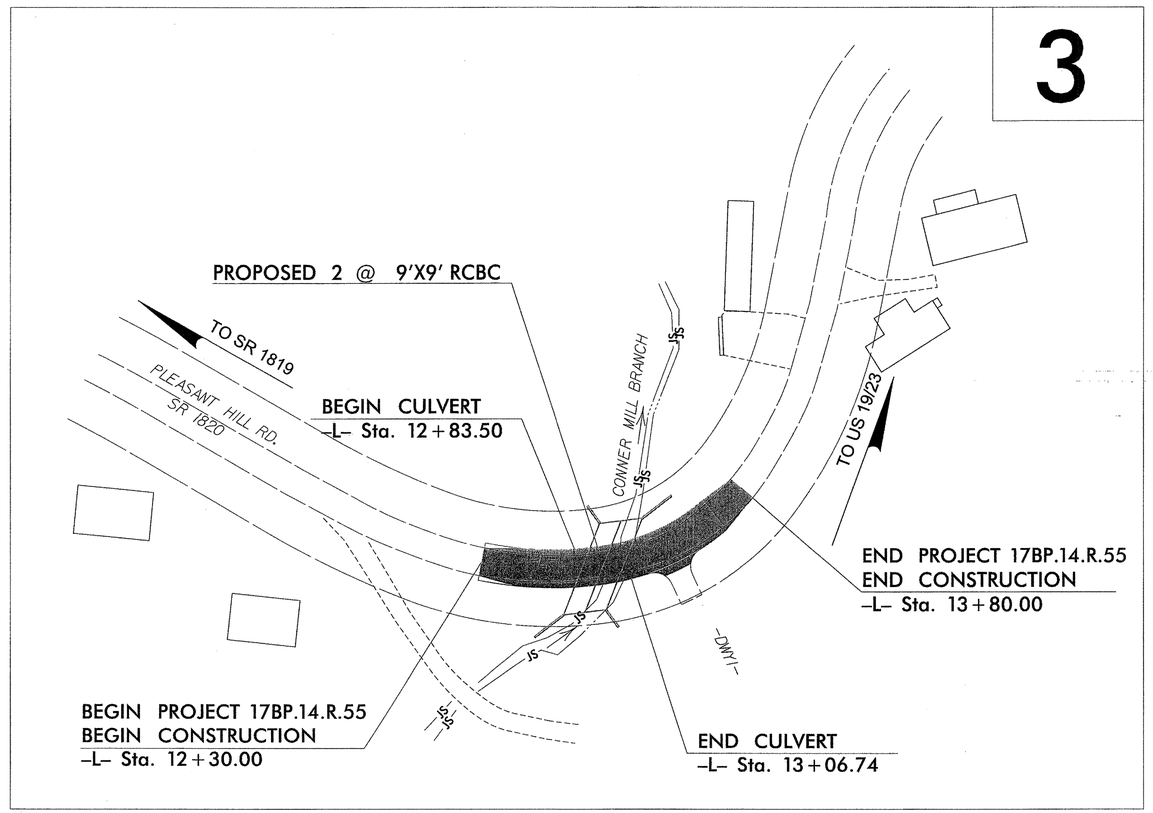

NCDOT CONTACT:
JOSH DEYTON, PE
HIGHWAY DIVISION 14
BRIDGE MANAGER
828-488-0902

CONTRACT: DN00180

GRAPHIC SCALES

20 10 0 20 40
PLANS

20 10 0 20 40
PROFILE (HORIZONTAL)

5 2.5 0 5 10
PROFILE (VERTICAL)

INDEX OF SHEETS

SHEET NO.	DESCRIPTION
UC-1	TITLE SHEET
UC-2	SYMBOLOGY SHEET
UC-3	UTILITY PLAN AND PROFILE SHEET

WATER AND SEWER OWNERS ON PROJECT

(1) SEWER –
TOWN OF CLYDE

Erich Ohliger
PHONE (828) 627-2566

SEAL

NORTH CAROLINA PROFESSIONAL SEAL 028912 ENGINEER ERIC M. TWEED

3-31-14

PLANS PREPARED BY:

CH ENGINEERING
3220 GLEN ROYAL RD. RALEIGH, NC 27617
TELE 919.788.0224 FAX 919.788.0232
NC LICENSE #P-0189

STATE OF NORTH CAROLINA DEPARTMENT OF TRANSPORTATION

PREPARED FOR THE OFFICE OF:
DIVISION OF HIGHWAYS
UTILITIES ENGINEERING SECTION

1591 MAIL SERVICES CENTER
RALEIGH NC 27699-1591
PHONE (919) 250-4128
FAX (919) 250-4119

Roger Worthington, P.E. ***UTILITIES SECTION ENGINEER***

Eric Tweed, P.E. ***UTILITIES PROJECT ENGINEER***

3/31/2014 11:34:57 AM
$FILEL$
$PENTBL$

STATE OF NORTH CAROLINA
DIVISION OF HIGHWAYS

CH ENGINEERING
3220 GLEN ROYAL RD. RALEIGH, NC 27617
TELE 919.788.0224 FAX 919.788.0232
NC LICENSE #P-0189

PROJECT REFERENCE NO.	SHEET NO.
17BP.14.R.55	UC-2
BRIDGE NO. 321	

UTILITIES PLAN SHEET SYMBOLS

PROPOSED WATER SYMBOLS

- Water Line (Sized as Shown)
- 11¼ Degree Bend
- 22½ Degree Bend
- 45 Degree Bend
- 90 Degree Bend
- Plug
- Tee
- Cross
- Reducer
- Gate Valve — GV
- Butterfly Valve — BV
- Tapping Valve — TGV
- Line Stop — LS
- Line Stop with Bypass — LS/BP
- Blow Off — BO
- Fire Hydrant — PFH
- Relocate Fire Hydrant — REH
- Remove Fire Hydrant — REM FH
- Water Meter — PWM
- Relocate Water Meter — RWM
- Remove Water Meter — REM WM
- Water Pump Station — PS(W)
- RPZ Backflow Preventer — PRPZ
- DCV Backflow Preventer — PBFP
- Relocate RPZ Backflow Preventer — RRPZ
- Relocate DCV Backflow Preventer — RBFP

PROPOSED SEWER SYMBOLS

- Gravity Sewer Line (Sized as Shown)
- Force Main Sewer Line (Sized as Shown)
- Manhole (Sized per Note)
- Sewer Pump Station — PS(SS)

PROPOSED MISCELLANOUS UTILITIES SYMBOLS

- Power Pole
- Telephone Pole
- Joint Use Pole
- Telephone Pedestal — TEL PED
- Utility Line by Others (Type as Shown)
- Trenchless Installation
- Encasement by Open Cut
- Encasement
- Thrust Block
- Air Release Valve — AR
- Utility Vault — UV
- Concrete Pier — CP
- Steel Pier — SP
- Plan Note — NOTE
- Pay Item Note — PAY ITEM

EXISTING UTILITIES SYMBOLS

- Power Pole
- Telephone Pole
- Joint Use Pole
- Utility Pole
- Utility Pole with Base
- H-Frame Pole
- Power Transmission Line Tower
- Water Manhole
- Power Manhole
- Telephone Manhole
- Sanitary Sewer Manhole
- Hand Hole for Cable
- Power Transformer
- Telephone Pedestal
- CATV Pedestal
- Gas Valve
- Gas Meter
- Located Miscellaneous Utility Object
- Abandoned According to Utility Records — AATUR
- End of Information — E.O.I.
- *Underground Power Line
- *Underground Telephone Cable
- *Underground Telephone Conduit
- *Underground Fiber Optics Telephone Cable
- *Underground TV Cable
- *Underground Fiber Optics TV Cable
- *Underground Gas Pipeline
- Aboveground Gas Pipeline — A/G Gas
- *Underground Water Line
- Aboveground Water Line — A/G Water
- *Underground Gravity Sanitary Sewer Line
- Aboveground Gravity Sanitary Sewer Line — A/G Sanitary Sewer
- *Underground SS Forced Main Line
- Underground Unknown Utility Line
- SUE Test Hole
- Water Meter
- Water Valve
- Fire Hydrant
- Sanitary Sewer Cleanout

*For Existing Utilities

- Utility Line Drawn from Record (Type as Shown)
- Designated Utility Line (Type as Shown)

REV: 2/1/2012

5/14/99
3/31/2014
Group: Bridges\430321 Haywood\Utilities\430321_SYM_UC-2.dgn
USER: PRAMAN

THE LOUIS BERGER GROUP, Inc.
1001 Wade Avenue, Suite 400
Raleigh, North Carolina 27605

PROJECT REFERENCE NO.	SHEET NO.
	UC-3
ROADWAY DESIGN ENGINEER	UTILITIES ENGINEER

CH ENGINEERING
3220 GLEN ROYAL RD. RALEIGH, NC 27617
TELE 919.788.0224 FAX 919.788.0232
NC LICENSE #P-0189

NAD 83/NSRS 2007

NORTH CAROLINA PROFESSIONAL SEAL 028912 ENGINEER ERIC M. TREED
7-31-14

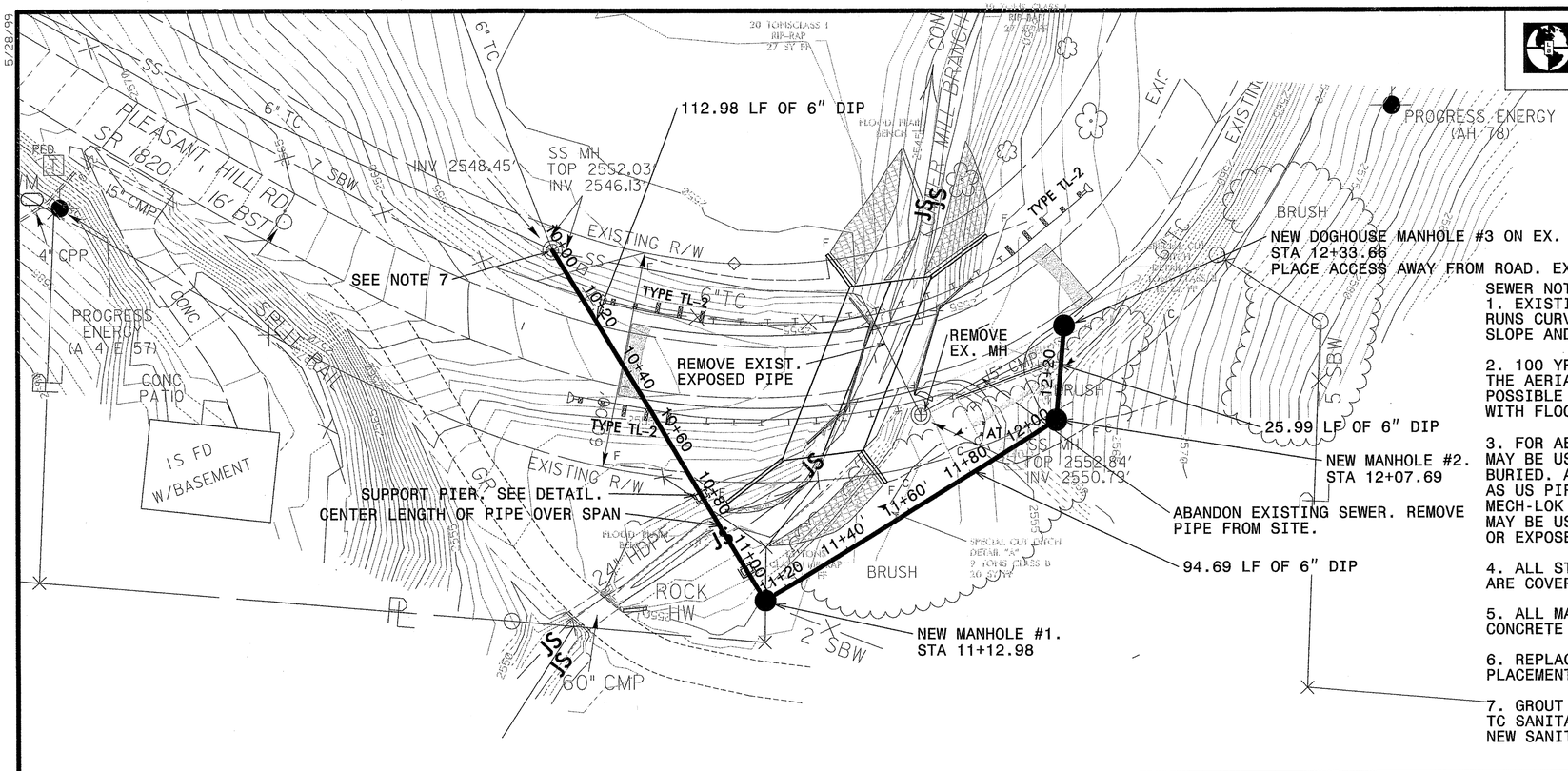

SEWER NOTES:

1. EXISTING SEWER TO BE INTERCEPTED RUNS CURVED WITH ROAD AND HAS UNKNOWN SLOPE AND DEPTH.

2. 100 YR FLOOD ELEVATION IS 2553.9 AND THE AERIAL LINE IS TO BE SET AS HIGH AS POSSIBLE TO REDUCE RISK OF CONTACT WITH FLOOD WATERS.

3. FOR AERIAL CROSSING: FLANGED PIPE MAY BE USED UNLESS JOINT WILL BE BURIED. A RIGID RESTRAINED JOINT SUCH AS US PIPE MJ HARNESS LOK, GRIFFIN MECH-LOK OR AMERICAN MJ COUPLED JOINT MAY BE USED IF JOINTS EITHER ARE BURIED OR EXPOSED.

4. ALL STREAM CROSSINGS 401-404 PERMITS ARE COVERED UNDER BRIDGE RELOCATION.

5. ALL MANHOLES SHALL BE 4' DIA PRECAST CONCRETE UNLESS NOTED OTHERWISE.

6. REPLACE ANY EX. PIPE DAMAGED DURING PLACEMENT OF DOGHOUSE MANHOLE

7. GROUT EX. INVERT IN, REMOVE EX. 6" TC SANITARY SEWER UPON COMPLETION OF NEW SANITARY SEWER LINE.

GRAPHIC SCALES

PLANS: 20 10 0 20 40
PROFILE (HORIZONTAL): 20 10 0 20 40
PROFILE (VERTICAL): 5 2.5 0 5 10

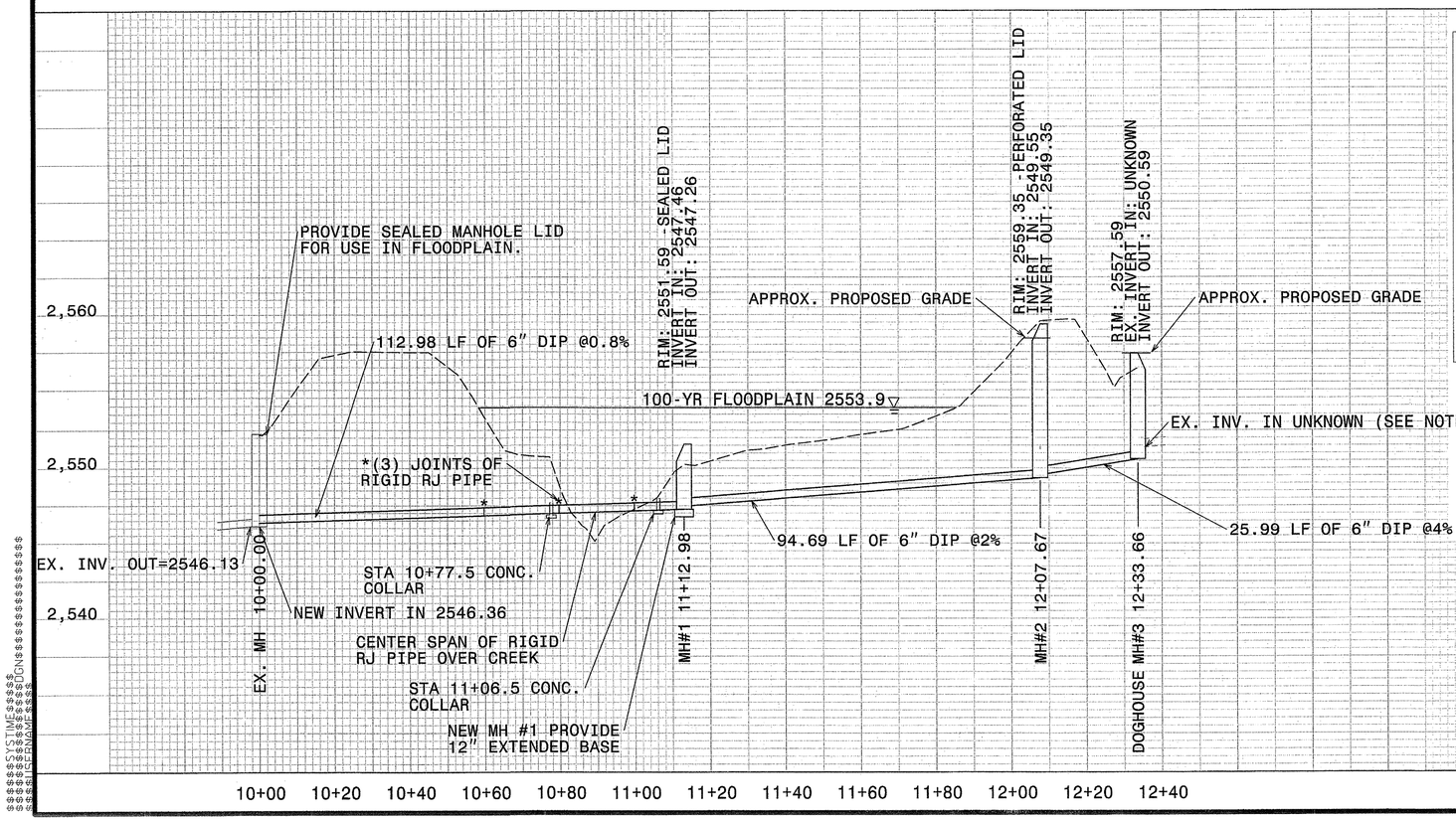

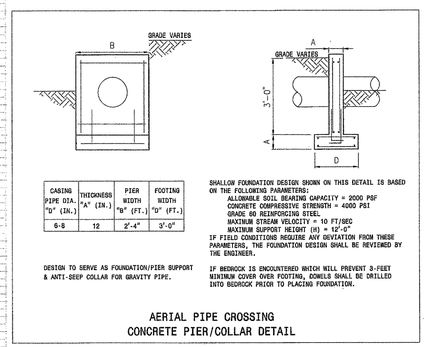

CASING PIPE DIA. "D" (IN.)	THICKNESS "A" (IN.)	PIER WIDTH "B" (FT.)	FOOTING WIDTH "D" (FT.)
6-8	12	2'-4"	3'-0"

DESIGN TO SERVE AS FOUNDATION/PIER SUPPORT & ANTI-SEEP COLLAR FOR GRAVITY PIPE.

SHALLOW FOUNDATION DESIGN SHOWN ON THIS DETAIL IS BASED ON THE FOLLOWING PARAMETERS:
ALLOWABLE SOIL BEARING CAPACITY = 2000 PSF
CONCRETE COMPRESSIVE STRENGTH = 4000 PSI
GRADE 60 REINFORCING STEEL
MAXIMUM STREAM VELOCITY = 10 FT/SEC
MAXIMUM SUPPORT HEIGHT (H) = 12'-0"
IF FIELD CONDITIONS REQUIRE ANY DEVIATION FROM THESE PARAMETERS, THE FOUNDATION DESIGN SHALL BE REVIEWED BY THE ENGINEER.

IF BEDROCK IS ENCOUNTERED WHICH WILL PREVENT 3-FEET MINIMUM COVER OVER FOOTING, DOWELS SHALL BE DRILLED INTO BEDROCK PRIOR TO PLACING FOUNDATION.

AERIAL PIPE CROSSING
CONCRETE PIER/COLLAR DETAIL

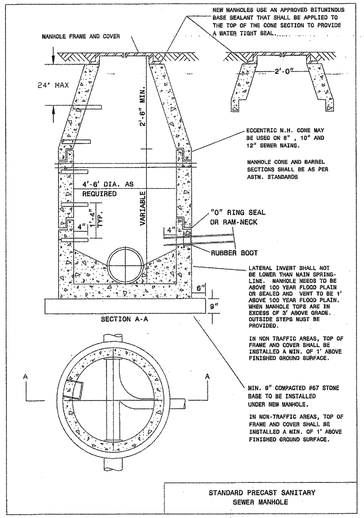

STANDARD PRECAST SANITARY SEWER MANHOLE

5/28/99

$$$$SYSTIME$$$$ $$$$DGN$$$$ $$$$USERNAME$$$$

17BP.14.R.55
CROSS SECTIONS

INDEX OF SHEETS

TITLE	STATION	SHEET NO.
CROSS-SECTION INDEX		X-1
CROSS-SECTION SUMMARY		X-1A
-L- CROSS-SECTIONS	12+40 - 13+80	X-2 THROUGH X-4
-DWY1- CROSS-SECTIONS	10+10 - 10+30	X-5

NOTE: Approximate quantities only. Unclassified Excavation, Fine Grading, and Clearing and Grubbing will be paid for at the contract lump sum price for "Grading".

8/23/99

4/14/2014
10:42:06 AM
G:\OR_Projects\OR1100 - NCDOT Group W\430321\Roadway\XSC\430321_RDY_XPL_001.dgn

PROJ. REFERENCE NO.	SHEET NO.
17BP.14.R.55	1-A

STATE OF NORTH CAROLINA
DIVISION OF HIGHWAYS

NOTE: EMBANKMENT COLUMN INCLUDES BACKFILL FOR UNDERCUT

CROSS-SECTION SUMMARY

Station L	Uncl. Exc. (cu. yd.)	Embt (cu. yd.)
12+30.00	0	0
12+40.00	1	20
12+50.00	1	18
12+60.00	1	17
12+70.00	1	16
12+80.00	2	17
12+90.00	3	28
13+00.00	3	54
13+10.00	1	69
13+20.00	0	53
13+30.00	0	29
13+40.00	1	14
13+50.00	1	5
13+60.00	1	3

Station Dwy1	Uncl. Exc. (cu. yd.)	Embt (cu. yd.)
10+10.00	0	0
10+20.00	5	7
10+30.00	6	7

0 2.5 5	PROJ. REFERENCE NO.	SHEET NO.
	17BP.14.R.55	X-2

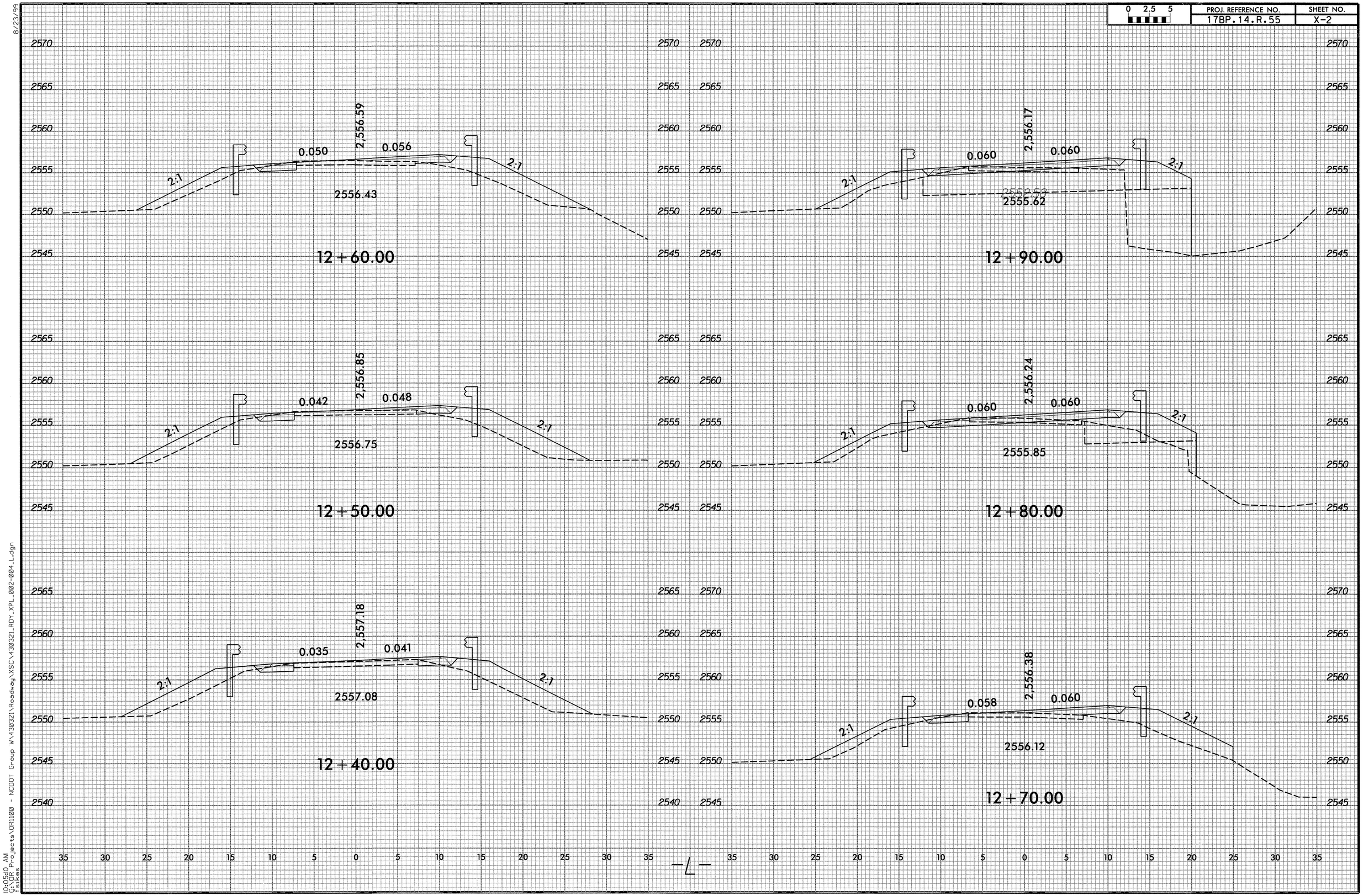

8/23/99

10:05:10 AM
G:\DR Projects\DR11100 - NCDOT Group W\430321\Roadway\XSC\430321_RDY_XPL_002-004_L.dgn
Fisikes

0 2.5 5	PROJ. REFERENCE NO.	SHEET NO.
	17BP.14.R.55	X-3

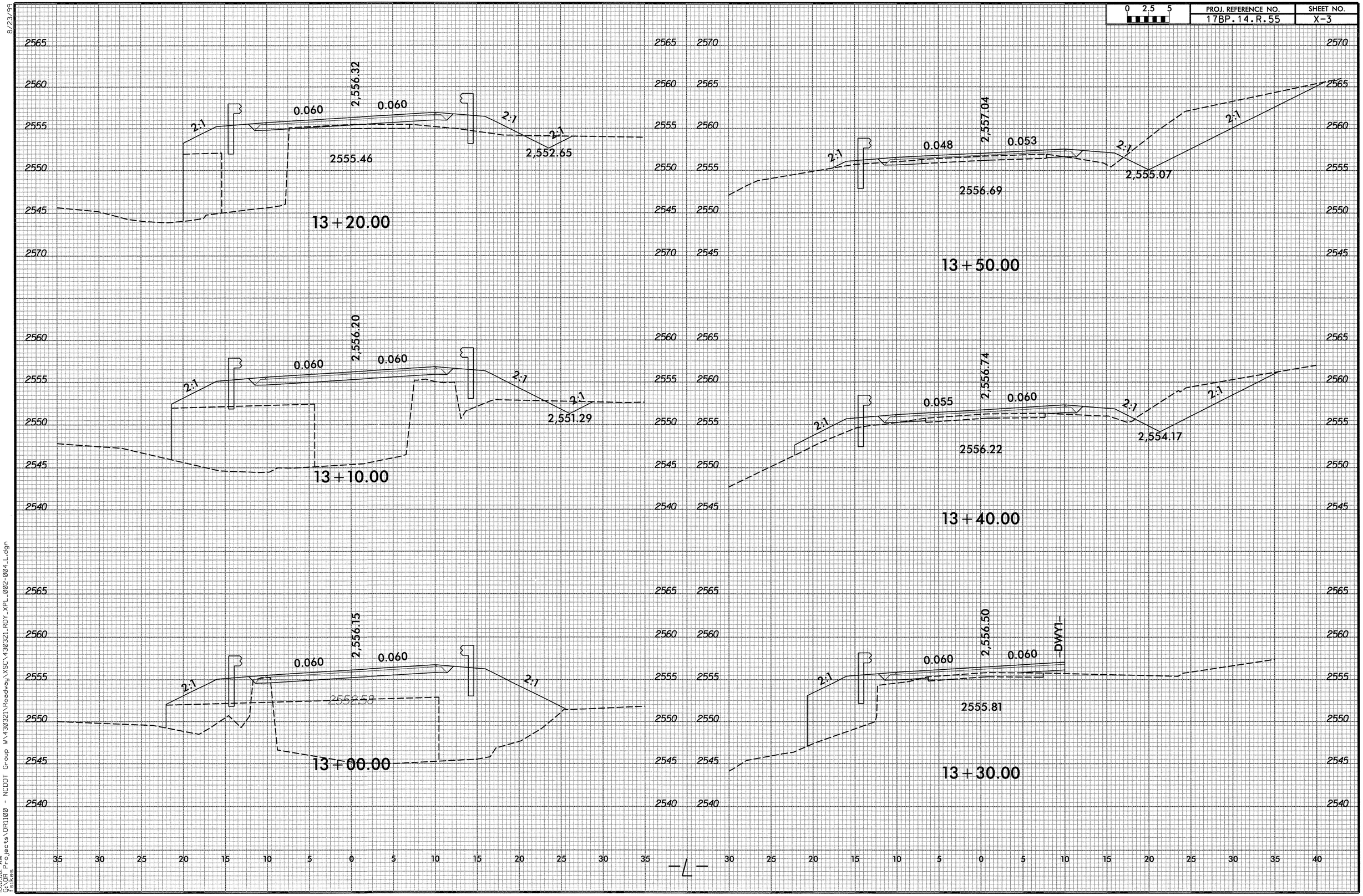

8/23/99

10:05:12 AM
Q:\DR Projects\DR1100 - NCDOT Group W\430321\Roadway\XSC\430321_RDY_XPL_002-004_L.dgn
Tskes

0 2.5 5	PROJ. REFERENCE NO.	SHEET NO.
	17BP.14.R.55	X-4

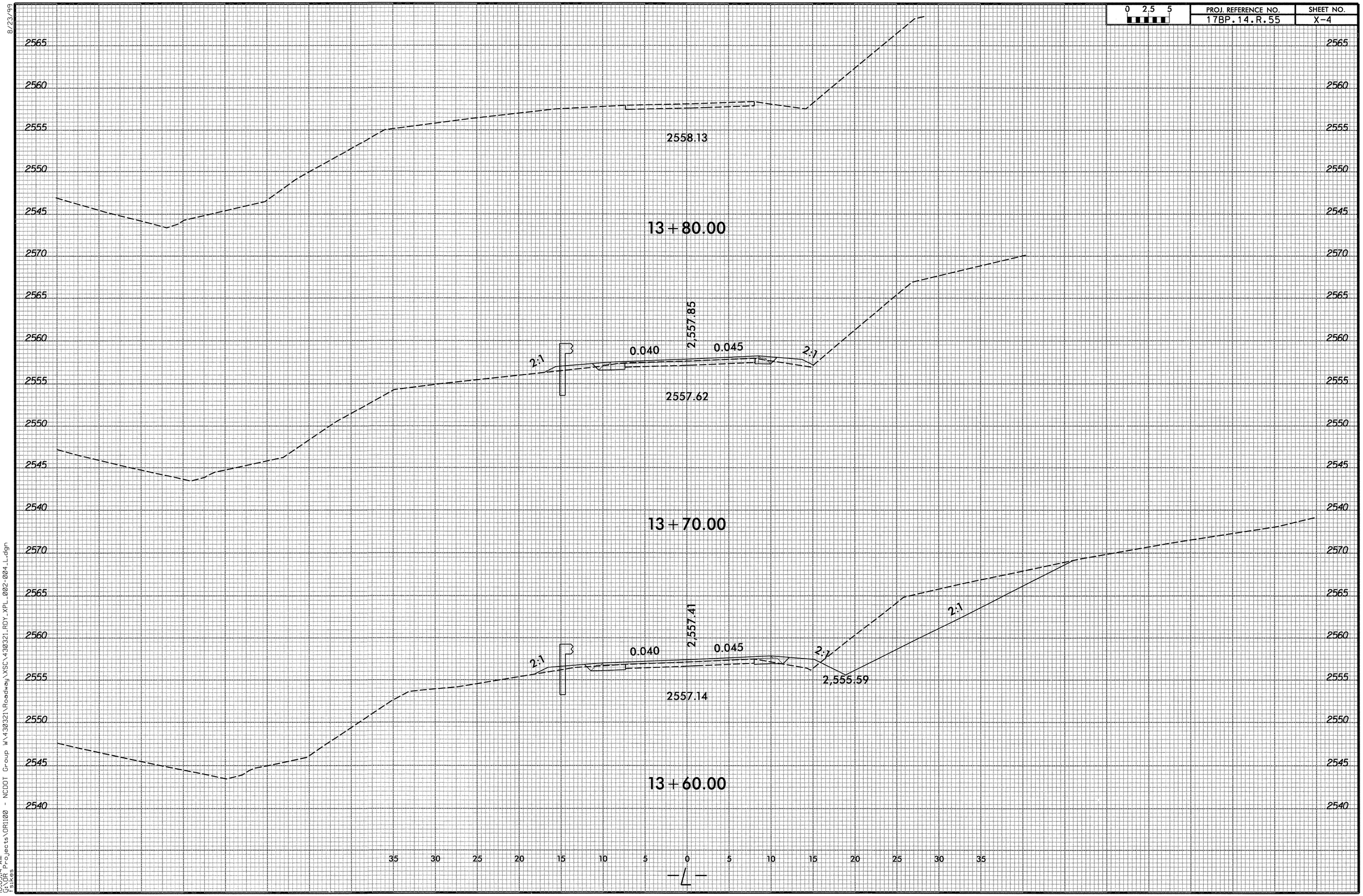

8/23/99

10:05:14 AM
C:\DR Projects\DR1100 - NCDOT Group W\430321\Roadway\XSC\430321_RDY_XPL_002-004_L.dgn
Fsikes

0 2.5 5	PROJ. REFERENCE NO.	SHEET NO.
	17BP.14.R.55	X-5

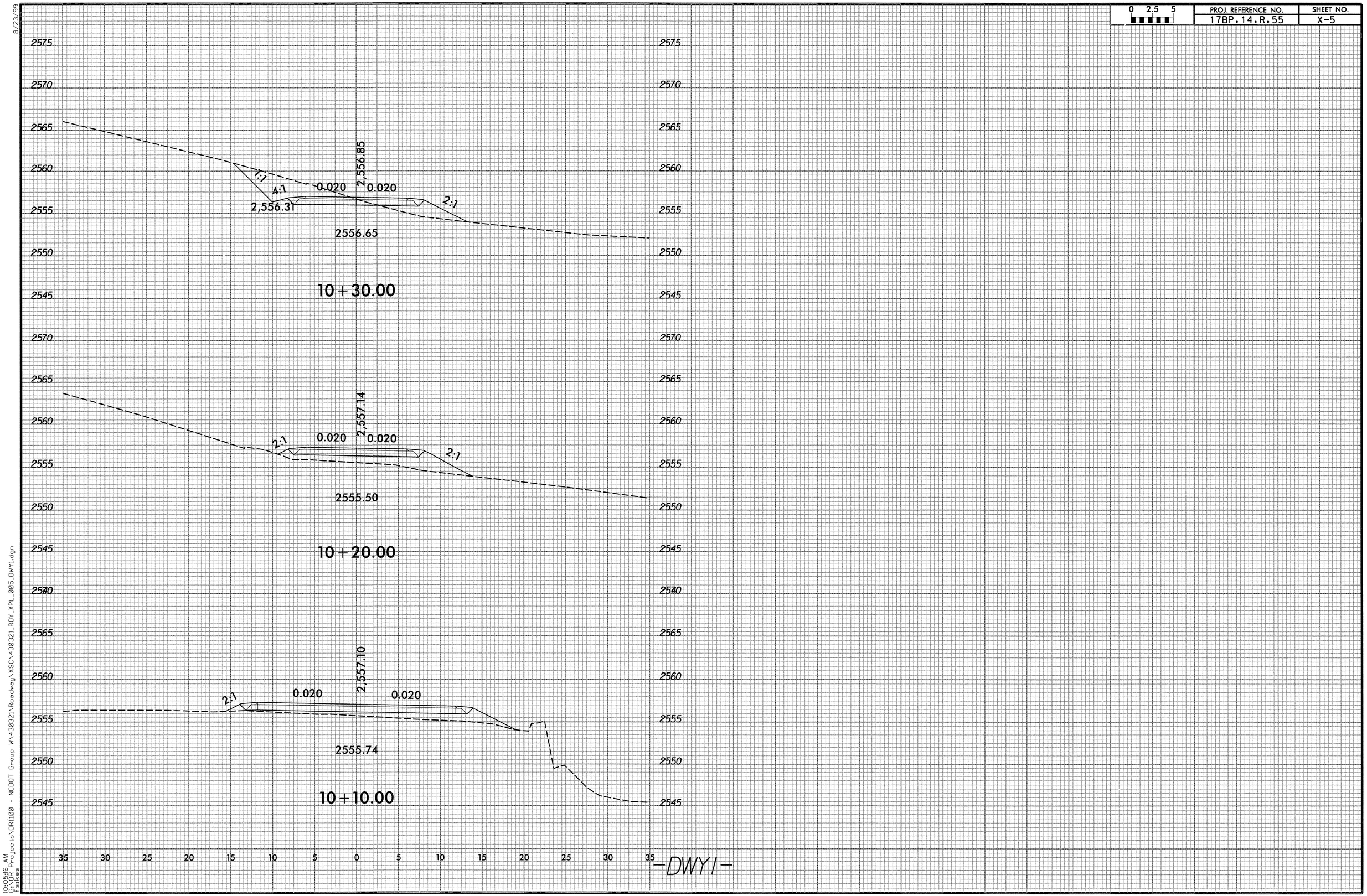

8/23/99

10:05:16 AM
G:\DR Projects\DR1100 - NCDOT Group W\430321\Roadway\XSC\430321_RDY_XPL_005_DWY1.dgn
Pstokes

B.M.#1 -BL- STA. 8+44..01 2.49 RT. ELEV. = 2549.04'

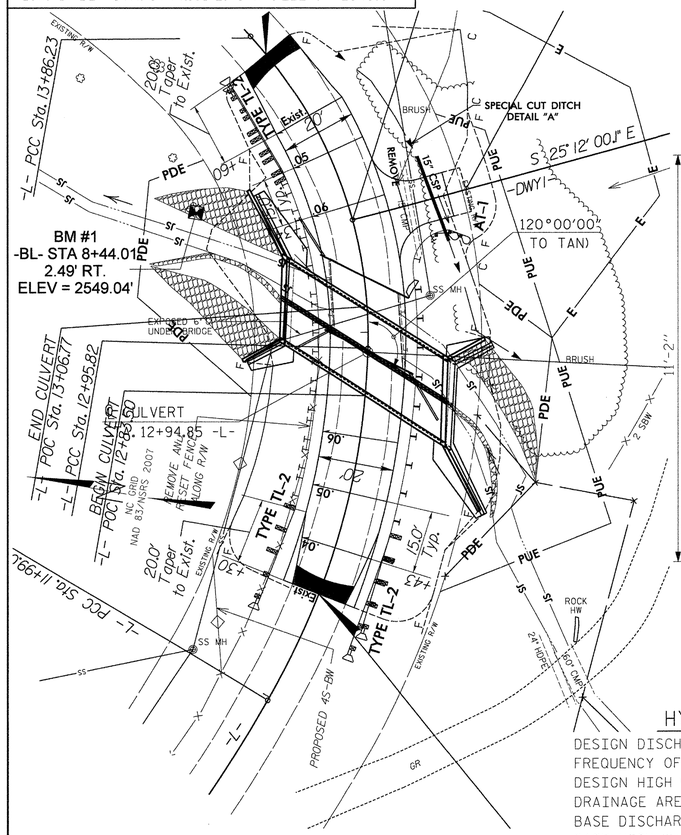

LOCATION SKETCH

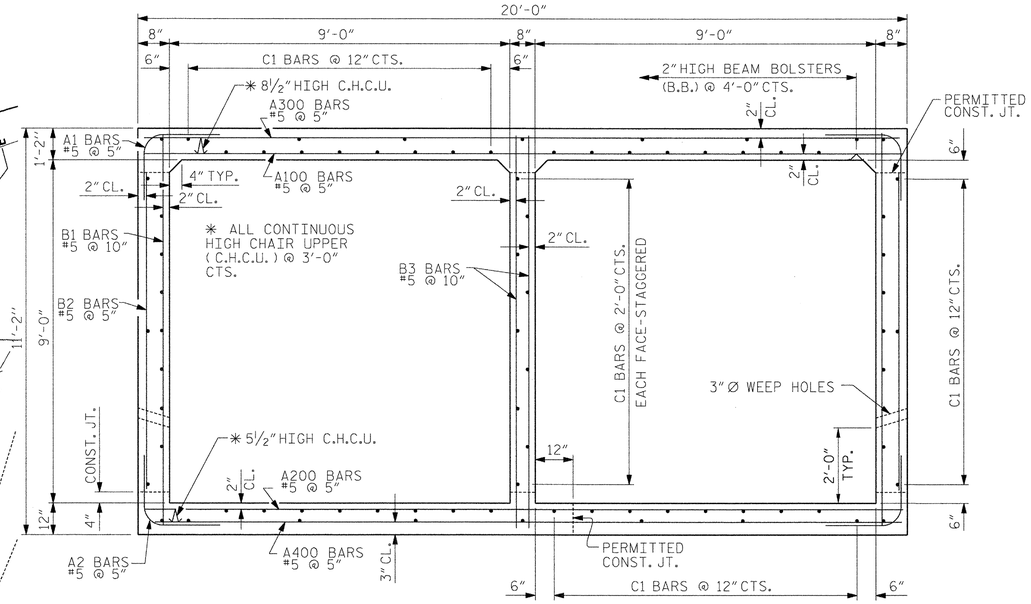

RIGHT ANGLE SECTION OF BARREL

THERE ARE 79 "C" BARS IN SECTION OF BARREL.

HYDRAULIC DATA

DESIGN DISCHARGE	= 610 C.F.S.
FREQUENCY OF DESIGN FLOOD	= 25 YEARS
DESIGN HIGH WATER ELEVATION	= 2549.7'
DRAINAGE AREA	= 1.8 SQ. MI.
BASE DISCHARGE (Q100)	= 880 C.F.S.
BASE HIGH WATER ELEVATION	= 2551.3'

OVERTOPPING FLOOD DATA

OVERTOPPING DISCHARGE	= 1431 C.F.S.
FREQUENCY OF OVERTOPPING FLOOD	= 500 YEARS
OVERTOPPING FLOOD ELEVATION	= 2556.15'

OVERTOPPING WILL OCCUR OVER THE ROAD AT THE RBC

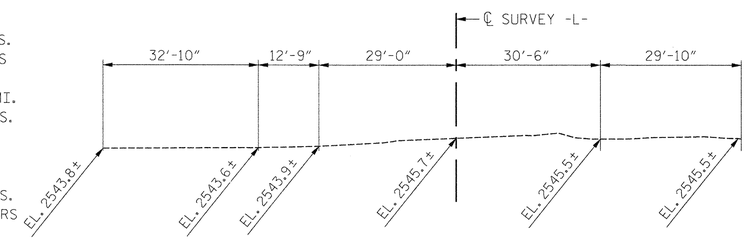

PROFILE ALONG ℄ CULVERT

TOTAL STRUCTURE QUANTITIES

CLASS A CONCRETE		
BARREL @ 2.2 CY/FT	113.3	C.Y.
WING ETC.	39.2	C.Y.
SILLS & BAFFLES	2.8	
TOTAL	155.3	C.Y.
REINFORCING STEEL		
BARREL	20,778	LBS.
WINGS	2,148	LBS.
SILLS & BAFFLES	106	LBS.
TOTAL	23,032	LBS.
FOUNDATION COND. MAT'L.		87 TONS
CULVERT EXCAVATION		LUMP SUM
REMOVAL OF EXISTING STRUCTURE		LUMP SUM
RIP RAP, CLASS B		56 TONS

BAR TYPES

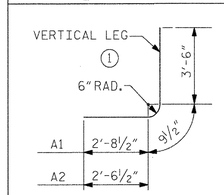

SPLICE CHART	
#4C1	1'-11"
#5B1	1'-9"

BILL OF MATERIAL

BAR	NO	SIZE	TYPE	LENGTH	WEIGHT	BAR	NO	SIZE	TYPE	LENGTH	WEIGHT
A1	248	# 5	1	7'-0"	1811	A300	96	# 5	STR	19'-7"	1961
						A301	4	# 5	STR	18'-2"	76
A2	248	# 5	1	6'-10"	1768	A302	4	# 5	STR	16'-8"	70
						A303	4	# 5	STR	15'-3"	64
A100	96	# 5	STR	19'-7"	1961	A304	4	# 5	STR	13'-9"	57
A101	4	# 5	STR	18'-2"	76	A305	4	# 5	STR	12'-3"	51
A102	4	# 5	STR	16'-8"	70	A306	4	# 5	STR	10'-10"	45
A103	4	# 5	STR	15'-3"	64	A307	4	# 5	STR	9'-4"	39
A104	4	# 5	STR	13'-9"	57	A308	4	# 5	STR	7'-11"	33
A105	4	# 5	STR	12'-3"	51	A309	4	# 5	STR	6'-5"	27
A106	4	# 5	STR	10'-10"	45	A310	4	# 5	STR	5'-0"	21
A107	4	# 5	STR	9'-4"	39	A311	4	# 5	STR	3'-6"	15
A108	4	# 5	STR	7'-11"	33	A312	4	# 5	STR	2'-2"	9
A109	4	# 5	STR	6'-5"	27						
A110	4	# 5	STR	5'-0"	21	A400	96	# 5	STR	19'-7"	1961
A111	4	# 5	STR	3'-6"	15	A401	4	# 5	STR	18'-2'	76
A112	4	# 5	STR	2'-2"	9	A402	4	# 5	STR	16'-8"	70
						A403	4	# 5	STR	15'-3"	64
A200	96	# 5	STR	19'-7"	1961	A404	4	# 5	STR	13'-9"	57
A201	4	# 5	STR	18'-2'	76	A405	4	# 5	STR	12'-3"	51
A202	4	# 5	STR	16'-8"	70	A406	4	# 5	STR	10'-10"	45
A203	4	# 5	STR	15'-3"	64	A407	4	# 5	STR	9'-4"	39
A204	4	# 5	STR	13'-9"	57	A408	4	# 5	STR	7'-11"	33
A205	4	# 5	STR	12'-3"	51	A409	4	# 5	STR	6'-5"	27
A206	4	# 5	STR	10'-10"	45	A410	4	# 5	STR	5'-0"	21
A207	4	# 5	STR	9'-4"	39	A411	4	# 5	STR	3'-6"	15
A208	4	# 5	STR	7'-11"	33	A412	4	# 5	STR	2'-2"	9
A209	4	# 5	STR	6'-5"	27						
A210	4	# 5	STR	5'-0"	21	B1	62	# 5	STR	10'-9"	695
A211	4	# 5	STR	3'-6"	15	B2	248	# 5	STR	8'-6"	2199
A212	4	# 5	STR	2'-2"	9	B3	62	# 5	STR	10'-9"	695
						C1	158	# 4	STR	26'-9"	2823
						G1	8	# 5	STR	22'-8"	189
						S2	12	# 8	STR	22'-8"	726

NOTES

ASSUMED LIVE LOAD ----------HL-93 OR ALTERNATE LOADING.

DESIGN FILL---------- 2.5'.

FOR OTHER DESIGN DATA AND NOTES, SEE STANDARD NOTES SHEET.

3" Ø WEEP HOLES INDICATED TO BE IN ACCORDANCE WITH THE SPECIFICATIONS.

CONCRETE IN CULVERTS TO BE POURED IN THE FOLLOWING ORDER:

1. WING FOOTINGS AND FLOOR SLAB INCLUDING 4" OF ALL VERTICAL WALLS.

   THE REMAINING PORTIONS OF THE WALLS AND WINGS FULL HEIGHT FOLLOWED BY ROOF SLAB AND HEADWALLS.

THE RESIDENT ENGINEER SHALL CHECK THE LENGTH OF CULVERT BEFORE STAKING IT OUT TO MAKE CERTAIN THAT IT WILL PROPERLY TAKE CARE OF THE FILL.

THIS BARREL STANDARD TO BE USED ONLY ON CULVERT ON 120° SKEW AND TO BE USED WITH STANDARD WING SHEET WITH THE SAME SKEW AND VERTICAL CLEARANCE.

DIMENSIONS FOR WING LAYOUT AS WELL AS ADDITIONAL REINFORCING STEEL EMBEDDED IN BARREL ARE SHOWN ON WING SHEET.

STEEL IN THE BOTTOM SLAB MAY BE SPLICED AT THE PERMITTED CONSTRUCTION JOINT AT THE CONTRACTOR'S OPTION. EXTRA WEIGHT OF STEEL DUE TO THE SPLICES SHALL BE PAID FOR BY CONTRACTOR.

AT THE CONTRACTOR'S OPTION, HE MAY SPLICE THE VERTICAL REINFORCING STEEL IN THE INTERIOR FACE OF EXTERIOR WALL AND BOTH FACES OF INTERIOR WALLS ABOVE LOWER WALL CONSTRUCTION JOINT. THE SPLICE LENGTH SHALL BE AS PROVIDED IN THE SPLICE LENGTH CHART SHOWN ON THE PLANS. EXTRA WEIGHT OF STEEL DUE TO THE SPLICES SHALL BE PAID FOR BY THE CONTRACTOR.

AT THE CONTRACTOR'S OPTION HE MAY SUBMIT, TO THE ENGINEER FOR APPROVAL, DESIGN AND DETAIL DRAWINGS FOR A PRECAST REINFORCED CONCRETE BOX CULVERT IN LIEU OF THE CAST-IN-PLACE CULVERT SHOWN ON THE PLANS. THE DESIGN SHALL PROVIDE THE SAME SIZE AND NUMBER OF BARRELS AS USED ON THE CAST-IN-PLACE DESIGN. FOR PRECAST REINFORCED CONCRETE BOX CULVERT, SEE SPECIAL PROVISIONS.

A 3 FOOT STRIP OF FILTER FABRIC SHALL BE ATTACHED TO THE FILL FACE OF THE WING COVERING THE ENTIRE LENGTH OF THE EXPANSION JOINT.

FOR CULVERT DIVERSION DETAILS AND PAY ITEM, SEE EROSION CONTROL PLANS.

THE EXISTING STRUCTURE CONSISTING OF TIMBER FLOOR ON I-BEAMS ON TIMBER CAPS WITH TIMBER POST AND SILLS SHALL BE REMOVED. THE EXISTING BRIDGE IS PRESENTLY POSTED BELOW THE LEGAL LOAD LIMIT. SHOULD THE STRUCTURAL INTEGRITY OF THE BRIDGE FURTHER DETERIORATE, THIS LOAD LIMITATION MAY BE REDUCED AS FOUND NECESSARY DURING THE LIFE OF THE PROJECT.

REMOVAL OF THE EXISTING BRIDGE SHALL BE PERFORMED SO AS NOT TO ALLOW DEBRIS TO FALL INTO THE WATER. THE CONTRACTOR SHALL REMOVE THE BRIDGE AND SUBMIT PLANS FOR DEMOLITION IN ACCORDANCE WITH ARTICLE 402-2 OF THE STANDARD SPECIFICATIONS.

IN AS MUCH AS THE PAINT SYSTEM ON THE EXISTING STRUCTURAL STEEL CONTAINS LEAD, THE CONTRACTOR'S ATTENTION IS DIRECTED TO ARTICLE 107-1 OF THE STANDARD SPECIFICATIONS. ANY COSTS RESULTING FROM COMPLIANCE WITH APPLICABLE STATE OR FEDERAL REGULATIONS PERTAINING TO HANDLING OF MATERIALS CONTAINING LEAD BASED PAINT SHALL BE INCLUDED IN THE BID PRICE FOR "REMOVAL OF EXISTING STRUCTURE AT STATION 13+22.20 -L-."

FOR SUBMITTAL OF WORKING DRAWINGS, SEE SPECIAL PROVISIONS.

FOR FALSEWORK AND FORMWORK, SEE SPECIAL PROVISIONS.

FOR CRANE SAFETY, SEE SPECIAL PROVISIONS.

FOR GROUT FOR STRUCTURES, SEE SPECIAL PROVISIONS.

FOR UTILITY INFORMATION, SEE UTILITY PLANS.

FOUNDATION NOTES

SEE SECTION 414 OF THE STANDARD SPECIFICATIONS FOR CULVERT EXCAVATION AND BACKFILLING.

EXCAVATE AT LEAST 1 FOOT BELOW CULVERTS AND FOOTINGS AND REPLACE WITH COMPACTED FOUNDATIONCONDITIONING MATERIAL.

ISOLATED AREAS WITH WEAK OR SOFT SUBGRADE MATERIALS MAY REQUIRE OVEREXCAVATION.

FOUNDATION CONDITIONING MATERIAL SHALL BE CLASS VI SELECT MATERIAL DESCRIBED IN SECTION 1016 OF THE STANDARD SPECIFICATIONS.

WING WALL BACKFILL SHALL BE CLASS II OR BETTER AS SPECIFIED IN SECTION 1016 OF THE STANDARD SPECIFICATIONS.

NORTH CAROLINA PROFESSIONAL SEAL 14047 ENGINEER STEPHEN D. COOK
4/11/14

PROJECT NO. 17BP.14.R.55
HAYWOOD COUNTY
STATION: 12+94.85 -L-

SHEET 1 OF 6 REPLACES BRIDGE #430321

STATE OF NORTH CAROLINA
DEPARTMENT OF TRANSPORTATION
RALEIGH

BARREL STANDARD

DOUBLE 9 FT. x 9 FT. CONCRETE BOX CULVERT 120° SKEW

AUGUST 1989

THE LOUIS BERGER GROUP, Inc.
1001 Wade Avenue, Suite 400
Raleigh, NC 27605-3322

REVISIONS						SHEET NO.
NO.	BY:	DATE:	NO.	BY:	DATE:	C-1
1			3			6
2			4			

ASSEMBLED BY : R. KNIGHT/J. MYA DATE : APR. 2012
CHECKED BY : S. COOK DATE : JULY 2012
DRAWN BY : B.M. MEYERS DATE : AUG. 1989
CHECKED BY : A.R. BISSETTE DATE : AUG. 1989

SPECIAL STANDARD

STD. NO. CB32A

G:\OR Projects\OR1100 - NCDOT Group W\430321\Structures\430321_RCBC_01.dgn
CKE_R2514B_PDF_half.pltcfg(R2514B_str.tbl
4/11/2014
ADDED 11-90

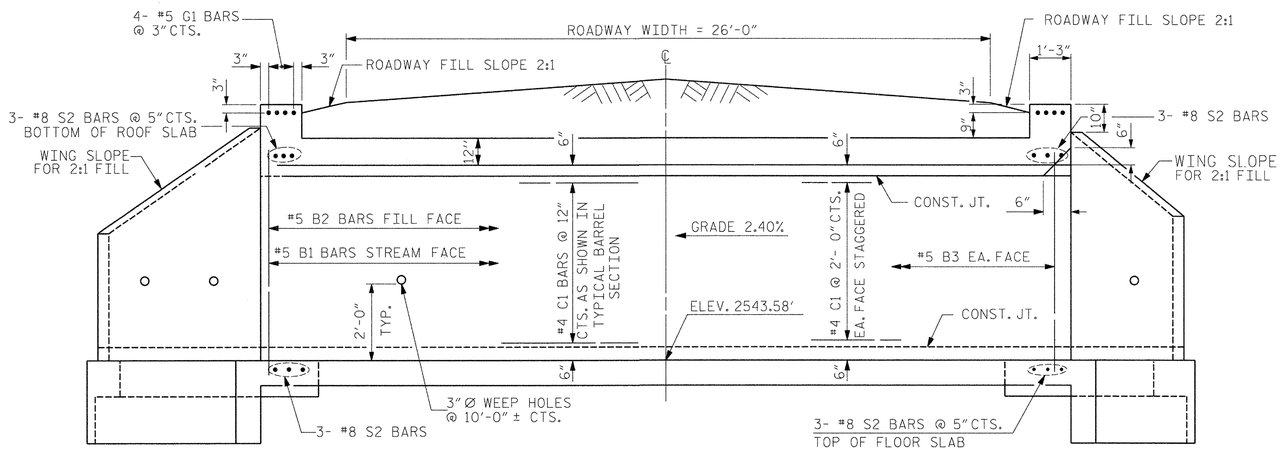

CULVERT SECTION NORMAL TO ROADWAY

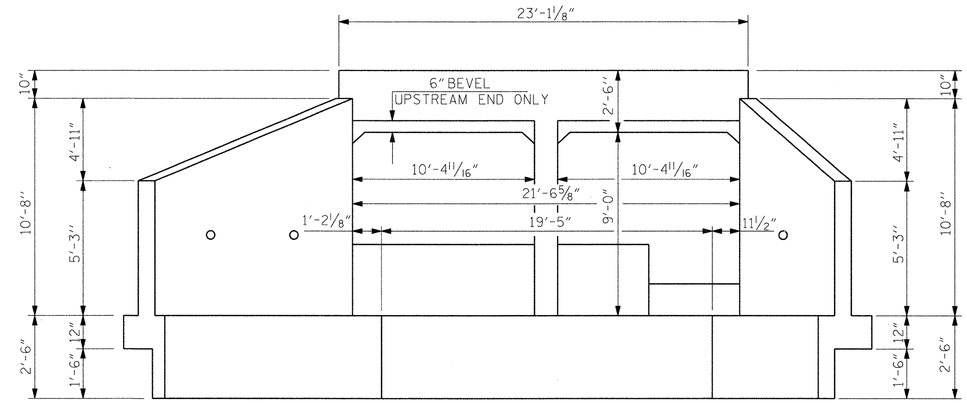

INLET END ELEVATION NORMAL TO SKEW

FOR SILL DETAILS, SEE SHEET 3 OF 6.

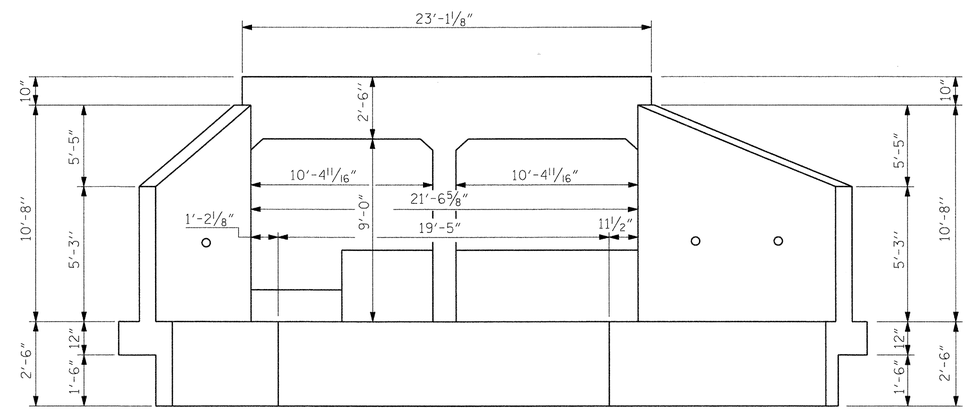

OUTLET END ELEVATION NORMAL TO SKEW

FOR SILL DETAILS, SEE SHEET 3 OF 6.

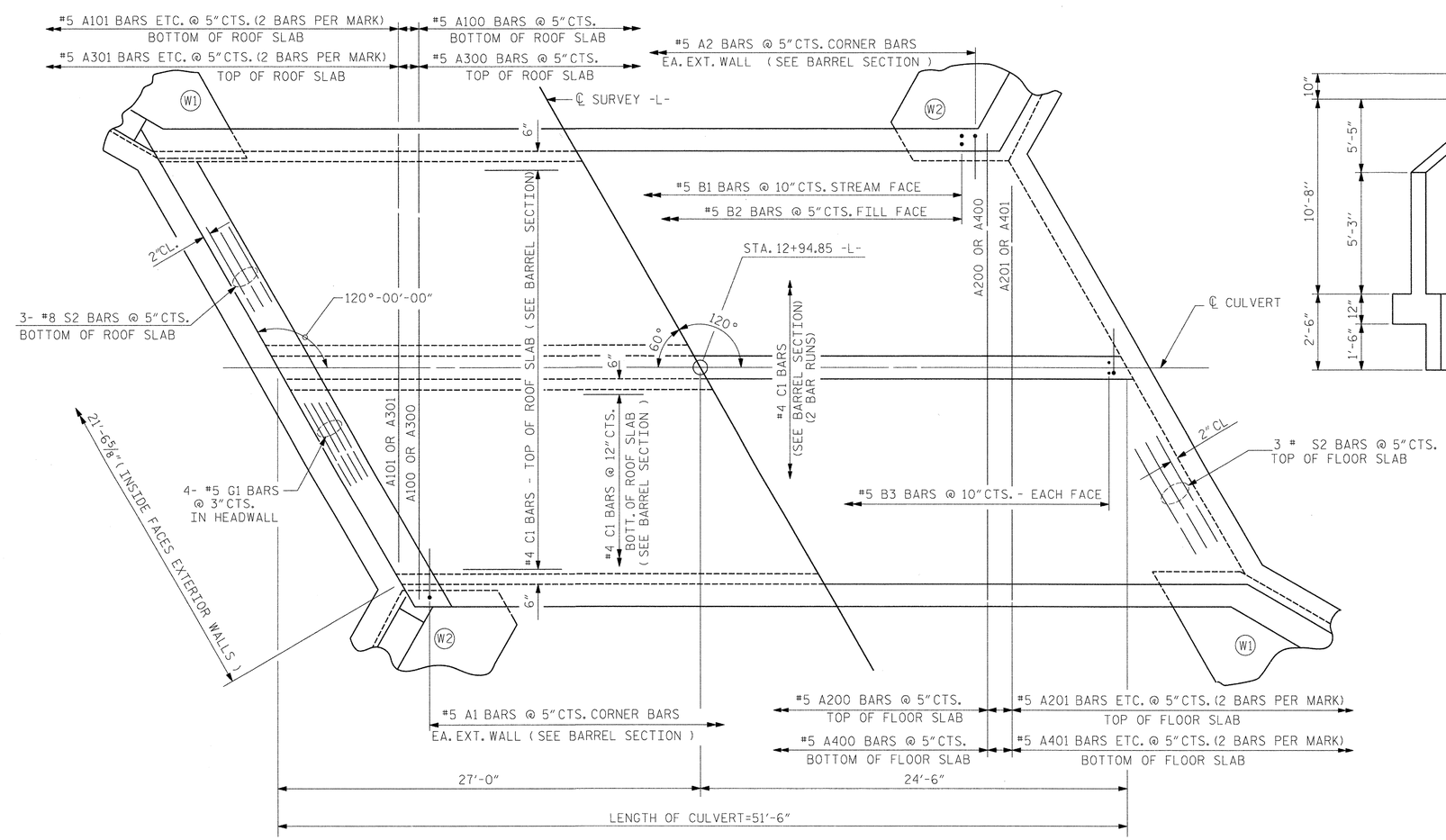

PART PLAN - ROOF SLAB

PART PLAN - FLOOR SLAB

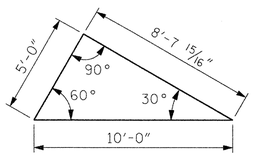

SKEW TRIANGLE

PROJECT NO. 17BP.14.R.55

HAYWOOD COUNTY

STATION: 12+94.85 -L-

SHEET 2 OF 6

STATE OF NORTH CAROLINA
DEPARTMENT OF TRANSPORTATION
RALEIGH

BARREL STANDARD

DOUBLE 9 FT. x 9 FT.
CONCRETE BOX CULVERT
120° SKEW

1971

NORTH CAROLINA PROFESSIONAL SEAL 14047 ENGINEER STEPHEN D. COOK 4/11/14

THE LOUIS BERGER GROUP, Inc.
1001 Wade Avenue, Suite 400
Raleigh, NC 27605-3322

REVISIONS						SHEET NO.
NO.	BY:	DATE:	NO.	BY:	DATE:	C-2
1	SDC		3			
2			4			6

ASSEMBLED BY : R. KNIGHT DATE : APR. 2012	CHECKED BY : S. COOK DATE : APR. 2012	SPECIAL
DRAWN BY : W.BRYAN STALEY II DATE : NOV.5,1971	CHECKED BY : JOEL A. JOHNSON DATE : NOV.13,1971	STANDARD

REVISED 11-19-99 BY M.M. CHECKED BY R.W.W.
REVISED 8-28-92 BY E.L.R. CHECKED BY G.R.P.
REDRAWN 8/1990 BY S.A.T., CHECKED BY E.L.R.

G:\OR Projects\OR1100 - NCDOT Group W\43032I\Structures\430321_RCBC_02.dgn
CKE_R2514B_PDF_half.pltcfg R2514B_str.tbl
4/11/2014

STD. NO. CB332

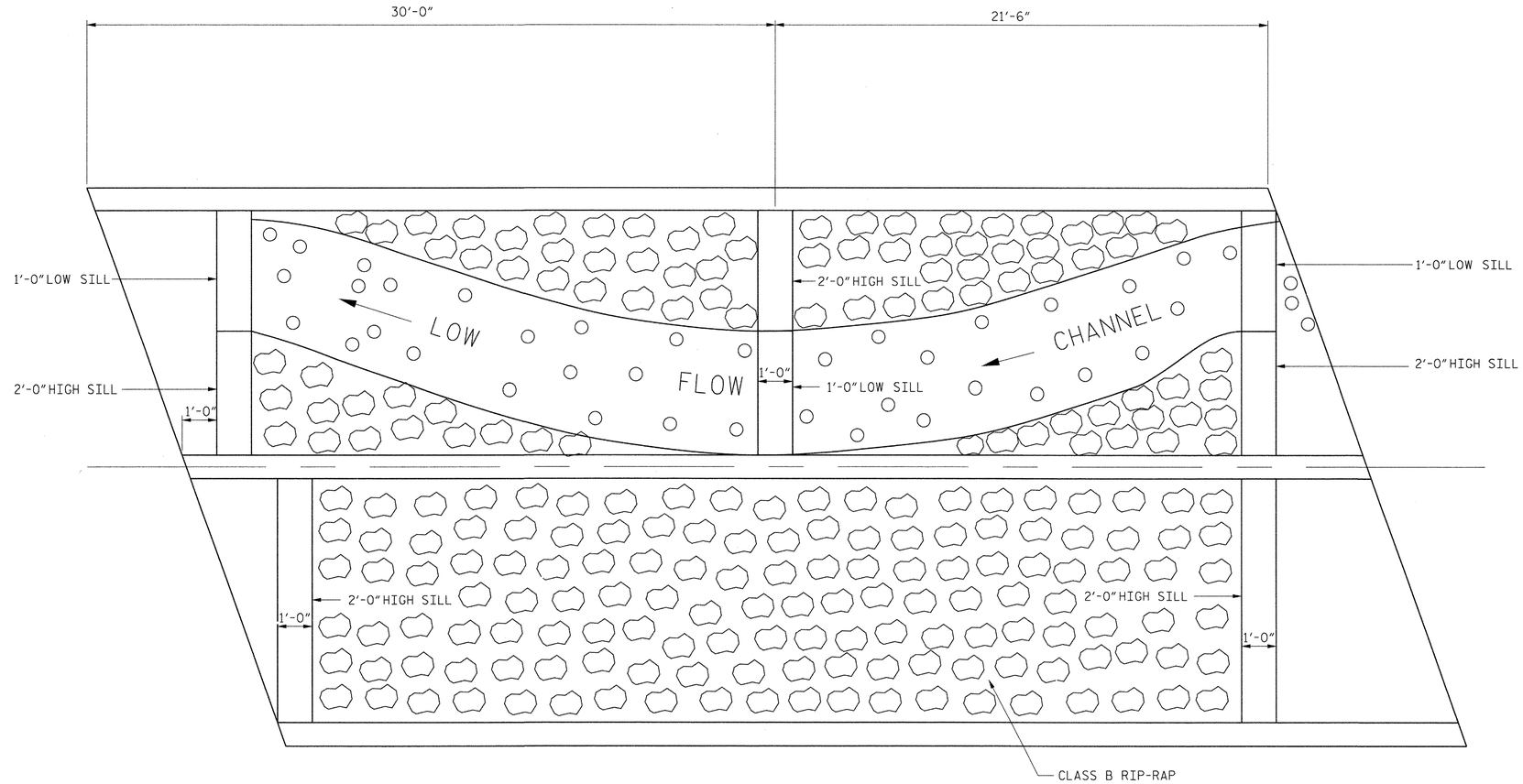

PLAN

NOTES:

BED MATERIAL BETWEEN SILLS/BAFFLES IN THE CULVERT SHALL PROVIDE A CONTINUOUS LOW FLOW CHANNEL. THE MATERIAL SHALL BE NATURAL STONE WITH A GRADATION SIZE SIMILAR TO THAT OF CLASS B RIP RAP. STONES LARGER THAT 6" SHALL NOT BE PLACED WITHIN THE LOW FLOW CHANNEL. BED MATERIALS SUBJECT TO APPROVAL BY THE ENGINEER

SILLS/BAFFLES ARE TO BE 1'-0" WIDE, CAST SEPARATELY AND ATTACHED BY DOWELS.

TOP OF LOW SILLS/BAFFLES SHOULD MATCH STREAM BED ELEVATION IN LOW FLOW CHANNEL OF STREAM. (THALWEG)

CLASS B RIP RAP MAY BE USED TO SUPLEMENT NATURAL BED MATERIAL.

DO NOT SET ELEVATION OF HIGH SILLS/BAFFLES ABOVE BANK FULL.

NUMBER OF SILLS/BAFFLES DETERMINED BY THE ENGINEER.

SET ASIDE EXCAVATED NATURAL BED MATERIALS AND USE IT TO BACKFILL INSIDE BOTTOM OF RCBC CELLS.

SILL QUANTITIES
(INCLUDED IN TOTAL FOR STRUCTURE)

BAR	NO.	SIZE	TYPE	LENGTH	WEIGHT
D1	23	#6	STR	2'-6"	86
D2	9	#6	STR	1'-6"	20
REINFORCING STEEL TOTAL					106 LBS
CLASS A CONCRETE TOTAL					2.8 CY
CLASS B RIP RAP					56 TONS

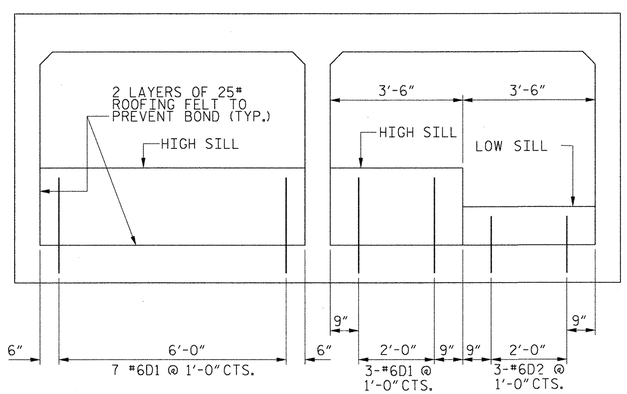

ELEVATION VIEW ELEMENT

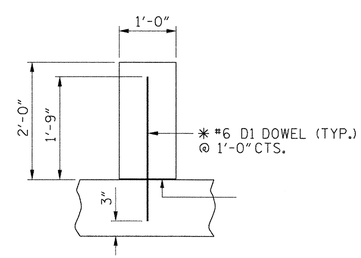

* DOWELS MAY BE PUSHED INTO GREEN CONCRETE AFTER SLAB HAS BEEN FLOAT FINISHED

SECTION THRU 2'-0" SILL

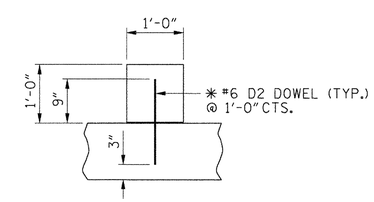

* DOWELS MAY BE PUSHED INTO GREEN CONCRETE AFTER SLAB HAS BEEN FLOAT FINISHED

SECTION THRU 1'-0" SILL

PROJECT NO. _____

_____ COUNTY

STATION: _____

SHEET 3 OF 6

STATE OF NORTH CAROLINA
DEPARTMENT OF TRANSPORTATION
RALEIGH

CONCRETE SILL DETAILS

NORTH CAROLINA PROFESSIONAL SEAL 14047 ENGINEER STEPHEN D. COOK
4/11/14

THE LOUIS BERGER GROUP, Inc.
1001 Wade Avenue, Suite 400
Raleigh, NC 27605-3322

REVISIONS						SHEET NO.
NO.	BY:	DATE:	NO.	BY:	DATE:	C-3
1			3			6
2			4			

DRAWN BY : R. KNIGHT DATE : JUNE 2012
CHECKED BY : S. COOK DATE : JUNE 2012

G:\OR Projects\OR1100 - NCDOT Group W\430321\Structures\430321_RCBC_03.dgn
4/11/2014 CKE_R2514B_PDF_half_pitcf@R2514B_str.tbl

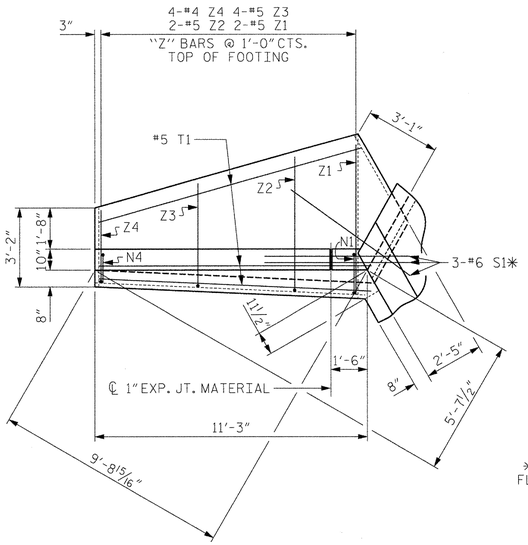

PLAN W2

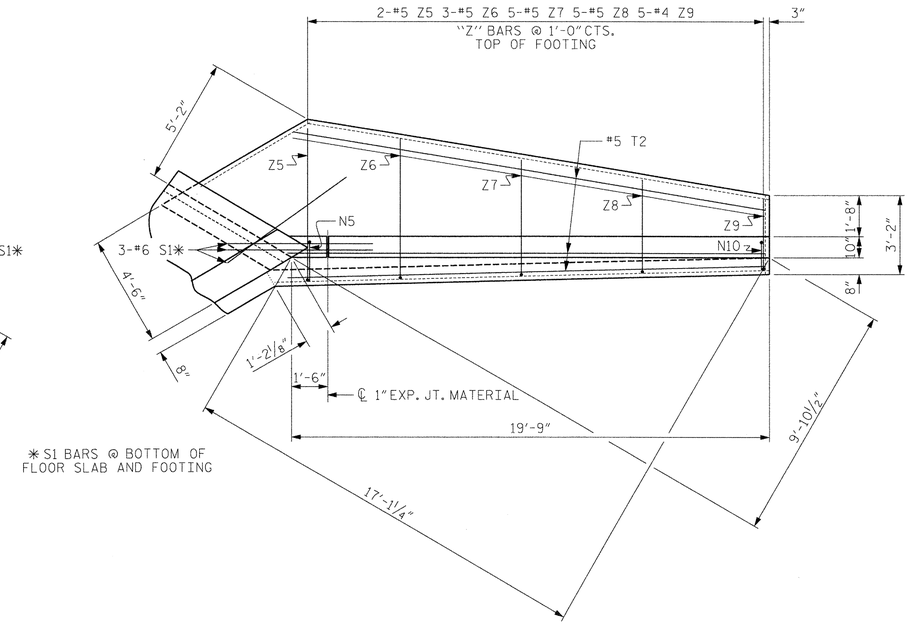

* S1 BARS @ BOTTOM OF FLOOR SLAB AND FOOTING

PLAN W1

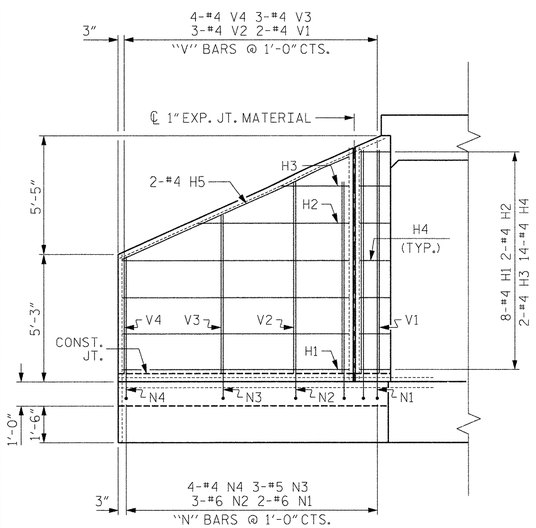

ELEVATION W2

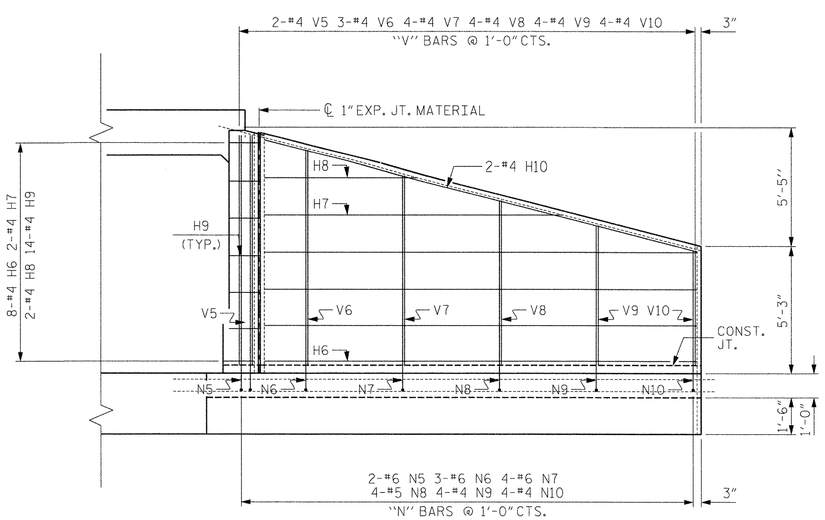

ELEVATION W1

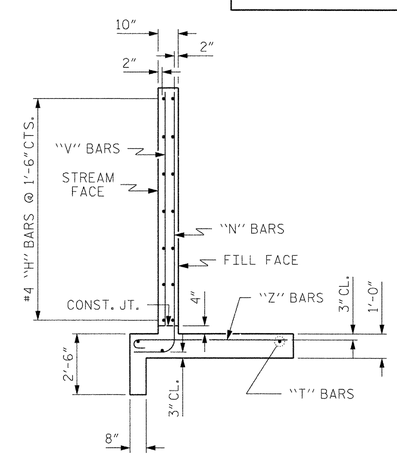

TYPICAL WING SECTION

BAR TYPES

ALL BAR DIMENSIONS ARE OUT TO OUT.

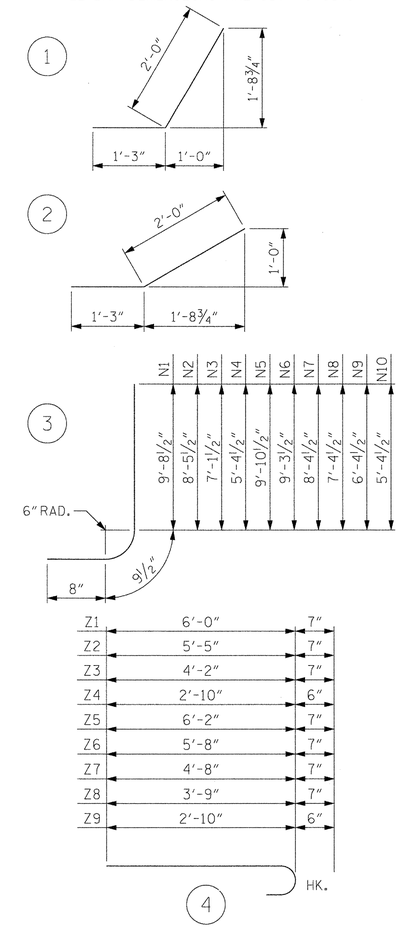

BILL OF MATERIAL

BAR	NO.	SIZE	TYPE	LENGTH	WEIGHT
H1	16	#4	STR	9'-4"	100
H2	4	#4	STR	6'-3"	17
H3	4	#4	STR	2'-10"	8
H4	28	#4	1	3'-3"	61
H5	4	#4	STR	10'-2"	27
H6	16	#4	STR	17'-10"	191
H7	4	#4	STR	12'-4"	33
H8	4	#4	STR	6'-3"	17
H9	28	#4	2	3'-3"	61
H10	4	#4	STR	18'-5"	49
N1	4	#6	3	11'-2"	67
N2	6	#6	3	9'-11"	89
N3	6	#5	3	8'-7"	54
N4	8	#4	3	6'-10"	37
N5	4	#6	3	11'-4"	68
N6	6	#6	3	10'-9"	97
N7	8	#6	3	9'-10"	118
N8	8	#5	3	8'-10"	74
N9	8	#4	3	7'-10"	42
N10	8	#4	3	6'-10"	37
S1	12	#6	STR	6'-0"	108
T1	6	#5	STR	11'-3"	70
T2	6	#5	STR	19'-9"	124
V1	4	#4	STR	9'-1"	24
V2	6	#4	STR	7'-10"	31
V3	6	#4	STR	6'-6"	26
V4	8	#4	STR	4'-10"	26
V5	4	#4	STR	9'-4"	25
V6	6	#4	STR	8'-9"	35
V7	8	#4	STR	7'-9"	41
V8	8	#4	STR	6'-9"	36
V9	8	#4	STR	5'-9"	31
V10	8	#4	STR	4'-9"	25
Z1	4	#5	4	6'-7"	27
Z2	4	#5	4	6'-0"	25
Z3	8	#5	4	4'-9"	40
Z4	8	#4	4	3'-4"	18
Z5	4	#5	4	6'-9"	28
Z6	6	#5	4	6'-3"	39
Z7	10	#5	4	5'-3"	55
Z8	10	#5	4	4'-4"	45
Z9	10	#4	4	3'-4"	22

REINFORCING STEEL FOR 4 WINGS 2148 LBS

CLASS A CONCRETE

4 WINGS	30.2	CY
2 HEADWALLS	2.2	CY
2 END CURTAIN WALLS	6.8	CY
TOTAL	39.2	CY

PROJECT NO. 17BP.14.R.55

HAYWOOD COUNTY

STATION: 12+94.85 -L-

SHEET 4 OF 6

STATE OF NORTH CAROLINA
DEPARTMENT OF TRANSPORTATION
RALEIGH

STANDARD WINGS FOR CONCRETE BOX CULVERT

H = 9'-0" SLOPE = 2:1

60° OR 120° SKEW

NORTH CAROLINA PROFESSIONAL SEAL 14047 ENGINEER STEPHEN D. COOK
7/11/14

THE LOUIS BERGER GROUP, Inc.
1001 Wade Avenue, Suite 400
Raleigh, NC 27605-3322

REVISIONS						
NO.	BY:	DATE:	NO.	BY:	DATE:	
1			3			
2			4			

SHEET NO. C-4

TOTAL SHEETS 6

ASSEMBLED BY : J. MYA	DATE : 6-2012	
CHECKED BY : S. COOK	DATE : 7-2012	
DRAWN BY : CCJ	12/99	
CHECKED BY : RWW	03/00	

STD. NO. CW6009

G:\OR Projects\OR1100 - NCDOT Group W\430321\Structures\430321_RCBC_04.dgn
4/11/2014 CKE_R2514B_PDF_half_pltcfg R2514B_str.tbl

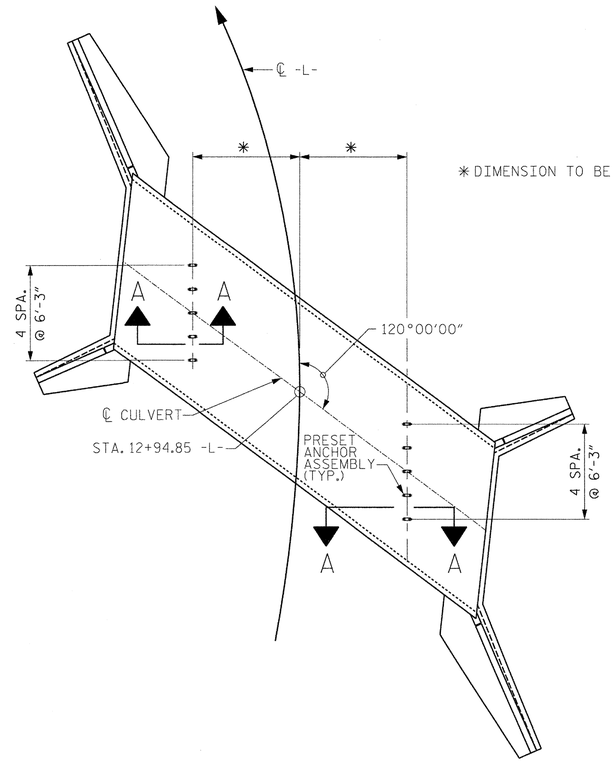

* DIMENSION TO BE FURNISHED BY THE ENGINEER.

PLAN

SHOWING : GUARDRAIL ANCHOR ASSEMBLY SPACING.

NOTES

THE GUARDRAIL ANCHOR ASSEMBLY FOR CULVERTS SHALL CONSIST OF THE FOLLOWING COMPONENTS :

A. FERRULES SHALL BE MADE FROM STEEL MEETING THE REQUIREMENTS OF AASHTO M169, GRADE 12L14 AND SHALL HAVE A MINIMUM LENGTH OF THREADS OF 2½".

B. 4 - 1" Ø X 2 ¼" BOLTS WITH WASHERS. BOLTS SHALL CONFORM TO THE REQUIREMENTS OF ASTM A307. BOLTS AND WASHERS SHALL BE GALVANIZED. (AT THE CONTRACTOR'S OPTION, STAINLESS STEEL BOLTS AND WASHERS MAY BE USED AS AN ALTERNATE FOR THE 1" Ø X 2¼" GALVANIZED BOLTS AND WASHERS. THEY SHALL CONFORM TO OR EXCEED THE MECHANICAL REQUIREMENTS OF ASTM A307. THE USE OF THIS ALTERNATE SHALL BE APPROVED BY THE ENGINEER.)

C. WIRE STRUTS SHOWN IN THE GUARDRAIL ANCHOR ASSEMBLY FOR CULVERTS DETAIL ARE MINIMUM ALLOWABLE SIZE AND SHALL HAVE A MINIMUM TENSILE STRENGTH OF 100,000 P.S.I. AS AN OPTION, A 7/16" Ø WIRE STRUT WITH A MINIMUM TENSILE STRENGTH OF 90,000 PSI IS ACCEPTABLE.

GUARDRAIL ANCHOR ASSEMBLY WITH BOLTS SHALL BE ASSEMBLED IN THE SHOP. BOLT THREADS MAY BE RECUT AS NECESSARY TO INSURE FIT.

THE COST OF THE GUARDRAIL ANCHOR ASSEMBLY FOR CULVERTS COMPLETE IN PLACE, SHALL BE INCLUDED IN THE UNIT CONTRACT PRICE BID FOR CLASS "A" CONCRETE.

FERRULES TO BE PLUGGED DURING POURING OF SLAB AS RECOMMENDED BY THE MANUFACTURER.

AT THE CONTRACTOR'S OPTION, FERRULES WITH OPEN OR CLOSED ENDS MAY BE USED.

PAYMENT FOR GUARDRAIL, POSTS, AND POST BASE PLATES IS INCLUDED IN ROADWAY PAY ITEMS.

SLAB REINFORCING STEEL MAY BE SHIFTED AS NECESSARY TO CLEAR GUARDRAIL ANCHOR ASSEMBLY. CARE SHOULD BE TAKEN TO KEEP THE SHIFTING OF REINFORCING STEEL TO A MINIMUM.

THE CONTRACTOR MAY USE ADHESIVELY ANCHORED ANCHOR BOLTS IN PLACE OF GUARDRAIL ANCHOR ASSEMBLY. LEVEL TWO FIELD TESTING IS REQUIRED, AND THE YIELD LOAD OF THE 1" Ø BOLT IS 21.8 KIPS. FOR ADHESIVELY ANCHORED ANCHOR BOLTS OR DOWELS, SEE STANDARD SPECIFICATIONS.

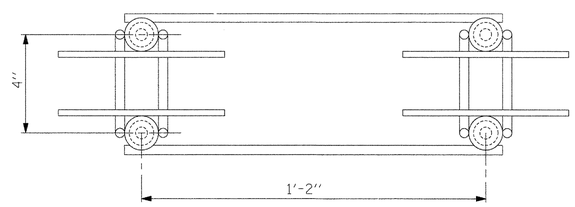

PLAN

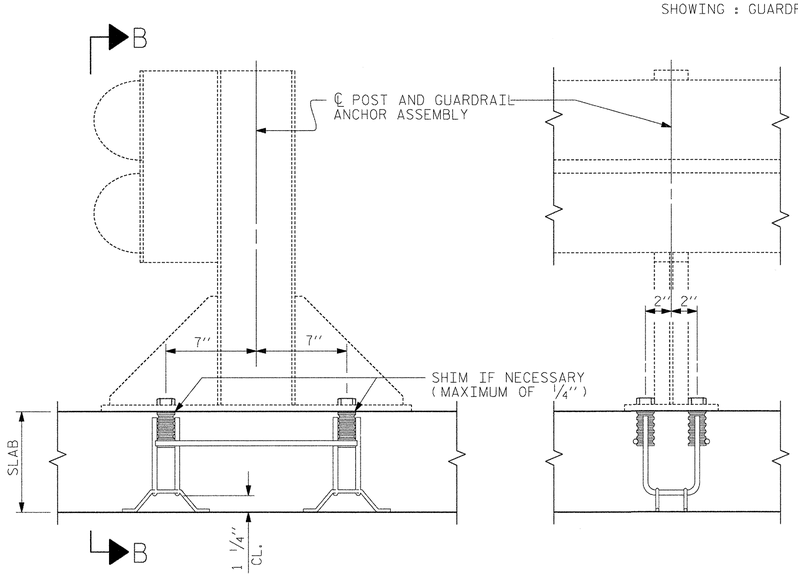

SECTION A-A

SECTION B-B

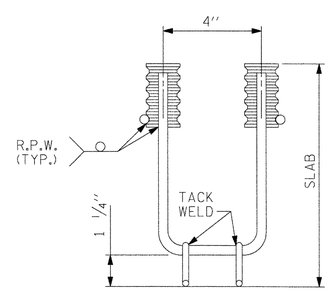

ELEVATION

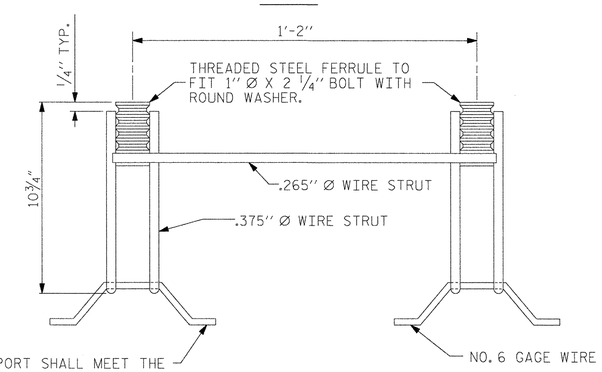

THIS SUPPORT SHALL MEET THE REQUIREMENTS AS SPECIFIED FOR SUPPORTS FOR REINFORCING STEEL. SEE SPECIFICATIONS.

SIDE VIEW

GUARDRAIL ANCHOR ASSEMBLY FOR CULVERTS

NORTH CAROLINA PROFESSIONAL SEAL 14047 ENGINEER STEPHEN D. COOK
4/11/14

PROJECT NO. 17BP.14.R.55
HAYWOOD COUNTY
STATION: 12+94.85 -L-

SHEET 5 OF 6

STATE OF NORTH CAROLINA
DEPARTMENT OF TRANSPORTATION
RALEIGH

STANDARD

ANCHORAGE DETAILS FOR GUARDRAIL ANCHOR ASSEMBLY FOR CULVERTS

ASSEMBLED BY : R. KNIGHT	DATE : APR. 2012
CHECKED BY : S. COOK	DATE : APR. 2012

DRAWN BY : FCJ	6/88	REV. 7/10/01	LES/RDR
CHECKED BY : ARB	6/88	REV. 5/7/03	RWW/JTE
		REV. 5/1/06R	KMM/GM

THE LOUIS BERGER GROUP, Inc.
1001 Wade Avenue, Suite 400
Raleigh, NC 27605-3322

REVISIONS							SHEET NO.
NO.	BY:	DATE:	NO.	BY:	DATE:		C-5
1			3				6
2			4				

STD. NO. GRA1

G:\OR Projects\OR1100 - NCDOT Group W\430321\Structures\430321_RCBC_05.dgn
CKE_R2514B_PDF_half_pltcfg\2514B_str.tbl
4/11/2014

LOAD AND RESISTANCE FACTOR RATING (LRFR) SUMMARY FOR REINFORCED CONCRETE BOX CULVERTS

LEVEL		VEHICLE	WEIGHT (W) (TONS)	CONTROLLING LOAD RATING (#)	MINIMUM RATING FACTORS (RF)	TONS = W × RF	STRENGTH I LIMIT STATE									COMMENT NUMBER
							LIVE-LOAD FACTORS (γ_{LL})	MOMENT				SHEAR				
								RATING FACTOR	BOX NO.	ELEMENT TYPE	DISTANCE FROM LEFT END OF ELEMENT (ft)	RATING FACTOR	BOX NO.	ELEMENT TYPE	DISTANCE FROM LEFT END OF ELEMENT (ft)	
DESIGN LOAD RATING		HL-93 (INVENTORY)	N/A	1	1.01	-	1.75	1.40	2	TOP SLAB	20.00	1.01	2	TOP SLAB	20.00	
		HL-93 (OPERATING)	N/A		1.31	-	1.35	1.82	2	TOP SLAB	20.00	1.31	2	TOP SLAB	20.00	
		HS-20 (INVENTORY)	36.000	2	1.21	43.56	1.75	1.67	2	TOP SLAB	20.00	1.21	2	TOP SLAB	20.00	
		HS-20 (OPERATING)	36.000		1.57	56.52	1.35	2.16	2	TOP SLAB	20.00	1.57	2	TOP SLAB	20.00	
LEGAL LOAD RATING	SINGLE VEHICLE (SV)	SNSH	13.500		2.78	37.53	1.40	6.18	2	TOP SLAB	20.00	2.78	2	TOP SLAB	20.00	
		SNGARBS2	20.000		2.47	49.40	1.40	3.31	2	TOP SLAB	20.00	2.47	2	TOP SLAB	20.00	
		SNAGRIS2	22.000		2.24	49.28	1.40	3.03	2	TOP SLAB	20.00	2.24	2	TOP SLAB	20.00	
		SNCOTTS3	27.250		1.54	41.97	1.40	3.32	2	TOP SLAB	20.00	1.54	2	TOP SLAB	20.00	
		SNAGGRS4	34.925		1.40	48.90	1.40	1.92	2	TOP SLAB	20.00	1.40	2	TOP SLAB	20.00	
		SNS5A	35.550		1.56	55.46	1.40	2.13	2	TOP SLAB	20.00	1.56	2	TOP SLAB	20.00	
		SNS6A	39.950		1.44	57.53	1.40	1.98	2	TOP SLAB	20.00	1.44	2	TOP SLAB	20.00	
		SNS7B	42.000		1.44	60.48	1.40	1.98	2	TOP SLAB	20.00	1.44	2	TOP SLAB	20.00	
	TRUCK TRACTOR SEMI-TRAILER (TTST)	TNAGRIT3	33.000		1.68	55.44	1.40	2.34	2	TOP SLAB	20.00	1.68	2	TOP SLAB	20.00	
		TNT4A	33.075		1.77	58.54	1.40	3.30	2	TOP SLAB	20.00	1.77	2	TOP SLAB	20.00	
		TNT6A	41.600		1.55	64.48	1.40	2.13	2	TOP SLAB	20.00	1.55	2	TOP SLAB	20.00	
		TNT7A	42.000		1.51	63.42	1.40	2.08	2	TOP SLAB	20.00	1.51	2	TOP SLAB	20.00	
		TNT7B	42.000		1.65	69.30	1.40	2.26	2	TOP SLAB	20.00	1.65	2	TOP SLAB	20.00	
		TNAGRIT4	43.000		1.52	65.36	1.40	2.08	2	TOP SLAB	20.00	1.52	2	TOP SLAB	20.00	
		TNAGT5A	45.000		1.43	64.35	1.40	1.98	2	TOP SLAB	20.00	1.43	2	TOP SLAB	20.00	
		TNAGT5B	45.000	3	1.16	52.20	1.40	1.62	2	TOP SLAB	20.00	1.16	2	TOP SLAB	20.00	

LOAD FACTORS:

DESIGN LOAD RATING FACTORS

LOAD TYPE	MAX FACTOR	MIN FACTOR
DC	1.25	0.90
DW	1.50	0.65
EV	1.30	0.90
EH	1.35	0.90
ES	1.35	0.90
	1.75	--
WA	1.00	--

NOTE:

RATING FACTORS ARE BASED ON THE STRENGTH I LIMIT STATE.

COMMENTS:

1.
2.
3.
4.

(#) CONTROLLING LOAD RATING

(1) DESIGN LOAD RATING (HL-93)

(2) DESIGN LOAD RATING (HS-20)

(3) LEGAL LOAD RATING **

** SEE CHART FOR VEHICLE TYPE

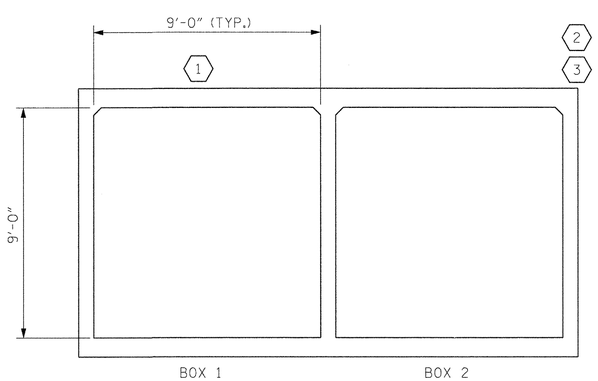

LRFR SUMMARY

(LOOKING DOWNSTREAM)

PROJECT NO. 17BP.14.R.55

HAYWOOD COUNTY

STATION: 12+94.85 -L-

SHEET 6 OF 6

STATE OF NORTH CAROLINA
DEPARTMENT OF TRANSPORTATION
RALEIGH

STANDARD

LRFR SUMMARY FOR REINFORCED CONCRETE BOX CULVERTS (NON-INTERSTATE TRAFFIC)

NORTH CAROLINA PROFESSIONAL SEAL 14047 ENGINEER STEPHEN D. COOK
4/11/14

THE LOUIS BERGER GROUP, Inc.
1001 Wade Avenue, Suite 400
Raleigh, NC 27605-3322

REVISIONS						SHEET NO.
NO.	BY:	DATE:	NO.	BY:	DATE:	C-6
1			3			TOTAL SHEETS
2			4			6

STD. NO. LRFR5

ASSEMBLED BY : R. KNIGHT	DATE : MAR. 2012
CHECKED BY : S. COOK	DATE : JUNE 2012
DRAWN BY : WMC 7/11	REV. 10/1/11 MAA/GM
CHECKED BY : GM 7/11	

G:\OR Projects\OR1100 - NCDOT Group W\430321\Structures\430321_RCBC_06.dgn
4/11/2014 10:54:16 AM CKE_R2514B_PDF_half.pltcfg R2514B_str.tbl