PROJECT REFERENCE NO.	SHEET NO.
43554	1
R/W SHEET NO.	
ROADWAY DESIGN ENGINEER	HYDRAULICS ENGINEER

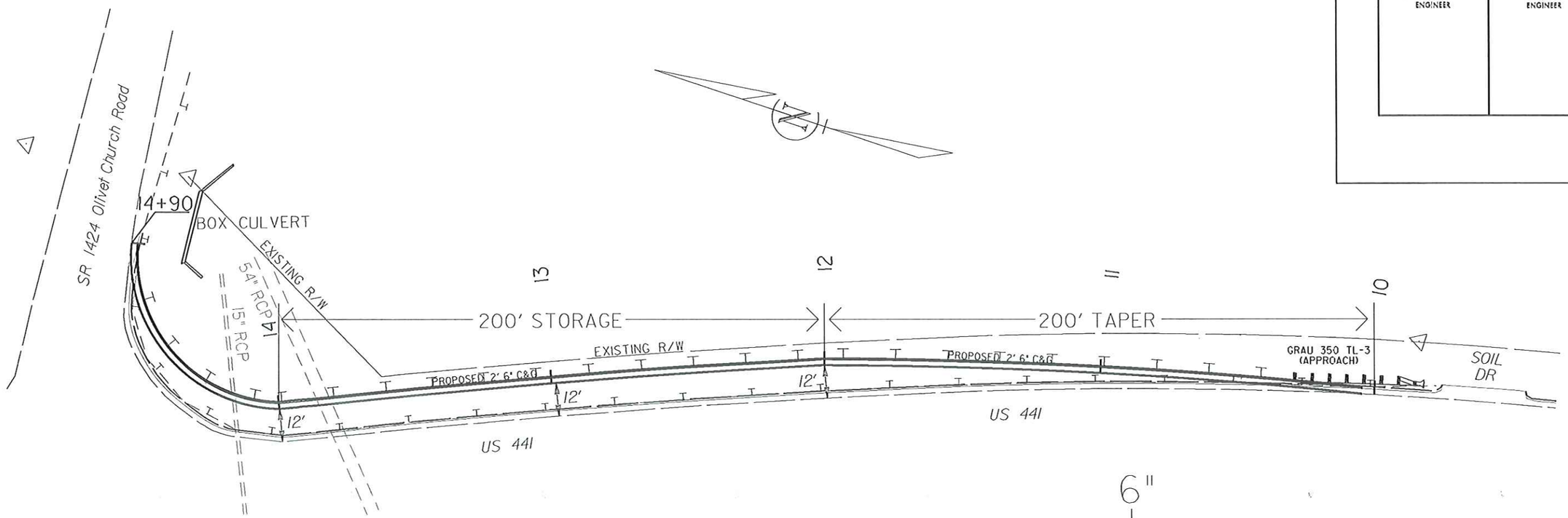

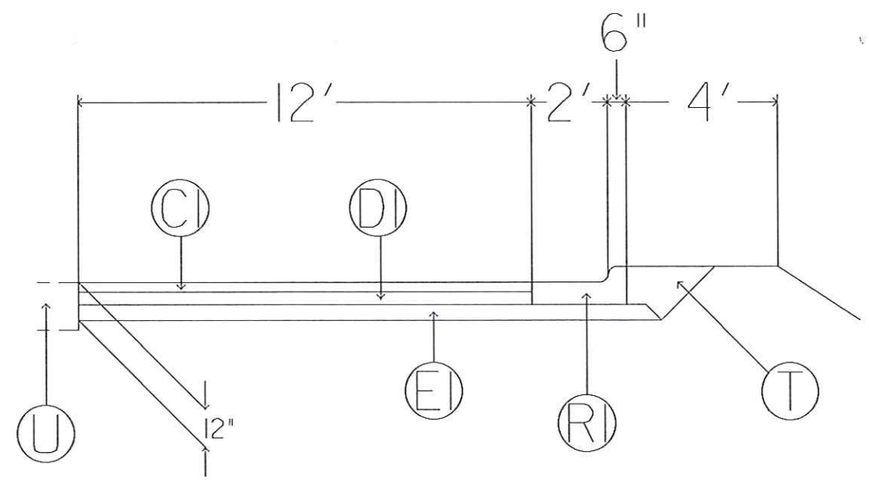

PAVEMENT SCHEDULE	
C1	3" S9.5 B
D1	4" I19.0 B
E1	5" B25.0 B
R1	2' 6" CONCRETE C&G
T	EARTH MATERIAL
U	EXISTING PAVEMENT

NOTES:

1. SAW CUT EXISTING PAVEMENT FOR NEAT LINE
2. MATCH EXISTING PAVEMENT CROSS SLOPE

40' 0' 40' 80' 120'

REVISIONS

8/17/99

28-MAR-2013 13:36
C:\Projects\Olivet Church Rd\Final2d Design.dgn