09/28/99

TIP PROJECT: BD-5114Q

CONTRACT: DN00084

$$$$$SYSTIME$$$$$
$$$$$USERNAME$$$$$

STATE	STATE PROJECT REFERENCE NO.	SHEET NO.	TOTAL SHEETS
N.C.	BD-5114Q	1	

STATE PROJ. NO.	F.A. PROJ. NO.	DESCRIPTION
45360.1.17	BRZ-1182(3)	P.E.
45360.2.17	BRZ-1182(3)	R/W
45360.3.17	BRZ-1182(3)	CONST.

STATE OF NORTH CAROLINA
DIVISION OF HIGHWAYS

SWAIN COUNTY

LOCATION: BRIDGE NO. 151 OVER CONLEYS CREEK ON SR 1182 (WILLIAMSON ROAD)

TYPE OF WORK: GRADING, DRAINAGE, PAVING, AND STRUCTURE

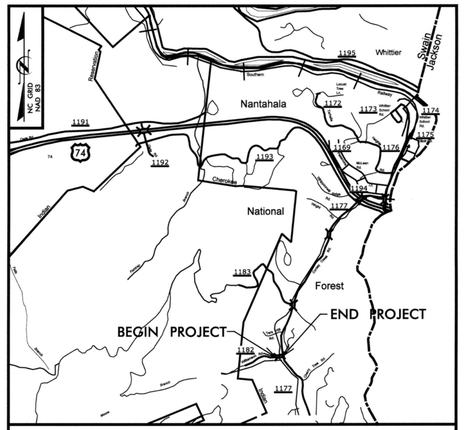

VICINITY MAP

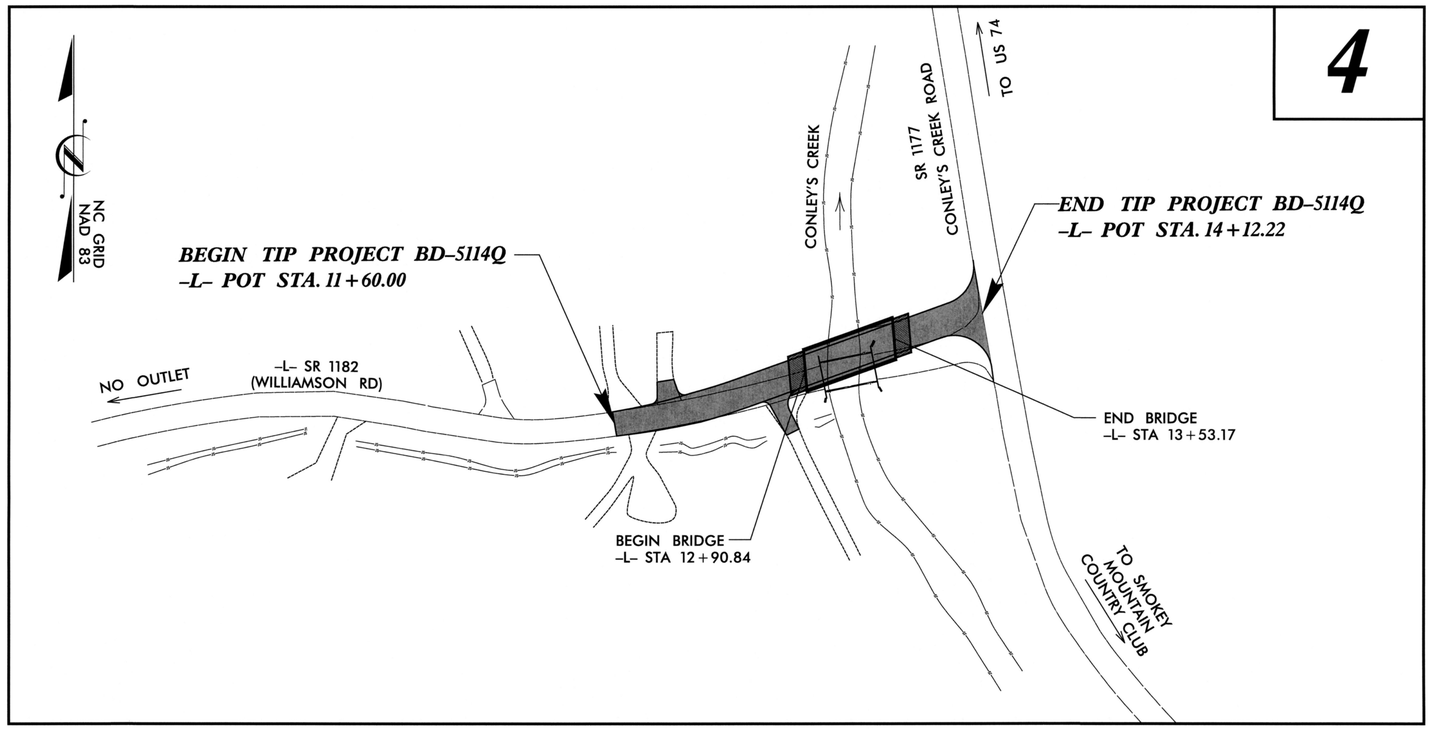

V&M
Vaughn & Melton
Consulting Engineers
Asheville, North Carolina 828-253-2796
Charlotte, North Carolina 704-357-0488
Tri-Cities, Tennessee 423-467-8401
Knoxville, Tennessee 865-546-5600
Middlesboro, Kentucky 606-248-6600
Spartanburg, South Carolina 864-574-4775

Copyright © 1994 Vaughn & Melton, Inc. All Rights Reserved

GRAPHIC SCALES

20 10 0 20 40
PLANS

20 10 0 20 40
PROFILE (HORIZONTAL)

4 2 0 4 8
PROFILE (VERTICAL)

DESIGN DATA

ADT 2011 = 105
ADT 2031 = 150
DHV = 14%
D = 60%
T = N/A
V = 40 MPH
FUNCT. CLASS = RURAL LOCAL

PROJECT LENGTH

LENGTH ROADWAY TIP PROJECT BD-5114Q = 0.036 MI
LENGTH STRUCTURE TIP PROJECT BD-5114Q = 0.012 MI
TOTAL LENGTH OF TIP PROJECT BD-5114Q = 0.048 MI

Prepared In the Office of:
VAUGHN & MELTON
1318-F PATTON AVE.
ASHEVILLE NC, 28806
FOR THE NORTH CAROLINA DIVISION OF HIGHWAYS

2012 STANDARD SPECIFICATIONS

RIGHT OF WAY DATE:
OCTOBER 21, 2011

LETTING DATE:
MAY 28, 2013

REECE SCHULER, PE
PROJECT ENGINEER

AARON CARVER, PE
PROJECT DESIGN ENGINEER

NCDOT CONTACT:
JOSH DEYTON, PE
DIVISION BRIDGE PROJECT MANAGER

HYDRAULICS ENGINEER

NORTH CAROLINA PROFESSIONAL SEAL 18462 ENGINEER JAMES C. DAVIS

SIGNATURE: James C. Davis 4/29/13 P.E.

ROADWAY DESIGN ENGINEER

NORTH CAROLINA PROFESSIONAL SEAL 26960 ENGINEER REECE M. SCHULER

SIGNATURE: Reece Schuler 4/29/2013 P.E.

DIVISION OF HIGHWAYS STATE OF NORTH CAROLINA

STATE OF NORTH CAROLINA DEPARTMENT OF TRANSPORTATION

PROJECT REFERENCE NO.	SHEET NO.
BD-5114Q	1-A

ROADWAY DESIGN ENGINEER

NORTH CAROLINA PROFESSIONAL SEAL 26960 ENGINEER REECE M. SCHEID

4/29/2013

INDEX OF SHEETS

SHEET NUMBER	SHEET
1	TITLE SHEET
1-A	INDEX OF SHEETS, GENERAL NOTES, AND LIST OF STANDARD DRAWINGS
1-B	CONVENTIONAL SYMBOLS
1-C	SURVEY CONTROL SHEET
2	PAVEMENT SCHEDULE, TYPICAL SECTIONS, AND WEDGING DETAILS
2-A	PREFORMED SCOUR HOLE DETAIL
3	SUMMARY OF QUANTITIES
3A	SUMMARY OF DRAINAGE QUANTITIES, SUMMARY OF GUARDRAIL, AND ASPHALT PAVEMENT REMOVAL SUMMARY
3B	EARTHWORK SUMMARY
4	PLAN SHEET
5	PROFILE SHEET
TCP-1 THRU TCP-4	TRAFFIC CONTROL PLANS
SIG-1	SIGNAL PLAN
PM-1	PERMANENT PAVEMENT MARKING PLAN
EC-1 THRU EC-3C	EROSION CONTROL PLANS
UO-1 THRU UO-2	UTILITIES BY OTHERS
X-0	CROSS-SECTION SUMMARY
X-1 THRU X-4	CROSS-SECTIONS
S-1 THRU S-26	STRUCTURE PLANS

GENERAL NOTES:

2012 SPECIFICATIONS
EFFECTIVE: 01-17-12

GRADE LINE:
GRADING AND SURFACING OR RESURFACING AND WIDENING:

THE GRADE LINES SHOWN DENOTE THE FINISHED ELEVATION OF THE PROPOSED SURFACING AT GRADE POINTS SHOWN ON THE TYPICAL SECTIONS. WHERE NO GRADE LINES ARE SHOWN, THE PROFILES SHOWN DENOTE THE TOP ELEVATION OF THE EXISTING PAVEMENT ALONG THE CENTER LINE OF SURVEY ON WHICH THE PROPOSED RESURFACING WILL BE PLACED. GRADE LINES MAY BE ADJUSTED BY THE ENGINEER IN ORDER TO SECURE A PROPER TIE-IN.

CLEARING:

CLEARING ON THIS PROJECT SHALL BE PERFORMED TO THE LIMITS ESTABLISHED BY METHOD II.

SUPERELEVATION:

ALL CURVES ON THIS PROJECT SHALL BE SUPERELEVATED IN ACCORDANCE WITH STD. NO. 225.04 USING THE RATE OF SUPERELEVATION AND RUNOFF SHOWN ON THE PLANS. SUPERELEVATION IS TO BE REVOLVED ABOUT THE GRADE POINTS SHOWN ON THE TYPICAL SECTIONS.

SHOULDER CONSTRUCTION:

ASPHALT, EARTH, AND CONCRETE SHOULDER CONSTRUCTION ON THE HIGH SIDE OF SUPERELEVATED CURVES SHALL BE IN ACCORDANCE WITH STD. NO. 560.01.

UNDERDRAINS:

UNDERDRAINS SHALL BE CONSTRUCTED IN ACCORDANCE WITH STD. NO. 815.03 AT LOCATIONS DIRECTED BY THE ENGINEER.

GUARDRAIL:

THE GUARDRAIL LOCATIONS SHOWN ON THE PLANS MAY BE ADJUSTED DURING CONSTRUCTION AS DIRECTED BY THE ENGINEER. THE CONTRACTOR SHOULD CONSULT WITH THE ENGINEER PRIOR TO ORDERING GUARDRAIL MATERIAL.

TEMPORARY SHORING:

SHORING REQUIRED FOR THE MAINTENANCE OF TRAFFIC WILL BE PAID FOR AS "EXTRA WORK" IN ACCORDANCE WITH SECTION 104-7.

SUBSURFACE PLANS:

NO SUBSURFACE PLANS ARE AVAILABLE ON THIS PROJECT. THE CONTRACTOR SHOULD MAKE HIS OWN INVESTIGATION AS TO THE SUBSURFACE CONDITIONS.

END BENTS:

THE ENGINEER SHALL CHECK THE STRUCTURE END BENT PLANS, DETAILS, AND CROSS-SECTION PRIOR TO SETTING OF THE SLOPE STAKES FOR THE EMBANKMENT OR EXCAVATION APPROACHING A BRIDGE.

UTILITIES:

UTILITY OWNERS ON THIS PROJECT ARE: TELEPHONE - FRONTIER COMMUNICATIONS
POWER - DUKE ENERY
CABLE TELEVISION - CHEROKEE CABLE VISION

RIGHT-OF-WAY MARKERS:

ALL RIGHT-OF-WAY MARKERS ON THIS PROJECT SHALL BE PLACED BY OTHERS.

2012 ROADWAY ENGLISH STANDARD DRAWINGS

The following Roadway Standards as appear in "Roadway Standard Drawings" Highway Design Branch - N. C. Department of Transportation - Raleigh, N. C., Dated January 17, 2012 are applicable to this project and by reference hereby are considered a part of these plans:

STD.NO.	TITLE
DIVISION 2 - EARTHWORK	
200.02	Method of Clearing - Method II
225.02	Guide for Grading Subgrade - Secondary and Local
225.04	Method of Obtaining Superelevation - Two Lane Pavement
DIVISION 3 - PIPE CULVERTS	
300.01	Method of Pipe Installation - Method 'A'
DIVISION 5 - SUBGRADE, BASES AND SHOULDERS	
560.01	Method of Shoulder Construction - High Side of Superelevated Curve - Method I
DIVISION 8 - INCIDENTALS	
815.03	Pipe Underdrain and Blind Drain
840.36	Traffic Bearing Grated Drop Inlet - for Steel Double Frame and Grates
840.37	Steel Grate and Frame
840.46	Traffic Bearing Precast Drainage Structure
840.66	Drainage Structure Steps
846.01	Concrete Curb, Gutter and Curb & Gutter
846.04	Drop Inlet Installation in Shoulder Berm Gutter
862.01	Guardrail Placement
862.02	Guardrail Installation
862.03	Structure Anchor Units
876.02	Guide for Rip Rap at Pipe Outlets

$$$$SYSTIME$$$$
$$$$DATE$$$$
$$$$FILENAME$$$$

3/15/06

PROJECT REFERENCE NO.	SHEET NO.
BD-5114Q	1-B

Note: Not to Scale

S.U.E. = Subsurface Utility Engineering

STATE OF NORTH CAROLINA
DIVISION OF HIGHWAYS

CONVENTIONAL PLAN SHEET SYMBOLS

BOUNDARIES AND PROPERTY:

- State Line
- County Line
- Township Line
- City Line
- Reservation Line
- Property Line
- Existing Iron Pin — EIP
- Property Corner
- Property Monument — ECM
- Parcel/Sequence Number — 123
- Existing Fence Line
- Proposed Woven Wire Fence
- Proposed Chain Link Fence
- Proposed Barbed Wire Fence
- Existing Wetland Boundary — WLB
- Proposed Wetland Boundary — WLB
- Existing Endangered Animal Boundary — EAB
- Existing Endangered Plant Boundary — EPB

BUILDINGS AND OTHER CULTURE:

- Gas Pump Vent or U/G Tank Cap
- Sign — S
- Well — W
- Small Mine
- Foundation
- Area Outline
- Cemetery
- Building
- School
- Church
- Dam

HYDROLOGY:

- Stream or Body of Water
- Hydro, Pool or Reservoir
- Jurisdictional Stream — JS
- Buffer Zone 1 — BZ 1
- Buffer Zone 2 — BZ 2
- Flow Arrow
- Disappearing Stream
- Spring
- Swamp Marsh
- Proposed Lateral, Tail, Head Ditch — FLOW
- False Sump

RAILROADS:

- Standard Gauge — CSX TRANSPORTATION
- RR Signal Milepost — MILEPOST 35
- Switch — SWITCH
- RR Abandoned
- RR Dismantled

RIGHT OF WAY:

- Baseline Control Point
- Existing Right of Way Marker
- Existing Right of Way Line
- Proposed Right of Way Line — RW
- Proposed Right of Way Line with Iron Pin and Cap Marker — RW
- Proposed Right of Way Line with Concrete or Granite Marker — RW
- Existing Control of Access — CA
- Proposed Control of Access — CA
- Existing Easement Line — E
- Proposed Temporary Construction Easement — E
- Proposed Temporary Drainage Easement — TDE
- Proposed Permanent Drainage Easement — PDE
- Proposed Permanent Utility Easement — PUE

ROADS AND RELATED FEATURES:

- Existing Edge of Pavement
- Existing Curb
- Proposed Slope Stakes Cut — C
- Proposed Slope Stakes Fill — F
- Proposed Wheel Chair Ramp — WCR
- Proposed Wheel Chair Ramp Curb Cut — WCC
- Curb Cut for Future Wheel Chair Ramp — CCFR
- Existing Metal Guardrail
- Proposed Guardrail
- Existing Cable Guiderail
- Proposed Cable Guiderail
- Equality Symbol
- Pavement Removal

VEGETATION:

- Single Tree
- Single Shrub
- Hedge
- Woods Line
- Orchard
- Vineyard — Vineyard

EXISTING STRUCTURES:

MAJOR:

- Bridge, Tunnel or Box Culvert — CONC
- Bridge Wing Wall, Head Wall and End Wall — CONC WW

MINOR:

- Head and End Wall — CONC HW
- Pipe Culvert
- Footbridge
- Drainage Box: Catch Basin, DI or JB — CB
- Paved Ditch Gutter
- Storm Sewer Manhole — S
- Storm Sewer — S

UTILITIES:

POWER:

- Existing Power Pole
- Proposed Power Pole
- Existing Joint Use Pole
- Proposed Joint Use Pole
- Power Manhole — P
- Power Line Tower
- Power Transformer
- U/G Power Cable Hand Hole — HH
- H-Frame Pole
- Recorded U/G Power Line — P
- Designated U/G Power Line (S.U.E.*) — P

TELEPHONE:

- Existing Telephone Pole
- Proposed Telephone Pole
- Telephone Manhole — T
- Telephone Booth
- Telephone Pedestal — T
- Telephone Cell Tower
- U/G Telephone Cable Hand Hole — HH
- Recorded U/G Telephone Cable — T
- Designated U/G Telephone Cable (S.U.E.*) — T
- Recorded U/G Telephone Conduit — TC
- Designated U/G Telephone Conduit (S.U.E.*) — TC
- Recorded U/G Fiber Optics Cable — T FO
- Designated U/G Fiber Optics Cable (S.U.E.*) — T FO

WATER:

- Water Manhole — W
- Water Meter
- Water Valve
- Water Hydrant
- Recorded U/G Water Line — W
- Designated U/G Water Line (S.U.E.*) — W
- Above Ground Water Line — A/G Water

TV:

- TV Satellite Dish
- TV Pedestal — C
- TV Tower
- U/G TV Cable Hand Hole — HH
- Recorded U/G TV Cable — TV
- Designated U/G TV Cable (S.U.E.*) — TV
- Recorded U/G Fiber Optic Cable — TV FO
- Designated U/G Fiber Optic Cable (S.U.E.*) — TV FO

GAS:

- Gas Valve
- Gas Meter
- Recorded U/G Gas Line — G
- Designated U/G Gas Line (S.U.E.*) — G
- Above Ground Gas Line — A/G Gas

SANITARY SEWER:

- Sanitary Sewer Manhole
- Sanitary Sewer Cleanout
- U/G Sanitary Sewer Line — SS
- Above Ground Sanitary Sewer — A/G Sanitary Sewer
- Recorded SS Forced Main Line — FSS
- Designated SS Forced Main Line (S.U.E.*) — FSS

MISCELLANEOUS:

- Utility Pole
- Utility Pole with Base
- Utility Located Object
- Utility Traffic Signal Box — S
- Utility Unknown U/G Line — ?UTL
- U/G Tank; Water, Gas, Oil
- A/G Tank; Water, Gas, Oil
- U/G Test Hole (S.U.E.*)
- Abandoned According to Utility Records — AATUR
- End of Information — E.O.I.

PROJECT REFERENCE NO.	SHEET NO.
BD-5114Q	1-C
Location and Surveys	

SURVEY CONTROL SHEET BD-5114Q

BL

POINT	DESC.	NORTH	EAST	ELEVATION	L STATION	OFFSET
1	-BL-1	636504.7941	697932.4390	1965.02	OUTSIDE PROJECT LIMITS	
2	-BL-2	636503.0778	698217.5607	1932.02	11+36.85	12.52 LT
3	-BL-3	636530.6701	698473.6436	1915.44	13+91.42	34.49 RT

BY

POINT	DESC.	NORTH	EAST	ELEVATION	Y STATION	OFFSET
4	-BY-4	636803.8439	698440.2751	1909.52	10+10.81	13.58 RT
33	-BL-3	636530.6701	698473.6436	1915.44	12+85.41	24.84 RT
5	-BY-5	636351.4346	698540.5931	1920.81	14+71.76	12.00 RT

****
BM1 ELEVATION = 1985.02
N 636493 E 697835
BL STATION 5+00.00
S 83°21'43.55" W DIST 97.93
8" SPIKE IN ROOT OF 26" POPLAR TREE
****

****
BM2 ELEVATION = 1904.19
N 636868 E 698402
BY STATION 5+00.00.00
N 83°42'25.70" W DIST 74.60
8" SPIKE IN ROOT OF 15" MAPLE TREE
****

****
BM3 ELEVATION = 1915.75
N 636305 E 698538
BY STATION 9+66.54
S 02°52'44.11" W DIST 46.28
8" SPIKE SET IN BASE OF 30" SYCAMORE TREE
****

FINAL -L-

TYPE	STATION	NORTH	EAST
POT	10+00.00	636503.7731	698083.1251
PC	10+53.75	636494.1109	698135.9970
PT	11+58.78	636493.5153	698240.4909
PC	11+76.79	636496.5517	698258.2489
PT	12+46.78	636514.3081	698325.8561
POT	14+22.51	636573.6279	698491.2718

FINAL -Y-

TYPE	STATION	NORTH	EAST
POT	10+00.00	636816.6500	698451.9822
POT	11+78.15	636640.7175	698480.0013
POT	12+46.18	636573.6279	698491.2718
PC	13+61.70	636459.8747	698511.3897
PT	15+23.55	636316.7139	698582.1408
POT	16+14.22	636249.9404	698643.4746

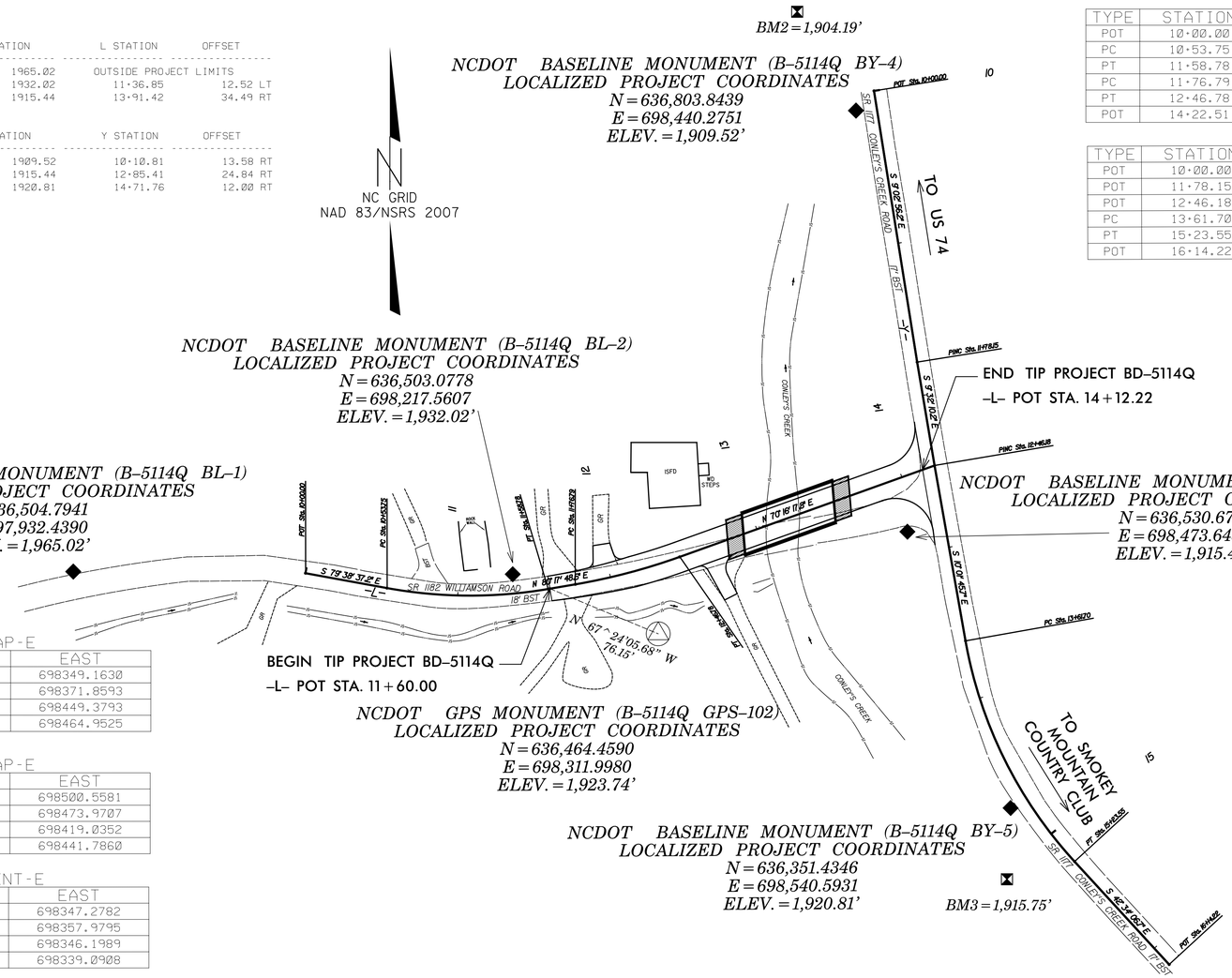

FINAL ROW MARKER IRON PIN AND CAP-E

ALIGN	STATION	OFFSET	NORTH	EAST
L	12+80.00	-23.58	636547.7165	698349.1630
L	13+10.00	-40.00	636573.2996	698371.8593
L	13+95.94	-50.00	636611.7227	698449.3793
L	13+76.72	49.73	636511.3585	698464.9525

FINAL ROW MARKER IRON PIN AND CAP-E

ALIGN	STATION	OFFSET	NORTH	EAST
Y	13+61.70	11.00	636457.9569	698500.5581
Y	13+61.70	38.00	636453.2548	698473.9707
Y	10+04.13	34.02	636807.2208	698419.0352
Y	10+04.24	11.00	636810.7328	698441.7860

FINAL ROW MARKER PERMANENT EASEMENT-E

ALIGN	STATION	OFFSET	NORTH	EAST
L	12+53.25	45.43	636473.7280	698347.2782
L	12+55.70	70.30	636451.1448	698357.9795
L	12+44.34	68.25	636449.1073	698346.1989
L	12+44.50	46.32	636469.8542	698339.0908

FINAL ROW MARKER PERMANENT EASEMENT-E

ALIGN	STATION	OFFSET	NORTH	EAST
Y	13+29.33	-11.00	636493.6643	698516.5845
Y	13+29.55	-44.22	636499.2330	698549.3352
Y	13+59.55	-44.03	636469.6584	698554.3727
Y	13+59.33	-11.00	636464.1227	698521.8091

DATUM DESCRIPTION

THE LOCALIZED COORDINATE SYSTEM DEVELOPED FOR THIS PROJECT IS BASED ON THE STATE PLANE COORDINATES ESTABLISHED BY NCGS FOR MONUMENT "BD-5114Q-G102"
WITH NAD 83/NSRS 2007 STATE PLANE GRID COORDINATES OF
NORTHING: 636464.4590(ft) EASTING: 698311.9980(ft)
ELEVATION: 1923.74(ft)
THE AVERAGE COMBINED GRID FACTOR USED ON THIS PROJECT (GROUND TO GRID) IS: 0.999789594
THE N.C. LAMBERT GRID BEARING AND LOCALIZED HORIZONTAL GROUND DISTANCE FROM "BD-5114Q-G102" TO -L- STATION 11+60.00 IS
N 67°24'05.68" W 76.15'
ALL LINEAR DIMENSIONS ARE LOCALIZED HORIZONTAL DISTANCES
VERTICAL DATUM USED IS NAVD 88

GEOIDAL MODEL – G09NC
NOTE: DRAWING NOT TO SCALE

NOTES:

1. THE CONTROL DATA FOR THIS PROJECT CAN BE FOUND ELECTRONICALLY BY SELECTING PROJECT CONTROL DATA AT:
HTTP://WWW.NCDOT.ORG/DOH/PRECONSTRUCT/HIGHWAY/LOCATION/PROJECT/

THE FILES TO BE FOUND ARE AS FOLLOWS:
TIP BD-5114Q_LS_CONTROL.TXT

SITE CALIBRATION INFORMATION HAS NOT BEEN PROVIDED FOR THIS PROJECT. IF FURTHER INFORMATION IS NEEDED, PLEASE CONTACT THE LOCATION AND SURVEYS UNIT.

INDICATES GEODETIC CONTROL MONUMENTS USED OR SET FOR HORIZONTAL PROJECT CONTROL BY THE NCDOT LOCATION AND SURVEYS UNIT.
PROJECT CONTROL ESTABLISHED USING GLOBAL POSITIONING SYSTEM.

6/2/99
$$$$SYSTIME$$$$
$$$$USERNAME$$$$
$$$$DGNFILE$$$$
$$$$SCRNAME$$$$

PROJECT REFERENCE NO.	SHEET NO.
BD-5114Q	2
ROADWAY DESIGN ENGINEER	PAVEMENT DESIGN ENGINEER
4/29/2013	4/29/2013

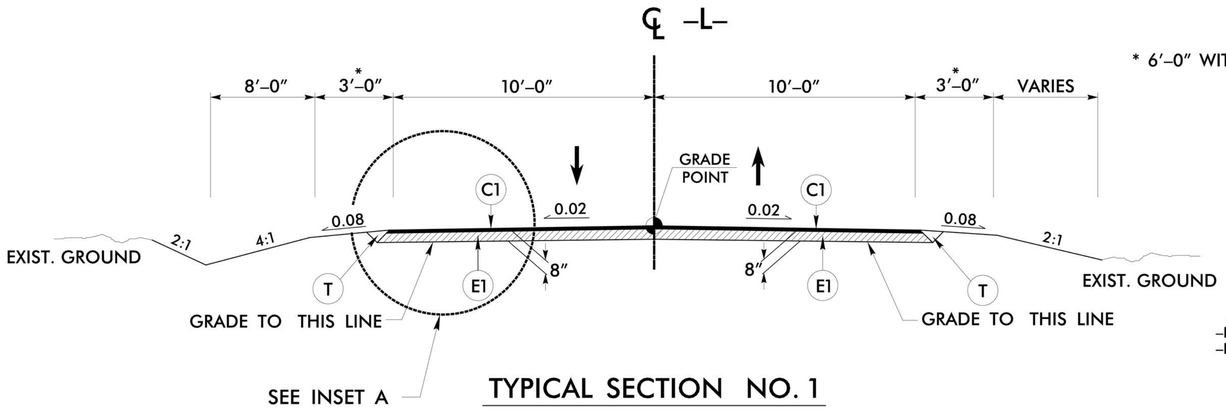

* 6′–0″ WITH GUARDRAIL

TYPICAL SECTION NO. 1

USE TYPICAL SECTION NO. 1

–L– STA. 11+60.00 TO STA. 12+90.84 (BEGIN BRIDGE)
–L– STA. 13+53.17 (END BRIDGE) TO STA. 14+12.22

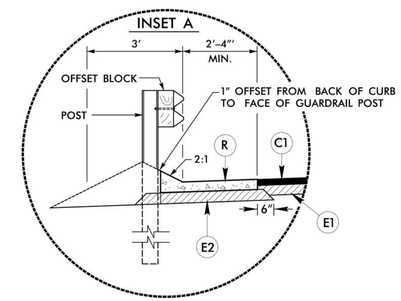

INSET A

–L– STA. 12+15 TO BEGIN APPROACH SLAB

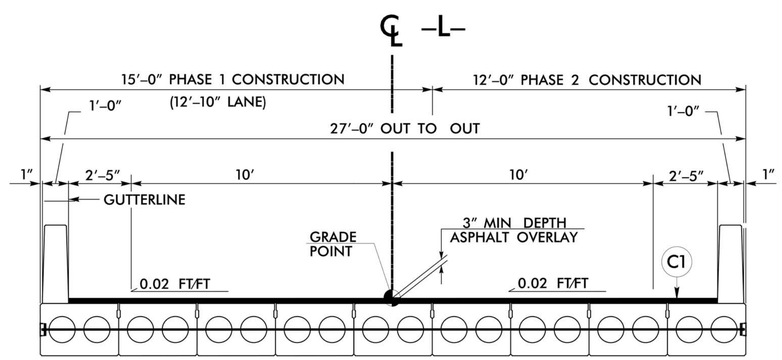

TYPICAL SECTION NO. 2

NOTE: SEE TRAFFIC CONTROL PLANS FOR FURTHER INFORMATION REGARDING THE PHASES FOR CONSTRUCTION

USE TYPICAL SECTION NO. 2

–L– STA. 12+90.84 (BEGIN BRIDGE) TO
–L– STA. 13+53.17 (END BRIDGE)

PAVEMENT SCHEDULE	
C1	PROP. APPROX. 3″ ASPHALT CONCRETE SURFACE COURSE, TYPE S9.5B, AT AN AVERAGE RATE OF 168 LBS. PER SQ. YD. IN EACH OF TWO LAYERS.
E1	PROP. APPROX. 5″ ASPHALT CONCRETE BASE COURSE, TYPE B25.0B, AT AN AVERAGE RATE OF 570 LBS. PER SQ. YD.
E2	PROP. APPROX. 4″ ASPHALT CONCRETE BASE COURSE, TYPE B25.0B, AT AN AVERAGE RATE OF 570 LBS. PER SQ. YD.
R	PROPOSED SHOULDER BERM GUTTER (NCDOT STANDARD DRAWING 846.01)
T	EARTH MATERIAL

NOTE: ALL PAVEMENT SLOPES ARE 1:1 UNLESS SHOWN OTHERWISE.

PROJECT REFERENCE NO.	SHEET NO.
BD-5114Q	2-A

HYDRAULICS ENGINEER

NORTH CAROLINA PROFESSIONAL SEAL 038242 ENGINEER JAMES C. DAVIS

4/29/13

PREFORMED SCOUR HOLE

*NOT TO SCALE

PLAN VIEW

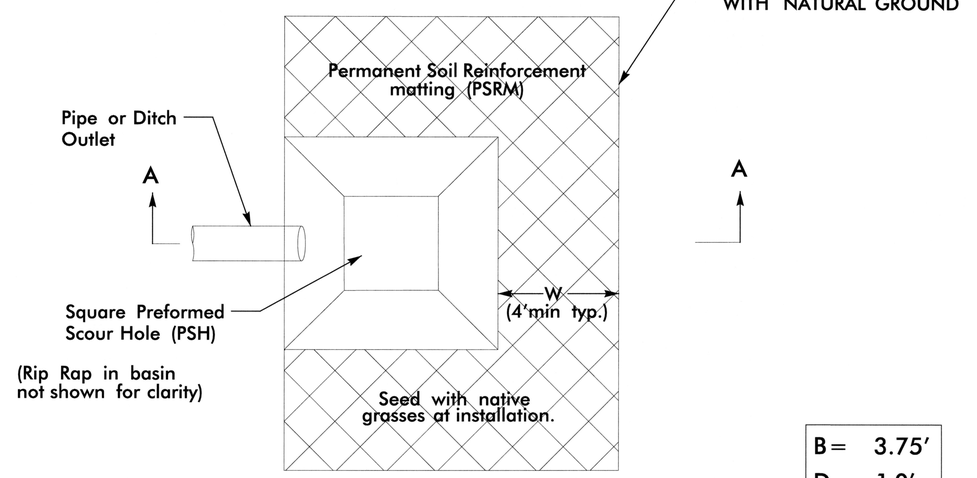

B =	3.75'
D =	1.0'
W =	4.0'

SECTION A–A

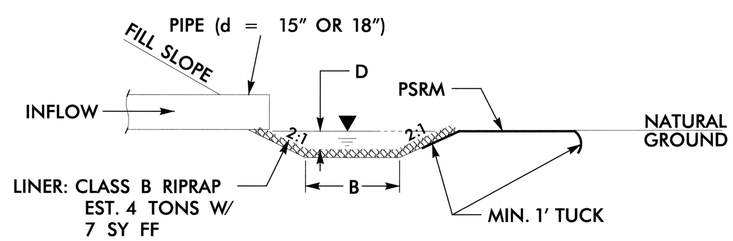

STA. 11+50

6/2/99

$$$$SYSTIME$$$$
$$$$DGN$$$$

PROJECT REFERENCE NO.	SHEET NO.
BD-5114Q	3

STATE OF NORTH CAROLINA
DIVISION OF HIGHWAYS

SUMMARY OF QUANTITIES

Line Item	Sec No.	Quantity	Unit	Description
0000100000-N	800	1	LS	Mobilization
0000400000-N	801	1	LS	Construction Surveying
0030000000-N	SP	1	LS	Bridge Approach Fill - Sub Regional Tier (Sta. 13+22.00)
0043000000-N	226	1	LS	Grading
0057000000-E	226	50	CY	Undercut Excavation
0195000000-E	265	50	CY	Select Granular Material
0196000000-E	270	50	SY	Geotextile for Soil Stabilization
0199000000-E	SP	270	SF	Temporary Shoring
0318000000-E	300	16	Tons	Foundation Conditioning Material, Minor Strs
0320000000-E	300	50	Tons	Foundation Conditioning Geotextile
0366000000-E	310	32	LF	15" Class III R.C. Pipe Culverts
0448200000-E	310	96	LF	15" Class IV R.C. Pipe Culverts
0582000000-E	310	20	LF	15" C.S. Pipe 0.064" Thick
0995000000-E	340	50	LF	Pipe Removal
1099700000-E	505	50	Tons	Class IV Subgrade Stabilization
1121000000-E	520	25	Tons	Aggregate Base Course
1220000000-E	545	50	Tons	Incidental Stone Base
1489000000-E	610	130	Tons	Asphalt Conc Base Course Type B25.0B
1519000000-E	610	120	Tons	Asphalt Conc Surface Course Type S9.5B
1575000000-E	620	15	Tons	Asphalt Binder for Plant Mix
2022000000-E	815	25	CY	Subdrain Excavation
2033000000-E	815	25	CY	Subdrain Fine Aggregate
2044000000-E	815	148	LF	6" Perforated Subdrain Pipe
2070000000-N	815	1	EA	Subdrain Pipe Outlet
2077000000-E	815	6	LF	6" Outlet Pipe (Subdrains)
2286000000-N	840	3	EA	Masonry Drainage Structures
2407000000-N	840	3	EA	Steel Frame with 2 Grates, Std. 840.37
2556000000-E	846	65	LF	Shoulder Berm Gutter
3030000000-E	862	43.75	LF	Steel Beam Guardrail
3045000000-E	862	68.75	LF	Steel Beam Guardrail, (Shop Curved)
3150000000-N	862	5	EA	Additional Guardrail Posts
3180000000-N	862	1	EA	Guardrail Anchor Units, TYPE III (Shop Curved)
3195000000-N	862	1	EA	Guardrail Anchor Units, AT-1
3215000000-N	862	3	EA	Guardrail Anchor Units, TYPE III
3270000000-N	SP	3	EA	Guardrail Anchor Units, Type 350
3345000000-E	864	200	LF	Remove and Reset Existing Guardrail
3380000000-E	862	112.5	LF	Temporary Steel Beam Guardrail
3382000000-E	862	37.5	LF	Temporary Steel Beam Guardrail, (Shop Curved)
3389000000-N	SP	2	EA	Temporary Guardrail Anchor Units, TYPE TL-2
3649000000-E	876	1	Tons	Rip Rap, Class B
3656000000-E	876	5	SY	Geotextile for Drainage
3659000000-N	SP	1	EA	Preformed Scour Hole
4116100000-N	904	1	EA	Sign Erection Relocation Type E Ground Mounted
4400000000-E	1110	174	SF	Stationary Work Signs
4410000000-E	1110	20	SF	Barricade Mounted Work Zone Signs
4430000000-N	1130	12	EA	Drums
4445000000-E	1145	16	LF	Barricades (Type III)
4450000000-N	1150	16	HR	Flagger (By Hour)
4810000000-E	1205	2,700	LF	Paint (4")
4835000000-E	1205	27	LF	Paint (24")
4870000000-E	1205	27	LF	Removal of Pavement Marking (24")
6000000000-E	1605	665	LF	Temporary Silt Fence
6009000000-E	1610	50	Tons	Erosion Control Stone, Class B
6012000000-E	1610	30	Tons	Sediment Control Stone
6015000000-E	1615	0.5	Acres	Temporary Mulching
6018000000-E	1620	50	LBS	Seed For Temporary Seeding
6021000000-E	1620	0.25	Tons	Fertilizer For Temporary Seeding
6029000000-E	SP	100	LF	Safety Fence
6030000000-E	1630	80	CY	Silt Excavation
6036000000-E	1631	1,500	SY	Matting For Erosion Control
6042000000-E	1632	90	LF	1/4" Hardware Cloth
6071010000-E	SP	120	LF	Wattle
6071020000-E	SP	5	LBS	Polyacryamide (PAM)
6084000000-E	1660	0.1	Acres	Seeding & Mulching
6090000000-E	1661	50	LBS	Seed For Repair Seeding
6093000000-E	1661	0.25	Tons	Fertilizer For Repair Seeding
6096000000-E	1662	50	LBS	Seed For Supplemental Seeding
6108000000-E	1665	0.25	Tons	Fertilizer Topdressing
6111000000-E	SP	133.4	LF	Impervious Dike
6117000000-E	SP	25	EA	Response For Erosion Control
7980000000-N	SP	2	EA	Portable Traffic Signal System (2 Head)
				STRUCTURAL ITEMS
8035000000-N	402	1	LS	Removal of Existing Structure (Sta. 13+22.00)
8096000000-E	450	263	LF	Pile Excavation In Soil
8097000000-E	450	50	LF	Pile Excavation Not In Soil
8121000000-N	412	1	LS	Unclassified Structure Excavation (Sta. 13+22.00)
8182000000-E	420	32.5	CY	Class A Concrete (Bridge)
8210000000-N	422	1	LS	Bridge Approach Slabs (Sta. 13+22.00)
8217000000-E	425	4,219	LBS	Reinforcing Steel
8364000000-E	450	315	LF	HP 12X53 Steel Piles
8505000000-E	460	120.26	LF	Vertical Concrete Barrier Rail
8608000000-E	876	125	Tons	Rip Rap Class II (2'-0" Thick)
8622000000-E	876	140	SY	Geotextile For Drainage
8657000000-N	430	1	LS	Elastomeric Bearings
8763000000-E	430	540	LF	3'-0" X 2'-0" Prestressed Concrete Slab Unit
8860000000-N	SP	1	LS	Vibration Monitoring

5/28/99

$$$$$$SYSTIME$$$$$
$$$$$$$$$$$DGN$$$$$$$$$$$$$$$$
$$$$USERNAME$$$$

COMPUTED BY: WCC DATE: 12-21-12
CHECKED BY: RMS DATE: 12-21-12

STATE OF NORTH CAROLINA
DIVISION OF HIGHWAYS

PROJECT REFERENCE NO.	SHEET NO.
BD-5114Q	3-A

RIGHT OF WAY AREA DATA

PARCEL NO.	PROPERTY OWNERS NAMES	TOTAL ACREAGE	AREA TAKEN (sf)	AREA REMAINING RT. (Acre)	AREA REMAINING LT. (Acre)	CONST. EASE. (sf)	PERM. UTIL. EASE. (sf)	TEMP. DRAIN. EASE. (sf)
2	BUDDY E. PARRIS	0.464	673		0.449			
3	RONNIE & VICKIE HARLESS	0.273		0.273			243	
4	JUSTIN D. COCHRAN	2.830	1558	2.794		104		
5	JESSE NEIL AMMONS	0.414	7750		0.236			
	JOHN VANOSTENBRIDGE						994	

PAVEMENT REMOVAL SUMMARY

IN SQUARE YARDS

LINE	LOCATION	ASPHALT REMOVAL	ASPHALT BREAK–UP	CONCRETE REMOVAL	CONCRETE REMOVAL
–L–	11+60.00 TO 13+01.28	247			
–L–	13+36.70 TO 14+12.22	173			
	TOTAL	420			

Approximate quantities only. Unclassified excavation, borrow excavation, fine grading, clearing and grubbing, and removal of existing pavement will be paid for at the contract lump sum price for "grading".

NOTE: Invert Elevations are for Bid Purposes only and shall not be used for project construction stakeout. See "Standard Specifications For Roads and Structures, Section 300–5".

SUB–REGIONAL & REGIONAL LIST OF PIPES, ENDWALLS, ETC. (FOR PIPES 48" & UNDER)

STATION / SIZE / THICKNESS OR GAUGE	LOCATION (LT,RT, OR CL)	STRUCTURE NO. FROM	STRUCTURE NO. TO	TOP ELEVATION	INVERT ELEVATION	INVERT ELEVATION	SLOPE CRITICAL	DRAINAGE PIPE (RCP, CSP, CAAP, HDPE, or PVC) 12"	15"	18"	24"	30"	36"	42"	48"	DO NOT USE RCP	DO NOT USE CSP	DO NOT USE CAAP	DO NOT USE HDPE	C.S. PIPE 12" .064	15" .064	18" .064	24" .064	36" .079	42" .109	48" .109	R.C. PIPE (CLASS III) 15"	18"	24"	30"	36"	42"	48"	R.C. PIPE (CLASS IV) 12"	15"	18"	24"	30"	36"	42"	48"	**" R. C. PIPE (CLASS V)	**" R. C. PIPE CULVERTS, CONTRACTOR DESIGN PIPE	**" R. C. PIPE CULVERTS, CONTRACTOR DESIGN PIPE	15" SIDE DRAIN PIPE	18" SIDE DRAIN PIPE	ENDWALLS STD. 838.01, STD. 838.11 OR STD. 838.80 (UNLESS NOTED OTHERWISE) CU. YDS. R.C.P.	C.S.P.	QUANTITIES FOR DRAINAGE STRUCTURES PER EACH (0' THRU 5.0')	* TOTAL L.F. FOR PAY QUANTITY SHALL BE COL. 'A' + (1.3 X COL.'B') LIN. *FT. A 5.0' THRU 10.0'	B 10.0' AND ABOVE	C.B. STD. 840.01 OR STD. 840.02	FRAME, GRATES AND HOOD STANDARD 840.03 TYPE OF GRATE E	F	G		CONCRETE TRANSITIONAL SECTION CATCH BASIN	DROP INLET	T.B.D.I. STD. 840.36	T.B.D.I. FRAME WITH TWO GRATES STD. 840.37					CORR. STEEL ELBOWS NO. & SIZE	CONC. COLLARS CL. "B" C.Y. STD 840.72	CONC. & BRICK PIPE PLUG, C.Y. STD. 840.71	PIPE REMOVAL LIN.FT.	REMARKS
–L– 12+05	LT	401	402		1924.4	1919.85																					32																																										20	
–L– 12+20	LT	402		1922.60	1919.85																																												1										1	1									
–L– 12+50	LT	402	403		1919.85	1914.94																													56																																		
–L– 12+78	RT	403		1916.86	1914.94																																												1										1	1									
–L– 12+81	LT–RT	403	404		1914.94	1914.60																													40																																30	
–L– 13+59	LT	405		1914.16	1911.41																																												1										1	1									
–L– 13+59	LT	405	406		1911.41	1909.0														20																																																	
TOTAL																					20						32								96														3										3	3								50	

ABBREVIATIONS

C.B.	CATCH BASIN
N.D.I.	NARROW DROP INLET
D.I.	DROP INLET
G.D.I.	GRATED DROP INLET
G.D.I. (N.S.)	GRATED DROP INLET (NARROW SLOT)
J.B.	JUNCTION BOX
M.H.	MANHOLE
T.B.D.I.	TRAFFIC BEARING DROP INLET
T.B.J.B.	TRAFFIC BEARING JUNCTION BOX

"N" = DISTANCE FROM EDGE OF LANE TO FACE OF GUARDRAIL.
TOTAL SHOULDER WIDTH = DISTANCE FROM EDGE OF TRAVEL LANE TO SHOULDER BREAK POINT.
FLARE LENGTH = DISTANCE FROM LAST SECTION OF PARALLEL GUARDRAIL TO END OF GUARDRAIL.
W = TOTAL WIDTH OF FLARE FROM BEGINNING OF TAPER TO END OF GUARDRAIL.
G = GATING IMPACT ATTENUATOR TYPE 350
NG = NON–GATING IMPACT ATTENUATOR TYPE 350

GUARDRAIL SUMMARY

SURVEY LINE	BEG. STA.	END STA.	LOCATION	LENGTH STRAIGHT	LENGTH SHOP CURVED	LENGTH DOUBLE FACED	WARRANT POINT APPROACH END	WARRANT POINT TRAILING END	"N" DIST. FROM E.O.L.	TOTAL SHOUL. WIDTH	FLARE LENGTH APPROACH END	FLARE LENGTH TRAILING END	W APPROACH END	W TRAILING END	ANCHORS XI MOD	XI	GRAU 350	M–350	TYPE III	TYPE III SHOP CURVED	B–77	BIC	AT–1	IMPACT ATTENUATOR TYPE 350 EA	G	NG	SINGLE FACED GUARDRAIL	REMOVE EXISTING GUARDRAIL	REMOVE AND STOCKPILE EXISTING GUARDRAIL	REMARKS
–L–	12+12.95	12+94.16	LT	81.25			12+94.16		4	6		50		1			1		1											
–L–	12+73.69	12+87.51	RT	6.25	18.75			12+87.51	2	6										1			1							
–L– & –Y–	13+49.84 (–L–)	13+36.30 (–Y–)	RT	87.5	31.25		13+49.84 (–L–)		3	6		50		1			1		1											
–L– & –Y–	13+56.49 (–L–)	11+66.86 (–Y–)	LT	81.25	37.5			13+56.49 (–L–)	3	6	50			1			1		1											
			SUBTOTAL	256.25	87.5												3		3	1			1							
			GRAU–350 3 @ 50'=	–150																										
			TYPE III 3 @ 18.75'=	–56.25																										
			TYPE III 1 @ 18.75'=		–18.75																									
			AT–1 1 @ 6.25'=	–6.25																										
			PROJECT TOTALS:	43.75	68.75																									
			ADDITIONAL GUARDRAIL POSTS=5 EA.																											

$$$$$$SYSTIME$$$$$ $$$$$$$DGN$$$$$$$$$$$$$$$$ $$$$$USERNAME$$$$$

COMPUTED BY: CBC DATE: 10-19-11
CHECKED BY: RMS DATE: 10-19-11

PROJECT REFERENCE NO.	SHEET NO.
BD-5114Q	3-B

DIVISION OF HIGHWAYS
STATE OF NORTH CAROLINA

SUMMARY OF EARTHWORK

IN CUBIC YARDS

LOCATION	UNCLASSIFIED EXCAVATION	UNDERCUT	EMBT+%	BORROW	WASTE
SUMMARY NO.1					
-L- STA. 11+60.00 TO STA. 12+90.84 (BEG. BRIDGE)	70		41		29
SUBTOTAL SUMMARY NO.1	70		41		29
SUMMARY NO.2					
-L- STA. 13+53.17 (END BRIDGE) TO STA. 14+12.22	32		156	124	
SUBTOTAL SUMMARY NO.2	32		156	124	
PROJECT SUBTOTAL	102		197	124	29
WASTE IN LIEU OF BORROW				-29	-29
EST.5% FOR REPLACING TOP SOIL ON BORROW PITS				5	
GRAND TOTAL	102		197	100	
SAY	105			210*	105*

CONTINGENCY ITEMS:

INCIDENTAL STONE = 50 TONS

UNDERCUT EXCAVATION = 50 CY

SELECT GRANULAR MATERIAL = 50 CY

CLASS IV SUBGRADE STABILIZATION = 50 TONS

GEOTEXTILE FOR SOIL STABILIZATION = 50 SY

* NEEDED FOR PHASE CONSTRUCTION

Approximate quantities only. Unclassified excavation, borrow excavation, fine grading, clearing and grubbing, and removal of existing pavement will be paid for at the contract lump sum price for "grading".

PROJECT REFERENCE NO.	SHEET NO.
BD-5114Q	4
R/W SHEET NO.	
ROADWAY DESIGN ENGINEER	HYDRAULICS ENGINEER

NORTH CAROLINA PROFESSIONAL SEAL 26960 ENGINEER BRUCE M. ROBINSON
4/29/2013

NORTH CAROLINA PROFESSIONAL SEAL 18452 ENGINEER JAMES C. DAVIS
4/29/13

V&M
Vaughn & Melton
Consulting Engineers
Asheville, North Carolina 828-253-2796
Charlotte, North Carolina 704-357-0488
Tri-Cities, Tennessee 423-467-8401
Knoxville, Tennessee 865-546-5800
Middlesboro, Kentucky 606-248-6600
Spartanburg, South Carolina 864-574-4775

Copyright© 1994 Vaughn & Melton, Inc. All Rights Reserved

DATUM DESCRIPTION

THE LOCALIZED COORDINATE SYSTEM DEVELOPED FOR THIS PROJECT IS BASED ON THE STATE PLANE COORDINATES ESTABLISHED BY NCGS FOR MONUMENT "G102"
WITH NAD 83/NSRS 2007 STATE PLANE GRID COORDINATES OF
NORTHING: 636464.459(ft) EASTING: 698311.998(ft)
ELEVATION: 1923.74(ft)
THE AVERAGE COMBINED GRID FACTOR USED ON THIS PROJECT (GROUND TO GRID) IS: 0.999789594
THE N.C. LAMBERT GRID BEARING AND LOCALIZED HORIZONTAL GROUND DISTANCE FROM "G102" TO -L- 1 STATION 10+00 IS
N 80°15'12" W 232.23'
ALL LINEAR DIMENSIONS ARE LOCALIZED HORIZONTAL DISTANCES
VERTICAL DATUM USED IS NAVD 88

BL-1	N 636504.7941	E 697932.4390	ELEV 1965.02
BL-2	N 636503.0778	E 698217.5607	ELEV 1932.02
BL-3	N 636530.6701	E 698473.6436	ELEV 1915.44

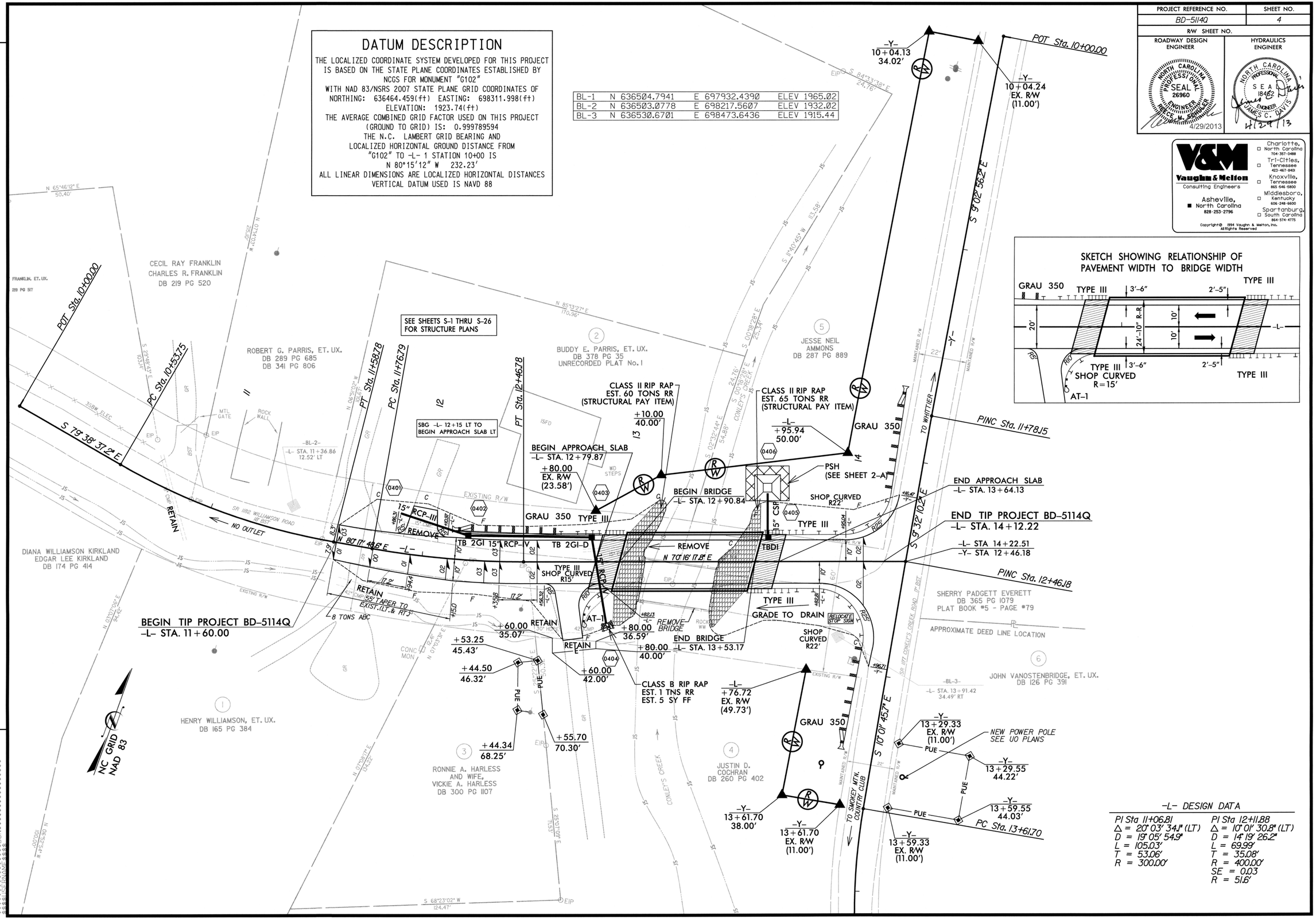

-L- DESIGN DATA

PI Sta 11+06.81	PI Sta 12+11.88
Δ = 20° 03' 34.1" (LT)	Δ = 10° 01' 30.8" (LT)
D = 19° 05' 54.9"	D = 14° 19' 26.2"
L = 105.03'	L = 69.99'
T = 53.06'	T = 35.08'
R = 300.00'	R = 400.00'
	SE = 0.03
	R = 51.6'

REVISIONS

$$$$SYSTIME$$$$
$$$$FILENAME$$$$

5/14/99

-L-

V&M
Vaughn & Melton
Consulting Engineers
Asheville, North Carolina 828·253·2796
Charlotte, North Carolina 704·357·0488
Tri-Cities, Tennessee 423·467·8401
Knoxville, Tennessee 865·546·5800
Middlesboro, Kentucky 606·248·6600
Spartanburg, South Carolina 864·574·4775
Copyright © 1994 Vaughn & Melton, Inc. All Rights Reserved

PROJECT REFERENCE NO.	SHEET NO.
BD-5114Q	5
ROADWAY DESIGN ENGINEER	HYDRAULICS ENGINEER
NORTH CAROLINA PROFESSIONAL SEAL 26960 ENGINEER REECE M. SCHULER 4/29/2013	NORTH CAROLINA PROFESSIONAL SEAL 18462 ENGINEER JAMES C. DAVIS 4/29/13

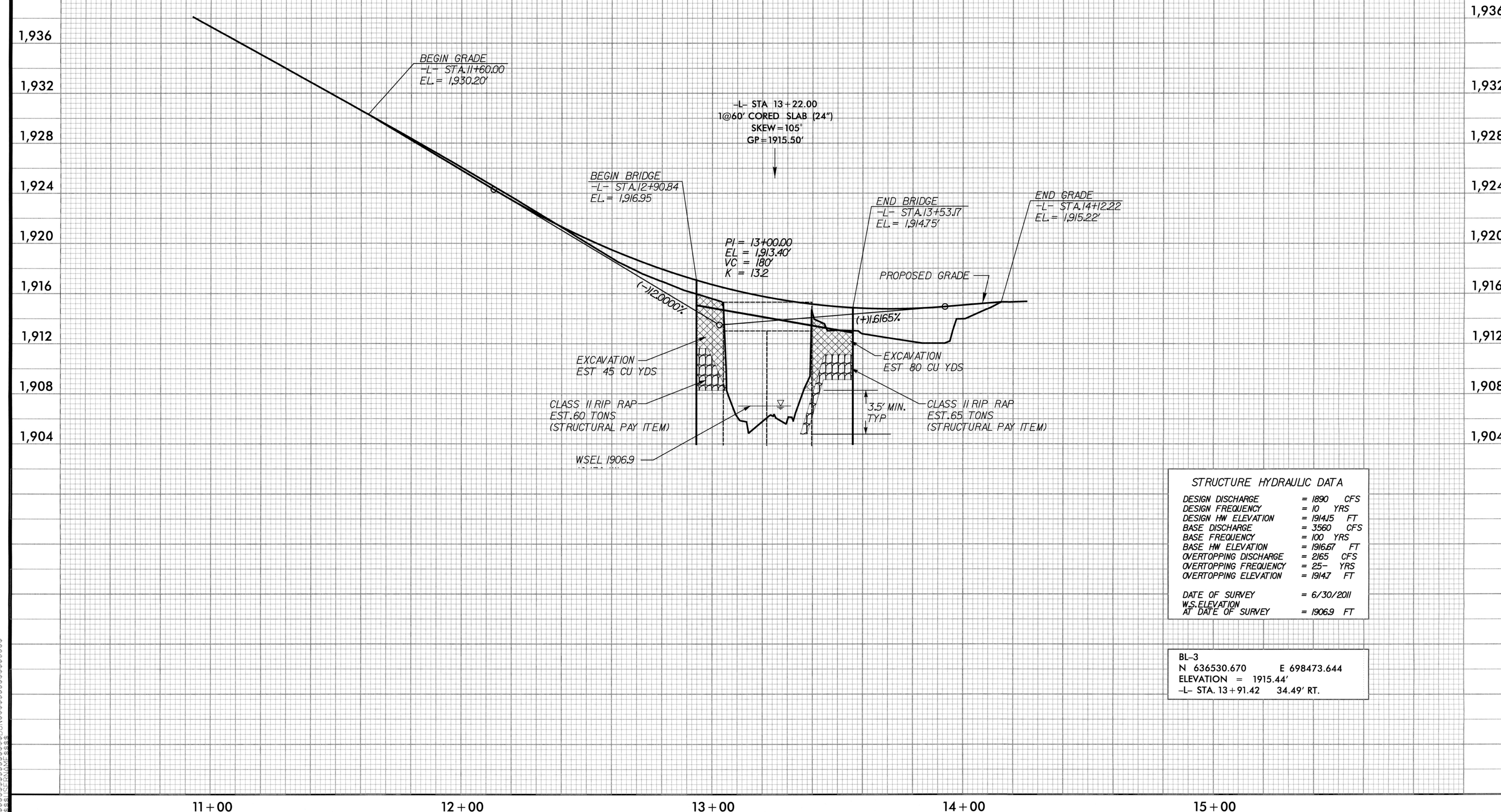

STRUCTURE HYDRAULIC DATA

DESIGN DISCHARGE	= 1890 CFS
DESIGN FREQUENCY	= 10 YRS
DESIGN HW ELEVATION	= 1914.15 FT
BASE DISCHARGE	= 3560 CFS
BASE FREQUENCY	= 100 YRS
BASE HW ELEVATION	= 1916.67 FT
OVERTOPPING DISCHARGE	= 2165 CFS
OVERTOPPING FREQUENCY	= 25- YRS
OVERTOPPING ELEVATION	= 1914.7 FT
DATE OF SURVEY	= 6/30/2011
W.S.ELEVATION AT DATE OF SURVEY	= 1906.9 FT

BL-3
N 636530.670 E 698473.644
ELEVATION = 1915.44'
-L- STA. 13+91.42 34.49' RT.

$$$$$$SYSTIME$$$$$
$$$$$$$$$$$DGN$$$$$$$$$$$$$$$$
$$$$USERNAME$$$$

STATE OF NORTH CAROLINA
DIVISION OF HIGHWAYS

TRANSPORTATION MANAGEMENT PLAN

SWAIN COUNTY

DIVISION 14

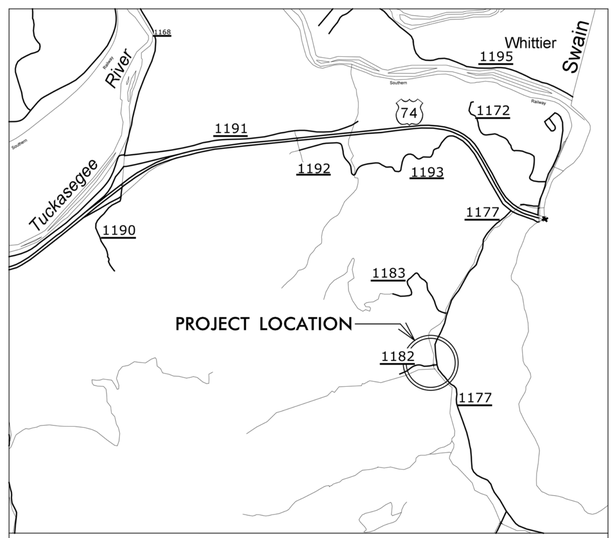

VICINITY MAP

LOCATION: BRIDGE NO. 151 OVER CONLEYS CREEK ON SR 1182 (WILLIAMSON ROAD)

INDEX OF SHEETS

SHEET NO.	TITLE
TMP-1	TITLE SHEET, AND INDEX OF SHEETS
TMP-1A	LIST OF APPLICABLE ROADWAY STANDARD DRAWINGS, LEGEND, AND TEMPORARY PAVEMENT MARKING
TMP-1B	TRANSPORTATION OPERATIONS PLAN: (MANAGEMENT STRATEGIES, GENERAL NOTES AND LOCAL NOTES)
TMP-2	TEMPORARY TRAFFIC CONTROL PHASING
TMP-3	TEMPORARY TRAFFIC CONTROL PHASING I DETAIL
TMP-4	TEMPORARY TRAFFIC CONTROL PHASE II DETAIL
SIG-1	TEMPORARY TRAFFIC SIGNAL PLAN
PM-1	PAVEMENT MARKING PLAN

SHEET NO.
TMP-1

TIP PROJECT: BD-5114Q

WORK ZONE SAFETY & MOBILITY
"from the MOUNTAINS to the COAST"

N.C.D.O.T. WORK ZONE TRAFFIC CONTROL
1580 MAIL SERVICE CENTER (MSC) RALEIGH, NC 27699-1580
1020 BIRCH RIDGE DRIVE, RALEIGH, NC 27610 (DELIVERY)
PHONE: (919) 250-4094 FAX: (919) 250-4098

J. S. BOURNE, P.E. — STATE TRAFFIC MANAGEMENT ENGINEER
LLOYD D. BROWN, P.E. — TRAFFIC CONTROL PROJECT ENGINEER
AARON CARVER, P.E. — TRAFFIC CONTROL PROJECT DESIGN ENGINEER
AARON CARVER, P.E. — TRAFFIC CONTROL DESIGN ENGINEER

DIVISION OF HIGHWAYS · STATE OF NORTH CAROLINA · DEPARTMENT OF TRANSPORTATION · WORK ZONE TRAFFIC CONTROL

V&M Vaughn & Melton
Consulting Engineers
Asheville, North Carolina 828-253-2796
Charlotte, North Carolina 704-357-0488

Copyright © 2006 Vaughn & Melton, Inc.
All Rights Reserved

PROJECT ENGINEER: LLOYD D. BROWN, P.E.
DESIGN ENGINEER: AARON CARVER, P.E.

APPROVED: _____
DATE: _____

SEAL
NORTH CAROLINA PROFESSIONAL SEAL 20119 ENGINEER LLOYD D. BROWN
4/29/2013

$$$$$SYSTIME$$$$$
$$$$$$$$$$$$$$$$$$$$DGN$$$$$$$$$$$$$$$$$$
$$$$$USERNAME$$$$

PROJ. REFERENCE NO.	SHEET NO.
BD5114-Q	TMP-1A

ROADWAY STANDARD DRAWINGS

THE FOLLOWING ROADWAY STANDARDS AS SHOWN IN "ROADWAY STANDARD DRAWINGS" - PROJECT SERVICES UNIT - N.C. DEPARTMENT OF TRANSPORTATION - RALEIGH, N.C., DATED JANUARY 2012 ARE APPLICABLE TO THIS PROJECT AND BY REFERENCE HEREBY ARE CONSIDERED A PART OF THESE PLANS:

STD. NO.	TITLE
1101.01	WORK ZONE ADVANCE WARNING SIGNS
1101.02	TEMPORARY LANE CLOSURES
1101.03	TEMPORARY ROAD CLOSURES
1101.04	TEMPORARY SHOULDER CLOSURES
1101.05	WORK ZONE VEHICLE ACCESSES
1101.11	TRAFFIC CONTROL DESIGN TABLES
1110.01	STATIONARY WORK ZONE SIGNS
1110.02	PORTABLE WORK ZONE SIGNS
1115.01	FLASHING ARROW PANELS
1130.01	DRUMS
1135.01	CONES
1145.01	BARRICADES
1150.01	FLAGGING DEVICES
1160.01	TEMPORARY CRASH CUSHION
1165.01	TRUCK MOUNTED IMPACT ATTENUATOR
1170.01	PORTABLE CONCRETE BARRIER
1180.01	SKINNY-DRUM
1205.01	PAVEMENT MARKINGS - LINE TYPES & OFFSETS
1205.04	PAVEMENT MARKINGS - INTERSECTIONS
1205.08	PAVEMENT MARKINGS - SYMBOLS & WORD MESSAGES
1205.12	PAVEMENT MARKINGS - BRIDGES
1261.01	GUARDRAIL & BARRIER DELINEATOR SPACING
1261.02	GUARDRAIL & BARRIER DELINEATOR TYPES
1262.01	GUARDRAIL END DELINEATION

LEGEND

GENERAL

- DIRECTION OF TRAFFIC FLOW
- DIRECTION OF PEDESTRIAN TRAFFIC FLOW
- EXIST. PVMT.
- NORTH ARROW
- PROPOSED PVMT.
- WORK AREA
- TEMPORARY PAVEMENT

TEMPORARY PAVEMENT MARKING

SYMBOL	DESCRIPTION
	PAINT
PA	WHITE EDGE LINE (4")
PI	YELLOW DOUBLE CENTER (4")
P4	STOP BAR TAPE (24"WHITE)
T4	STOP BAR TAPE (24"WHITE)

TRAFFIC CONTROL DEVICES

- BARRICADE (TYPE III)
- CONE
- DRUM SKINNY DRUM TUBULAR MARKER
- TEMPORARY CRASH CUSHION
- FLASHING ARROW PANEL (TYPE C)
- FLAGGER
- LAW ENFORCEMENT
- TRUCK MOUNTED IMPACT ATTENUATOR (TMIA)
- CHANGEABLE MESSAGE SIGN

TEMPORARY SIGNING

- PORTABLE SIGN
- STATIONARY SIGN
- STATIONARY OR PORTABLE SIGN

SIGNALS

EXISTING PROPOSED TEMPORARY

PORTABLE TRAFFIC SIGNAL

PAVEMENT MARKINGS

- EXISTING LINES
- TEMPORARY LINES

PAVEMENT MARKING SYMBOLS

PAVEMENT MARKING SYMBOLS

Vaughn & Melton
Consulting Engineers
Asheville, North Carolina
828-253-2796
Charlotte, North Carolina 704-357-0488
Tri-Cities, Tennessee 423-467-8401
Knoxville, Tennessee 865-546-5800
Middlesboro, Kentucky 606-248-6600
Spartanburg, South Carolina 864-574-4775
Atlanta, Georgia 770 627-3590

Copyright © 2006 Vaughn & Melton, Inc. All Rights Reserved

APPROVED:_____ DATE:_____

SEAL

NORTH CAROLINA PROFESSIONAL SEAL 20119 ENGINEER DAVID T. BROWN

4/29/2013

DIVISION OF HIGHWAYS STATE OF NORTH CAROLINA DEPARTMENT OF TRANSPORTATION WORK ZONE TRAFFIC CONTROL

ROADWAY STANDARD DRAWINGS & LEGEND

$$$$$$SYSTIME$$$$$
$$$$$$$$$$$$$$$$DGN$$$$$$$$$$$$$$$$$$$$
$$$USERNAME$$$

PROJ. REFERENCE NO.	SHEET NO.
BD5114-Q	TMP-1B

GENERAL NOTES / LOCAL NOTES

CHANGES MAY BE REQUIRED WHEN PHYSICAL DIMENSIONS IN THE DETAIL DRAWINGS, STANDARD DETAILS, AND ROADWAY DETAILS ARE NOT ATTAINABLE TO MEET FIELD CONDITIONS OR RESULT IN DUPLICATE OR UNDESIRED OVERLAPPING OF DEVICES. MODIFICATION MAY INCLUDE: MOVING, SUPPLEMENTING, COVERING, OR REMOVAL OF DEVICES AS DIRECTED BY THE ENGINEER.

THE FOLLOWING GENERAL NOTES APPLY AT ALL TIMES FOR THE DURATION OF THE CONSTRUCTION PROJECT EXCEPT WHEN OTHERWISE NOTED IN THE PLAN OR DIRECTED BY THE ENGINEER.

LANE AND SHOULDER CLOSURE REQUIREMENTS

A) REMOVE LANE CLOSURE DEVICES FROM THE LANE WHEN WORK IS NOT BEING PERFORMED BEHIND THE LANE CLOSURE OR WHEN A LANE CLOSURE IS NO LONGER NEEDED OR AS DIRECTED BY THE ENGINEER.

B) WHEN PERSONNEL AND/OR EQUIPMENT ARE WORKING WITHIN 15 FT OF AN OPEN TRAVEL LANE, CLOSE THE NEAREST OPEN SHOULDER USING ROADWAY STANDARD DRAWING NO. 1101.04 UNLESS THE WORK AREA IS PROTECTED BY BARRIER OR GUARDRAIL OR A LANE CLOSURE IS INSTALLED.

C) WHEN PERSONNEL AND/OR EQUIPMENT ARE WORKING ON THE SHOULDER ADJACENT TO AN UNDIVIDED FACILITY AND WITHIN 5 FT OF AN OPEN TRAVEL LANE, CLOSE THE NEAREST OPEN TRAVEL LANE USING ROADWAY STANDARD DRAWING NO. 1101.02 UNLESS THE WORK AREA IS PROTECTED BY BARRIER OR GUARDRAIL.

WHEN PERSONNEL AND/OR EQUIPMENT ARE WORKING ON THE SHOULDER ADJACENT TO A DIVIDED FACILITY AND WITHIN 10 FT OF AN OPEN TRAVEL LANE, CLOSE THE NEAREST OPEN TRAVEL LANE USING ROADWAY STANDARD DRAWING NO. 1101.02 UNLESS THE WORK AREA IS PROTECTED BY BARRIER OR GUARDRAIL.

D) WHEN PERSONNEL AND/OR EQUIPMENT ARE WORKING WITHIN A LANE OF TRAVEL OF AN UNDIVIDED OR DIVIDED FACILITY, CLOSE THE LANE ACCORDING TO THE TRAFFIC CONTROL PLANS, ROADWAY STANDARD DRAWINGS, OR AS DIRECTED BY THE ENGINEER. CONDUCT THE WORK SO THAT ALL PERSONNEL AND/OR EQUIPMENT REMAIN WITHIN THE CLOSED TRAVEL LANE.

E) DO NOT WORK SIMULTANEOUSLY WITHIN 15 FT ON BOTH SIDES OF AN OPEN TRAVELWAY, RAMP, OR LOOP WITHIN THE SAME LOCATION UNLESS PROTECTED WITH GUARDRAIL OR BARRIER.

PAVEMENT EDGE DROP OFF REQUIREMENTS

F) BACKFILL AT A 6:1 SLOPE UP TO THE EDGE AND ELEVATION OF EXISTING PAVEMENT IN AREAS ADJACENT TO AN OPENED TRAVEL LANE THAT HAS AN EDGE OF PAVEMENT DROP-OFF AS FOLLOWS:

BACKFILL DROP-OFFS THAT EXCEED 2 INCHES ON ROADWAYS WITH POSTED SPEED LIMITS OF 45 MPH OR GREATER.

BACKFILL DROP-OFFS THAT EXCEED 3 INCHES ON ROADWAYS WITH POSTED SPEED LIMITS LESS THAN 45 MPH.

BACKFILL WITH SUITABLE COMPACTED MATERIAL, AS APPROVED BY THE ENGINEER, AT NO EXPENSE TO THE DEPARTMENT.

G) DO NOT EXCEED A DIFFERENCE OF 2 INCHES IN ELEVATION BETWEEN OPEN LANES OF TRAFFIC FOR NOMINAL LIFTS OF 1.5 INCHES. INSTALL ADVANCE WARNING "UNEVEN LANES" SIGNS (W8-11) IN ADVANCE AND A MINIMUM OF EVERY HALF MILE THROUGHOUT THE UNEVEN AREA.

TRAFFIC PATTERN ALTERATIONS

H) NOTIFY THE ENGINEER TWENTY ONE (21) CALENDAR DAYS PRIOR TO ANY TRAFFIC PATTERN ALTERATION.

SIGNING

I) INSTALL ADVANCE WORK ZONE WARNING SIGNS WHEN WORK IS WITHIN 40 FT FROM THE EDGE OF TRAVEL LANE AND NO MORE THAN THREE (3) DAYS PRIOR TO THE BEGINNING OF CONSTRUCTION.

J) ENSURE ALL NECESSARY SIGNING IS IN PLACE PRIOR TO ALTERING ANY TRAFFIC PATTERN.

K) INSTALL BLACK ON ORANGE "DIP" SIGNS (W8-2) AND/OR "BUMP" SIGNS (W8-1) 100 ft IN ADVANCE OF THE UNEVEN AREA, OR AS DIRECTED BY THE ENGINEER.

TRAFFIC BARRIER

L) INSTALL TEMPORARY BARRIER ACCORDING TO THE TRANSPORTATION MANAGEMENT PLANS A MAXIMUM OF TWO (2) WEEKS PRIOR TO BEGINNING WORK IN ANY LOCATION. ONCE TEMPORARY BARRIER IS INSTALLED AT ANY LOCATION PROCEED IN A CONTINUOUS MANNER TO COMPLETE THE PROPOSED WORK IN THAT LOCATION UNLESS OTHERWISE STATED IN THE TRANSPORTATION MANAGEMENT PLANS OR AS DIRECTED BY THE ENGINEER.

DO NOT PLACE BARRIER DIRECTLY ON ANY SURFACE OTHER THAN ASPHALT OR CONCRETE.

ONCE TEMPORARY BARRIER IS INSTALLED AT ANY LOCATION AND NO WORK IS PERFORMED BEHIND THE TEMPORARY BARRIER FOR A PERIOD LONGER THAN TWO (2) MONTHS, REMOVE / RESET TEMPORARY BARRIER AT NO COST TO THE DEPARTMENT UNLESS OTHERWISE STATED IN THE TRANSPORTATION MANAGEMENT PLANS, TEMPORARY BARRIER IS PROTECTING A HAZARD, OR AS DIRECTED BY THE ENGINEER.

INSTALL TEMPORARY BARRIER WITH THE TRAFFIC FLOW BEGINNING WITH THE UPSTREAM SIDE OF TRAFFIC. REMOVE TEMPORARY BARRIER AGAINST THE TRAFFIC FLOW BEGINNING WITH THE DOWNSTREAM SIDE OF TRAFFIC.

INSTALL AND SPACE DRUMS NO GREATER THAN TWICE THE POSTED SPEED LIMIT (MPH) TO CLOSE OR KEEP THE SECTION OF THE ROADWAY CLOSED UNTIL THE TEMPORARY BARRIER CAN BE PLACED OR AFTER THE TEMPORARY BARRIER IS REMOVED.

M) PROTECT THE APPROACH END OF MOVABLE/PORTABLE CONCRETE BARRIER AT ALL TIMES DURING THE INSTALLATION AND REMOVAL OF THE BARRIER BY EITHER A TRUCK MOUNTED ATTENUATOR (MAXIMUM 72 HOURS) OR A TEMPORARY CRASH CUSHION.

PROTECT THE APPROACH END OF MOVABLE/PORTABLE CONCRETE BARRIER FROM ONCOMING TRAFFIC AT ALL TIMES BY A TEMPORARY CRASH CUSHION UNLESS THE APPROACH END OF MOVABLE/PORTABLE CONCRETE BARRIER IS OFFSET FROM ONCOMING TRAFFIC AS FOLLOWS OR AS SHOWN IN THE PLANS: (SEE ALSO 1101.05)

POSTED SPEED LIMIT	MINIMUM OFFSET
40 OR LESS	15 FT
45 - 50	20 FT
55	25 FT
60 MPH or HIGHER	30 FT

LOCAL NOTES:

1) EMERGENCY VEHICLE ACCESS MUST BE MAINTAINED AT ALL TIMES.

2) NOTIFY THE SWAIN COUNTY SCHOOL BOARD 30 DAYS BEFORE ANY LANE CLOSURES.

TRAFFIC CONTROL DEVICES

N) WHEN LANE CLOSURES ARE NOT IN EFFECT SPACE CHANNELIZING DEVICES IN WORK AREAS NO GREATER IN FEET THAN TWICE THE POSTED SPEED LIMIT (MPH) EXCEPT, 10 FT ON-CENTER IN RADII, AND 3 FT OFF THE EDGE OF AN OPEN TRAVELWAY. REFER TO STANDARD SPECIFICATIONS FOR ROADS AND STRUCTURES SECTIONS 1130 (DRUMS), 1135 (CONES) AND 1180 (SKINNY DRUMS) FOR ADDITIONAL REQUIREMENTS.

O) PLACE TYPE III BARRICADES, WITH "ROAD CLOSED" SIGN R11-2 ATTACHED, OF SUFFICIENT LENGTH TO CLOSE ENTIRE ROADWAY.

PAVEMENT MARKINGS

P) INSTALL TEMPORARY PAVEMENT MARKINGS ON INTERIM LAYERS OF PAVEMENT AS FOLLOWS:

ROAD NAME	MARKING	MARKER
SR 1182 (WILLIAMSON ROAD)	PAINT/TAPE	NONE
SR 1177 (CONLEY'S CREEK ROAD)	PAINT/TAPE	NONE

Q) PLACE ONE APPLICATION OF PAINT FOR TEMPORARY TRAFFIC PATTERNS. PLACE A SECOND APPLICATION OF PAINT SIX (6) MONTHS AFTER THE INITIAL APPLICATION AND EVERY SIX MONTHS AS DIRECTED BY THE ENGINEER.

R) TIE PROPOSED PAVEMENT MARKING LINES TO EXISTING PAVEMENT MARKING LINES.

S) REMOVE/REPLACE ANY CONFLICTING/DAMAGED PAVEMENT MARKINGS BY THE END OF EACH DAY'S OPERATION.

MISCELLANEOUS

T) IN THE EVENT A TIE-IN CANNOT BE MADE IN ONE DAY'S TIME, BRING THE TIE-IN AREA TO AN APPROPRIATE ROADWAY ELEVATION AS DETERMINED BY THE ENGINEER. PLACE BLACK ON ORANGE "LOOSE GRAVEL" SIGNS (W8-7) AND BLACK ON ORANGE "PAVEMENT ENDS" SIGNS (W8-3) 100 ft AND 200 ft RESPECTIVELY IN ADVANCE OF THE UNEVEN AREAS. USE DRUMS TO DELINEATE THE EDGE OF ROADWAY ALONG UNPAVED AREAS.

MANAGEMENT STRATEGIES

TRAFFIC WILL BE MAINTAINED ON THE EXISTING ROAD, BUT REDUCED TO ONE LANE USING TEMPORARY SIGNALS AND PAVEMENT MARKINGS AS NEW ALIGNMENT IS CONSTRUCTED.
PHASE 2 SHOWS TRAFFIC SHIFTED TO ONE LANE ON THE NEW ALIGNMENT USING TEMPORARY SIGNALS AND PAVEMENT MARKINGS WHILE THE REMAINDER IS CONSTRUCTED. A FLAGGING OPERATION WILL BE USED TO CONSTRUCT THE NEW TIE-INS.

APPROVED:_____ DATE:_____

SEAL

NORTH CAROLINA PROFESSIONAL SEAL 20119 ENGINEER ELMER ED. BROWN III

4/29/2013

DIVISION OF HIGHWAYS STATE OF NORTH CAROLINA DEPARTMENT OF TRANSPORTATION WORK ZONE TRAFFIC CONTROL

TRANSPORTATION OPERATIONS PLAN
(MANAGEMENT STRATEGIES & GENERAL NOTES)

$$$$$$SYSTIME$$$$$
$$$$$$$$$$$$$$$$DGN$$$$$$$$$$$$$$$$$$$$
$$$$USERNAME$$$$

PROJ. REFERENCE NO.	SHEET NO.
BD5114-Q	TMP-2

PROJECT PHASING

PHASE I

STEP 1: - ERECT WORK ZONE ADVANCED WARNING SIGNS USING DETAIL DRAWINGS FOR WORK ZONE SIGNS. (SEE RDWY STD. 1101.01)

- INSTALL PORTABLE TRAFFIC SIGNALS AS REQUIRED IN THE SIGNAL PLANS (SEE SHEET SIG-1).

NOTE: STEP 2 SHALL BE COMPLETED IN A CONTINUOUS OPERATION.

STEP 2: USING RDWY STD 1101.02 SHEET 1 OF 15 AND FLAGGERS, PERFORM THE FOLLOWING ON SR 1182:

- REMOVE AS NECESSARY EXISTING PAVEMENT MARKINGS, AND PLACE TEMPORARY PAVEMENT MARKINGS (PAINT), FROM -L- STA. 11+60 +/- TO -L- STA. 14+12.22 +/-. (SEE TMP-3)

- ACTIVATE PORTABLE TRAFFIC SIGNALS AND DIRECT SR 1182 (WILLIAMSON ROAD) TRAFFIC INTO A ONE LANE,TWO WAY PATTERN IN THE EXISTING EASTBOUND LANE OF SR1182 (WILLIAMSON ROAD). (SEE TEMP-3).

- REMOVE EXISTING BRIDGE RAIL (LEFT SIDE), SAW CUT AND REMOVE LEFT SIDE OF EXISTING BRIDGE TO LIMIT SHOWN (SEE SECTION B-B, TMP-3 AND STRUCTURE PLANS STAGE 1) AND INSTALL TEMPORARY GUARDRAIL FROM -L- STA. 12+53 +/- TO -Y- STA. 12+25 +/-.(SEE TMP-3)

STEP 3: - REMOVE WESTBOUND SIDE OF EXISTING STRUCTURE (SEE STRUCTURE PLANS).

- INSTALL TEMPORARY SHORING AS FOLLOWS:

-INSTALL TEMPORARY SHORING NO. 1 BEHIND TEMPORARY GUARDRAIL FROM -L- STA. 12+79 +/- TO -L- STA. 13+03 +/-. (SEE TMP-3)

-INSTALL TEMPORARY SHORING NO. 2 BEHIND TEMPORARY GUARDRAIL FROM -L- STA. 13+35 +/- TO -L- STA. 13+55 +/-. (SEE TMP-3)

STEP 4: - CONSTRUCT -L- (SR 1182 WILLIAMSON ROAD) FROM STA 11+60 TO STA 14+12.22 WESTBOUND LANE EXCLUDING FINAL PAVEMENT LAYER.

- CONSTRUCT WESTBOUND PORTION OF THE STRUCTURE PER THE STRUCTURE PLANS STAGE 1.

PHASE II

NOTE: STEP 1 SHALL BE COMPLETED IN A CONTINUOUS OPERATION.

STEP 1: USING RDWY STD 1101.02 SHEET 1 OF 15 AND FLAGGERS, PERFORM THE FOLLOWING ON SR 1182:

- REMOVE, AS NECESSARY, PAVEMENT MARKINGS PLACED IN STEP 2, PHASE I AND PLACE TEMPORARY PAVEMENT MARKINGS (PAINT) FROM -L- STA. 11+60 +/- TO -Y- STA. 14+12.22+/-. (SEE TMP-4)

- INSTALL TEMPORARY GUARDRAIL FROM -L- STA. 12+54 +/- TO -Y- STA. 12+95 +/- (SEE SECTION DETAILS AND PLAN, TMP-4) AND REMOVE GUARDRAIL PLACED IN STEP 2, PHASE I.

- ACTIVATE PORTABLE TRAFFIC SIGNALS AND DIRECT SR 1182 (WILLIAMSON ROAD) TRAFFIC INTO A ONE LANE, TWO-WAY PATTERN IN THE WESTBOUND LANE OF SR 1182 (WILLIAMSON ROAD). (SEE TMP-4)

STEP 2: - REMOVE EASTBOUND SIDE OF EXISTING STRUCTURE (SEE STRUCTURE PLANS).

-- REMOVE TEMPORARY SHORING PLACED IN STEP 3, PHASE I.

STEP 3: - CONSTRUCT -L- (SR 1182 WILLIAMSON ROAD) FROM STA 11+60 TO STA 14+12.22 EASTBOUND LANE EXCLUDING FINAL PAVEMENT LAYER.

--CONSTRUCT STRUCTURES PER THE STRUCTURE PLANS STAGE 2.

--CONSTRUCT DR-1. MAINTAIN DRIVEWAY ACCESS THROUGHOUT CONSTRUCTION.

STEP 4: - USING RDWY STD 1101.02 SHEET 1 OF 15, CONSTRUCT GUARDRAIL, REMOVE TEMPORARY GUARDRAIL PLACED IN STEP 1, PHASE II, PLACE THE FINAL LAYER OF SURFACE COURSE, AND THE FINAL PAVEMENT MARKINGS (PAINT)(SEE PM-1) ON THE ENTIRE PROJECT.

STEP 5: - REMOVE ALL TEMPORARY TRAFFIC CONTROL DEVICES.

--OPEN SR 1182 (WILLIAMSON ROAD) TO 2-LANE, 2-WAY TRAFFIC.

V&M
Vaughn & Melton
Consulting Engineers
Asheville, North Carolina 828-253-2796
Charlotte, North Carolina 704-357-0488
Tri-Cities, Tennessee 423-467-8401
Knoxville, Tennessee 865-546-5800
Middlesboro, Kentucky 606-248-6600
Spartanburg, South Carolina 864-574-4775
Atlanta, Georgia 770 627-3590

Copyright © 2006 Vaughn & Melton, Inc. All Rights Reserved

APPROVED:_____ DATE:_____

SEAL

NORTH CAROLINA PROFESSIONAL SEAL 20119 ENGINEER ELTON W. BROWN

4/29/2013

DIVISION OF HIGHWAYS STATE OF NORTH CAROLINA DEPARTMENT OF TRANSPORTATION WORK ZONE TRAFFIC CONTROL

PHASING

$$$$$SYSTIME$$$$$
$$$$$$$$$$$$$$$$DGN$$$$$$$$$$$$$$$$$
$$$$USERNAME$$$$

PROJ. REFERENCE NO.	SHEET NO.
BD-5114Q	TMP-3

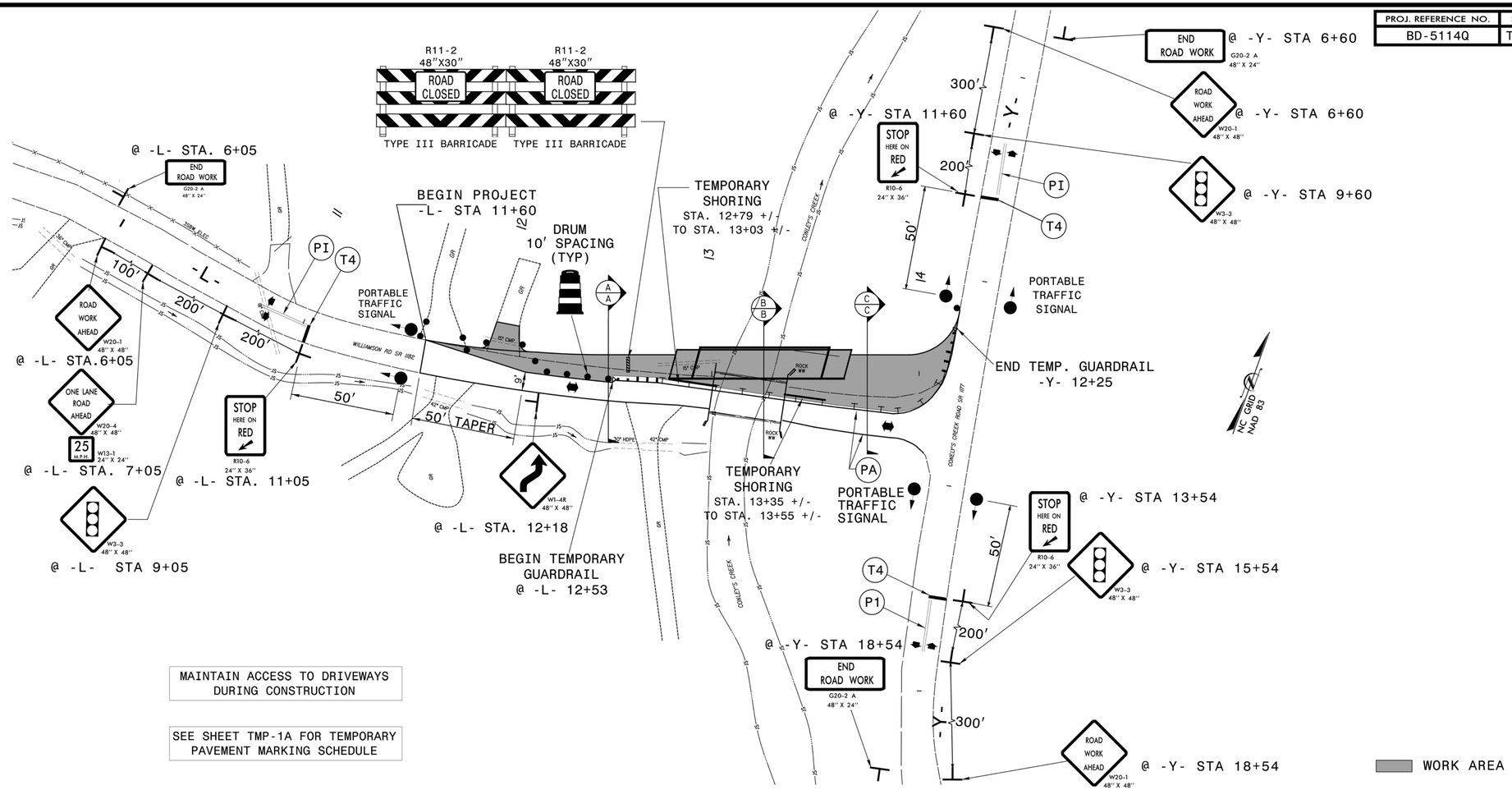

SECTION A-A

-L- STA 12+50

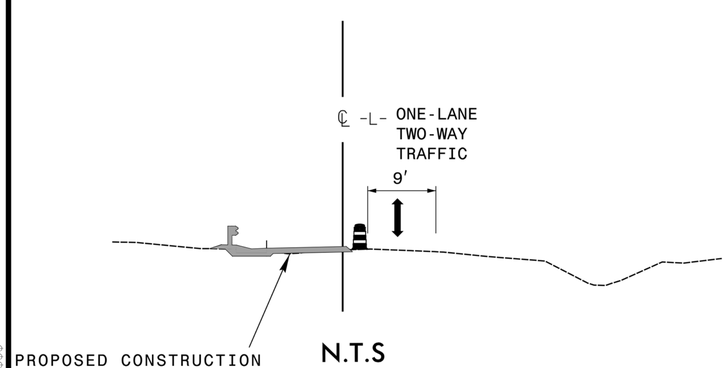

SECTION B-B

-L- STA 13+25

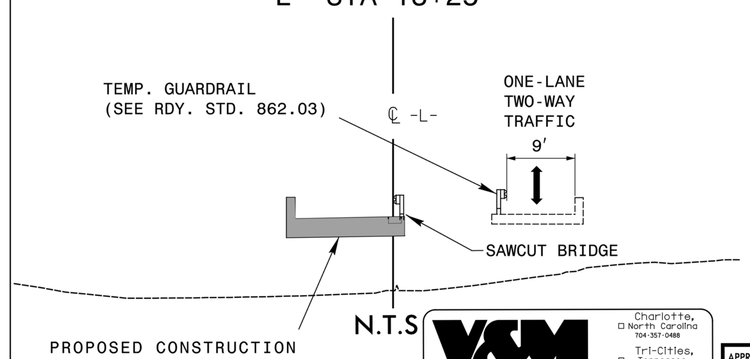

SECTION C-C

-L- STA 13+75

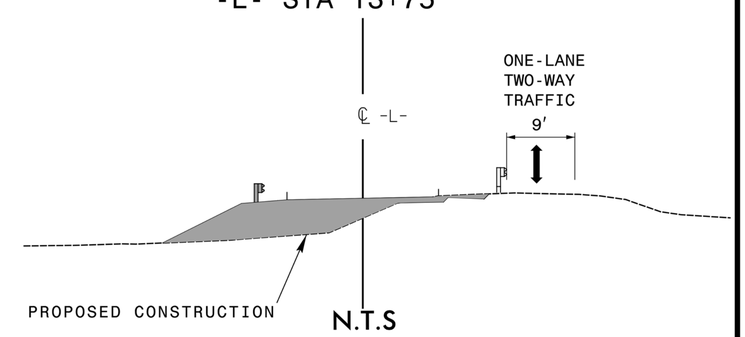

V&M
Vaughn & Melton
Consulting Engineers
Asheville, North Carolina 828-253-2796
Charlotte, North Carolina 704-357-0488
Tri-Cities, Tennessee 423-467-8401
Knoxville, Tennessee 865-546-5800
Middlesboro, Kentucky 606-248-6600
Spartanburg, South Carolina 864-574-4775
Atlanta, Georgia 770 621-3590

Copyright © 2006 Vaughn & Melton, Inc. All Rights Reserved

APPROVED:_____ DATE:_____

SEAL

NORTH CAROLINA PROFESSIONAL SEAL 20119 ENGINEER LLOYD B. BROWN JR.

4/29/2013

DIVISION OF HIGHWAYS STATE OF NORTH CAROLINA DEPARTMENT OF TRANSPORTATION WORK ZONE TRAFFIC CONTROL

PHASE 1

$$$$SYSTIME$$$$
$$$$DGN$$$$
$$$$USERNAME$$$$

PROJ. REFERENCE NO.	SHEET NO.
BD-5114Q	TMP-4

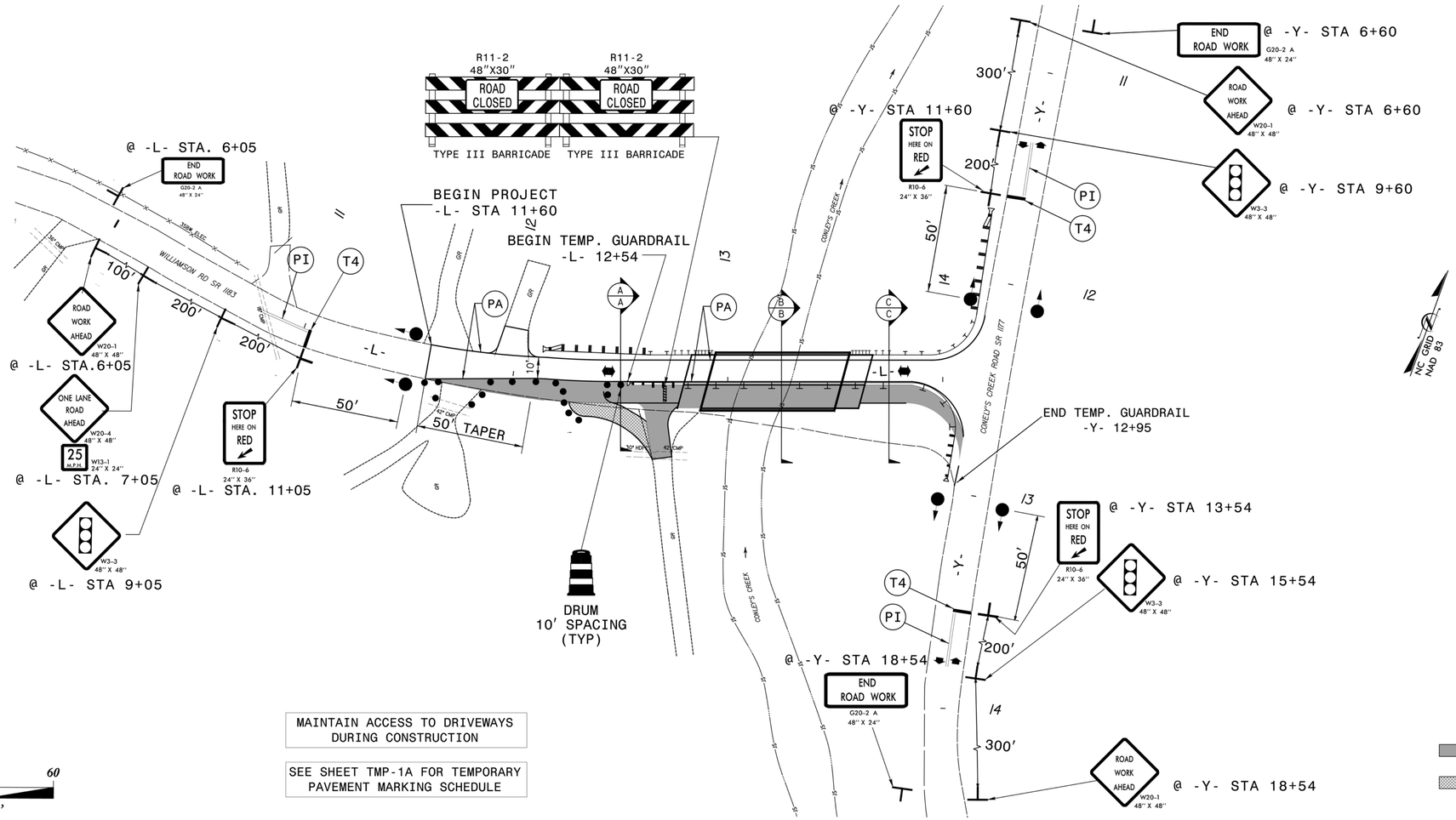

MAINTAIN ACCESS TO DRIVEWAYS DURING CONSTRUCTION

SEE SHEET TMP-1A FOR TEMPORARY PAVEMENT MARKING SCHEDULE

30 0 30 60
SCALE 1"=30'

SECTION A-A

-L- STA 12+50

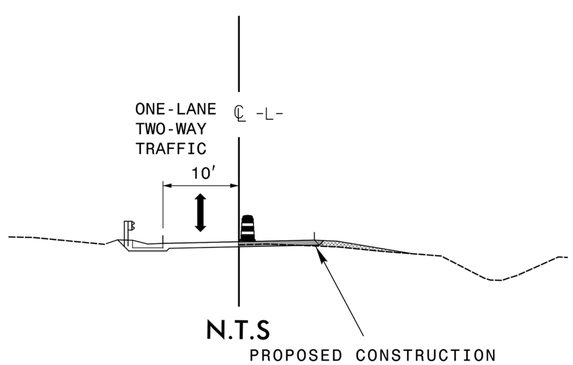

SECTION B-B

-L- STA 13+25

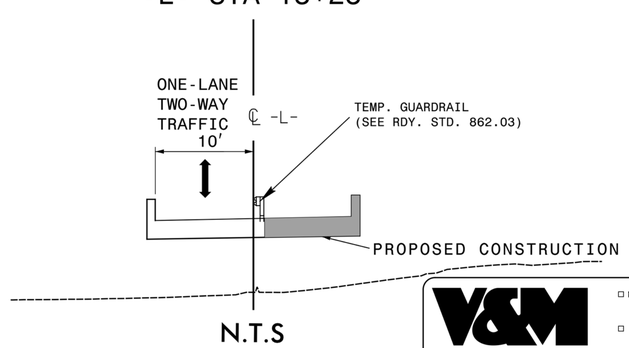

SECTION C-C

-L- STA 13+75

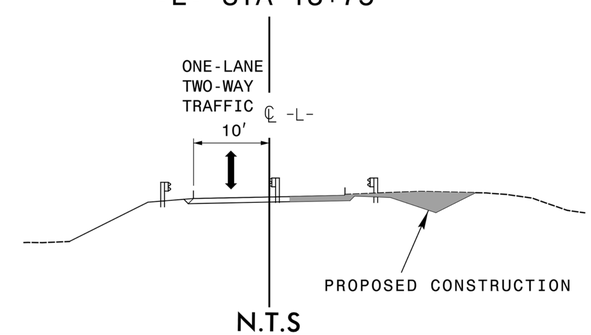

V&M
Vaughn & Melton
Consulting Engineers
Asheville, North Carolina 828-253-2796
Charlotte, North Carolina 704-357-0488
Tri-Cities, Tennessee 423-467-8401
Knoxville, Tennessee 865-546-5800
Middlesboro, Kentucky 606-248-6600
Spartanburg, South Carolina 864-574-4775
Atlanta, Georgia 770 627-3590

Copyright © 2006 Vaughn & Melton, Inc. All Rights Reserved

APPROVED: _____ DATE: _____

SEAL

NORTH CAROLINA PROFESSIONAL SEAL 20119 ENGINEER JOHN W. BROWN
4/29/2013

DIVISION OF HIGHWAYS STATE OF NORTH CAROLINA DEPARTMENT OF TRANSPORTATION WORK ZONE TRAFFIC CONTROL

PHASE 2

$$$$$SYSTIME$$$$
$$$$$$$$$$$$$$$$$$$$$$$$$$$$$$$$
$$$$$USERNAME$$$$

PROJECT REFERENCE NO.	SHEET NO.
BD-5114Q	SIG. 1

PHASING DIAGRAM

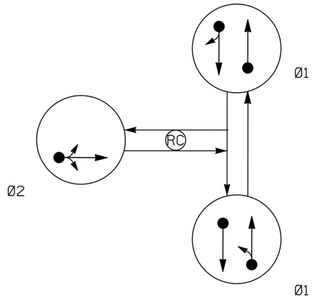

PHASING DIAGRAM DETECTION LEGEND

- DETECTED MOVEMENT
- UNDETECTED MOVEMENT (OVERLAP)
- UNSIGNALIZED MOVEMENT
- PEDESTRIAN MOVEMENT

TABLE OF OPERATION

SIGNAL FACE	Ø2 R/W	Ø2 CLEAR Ø1 1	Ø2 CLEAR Ø1 2	Ø1 R/W	Ø1 CLEAR Ø2 1	Ø1 CLEAR Ø2 2	FLASH
11,12,13,14	R	R	R	G	Y	R	R
21,22	G	Y	R	R	R	R	R

SIGNAL FACE I.D.

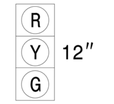

11, 12
13, 14
21, 22

NOTES

1. PORTABLE TEMPORARY INSTALLATION.
2. SIGNAL HEADS SHALL BE NO CLOSER THAN 40 FEET FROM THE STOPLINE.
3. NO COUNTS AVAILABLE.
4. CONTRACTOR TO UTILIZE NCDOT PRE-APPROVED PORTABLE TRAFFIC SIGNAL MANUFACTURER AND MODEL.

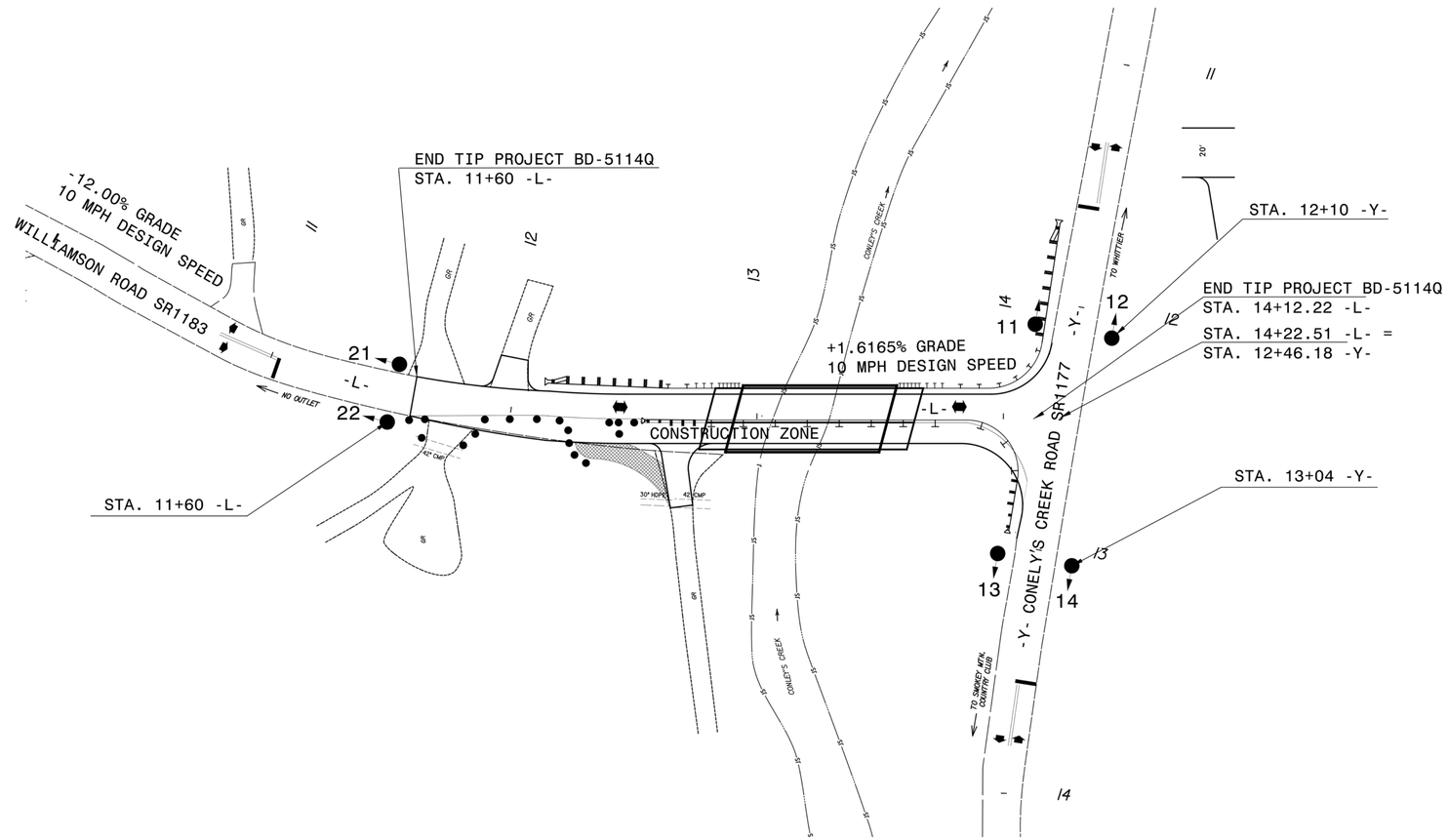

TIMING CHART
NEMA CONTROLLER

PHASE	Ø1	Ø2
MINIMUM GREEN	40 SEC.	40 SEC.
PASSAGE/GAP	0 SEC.	0 SEC.
YELLOW CHANGE INT.	4.0 SEC.	4.0 SEC.
RED CLEARANCE	22 SEC.	22 SEC.
MAX. 1	40 SEC.	40 SEC.
RECALL POSITION	MAX. RECALL	MAX. RECALL
VEHI. CALL MEMORY	–	–

$$$$SYSTIME$$$$
$$$$USERNAME$$$$
$$$$DGN$$$$
$$$$SUCCRNAME$$$$

Prepared in the Offices of:

V&M
Vaughn & Melton
Consulting Engineers
Asheville, North Carolina
828-253-2796
Charlotte, North Carolina 704-561-0400
Tri-Cities, Tennessee 423-467-8118
Knoxville, Tennessee 865-546-9900
Middlesboro, Kentucky 606-248-8800
Spartanburg, South Carolina 864-582-8111
Atlanta, Georgia 770-457-7800

Copyright © 2006 Vaughn & Melton, Inc. All Rights Reserved

SCALE
0 30

PORTABLE TRAFFIC SIGNAL PLAN
SR 1182 WILLIAMSON ROAD

DIV. 14 SWAIN COUNTY

PLAN DATE:	5/15/12	REVIEWED BY:	LDB
PREPARED BY:	ACC	REVIEWED BY:	

REVISIONS	INIT.	DATE

SEAL

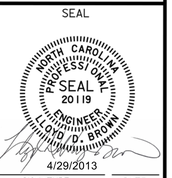

4/29/2013

SIGNATURE DATE

SIG. INVENTORY NO.

PROJ. REFERENCE NO.	SHEET NO.
BD-5114Q	PM-1

END TIP PROJECT BD-5114Q
STA. 11+60 -L-
TIE TO EXISTING PAVEMENT MARKINGS

TIE TO EXISTING
PAVEMENT MARKINGS

END TIP PROJECT BD-5114Q
STA. 14+12.22 -L-

TIE TO EXISTING
PAVEMENT MARKINGS

NOTE: TEMPORARY PAVEMENT MARKINGS = 1 COAT OF PAINT
FINAL PAVEMENT MARKINGS = 2 COATS OF PAINT

20 10 0 20 40
SCALE 1"=20'

V&M
Vaughn & Melton
Consulting Engineers
Asheville, North Carolina 828-253-2796
Charlotte, North Carolina 704-357-0488
Tri-Cities, Tennessee 423-467-8401
Knoxville, Tennessee 865-546-5800
Middlesboro, Kentucky 606-248-6600
Spartanburg, South Carolina 864-574-4775

Copyright © 2006 Vaughn & Melton, Inc.
All Rights Reserved

APPROVED:_____ DATE:_____

SEAL

NORTH CAROLINA PROFESSIONAL SEAL 20119 ENGINEER LLOYD D. BROWN
4/29/2013

DIVISION OF HIGHWAYS
STATE OF NORTH CAROLINA
DEPARTMENT OF TRANSPORTATION
WORK ZONE TRAFFIC CONTROL

PERMANENT PAVEMENT MARKING PLAN

$$$$$SYSTIME$$$$$
$$$$$$$$$$$$DGN$$$$$$$$$$$$
$$$$$USERNAME$$$$

PROJECT REFERENCE NO.	SHEET NO.
BD-5114Q	EC-01/CONST.4
R/W SHEET NO.	
ROADWAY DESIGN ENGINEER	HYDRAULICS ENGINEER

Vaughn & Melton
Consulting Engineers
Asheville, North Carolina 828-253-2796
Charlotte, North Carolina 704-895-905
Tri-Cities, Tennessee 423-467-840
Knoxville, Tennessee 865-546-5800
Middlesboro, Kentucky 606-248-5800
Spartanburg, South Carolina 864-574-4775

Copyright © 1994 Vaughn & Melton, Inc. All Rights Reserved

EROSION CONTROL PLAN

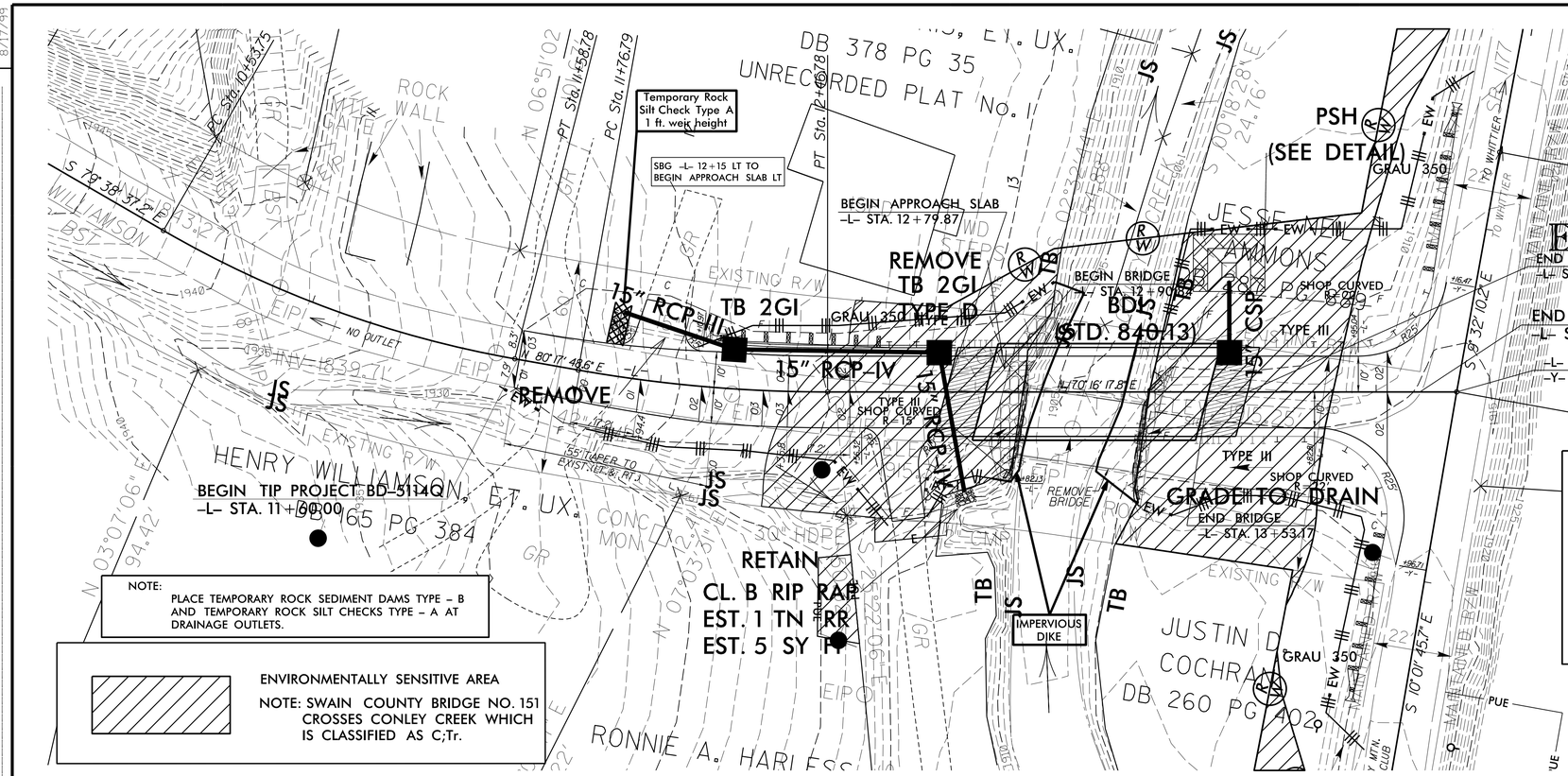

NOTE:
PLACE TEMPORARY ROCK SEDIMENT DAMS TYPE – B AND TEMPORARY ROCK SILT CHECKS TYPE – A AT DRAINAGE OUTLETS.

ENVIRONMENTALLY SENSITIVE AREA

NOTE: SWAIN COUNTY BRIDGE NO. 151 CROSSES CONLEY CREEK WHICH IS CLASSIFIED AS C;Tr.

DUSTIN D. CREECH
LEVEL III NAME

3019
LEVEL III CERTIFICATION NO.

CLEARING AND GRUBBING
EROSION CONTROL FOR CONSTRUCTION SHEET 4

2012 STANDARD DRAWINGS

1604.01	Railroad Erosion Control Detail	1632.01	Rock Inlet Sediment Trap Type A
1605.01	Temporary Silt Fence	1632.02	Rock Inlet Sediment Trap Type B
1606.01	Special Sediment Control Fence	1632.03	Rock Inlet Sediment Trap Type C
1607.01	Gravel Construction Entrance	1633.01	Temporary Rock Silt Check Type A
1622.01	Temporary Berms and Slope Drains	1633.02	Temporary Rock Silt Check Type B
1630.01	Riser Basin	1634.01	Temporary Rock Sediment Dam Type A
1630.02	Silt Basin Type B	1634.02	Temporary Rock Sediment Dam Type B
1630.03	Temporary Silt Ditch	1635.01	Rock Pipe Inlet Sediment Trap Type A
1630.04	Stilling Basin	1635.02	Rock Pipe Inlet Sediment Trap Type B
1630.05	Temporary Diversion	1640.01	Coir Fiber Baffle
1630.06	Special Stilling Basin	1645.01	Temporary Stream Crossing
1631.01	Matting Installation		

NOTE: REMOVE EXISTING ABUTMENTS AND FOOTINGS; PLACE BANK STABILIZATION w/CLASS II RIP RAP TO AREA; USE IMPERVIOUS DIKE STANDARD BMP ALONG STREAM BANKS TO DEWATER AND ISOLATE ADJACENT WORK AREA TO REMOVE EXISTING ABUTMENTS AND PILES IN THE DRY. THE PLACEMENT OF THE IMPERVIOUS DIKE IS CONSIDERED INCIDENTAL TO THE ABUTMENT REMOVAL.

NOTES: ANY DEVIATION FROM OPTIONS GIVEN WILL REQUIRE PRIOR APPROVAL BY ENGINEER.

ADDITIONAL EROSION CONTROL DEVICES MAY NEED TO BE INSTALLED AS DIRECTED BY THE ENGINEER.

THESE EROSION AND SEDIMENT CONTROL PLANS COMPLY WITH THE REGULATIONS SET FORTH BY THE NCG-010000 GENERAL CONSTRUCTION PERMIT EFFECTIVE AUGUST 3, 2011 ISSUED BY THE NORTH CAROLINA DEPARTMENT OF ENVIRONMENT AND NATURAL RESOURCES DIVISION OF WATER QUALITY.

ROADSIDE ENVIRONMENTAL UNIT
DEPARTMENT OF TRANSPORTATION
DIVISION OF HIGHWAYS
RALEIGH, N.C.

2012 STANDARD SPECIFICATIONS

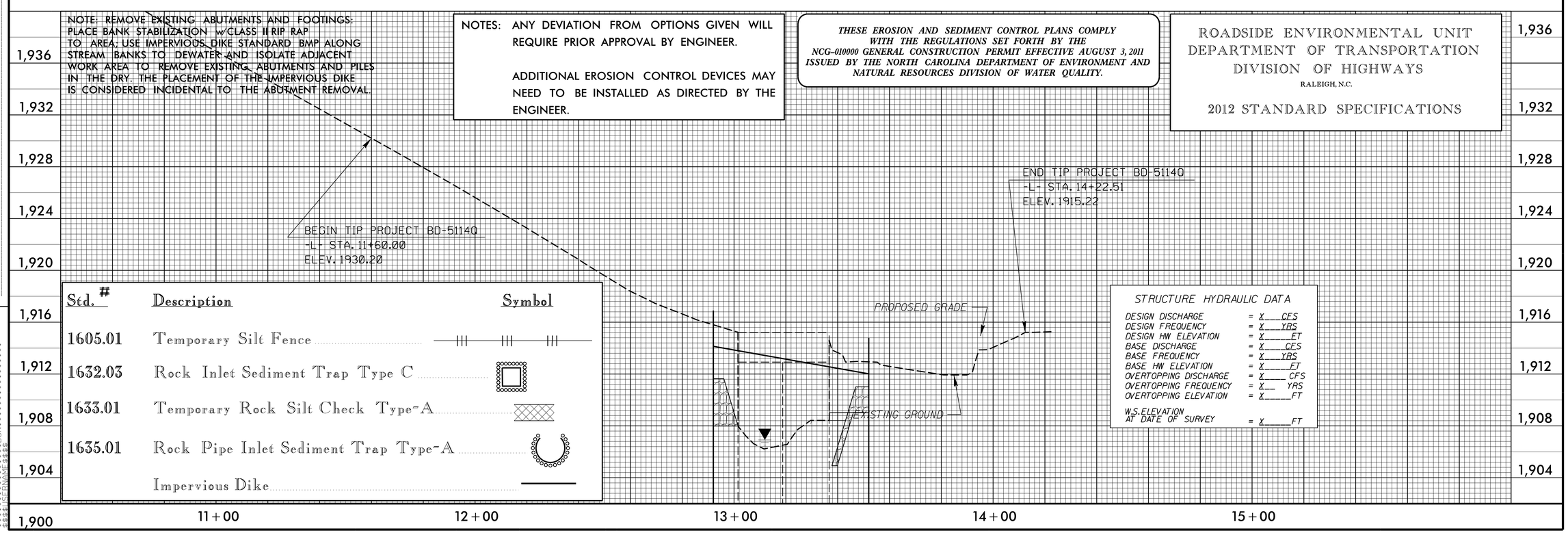

Std. #	Description	Symbol
1605.01	Temporary Silt Fence	
1632.03	Rock Inlet Sediment Trap Type C	
1633.01	Temporary Rock Silt Check Type-A	
1635.01	Rock Pipe Inlet Sediment Trap Type-A	
	Impervious Dike	

STRUCTURE HYDRAULIC DATA

DESIGN DISCHARGE	= X____CFS
DESIGN FREQUENCY	= X____YRS
DESIGN HW ELEVATION	= X____FT
BASE DISCHARGE	= X____CFS
BASE FREQUENCY	= X____YRS
BASE HW ELEVATION	= X____FT
OVERTOPPING DISCHARGE	= X____CFS
OVERTOPPING FREQUENCY	= X____YRS
OVERTOPPING ELEVATION	= X____FT
W.S. ELEVATION AT DATE OF SURVEY	= X____FT

REVISIONS

8/17/99

PROJECT REFERENCE NO.	SHEET NO.
BD-5114Q	EC-02/CONST.04
R/W SHEET NO.	
ROADWAY DESIGN ENGINEER	HYDRAULICS ENGINEER

V&M
Vaughn & Melton
Consulting Engineers
Asheville, North Carolina 828-253-2796
Charlotte, North Carolina 704-895-9051
Tri-Cities, Tennessee 423-467-8401
Knoxville, Tennessee 865-546-5800
Middlesboro, Kentucky 606-248-6600
Spartanburg, South Carolina 864-574-4775

Copyright © 1994 Vaughn & Melton, Inc. All Rights Reserved

EROSION CONTROL PLAN

DUSTIN D. CREECH
LEVEL III NAME

3019
LEVEL III CERTIFICATION NO.

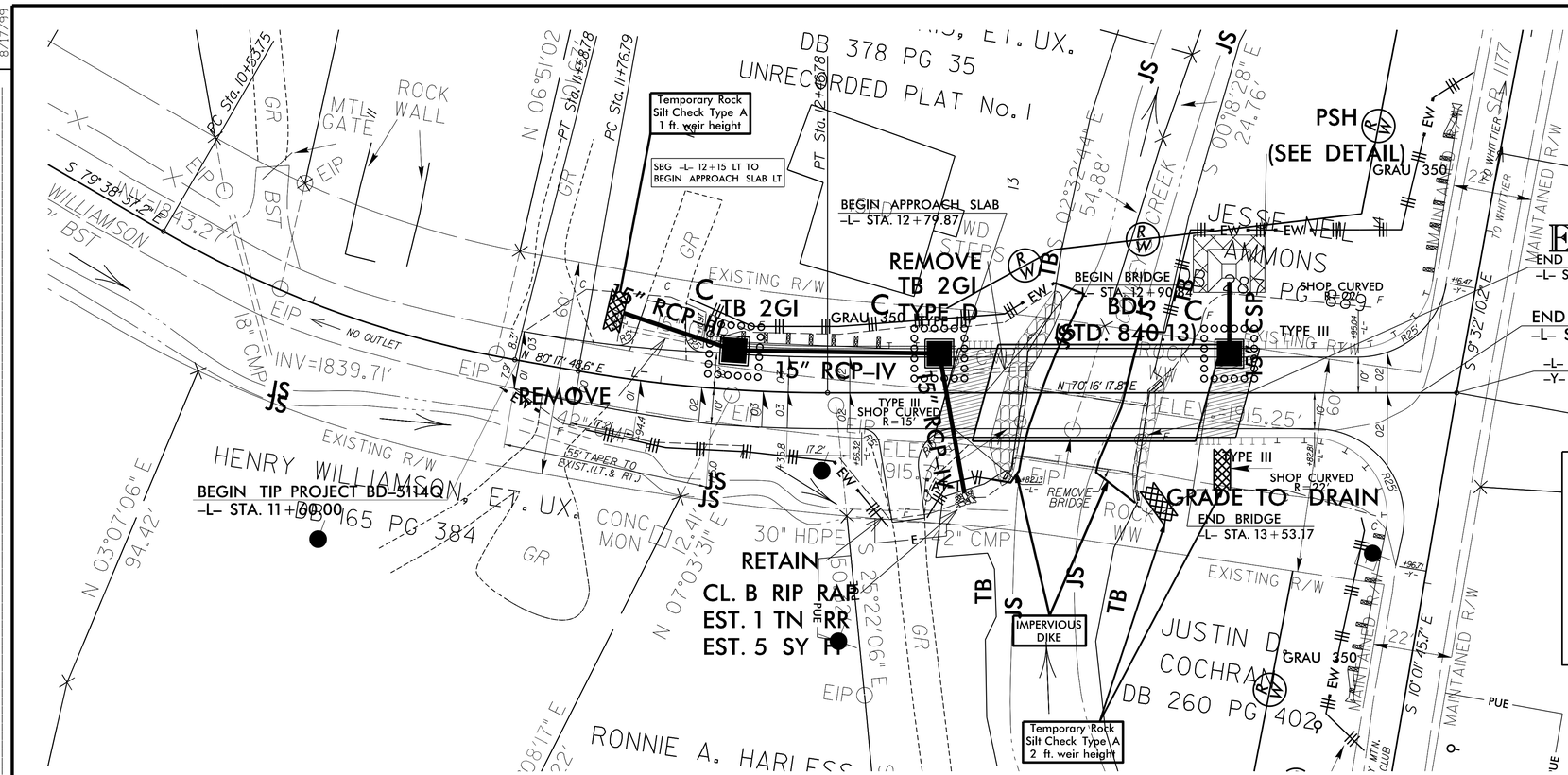

2012 STANDARD DRAWINGS

1604.01	Railroad Erosion Control Detail	1632.01	Rock Inlet Sediment Trap Type A
1605.01	Temporary Silt Fence	1632.02	Rock Inlet Sediment Trap Type B
1606.01	Special Sediment Control Fence	1632.03	Rock Inlet Sediment Trap Type C
1607.01	Gravel Construction Entrance	1633.01	Temporary Rock Silt Check Type A
1622.01	Temporary Berms and Slope Drains	1633.02	Temporary Rock Silt Check Type B
1630.01	Riser Basin	1634.01	Temporary Rock Sediment Dam Type A
1630.02	Silt Basin Type B	1634.02	Temporary Rock Sediment Dam Type B
1630.03	Temporary Silt Ditch	1635.01	Rock Pipe Inlet Sediment Trap Type A
1630.04	Stilling Basin	1635.02	Rock Pipe Inlet Sediment Trap Type B
1630.05	Temporary Diversion	1640.01	Coir Fiber Baffle
1630.06	Special Stilling Basin	1645.01	Temporary Stream Crossing
1631.01	Matting Installation		

NOTE: REMOVE EXISTING ABUTMENTS AND FOOTINGS; PLACE BANK STABILIZATION w/CLASS II RIP RAP TO AREA; USE IMPERVIOUS DIKE STANDARD BMP ALONG STREAM BANKS TO DEWATER AND ISOLATE ADJACENT WORK AREA TO REMOVE EXISTING ABUTMENTS AND PILES IN THE DRY. THE PLACEMENT OF THE IMPERVIOUS DIKE IS CONSIDERED INCIDENTAL TO THE ABUTMENT REMOVAL.

NOTES: ANY DEVIATION FROM OPTIONS GIVEN WILL REQUIRE PRIOR APPROVAL BY ENGINEER.

ADDITIONAL EROSION CONTROL DEVICES MAY NEED TO BE INSTALLED AS DIRECTED BY THE ENGINEER.

THESE EROSION AND SEDIMENT CONTROL PLANS COMPLY WITH THE REGULATIONS SET FORTH BY THE NCG-010000 GENERAL CONSTRUCTION PERMIT EFFECTIVE AUGUST 3, 2011 ISSUED BY THE NORTH CAROLINA DEPARTMENT OF ENVIRONMENT AND NATURAL RESOURCES DIVISION OF WATER QUALITY.

ROADSIDE ENVIRONMENTAL UNIT
DEPARTMENT OF TRANSPORTATION
DIVISION OF HIGHWAYS
RALEIGH, N.C.

2012 STANDARD SPECIFICATIONS

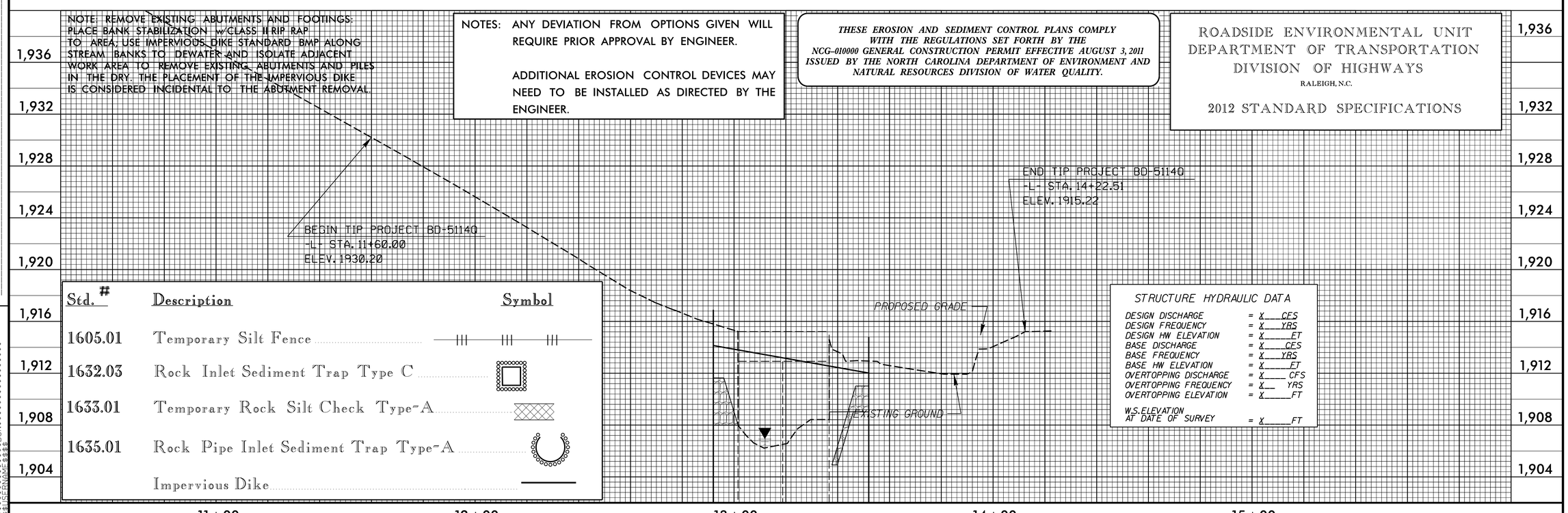

Std. #	Description	Symbol
1605.01	Temporary Silt Fence	
1632.03	Rock Inlet Sediment Trap Type C	
1633.01	Temporary Rock Silt Check Type-A	
1635.01	Rock Pipe Inlet Sediment Trap Type-A	
	Impervious Dike	

STRUCTURE HYDRAULIC DATA

DESIGN DISCHARGE	= X____CFS
DESIGN FREQUENCY	= X____YRS
DESIGN HW ELEVATION	= X____FT
BASE DISCHARGE	= X____CFS
BASE FREQUENCY	= X____YRS
BASE HW ELEVATION	= X____FT
OVERTOPPING DISCHARGE	= X____CFS
OVERTOPPING FREQUENCY	= X____YRS
OVERTOPPING ELEVATION	= X____FT
W.S. ELEVATION AT DATE OF SURVEY	= X____FT

REVISIONS

8/17/99

1_SYSTME$$$$
2_GDLN$$$$
3_GRAPE$$$$

PROJECT REFERENCE NO.	SHEET NO.
BD-5114Q	EC-3A
ROADWAY DESIGN ENGINEER	HYDRAULICS ENGINEER

DIVISION OF HIGHWAYS
STATE OF NORTH CAROLINA

SOIL STABILIZATION SUMMARY SHEET

MATTING FOR EROSION CONTROL

CONST SHEET NO.	LINE	FROM STATION	TO STATION	SIDE	ESTIMATE (SY)
4	-L-	11+60	12+00	LT	9.4
4	-L-	13+50	14+00	LT	59.5
4	-L-	13+50	14+00	RT	23.2
				SUBTOTAL	92.1
MISCELLANEOUS MATTING TO BE INSTALLED AS DIRECTED BY THE ENGINEER					1407
				TOTAL	1499.1
				SAY	1500

MATTING FOR EROSION CONTROL

CONST SHEET NO.	LINE	FROM STATION	TO STATION	SIDE	ESTIMATE (SY)

PROJECT REFERENCE NO.	SHEET NO.
BD-5114Q	EC-3B
ROADWAY DESIGN ENGINEER	HYDRAULICS ENGINEER

DIVISION OF HIGHWAYS
STATE OF NORTH CAROLINA

SOIL STABILIZATION TIMEFRAMES

SITE DESCRIPTION	STABILIZATION TIME	TIMEFRAME EXCEPTIONS
PERIMETER DIKES, SWALES, DITCHES AND SLOPES	7 DAYS	NONE
HIGH QUALITY WATER (HQW) ZONES	7 DAYS	NONE
SLOPES STEEPER THAN 3:1	7 DAYS	IF SLOPES ARE 10' OR LESS IN LENGTH AND ARE NOT STEEPER THAN 2:1, 14 DAYS ARE ALLOWED.
SLOPES 3:1 OR FLATTER	14 DAYS	7 DAYS FOR SLOPES GREATER THAN 50' IN LENGTH.
ALL OTHER AREAS WITH SLOPES FLATTER THAN 4:1	14 DAYS	NONE, EXCEPT FOR PERIMETERS AND HQW ZONES.

PROJECT REFERENCE NO.	SHEET NO.
BD-5140	EC-3C
R/W SHEET NO.	___
ROADWAY DESIGN ENGINEER	HYDRAULICS ENGINEER

SILT FENCE WATTLE BREAK DETAIL

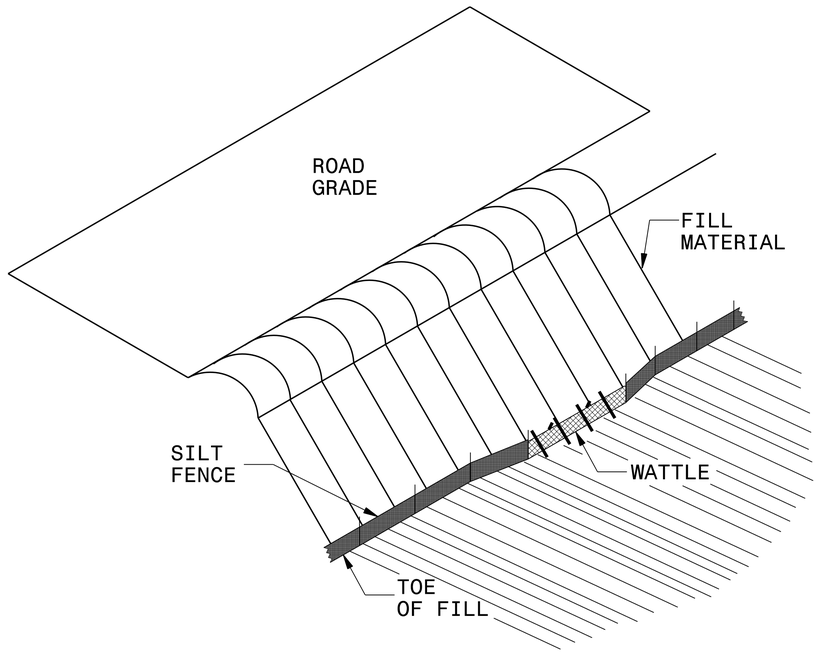

ISOMETRIC VIEW

NOTES:

USE MINIMUM 12 IN. DIAMETER EXCELSIOR WATTLE AND LENGTH OF 10 FT.

EXCAVATE A 1 TO 2 INCH TRENCH FOR WATTLE TO BE PLACED.

DO NOT PLACE WATTLE ON TOE OF SLOPE.

USE 2 FT. WOODEN STAKES WITH A 2 IN. BY 2 IN. NOMINAL CROSS SECTION.

INSTALL A MINIMUM OF 2 UPSLOPE STAKES AND 4 DOWNSLOPE STAKES AT AN ANGLE TO WEDGE WATTLE TO GROUND.

PROVIDE STAPLES MADE OF 0.125 IN. DIAMETER STEEL WIRE FORMED INTO A U SHAPE NOT LESS THAN 12″ IN LENGTH.

INSTALL STAPLES APPROXIMATELY EVERY 1 LINEAR FOOT ON BOTH SIDES OF WATTLE AND AT EACH END TO SECURE IT TO THE SOIL.

WATTLE INSTALLATION CAN BE ON OUTSIDE OF THE SILT FENCE AS DIRECTED.

INSTALL TEMPORARY SILT FENCE IN ACCORDANCE WITH SECTION 1605 OF THE STANDARD SPECIFICATIONS.

INSET A

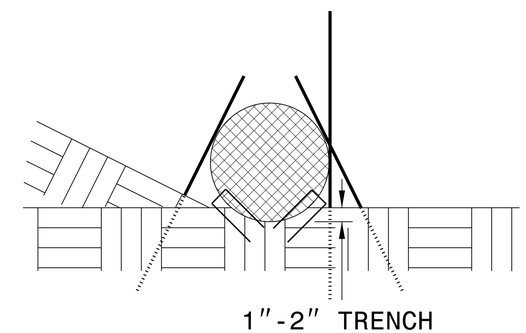

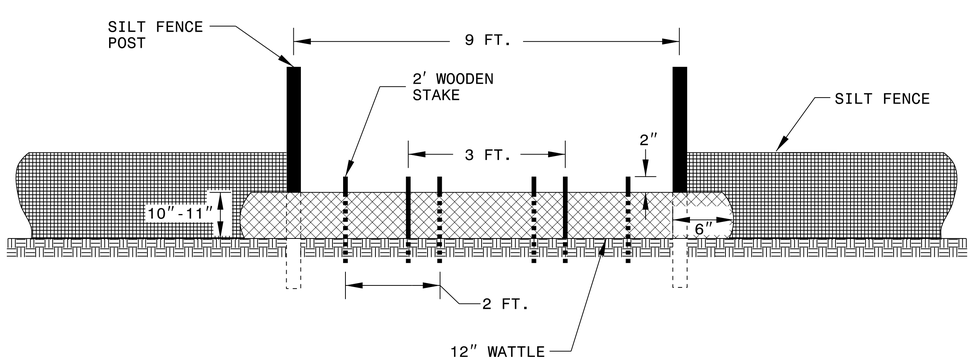

VIEW FROM SLOPE

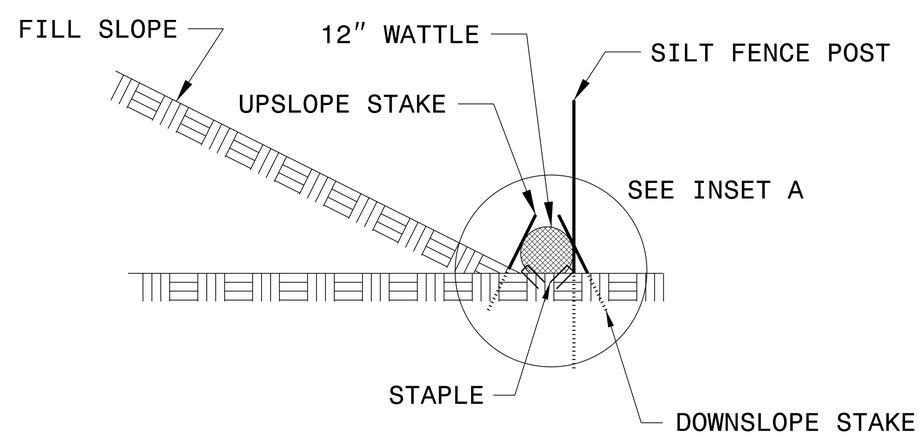

SIDE VIEW

TIP PROJECT: BD-5114Q

See Sheet 1A For Index of Sheets
See Sheet 1B For Standard Symbology Sheet

T.I.P. NO.	SHEET NO.
BD-5114Q	UO-1

STATE OF NORTH CAROLINA
DIVISION OF HIGHWAYS

UTILITIES BY OTHERS PLANS
SWAIN COUNTY

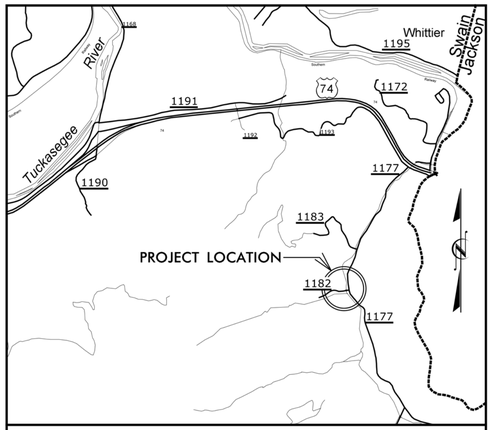

VICINITY MAP N.T.S.

LOCATION: BRIDGE #151 OVER CONLEYS CREEK ON SR 1182 (WILLIAMSON ROAD)

TYPE OF WORK: AERIAL POWER, TELEPHONE AND CABLE TELEVISION

BEGIN TIP PROJECT BD-5114Q
-L- STA. 11+60.00

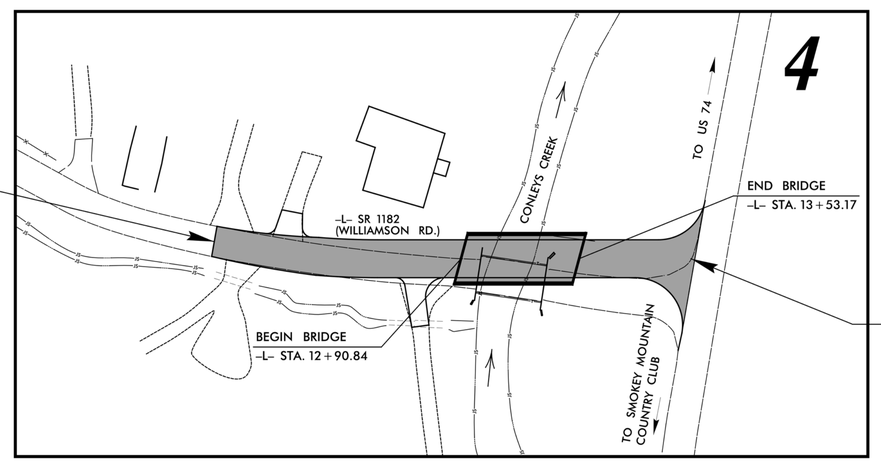

END TIP PROJECT BD-5114Q
-L- STA. 14+12.22

GRAPHIC SCALES

20 10 0 20 40
PLANS

INDEX OF SHEETS

SHEET NO.	DESCRIPTION
UO-1	TITLE SHEET
UO-2	UTILITY BY OTHERS PLAN SHEETS

UTILITY OWNERS ON PROJECT

(1) TELEPHONE - FRONTIER COMMUNICATIONS
(2) POWER - DUKE ENERGY
(3) CABLE TELEVISION - CHEROKEE CABLE VISION

SEAL NORTH CAROLINA PROFESSIONAL SEAL 26960 ENGINEER REECE M. SCHULER
4/29/2013

V&M
Vaughn & Melton
Consulting Engineers
3089-L Beam Road
Charlotte, NC 28217
704-357-0488

PREPARED IN THE OFFICE OF:
DIVISION OF HIGHWAYS
UTILITIES ENGINEERING SECTION
1591 MAIL SERVICES CENTER
RALEIGH NC 27699-1591
PHONE (919) 250-4128
FAX (919) 250-4119

Roger Worthington, P.E.	UTILITIES SECTION ENGINEER
Xxxxx Xxxxx, P.E.	UTILITIES SQUAD LEADER PROJECT ENGINEER
Reece Schuler, PE	UTILITIES PROJECT DESIGNER

09/08/09
$$$$SYSTIME$$$$
$$$$USERNAME$$$$
$$$$DGN$$$$

PROJECT REFERENCE NO.	SHEET NO.
BD-5114Q	U0-2

UTILITIES BY OTHERS

NOTE:
ALL PROPOSED UTILITY WORK SHOWN ON THIS SHEET WILL BE DONE BY OTHERS

V&M
Vaughn & Melton
Consulting Engineers
Charlotte, North Carolina 704-837-7815
Asheville, North Carolina 828-253-2796
Tri-Cities, Tennessee 423-467-8401
Knoxville, Tennessee 865-546-5800
Middlesboro, Kentucky 606-248-6600
Spartanburg, South Carolina 864-574-4775

Copyright © 2006 Vaughn & Melton, Inc.
All Rights Reserved

DATUM DESCRIPTION

THE LOCALIZED COORDINATE SYSTEM DEVELOPED FOR THIS PROJECT IS BASED ON THE STATE PLANE COORDINATES ESTABLISHED BY NCGS FOR MONUMENT "G102"
WITH NAD 83/NSRS 2007 STATE PLANE GRID COORDINATES OF
NORTHING: 636464.459(ft) EASTING: 698311.998(ft)
ELEVATION: 1923.74(ft)
THE AVERAGE COMBINED GRID FACTOR USED ON THIS PROJECT (GROUND TO GRID) IS: 0.999789594
THE N.C. LAMBERT GRID BEARING AND LOCALIZED HORIZONTAL GROUND DISTANCE FROM "G102" TO -L- 1 STATION 10+00 IS
N 80°15'12" W 232.23'
ALL LINEAR DIMENSIONS ARE LOCALIZED HORIZONTAL DISTANCES
VERTICAL DATUM USED IS NAVD 88

BL-1	N 636504.7941	E 697932.4390	ELEV 1965.02
BL-2	N 636503.0778	E 698217.5607	ELEV 1932.02
BL-3	N 636530.6701	E 698473.6436	ELEV 1915.44

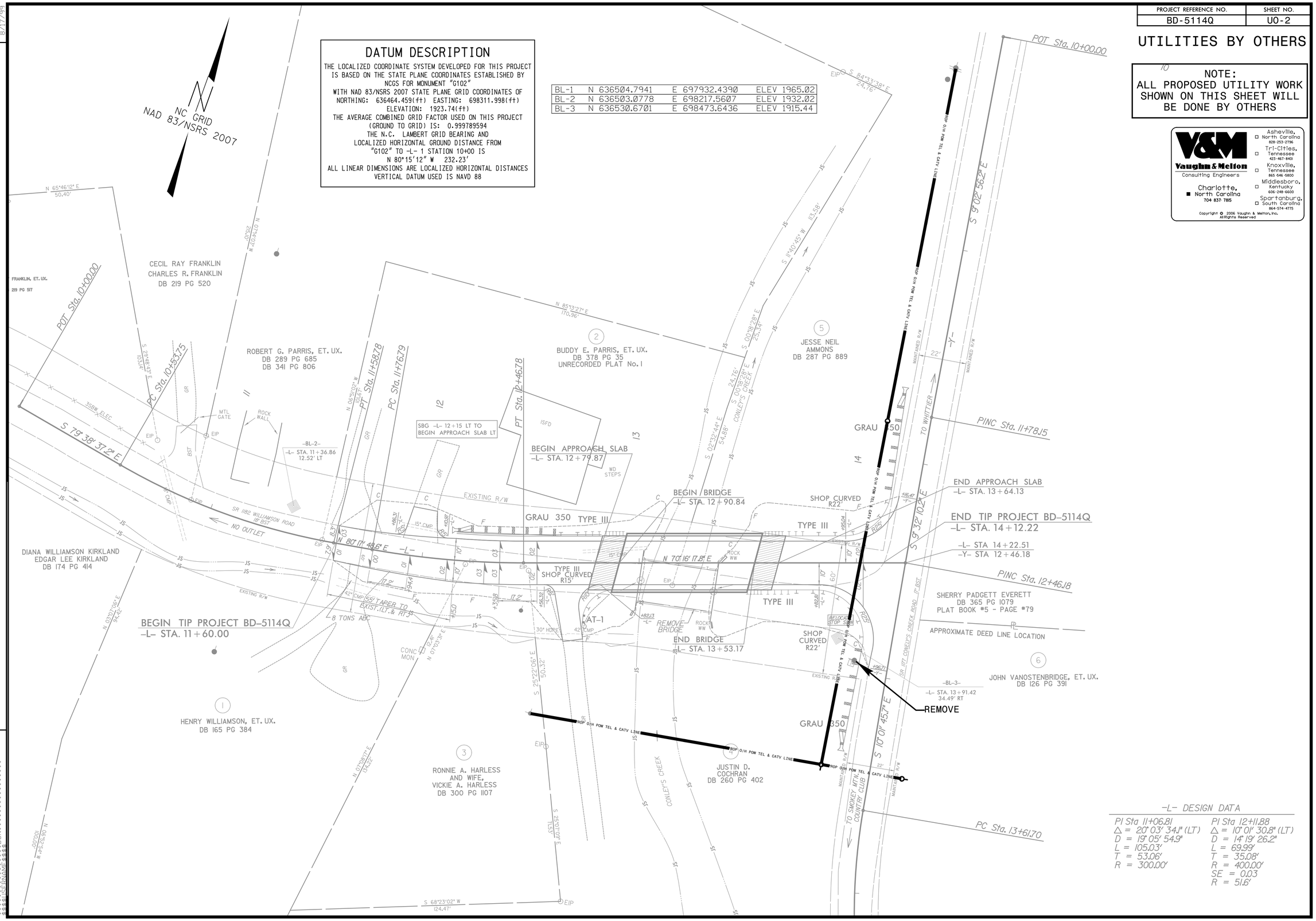

-L- DESIGN DATA

PI Sta 11+06.81	PI Sta 12+11.88
Δ = 20° 03' 34.1" (LT)	Δ = 10° 01' 30.8" (LT)
D = 19° 05' 54.9"	D = 14° 19' 26.2"
L = 105.03'	L = 69.99'
T = 53.06'	T = 35.08'
R = 300.00'	R = 400.00'
	SE = 0.03
	R = 51.6'

REVISIONS

8/17/99

COMPUTED BY: CBC DATE: 02-10-12
CHECKED BY: RMS DATE: 02-10-12

PROJECT REFERENCE NO.	SHEET NO.
BD-5114Q	X-0

DIVISION OF HIGHWAYS
STATE OF NORTH CAROLINA

NORTH CAROLINA PROFESSIONAL SEAL 26960 ENGINEER REECE M. SCHEALER
4/29/2013

CROSS SECTION SUMMARY

IN CUBIC YARDS

-L- LOCATION	UNCLASSIFIED EXCAVATION	EMBT
11+60	0	0
11+75	8	0
12+00	23	0
12+25	20	1
12+50	13	3
12+75	5	16
12+90.84 BEGIN BRIDGE	1	16
13+53.17 END BRIDGE	4	21
13+75	10	48
14+00	15	59
14+12.22	3	8

NOTE: EMBANKMENT COLUMN DOES NOT INCLUDE BACKFILL FOR UNDERCUT.

Approximate quantities only. Unclassified excavation, borrow excavation, fine grading, clearing and grubbing, and removal of existing pavement will be paid for at the contract lump sum price for "grading".

0 2.5 5	PROJ. REFERENCE NO.	SHEET NO.
	BD-5114Q	X-1

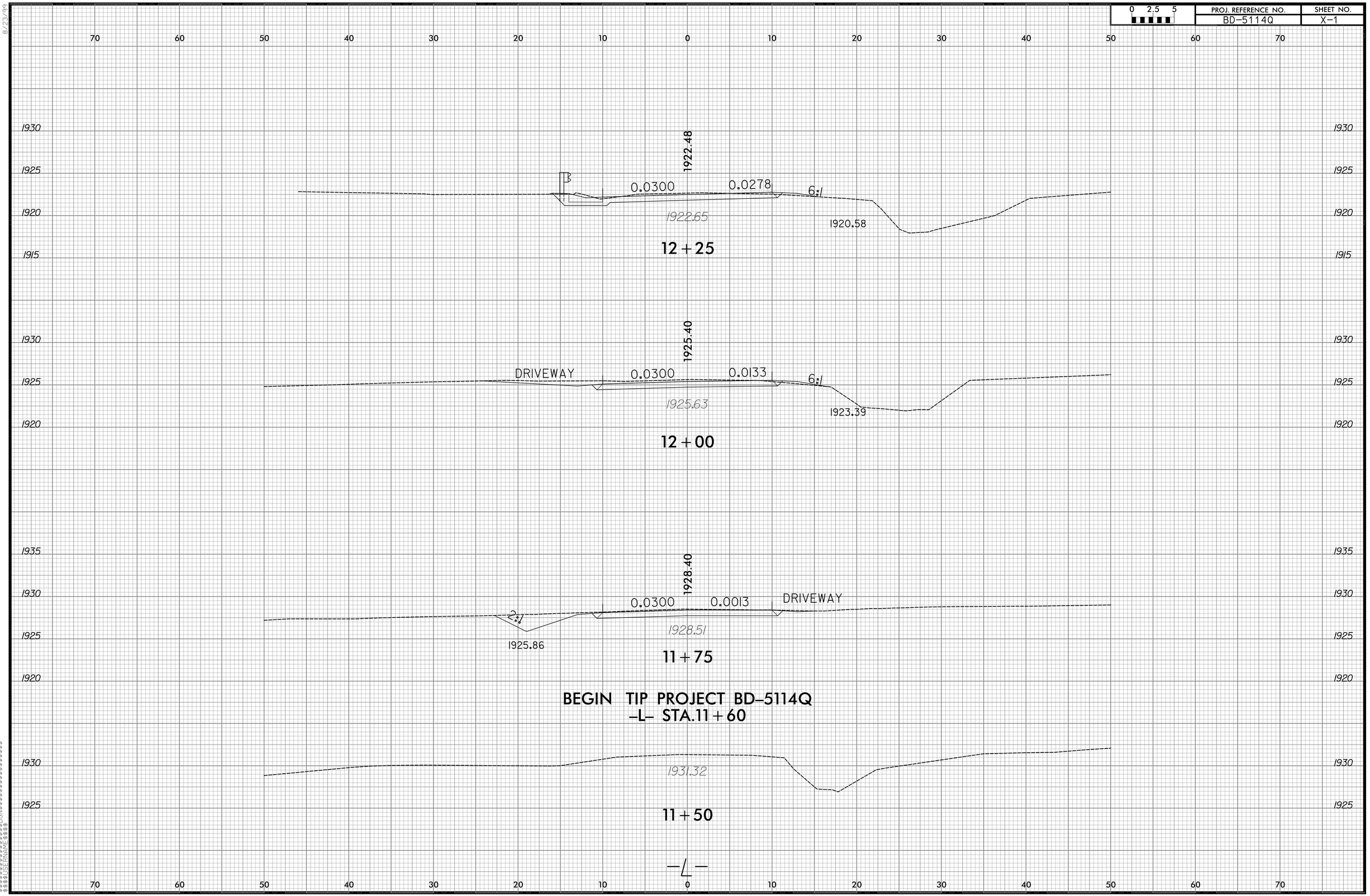

8/23/99

$$$$$$$$CYCTNE$$$$
$$$$$$$$DGN$$$$$$$$
$$$$$$$$SERNAME$$$$

8/23/99

0 2.5 5	PROJ. REFERENCE NO.	SHEET NO.
	BD-5114Q	X-2

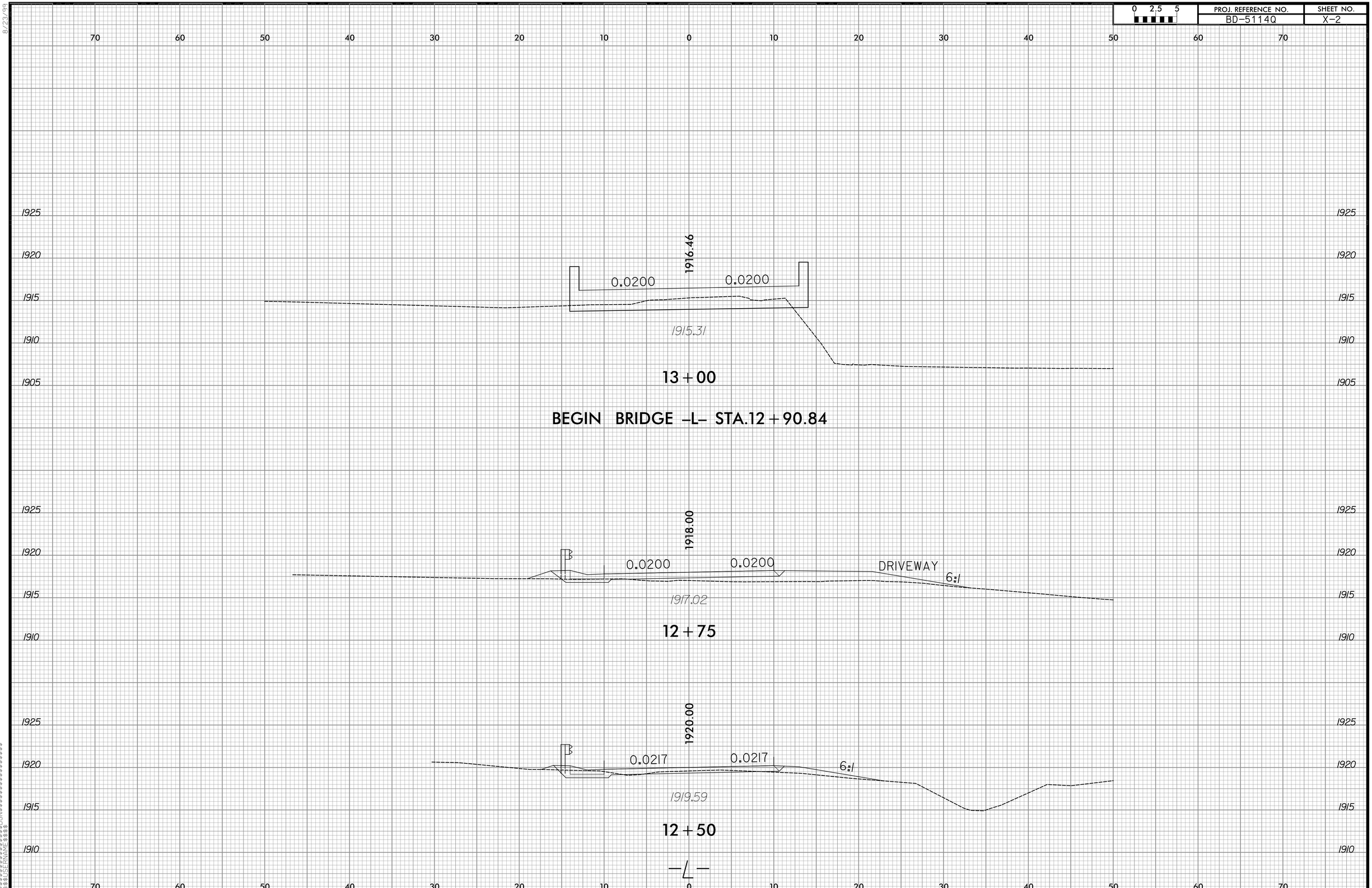

$$$$SYSTIME$$$$
$$$$SYSTIME$$$$
$$$$DGN$$$$
$$$$DGN$$$$
$$$$DGNFRAME$$$$

0 2.5 5	PROJ. REFERENCE NO.	SHEET NO.
	BD-5114Q	X-3

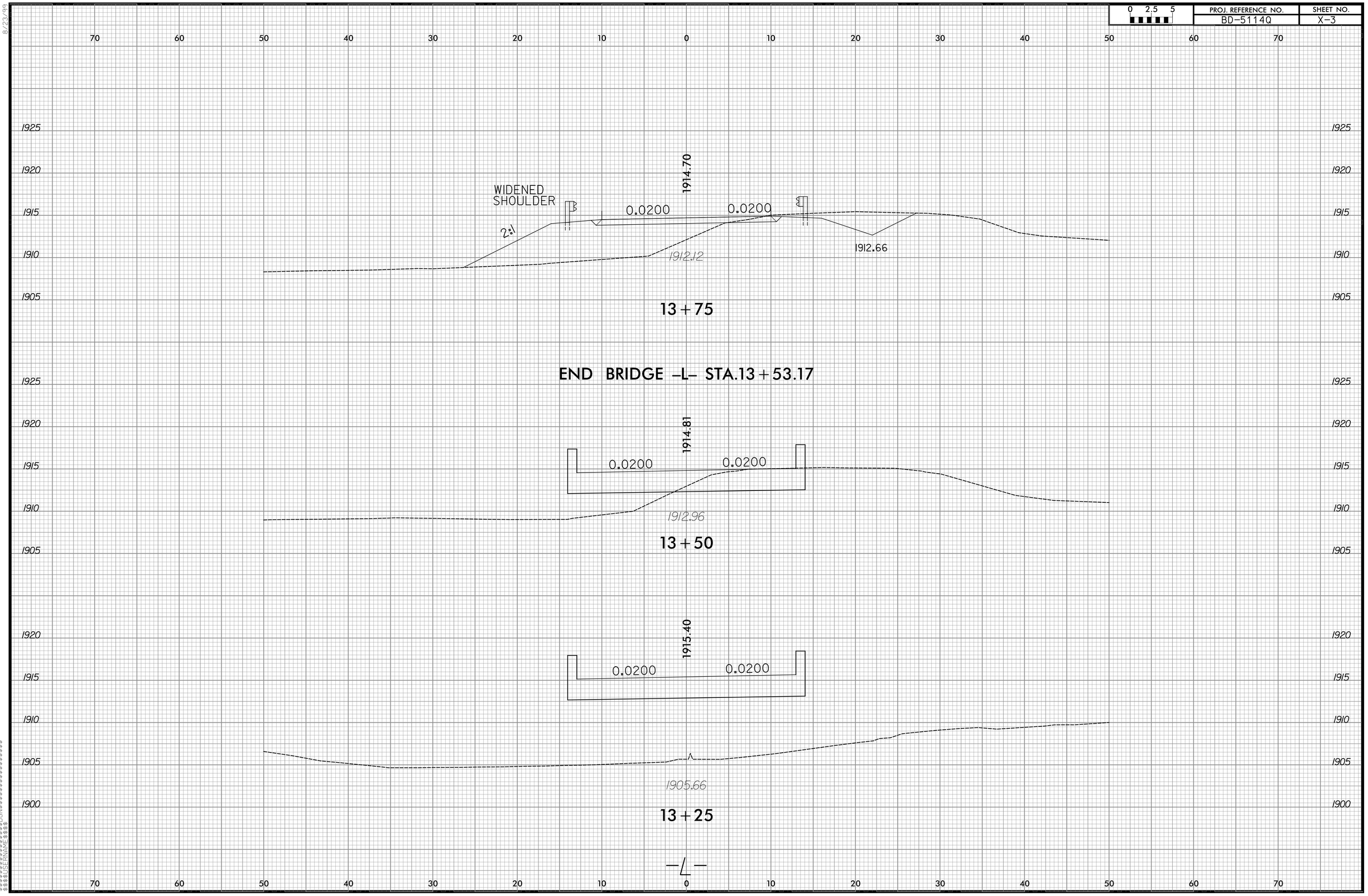

8/23/99

$$$$SYSTIME$$$$
$$$$SYSNAME$$$$
$$$$DGNS$$$$
$$$$USERNAME$$$$

8/23/99

0 2.5 5	PROJ. REFERENCE NO.	SHEET NO.
	BD-5114Q	X-4

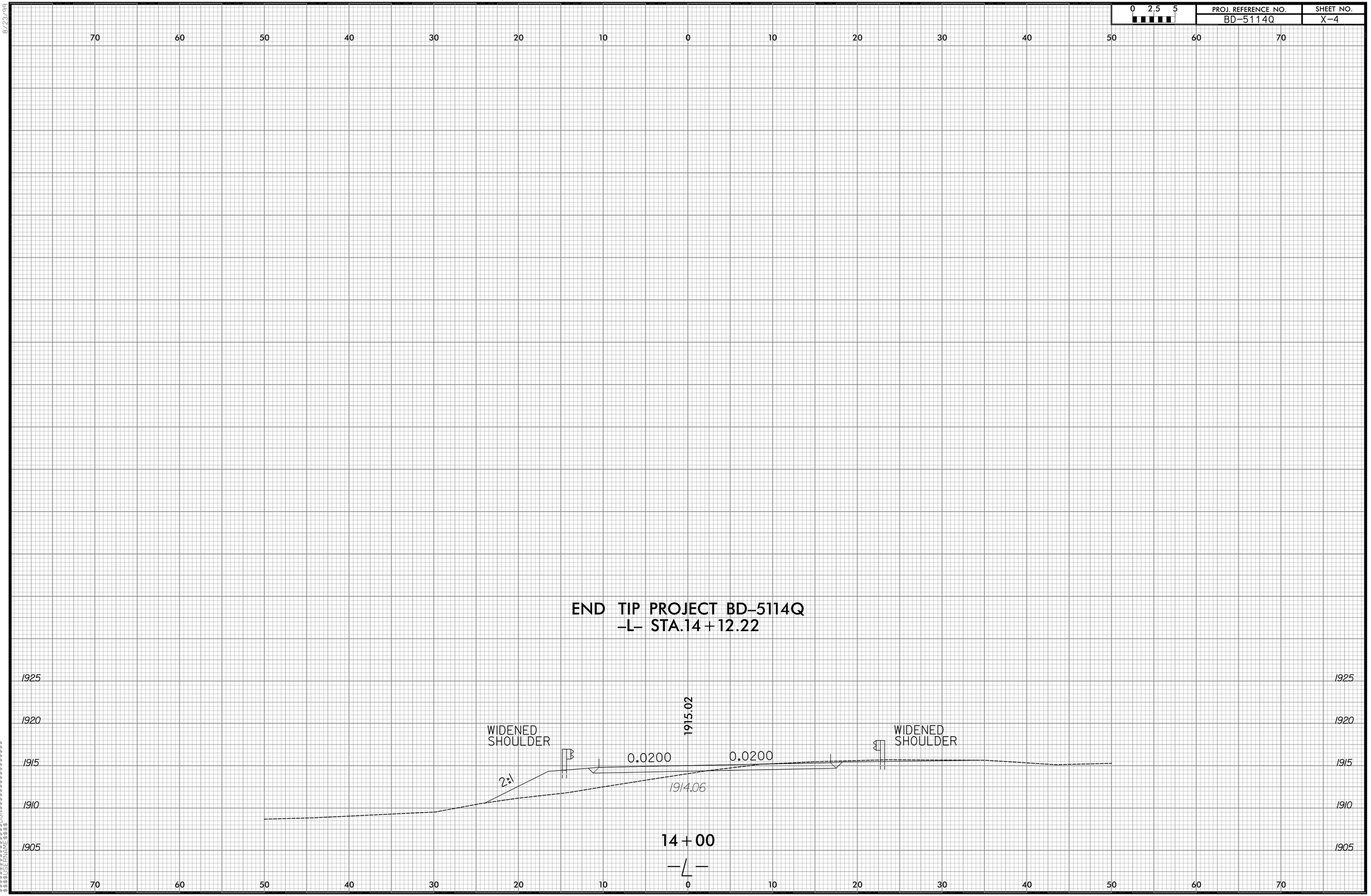

$$$$SYSTIME$$$$
$$$$SFILE$$$$DGN$$$$$$$$$$$$$$$$
$$$$DFRAME$$$$

TIP NO: BD-5114Q

CONTRACT: DN00084

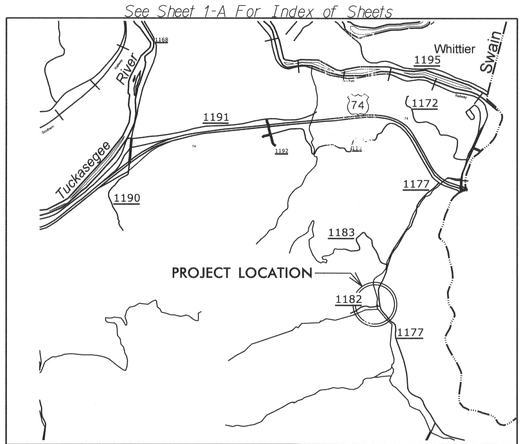

VICINITY MAP

STATE OF NORTH CAROLINA
DIVISION OF HIGHWAYS
SWAIN COUNTY

STATE	STATE PROJECT REFERENCE NO.	SHEET NO.	TOTAL SHEETS
N.C.	BD-5114Q		

STATE PROJ. NO.	F. A. PROJ. NO.	DESCRIPTION
45360.1.17	BRZ-1182(3)	P.E.
45360.2.17	BRZ-1182(3)	R/W
45360.3.17	BRZ-1182(3)	CONST.

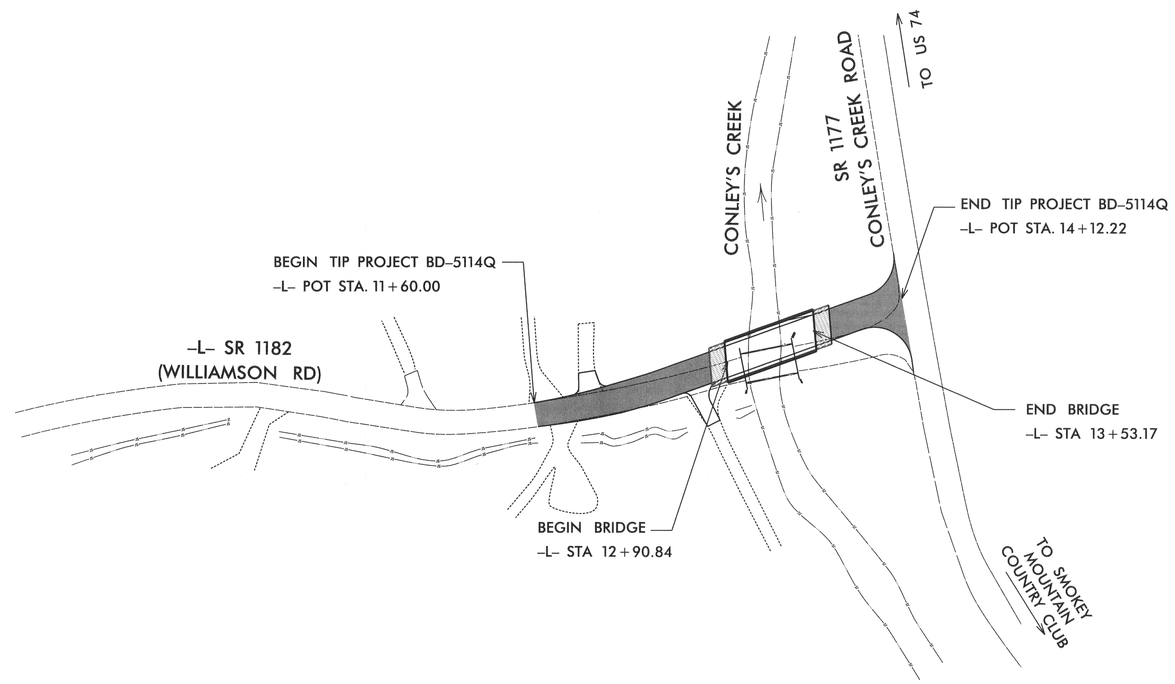

NORTH CAROLINA PROFESSIONAL SEAL 19077 ENGINEER HARDY L. WILLIS 3/14/13

STRUCTURE

V&M
Vaughn & Melton
Consulting Engineers
Asheville, North Carolina 828-253-2796
Charlotte, North Carolina 704-357-0488
Tri-Cities, Tennessee 423-467-8401
Knoxville, Tennessee 865-546-5800
Middlesboro, Kentucky 606-248-6600
Spartanburg, South Carolina 864-574-4775

Copyright © 2006 Vaughn & Melton, Inc. All Rights Reserved

STATE OF NORTH CAROLINA DEPARTMENT OF TRANSPORTATION

DESIGN DATA

ADT 2011 = 105
ADT 2031 = 150
DHV = 14%
D = 60%
T = N/A
V = 40 MPH
FUNCT. CLASS = RURAL LOCAL

PROJECT LENGTH

LENGTH ROADWAY TIP PROJECT BD-5114Q = 0.036 MI
LENGTH STRUCTURE TIP PROJECT BD-5114Q = 0.012 MI
TOTAL LENGTH OF TIP PROJECT BD-5114Q = 0.048 MI

Prepared In the Office of:
VAUGHN & MELTON
1318-F PATTON AVE.
ASHEVILLE NC, 28806
FOR THE NORTH CAROLINA DIVISION OF HIGHWAYS

2012 STANDARD SPECIFICATIONS

LETTING DATE:
APRIL 23, 2013

HARDY WILLIS, PE
PROJECT ENGINEER

NCDOT CONTACT:
JOSH DEYTON, PE
DIVISION BRIDGE PROJECT MANAGER

STRUCTURES MANAGEMENT UNIT
1000 BIRCH RIDGE DR.
RALEIGH, N.C. 27610

DIVISION OF HIGHWAYS
STATE OF NORTH CAROLINA

JOSH DEYTON P.E.
STATE DESIGN ENGINEER

DEPARTMENT OF TRANSPORTATION
FEDERAL HIGHWAY ADMINISTRATION

APPROVED
DIVISION ADMINISTRATOR DATE

FEDERAL AID NO. BRZ-1182(3)

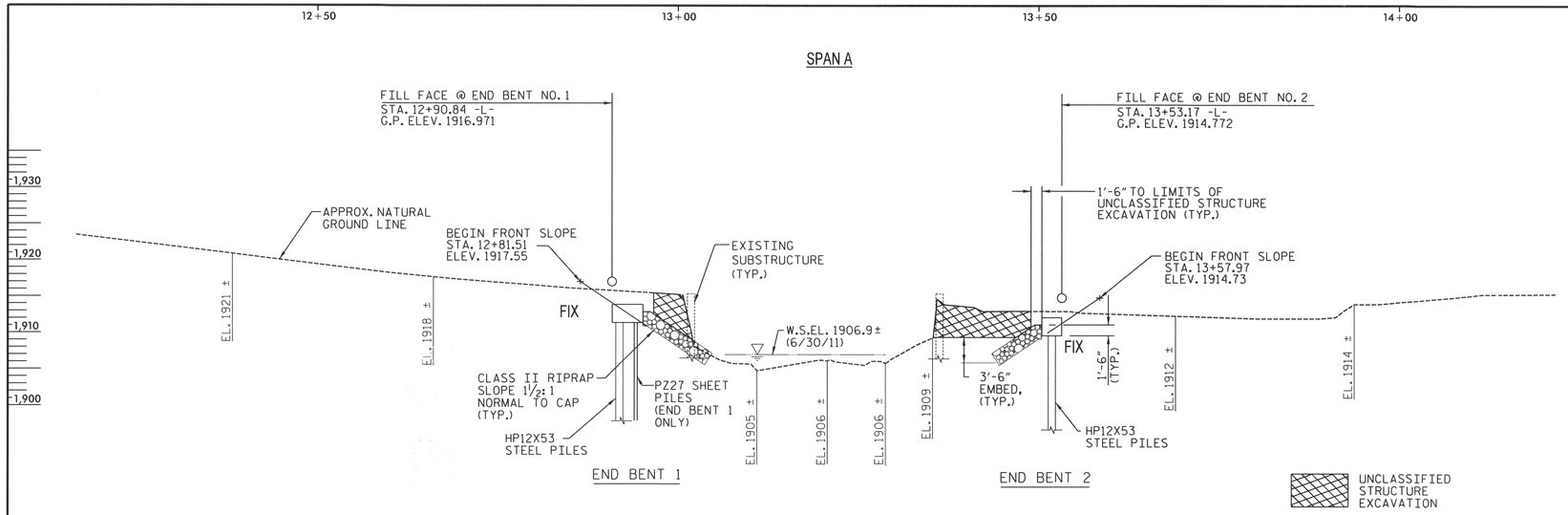

SECTION ALONG ℄ SURVEY -L-

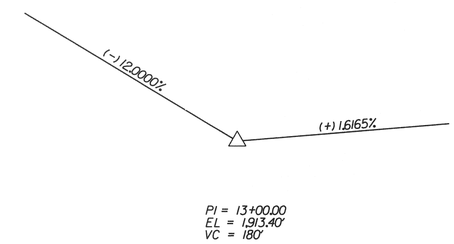

GRADE DATA -L-

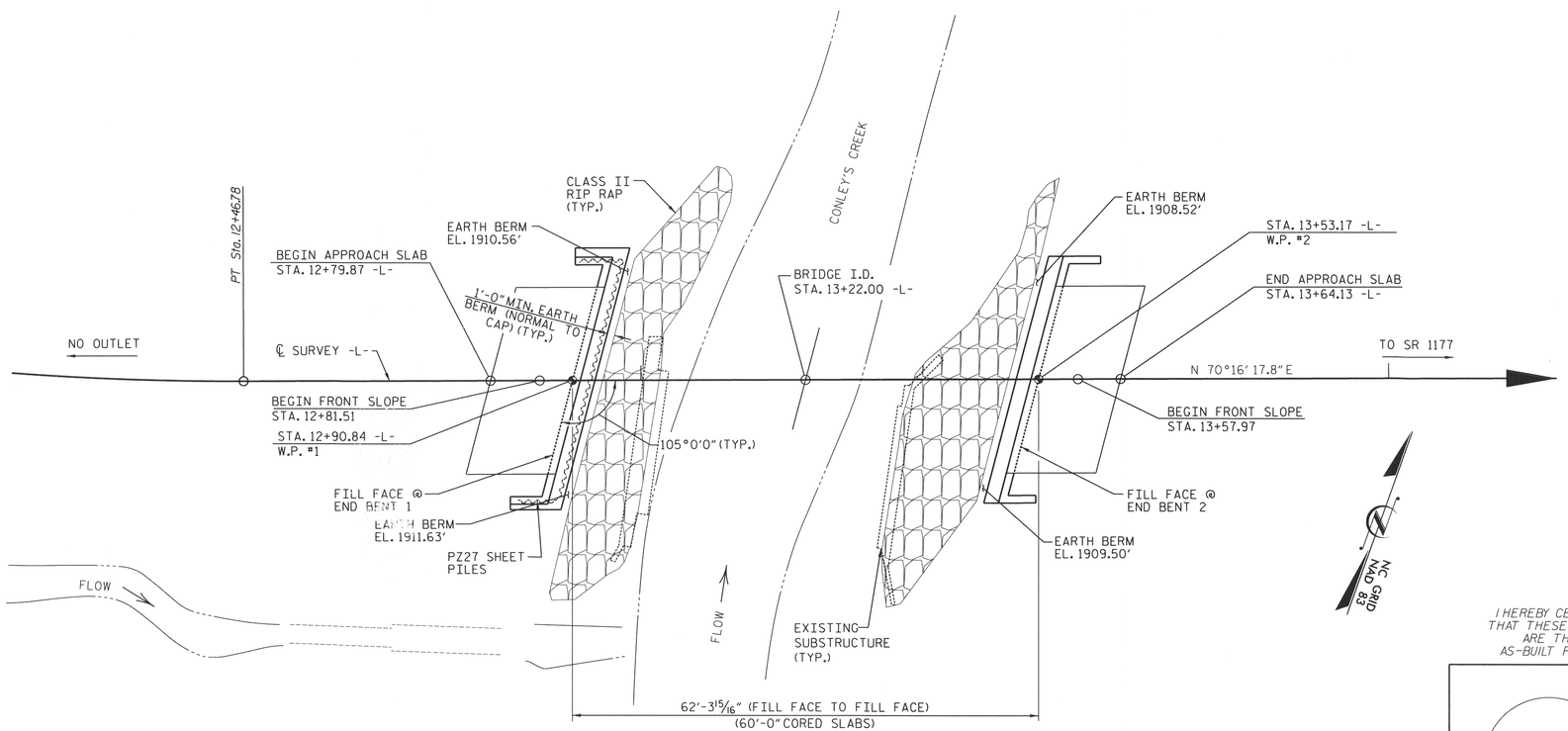

NOTE: END BENTS ARE PARALLEL.
PILES NOT SHOWN IN PLAN VIEW FOR CLARITY.
CORED SLABS ARE PARALLEL TO ℄ SURVEY -L-.

PLAN ALONG ℄ SURVEY -L-

PI Sta 12+11.88
Δ = 10° 01' 30.8" (LT)
D = 14° 19' 26.2"
L = 69.99'
T = 35.08'
R = 400.00'

HORIZONTAL CURVE DATA -L-

NORTH CAROLINA PROFESSIONAL SEAL 10777 ENGINEER HARDY L. WILLIS 3/19/13

PROJECT NO. BD-5114Q

SWAIN COUNTY

STATION: 13+22.00 -L-

SHEET 1 OF 2 REPLACES BRIDGE NO. 151

I HEREBY CERTIFY THAT THESE PLANS ARE THE AS-BUILT PLANS.

V&M Vaughn & Melton Consulting Engineers
Middlesboro, Kentucky 606-248-5600
Knoxville, Tennessee 865-546-5800
Asheville, North Carolina 828-253-2796
Copyright © 2006 Vaughn & Melton, Inc. All Rights Reserved

DRAWN BY: MAF DATE: FEB. 2013
CHECKED BY: HLW DATE: FEB. 2013

STATE OF NORTH CAROLINA
DEPARTMENT OF TRANSPORTATION
RALEIGH

GENERAL DRAWING

FOR BRIDGE on SR 1182
(WILLIAMSON RD.) over CONLEYS CREEK
Between End of Road & SR 1177

FEB. 2013

REVISIONS						SHEET NO.
NO.	BY:	DATE:	NO.	BY:	DATE:	S-1
1			3			TOTAL SHEETS
2			4			26

-BM-1 N 636493.4737 E 697835.1633 8" SPIKE SET IN ROOT OF 26" POPLAR ELEV. = 1985.02' S83°21'44"W DIST. 97.93' -BL-1- STATION 5+00.00

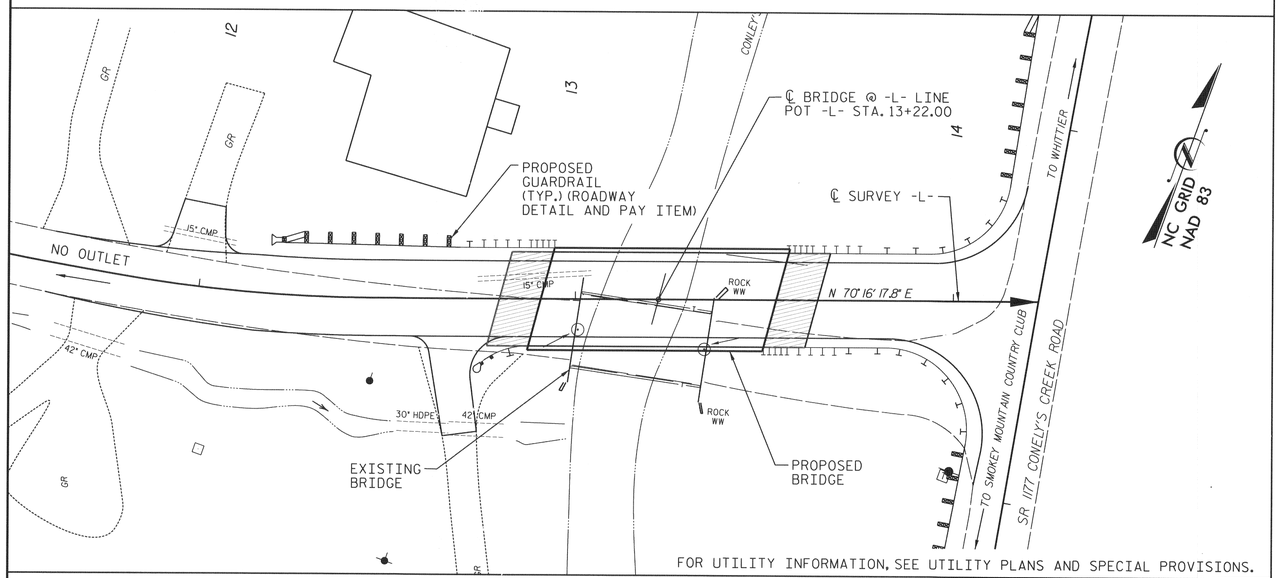

FOR UTILITY INFORMATION, SEE UTILITY PLANS AND SPECIAL PROVISIONS.

LOCATION SKETCH

GENERAL NOTES:

ASSUMED LIVE LOAD = HL-93 OR ALTERNATE LOADING.

THIS BRIDGE HAS BEEN DESIGNED IN ACCORDANCE WITH THE REQUIREMENTS OF THE AASHTO LRFD BRIDGE DESIGN SPECIFICATIONS.

THIS BRIDGE IS LOCATED IN SEISMIC ZONE 1.

FOR OTHER DESIGN DATA AND GENERAL NOTES, SEE SHEET SN.

FOR EROSION CONTROL MEASURES, SEE EROSION CONTROL PLANS.

THE EXISTING STRUCTURE, CONSISTING OF A SINGLE SPAN, 35.5 FOOT LONG TIMBER DECK ON STEEL I-BEAMS, 20-FEET WIDE, ON TIMBER PILE VERTICAL ABUTMENTS, LOCATED AT THE PROPOSED STRUCTURE, SHALL BE REMOVED.

REMOVAL OF THE EXISTING BRIDGE SHALL BE PERFORMED SO AS NOT TO ALLOW DEBRIS TO FALL INTO THE WATER. THE CONTRACTOR SHALL REMOVE THE BRIDGE AND SUBMIT PLANS FOR DEMOLITION IN ACCORDANCE WITH ARTICLE 402-2 OF THE STANDARD SPECIFICATIONS.

THE SUBSTRUCTURE OF THE EXISTING BRIDGE INDICATED ON THE PLANS IS FROM THE BEST INFORMATION AVAILABLE. SINCE THIS INFORMATION IS SHOWN FOR THE CONVENIENCE OF THE CONTRACTOR, THE CONTRACTOR SHALL HAVE NO CLAIM WHATSOEVER AGAINST THE DEPARTMENT OF TRANSPORTATION FOR ANY DELAYS OR ADDITIONAL COST INCURRED BASED ON DIFFERENCES BETWEEN THE EXISTING BRIDGE SUBSTRUCTURE SHOWN ON THE PLANS AND THE ACTUAL CONDITIONS AT THE PROJECT SITE.

THIS STRUCTURE HAS BEEN DESIGNED IN ACCORDANCE WITH "HEC 18, EVALUATING SCOUR AT BRIDGES".

FOR SUBMITTAL OF WORKING DRAWINGS, SEE SPECIAL PROVISIONS.

FOR FALSEWORK AND FORMWORK, SEE SPECIAL PROVISIONS.

FOR CRANE SAFETY, SEE SPECIAL PROVISIONS.

FOR GROUT FOR STRUCTURES, SEE SPECIAL PROVISIONS.

THE MATERIAL SHOWN IN THE CROSS-HATCHED AREA SHALL BE EXCAVATED FOR A DISTANCE OF 25 FT. EACH SIDE OF CENTERLINE ROADWAY AS DIRECTED BY THE ENGINEER. THIS WORK WILL BE PAID FOR AT THE CONTRACT LUMP SUM PRICE FOR UNCLASSIFIED STRUCTURE EXCAVATION. SEE SECTION 412 OF THE STANDARD SPECIFICATIONS.

ASPHALT WEARING SURFACE IS INCLUDED IN ROADWAY QUANTITY ON ROADWAY PLANS.

THE CONTRACTOR SHALL PROVIDE INDEPENDENT ASSURANCE SAMPLES OF REINFORCING STEEL AS FOLLOWS: FOR PROJECTS REQUIRING UP TO 400 TONS OF REINFORCING STEEL, ONE 30 INCH SAMPLE OF EACH SIZE BAR USED, AND FOR PROJECTS REQUIRING OVER 400 TONS OF REINFORCING STEEL, TWO 30 INCH SAMPLES OF EACH SIZE BAR USED. THE BARS FROM WHICH THE SAMPLES ARE TAKEN MUST THEN BE SPLICED WITH REPLACEMENT BARS OF THE SIZE AND LENGTH OF THE SAMPLE, PLUS A MINIMUM LAP SPLICE OF THIRTY BAR DIAMETERS. PAYMENT FOR THE SAMPLES OF REINFORCING STEEL SHALL BE CONSIDERED INCIDENTAL TO VARIOUS PAY ITEMS.

INASMUCH AS THE PAINT SYSTEM ON THE EXISTING STRUCTURAL STEEL CONTAINS LEAD, THE CONTRACTOR'S ATTENTION IS DIRECTED TO ARTICLE 107-1 OF THE STANDARD SPECIFICATIONS. ANY COSTS RESULTING FROM COMPLIANCE WITH APPLICABLE STATE OR FEDERAL REGULATIONS PERTAINING TO HANDLING OF MATERIALS CONTAINING LEAD BASED PAINT SHALL BE INCLUDED IN THE BID PRICE FOR "REMOVAL OF EXISTING STRUCTURE AT STATION 13+22.00 -L-."

FOR PILES, SEE SECTION 450 OF THE STANDARD SPECIFICATIONS.

PILES AT END BENT NO. 1 ARE DESIGNED FOR A FACTORED RESISTANCE OF 85 TONS PER PILE.

PILE EXCAVATION IS REQUIRED TO INSTALL PILES AT END BENT NO. 1. EXCAVATE HOLES AT PILE LOCATIONS TO ELEV. 1885.0 FT. FOR PILE EXCAVATION, SEE SECTION 450 OF THE STANDARD SPECIFICATIONS.

CONCRETE OR GROUT IS REQUIRED TO FILL HOLES FOR PILE EXCAVATION AT END BENT NO. 1.

PILES AT END BENT NO. 2 ARE DESIGNED FOR A FACTORED RESISTANCE OF 85 TONS PER PILE.

PILE EXCAVATION IS REQUIRED TO INSTALL PILES AT END BENT NO. 2. EXCAVATE HOLES AT PILE LOCATIONS TO ELEV. 1883.0 FT. FOR PILE EXCAVATION, SEE SECTION 450 OF THE STANDARD SPECIFICATIONS.

CONCRETE OR GROUT IS REQUIRED TO FILL HOLES FOR PILE EXCAVATION AT END BENT NO. 2.

PZ-27 SHEET PILES SHALL BE PLACED IN FRONT OF HP 12X53 PILES FOR STABILITY AT END BENT 1.

SHEET PILES SHALL BE INSTALLED TO AN ELEVATION OF 1895.0 FT. AT END BENT 1 TO ACCOUNT FOR THE SCOUR IMPACT AT END BENT 1.

SHEET PILES ARE DESIGNED FOR A SCOUR ELEVATION OF 1900.0 FT AT END BENT 1.

CONTROL OF CONSTRUCTION VIBRATIONS IS REQUIRED. SEE CONTROL OF VIBRATION SPECIAL PROVISION.

HYDRAULIC DATA

DESIGN DISCHARGE	= 1890 CFS
DESIGN FREQUENCY	= 10 YRS
DESIGN HW ELEVATION	= 1914.15 FT
BASE DISCHARGE	= 3560 CFS
BASE FREQUENCY	= 100 YRS
BASE HW ELEVATION	= 1916.67 FT

OVERTOPPING FLOOD DATA

OVERTOPPING DISCHARGE	= 2165 CFS
OVERTOPPING FREQUENCY	= 25(-) YRS
OVERTOPPING ELEVATION	= 1914.7 FT
DRAINAGE AREA	= 12.9 SQ. MI.

TOTAL BILL OF MATERIAL

	REMOVAL OF EXISTING STRUCTURE	PILE EXCAVATION IN SOIL	PILE EXCAVATION NOT IN SOIL	UNCLASSIFIED STRUCTURE EXCAVATION	CLASS A CONCRETE	BRIDGE APPROACH SLABS	REINFORCING STEEL	HP 12 X 53 STEEL PILES		TEMP. SHORING	VERTICAL CONCRETE BARRIER RAIL	RIP RAP CLASS II (2'-0" THICK)	GEOTEXTILE FOR DRAINAGE	ELASTOMERIC BEARINGS	3'-0" x 2'-0" PRESTRESSED CONCRETE CORED SLAB UNIT		18" STEEL SHEET PILES	VIBRATION MONITORING
	LUMP SUM	LIN. FT.	LIN. FT.	LUMP SUM	CU. YARDS	LUMP SUM	LBS.	NO.	LIN. FT.	SQ. FT.	LIN. FT.	TONS	SQ. YARDS	LUMP SUM	NO.	LIN. FT.	SQ. FT.	LUMP SUM
SUPERSTRUCTURE						LUMP SUM					120.26			LUMP SUM	9	540.0		
END BENT 1		125	25	LUMP SUM	19.7		2,326	5	150	270		60	67				918	
END BENT 2		138	25	LUMP SUM	12.8		1,893	5	165			65	73					
TOTAL	LUMP SUM	263	50	LUMP SUM	32.5	LUMP SUM	4,219	10	315	270	120.26	125	140	LUMP SUM	9	540.0	918	LUMP SUM

NORTH CAROLINA PROFESSIONAL SEAL 030774 ENGINEER HARDY L. WILLIS
5/19/13

V&M Vaughn & Melton Consulting Engineers
Middlesboro, Kentucky 606-248-8606
Knoxville, Tennessee 865-546-5800
Asheville, North Carolina 828-253-2796
Copyright © 2006 Vaughn & Melton, Inc. All Rights Reserved

DRAWN BY: MAF DATE: FEB. 2013
CHECKED BY: HLW DATE: FEB. 2013

PROJECT NO. BD-5114Q
SWAIN COUNTY
STATION: 13+22.00 -L-

SHEET 2 OF 2

STATE OF NORTH CAROLINA
DEPARTMENT OF TRANSPORTATION
RALEIGH

GENERAL DRAWING
FOR BRIDGE on SR 1182
(WILLIAMSON RD.) over CONLEYS CREEK
Between End of Road & SR 1177

FEB. 2013

REVISIONS						SHEET NO.
NO.	BY:	DATE:	NO.	BY:	DATE:	S-2
1			3			TOTAL SHEETS
2			4			26

NOTES

FOR TEMPORARY GUARDRAIL DETAILS AND PAY ITEM, SEE ROADWAY PLANS.

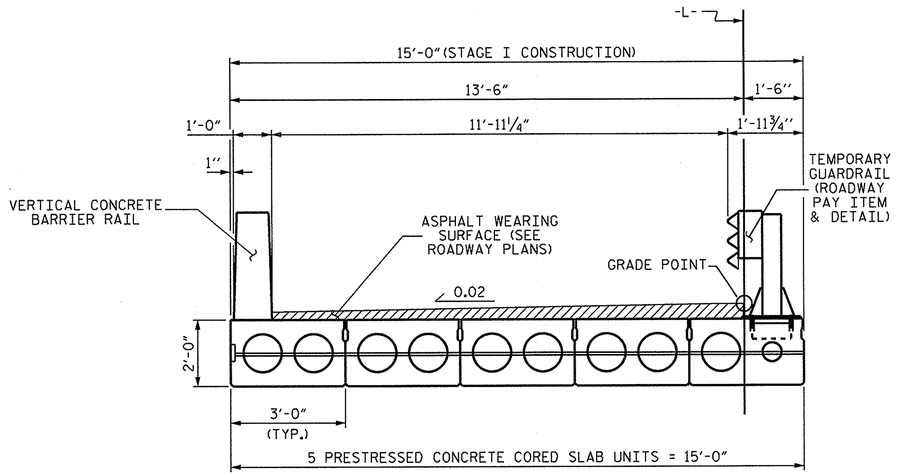

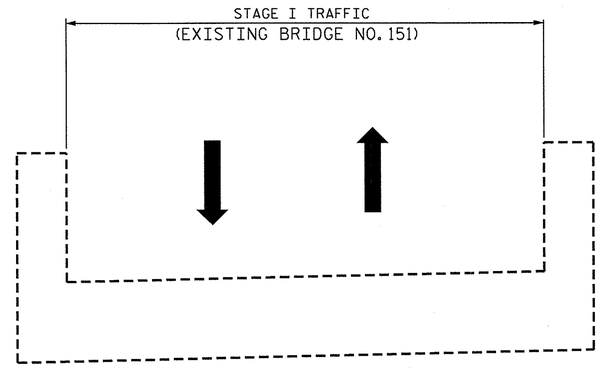

STAGE I

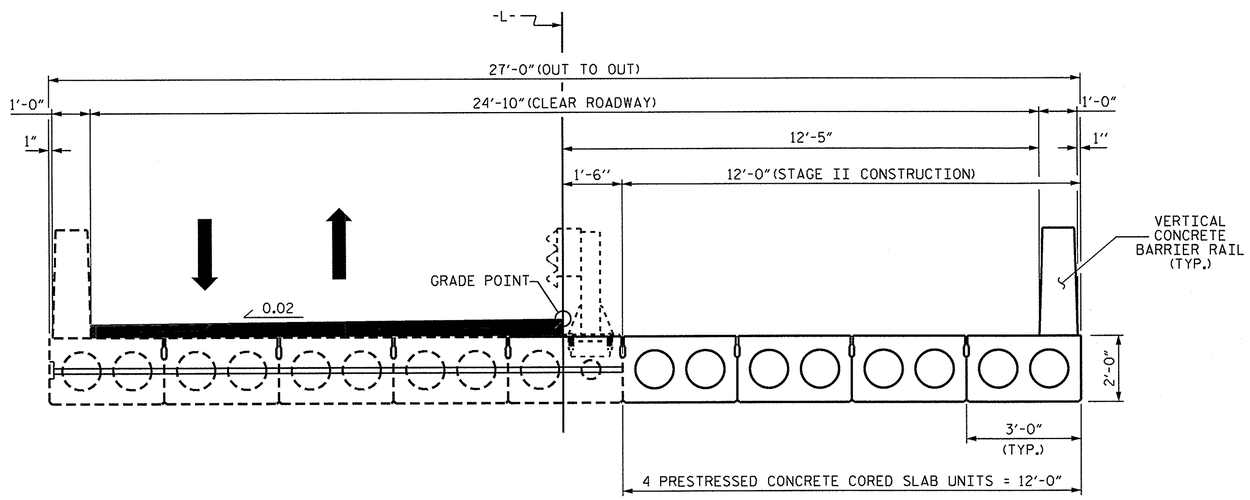

STAGE II

STAGING SEQUENCE

PROJECT NO. BD-5114Q
SWAIN COUNTY
STATION: 13+22.00 -L-

STATE OF NORTH CAROLINA
DEPARTMENT OF TRANSPORTATION
RALEIGH

CONSTRUCTION STAGING

NORTH CAROLINA PROFESSIONAL SEAL 15779 ENGINEER JOHN R. DUGGINS, JR.
2/18/13

REVISIONS							SHEET NO.
NO.	BY:	DATE:	NO.	BY:	DATE:		5-3
1			3				TOTAL SHEETS
2			4				26

DRAWN BY : B. MATHEW DATE : 02/12
CHECKED BY : J. R. DUGGINS DATE : 01/13

18-FEB-2013 15:18
S:\DPG4\John\LIBR_Files\BD-51140\Final Plans\BD-51140_SD_S*.dgn
jduggins

LOAD AND RESISTANCE FACTOR RATING (LRFD) SUMMARY FOR PRESTRESSED CONCRETE GIRDERS

LEVEL		VEHICLE	WEIGHT (W) (TONS)	CONTROLLING LOAD RATING	MINIMUM RATING FACTORS (RF)	TONS = W X RF	STRENGTH I LIMIT STATE											SERVICE III LIMIT STATE						COMMENT NUMBER
								MOMENT					SHEAR						MOMENT					
							LIVELOAD FACTORS	DISTRIBUTION FACTORS (DF)	RATING FACTOR	SPAN	GIRDER LOCATION	DISTANCE FROM LEFT END OF SPAN (ft)	DISTRIBUTION FACTORS (DF)	RATING FACTOR	SPAN	GIRDER LOCATION	DISTANCE FROM LEFT END OF SPAN (ft)	LIVELOAD FACTORS	DISTRIBUTION FACTORS (DF)	RATING FACTOR	SPAN	GIRDER LOCATION	DISTANCE FROM LEFT END OF SPAN (ft)	
DESIGN LOAD RATING		HL-93(Inv)	N/A	**1**	1.128	--	1.75	0.27	1.35	60′	EL	29.482	0.608	**1.13**	60′	EL	**2.948**	0.80	0.27	1.39	60′	EL	29.482	
		HL-93(Opr)	N/A	--	1.463	--	1.35	0.27	1.76	60′	EL	29.482	0.608	1.46	60′	EL	2.948	N/A	--	--	--	--	--	
		HS-20(Inv)	36.000	**2**	1.381	49.722	1.75	0.27	1.72	60′	EL	29.482	0.608	**1.38**	60′	EL	**2.948**	0.80	0.27	1.76	60′	EL	29.482	
		HS-20(Opr)	36.000	--	1.79	64.455	1.35	0.27	2.22	60′	EL	29.482	0.608	1.79	60′	EL	2.948	N/A	--	--	--	--	--	
LEGAL LOAD RATING	SV	SNSH	13.500	--	3.791	51.185	1.4	0.27	4.62	60′	EL	29.482	0.608	4.02	60′	EL	2.948	0.80	0.27	3.79	60′	EL	29.482	
		SNGARBS2	20.000	--	2.888	57.751	1.4	0.27	3.53	60′	EL	29.482	0.608	2.89	60′	EL	2.948	0.80	0.27	2.90	60′	EL	29.482	
		SNAGRIS2	22.000	--	2.691	59.194	1.4	0.27	3.39	60′	EL	29.482	0.608	2.69	60′	EL	2.948	0.80	0.27	2.78	60′	EL	29.482	
		SNCOTTS3	27.250	--	1.889	51.473	1.4	0.27	2.3	60′	EL	29.482	0.608	2.01	60′	EL	2.948	0.80	0.27	1.89	60′	EL	29.482	
		SNAGGRS4	34.925	--	1.608	56.157	1.4	0.27	1.96	60′	EL	29.482	0.608	1.69	60′	EL	2.948	0.80	0.27	1.61	60′	EL	29.482	
		SNS5A	35.550	--	1.57	55.826	1.4	0.27	1.91	60′	EL	29.482	0.608	1.72	60′	EL	2.948	0.80	0.27	1.57	60′	EL	29.482	
		SNS6A	39.950	--	1.453	58.064	1.4	0.27	1.77	60′	EL	29.482	0.608	1.58	60′	EL	2.948	0.80	0.27	1.45	60′	EL	29.482	
		SNS7B	42.000	--	1.385	58.152	1.4	0.27	1.69	60′	EL	29.482	0.608	1.56	60′	EL	2.948	0.80	0.27	1.38	60′	EL	29.482	
	TTST	TNAGRIT3	33.000	--	1.776	58.612	1.4	0.27	2.16	60′	EL	29.482	0.608	1.87	60′	EL	2.948	0.80	0.27	1.78	60′	EL	29.482	
		TNT4A	33.075	--	1.787	59.12	1.4	0.27	2.18	60′	EL	29.482	0.608	1.81	60′	EL	2.948	0.80	0.27	1.79	60′	EL	29.482	
		TNT6A	41.600	--	1.474	61.31	1.4	0.27	1.79	60′	EL	29.482	0.608	1.68	60′	EL	2.948	0.80	0.27	1.47	60′	EL	29.482	
		TNT7A	42.000	--	1.488	62.489	1.4	0.27	1.81	60′	EL	29.482	0.608	1.62	60′	EL	2.948	0.80	0.27	1.49	60′	EL	29.482	
		TNT7B	42.000	--	1.515	63.636	1.4	0.27	1.89	60′	EL	29.482	0.608	1.52	60′	EL	2.948	0.80	0.27	1.55	60′	EL	29.482	
		TNAGRIT4	43.000	--	1.464	62.958	1.4	0.27	1.79	60′	EL	29.482	0.608	1.46	60′	EL	2.948	0.80	0.27	1.47	60′	EL	29.482	
		TNAGT5A	45.000	--	1.378	62.016	1.4	0.27	1.68	60′	EL	29.482	0.608	1.47	60′	EL	2.948	0.80	0.27	1.38	60′	EL	29.482	
		TNAGT5B	45.000	**3**	1.356	61.038	1.4	0.27	1.65	60′	EL	29.482	0.608	1.39	60′	EL	2.948	0.80	0.27	**1.36**	60′	EL	**29.482**	

LOAD FACTORS:

DESIGN LOAD RATING FACTORS	LIMIT STATE	γ_{DC}	γ_{DW}
	STRENGTH I	1.25	1.50
	SERVICE III	1.00	1.00

NOTES:

MINIMUM RATING FACTORS ARE BASED ON THE STRENGTH I AND SERVICE III LIMIT STATES.

ALLOWABLE STRESSES FOR SERVICE III LIMIT STATE ARE AS REQUIRED FOR DESIGN.

COMMENTS:

1.
2.
3.
4.

(#) CONTROLLING LOAD RATING

(1) DESIGN LOAD RATING (HL-93)

(2) DESIGN LOAD RATING (HS-20)

(3) LEGAL LOAD RATING **

** SEE CHART FOR VEHICLE TYPE

GIRDER LOCATION

I - INTERIOR GIRDER
EL - EXTERIOR LEFT GIRDER
ER - EXTERIOR RIGHT GIRDER

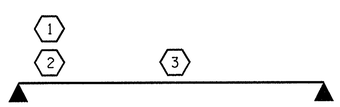

LRFR SUMMARY

FOR SPAN A

PROJECT NO. BD-5114Q

SWAIN COUNTY

STATION: 13+22.00 -L-

STATE OF NORTH CAROLINA
DEPARTMENT OF TRANSPORTATION
RALEIGH

STANDARD

LRFR SUMMARY FOR 60′ CORED SLAB UNIT 75° SKEW & 105° SKEW (NON-INTERSTATE TRAFFIC)

NORTH CAROLINA PROFESSIONAL SEAL 15779 ENGINEER JOHN R. DUGGINS, JR.

2/18/13

REVISIONS								SHEET NO.
NO.	BY:	DATE:	NO.	BY:	DATE:			S-4
1			3					TOTAL SHEETS
2			4					26

ASSEMBLED BY : B. MATHEW DATE : 02/12
CHECKED BY : J. R. DUGGINS DATE : 01/13

DRAWN BY : CVC 6/10
CHECKED BY : DNS 6/10

18-FEB-2013 15:19
S:\DPG4\John\LIBR_Files\BD-51140\Final Plans\BD-51140_SD_LRFR.dgn
jduggins

STD. NO. 24LRFR1_75&105S_60L

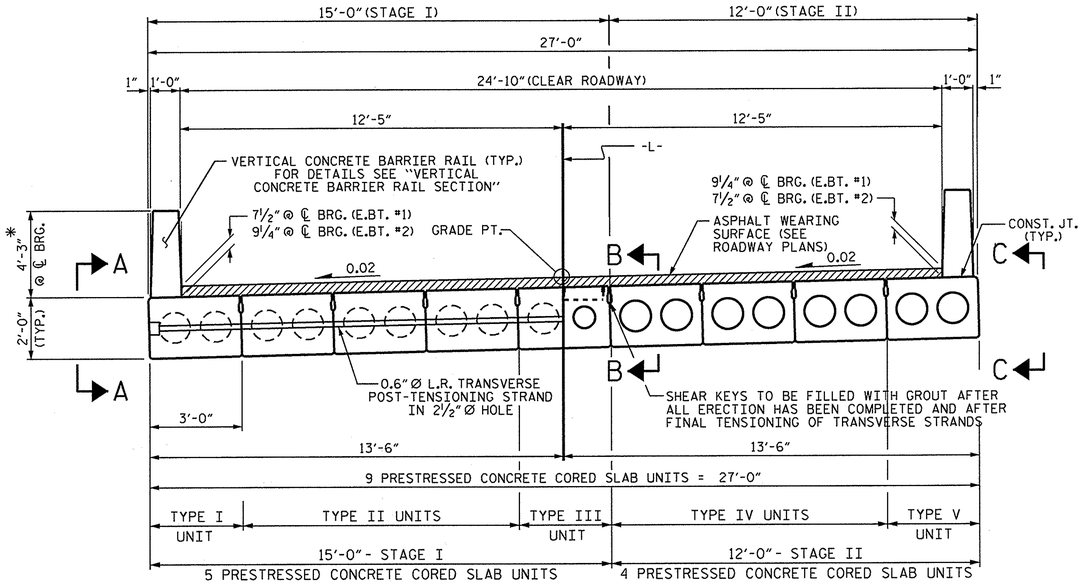

HALF SECTION
AT INTERMEDIATE DIAPHRAGMS

HALF SECTION
THROUGH VOIDS

TYPICAL SECTION

* - THE MAXIMUM BARRIER RAIL HEIGHT AND ASPHALT THICKNESS IS SHOWN. THE HEIGHT OF THE BARRIER RAIL AND ASPHALT THICKNESS VARIES WHILE THE TOP OF THE BARRIER RAIL FOLLOWS THE PROFILE OF THE GUTTERLINE. FOR RAIL HEIGHT DETAILS AND ASPHALT THICKNESS, SEE THE "VERTICAL CONCRETE BARRIER RAIL SECTION" DETAIL.

FIXED END

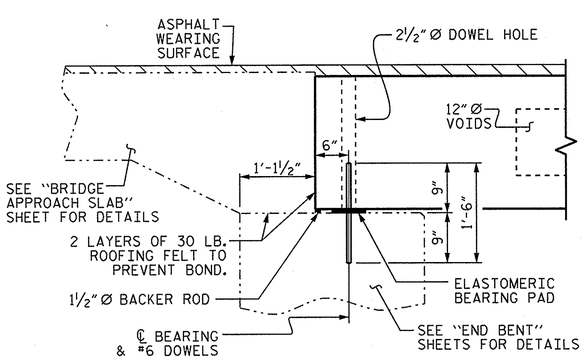

SECTION AT END BENT

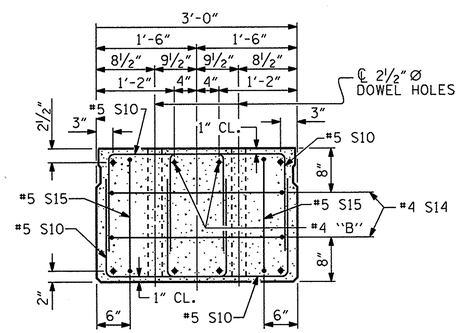

END ELEVATION

SHOWING PLACEMENT OF DOUBLE STIRRUPS AND LOCATION OF DOWEL HOLES. (STRAND LAYOUT NOT SHOWN.) INTERIOR SLAB UNIT SHOWN-EXTERIOR SLAB UNIT SIMILAR EXCEPT SHEAR KEY LOCATION.

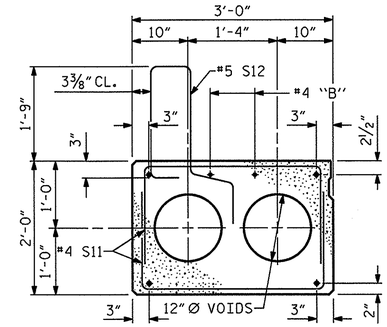

EXTERIOR SLAB SECTION (TYPE I & V)

(FOR PRESTRESSED STRAND LAYOUT, SEE INTERIOR SLAB SECTION-TYPE II & IV)

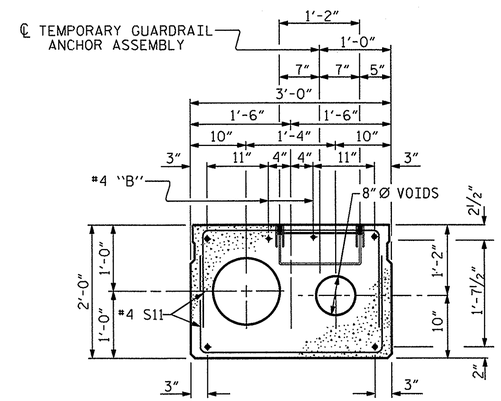

INTERIOR SLAB SECTION FOR 60' UNIT (TYPE III)

(FOR PRESTRESSED STRAND LAYOUT, SEE "INTERIOR SLAB SECTION - TYPE II & IV")

FOR TEMPORARY GUARDRAIL ANCHOR ASSEMBLY LOCATION, SEE SECTION OF ANCHOR ASSEMBLY LOCATION ON "ANCHORAGE DETAILS FOR TEMPORARY GUARDRAIL ANCHOR ASSEMBLY FOR TYPE III CORED SLAB UNIT" SHEET.

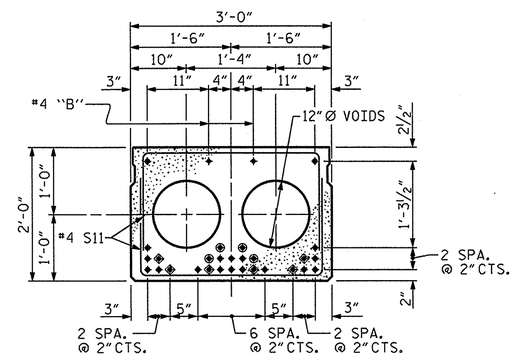

INTERIOR SLAB SECTION FOR 60' UNIT (TYPE II & IV)

(24 STRANDS REQUIRED)

0.6" Ø LOW RELAXATION STRAND LAYOUT

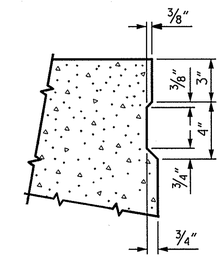

SHEAR KEY DETAIL

NOTE: OMIT SHEAR KEY ON OUTSIDE FACE OF EXTERIOR CORED SLABS.

◆ BOND SHALL BE BROKEN ON THESE STRANDS FOR A DISTANCE OF 12'-0" FROM END OF CORED SLAB UNIT. SEE STANDARD SPECIFICATIONS, ARTICLE 1078-7.

◉ OPTIONAL FULL LENGTH DEBONDED STRANDS. THESE STRANDS ARE NOT REQUIRED. IF THE FABRICATOR CHOOSES TO INCLUDE THESE STRANDS IN THE CORED SLAB UNIT, THE STRANDS SHALL BE DEBONDED FOR THE FULL LENGTH OF THE UNIT AT NO ADDITIONAL COST. SEE STANDARD SPECIFICATIONS, ARTICLE 1078-7.

DEBONDING LEGEND

PROJECT NO. BD-5114Q
SWAIN COUNTY
STATION: 13+22.00 -L-

SHEET 1 OF 5

STATE OF NORTH CAROLINA
DEPARTMENT OF TRANSPORTATION
RALEIGH

3'-0" X 2'-0"
PRESTRESSED CONCRETE
CORED SLAB UNIT

NORTH CAROLINA PROFESSIONAL SEAL 15779 ENGINEER JOHN R. DUGGINS, JR.
2/18/13

REVISIONS								SHEET NO.
NO.	BY:	DATE:	NO.	BY:	DATE:			S-5
1			3					TOTAL SHEETS
2			4					26

ASSEMBLED BY :	B. MATHEW	DATE :	02/12
CHECKED BY :	J. R. DUGGINS	DATE :	01/13
DRAWN BY : MAA 6/10	REV. 12/11 MAA/AAC		
CHECKED BY : MKT 7/10			

18-FEB-2013 15:46
S:\DPG4\John\LIBR_Files\BD-51140\Final Plans\BD-51140_SD_S*.dgn
jduggins

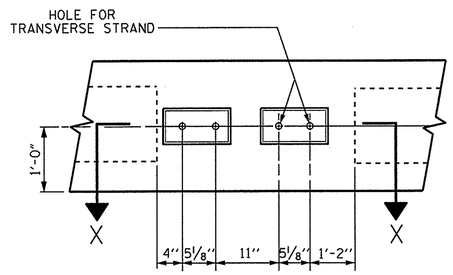

VIEW A-A
SEE "TYPICAL SECTION"
SHEET 1 OF 5

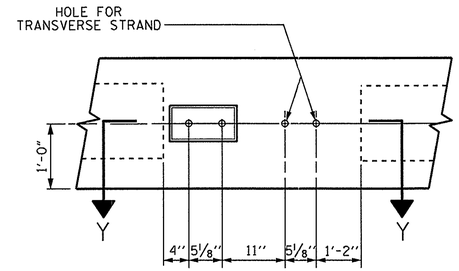

VIEW B-B
SEE "TYPICAL SECTION"
SHEET 1 OF 5

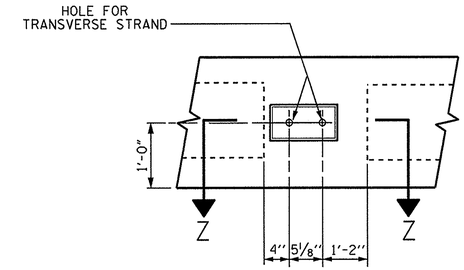

VIEW C-C
SEE "TYPICAL SECTION"
SHEET 1 OF 5

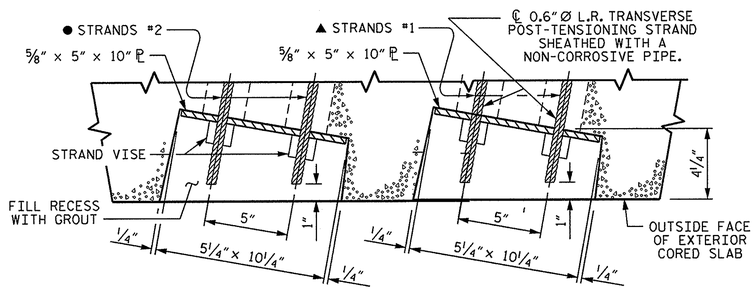

SECTION X-X
(TYPE I UNIT)

UP-STATION

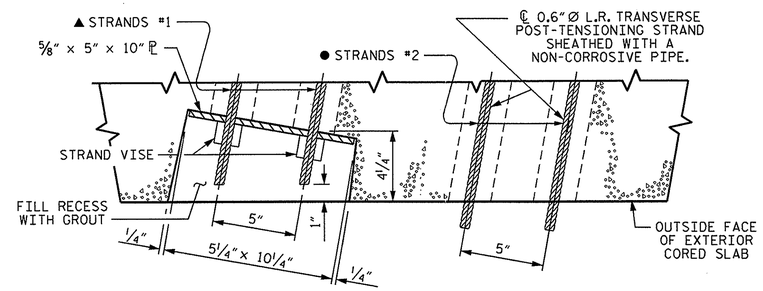

SECTION Y-Y
(TYPE III UNIT)

UP-STATION

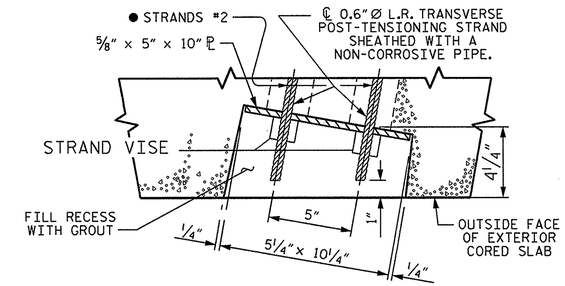

SECTION Z-Z
(TYPE V UNIT)

UP-STATION

GROUTED RECESS AT END OF POST-TENSIONED STRAND

▲ STRAND #1 GOES THRU 5 CORED SLAB UNITS (TO BE TENSIONED DURING STAGE I CONSTRUCTION)

● STRAND #2 GOES THRU ALL 9 CORED SLAB UNITS (TO BE TENSIONED DURING STAGE II CONSTRUCTION)

PROJECT NO. BD-5114Q
SWAIN COUNTY
STATION: 13+22.00 -L-

SHEET 2 OF 5

STATE OF NORTH CAROLINA
DEPARTMENT OF TRANSPORTATION
RALEIGH

3'-0" X 2'-0"
PRESTRESSED CONCRETE
CORED SLAB UNIT

NORTH CAROLINA PROFESSIONAL SEAL 15779 ENGINEER JOHN R. DUGGINS, JR.
2/18/13

REVISIONS						SHEET NO.
NO.	BY:	DATE:	NO.	BY:	DATE:	S-6
1			3			TOTAL SHEETS
2			4			26

DRAWN BY : B. MATHEW DATE : 02/2012
CHECKED BY : J. R. DUGGINS DATE : 01/13

18-FEB-2013 15:47
S:\OPGS\John\LIBR_Files\BD-51140\Final Plans\BD-51140_SD_S*.dgn
jduggins

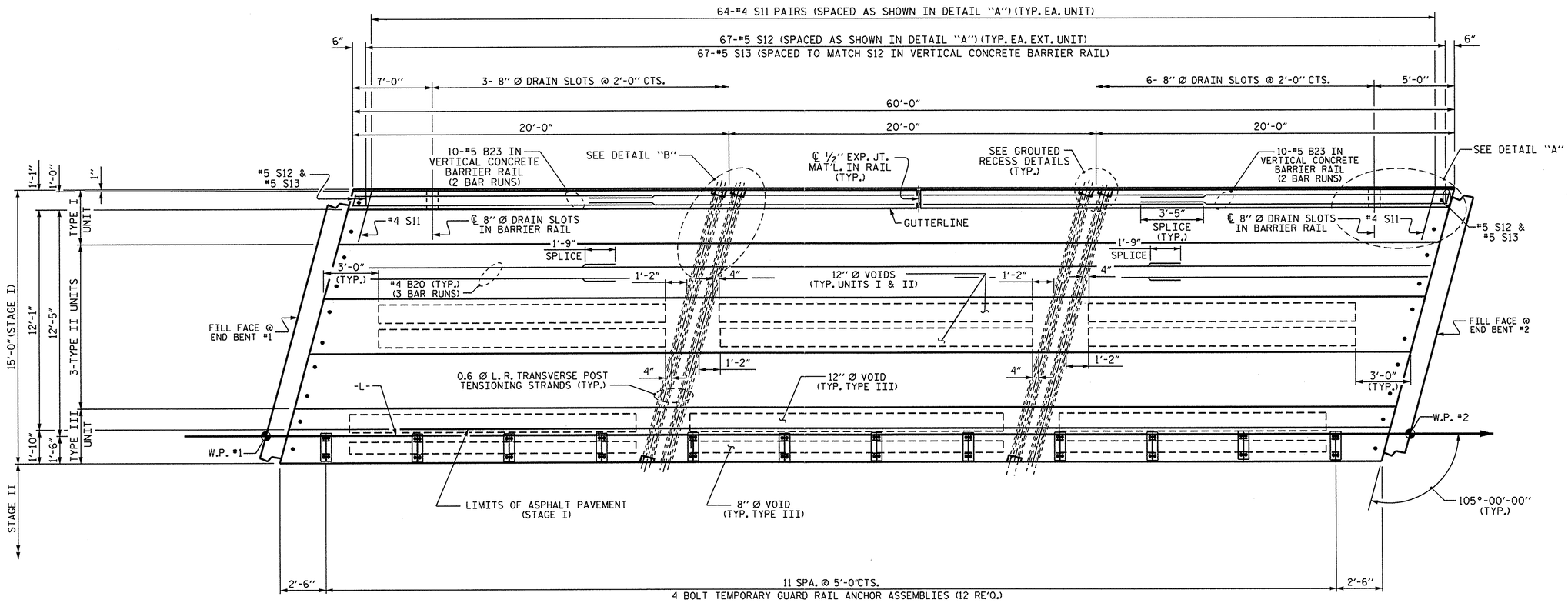

PLAN OF UNIT
(STAGE I)

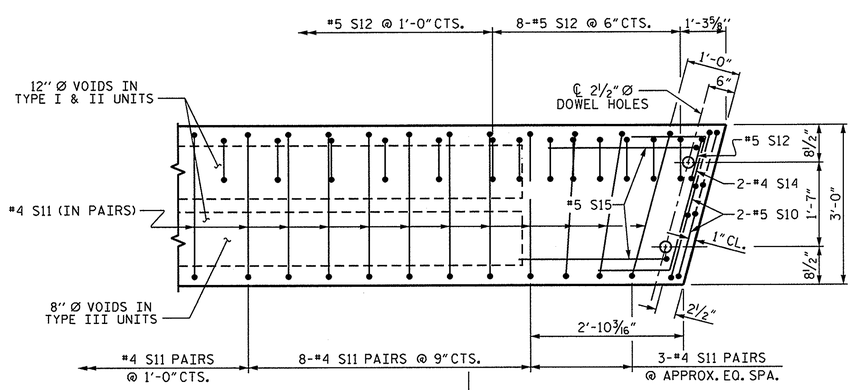

DETAIL "A"

NOTE: EXTERIOR UNIT SHOWN - INTERIOR UNIT SIMILAR EXCEPT OMIT #5 S12 BARS.

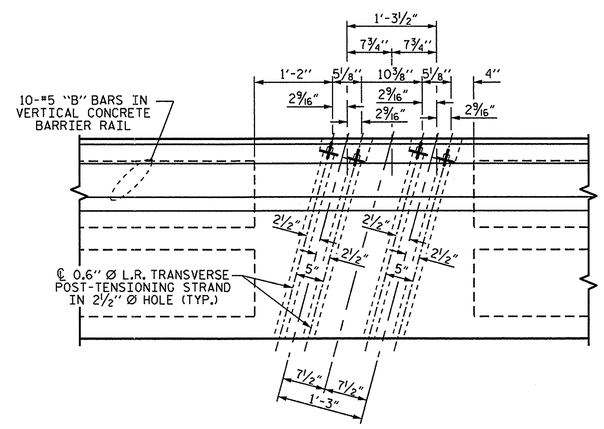

DETAIL "B"

#4 S11 BARS MAY BE SHIFTED AS NECESSARY TO MAINTAIN 1" CLEAR TO GROUTED RECESS AND 2 1/2" Ø TRANSVERSE POST-TENSIONING STRAND HOLES

PROJECT NO. BD-5114Q
SWAIN COUNTY
STATION: 13+22.00 -L-

SHEET 3 OF 5

STATE OF NORTH CAROLINA
DEPARTMENT OF TRANSPORTATION
RALEIGH

PLAN OF 60' UNIT
24'-10" CLEAR ROADWAY
105° SKEW
(STAGE 1)

NORTH CAROLINA PROFESSIONAL SEAL 15779 ENGINEER JOHN R. DUGGINS, JR.
2/18/13

REVISIONS								SHEET NO.
NO.	BY:	DATE:	NO.	BY:	DATE:			S-7
1			3					TOTAL SHEETS
2			4					26

ASSEMBLED BY :	B. MATHEW	DATE :	02/2012
CHECKED BY :	J. R. DUGGINS	DATE :	01/13
DRAWN BY : MAA 6/10	REV. 12/5/11 MAA/AAC		
CHECKED BY : MKT 7/10			

18-FEB-2013 15:47
S:\DPG4\John\LIBR_Files\BD-5114Q\Final Plans\BD-5114Q_SD_S*.dgn
jduggins

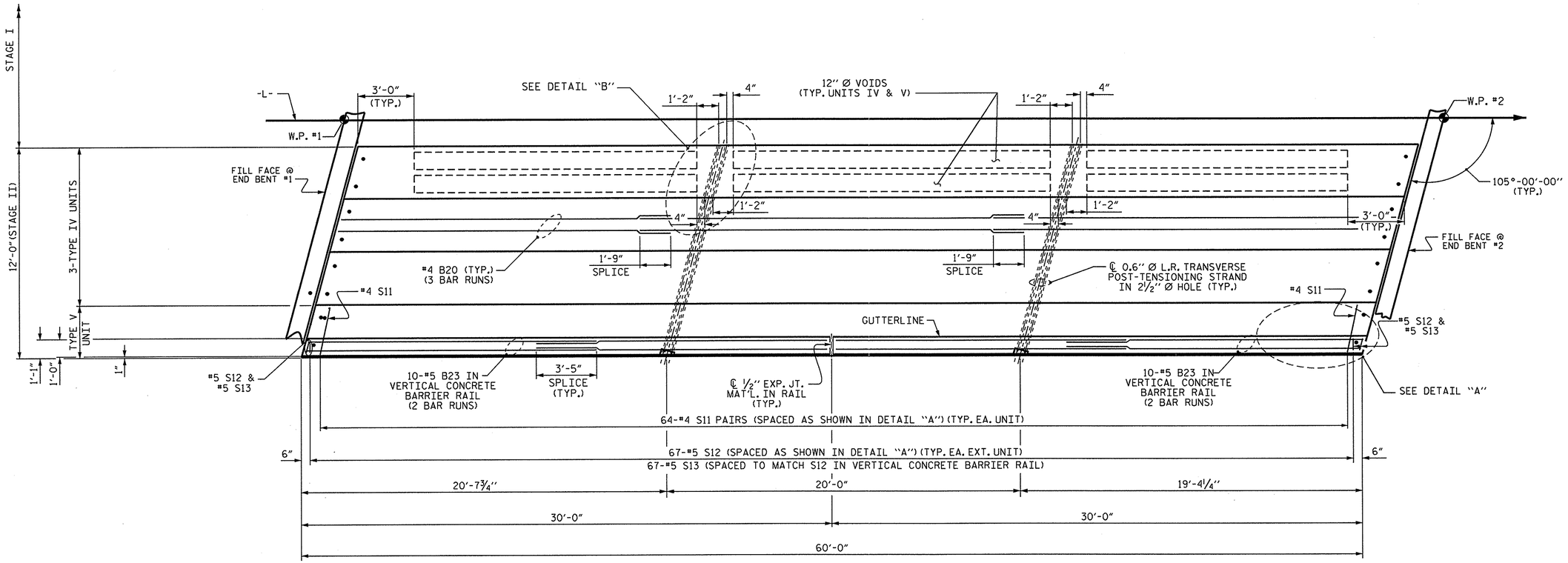

PLAN OF UNIT

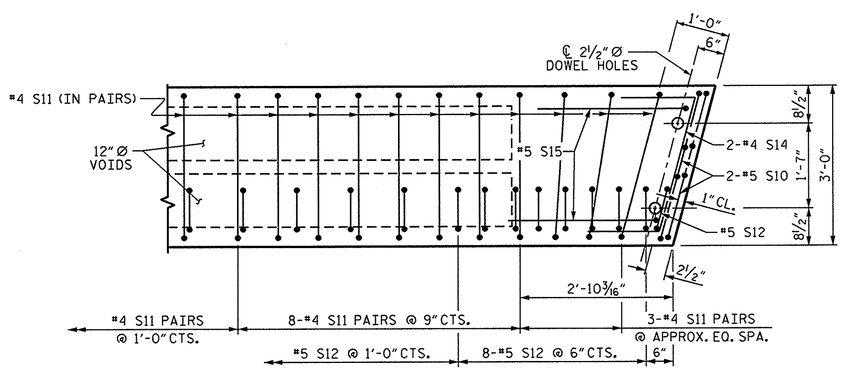

DETAIL "A"

NOTE: EXTERIOR UNIT SHOWN - INTERIOR UNIT SIMILAR EXCEPT OMIT #5 S12 BARS.

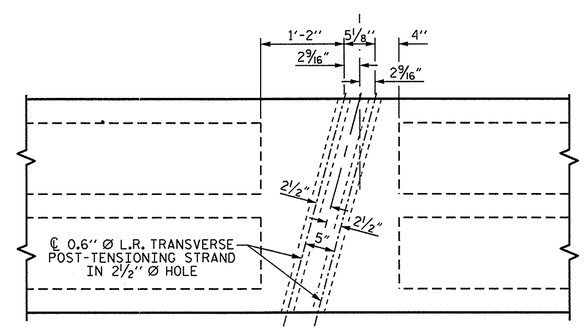

DETAIL "B"

#4 S11 BARS MAY BE SHIFTED AS NECESSARY TO MAINTAIN 1" CLEAR TO GROUTED RECESS AND 2½" Ø TRANSVERSE POST-TENSIONING STRAND HOLES

PROJECT NO. BD-5114Q

SWAIN COUNTY

STATION: 13+22.00 -L-

SHEET 4 OF 5

STATE OF NORTH CAROLINA
DEPARTMENT OF TRANSPORTATION
RALEIGH

PLAN OF 60' UNIT
24'-10" CLEAR ROADWAY
105° SKEW
(STAGE II)

NORTH CAROLINA PROFESSIONAL SEAL 15779 ENGINEER JOHN R. DUGGINS, JR.
2/18/13

REVISIONS							SHEET NO.
NO.	BY:	DATE:	NO.	BY:	DATE:		S-8
1			3				TOTAL SHEETS
2			4				26

ASSEMBLED BY : B. MATHEW		DATE : 02/2012	
CHECKED BY : J. R. DUGGINS		DATE : 01/13	
DRAWN BY : MAA	6/10	REV. 12/5/11	MAA/AAC
CHECKED BY : MKT	7/10		

18-FEB-2013 15:17
S:\DPG4\John\LIBR_Files\BD-51140\Final Plans\BD-51140_SD_S*.dgn
jduggins

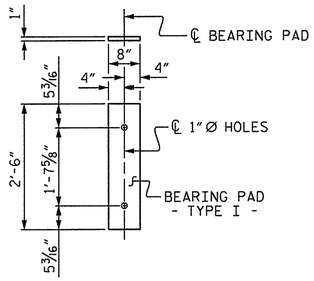

FIXED END
(TYPE I - 18 REQ'D)

ELASTOMERIC BEARING DETAILS

ELASTOMER IN ALL BEARINGS SHALL BE 60 DUROMETER HARDNESS.

GRADE 270 STRANDS	
	0.6" Ø L.R.
AREA (SQUARE INCHES)	0.217
ULTIMATE STRENGTH (LBS. PER STRAND)	58,600
APPLIED PRESTRESS (LBS. PER STRAND)	43,950

BILL OF MATERIAL FOR ONE 60' CORED SLAB UNIT

				EXTERIOR UNIT		INTERIOR UNIT	
BAR	NUMBER	SIZE	TYPE	LENGTH	WEIGHT	LENGTH	WEIGHT
B20	6	#4	STR	21'-2"	85	21'-2"	85
S10	8	#5	3	4'-10"	40	4'-10"	40
S11	128	#4	3	5'-10"	499	5'-10"	499
*S12	69	#5	1	6'-4"	456		
S14	4	#4	4	5'-8"	15	5'-8"	15
S15	4	#5	3	7'-1"	30	7'-1"	30
REINFORCING STEEL			LBS.		669		669
*EPOXY COATED REINFORCING STEEL			LBS.		456		
6000 P.S.I. CONCRETE			CU. YDS.		10.3		10.3
0.6" Ø L.R. STRANDS			No.		24		24

BAR TYPES

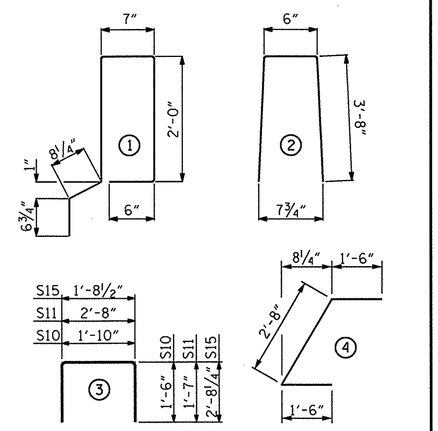

ALL BAR DIMENSIONS ARE OUT TO OUT

NOTES

ALL PRESTRESSING STRANDS SHALL BE 7-WIRE LOW RELAXATION GRADE 270 STRANDS AND SHALL CONFORM TO AASHTO M203 EXCEPT FOR SAMPLING REQUIREMENTS WHICH SHALL BE IN ACCORDANCE WITH THE STANDARD SPECIFICATIONS.

ALL REINFORCING STEEL CAST WITH THE CORED SLAB SECTIONS SHALL BE GRADE 60 AND SHALL BE INCLUDED IN THE UNIT PRICE BID FOR PRESTRESSED CONCRETE CORED SLABS.

RECESSES FOR TRANSVERSE STRANDS SHALL BE GROUTED AFTER THE TENSIONING OF THE STRANDS.

THE 2 1/2" Ø DOWEL HOLES AT FIXED ENDS OF SLAB SECTIONS SHALL BE FILLED WITH NON-SHRINK GROUT.

THE BACKER RODS SHALL CONFORM TO THE REQUIREMENTS OF TYPE M BOND BREAKER. SEE SECTION 1028 OF THE STANDARD SPECIFICATIONS.

WHEN CORED SLABS ARE CAST, AN INTERNAL HOLD-DOWN SYSTEM SHALL BE EMPLOYED TO PREVENT VOIDS FROM RISING OR MOVING SIDEWAYS. AT LEAST SIX WEEKS PRIOR TO CASTING CORED SLABS, THE CONTRACTOR SHALL SUBMIT TO THE ENGINEER FOR REVIEW AND COMMENT, DETAILED DRAWINGS OF THE PROPOSED HOLD-DOWN SYSTEM. IN ADDITION TO STRUCTURAL DETAILS, LOCATION AND SPACING OF THE HOLD-DOWNS SHALL BE INDICATED.

THE TRANSFER OF LOAD FROM THE ANCHORAGES TO THE CORED SLAB UNIT SHALL BE DONE WHEN THE CONCRETE HAS REACHED A COMPRESSIVE STRENGTH OF NOT LESS THAN THE REQUIRED STRENGTH SHOWN IN THE "CONCRETE RELEASE STRENGTH" TABLE.

ALL REINFORCING STEEL IN VERTICAL CONCRETE BARRIER RAILS SHALL BE EPOXY COATED.

PRESTRESSING STRANDS SHALL BE CUT FLUSH WITH THE CORED SLAB UNIT ENDS.

APPLY EPOXY PROTECTIVE COATING TO CORED SLAB UNIT ENDS.

GROOVED CONTRACTION JOINTS, 1/2" IN DEPTH, SHALL BE TOOLED IN ALL EXPOSED FACES OF THE BARRIER RAIL AND IN ACCORDANCE WITH ARTICLE 825-10(B) OF THE STANDARD SPECIFICATIONS. A CONTRACTION JOINT SHALL BE LOCATED AT EACH THIRD POINT BETWEEN BARRIER RAIL EXPANSION JOINTS. ONLY ONE CONTRACTION JOINT IS REQUIRED AT MIDPOINT OF BARRIER RAIL SEGMENTS LESS THAN 20 FEET IN LENGTH AND NO CONTRACTION JOINTS ARE REQUIRED FOR THOSE SEGMENTS LESS THAN 10 FEET IN LENGTH.

TRANSVERSE POST TENSIONING OF THE CORED SLAB UNITS SHALL BE DONE IN ACCORDANCE WITH THE STANDARD SPECIFICATIONS.

MAINTAIN A SYMMETRIC TENSION FORCE BETWEEN EACH PAIR OF TRANSVERSE POST TENSIONING STRANDS IN THE DIAPHRAGM.

THE #4 S11 STIRRUPS MAY BE SHIFTED AS NECESSARY TO MAINTAIN 1" CLEAR TO THE GROUTED RECESS.

FOR GROUT FOR STRUCTURES, SEE SPECIAL PROVISIONS.

BILL OF MATERIAL FOR VERTICAL CONCRETE BARRIER RAIL

BAR	BARS PER PAIR OF EXTERIOR UNITS	TOTAL NO.	SIZE	TYPE	LENGTH	WEIGHT
	60' UNIT					
*B23	80	80	#5	STR	16'-11"	1412
*S13	138	138	#5	2	7'-10"	1127
*EPOXY COATED REINFORCING STEEL				LBS.		2539
CLASS AA CONCRETE				CU.YDS.		16.2
TOTAL VERTICAL CONCRETE BARRIER RAIL				LN. FT.		120.26

DEAD LOAD DEFLECTION AND CAMBER

	3'-0" x 2'-0"
60' CORED SLAB UNIT	0.6" Ø L.R. STRAND
CAMBER (SLAB ALONE IN PLACE)	3 3/8" ↑
DEFLECTION DUE TO SUPERIMPOSED DEAD LOAD**	1/2" ↓
FINAL CAMBER	2 7/8" ↑

** INCLUDES FUTURE WEARING SURFACE

CORED SLABS REQUIRED

	NUMBER	LENGTH	TOTAL LENGTH
60' UNIT			
EXTERIOR C.S.	2	60'-0"	120'-0"
INTERIOR C.S.	7	60'-0"	420'-0"
TOTAL	9		540'-0"

CONCRETE RELEASE STRENGTH

UNIT	PSI
60' UNITS	4800

GUTTERLINE ASPHALT THICKNESS & RAIL HEIGHT

	ASPHALT OVERLAY THICKNESS @ MID-SPAN	RAIL HEIGHT @ MID-SPAN
60' UNITS	1 9/16"	3'-7 1/2"

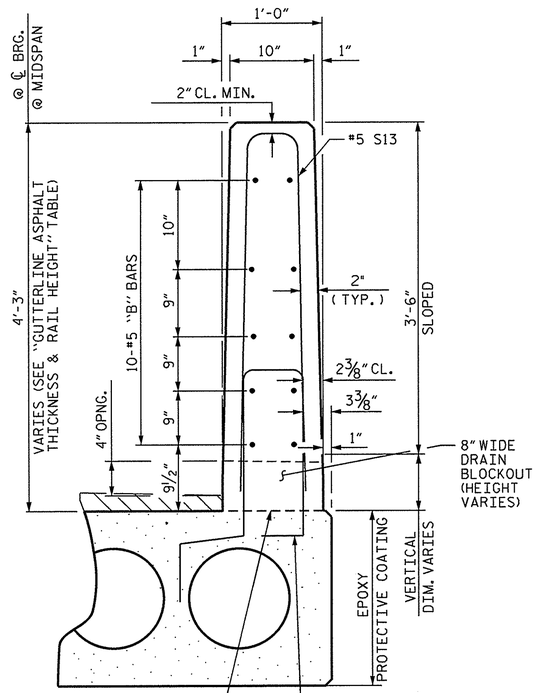

SECTION THRU RAIL

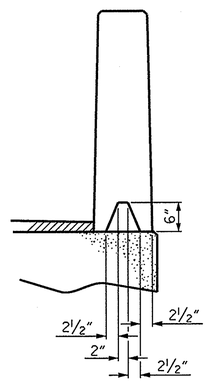

SECTION S-S
AT DAM IN OPEN JOINT
(THIS IS TO BE USED ONLY WHEN SLIP FORM IS USED)

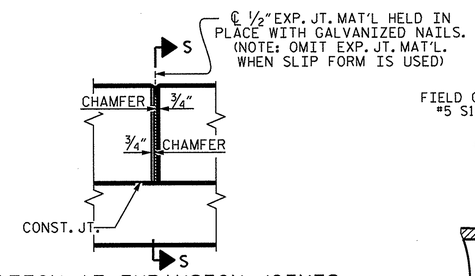

ELEVATION AT EXPANSION JOINTS

VERTICAL CONCRETE BARRIER RAIL DETAILS

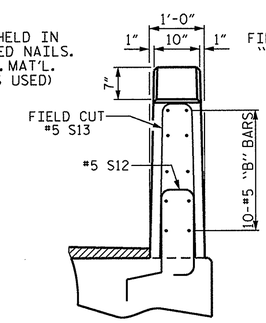

END VIEW

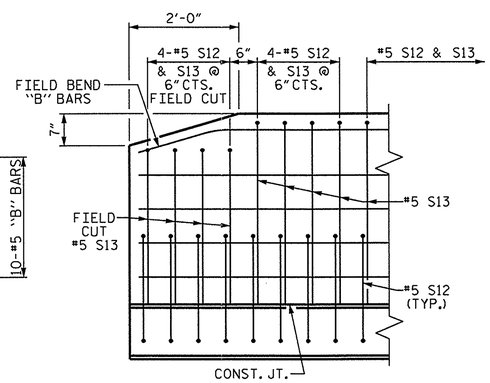

SIDE VIEW

END OF RAIL DETAILS

PROJECT NO. BD-5114Q
SWAIN COUNTY
STATION: 13+22.00 -L-

SHEET 5 OF 5

STATE OF NORTH CAROLINA
DEPARTMENT OF TRANSPORTATION
RALEIGH

3'-0" X 2'-0"
PRESTRESSED CONCRETE
CORED SLAB UNIT

NORTH CAROLINA PROFESSIONAL SEAL 15779 ENGINEER JOHN R. DUGGINS, JR.
2/18/13

ASSEMBLED BY : BMATHEW	DATE : 02/2012		
CHECKED BY : J. R. DUGGINS	DATE : 01/13		
DRAWN BY : MAA 6/10	REV. 12/11 MAA/AAC		
CHECKED BY : MKT 7/10			

REVISIONS								SHEET NO.
NO.	BY:	DATE:	NO.	BY:	DATE:			S-9
1			3					TOTAL SHEETS
2			4					26

18-FEB-2013 15:16
S:\DPG4\John\LIBR_Files\BD-51140\Final Plans\BD-51140_SD_S*.dgn
jduggins

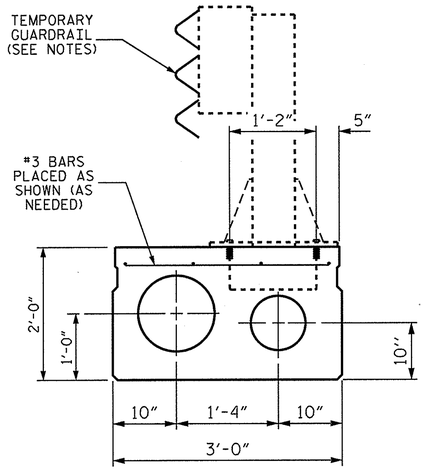

SECTION OF ANCHOR ASSEMBLY LOCATION

(TYPE III UNIT OF STAGE I)
THE #3 BARS ARE INCIDENTAL AND THEIR COST SHALL BE INCLUDED IN THE PRICE BID FOR THE PRESTRESSED CONCRETE CORED SLABS.

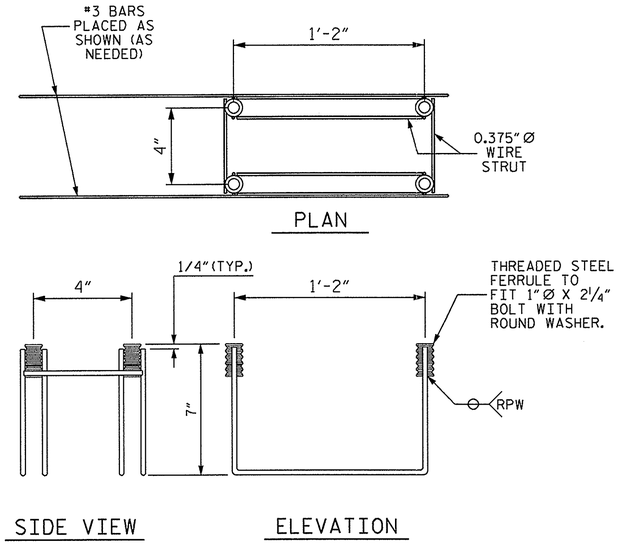

MINIMUM LENGTH OF THREADS IN INSERT (FERRULE): 2½"

TEMPORARY GUARDRAIL ANCHOR ASSEMBLY

(12 ASSEMBLIES REQUIRED IN THE TYPE III CORED SLAB UNITS)
(6 ASSEMBLIES REQUIRED IN THE APPROACH SLABS)

NOTES

THE TEMPORARY GUARDRAIL ANCHOR ASSEMBLY SHALL CONSIST OF THE FOLLOWING COMPONENTS:

A. A. FERRULES SHALL BE MADE FROM STEEL MEETING THE REQUIREMENTS OF AASHTO M169, GRADE 12L14 AND SHALL HAVE A MINIMUM LENGTH OF THREADS OF 2½".

B. 4 - 1" Ø X 2¼" BOLTS WITH WASHERS. BOLTS SHALL CONFORM TO THE REQUIREMENTS OF ASTM A307. BOLTS AND WASHERS SHALL BE GALVANIZED. (AT THE CONTRACTOR'S OPTION, STAINLESS STEEL BOLTS AND WASHERS MAY BE USED AS AN ALTERNATE FOR THE 1" Ø X 2¼" GALVANIZED BOLTS AND WASHERS. THEY SHALL CONFORM TO OR EXCEED THE MECHANICAL REQUIREMENTS OF ASTM A307. THE USE OF THIS ALTERNATE SHALL BE APPROVED BY THE ENGINEER.

C. WIRE STRUTS SHOWN IN THE TEMPORARY GUARDRAIL ANCHOR ASSEMBLY DETAIL ARE THE MINIMUM ALLOWABLE SIZE AND SHALL HAVE A MINIMUM TENSILE STRENGTH OF 100,000 PSI.

TEMPORARY GUARDRAIL ANCHOR ASSEMBLY WITH BOLTS SHALL BE ASSEMBLED IN THE SHOP. BOLT THREADS MAY BE RECUT AS NECESSARY TO INSURE FIT.

THE COST OF THE TEMORARY GUARDRAIL ANCHOR ASSEMBLY COMPLETE IN PLACE, SHALL BE INCLUDED, AS APPLICABLE, IN THE UNIT CONTRACT PRICE BID FOR 3'-0" X 2'-0" PRESTRESSED CONCRETE CORED SLAB OR LUMP SUMP PRICE BID FOR APPROACH SLABS.

FERRULES TO BE PLUGGED DURING CASTING OF THE CORED SLAB UNITS OR POURING OF APPROACH SLAB AS RECOMMENDED BY THE MANUFACTURER.

AT THE CONTRACTOR'S OPTION, FERRULES WITH OPEN OR CLOSED ENDS MAY BE USED.

PAYMENT FOR TEMPORARY GUARDRAIL IS INCLUDED IN ROADWAY PAY ITEMS.

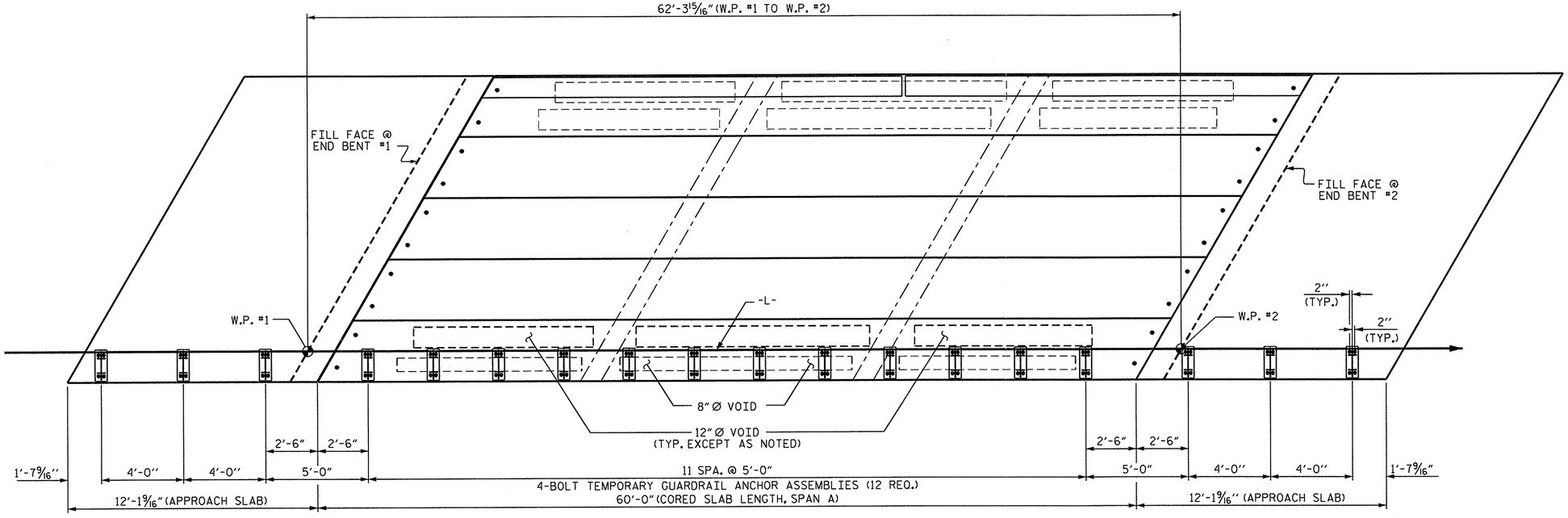

RAIL POST SPACING FOR TEMPORARY GUARDRAIL - STAGE I

PROJECT NO. BD-5114Q
SWAIN COUNTY
STATION: 13+22.00 -L-

STATE OF NORTH CAROLINA
DEPARTMENT OF TRANSPORTATION
RALEIGH

ANCHORAGE DETAILS FOR TEMPORARY GUARDRAIL ANCHOR ASSEMBLY FOR TYPE III CORED SLAB UNIT STAGE I

NORTH CAROLINA PROFESSIONAL SEAL 15779 ENGINEER JOHN R. DUGGINS, JR.
2/18/13

REVISIONS								SHEET NO.
NO.	BY:	DATE:	NO.	BY:	DATE:			S-10
1			3					TOTAL SHEETS
2			4					26

DRAWN BY : B. MATHEW DATE : 02/2012
CHECKED BY : J. R. DUGGINS DATE : 01/13

18-FEB-2013 15:14
S:\DOT4\John\LIBR_Files\BD-5114Q\FinalPlans\BD-5114Q_SD_GR.dgn
jduggins

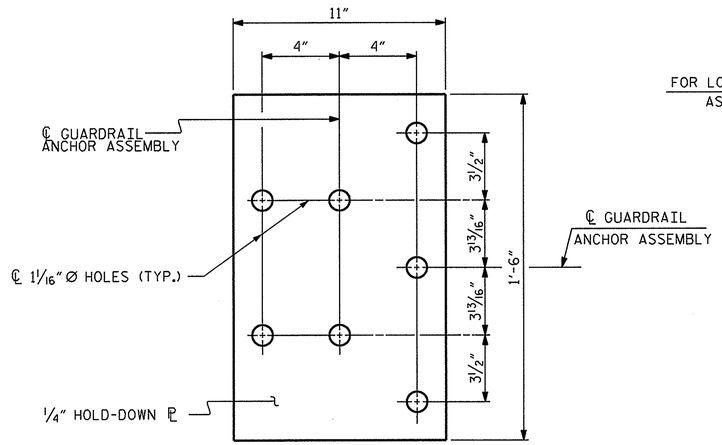

PLAN

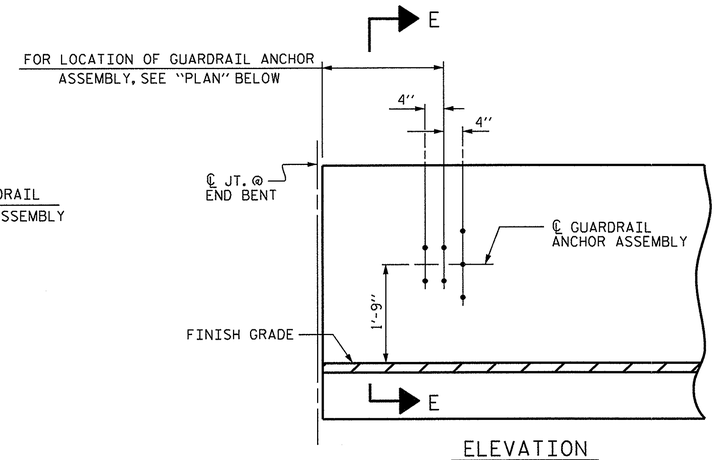

ELEVATION

NOTES

THE GUARDRAIL ANCHOR ASSEMBLY SHALL CONSIST OF A 1/4" HOLD DOWN PLATE AND 7 - 7/8" Ø BOLTS WITH NUTS AND WASHERS.

THE HOLD-DOWN PLATE SHALL CONFORM TO AASHTO M270 GRADE 36. AFTER FABRICATION, THE HOLD-DOWN PLATE SHALL BE HOT-DIP GALVANIZED IN ACCORDANCE WITH AASHTO M111.

BOLTS SHALL CONFORM TO THE REQUIREMENTS OF ASTM A307 AND NUTS SHALL CONFORM TO THE REQUIREMENTS OF AASHTO M291. BOLTS, NUTS AND WASHERS SHALL BE GALVANIZED. (AT THE CONTRACTOR'S OPTION, STAINLESS STEEL BOLTS, NUTS AND WASHERS MAY BE USED AS AN ALTERNATE FOR THE 7/8" Ø GALVANIZED BOLTS, NUTS AND WASHERS. THEY SHALL CONFORM TO OR EXCEED THE MECHANICAL REQUIREMENTS OF ASTM A307. THE USE OF THIS ALTERNATE SHALL BE APPROVED BY THE ENGINEER.)

THE GUARDRAIL ANCHOR ASSEMBLY IS REQUIRED AT ALL POINTS WHERE APPROACH GUARDRAIL IS TO BE ATTACHED TO THE END OF BARRIER RAIL. FOR POINTS OF ATTACHMENT, SEE SKETCH.

AFTER INSTALLATION, THE EXPOSED THREAD OF THE BOLT SHALL BE BURRED WITH A SHARP POINTED TOOL.

THE COST OF THE GUARDRAIL ANCHOR ASSEMBLY SHALL BE INCLUDED IN THE UNIT CONTRACT PRICE BID FOR VERTICAL CONCRETE BARRIER RAIL.

THE VERTICAL REINFORCING BARS MAY BE SHIFTED SLIGHTLY IN THE VERTICAL CONCRETE BARRIER RAIL TO CLEAR ASSEMBLY BOLTS.

THE 1 1/4" Ø HOLES SHALL BE FORMED OR DRILLED WITH A CORE BIT. IMPACT TOOLS WILL NOT BE PERMITTED. ANY CONCRETE DAMAGED BY THIS WORK SHALL BE REPAIRED TO THE SATISFACTION OF THE ENGINEER.

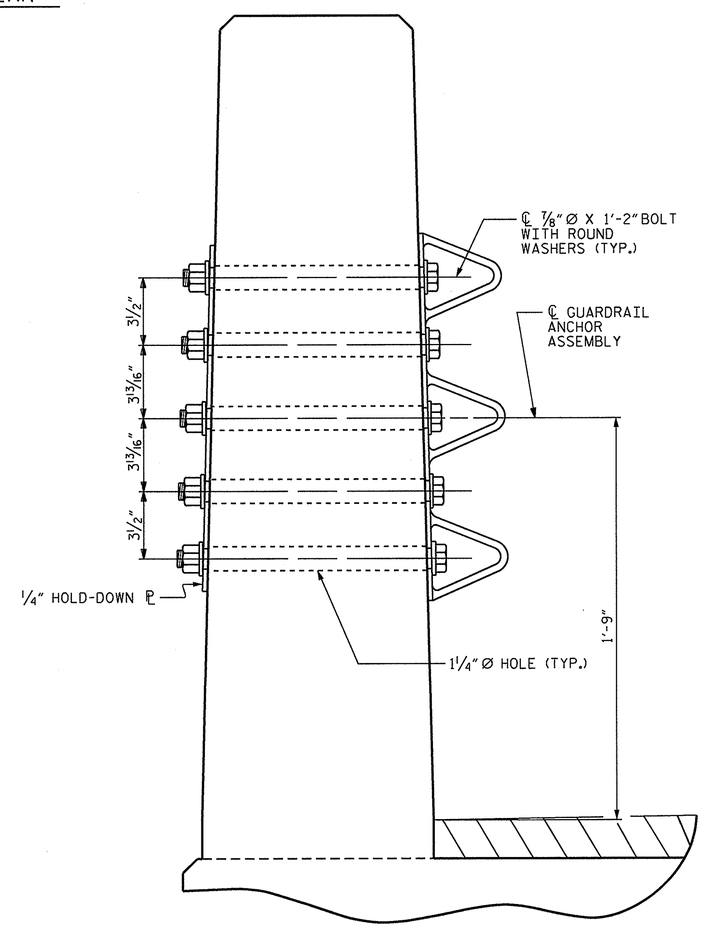

SECTION E-E

GUARDRAIL ANCHOR ASSEMBLY DETAILS

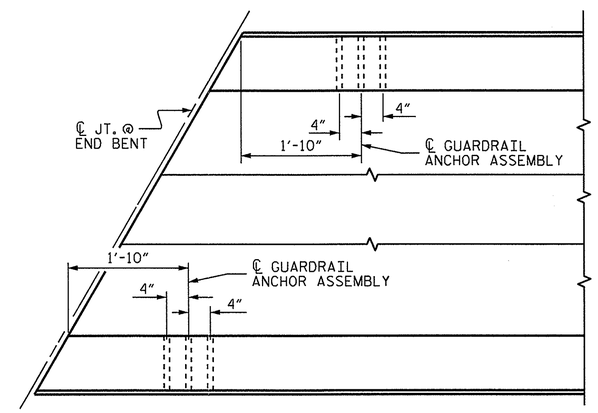

PLAN

LOCATION OF ANCHORS FOR GUARDRAIL

END BENT #1 SHOWN, END BENT #2 SIMILAR.

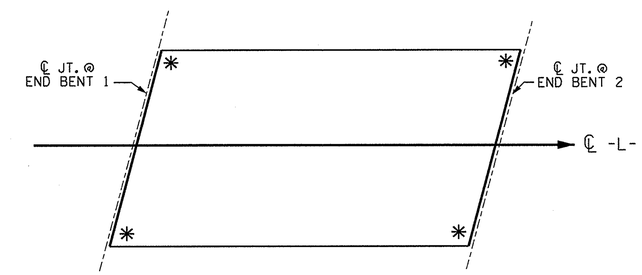

SKETCH SHOWING POINTS OF ATTACHMENTS

✳ DENOTES GUARDRAIL ANCHOR ASSEMBLY

PROJECT NO. BD-5114Q

SWAIN COUNTY

STATION: 13+22.00 -L-

STATE OF NORTH CAROLINA
DEPARTMENT OF TRANSPORTATION
RALEIGH

GUARDRAIL ANCHORAGE FOR VERTICAL CONCRETE BARRIER RAIL

NORTH CAROLINA PROFESSIONAL SEAL 15779 ENGINEER JOHN R. DUGGINS, JR.
2/18/13

REVISIONS								SHEET NO.
NO.	BY:	DATE:	NO.	BY:	DATE:			S-11
1			3					TOTAL SHEETS
2			4					26

STD. NO. GRA3

ASSEMBLED BY : B. MATHEW		DATE : 02/12	
CHECKED BY : J. R. DUGGINS		DATE : 01/13	
DRAWN BY : MAA 5/10	ADDED 5/6/10		
CHECKED BY : GM 5/10	REV. 10/1/11	MAA/GM	
	REV. 12/5/11	MAA/GM	

18-FEB-2013 15:14
S:\DPG4\John\LIBR_Files\BD-51140\Final Plans\BD-51140_SD_GR.dgn
jduggins

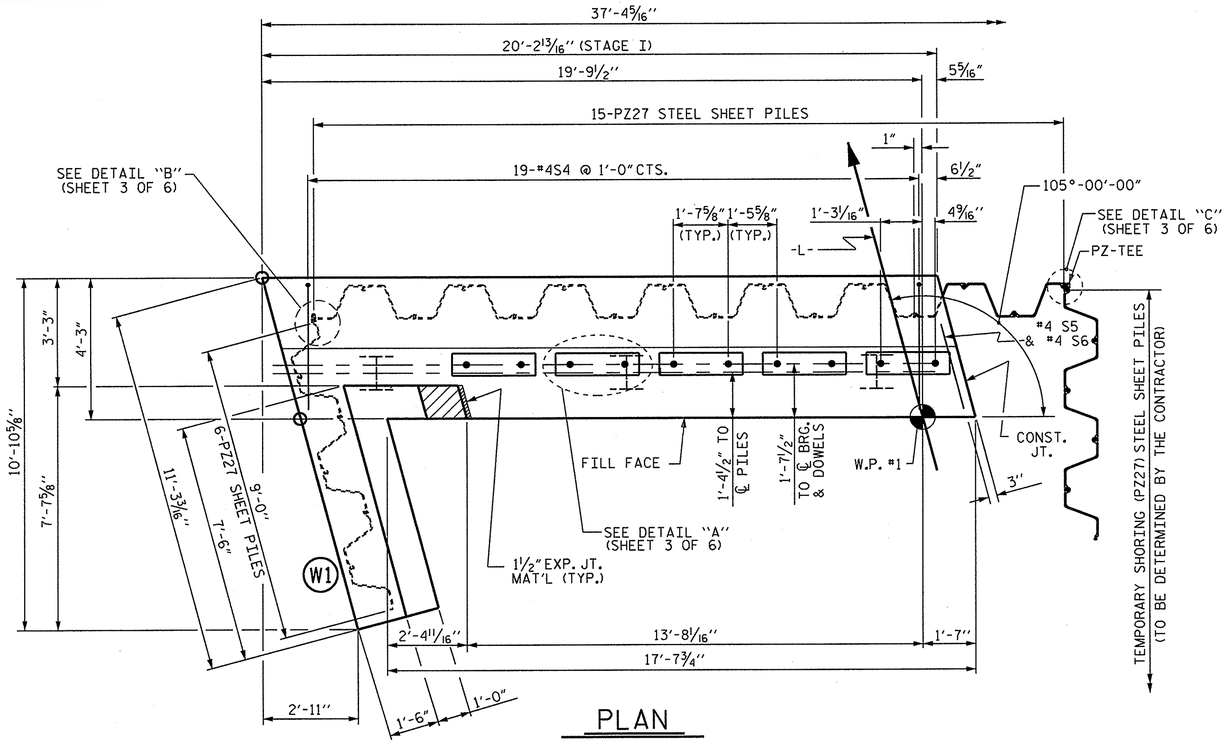

PLAN

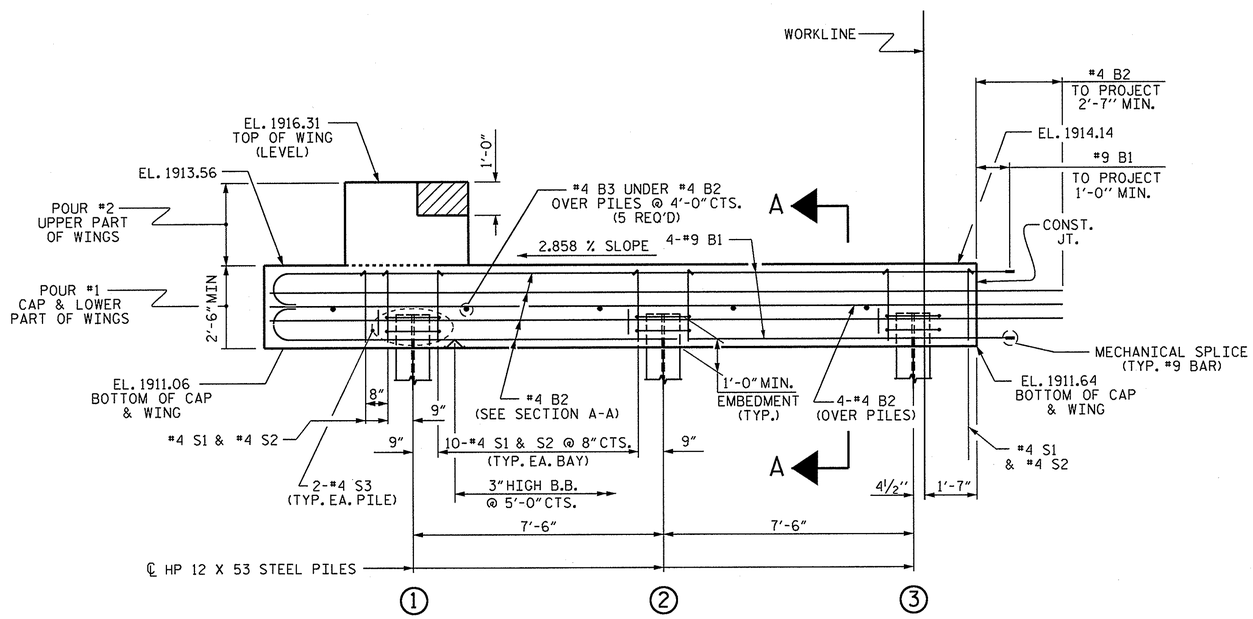

ELEVATION

WINGS NOT SHOWN FOR CLARITY.
SHEET PILES ARE NOT SHOWN FOR CLARITY.
ELEVATIONS SHOWN AT ℄ CAP.

NOTES

STIRRUPS IN CAP MAY BE SHIFTED AS NECESSARY TO CLEAR DOWELS.

THE CONCRETE IN THE SHADED AREA OF THE WING SHALL BE POURED AFTER THE VERTICAL CONCRETE BARRIER RAIL IS CAST IF SLIP FORMING IS USED.

FOR PILE SPLICE DETAILS, SEE SHEET 3 OF 6.

FOR WING DETAILS, SEE SHEET 3 OF 6.

TOP OF PILE ELEVATIONS	
1	1912.19
2	1912.41
3	1912.62

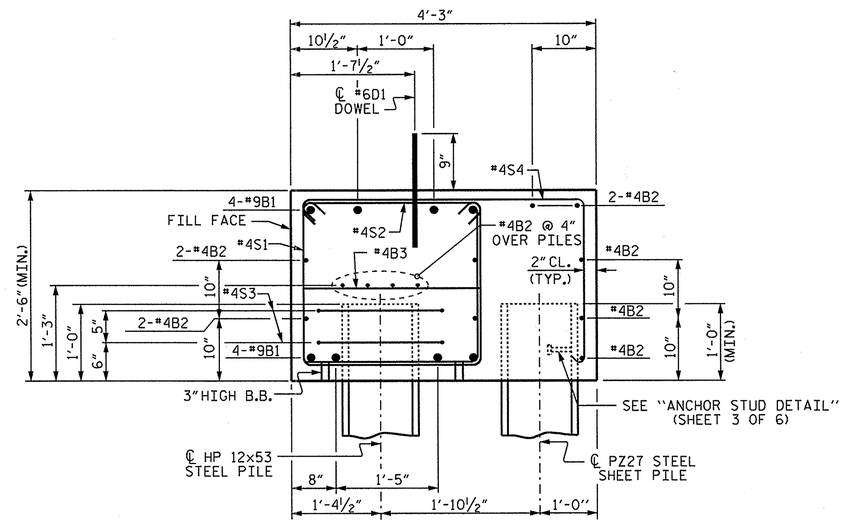

SECTION A-A

PROJECT NO. BD-5114Q
SWAIN COUNTY
STATION: 13+22.00 -L-

SHEET 1 OF 6

STATE OF NORTH CAROLINA
DEPARTMENT OF TRANSPORTATION
RALEIGH

SUBSTRUCTURE

END BENT #1
STAGE I

NORTH CAROLINA PROFESSIONAL SEAL 15779 ENGINEER JOHN R. DUGGINS, JR.
2/18/13

REVISIONS								SHEET NO.
NO.	BY:	DATE:	NO.	BY:	DATE:			S-12
1			3					TOTAL SHEETS
2			4					26

ASSEMBLED BY : V.X. NGUYEN	DATE : 10-22-12	
CHECKED BY : J. R. DUGGINS	DATE : 01/13	
DRAWN BY : DGE 03/10		
CHECKED BY : MKT 03/10		

18-FEB-2013 15:13
S:\DPG4\John\LIBR_Files\BD-5114Q\Final Plans\BD-5114Q_SD_E*.dgn
jduggins

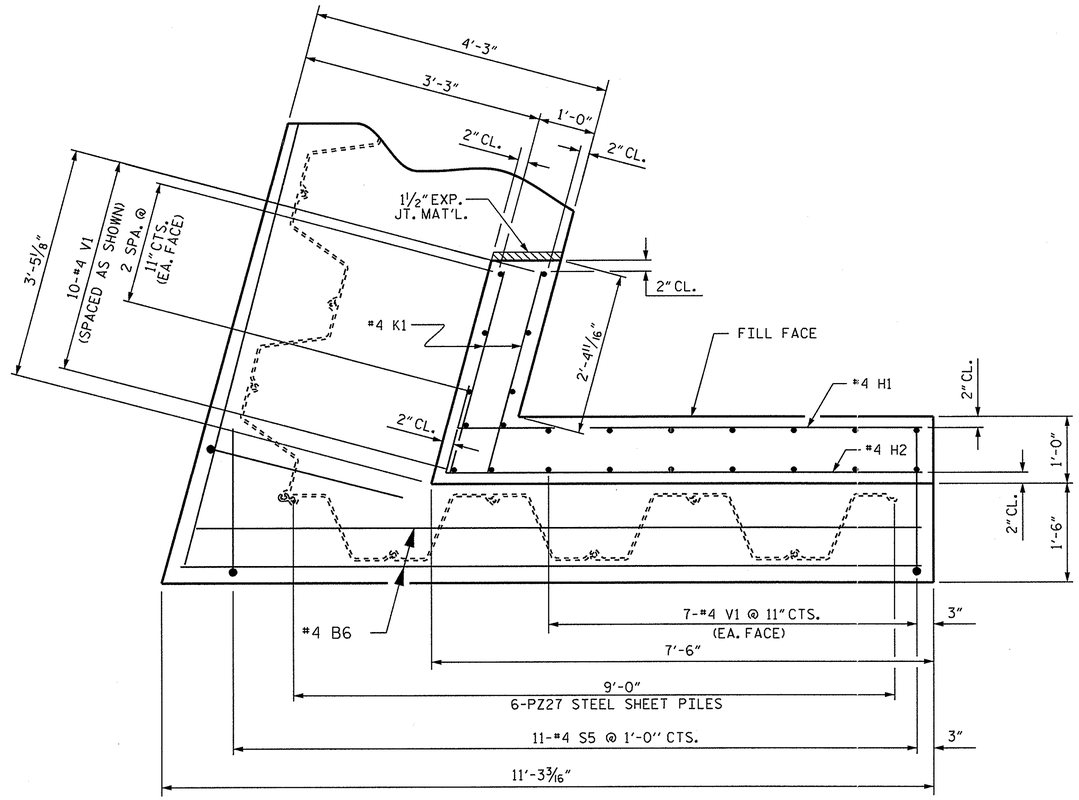

PLAN OF WING (W1)

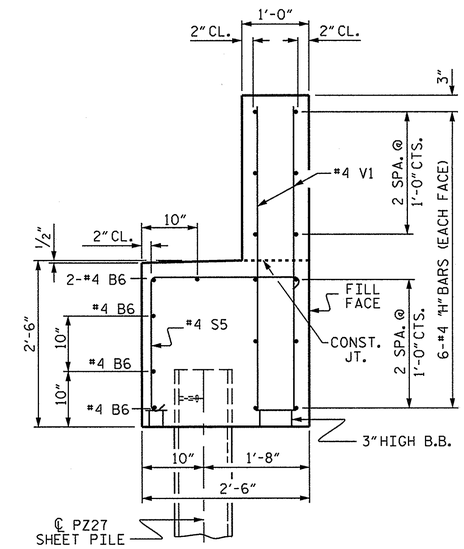

SECTION X-X

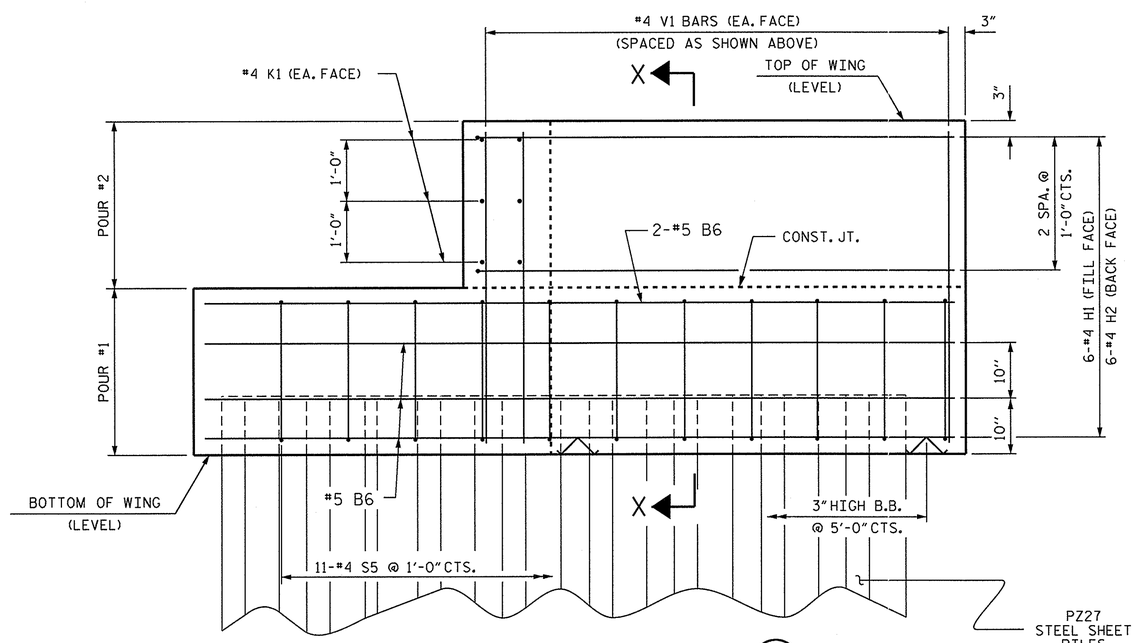

ELEVATION OF WING (W1)

PROJECT NO. BD-5114Q

SWAIN COUNTY

STATION: 13+22.00 -L-

SHEET 2 OF 6

STATE OF NORTH CAROLINA
DEPARTMENT OF TRANSPORTATION
RALEIGH

SUBSTRUCTURE
END BENT #1
WING DETAILS
STAGE I

NORTH CAROLINA PROFESSIONAL SEAL 15779 ENGINEER JOHN R. DUGGINS, JR.
2/18/13

REVISIONS						
NO.	BY:	DATE:	NO.	BY:	DATE:	
1			3			
2			4			

SHEET NO. S-13
TOTAL SHEETS 26

ASSEMBLED BY : V.X. NGUYEN DATE : 10-23-12
CHECKED BY : J. R. DUGGINS DATE : 01/13

DRAWN BY : DGE 03/10
CHECKED BY : MKT 03/10

18-FEB-2013 15:13
S:\OPG4\John\LIBR_Files\BD-5114Q\Final Plans\BD-5114Q_SD_E*.dgn
jduggins

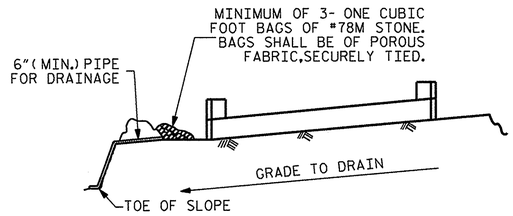

BAGGED STONE AND PIPE SHALL BE PLACED IMMEDIATELY AFTER COMPLETION OF END BENT EXCAVATION. PIPE MAY BE EITHER CONCRETE, CORRUGATED STEEL, CORRUGATED ALUMINUM ALLOY, OR CORRUGATED PLASTIC. PERFORATED PIPE WILL NOT BE ALLOWED.

BAGGED STONE SHALL REMAIN IN PLACE UNTIL THE ENGINEER DIRECTS THAT IT BE REMOVED. THE CONTRACTOR SHALL REMOVE AND DISPOSE OF SILT ACCUMULATIONS AT BAGGED STONE WHEN SO DIRECTED BY THE ENGINEER. BAGS SHALL BE REMOVED AND REPLACED WHENEVER THE ENGINEER DETERMINES THAT THEY HAVE DETERIORATED AND LOST THEIR EFFECTIVENESS.

NO SEPARATE PAYMENT WILL BE MADE FOR THIS WORK AND THE ENTIRE COST OF THIS WORK SHALL BE INCLUDED IN THE UNIT CONTRACT PRICE BID FOR THE SEVERAL PAY ITEMS.

TEMPORARY DRAINAGE AT END BENT

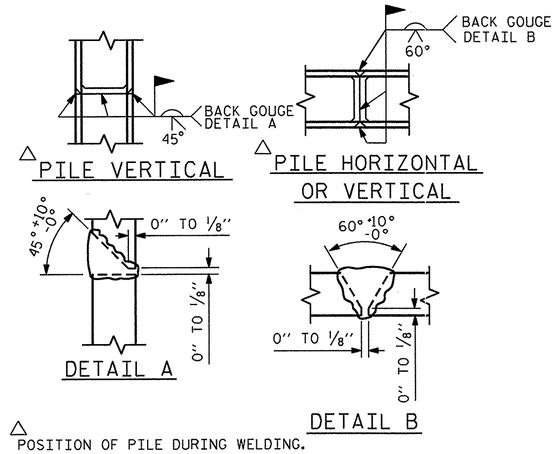

△ POSITION OF PILE DURING WELDING.

PILE SPLICE DETAILS

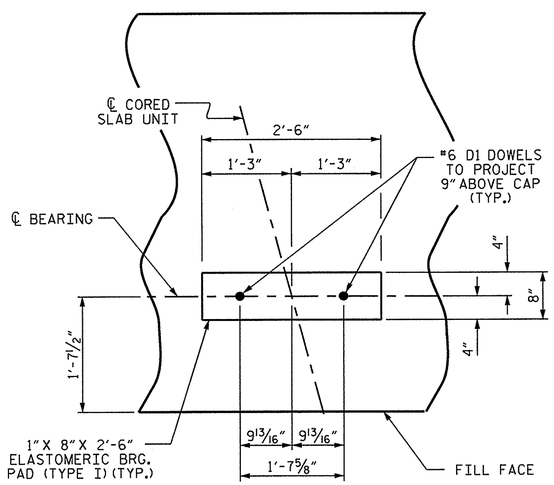

DETAIL "A"

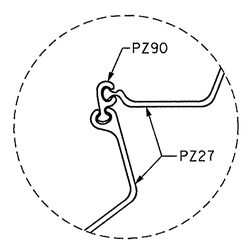

DETAIL "B"

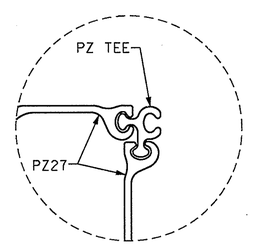

DETAIL "C"

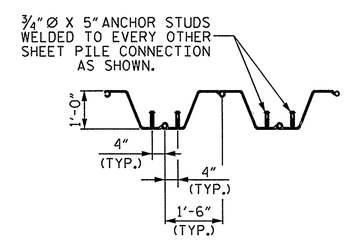

ANCHOR STUD DETAIL

BAR TYPES

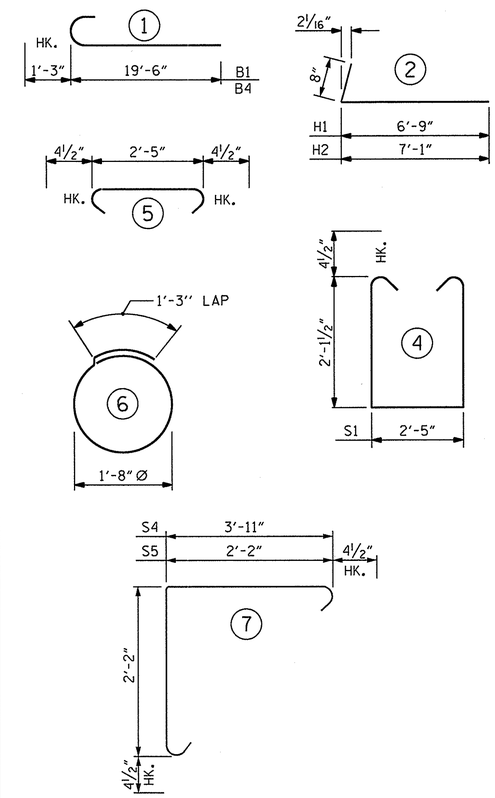

ALL BAR DIMENSIONS ARE OUT TO OUT.

BILL OF MATERIAL

END BENT #1 - STAGE I

BAR	NO.	SIZE	TYPE	LENGTH	WEIGHT
B1	8	#9	1	20'-9"	564
B2	13	#4	STR	21'-3"	185
B3	5	#4	STR	2'-5"	8
B6	5	#4	STR	10'-8"	36
D1	10	#6	STR	1'-6"	23
H1	6	#4	2	7'-5"	30
H2	6	#4	2	7'-9"	31
K1	6	#4	STR	3'-1"	12
S1	23	#4	4	7'-5"	114
S2	23	#4	5	3'-2"	49
S3	6	#4	6	6'-6"	26
S4	19	#4	7	6'-10"	87
S5	11	#4	7	5'-1"	37
V1	24	#4	STR	4'-11"	79

REINFORCING STEEL 1281 LBS.

CLASS A CONCRETE BREAKDOWN

POUR #1 CAP, LOWER PART OF WINGS & COLLARS 9.5 C.Y.

POUR #2 UPPER PART OF WINGS 1.0 C.Y.

TOTAL CLASS A CONCRETE 10.5 C.Y.

END BENT #1 - (STAGE I)
HP 12 X 53 STEEL PILES
NO: 3 LIN. FT.= 90

18" STEEL SHEET PILES (STAGE I)

NO. PZ27 = 21
NO. PZ90 = 1
NO. PZ-TEE = 1
TOTAL = 23 550 SQ. FT.

PILES EXCAVATION (STAGE I)

IN SOIL 75 LIN. FT.
NOT IN SOIL 15 LIN. FT.

TEMPORARY SHORING

TOTAL = 270 SQ. FT.

PROJECT NO. BD-5114Q
SWAIN COUNTY
STATION: 13+22.000 -L-

SHEET 3 OF 6

STATE OF NORTH CAROLINA
DEPARTMENT OF TRANSPORTATION
RALEIGH

SUBSTRUCTURE
END BENT #1
DETAILS
STAGE I

NORTH CAROLINA PROFESSIONAL SEAL 15779 ENGINEER JOHN R. DUGGINS, JR.
2/18/13

REVISIONS							SHEET NO.
NO.	BY:	DATE:	NO.	BY:	DATE:		S-14
1			3				TOTAL SHEETS
2			4				26

ASSEMBLED BY :	V.X. NGUYEN	DATE :	10-22-12
CHECKED BY :	J. R. DUGGINS	DATE :	01/13
DRAWN BY :	DGE	03/10	
CHECKED BY :	MKT	03/10	

18-FEB-2013 15:13
S:\DPG4\John\LIBR_Files\BD-5114Q\Final Plans\BD-5114Q_SD_E*.dgn
jduggins

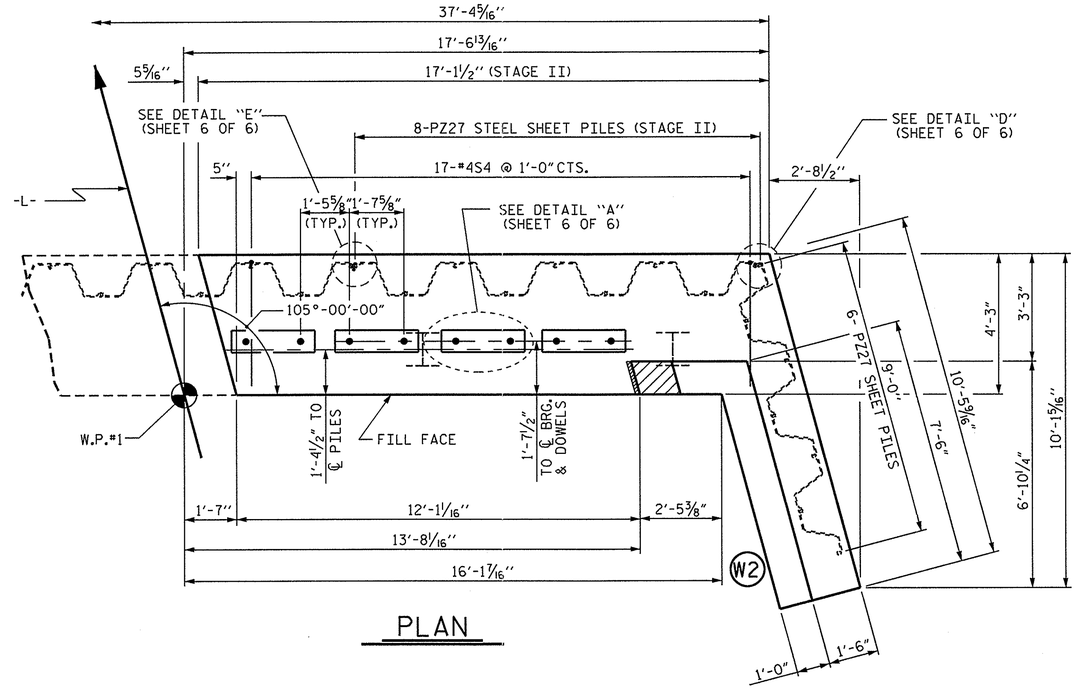

PLAN

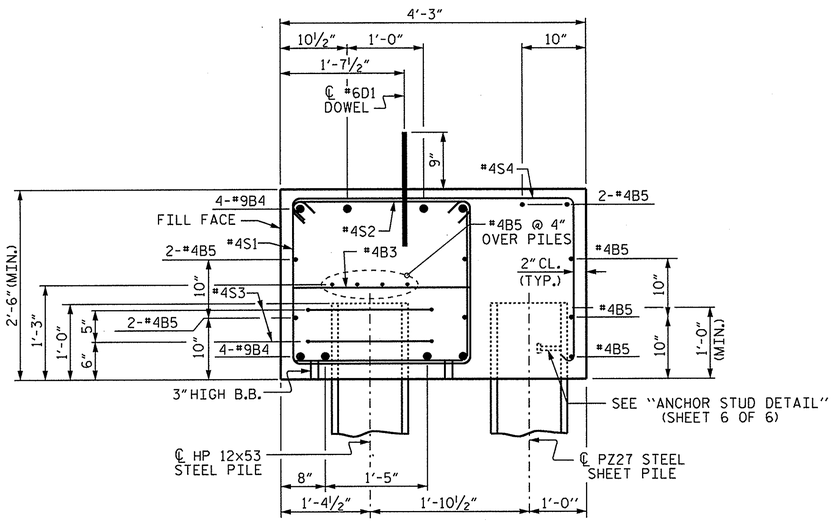

SECTION B-B

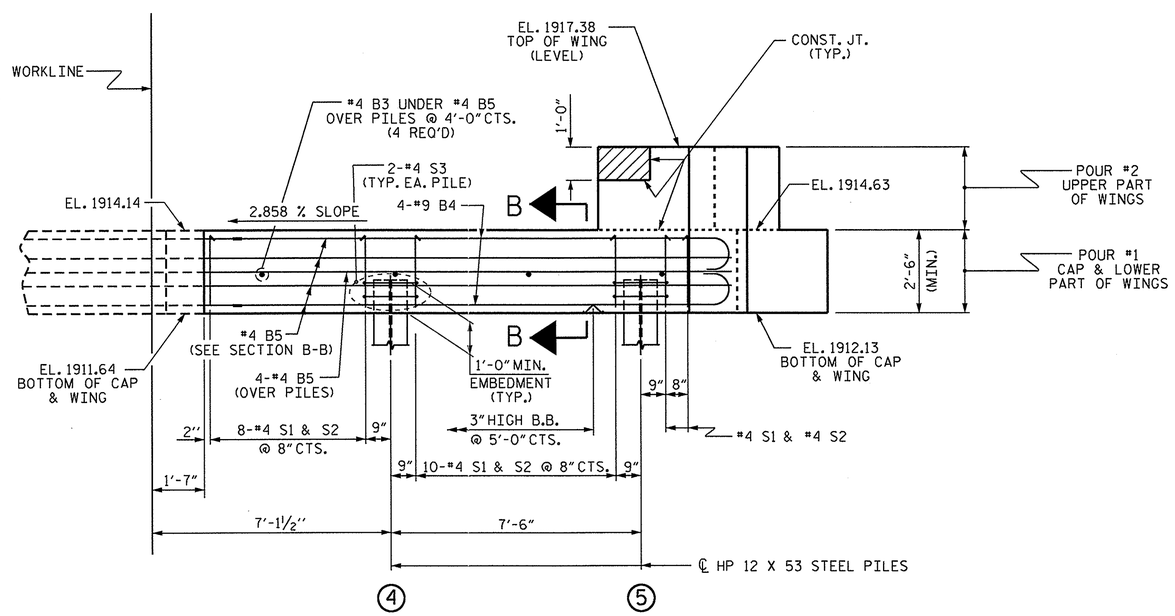

ELEVATION

WINGS NOT SHOWN FOR CLARITY.
SHEET PILES NOT SHOWN FOR CLARITY.
ELEVATIONS SHOWN AT ℄ CAP.

NOTES

STIRRUPS IN CAP MAY BE SHIFTED AS NECESSARY TO CLEAR DOWELS.

THE CONCRETE IN THE SHADED AREA OF THE WING SHALL BE POURED AFTER THE VERTICAL CONCRETE BARRIER RAIL IS CAST IF SLIP FORMING IS USED.

FOR PILE SPLICE DETAILS, SEE SHEET 6 OF 6.

FOR WING DETAILS, SEE SHEET 5 OF 6.

TOP OF PILE ELEVATIONS	
4	1912.83
5	1913.05

PROJECT NO. BD-5114Q
SWAIN COUNTY
STATION: 13+22.00 -L-

SHEET 4 OF 6

STATE OF NORTH CAROLINA
DEPARTMENT OF TRANSPORTATION
RALEIGH

SUBSTRUCTURE

END BENT #1
STAGE II

NORTH CAROLINA PROFESSIONAL SEAL 15779 ENGINEER JOHN R. DUGGINS, JR.
2/18/13

REVISIONS							SHEET NO.
NO.	BY:	DATE:	NO.	BY:	DATE:		S-15
1			3				TOTAL SHEETS
2			4				26

ASSEMBLED BY : V.X. NGUYEN		DATE : 10-22-12	
CHECKED BY : J. R. DUGGINS		DATE : 01/13	
DRAWN BY : DGE 03/10			
CHECKED BY : MKT 03/10			

18-FEB-2013 15:12
S:\DPG4\John\LIBR_Files\BD-51140\Final Plans\BD-51140_SD_E*.dgn
jduggins

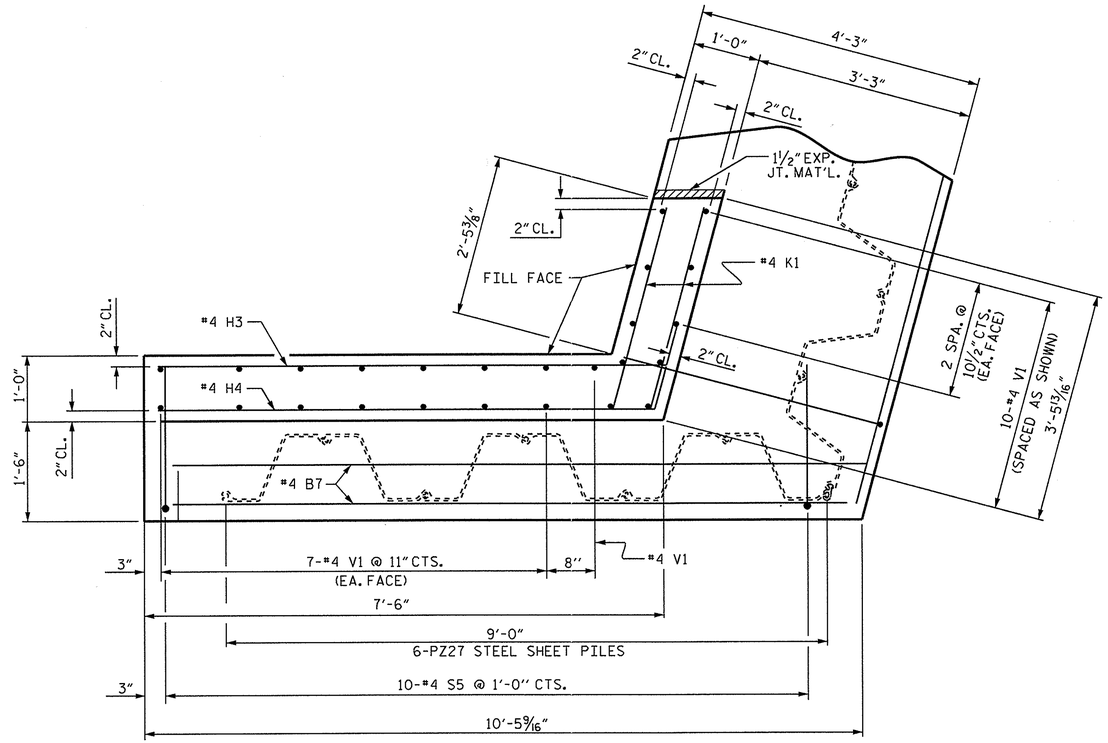

PLAN OF WING (W2)

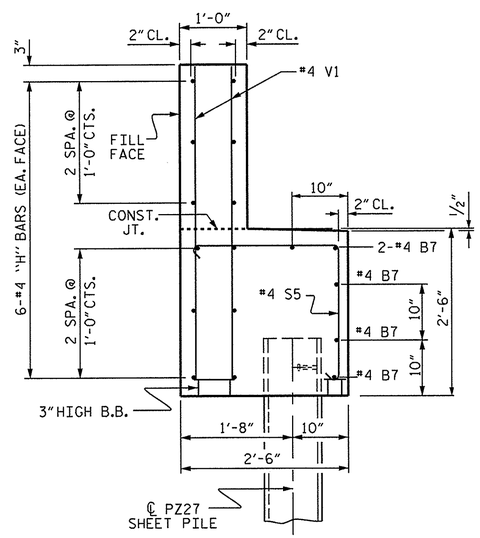

SECTION Y-Y

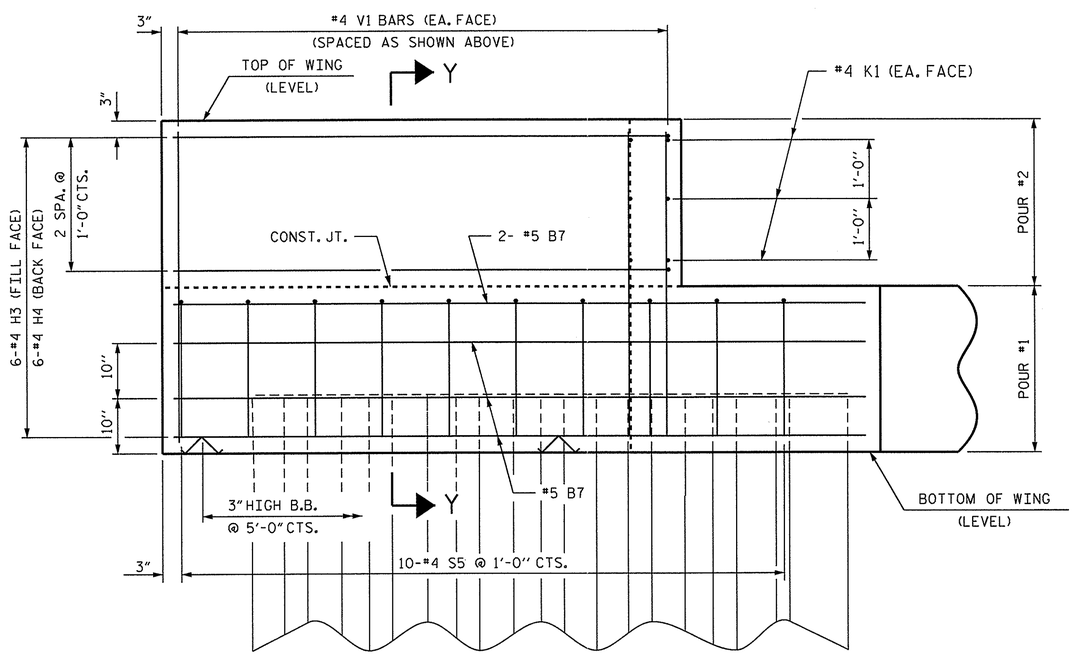

ELEVATION OF WING (W2)

PROJECT NO. BD-5114Q

SWAIN COUNTY

STATION: 13+22.00 -L-

SHEET 5 OF 6

STATE OF NORTH CAROLINA
DEPARTMENT OF TRANSPORTATION
RALEIGH

SUBSTRUCTURE
END BENT #1
WING DETAILS
STAGE II

NORTH CAROLINA PROFESSIONAL SEAL 15779 ENGINEER JOHN R. DUGGINS, JR.
2/18/13

REVISIONS						SHEET NO.
NO.	BY:	DATE:	NO.	BY:	DATE:	S-16
1			3			TOTAL SHEETS
2			4			26

ASSEMBLED BY : V.X. NGUYEN DATE : 10-23-12
CHECKED BY : J. R. DUGGINS DATE : 01/13

DRAWN BY : DGE 03/10
CHECKED BY : MKT 03/10

18-FEB-2013 15:12
S:\DPG4\John\LIBR_Files\BD-5114Q\Final Plans\BD-5114Q_SD_E*.dgn
jduggins

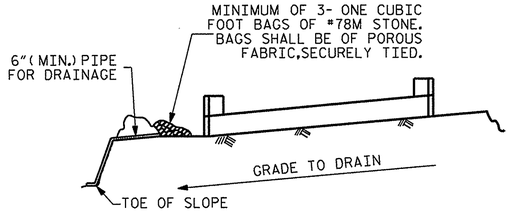

BAGGED STONE AND PIPE SHALL BE PLACED IMMEDIATELY AFTER COMPLETION OF END BENT EXCAVATION. PIPE MAY BE EITHER CONCRETE, CORRUGATED STEEL, CORRUGATED ALUMINUM ALLOY, OR CORRUGATED PLASTIC. PERFORATED PIPE WILL NOT BE ALLOWED.

BAGGED STONE SHALL REMAIN IN PLACE UNTIL THE ENGINEER DIRECTS THAT IT BE REMOVED. THE CONTRACTOR SHALL REMOVE AND DISPOSE OF SILT ACCUMULATIONS AT BAGGED STONE WHEN SO DIRECTED BY THE ENGINEER. BAGS SHALL BE REMOVED AND REPLACED WHENEVER THE ENGINEER DETERMINES THAT THEY HAVE DETERIORATED AND LOST THEIR EFFECTIVENESS.

NO SEPARATE PAYMENT WILL BE MADE FOR THIS WORK AND THE ENTIRE COST OF THIS WORK SHALL BE INCLUDED IN THE UNIT CONTRACT PRICE BID FOR THE SEVERAL PAY ITEMS.

TEMPORARY DRAINAGE AT END BENT

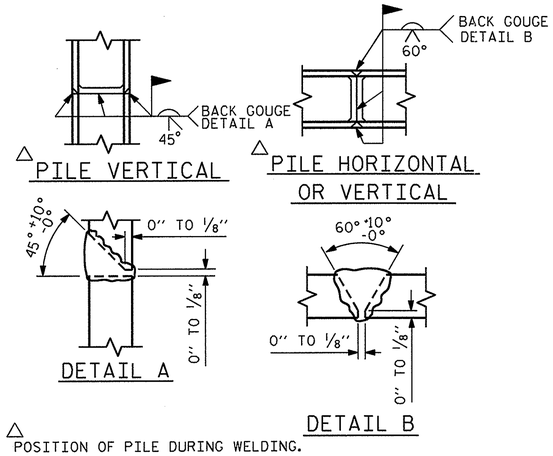

△ POSITION OF PILE DURING WELDING.

PILE SPLICE DETAILS

BAR TYPES

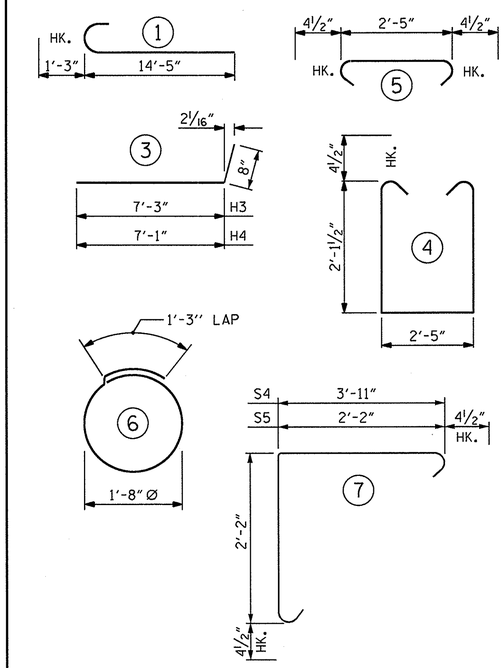

ALL BAR DIMENSIONS ARE OUT TO OUT.

BILL OF MATERIAL

END BENT #1 - STAGE II

BAR	NO.	SIZE	TYPE	LENGTH	WEIGHT
B4	8	#9	1	15'-8"	426
B5	13	#4	STR	15'-5"	134
B3	4	#4	STR	2'-5"	6
B7	5	#4	STR	10'-2"	34
D1	8	#6	STR	1'-6"	18
H3	6	#4	3	7'-11"	32
H4	6	#4	3	7'-9"	31
K1	6	#4	STR	3'-1"	12
S1	20	#4	4	7'-5"	99
S2	20	#4	5	3'-2"	42
S3	4	#4	6	6'-6"	17
S4	17	#4	7	6'-10"	78
S5	10	#4	7	5'-1"	34
V1	25	#4	STR	4'-11"	82

REINFORCING STEEL 1045 LBS.

CLASS A CONCRETE BREAKDOWN

POUR #1	CAP, LOWER PART OF WINGS & COLLARS	8.2 C.Y.
POUR #2	UPPER PART OF WINGS	1.0 C.Y.
TOTAL CLASS A CONCRETE		9.2 C.Y.

END BENT #1 - (STAGE II)
HP 12 X 53 STEEL PILES
NO: 2 LIN. FT.= 60

18" STEEL SHEET PILES (STAGE II)

NO. PZ27 = 14
NO. PZ90 = 1
TOTAL = 15 368 SQ. FT.

PILES EXCAVATION (STAGE II)

IN SOIL 50 LIN. FT.
NOT IN SOIL 10 LIN. FT.

TOTAL BILL OF MATERIAL

	CLASS A CONCRETE	REINFORCING STEEL	HP 12 X 53 STEEL PILES		PILE EXCAVATION LIN. FT.		18" STEEL SHEET PILES	TEMPORARY SHORING
	CU. YDS.	LBS.	No.	LIN. FT.	IN SOIL	NOT IN SOIL	SQ. FT.	SQ. FT.
STAGE I	10.5	1281	3	90	75	15	550	270
STAGE II	9.2	1045	2	60	50	10	368	-
E. BT.#1 TOTAL	19.7	2326	5	150	125	25	918	270

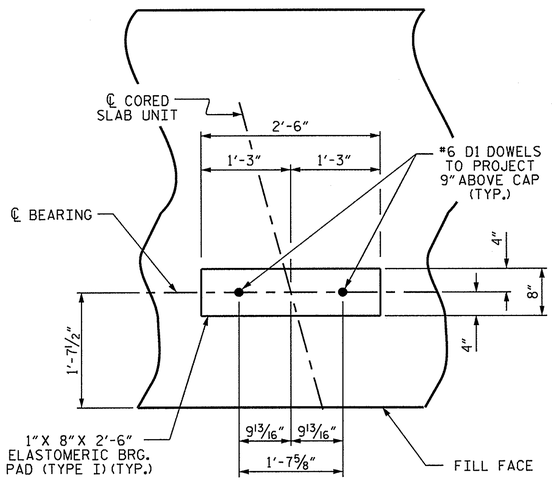

DETAIL "A"

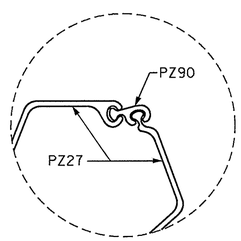

DETAIL "D"

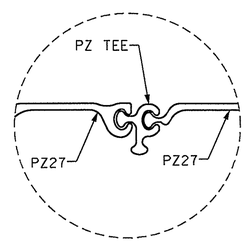

DETAIL "E"

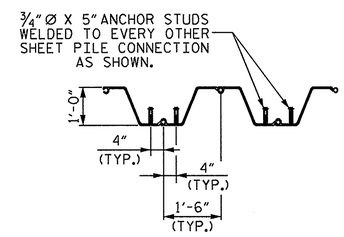

ANCHOR STUD DETAIL

PROJECT NO. BD-5114Q
SWAIN COUNTY
STATION: 13+22.00 -L-

SHEET 6 OF 6

STATE OF NORTH CAROLINA
DEPARTMENT OF TRANSPORTATION
RALEIGH

SUBSTRUCTURE
END BENT #1
DETAILS
STAGE II

NORTH CAROLINA PROFESSIONAL SEAL 15779 ENGINEER JOHN R. DUGGINS, JR.
2/18/13

REVISIONS						SHEET NO.
NO.	BY:	DATE:	NO.	BY:	DATE:	S-17
1			3			TOTAL SHEETS
2			4			26

ASSEMBLED BY : V.X. NGUYEN DATE : 10-22-12
CHECKED BY : J. R. DUGGINS DATE : 01/13
DRAWN BY : DGE 03/10
CHECKED BY : MKT 03/10

18-FEB-2013 15:11
S:\DPG4\John\LIBR_Files\BD-51140\Final Plans\BD-51140_SD_E*.dgn
jduggins

NOTES

STIRRUPS IN CAP MAY BE SHIFTED AS NECESSARY TO CLEAR DOWELS.

THE CONCRETE IN THE SHADED AREA OF THE WING SHALL BE POURED AFTER THE VERTICAL CONCRETE BARRIER RAIL IS CAST IF SLIP FORMING IS USED.

FOR PILE SPLICE DETAILS, SEE SHEET 3 OF 6.

FOR WING DETAILS, SEE SHEET 2 OF 6.

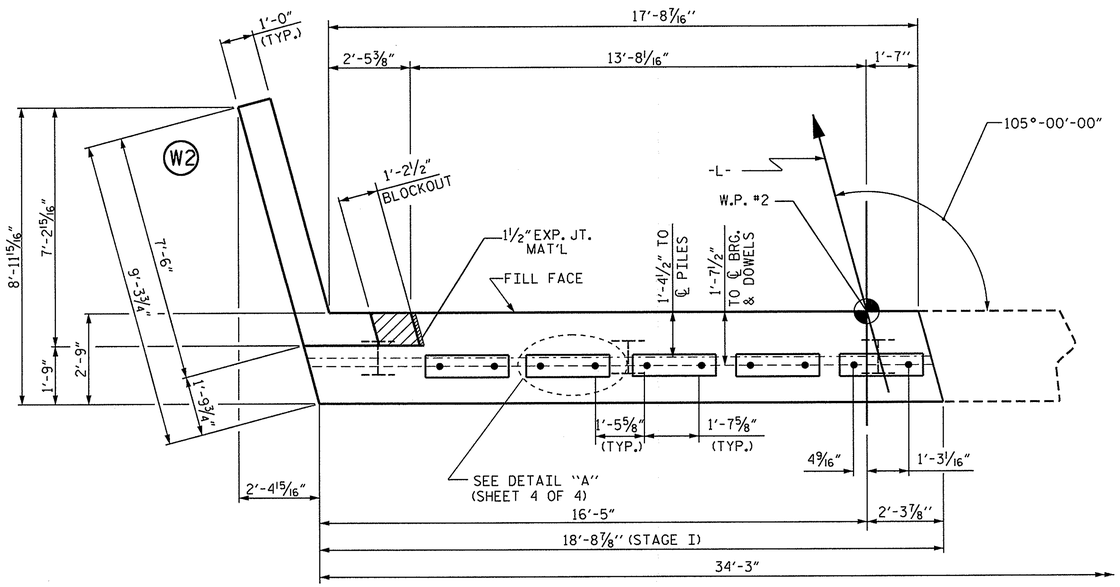

PLAN

TOP OF PILE ELEVATIONS	
1	1910.10
2	1910.31
3	1910.53

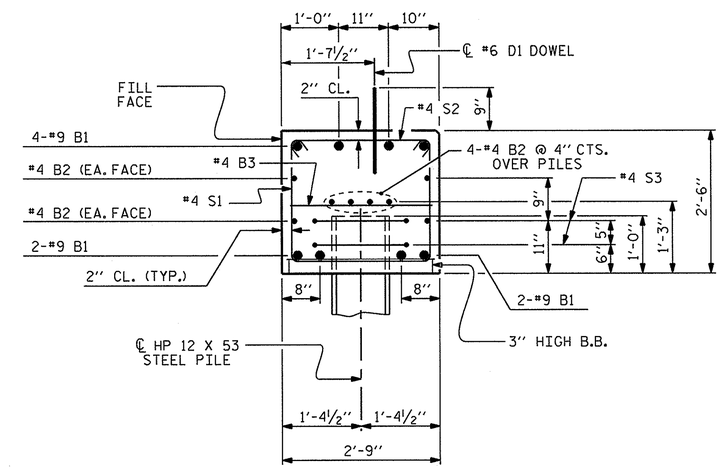

SECTION A-A

(CONCRETE COLLAR NOT SHOWN FOR CLARITY. SEE "CORROSION PROTECTION FOR STEEL PILES DETAIL.")

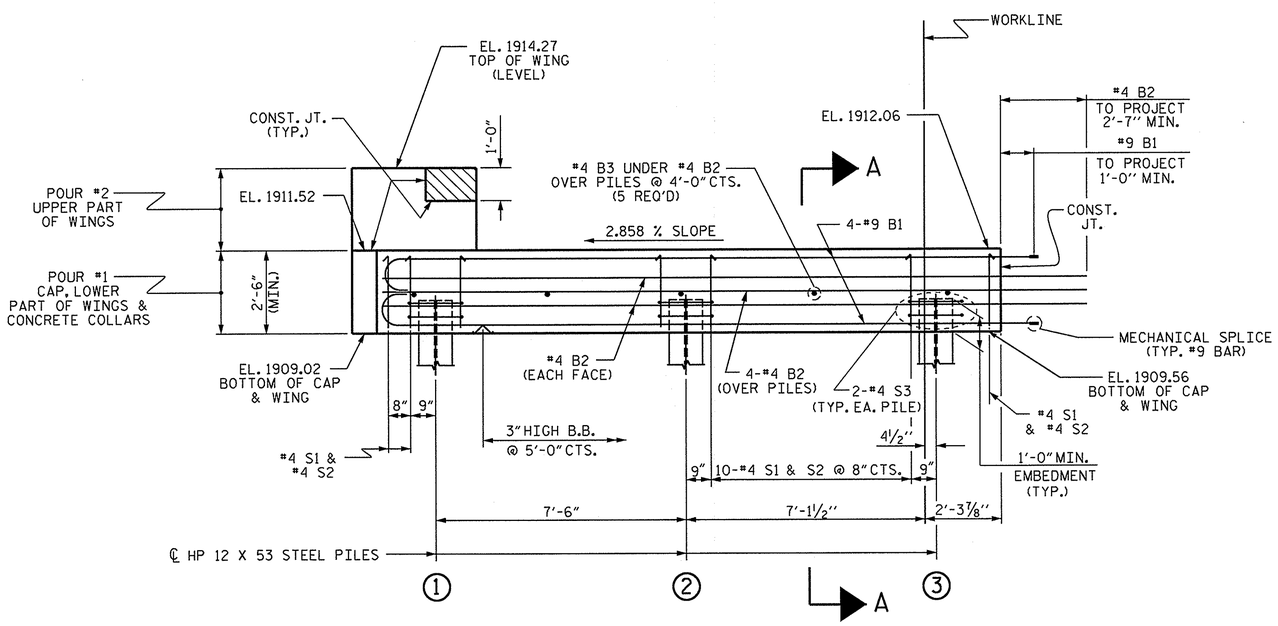

ELEVATION

WINGS NOT SHOWN FOR CLARITY.
CONCRETE COLLARS FOR STEEL PILES NOT SHOWN IN PLAN AND ELEVATION VIEWS FOR CLARITY.
SEE "CORROSION PROTECTION FOR STEEL PILES DETAIL", SHEET 3 OF 6.
ELEVATIONS SHOWN AT ℄ CAP.

PROJECT NO. BD-5114Q
SWAIN COUNTY
STATION: 13+22.00 -L-

SHEET 1 OF 6

STATE OF NORTH CAROLINA
DEPARTMENT OF TRANSPORTATION
RALEIGH

SUBSTRUCTURE

END BENT #2
STAGE I

NORTH CAROLINA PROFESSIONAL SEAL 15779 ENGINEER JOHN R. DUGGINS, JR.
2/18/13

REVISIONS							SHEET NO.
NO.	BY:	DATE:	NO.	BY:	DATE:		S-18
1			3				TOTAL SHEETS
2			4				26

ASSEMBLED BY : H. P. KIM	DATE : 09/12
CHECKED BY : J. R. DUGGINS	DATE : 01/13
DRAWN BY : DGE 03/10	
CHECKED BY : MKT 03/10	

18-FEB-2013 15:11
S:\DPG4\John\LIBR_Files\BD-5114Q\Final Plans\BD-5114Q_SD_E*.dgn
jduggins

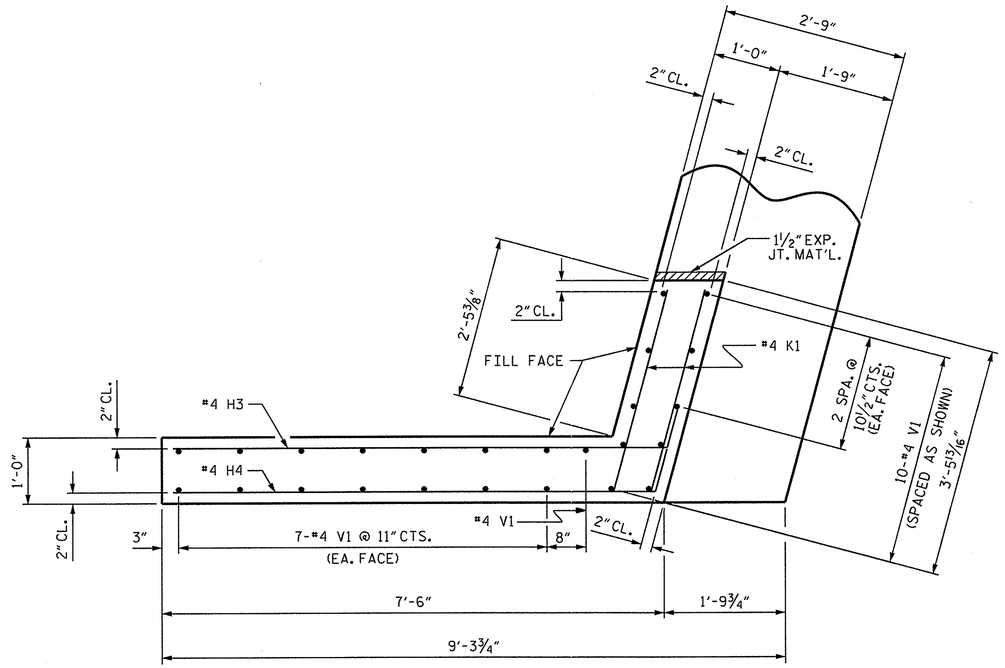

PLAN OF WING (W2)

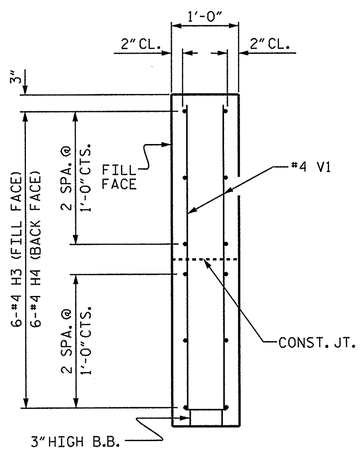

SECTION Y-Y

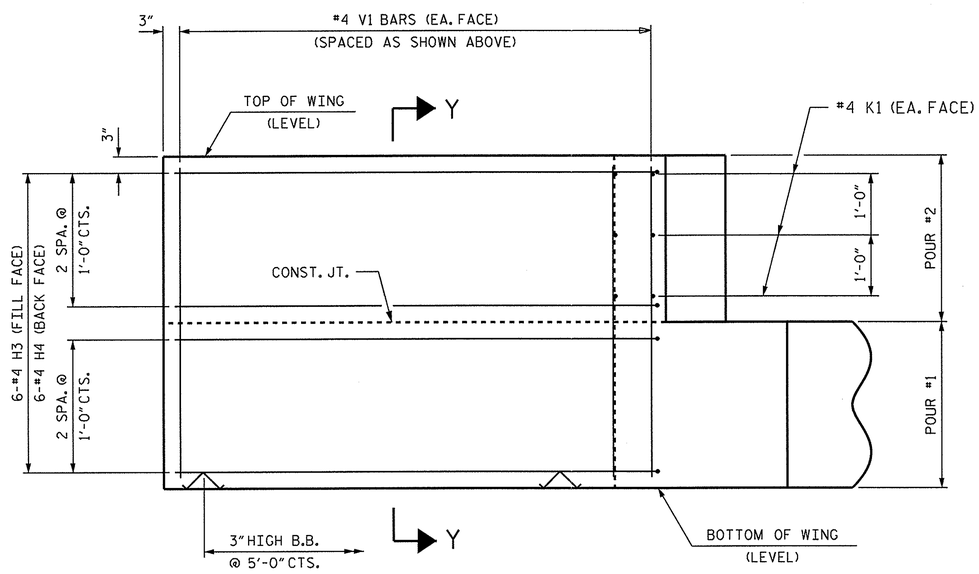

ELEVATION OF WING (W2)

PROJECT NO. BD-5114Q

SWAIN COUNTY

STATION: 13+22.00 -L-

SHEET 2 OF 6

STATE OF NORTH CAROLINA
DEPARTMENT OF TRANSPORTATION
RALEIGH

SUBSTRUCTURE
END BENT #2
WING DETAILS
STAGE I

NORTH CAROLINA PROFESSIONAL SEAL 15779 ENGINEER JOHN R. DUGGINS, JR.
2/18/13

REVISIONS								SHEET NO.
NO.	BY:	DATE:	NO.	BY:	DATE:			S-19
1			3					TOTAL SHEETS
2			4					26

ASSEMBLED BY :	H. P. KIM	DATE :	09/12
CHECKED BY :	J. R. DUGGINS	DATE :	01/13
DRAWN BY :	DGE	03/10	
CHECKED BY :	MKT	03/10	

18-FEB-2013 15:11
S:\DPG4\John\LIBR_Files\BD-5114Q\Final Plans\BD-5114Q_SD_E*.dgn
jduggins

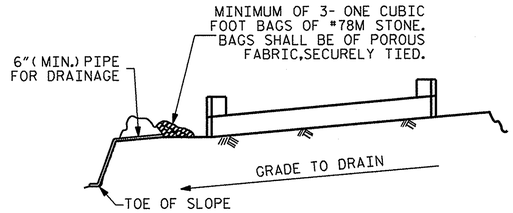

BAGGED STONE AND PIPE SHALL BE PLACED IMMEDIATELY AFTER COMPLETION OF END BENT EXCAVATION. PIPE MAY BE EITHER CONCRETE, CORRUGATED STEEL, CORRUGATED ALUMINUM ALLOY, OR CORRUGATED PLASTIC. PERFORATED PIPE WILL NOT BE ALLOWED.

BAGGED STONE SHALL REMAIN IN PLACE UNTIL THE ENGINEER DIRECTS THAT IT BE REMOVED. THE CONTRACTOR SHALL REMOVE AND DISPOSE OF SILT ACCUMULATIONS AT BAGGED STONE WHEN SO DIRECTED BY THE ENGINEER. BAGS SHALL BE REMOVED AND REPLACED WHENEVER THE ENGINEER DETERMINES THAT THEY HAVE DETERIORATED AND LOST THEIR EFFECTIVENESS.

NO SEPARATE PAYMENT WILL BE MADE FOR THIS WORK AND THE ENTIRE COST OF THIS WORK SHALL BE INCLUDED IN THE UNIT CONTRACT PRICE BID FOR THE SEVERAL PAY ITEMS.

TEMPORARY DRAINAGE AT END BENT

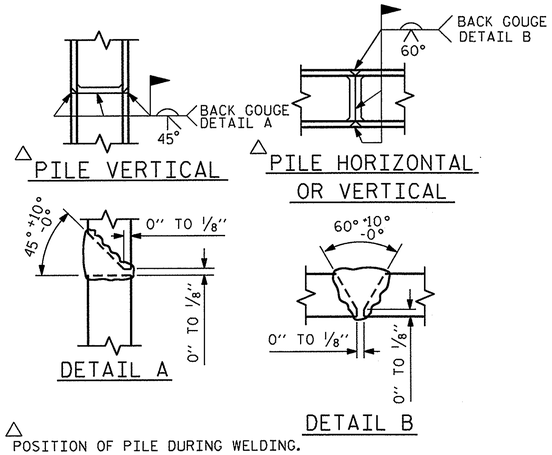

△ POSITION OF PILE DURING WELDING.

PILE SPLICE DETAILS

BAR TYPES

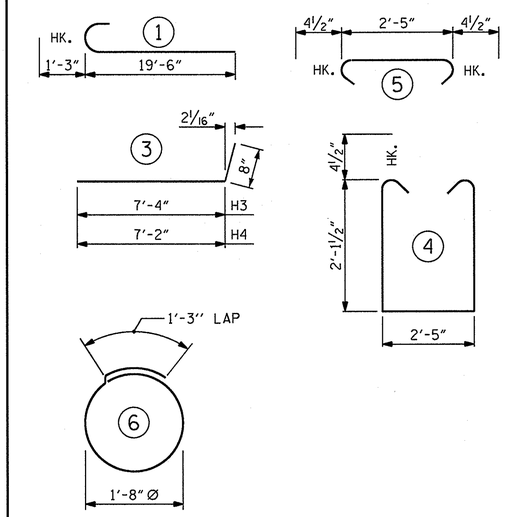

ALL BAR DIMENSIONS ARE OUT TO OUT.

BILL OF MATERIAL
END BENT #2 - STAGE I

BAR	NO.	SIZE	TYPE	LENGTH	WEIGHT
B1	8	#9	1	20'-9"	564
B2	8	#4	STR	21'-2"	113
B3	5	#4	STR	2'-5"	8
D1	10	#6	STR	1'-6"	23
H3	6	#4	3	8'-0"	32
H4	6	#4	3	7'-10"	31
K1	6	#4	STR	3'-1"	12
S1	23	#4	4	7'-5"	114
S2	23	#4	5	3'-2"	49
S3	6	#4	6	6'-6"	26
V1	25	#4	STR	4'-11"	82

REINFORCING STEEL 1054 LBS.

CLASS A CONCRETE BREAKDOWN (FOR ONE END BENT)

POUR #1 CAP, LOWER PART OF WINGS & COLLARS 5.9 C.Y.

POUR #2 UPPER PART OF WINGS 1.0 C.Y.

TOTAL CLASS A CONCRETE 6.9 C.Y.

END BENT #2 - (STAGE I)
HP 12 X 53 STEEL PILES
NO: 3 LIN. FT.= 105

PILES EXCAVATION (STAGE I)
IN SOIL 83 LIN. FT.
NOT IN SOIL 15 LIN. FT.

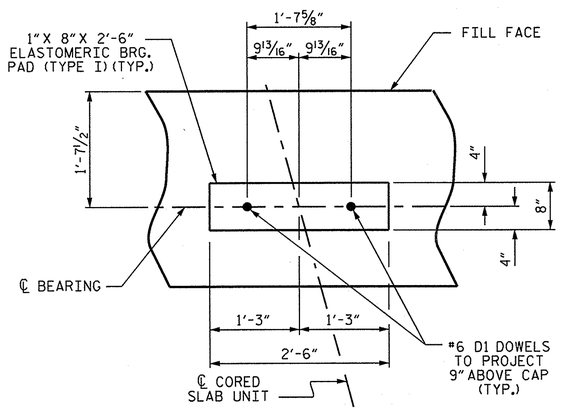

DETAIL "A"

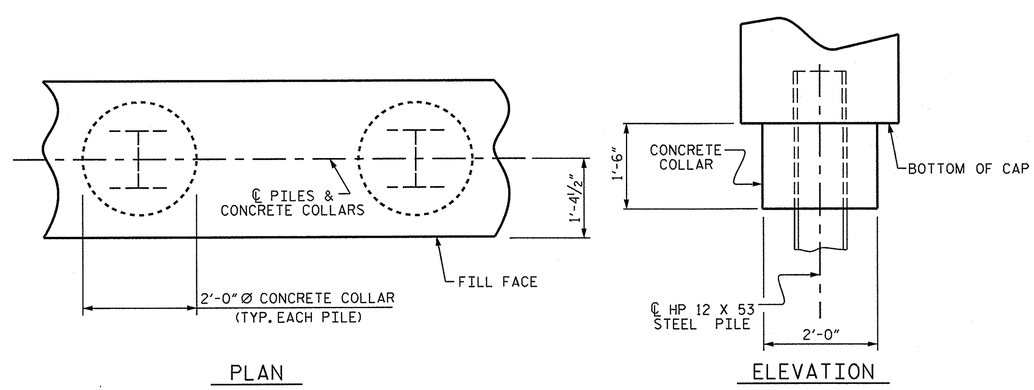

PLAN ELEVATION

CORROSION PROTECTION FOR STEEL PILES DETAIL

(END BENT No. 1 SHOWN, END BENT No. 2 SIMILAR BY ROTATION)

PROJECT NO. BD-5114Q
SWAIN COUNTY
STATION: 13+22.00 -L-

SHEET 3 OF 6

STATE OF NORTH CAROLINA
DEPARTMENT OF TRANSPORTATION
RALEIGH

SUBSTRUCTURE
END BENT #2
DETAILS
STAGE I

NORTH CAROLINA PROFESSIONAL SEAL 15779 ENGINEER JOHN R. DUGGINS, JR.
2/18/13

REVISIONS						SHEET NO.
NO.	BY:	DATE:	NO.	BY:	DATE:	S-20
1			3			TOTAL SHEETS
2			4			26

ASSEMBLED BY : H. P. KIM DATE : 09/12
CHECKED BY : J. R. DUGGINS DATE : 01/13
DRAWN BY : DGE 03/10
CHECKED BY : MKT 03/10

18-FEB-2013 15:10
S:\DPG4\John\LIBR_FIles\BD-51140\Final Plans\BD-51140_SD_E*.dgn
jduggins

NOTES

STIRRUPS IN CAP MAY BE SHIFTED AS NECESSARY TO CLEAR DOWELS.

THE CONCRETE IN THE SHADED AREA OF THE WING SHALL BE POURED AFTER THE VERTICAL CONCRETE BARRIER RAIL IS CAST IF SLIP FORMING IS USED.

FOR PILE SPLICE DETAILS, SEE SHEET 6 OF 6.

FOR WING DETAILS, SEE SHEET 5 OF 6.

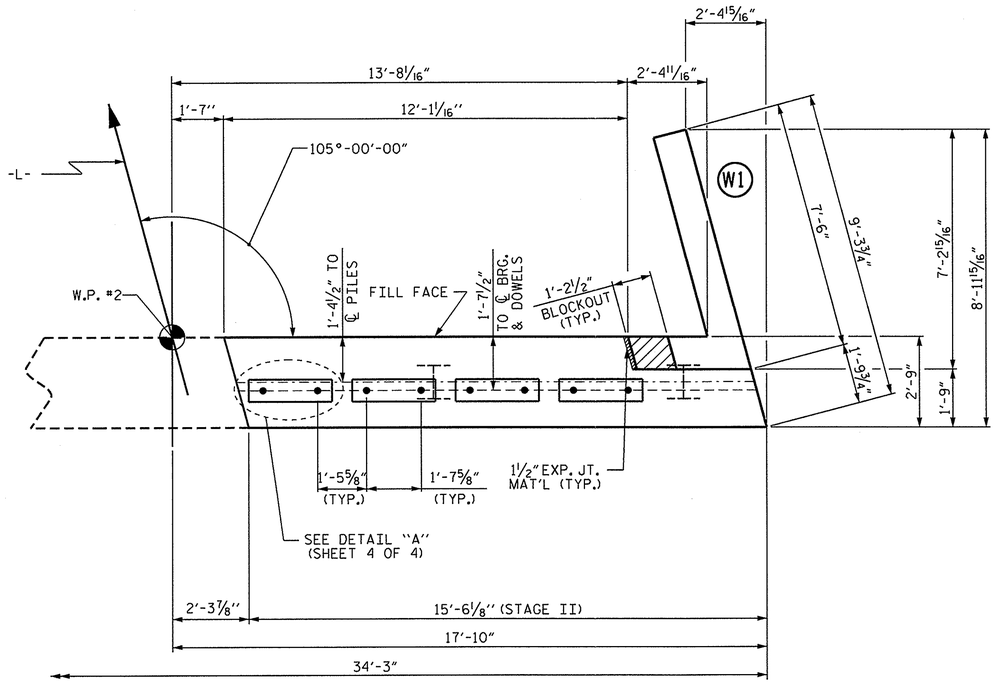

PLAN

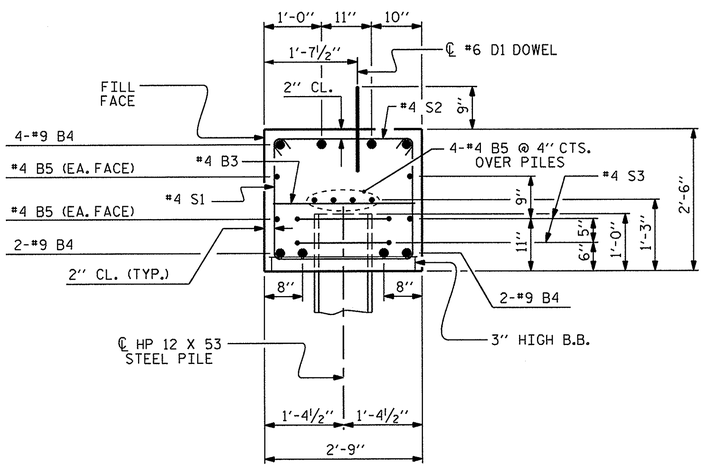

SECTION A-A

(CONCRETE COLLAR NOT SHOWN FOR CLARITY. SEE "CORROSION PROTECTION FOR STEEL PILES DETAIL.")

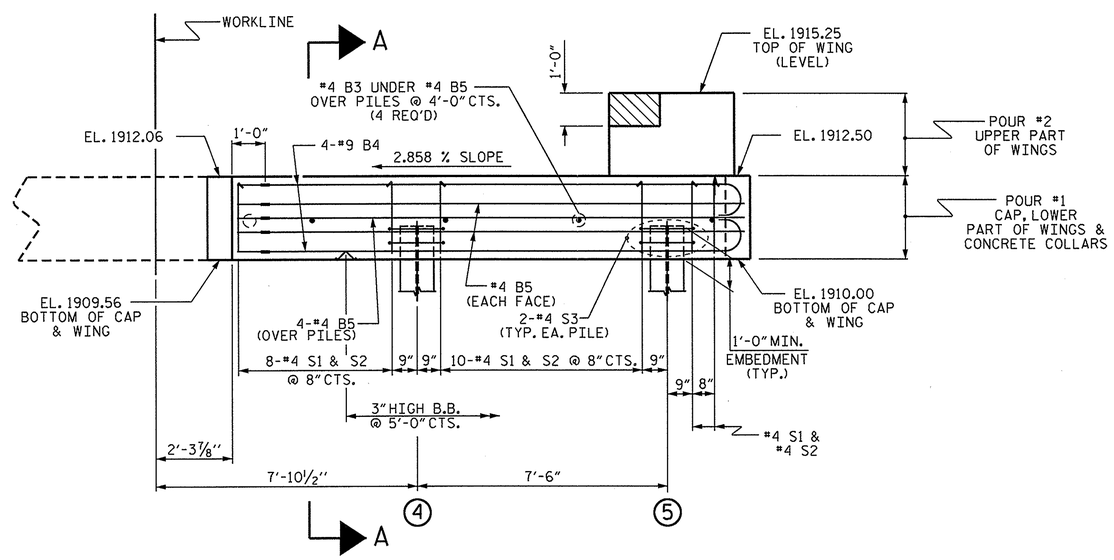

ELEVATION

WINGS NOT SHOWN FOR CLARITY.
CONCRETE COLLARS FOR STEEL PILES NOT SHOWN IN PLAN AND ELEVATION VIEWS FOR CLARITY.
SEE "CORROSION PROTECTION FOR STEEL PILES DETAIL", SHEET 6 OF 6.

TOP OF PILE ELEVATIONS	
4	1910.74
5	1910.96

PROJECT NO. BD-5114Q
SWAIN COUNTY
STATION: 13+22.00 -L-

SHEET 4 OF 6

STATE OF NORTH CAROLINA
DEPARTMENT OF TRANSPORTATION
RALEIGH

SUBSTRUCTURE

END BENT #2
STAGE II

NORTH CAROLINA PROFESSIONAL SEAL 15779 ENGINEER JOHN R. DUGGINS, JR.
2/18/13

REVISIONS							SHEET NO.
NO.	BY:	DATE:	NO.	BY:	DATE:		S-21
1			3				TOTAL SHEETS
2			4				26

ASSEMBLED BY : H. P. KIM	DATE : 09/12
CHECKED BY : J. R. DUGGINS	DATE : 01/13
DRAWN BY : DGE	03/10
CHECKED BY : MKT	03/10

18-FEB-2013 15:10
S:\DPG4\John\LIBR_Files\BD-51140\Final Plans\BD-51140_SD_E*.dgn
jduggins

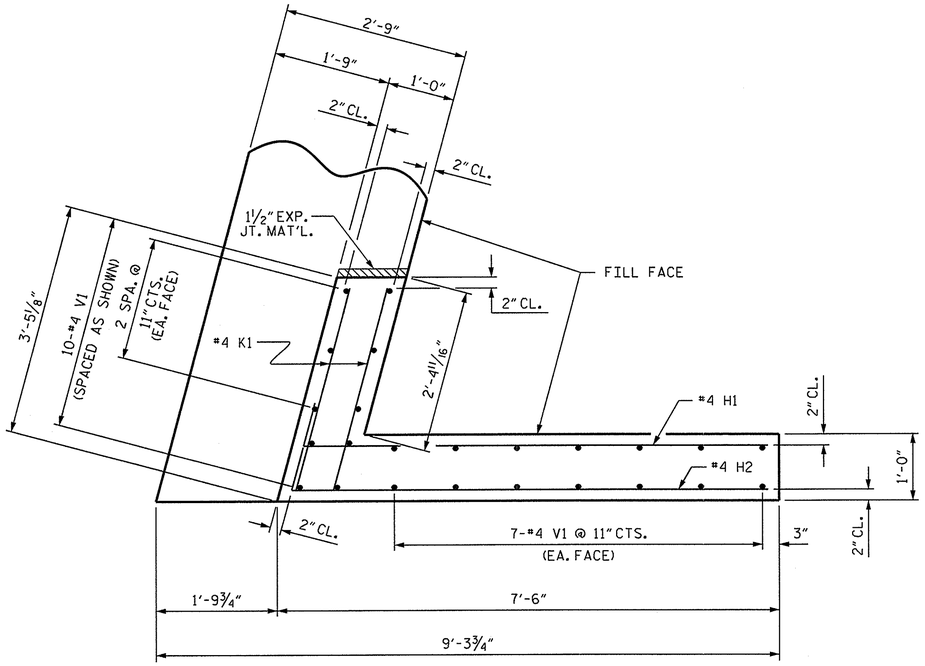

PLAN OF WING (W1)

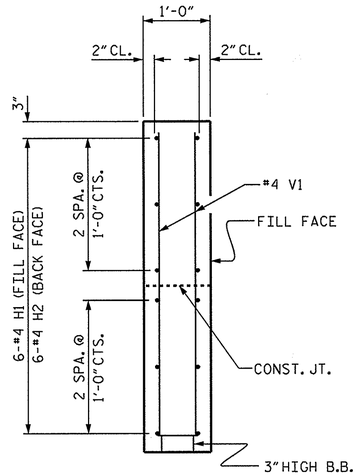

SECTION X-X

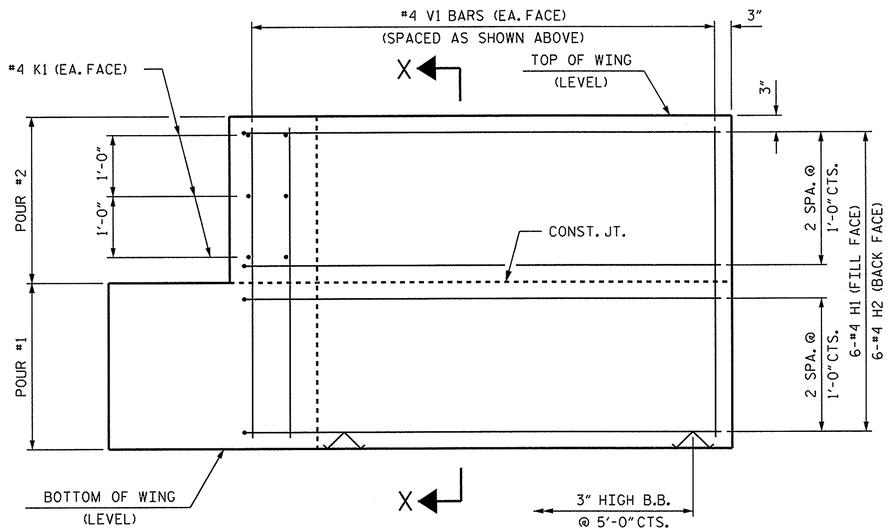

ELEVATION OF WING (W1)

PROJECT NO. BD-5114Q

SWAIN COUNTY

STATION: 13+22.00 -L-

SHEET 5 OF 6

STATE OF NORTH CAROLINA
DEPARTMENT OF TRANSPORTATION
RALEIGH

SUBSTRUCTURE
END BENT #2
WING DETAILS
STAGE II

NORTH CAROLINA PROFESSIONAL SEAL 15779 ENGINEER JOHN R. DUGGINS, JR.
2/18/13

REVISIONS						
NO.	BY:	DATE:	NO.	BY:	DATE:	
1			3			
2			4			

SHEET NO. S-22
TOTAL SHEETS 26

ASSEMBLED BY : H. P. KIM	DATE : 09/12
CHECKED BY : J. R. DUGGINS	DATE : 01/13
DRAWN BY : DGE 03/10	
CHECKED BY : MKT 03/10	

18-FEB-2013 15:09
S:\DPG4\John\LIBR_Files\BD-5114Q\Final Plans\BD-5114Q_SD_E*.dgn
jduggins

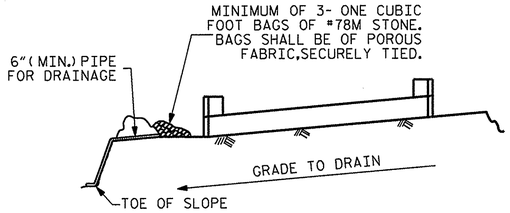

BAGGED STONE AND PIPE SHALL BE PLACED IMMEDIATELY AFTER COMPLETION OF END BENT EXCAVATION. PIPE MAY BE EITHER CONCRETE, CORRUGATED STEEL, CORRUGATED ALUMINUM ALLOY, OR CORRUGATED PLASTIC. PERFORATED PIPE WILL NOT BE ALLOWED.

BAGGED STONE SHALL REMAIN IN PLACE UNTIL THE ENGINEER DIRECTS THAT IT BE REMOVED. THE CONTRACTOR SHALL REMOVE AND DISPOSE OF SILT ACCUMULATIONS AT BAGGED STONE WHEN SO DIRECTED BY THE ENGINEER. BAGS SHALL BE REMOVED AND REPLACED WHENEVER THE ENGINEER DETERMINES THAT THEY HAVE DETERIORATED AND LOST THEIR EFFECTIVENESS.

NO SEPARATE PAYMENT WILL BE MADE FOR THIS WORK AND THE ENTIRE COST OF THIS WORK SHALL BE INCLUDED IN THE UNIT CONTRACT PRICE BID FOR THE SEVERAL PAY ITEMS.

TEMPORARY DRAINAGE AT END BENT

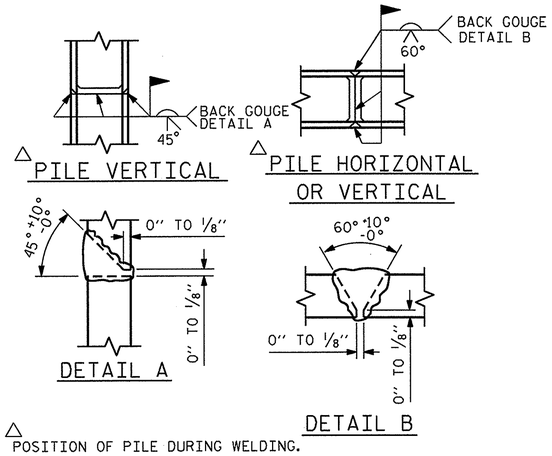

△ POSITION OF PILE DURING WELDING.

PILE SPLICE DETAILS

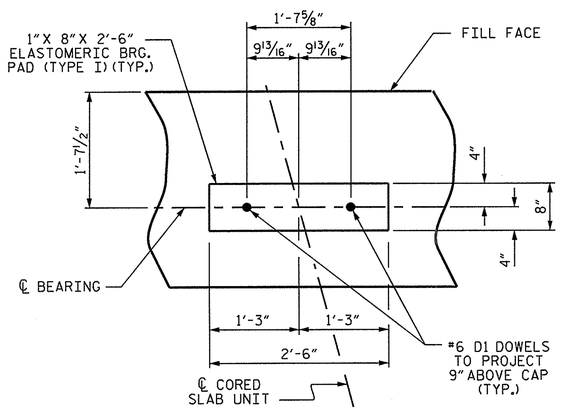

DETAIL "A"

BAR TYPES

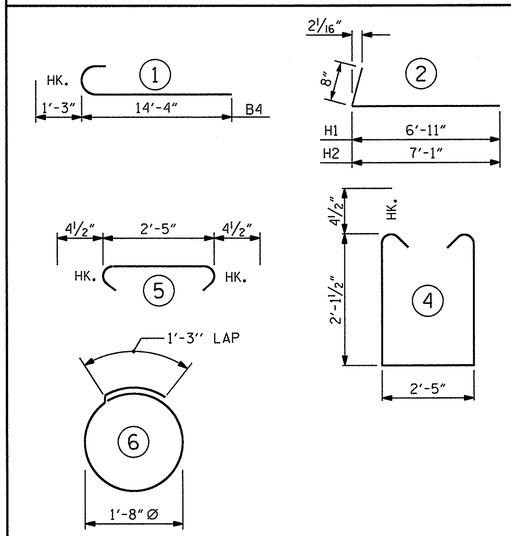

ALL BAR DIMENSIONS ARE OUT TO OUT.

BILL OF MATERIAL
END BENT #2 - STAGE II

BAR	NO.	SIZE	TYPE	LENGTH	WEIGHT
B4	8	#9	1	15'-7"	424
B5	8	#4	STR	15'-2"	81
B3	4	#4	STR	2'-5"	6
D1	8	#6	STR	1'-6"	18
H1	6	#4	2	7'-7"	30
H2	6	#4	2	7'-9"	31
K1	6	#4	STR	3'-1"	12
S1	20	#4	4	7'-5"	99
S2	20	#4	5	3'-2"	42
S3	4	#4	6	6'-6"	17
V1	24	#4	STR	4'-11"	79
REINFORCING STEEL					839 LBS.

CLASS A CONCRETE BREAKDOWN

POUR #1 CAP, LOWER PART OF WINGS & COLLARS 4.9 C.Y.

POUR #2 UPPER PART OF WINGS 1.0 C.Y.

TOTAL CLASS A CONCRETE 5.9 C.Y.

END BENT #2 - (STAGE II)
HP 12 X 53 STEEL PILES
NO: 2 LIN. FT.= 60

PILES EXCAVATION (STAGE II)
IN SOIL 55 LIN. FT.
NOT IN SOIL 10 LIN. FT.

TOTAL BILL OF MATERIAL

	CLASS A CONCRETE	REINFORCING STEEL	HP 12 X 53 STEEL PILES		PILE EXCAVATION LIN. FT.	
	CU. YDS.	LBS.	No.	LIN. FT.	IN SOIL	NOT IN SOIL
STAGE I	6.9	1054	3	105	83	15
STAGE II	5.9	839	2	60	55	10
E. BT.#2 TOTAL	12.8	1893	5	165	138	25

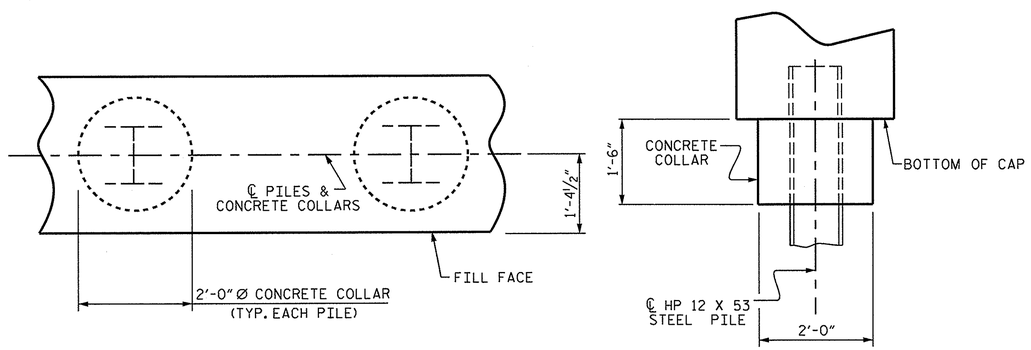

PLAN

ELEVATION

CORROSION PROTECTION FOR STEEL PILES DETAIL

(END BENT No. 1 SHOWN, END BENT No. 2 SIMILAR BY ROTATION)

PROJECT NO. BD-5114Q
SWAIN COUNTY
STATION: 13+22.00 -L-

SHEET 6 OF 6

STATE OF NORTH CAROLINA
DEPARTMENT OF TRANSPORTATION
RALEIGH

SUBSTRUCTURE
END BENT #2
DETAILS
STAGE II

NORTH CAROLINA PROFESSIONAL SEAL 15779 ENGINEER JOHN R. DUGGINS, JR.
2/18/13

REVISIONS							SHEET NO.
NO.	BY:	DATE:	NO.	BY:	DATE:		S-23
1			3				TOTAL SHEETS
2			4				26

ASSEMBLED BY : H. P. KIM	DATE : 09/12	
CHECKED BY : J. R. DUGGINS	DATE : 01/13	
DRAWN BY : DGE 03/10		
CHECKED BY : MKT 03/10		

18-FEB-2013 15:09
S:\DPG4\John\LIBR_Files\BD-51140\Final Plans\BD-51140_SD_E*.dgn
jduggins

NOTES :

PLACE RIP RAP ALONG STREAM BANKS AS SHOWN.

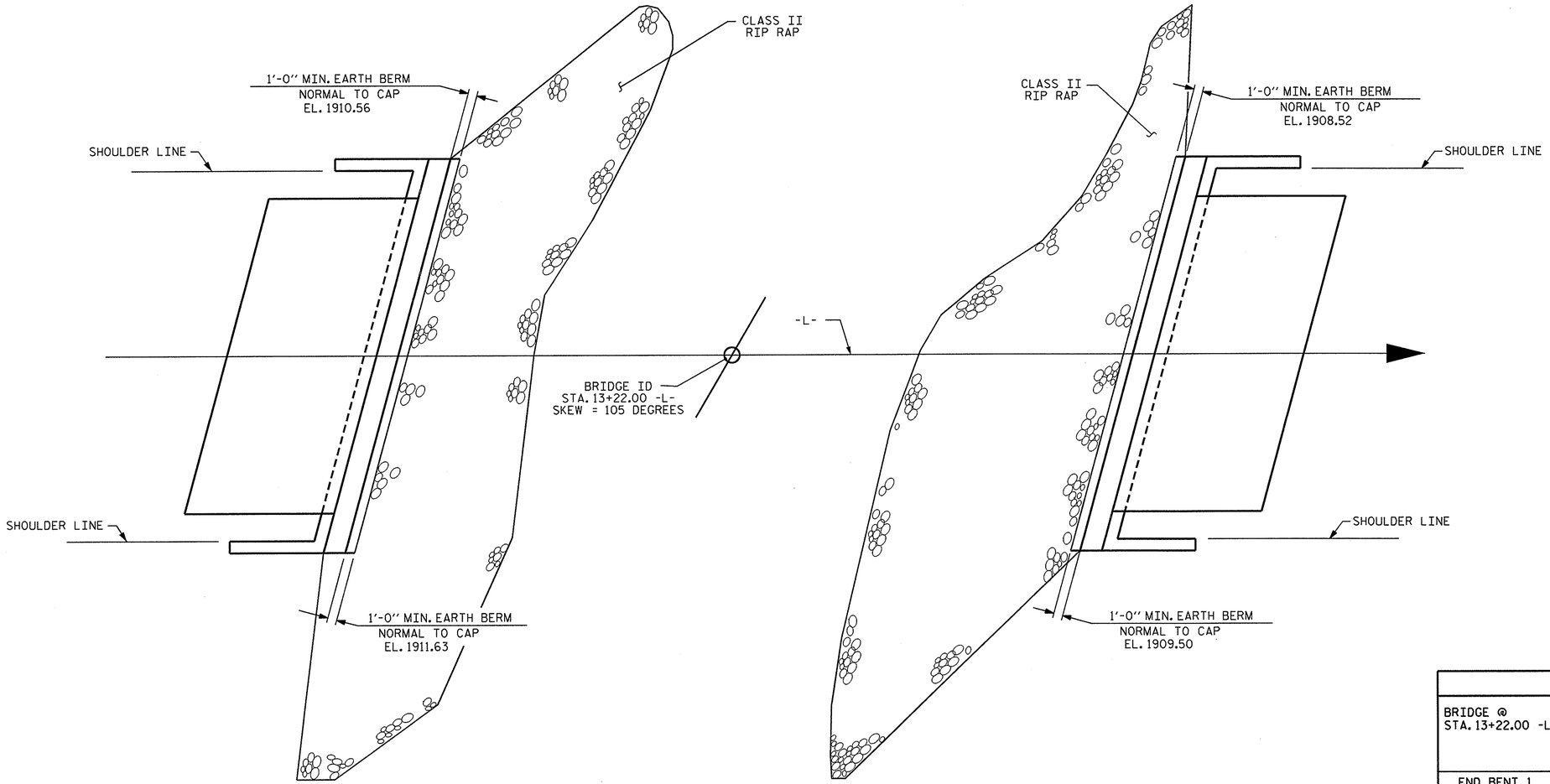

END BENT No. 1

END BENT No. 2

PLAN

ESTIMATED QUANTITIES		
BRIDGE @ STA. 13+22.00 -L-	RIP RAP CLASS II (2'-0" THICK)	GEOTEXTILE FOR DRAINAGE
	TONS	SQUARE YARDS
END BENT 1	60	67
END BENT 2	65	73

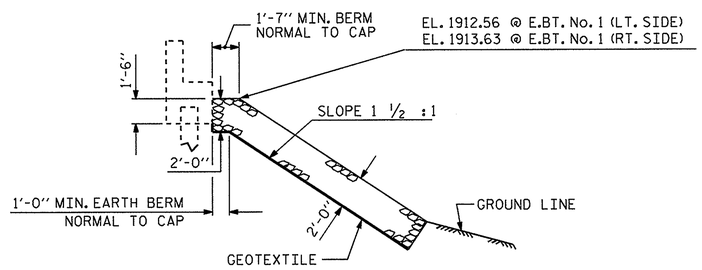

℄ SECTION @ END BENT No. 1

BERM RIP RAPPED

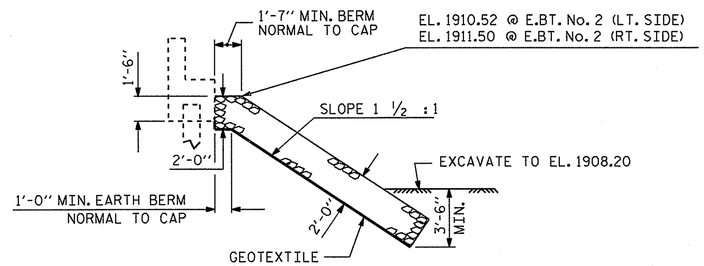

℄ SECTION @ END BENT No. 2

BERM RIP RAPPED

PROJECT NO. BD-5114Q

SWAIN COUNTY

STATION: 13+22.00 -L-

STATE OF NORTH CAROLINA
DEPARTMENT OF TRANSPORTATION
RALEIGH

RIP RAP DETAILS

NORTH CAROLINA PROFESSIONAL SEAL 15779 ENGINEER JOHN R. DUGGINS, JR.
2/18/13

REVISIONS							SHEET NO.
NO.	BY:	DATE:	NO.	BY:	DATE:		S-24
1			3				TOTAL SHEETS
2			4				26

ASSEMBLED BY : V.X. NGUYEN		DATE : 12-10-12	
CHECKED BY : J.R. DUGGINS		DATE : 02-13	
DRAWN BY : REK 1/84	REV. 5/1/06R	TLA/GM	
CHECKED BY : RDU 1/84	REV. 10/1/11	MAA/GM	
	REV. 12/21/11	MAA/GM	

18-FEB-2013 15:08
S:\OPG4\John\LIBR_Files\BD-51140\Final Plans\BD-51140_SD_RR.dgn
jduggins

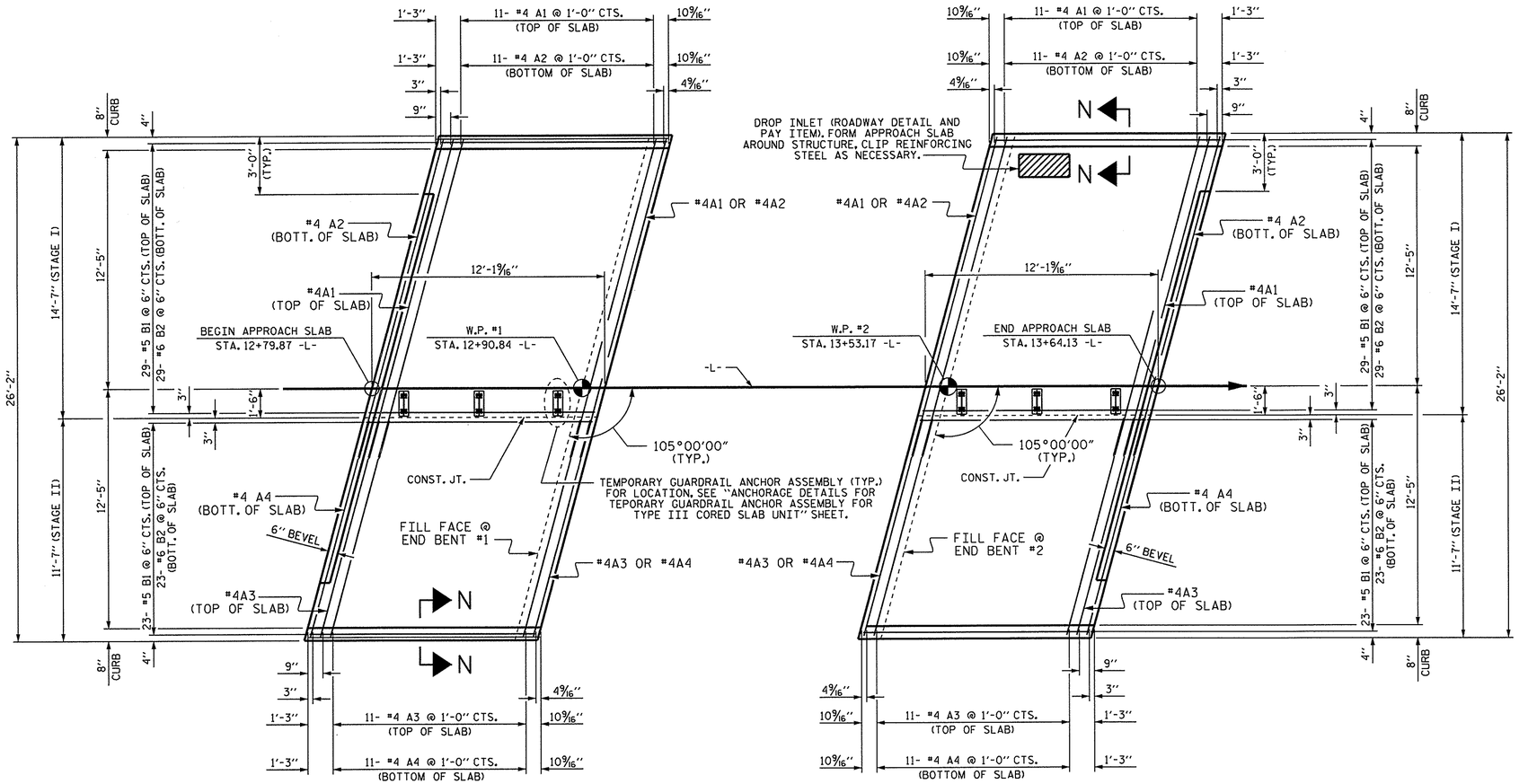

PLAN @ END BENT #1

PLAN @ END BENT #2

DIMENSIONS SHOWN ARE TYPICAL FOR BOTH APPROACH SLABS

BILL OF MATERIAL

APPROACH SLAB AT EB #1 (STAGE I)

BAR	NO.	SIZE	TYPE	LENGTH	WEIGHT
* A1	13	#4	STR	17'-2"	149
A2	13	#4	STR	16'-11"	147
* B1	29	#5	STR	11'-1"	335
B2	29	#6	STR	11'-7"	505
REINFORCING STEEL				LBS.	652
* EPOXY COATED REINFORCING STEEL				LBS.	484
CLASS AA CONCRETE				C. Y.	9.1

APPROACH SLAB AT EB #2 (STAGE I)

BAR	NO.	SIZE	TYPE	LENGTH	WEIGHT
* A1	13	#4	STR	17'-2"	149
A2	13	#4	STR	16'-11"	147
* B1	29	#5	STR	11'-1"	335
B2	29	#6	STR	11'-7"	505
REINFORCING STEEL				LBS.	652
* EPOXY COATED REINFORCING STEEL				LBS.	484
CLASS AA CONCRETE				C. Y.	9.1

APPROACH SLAB AT EB #1 (STAGE II)

BAR	NO.	SIZE	TYPE	LENGTH	WEIGHT
* A1	13	#4	STR	11'-8"	101
A2	13	#4	STR	11'-8"	101
* B1	23	#5	STR	11'-1"	266
B2	23	#6	STR	11'-7"	400
REINFORCING STEEL				LBS.	501
* EPOXY COATED REINFORCING STEEL				LBS.	367
CLASS AA CONCRETE				C. Y.	7.2

APPROACH SLAB AT EB #2 (STAGE II)

BAR	NO.	SIZE	TYPE	LENGTH	WEIGHT
* A1	13	#4	STR	11'-8"	101
A2	13	#4	STR	11'-8"	101
* B1	23	#5	STR	11'-1"	266
B2	23	#6	STR	11'-7"	400
REINFORCING STEEL				LBS.	501
* EPOXY COATED REINFORCING STEEL				LBS.	367
CLASS AA CONCRETE				C. Y.	7.2

SPLICE LENGTHS

BAR SIZE	EPOXY COATED	UNCOATED
#4	2'-0"	1'-9"
#5	2'-6"	2'-2"
#6	3'-10"	2'-7"

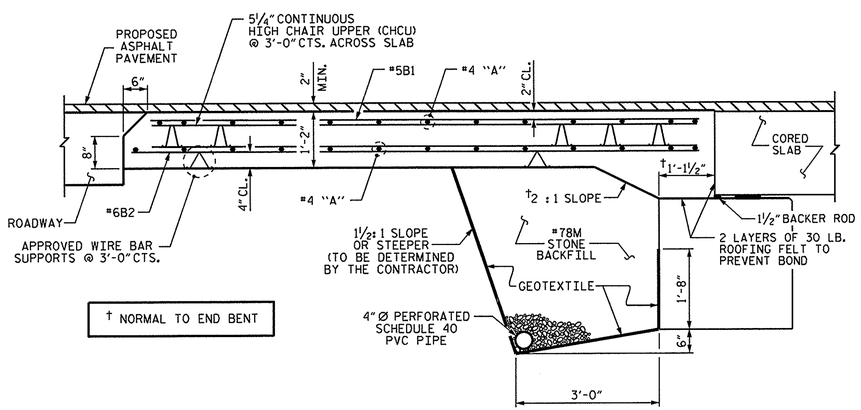

SECTION THRU SLAB

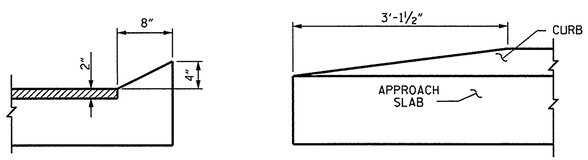

SECTION N-N

END OF CURB WITHOUT SHOULDER BERM GUTTER

CURB DETAILS

PROJECT NO. BD-5114Q

SWAIN COUNTY

STATION: 13+22.00 -L-

SHEET 1 OF 2

STATE OF NORTH CAROLINA
DEPARTMENT OF TRANSPORTATION
RALEIGH

BRIDGE APPROACH SLAB FOR PRESTRESSED CONCRETE CORED SLAB UNIT (SUB-REGIONAL TIER) 105° SKEW

NORTH CAROLINA PROFESSIONAL SEAL 15779 ENGINEER JOHN R. DUGGINS, JR.
3/21/13

REVISIONS							SHEET NO.
NO.	BY:	DATE:	NO.	BY:	DATE:		S-25
1			3				TOTAL SHEETS
2			4				26

ASSEMBLED BY : V. NGUYEN		DATE : 12/12	
CHECKED BY : J. R. DUGGINS		DATE : 02/03	
DRAWN BY : SHS/MAA 5-09	REV. 12-11	MAA/AAC	
CHECKED BY : BCH 5-09			

21-MAR-2013 15:34
S:\DPG4\John\LIBR_Files\BD-5114Q\Final Plans\BD-5114Q_SD_AS.dgn
jduggins

NOTES

FOR BRIDGE APPROACH FILL INCLUDING GEOTEXTILE, 4"Ø DRAINAGE PIPE, AND #78M STONE BACKFILL, SEE ROADWAY PLANS.

GEOTEXTILE SHALL BE TYPE 1 IN ACCORDANCE WITH THE STANDARD SPECIFICATIONS SECTION 1056.

#78M STONE BACKFILL (CLASS V SELECT MATERIAL) SHALL BE IN ACCORDANCE WITH STANDARD SPECIFICATIONS SECTION 1016.

#78M STONE BACKFILL IS TO BE CONTINUOUS ALONG FILL FACE OF BACKWALL FROM OUTSIDE EDGE TO OUTSIDE EDGE OF APPROACH SLAB.

FOR THE 4"Ø DRAINAGE PIPE OUTLET(S), SEE ROADWAY STANDARD DRAWINGS.

AREA BETWEEN THE WINGWALL AND APPROACH SLAB SHALL BE GRADED TO DRAIN THE WATER AWAY FROM THE FILL FACE OF THE BRIDGE AND SHALL BE PAVED. SEE ROADWAY PLANS.

APPROACH SLAB GROOVING IS NOT REQUIRED.

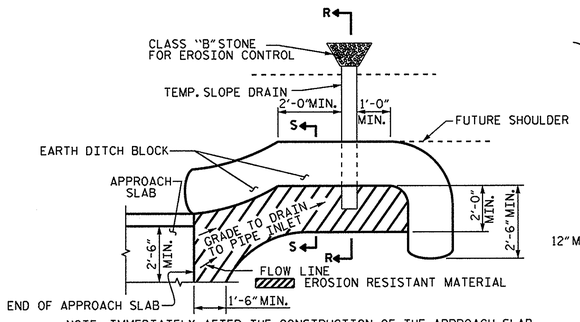

NOTE: IMMEDIATELY AFTER THE CONSTRUCTION OF THE APPROACH SLAB, THE CONTRACTOR SHALL PROVIDE TEMPORARY BERM AND SLOPE DRAIN. CONTRACTOR SHALL GRADE TO PIPE INLET AND PROVIDE EROSION RESISTANT MATERIAL AS SHOWN. THE EROSION RESISTANT MATERIAL SHALL BE EITHER 1) ASPHALT PLANT MIX, TYPE 1 OR TYPE 2, MIN. 2" DEPTH, 2) EROSION CONTROL MAT, OR 3) CONCRETE, AS DIRECTED BY THE ENGINEER. THE SLOPE DRAIN SHALL CONSIST OF A NON-PERFORATED TEMPORARY DRAINAGE PIPE, 12 INCHES IN DIAMETER.

PLAN VIEW

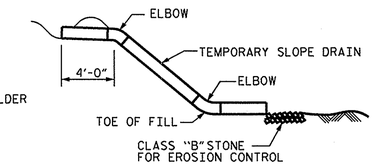

SECTION R-R

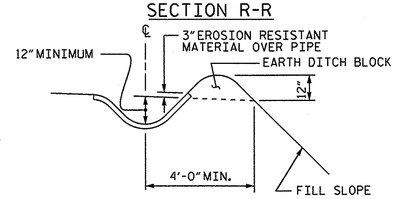

SECTION S-S

TEMPORARY BERM AND SLOPE DRAIN DETAILS

(TO BE USED WHEN SHOULDER BERM GUTTER IS REQUIRED)

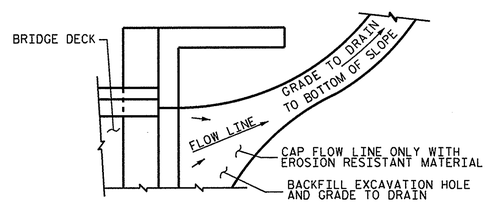

NOTE: IF THE APPROACH SLAB IS NOT CONSTRUCTED IMMEDIATELY AFTER THE BACKFILLING OF THE END BENT EXCAVATION, GRADE TO DRAIN TO THE BOTTOM OF THE SLOPE AND PROVIDE EROSION RESISTANT MATERIAL, SUCH AS FIBERGLASS ROVING OR AS DIRECTED BY THE ENGINEER TO PREVENT SOIL EROSION AND TO PROTECT THE AREA ADJACENT TO THE STRUCTURE. THE CONTRACTOR WILL BE REQUIRED TO REMOVE THESE MATERIALS PRIOR TO CONSTRUCTION OF THE APPROACH SLAB.

TEMPORARY DRAINAGE DETAIL

PROJECT NO. BD-5114Q

SWAIN COUNTY

STATION: 13+22.00 -L-

SHEET 2 OF 2

STATE OF NORTH CAROLINA
DEPARTMENT OF TRANSPORTATION
RALEIGH

BRIDGE APPROACH SLAB DETAILS

NORTH CAROLINA PROFESSIONAL SEAL 15779 ENGINEER JOHN R. DUGGINS, JR.
2/18/13

REVISIONS							
NO.	BY:	DATE:	NO.	BY:	DATE:		SHEET NO. S-26
1			3				TOTAL SHEETS 26
2			4				

ASSEMBLED BY : V. NGUYEN		DATE : 12/12	
CHECKED BY : J. R. DUGGINS		DATE : 02/03	
DRAWN BY : SHS/MAA 5-09	REV. 12-11		MAA/AAC
CHECKED BY : BCH 5-09			

18-FEB-2013 15:07
S:\DPG4\John\LIBR_Files\BD-51140\Final Plans\BD-51140_SD_AS.dgn
jduggins

STANDARD NOTES

DESIGN DATA:

SPECIFICATIONS	A.A.S.H.T.O. (CURRENT)
LIVE LOAD	SEE PLANS
IMPACT ALLOWANCE	SEE A.A.S.H.T.O.
STRESS IN EXTREME FIBER OF	
STRUCTURAL STEEL - AASHTO M270 GRADE 36	20,000 LBS. PER SQ. IN.
- AASHTO M270 GRADE 50W	27,000 LBS. PER SQ. IN.
- AASHTO M270 GRADE 50	27,000 LBS. PER SQ. IN.
REINFORCING STEEL IN TENSION	
GRADE 60	24,000 LBS. PER SQ. IN.
CONCRETE IN COMPRESSION	1,200 LBS. PER SQ. IN.
CONCRETE IN SHEAR	SEE A.A.S.H.T.O.
STRUCTURAL TIMBER - TREATED OR	
UNTREATED - EXTREME FIBER STRESS	1,800 LBS. PER SQ. IN.
COMPRESSION PERPENDICULAR TO GRAIN OF TIMBER	375 LBS. PER SQ. IN.
EQUIVALENT FLUID PRESSURE OF EARTH	30 LBS. PER CU. FT. (MINIMUM)

MATERIAL AND WORKMANSHIP:

EXCEPT AS MAY OTHERWISE BE SPECIFIED ON PLANS OR IN THE SPECIAL PROVISIONS, ALL MATERIAL AND WORKMANSHIP SHALL BE IN ACCORDANCE WITH THE 2012 "STANDARD SPECIFICATIONS FOR ROADS AND STRUCTURES" OF THE N. C. DEPARTMENT OF TRANSPORTATION.

STEEL SHEET PILING FOR PERMANENT OR TEMPORARY APPLICATIONS SHALL BE HOT ROLLED.

CONCRETE:

UNLESS OTHERWISE REQUIRED ON PLANS, CLASS A CONCRETE SHALL BE USED FOR ALL PORTIONS OF ALL STRUCTURES WITH THE EXCEPTION THAT: CLASS AA CONCRETE SHALL BE USED IN BRIDGE SUPERSTRUCTURES, ABUTMENT BACKWALLS, AND APPROACH SLABS; AND CLASS B CONCRETE SHALL BE USED FOR SLOPE PROTECTION AND RIP RAP.

CONCRETE CHAMFERS:

UNLESS OTHERWISE NOTED ON THE PLANS, ALL EXPOSED CORNERS ON STRUCTURES SHALL BE CHAMFERED 3/4" WITH THE FOLLOWING EXCEPTIONS: TOP CORNERS OF CURBS MAY BE ROUNDED TO 1-1/2" RADIUS WHICH IS BUILT INTO CURB FORMS; CORNERS OF TRANSVERSE FLOOR EXPANSION JOINTS SHALL BE ROUNDED WITH A 1/4" FINISHING TOOL UNLESS OTHERWISE REQUIRED ON PLANS; AND CORNERS OF EXPANSION JOINTS IN THE ROADWAY FACES AND TOPS OF CURBS AND SIDEWALKS SHALL BE ROUNDED TO A 1/4" RADIUS WITH A FINISHING STONE OR TOOL UNLESS OTHERWISE REQUIRED ON PLANS.

DOWELS:

DOWELS WHEN INDICATED ON PLANS AS FOR CULVERT EXTENSIONS, SHALL BE EMBEDDED AT LEAST 12" INTO THE OLD CONCRETE AND GROUTED INTO PLACE WITH 1:2 CEMENT MORTAR.

ALLOWANCE FOR DEAD LOAD DEFLECTION, SETTLEMENT, ETC. IN CASTING SUPERSTRUCTURES:

BRIDGES SHALL BE BUILT ON THE GRADE OR VERTICAL CURVE SHOWN ON PLANS. SLABS, CURBS AND PARAPETS SHALL CONFORM TO THE GRADE OR CURVE.

ALL DIMENSIONS WHICH ARE GIVEN IN SECTION AND ARE AFFECTED BY DEAD LOAD DEFLECTIONS ARE DIMENSIONS AT CENTER LINE OF BEARING UNLESS OTHERWISE NOTED ON PLANS. IN SETTING FORMS FOR STEEL BEAM BRIDGES AND PRESTRESSED CONCRETE GIRDER BRIDGES, ADJUSTMENTS SHALL BE MADE DUE TO THE DEAD LOAD DEFLECTIONS FOR THE ELEVATIONS SHOWN. WHERE BLOCKS ARE SHOWN OVER BEAMS FOR BUILDING UP TO THE SLAB, THE VERTICAL DIMENSIONS OF THE BLOCKS SHALL BE ADJUSTED BETWEEN BEARINGS TO COMPENSATE FOR DEAD LOAD DEFLECTIONS, VERTICAL CURVE ORDINATE, AND ACTUAL BEAM CAMBER. WHERE BOTTOM OF SLAB IS IN LINE WITH BOTTOM OF TOP FLANGES, DEPTH OF SLAB BETWEEN BEARINGS SHALL BE ADJUSTED TO COMPENSATE FOR DEAD LOAD DEFLECTION, VERTICAL CURVE ORDINATE, AND ACTUAL BEAM CAMBER.

IN SETTING FALSEWORK AND FORMS FOR REINFORCED CONCRETE SPANS, AN ALLOWANCE SHALL BE MADE FOR DEAD LOAD DEFLECTIONS, SETTLEMENT OF FALSEWORK, AND PERMANENT CAMBER WHICH SHALL BE PROVIDED FOR IN ADDITION TO THE ELEVATIONS SHOWN. AFTER REMOVAL OF THE FALSEWORK, THE FINISHED STRUCTURES SHALL CONFORM TO THE PROFILE AND ELEVATIONS SHOWN ON THE PLANS AND CONSTRUCTION ELEVATIONS FURNISHED BY THE ENGINEER.

DETAILED DRAWINGS FOR FALSEWORK OR FORMS FOR BRIDGE SUPERSTRUCTURE AND ANY STRUCTURE OR PARTS OF A STRUCTURE AS NOTED ON THE PLANS SHALL BE SUBMITTED TO THE ENGINEER FOR APPROVAL BEFORE CONSTRUCTION OF THE FALSEWORK OR FORMS IS STARTED.

REINFORCING STEEL:

ALL REINFORCING STEEL SHALL BE DEFORMED. DIMENSIONS RELATIVE TO PLACEMENT OF REINFORCING ARE TO CENTERS OF BARS UNLESS OTHERWISE INDICATED IN THE PLANS. DIMENSIONS ON BAR DETAILS ARE TO CENTERS OF BARS OR ARE OUT TO OUT AS INDICATED ON PLANS.

WIRE BAR SUPPORTS SHALL BE PROVIDED FOR REINFORCING STEEL WHERE INDICATED ON THE PLANS. WHEN BAR SUPPORT PIECES ARE PLACED IN CONTINUOUS LINES, THEY SHALL BE SO PLACED THAT THE ENDS OF THE SUPPORTING WIRES SHALL BE LAPPED TO LOCK LEGS ON ADJOINING PIECES.

STRUCTURAL STEEL:

AT THE CONTRACTOR'S OPTION, HE MAY SUBSTITUTE 7/8" Ø SHEAR STUDS FOR THE ¾" Ø STUDS SPECIFIED ON THE PLANS. THIS SUBSTITUTION SHALL BE MADE AT THE RATE OF 3 - 7/8" Ø STUDS FOR 4 - 3/4" Ø STUDS, AND STUD SPACING CHANGES SHALL BE MADE AS NECESSARY TO PROVIDE THE SAME EQUIVALENT NUMBER OF 7/8" Ø STUDS ALONG THE BEAM AS SHOWN FOR 3/4" Ø STUDS BASED ON THE RATIO OF 3 - 7/8" Ø STUDS FOR 4 - 3/4" Ø STUDS. STUDS OF THE LENGTH SPECIFIED ON THE PLANS MUST BE PROVIDED. THE MAXIMUM SPACING SHALL BE 2'-0".

EXCEPT AT THE INTERIOR SUPPORTS OF CONTINUOUS BEAMS WHERE THE COVER PLATE IS IN CONTACT WITH BEARING PLATE, THE CONTRACTOR MAY, AT HIS OPTION, SUBSTITUTE FOR THE COVER PLATES DESIGNATED ON THE PLANS COVER PLATES OF THE EQUIVALENT AREA PROVIDED THESE PLATES ARE AT LEAST 5/16" IN THICKNESS AND DO NOT EXCEED A WIDTH EQUAL TO THE FLANGE WIDTH LESS 2" OR A THICKNESS EQUAL TO 2 TIMES THE FLANGE THICKNESS. THE SIZE OF FILLET WELDS SHALL CONFORM TO THE REQUIREMENTS OF THE CURRENT ANSI/AASHTO/AWS "BRIDGE WELDING CODE". ELECTROSLAG WELDING WILL NOT BE PERMITTED.

WITH THE SOLE EXCEPTION OF EDGES AT SURFACES WHICH BEAR ON OTHER SURFACES, ALL SHARP EDGES AND ENDS OF SHAPES AND PLATES SHALL BE SLIGHTLY ROUNDED BY SUITABLE MEANS TO A RADIUS OF APPROXIMATELY 1/16 INCH OR EQUIVALENT FLAT SURFACE AT A SUITABLE ANGLE PRIOR TO PAINTING, GALVANIZING, OR METALLIZING.

HANDRAILS AND POSTS:

METAL STANDARDS AND FACES OF THE CONCRETE END POSTS FOR THE METAL RAIL SHALL BE SET NORMAL TO THE GRADE OF THE CURB, UNLESS OTHERWISE SHOWN ON PLANS. THE METAL RAIL AND TOPS OF CONCRETE POSTS USED WITH THE ALUMINUM RAIL SHALL BE BUILT PARALLEL TO THE GRADE OF THE CURB.

METAL HANDRAILS SHALL BE IN ACCORDANCE WITH THE PLANS. RAILS SHALL BE AS MANUFACTURED FOR BRIDGE RAILING. CASTINGS SHALL BE OF A UNIFORM APPEARANCE. FINS AND OTHER DEFORMATIONS RESULTING FROM CASTING OR OTHERWISE SHALL BE REMOVED IN A MANNER SO THAT A UNIFORM COLORING OF THE COMPLETED CASTING SHALL BE OBTAINED. CASTINGS WITH DISCOLORATIONS OR OF NON-UNIFORM COLORING WILL NOT BE ACCEPTED. CERTIFIED MILL REPORTS ARE REQUIRED FOR METAL RAILS AND POSTS.

SPECIAL NOTES:

GENERALLY, IN CASE OF DISCREPANCY, THIS STANDARD SHEET OF NOTES SHALL GOVERN OVER THE SPECIFICATIONS, BUT THE REMAINDER OF THE PLANS SHALL GOVERN OVER NOTES HEREON, AND SPECIAL PROVISIONS SHALL GOVERN OVER ALL. SEE SPECIFICATIONS ARTICLE 105-4.

ENGLISH

JANUARY, 1990