CONTRACT: DN00081 TIP NO: BD-5114N

STATE OF NORTH CAROLINA
DIVISION OF HIGHWAYS
GRAHAM COUNTY

STATE	STATE PROJECT REFERENCE NO.	SHEET NO.	TOTAL SHEETS
N.C.	BD-5114N		

STATE PROJ. NO.	F.A. PROJ. NO.	DESCRIPTION
45360.1.14	BRZ-1223(9)	P.E.
45360.2.14	BRZ-1223(9)	R / W
45360.3.14	BRZ-1223(9)	CONST.

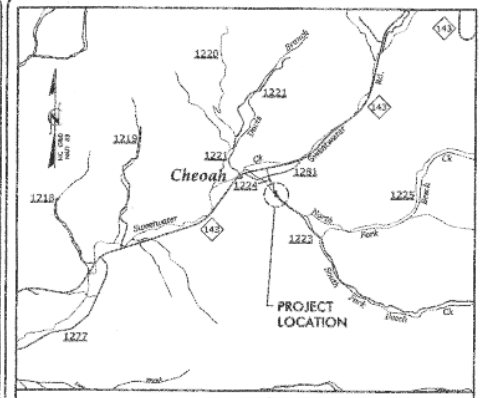

VICINITY MAP

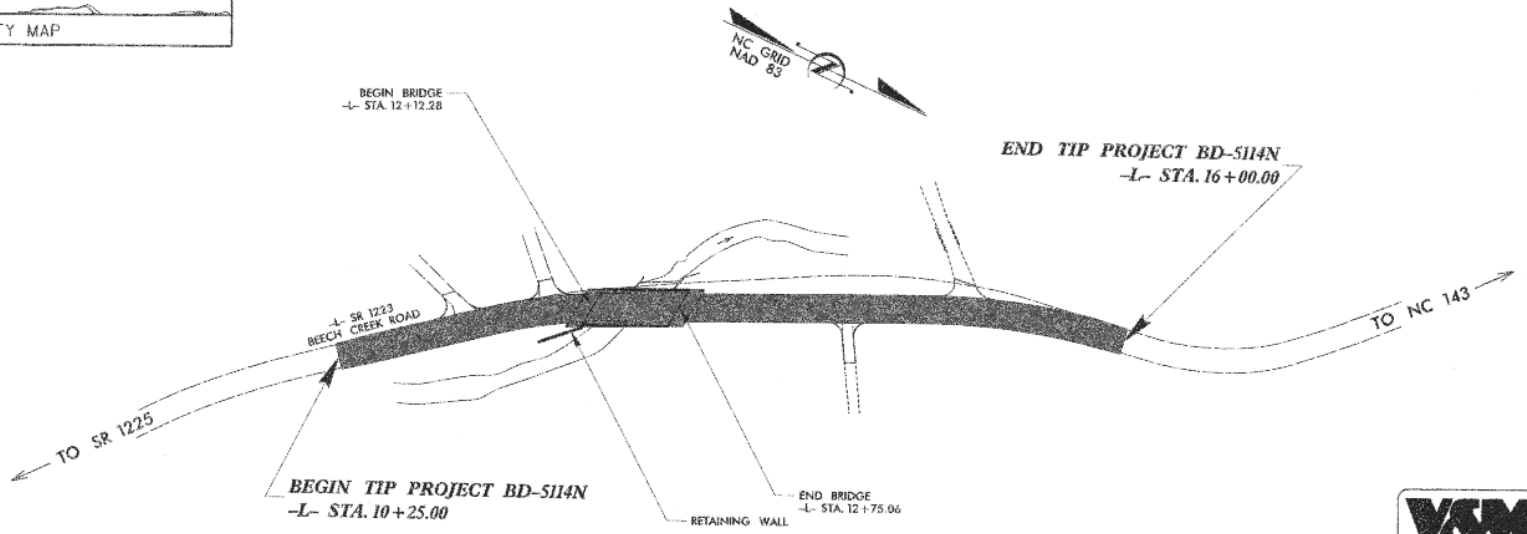

STRUCTURES

V&M Vaughn & Melton Consulting Engineers
Asheville, North Carolina 828-253-2796
Charlotte, North Carolina 704-357-0483
Tri-Cities, Tennessee 423-467-9401
Knoxville, Tennessee 865-545-5800
Middlesboro, Kentucky 606-246-5600
Spartanburg, South Carolina 864-574-4775

Copyright © 2006 Vaughn & Melton, Inc. All Rights Reserved

STATE OF NORTH CAROLINA DEPARTMENT OF TRANSPORTATION

DESIGN DATA

ADT 2008 = 550
ADT 2025 = 1100

T = 6 %
V = 40 MPH

FUNC CLASS = LOCAL

PROJECT LENGTH

LENGTH ROADWAY TIP PROJECT BD-5114N = 0.097 MI.
LENGTH STRUCTURE TIP PROJECT BD-5114N = 0.012 MI.
TOTAL LENGTH TIP PROJECT BD-5114N = 0.109 MI.

Prepared in the Office of:
VAUGHN & MELTON
1318-F PATTON AVE.
ASHEVILLE NC. 28806
FOR THE NORTH CAROLINA DIVISION OF HIGHWAYS

2012 STANDARD SPECIFICATIONS

LETTING DATE :
MAY 28, 2013

HARDY WILLIS, PE
PROJECT ENGINEER

AARON CARVER, PE
PROJECT DESIGN ENGINEER

STRUCTURES MANAGEMENT UNIT
1000 BIRCH RIDGE DR.
RALEIGH, N.C. 27610

DIVISION OF HIGHWAYS
STATE OF NORTH CAROLINA

JOSH DEYTON P.E.
STATE DESIGN ENGINEER

DEPARTMENT OF TRANSPORTATION
FEDERAL HIGHWAY ADMINISTRATION

APPROVED:
DIVISION ADMINISTRATOR DATE

FEDERAL AID NO. BRZ-1223(9)

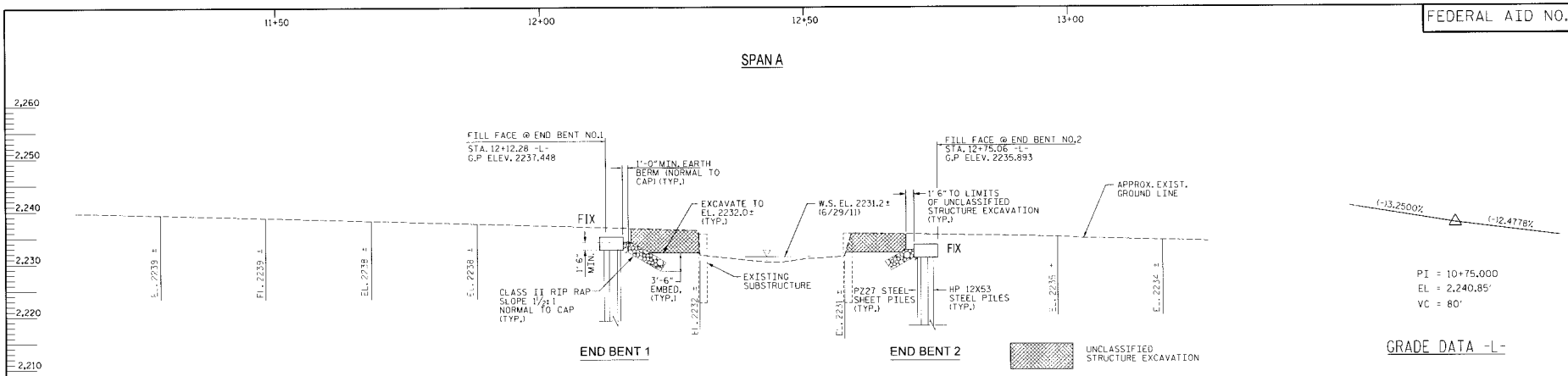

SECTION ALONG ℄ SURVEY -L-

SECTIONS AT END BENTS ARE AT RIGHT ANGLES.

THE APPROXIMATE NATURAL GROUND ELEVATIONS SHOWN ARE ALONG THE EDGE OF THE BRIDGE ON THE UPSTREAM SIDE.

PI = 10+75.000
EL = 2,240.85'
VC = 80'

GRADE DATA -L-

PI Sta 11+82.16
Δ = 13° 44' 53.4" (RT)
D = 15° 04' 40.2"
L = 91.18'
T = 45.81'
R = 380.00'

HORIZONTAL CURVE DATA -L-

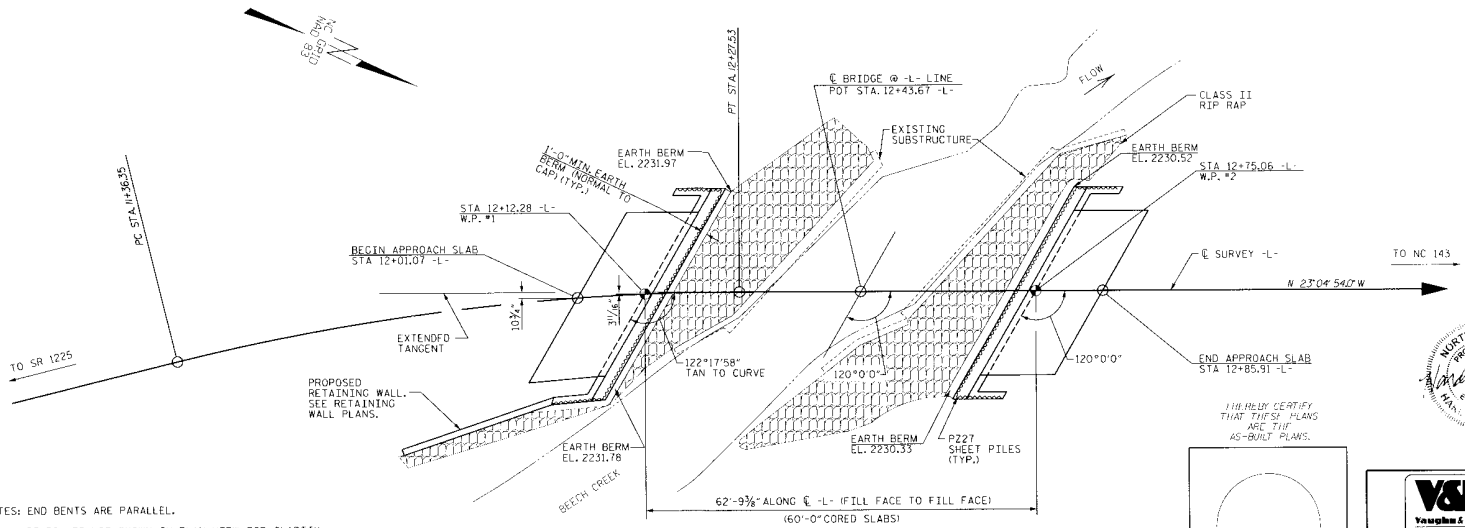

PLAN ALONG ℄ SURVEY -L-

NOTES: END BENTS ARE PARALLEL.
PILES ARE NOT SHOWN IN PLAN VIEW FOR CLARITY.
CORED SLABS ARE PARALLEL TO TANGENT PORTION OF CENTERLINE.

I HEREBY CERTIFY THAT THESE PLANS ARE THE AS-BUILT PLANS.

NORTH CAROLINA PROFESSIONAL SEAL ENGINEER

Vaughan & Melton Consulting Engineers

DRAWN BY: WA DATE: OCT 2012
CHECKED BY: HLW DATE: OCT 2012

PROJECT NO. BD-5114N
GRAHAM COUNTY
STATION: 12+43.67 -L-
SHEET 1 OF 3 REPLACES BRIDGE NO. 28

STATE OF NORTH CAROLINA
DEPARTMENT OF TRANSPORTATION
RALEIGH

GENERAL DRAWING
FOR BRIDGE on SR 1223 (BEECH CREEK RD.) over BEECH CREEK Between SR 1225 & NC143

REVISIONS						SHEET NO.
NO.	BY:	DATE:	NO.	BY:	DATE:	S-1
1			3			TOTAL SHEETS
2			4			21

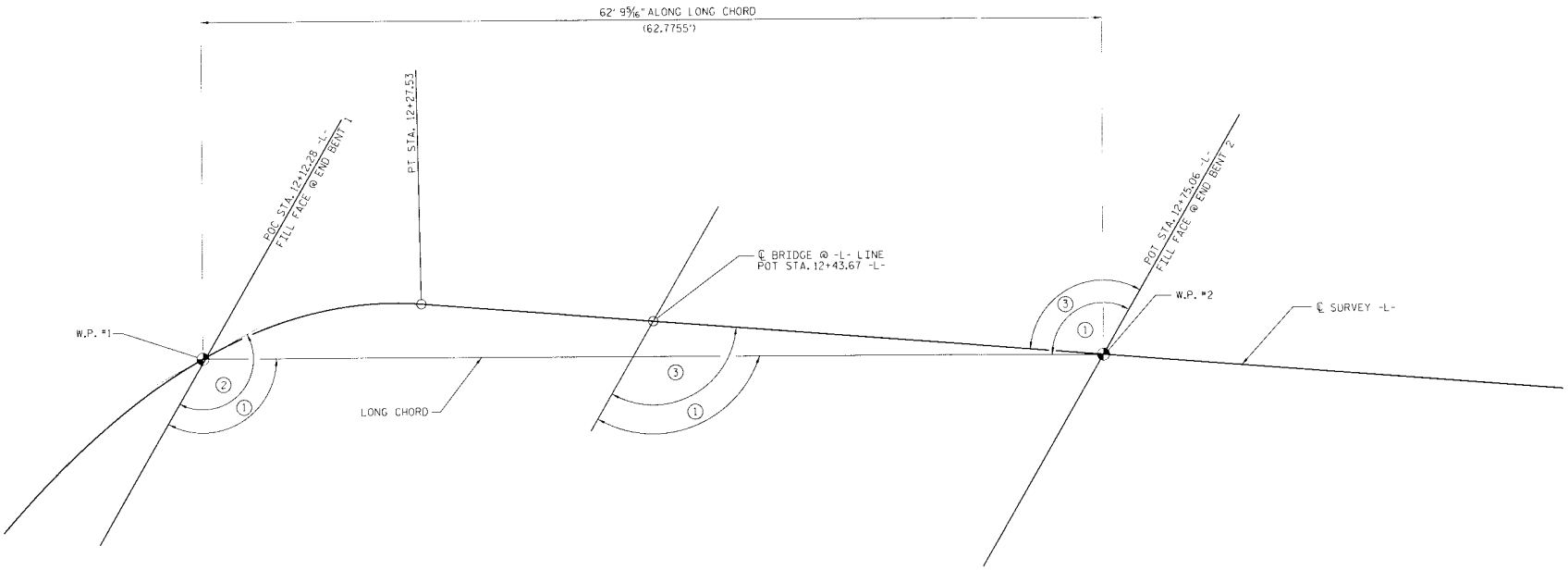

LONG CHORD LAYOUT
END BENTS ARE PARALLEL.

PI Sta 11+82.16
Δ = 13° 44' 53.4" (RT)
D = 15° 04' 40.2"
L = 91.18'
T = 45.81'
R = 380.00'

HORIZONTAL CURVE DATA -L-

1. 120°16'45" TO LONG CHORD
2. 122°17'58" TAN TO CURVE, ℄ SURVEY -L-
3. 120°00'00" TO ℄ SURVEY -L-

PROJECT NO. BD-5114N
GRAHAM COUNTY
STATION: 12+43.67 -L-
SHEET 2 OF 3

NORTH CAROLINA PROFESSIONAL ENGINEER RICHARDY L. WILLIS 12/17/12

STATE OF NORTH CAROLINA
DEPARTMENT OF TRANSPORTATION
RALEIGH

GENERAL DRAWING
FOR BRIDGE on SR 1223
(BEECH CREEK RD.)
over BEECH CREEK Between
SR 1225 & NC143

Vaughn & Melton Consulting Engineers
Middlesboro, Kentucky 606-248-6600
Knoxville, Tennessee 865-546-1600
Asheville, North Carolina 828-253-2796
Copyright © 2006 Vaughn & Melton, Inc. All Rights Reserved

DRAWN BY: MAF DATE: OCT 2012
CHECKED BY: RLW DATE: OCT 2012

REVISIONS						SHEET NO.
NO.	BY:	DATE:	NO.	BY:	DATE:	S-2
1			3			TOTAL SHEETS
2			4			21

BM #1 N 611642.7780 E 585321.2930 ELEV. = 2240.707 -L- STATION 11+01.71 30.50' LT

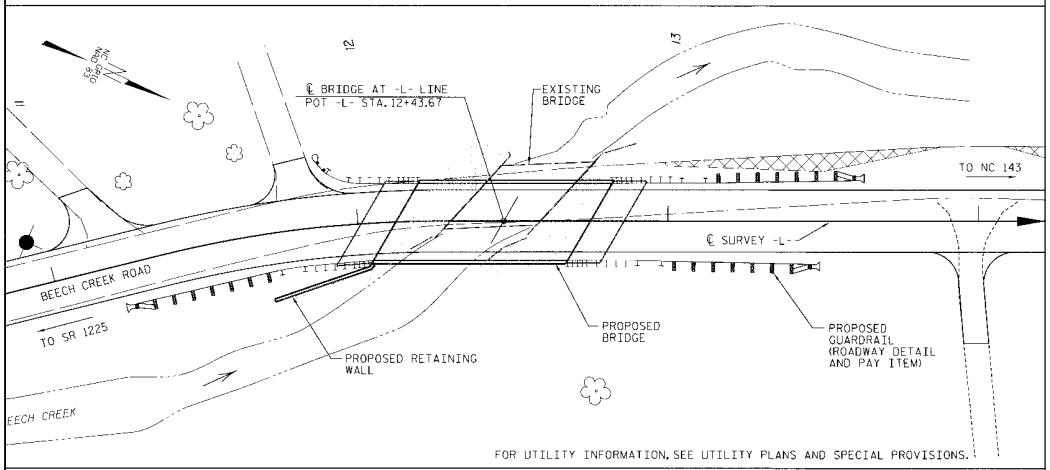

LOCATION SKETCH

GENERAL NOTES:

ASSUMED LIVE LOAD = HL-93 OR ALTERNATE LOADING.

THIS BRIDGE HAS BEEN DESIGNED IN ACCORDANCE WITH THE REQUIREMENTS OF THE AASHTO LRFD BRIDGE DESIGN SPECIFICATIONS.

THIS BRIDGE IS LOCATED IN SEISMIC ZONE 1.

FOR OTHER DESIGN DATA AND GENERAL NOTES, SEE "STANDARD NOTES" SHEET

FOR EROSION CONTROL MEASURES, SEE EROSION CONTROL PLANS.

THE EXISTING STRUCTURE, CONSISTING OF A ONE SPAN, 30.5-FOOT LONG TIMBER DECK ON STEEL I-BEAMS, 20-FEET WIDE, ON TIMBER CAP AND PILE END BENTS, AND LOCATED AT THE PROPOSED STRUCTURE, SHALL BE REMOVED. THE EXISTING BRIDGE IS PRESENTLY POSTED BELOW THE LEGAL LOAD LIMIT. SHOULD THE STRUCTURAL INTEGRITY OF THE BRIDGE FURTHER DETERIORATE, THIS LOAD LIMITATION MAY BE REDUCED AS FOUND NECESSARY DURING THE LIFE OF THE PROJECT.

REMOVAL OF THE EXISTING BRIDGE SHALL BE PERFORMED SO AS NOT TO ALLOW DEBRIS TO FALL INTO THE WATER. THE CONTRACTOR SHALL REMOVE THE BRIDGE AND SUBMIT PLANS FOR DEMOLITION IN ACCORDANCE WITH ARTICLE 402-2 OF THE STANDARD SPECIFICATIONS.

THE SUBSTRUCTURE OF THE EXISTING BRIDGE INDICATED ON THE PLANS IS FROM THE BEST INFORMATION AVAILABLE. SINCE THIS INFORMATION IS SHOWN FOR THE CONVENIENCE OF THE CONTRACTOR, THE CONTRACTOR SHALL HAVE NO CLAIM WHATSOEVER AGAINST THE DEPARTMENT OF TRANSPORTATION FOR ANY DELAYS OR ADDITIONAL COST INCURRED BASED ON DIFFERENCES BETWEEN THE EXISTING BRIDGE SUBSTRUCTURE SHOWN ON THE PLANS AND THE ACTUAL CONDITIONS AT THE PROJECT SITE.

THIS STRUCTURE HAS BEEN DESIGNED IN ACCORDANCE WITH "HEC 18-EVALUATING SCOUR AT BRIDGES."

FOR SUBMITTAL OF WORKING DRAWINGS, SEE SPECIAL PROVISIONS.

FOR FALSEWORK AND FORMWORK, SEE SPECIAL PROVISIONS.

FOR CRANE SAFETY, SEE SPECIAL PROVISIONS.

FOR GROUT FOR STRUCTURES, SEE SPECIAL PROVISIONS.

THE MATERIAL SHOWN IN THE CROSS-HATCHED AREA SHALL BE EXCAVATED FOR A DISTANCE OF 25 FT. EACH SIDE OF CENTERLINE ROADWAY AS DIRECTED BY THE ENGINEER. THIS WORK WILL BE PAID FOR AT THE CONTRACT LUMP SUM PRICE FOR UNCLASSIFIED STRUCTURE EXCAVATION. SEE SECTION 412 OF THE STANDARD SPECIFICATIONS.

ASPHALT WEARING SURFACE IS INCLUDED IN ROADWAY QUANTITY ON ROADWAY PLANS.

INASMUCH AS THE PAINT SYSTEM ON THE EXISTING STRUCTURAL STEEL CONTAINS LEAD, THE CONTRACTOR'S ATTENTION IS DIRECTED TO ARTICLE 107-1 OF THE STANDARD SPECIFICATIONS. ANY COSTS RESULTING FROM COMPLIANCE WITH APPLICABLE STATE OR FEDERAL REGULATIONS PERTAINING TO HANDLING OF MATERIALS CONTAINING LEAD BASED PAINT SHALL BE INCLUDED IN THE BID PRICE FOR "REMOVAL OF EXISTING STRUCTURE AT STATION 12+43.67."

THE CONTRACTOR SHALL PROVIDE INDEPENDENT ASSURANCE SAMPLES OF REINFORCING STEEL AS FOLLOWS: FOR PROJECTS REQUIRING UP TO 400 TONS OF REINFORCING STEEL, ONE 30 INCH SAMPLE OF EACH SIZE BAR USED, AND FOR PROJECTS REQUIRING OVER 400 TONS OF REINFORCING STEEL, TWO 30 INCH SAMPLES OF EACH SIZE BAR USED. THE BARS FROM WHICH THE SAMPLES ARE TAKEN MUST THEN BE SPLICED WITH REPLACEMENT BARS OF THE SIZE AND LENGTH OF THE SAMPLE, PLUS A MINIMUM LAP SPLICE OF THIRTY BAR DIAMETERS. PAYMENT FOR THE SAMPLES OF REINFORCING STEEL SHALL BE CONSIDERED INCIDENTAL TO VARIOUS PAY ITEMS.

FOR PILES, SEE SECTION 450 OF THE STANDARD SPECIFICATIONS.

PILES AT END BENT NO. 1 ARE DESIGNED FOR A FACTORED RESISTANCE OF 85 TONS PER PILE.

DRIVE PILES AT END BENT NO. 1 TO A REQUIRED DRIVING RESISTANCE OF 142 TONS PER PILE.

PILES AT END BENT NO. 2 ARE DESIGNED FOR A FACTORED RESISTANCE OF 85 TONS PER PILE.

DRIVE PILES AT END BENT NO. 2 TO A REQUIRED DRIVING RESISTANCE OF 142 TONS PER PILE.

IF NECESSARY, PREDRILL PILE LOCATIONS AT END BENT NO. 1 TO ELEVATION 2228.5 FT. WITH EQUIPMENT THAT WILL RESULT IN A MAXIMUM PREDRILLING DIAMETER OF 24" FOR PREDRILLING PILES, SEE SECTION 450 OF THE STANDARD SPECIFICATIONS.

IF NECESSARY, PREDRILL PILE LOCATIONS AT END BENT NO. 2 TO ELEVATION 2223.5 FT. WITH EQUIPMENT THAT WILL RESULT IN A MAXIMUM PREDRILLING DIAMETER OF 24" FOR PREDRILLING FOR PILES, SEE SECTION 450 OF THE STANDARD SPECIFICATIONS.

PZ-27 SHEET PILES SHALL BE DRIVEN STREAM SIDE OF THE BEARING PILES.

SHEET PILES SHALL BE INSTALLED TO AN ELEVATION OF 2224.0 FT. AT END BENT NO. 1 TO ACCOUNT FOR THE SCOUR IMPACT AT END BENT NO. 1.

SHEET PILES SHALL BE INSTALLED TO AN ELEVATION OF 2217.0 FT. AT END BENT NO. 2 TO ACCOUNT FOR THE SCOUR IMPACT AT END BENT NO. 2.

SHEET PILES FOR END BENTS AND RETAINING WALL ARE TO BE INSTALLED AT THE SAME TIME.

HYDRAULIC DATA

DESIGN DISCHARGE	= 850 CFS
DESIGN FREQUENCY	= 10 YRS
DESIGN HW ELEVATION	= 2235.49 FT
BASE DISCHARGE	= 1650 CFS
BASE FREQUENCY	= 100 YRS
BASE HW ELEVATION	= 2236.46 FT

OVERTOPPING FLOOD DATA

OVERTOPPING DISCHARGE	= 1400 CFS
OVERTOPPING FREQUENCY	= 50 (-) YRS
OVERTOPPING ELEVATION	= 2237.0 FT
DRAINAGE AREA	= 4.3 SQ. MI.

TOTAL BILL OF MATERIAL

	REMOVAL OF EXISTING STRUCTURE	UNCLASSIFIED STRUCTURE EXCAVATION	CLASS A CONCRETE	BRIDGE APPROACH SLABS	REINFORCING STEEL	HP 12 X 53 STEEL PILES		PREDRILLING FOR PILES	18" STEEL SHEET PILES	TEMPORARY SHORING	VERTICAL CONCRETE BARRIER RAIL	RIP RAP CLASS II (2'-0" THICK)	GEOTEXTILE FOR DRAINAGE	ELASTOMERIC BEARINGS	3'-0" x 2'-0" PRESTRESSED CONCRETE CORED SLAB UNIT	
	LUMP SUM	LUMP SUM	CU. YARDS	LUMP SUM	LBS.	NO.	LIN. FT.	LIN. FT.	SQ. FT.	SQ. FT.	LIN. FT.	TONS	SQ. YARDS	LUMP SUM	NO.	LIN. FT.
SUPERSTRUCTURE				LUMP SUM							120.29			LUMP SUM	9	540.0
END BENT 1		LUMP SUM	21.9		2,464	5	180	18.9	565	150		65	73			
END BENT 2		LUMP SUM	21.9		2,464	5	190	36.6	875	180		60	67			
TOTAL	LUMP SUM	LUMP SUM	43.8	LUMP SUM	4,928	10	370	55.5	1,440	330	120.29	125	140	LUMP SUM	9	540.0

NORTH CAROLINA PROFESSIONAL SEAL 032077 ENGINEER HARDY L. WILLIS 12/7/12

PROJECT NO. BD-5114N

GRAHAM COUNTY

STATION: 12+43.67 -L-

SHEET 3 OF 3

STATE OF NORTH CAROLINA
DEPARTMENT OF TRANSPORTATION
RALEIGH

GENERAL DRAWING

FOR BRIDGE on SR 1223 (BEECH CREEK RD.) over BEECH CREEK Between SR 1225 & NC143

Vaughn & Melton Consulting Engineers — Middlesboro, Kentucky; Knoxville, Tennessee; Asheville, North Carolina

Copyright © 2012 Vaughn & Melton, Inc. All Rights Reserved

DRAWN BY: MAF DATE: OCT 2012
CHECKED BY: H_W DATE: OCT 2012

REVISIONS						SHEET NO.
NO.	BY:	DATE:	NO.	BY:	DATE:	S-3
1			3			TOTAL SHEETS
2			4			21

NOTES

FOR TEMPORARY GUARDRAIL DETAILS AND PAY ITEM, SEE ROADWAY PLANS.

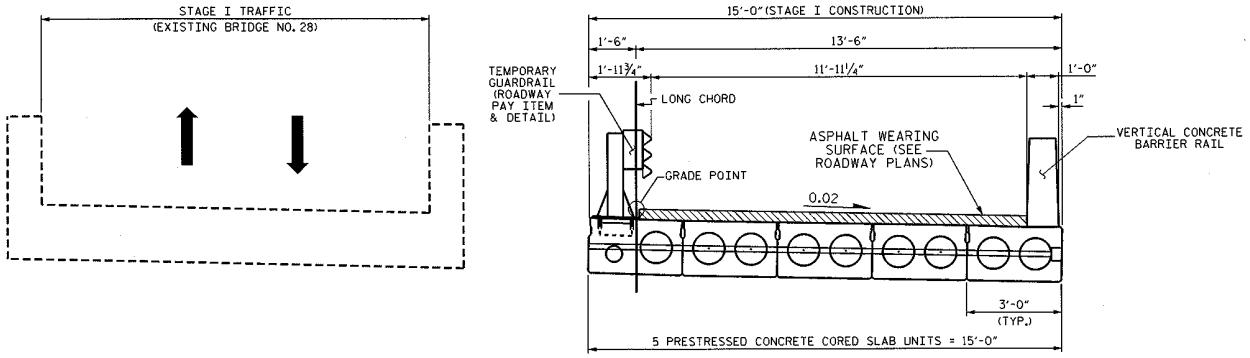

STAGE I

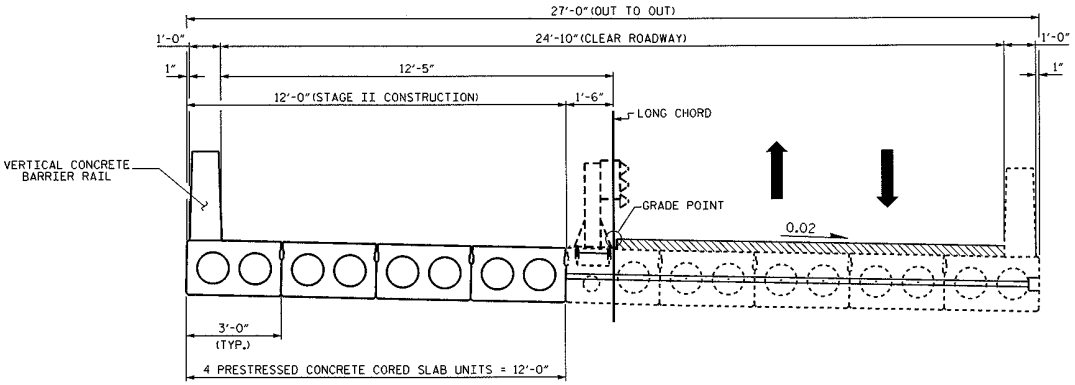

STAGE II

STAGING SEQUENCE

PROJECT NO. BD-5114N

GRAHAM COUNTY

STATION: 12+43.67 -L-

STATE OF NORTH CAROLINA
DEPARTMENT OF TRANSPORTATION
RALEIGH

CONSTRUCTION STAGING

NORTH CAROLINA PROFESSIONAL SEAL 15779 ENGINEER JOHN R. DUGGINS, JR.
5/9/12

REVISIONS						SHEET NO.
NO.	BY:	DATE:	NO.	BY:	DATE:	S-4
1			3			TOTAL SHEETS
2			4			21

DRAWN BY : B.MATHEW DATE : 01/2012
CHECKED BY : J.R. DUGGINS DATE : 04/12

08-MAY-2012 15:47
S:\DPG4\John\LIBR_Files\BD-5114N\Final_Plans\BD-5114N_SD_PC.dgn
jduggins

LOAD AND RESISTANCE FACTOR RATING (LRFD) SUMMARY FOR PRESTRESSED CONCRETE GIRDERS

LEVEL		VEHICLE	WEIGHT (W) (TONS)	CONTROLLING LOAD RATING	MINIMUM RATING FACTORS (RF)	TONS = W X RF	STRENGTH I LIMIT STATE											SERVICE III LIMIT STATE							COMMENT NUMBER
								MOMENT					SHEAR						MOMENT						
							LIVELOAD FACTORS	DISTRIBUTION FACTORS (DF)	RATING FACTOR	SPAN	GIRDER LOCATION	DISTANCE FROM LEFT END OF SPAN (ft)	DISTRIBUTION FACTORS (DF)	RATING FACTOR	SPAN	GIRDER LOCATION	DISTANCE FROM LEFT END OF SPAN (ft)	LIVELOAD FACTORS	DISTRIBUTION FACTORS (DF)	RATING FACTOR	SPAN	GIRDER LOCATION	DISTANCE FROM LEFT END OF SPAN (ft)	
DESIGN LOAD RATING		HL-93(Inv)	N/A	1	1.133	--	1.75	0.249	1.48	60'	EL	29.423	0.649	**1.13**	60'	EL	**5.885**	0.80	0.249	1.52	60'	EL	29.423	
		HL-93(Opr)	N/A	--	1.468	--	1.35	0.249	1.91	60'	EL	29.423	0.649	1.47	60'	EL	5.885	N/A	--	--	--	--	--	
		HS-20(Inv)	36.000	2	1.364	49.098	1.75	0.249	1.87	60'	EL	29.423	0.649	**1.36**	60'	EL	**5.885**	0.80	0.249	1.92	60'	EL	29.423	
		HS-20(Opr)	36.000	--	1.768	63.645	1.35	0.249	2.42	60'	EL	29.423	0.649	1.77	60'	EL	5.885	N/A	--	--	--	--	--	
LEGAL LOAD RATING	SV	SNSH	13.500	--	3.938	53.159	1.4	0.249	5.03	60'	EL	29.423	0.649	3.94	60'	EL	5.885	0.80	0.249	4.13	60'	EL	29.423	
		SNGARBS2	20.000	--	2.837	56.744	1.4	0.249	3.85	60'	EL	29.423	0.649	2.84	60'	EL	5.885	0.80	0.249	3.17	60'	EL	29.423	
		SNAGRIS2	22.000	--	2.648	58.256	1.4	0.249	3.69	60'	EL	29.423	0.649	2.65	60'	EL	5.885	0.80	0.249	3.03	60'	EL	29.423	
		SNCOTTS3	27.250	--	1.97	53.671	1.4	0.249	2.5	60'	EL	29.423	0.649	1.97	60'	EL	5.885	0.80	0.249	2.06	60'	EL	29.423	
		SNAGGRS4	34.925	--	1.661	58.001	1.4	0.249	2.13	60'	EL	29.423	0.649	1.66	60'	EL	5.885	0.80	0.249	1.75	60'	EL	29.423	
		SNS5A	35.550	--	1.696	60.293	1.4	0.249	2.08	60'	EL	29.423	0.649	1.7	60'	EL	5.885	0.80	0.249	1.71	60'	EL	29.423	
		SNS6A	39.950	--	1.558	62.257	1.4	0.249	1.93	60'	EL	29.423	0.649	1.56	60'	EL	5.885	0.80	0.249	1.58	60'	EL	29.423	
		SNS7B	42.000	--	1.51	63.41	1.4	0.249	1.84	60'	EL	29.423	0.649	1.55	60'	EL	5.885	0.80	0.249	1.51	60'	EL	29.423	
	TTST	TNAGRIT3	33.000	--	1.846	60.907	1.4	0.249	2.36	60'	EL	29.423	0.649	1.85	60'	EL	5.885	0.80	0.249	1.94	60'	EL	29.423	
		TNT4A	33.075	--	1.787	59.108	1.4	0.249	2.37	60'	EL	29.423	0.649	1.79	60'	EL	5.885	0.80	0.249	1.95	60'	EL	29.423	
		TNT6A	41.600	--	1.607	66.863	1.4	0.249	1.96	60'	EL	29.423	0.649	1.67	60'	EL	5.885	0.80	0.249	1.61	60'	EL	29.423	
		TNT7A	42.000	--	1.598	67.1	1.4	0.249	1.97	60'	EL	29.423	0.649	1.6	60'	EL	5.885	0.80	0.249	1.62	60'	EL	29.423	
		TNT7B	42.000	--	1.499	62.942	1.4	0.249	2.06	60'	EL	29.423	0.649	1.5	60'	EL	5.885	0.80	0.249	1.69	60'	EL	29.423	
		TNAGRIT4	43.000	--	1.447	62.223	1.4	0.249	1.95	60'	EL	29.423	0.649	1.45	60'	EL	5.885	0.80	0.249	1.60	60'	EL	29.423	
		TNAGT5A	45.000	--	1.455	65.474	1.4	0.249	1.83	60'	EL	29.423	0.649	1.45	60'	EL	5.885	0.80	0.249	1.50	60'	EL	29.423	
		TNAGT5B	45.000	3	1.374	61.845	1.4	0.249	1.8	60'	EL	29.423	0.649	**1.37**	60'	EL	**5.885**	0.80	0.249	1.48	60'	EL	29.423	

LOAD FACTORS:

DESIGN LOAD RATING FACTORS	LIMIT STATE	γ_{DC}	γ_{DW}
	STRENGTH I	1.25	1.50
	SERVICE III	1.00	1.00

NOTES:

MINIMUM RATING FACTORS ARE BASED ON THE STRENGTH I AND SERVICE III LIMIT STATES.

ALLOWABLE STRESSES FOR SERVICE III LIMIT STATE ARE AS REQUIRED FOR DESIGN.

COMMENTS:

1.
2.
3.
4.

(#) CONTROLLING LOAD RATING

(1) DESIGN LOAD RATING (HL-93)

(2) DESIGN LOAD RATING (HS-20)

(3) LEGAL LOAD RATING **

** SEE CHART FOR VEHICLE TYPE

GIRDER LOCATION

I - INTERIOR GIRDER
EL - EXTERIOR LEFT GIRDER
ER - EXTERIOR RIGHT GIRDER

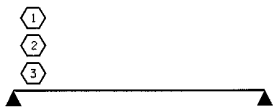

LRFR SUMMARY
FOR SPAN 'A'

PROJECT NO. BD-5114N
GRAHAM COUNTY
STATION: 12+43.67 -L-

STATE OF NORTH CAROLINA
DEPARTMENT OF TRANSPORTATION
RALEIGH

STANDARD
LRFR SUMMARY FOR 60' CORED SLAB UNIT 120° SKEW
(NON-INTERSTATE TRAFFIC)

NORTH CAROLINA PROFESSIONAL SEAL 15779 ENGINEER JOHN R. DUGGINS
5/9/12

REVISIONS						SHEET NO.
NO.	BY:	DATE:	NO.	BY:	DATE:	S-5
1			3			TOTAL SHEETS
2			4			21

ASSEMBLED BY : V.K. NGUYEN	DATE : 1-10-12	
CHECKED BY : J.R. DUGGINS	DATE : 4-12	
DRAWN BY : CVC 6/10		
CHECKED BY : DNS 6/10		

08-MAY-2012 15:46
S:\DPG4\John\LIBR_Files\BD-5114N\Final_Plans\BD5114N_SD_LRFR.dgn
jduggins

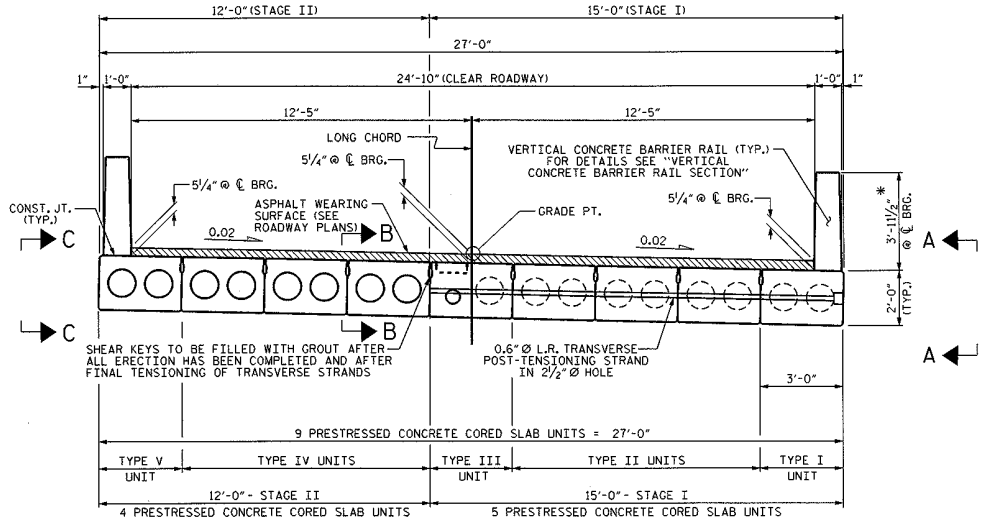

HALF SECTION AT INTERMEDIATE DIAPHRAGMS

HALF SECTION THROUGH VOIDS

TYPICAL SECTION

* - THE MAXIMUM BARRIER RAIL HEIGHT AND ASPHALT THICKNESS IS SHOWN. THE HEIGHT OF THE BARRIER RAIL AND ASPHALT THICKNESS VARIES WHILE THE TOP OF THE BARRIER RAIL FOLLOWS THE PROFILE OF THE GUTTERLINE. FOR RAIL HEIGHT DETAILS AND ASPHALT THICKNESS, SEE THE "VERTICAL CONCRETE BARRIER RAIL SECTION" DETAIL.

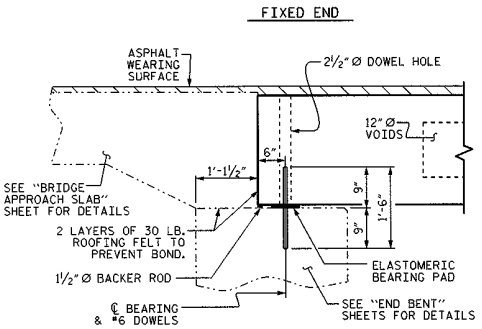

SECTION AT END BENT

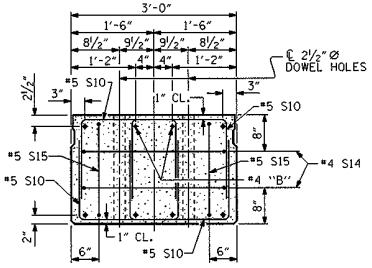

END ELEVATION

SHOWING PLACEMENT OF DOUBLE STIRRUPS AND LOCATION OF DOWEL HOLES. (STRAND LAYOUT NOT SHOWN.) INTERIOR SLAB UNIT SHOWN-EXTERIOR SLAB UNIT SIMILAR EXCEPT SHEAR KEY LOCATION.

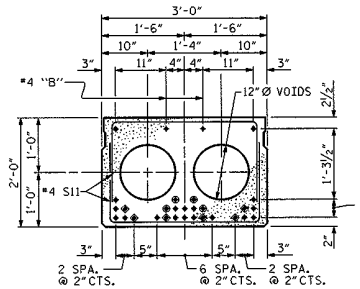

INTERIOR SLAB SECTION (60' UNIT)

TYPE II & IV (24 STRANDS REQUIRED)

0.6" Ø LOW RELAXATION STRAND LAYOUT

◈ BOND SHALL BE BROKEN ON THESE STRANDS FOR A DISTANCE OF 12'-0" FROM END OF CORED SLAB UNIT. SEE STANDARD SPECIFICATIONS, ARTICLE 1078-7.

◉ OPTIONAL FULL LENGTH DEBONDED STRANDS. THESE STRANDS ARE NOT REQUIRED. IF THE FABRICATOR CHOOSES TO INCLUDE THESE STRANDS IN THE CORED SLAB UNIT, THE STRANDS SHALL BE DEBONDED FOR THE FULL LENGTH OF THE UNIT AT NO ADDITIONAL COST. SEE STANDARD SPECIFICATIONS, ARTICLE 1078-7.

DEBONDING LEGEND

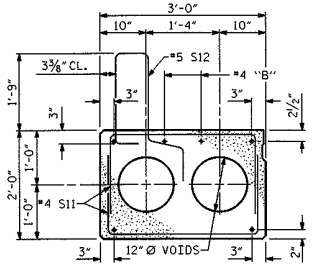

EXTERIOR SLAB SECTION

TYPE I & V
(FOR PRESTRESSED STRAND LAYOUT, SEE INTERIOR SLAB SECTION TYPE II & IV)

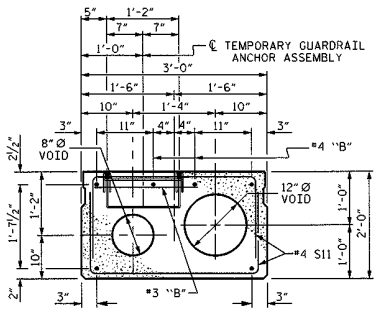

INTERIOR SLAB SECTION

TYPE III
(FOR PRESTRESSED STRAND LAYOUT, SEE "INTERIOR SLAB SECTION - TYPE II & IV")

FOR TEMPORARY GUARDRAIL ANCHOR ASSEMBLY LOCATION, SEE SECTION OF ANCHOR ASSEMBLY LOCATION ON "ANCHORAGE DETAILS FOR TEMPORARY GUARDRAIL ANCHOR ASSEMBLY FOR TYPE III CORED SLAB UNIT" SHEET.

PROJECT NO. BD-5114N

GRAHAM COUNTY

STATION: 12+43.67 -L-

SHEET 1 OF 5

STATE OF NORTH CAROLINA
DEPARTMENT OF TRANSPORTATION
RALEIGH

STANDARD

3'-0" X 2'-0" PRESTRESSED CONCRETE CORED SLAB UNIT

REVISIONS						SHEET NO.
NO.	BY:	DATE:	NO.	BY:	DATE:	S-6
1			3			TOTAL SHEETS
2			4			21

NORTH CAROLINA PROFESSIONAL SEAL 15779 ENGINEER JOHN R. DUGGINS JR.

5/9/12

ASSEMBLED BY : B.MATHEW	DATE : 01/2012		
CHECKED BY : J.R. DUGGINS	DATE : 04/2012		
DRAWN BY : MAA 6/10	REV. 12/11	MAA/AAC	
CHECKED BY : MKT 7/10			

08-MAY-2012 15:49
S:\DOT41\John\LIBR_Files\BD-5114N\Final_Plans\BD5114N_SD_CS.dgn
jduggins

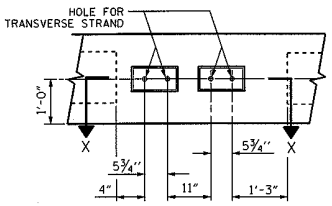

VIEW A-A

SEE SHEET 1 OF 5

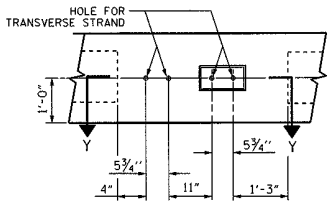

VIEW B-B

SEE SHEET 1 OF 5

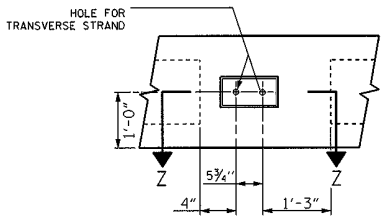

VIEW C-C

SEE SHEET 1 OF 5

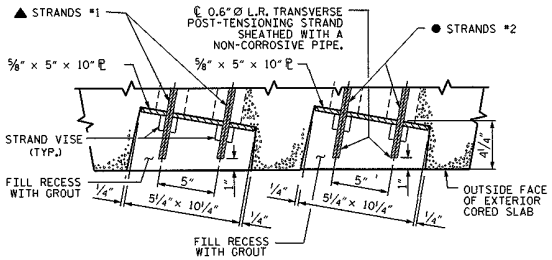

SECTION X-X

(TYPE I UNIT)

UP STATION

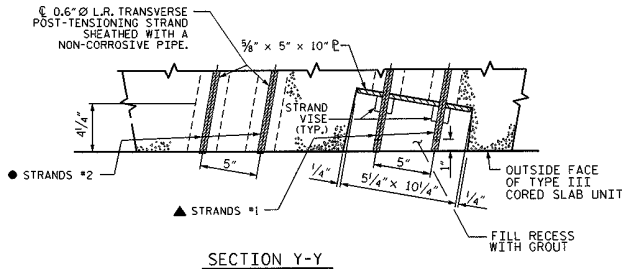

SECTION Y-Y

(TYPE III UNIT)

UP STATION

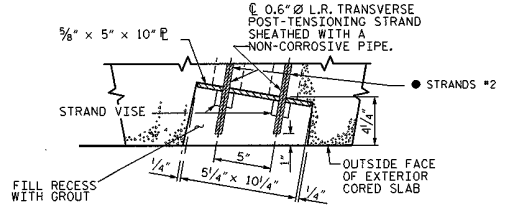

SECTION Z-Z

(TYPE V UNIT)

UP STATION

GROUTED RECESS AT END OF POST-TENSIONED STRAND

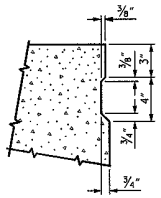

SHEAR KEY DETAIL

NOTE: OMIT SHEAR KEY ON OUTSIDE FACE OF EXTERIOR CORED SLABS.

▲ STRANDS *1 GOES THRU 5 CORED SLAB UNITS (TO BE TENSIONED DURING STAGE I CONSTRUCTION)

● STRANDS *2 GOES THRU ALL 9 CORED SLAB UNITS (TO BE TENSIONED DURING STAGE II CONSTRUCTION)

PROJECT NO. BD-5114N

GRAHAM COUNTY

STATION: 12+43.67

SHEET 2 OF 5

STATE OF NORTH CAROLINA
DEPARTMENT OF TRANSPORTATION
RALEIGH

SUPERSTRUCTURE

3'-0" X 1'-9"
PRESTRESSED CONCRETE
CORED SLAB UNIT

NORTH CAROLINA PROFESSIONAL SEAL 15779 ENGINEER JOHN R. DUGGINS

5/9/12

REVISIONS						SHEET NO.
NO.	BY:	DATE:	NO.	BY:	DATE:	S-7
1			3			TOTAL SHEETS
2			4			21

DRAWN BY : B.MATHEW DATE : 01/12

CHECKED BY : J.R. DUGGINS DATE : 04/12

08-MAY-2012 15:44
S:\DPG4\John\LIBR.Files\BD-5114N\Final.Plans\BD5114N_SD_CS.dgn
jduggins

PLAN OF UNIT

(STAGE I)

DETAIL "B"

#4 S11 BARS MAY BE SHIFTED AS NECESSARY TO MAINTAIN 1" CLEAR TO GROUTED RECESS AND 2½"Ø TRANSVERSE POST-TENSIONING STRAND HOLES.

DETAIL "A"

NOTE: EXTERIOR UNIT SHOWN - INTERIOR UNIT SIMILAR EXCEPT OMIT #5 S12 BARS.

NORTH CAROLINA PROFESSIONAL ENGINEER SEAL 15779 JOHN R. DUGGINS, JR. 11/7/12

PROJECT NO. BD-5114N

GRAHAM COUNTY

STATION: 12+43.67 -L-

SHEET 3 OF 5

STATE OF NORTH CAROLINA
DEPARTMENT OF TRANSPORTATION
RALEIGH

PLAN OF 60' UNIT
24'-10" CLEAR ROADWAY
120° SKEW
(STAGE I)

REVISIONS								SHEET NO.
NO.	BY:	DATE:	NO.	BY:	DATE:			S-8
1			3					TOTAL SHEETS
2			4					21

ASSEMBLED BY : BMATHEW	DATE : 01/2012	
CHECKED BY : J.R. DUGGINS	DATE : 4-12	
DRAWN BY : MAA 6/10	REV. 12/5/11	MAA/AAC
CHECKED BY : MKT 7/10		

07-NOV-2012 10:26
S:\DPG4\John\LIBR_Files\BD-5114N\Final_Plans\BD5114N_SD_CS.dgn
jduggins

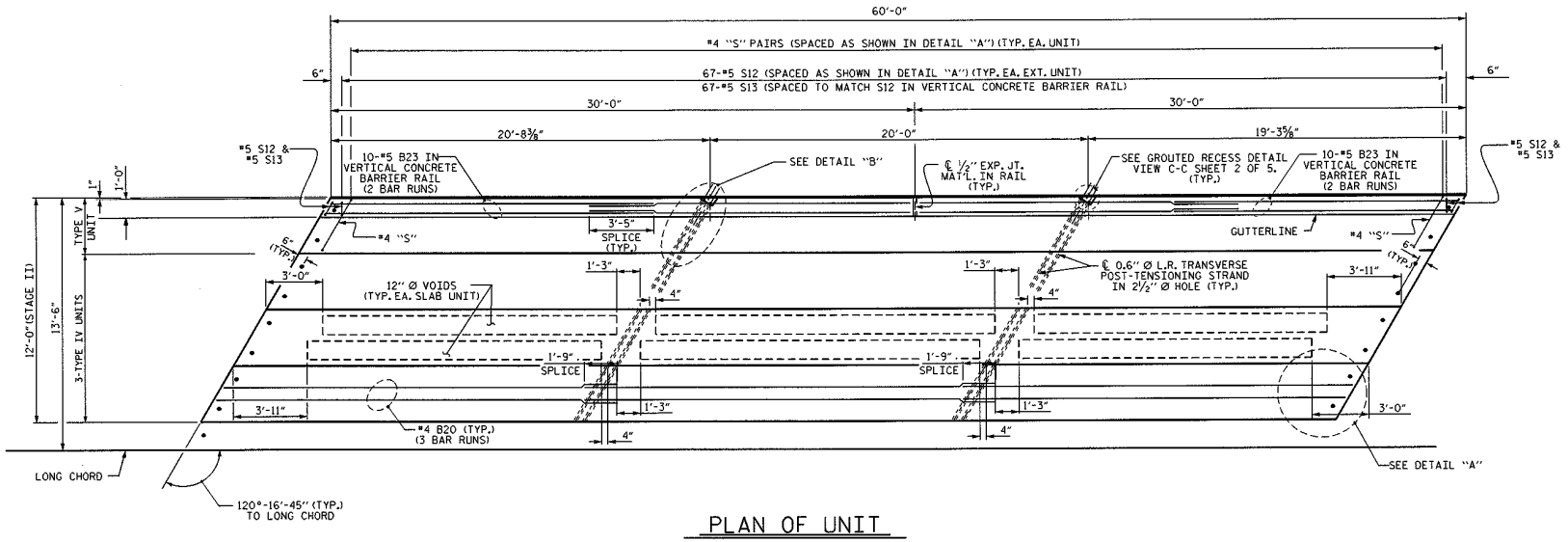

PLAN OF UNIT
(STAGE II)

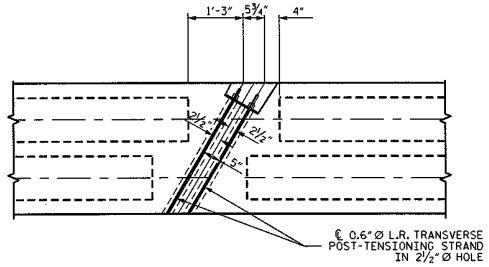

DETAIL "B"
#4 S11 BARS MAY BE SHIFTED AS NECESSARY TO MAINTAIN 1" CLEAR TO GROUTED RECESS AND 2½"Ø TRANSVERSE POST-TENSIONING STRAND HOLES.

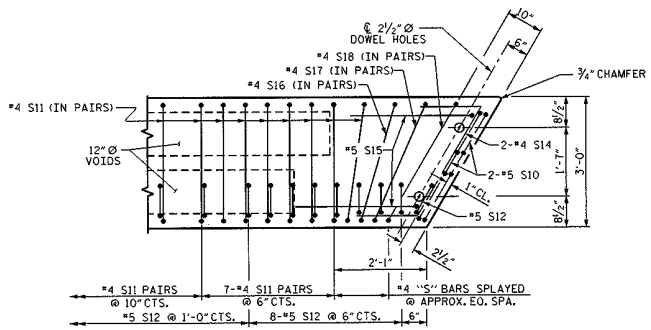

DETAIL "A"
NOTE: EXTERIOR UNIT SHOWN - INTERIOR UNIT SIMILAR EXCEPT OMIT #5 S12 BARS.

PROJECT NO. BD-5114N
GRAHAM COUNTY
STATION: 12+43.67 -L-

SHEET 4 OF 5

STATE OF NORTH CAROLINA
DEPARTMENT OF TRANSPORTATION
RALEIGH

PLAN OF 60' UNIT
24'-10" CLEAR ROADWAY
120° SKEW
STAGE II

NORTH CAROLINA PROFESSIONAL SEAL 15779 ENGINEER JOHN R. DUGGINS, JR.
5/9/12

REVISIONS						SHEET NO.
NO.	BY:	DATE:	NO.	BY:	DATE:	S-9
1			3			TOTAL SHEETS
2			4			21

ASSEMBLED BY :	BMATHEW	DATE :	01/2012
CHECKED BY :	J.R. DUGGINS	DATE :	4-12
DRAWN BY : MAA 6/10	REV. 12/5/11	MAA/AAC	
CHECKED BY : MKT 7/10			

08-MAY-2012 15:43
S:\DP04\John\LIBR_Files\BD-5114N\Final_Plans\BD5114N_SD_CS.dgn
jduggins

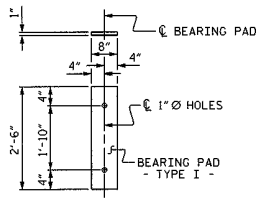

FIXED END
(TYPE I - 18 REQ'D)

ELASTOMERIC BEARING DETAILS

ELASTOMER IN ALL BEARINGS SHALL BE 60 DUROMETER HARDNESS.

GRADE 270 STRANDS	
	0.6"Ø L.R.
AREA (SQUARE INCHES)	0.217
ULTIMATE STRENGTH (LBS. PER STRAND)	58,600
APPLIED PRESTRESS (LBS. PER STRAND)	43,950

CORED SLABS REQUIRED			
	NUMBER	LENGTH	TOTAL LENGTH
60' UNIT			
EXTERIOR C.S.	2	60'-0"	120'-0"
INTERIOR C.S.	7	60'-0"	420'-0"
TOTAL	9		540'-0"

DEAD LOAD DEFLECTION AND CAMBER	
	3'-0" x 2'-0"
60' & 65' CORED SLAB UNIT	0.6"Ø L.R. STRAND
CAMBER (SLAB ALONE IN PLACE)	3⅜" ↑
DEFLECTION DUE TO SUPERIMPOSED DEAD LOAD**	½" ↓
FINAL CAMBER	2⅞" ↑

** INCLUDES FUTURE WEARING SURFACE

BAR TYPES

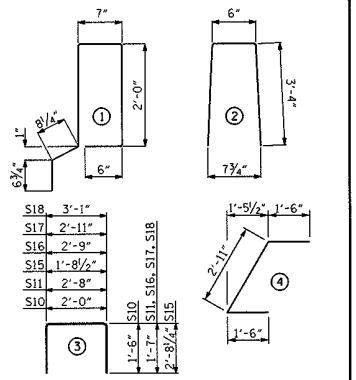

ALL BAR DIMENSIONS ARE OUT TO OUT

NOTES

ALL PRESTRESSING STRANDS SHALL BE 7-WIRE LOW RELAXATION GRADE 270 STRANDS AND SHALL CONFORM TO AASHTO M203 EXCEPT FOR SAMPLING REQUIREMENTS WHICH SHALL BE IN ACCORDANCE WITH THE STANDARD SPECIFICATIONS.

ALL REINFORCING STEEL CAST WITH THE CORED SLAB SECTIONS SHALL BE GRADE 60 AND SHALL BE INCLUDED IN THE UNIT PRICE BID FOR PRESTRESSED CONCRETE CORED SLABS.

RECESSES FOR TRANSVERSE STRANDS SHALL BE GROUTED AFTER THE TENSIONING OF THE STRANDS.

THE 2½"Ø DOWEL HOLES AT FIXED ENDS OF SLAB SECTIONS SHALL BE FILLED WITH NON-SHRINK GROUT.

THE BACKER RODS SHALL CONFORM TO THE REQUIREMENTS OF TYPE M BOND BREAKER. SEE SECTION 1028 OF THE STANDARD SPECIFICATIONS.

WHEN CORED SLABS ARE CAST, AN INTERNAL HOLD-DOWN SYSTEM SHALL BE EMPLOYED TO PREVENT VOIDS FROM RISING OR MOVING SIDEWAYS. AT LEAST SIX WEEKS PRIOR TO CASTING CORED SLABS, THE CONTRACTOR SHALL SUBMIT TO THE ENGINEER FOR REVIEW AND COMMENT, DETAILED DRAWINGS OF THE PROPOSED HOLD-DOWN SYSTEM. IN ADDITION TO STRUCTURAL DETAILS, LOCATION AND SPACING OF THE HOLD-DOWNS SHALL BE INDICATED.

THE TRANSFER OF LOAD FROM THE ANCHORAGES TO THE CORED SLAB UNIT SHALL BE DONE WHEN THE CONCRETE HAS REACHED A COMPRESSIVE STRENGTH OF NOT LESS THAN THE REQUIRED STRENGTH SHOWN IN THE "CONCRETE RELEASE STRENGTH" TABLE.

ALL REINFORCING STEEL IN VERTICAL CONCRETE BARRIER RAILS SHALL BE EPOXY COATED.

PRESTRESSING STRANDS SHALL BE CUT FLUSH WITH THE CORED SLAB UNIT ENDS.

APPLY EPOXY PROTECTIVE COATING TO CORED SLAB UNIT ENDS.

GROOVED CONTRACTION JOINTS, ½" IN DEPTH, SHALL BE TOOLED IN ALL EXPOSED FACES OF THE BARRIER RAIL AND IN ACCORDANCE WITH ARTICLE 825-10(B) OF THE STANDARD SPECIFICATIONS. A CONTRACTION JOINT SHALL BE LOCATED AT EACH THIRD POINT BETWEEN BARRIER RAIL EXPANSION JOINTS. ONLY ONE CONTRACTION JOINT IS REQUIRED AT MIDPOINT OF BARRIER RAIL SEGMENTS LESS THAN 20 FEET IN LENGTH AND NO CONTRACTION JOINTS ARE REQUIRED FOR THOSE SEGMENTS LESS THAN 10 FEET IN LENGTH.

TRANSVERSE POST TENSIONING OF THE CORED SLAB UNITS SHALL BE DONE IN ACCORDANCE WITH THE STANDARD SPECIFICATIONS.

MAINTAIN A SYMMETRIC TENSION FORCE BETWEEN EACH PAIR OF TRANSVERSE POST TENSIONING STRANDS IN THE DIAPHRAGM.

THE #4 S11 STIRRUPS MAY BE SHIFTED AS NECESSARY TO MAINTAIN 1" CLEAR TO THE GROUTED RECESS.

FOR GROUT FOR STRUCTURES, SEE SPECIAL PROVISIONS.

BILL OF MATERIAL FOR VERTICAL CONCRETE BARRIER RAIL						
BAR	BARS PER PAIR OF EXTERIOR UNITS	TOTAL NO.	SIZE	TYPE	LENGTH	WEIGHT
	60' UNIT					
*B23	80	80	#5	STR	16'-11"	1412
*S13	138	138	#5	2	7'-2"	1032
*EPOXY COATED REINFORCING STEEL				LBS.		2444
CLASS AA CONCRETE				CU.YDS.		16.2
TOTAL VERTICAL CONCRETE BARRIER RAIL				LN. FT.		120.29

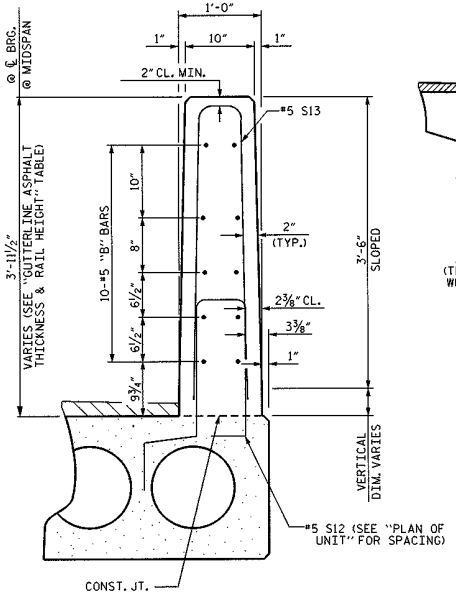

SECTION THRU RAIL

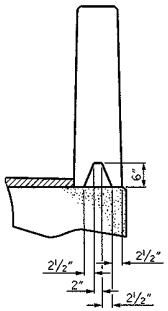

SECTION S-S
AT DAM IN OPEN JOINT
(THIS IS TO BE USED ONLY WHEN SLIP FORM IS USED)

℄ ½" EXP. JT. MAT'L HELD IN PLACE WITH GALVANIZED NAILS. (NOTE: OMIT EXP. JT. MAT'L. WHEN SLIP FORM IS USED.)

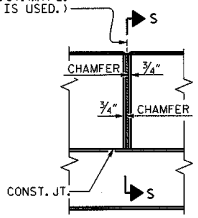

ELEVATION AT EXPANSION JOINTS

BILL OF MATERIAL FOR ONE 60' CORED SLAB UNIT							
				EXTERIOR UNIT		INTERIOR UNIT	
BAR	NUMBER	SIZE	TYPE	LENGTH	WEIGHT	LENGTH	WEIGHT
B20	6	#4	STR	21'-2"	85	21'-2"	85
S10	8	#5	3	5'-0"	42	5'-0"	42
S11	146	#4	3	5'-10"	569	5'-10"	569
*S12	69	#5	1	6'-4"	456		
S14	4	#4	4	5'-11"	16	5'-11"	16
S15	4	#5	3	7'-1"	30	7'-1"	30
S16	4	#4	3	5'-11"	16	5'-11"	16
S17	4	#4	3	6'-1"	16	6'-1"	16
S18	4	#4	3	6'-3"	17	6'-3"	17
REINFORCING STEEL			LBS.		791		791
*EPOXY COATED REINFORCING STEEL			LBS.		456		
6000 P.S.I. CONCRETE			CU. YDS.		10.4		10.4
0.6"Ø L.R. STRANDS			No.		24		24

CONCRETE RELEASE STRENGTH	
UNIT	PSI
60' UNITS	4800

GUTTERLINE ASPHALT THICKNESS & RAIL HEIGHT		
	ASPHALT OVERLAY THICKNESS @ MID-SPAN	RAIL HEIGHT @ MID-SPAN
60' UNITS	2⅜"	3'-8⅝"

VERTICAL CONCRETE BARRIER RAIL DETAILS

PROJECT NO. BD-5114N
GRAHAM COUNTY
STATION: 12+43.67 -L-

SHEET 5 OF 5

STATE OF NORTH CAROLINA
DEPARTMENT OF TRANSPORTATION
RALEIGH
STANDARD
3'-0" X 2'-0"
PRESTRESSED CONCRETE
CORED SLAB UNIT

NORTH CAROLINA PROFESSIONAL SEAL 15779 ENGINEER JOHN R. DUGGINS JR.
5/9/12

REVISIONS						SHEET NO.
NO.	BY:	DATE:	NO.	BY:	DATE:	S-10
1			3			TOTAL SHEETS
2			4			21

ASSEMBLED BY : V.X. NGUYEN DATE : 1-5-12
CHECKED BY : J.R. DUGGINS DATE : 4-12
DRAWN BY : MAA 6/10
CHECKED BY : MKT 7/10
REV. 12/11 MAA/AAC

08-MAY-2012 15:43
S:\DPG4\John\LIBR_Files\BD-5114N\Final_Plans\BD5114N_SD_CS.dgn
jduggins

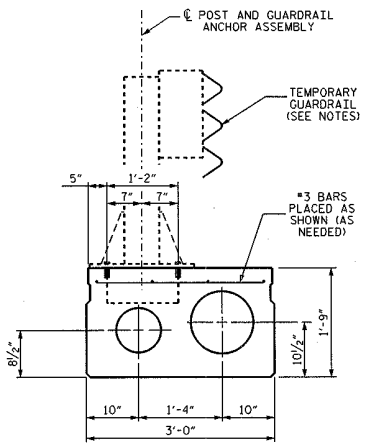

SECTION OF ANCHOR ASSEMBLY LOCATION

(TYPE III UNIT OF STAGE I)
THE #3 BARS ARE INCIDENTAL AND THEIR COST SHALL BE INCLUDED IN THE PRICE BID FOR THE PRESTRESSED CONCRETE CORED SLABS.

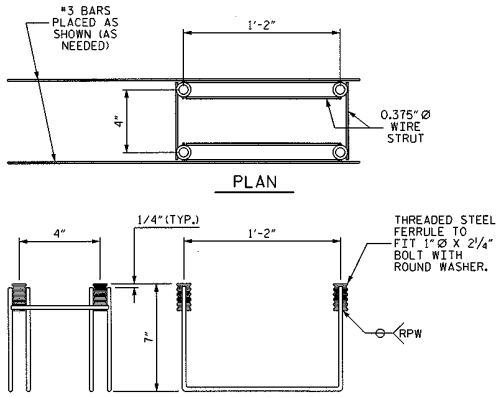

MINIMUM LENGTH OF THREADS IN INSERT (FERRULE) : 2½"

TEMPORARY GUARDRAIL ANCHOR ASSEMBLY

(12 ASSEMBLIES REQUIRED IN THE TYPE III CORED SLAB UNITS)
(6 ASSEMBLIES REQUIRED IN THE APPROACH SLABS)

NOTES

THE TEMPORARY GUARDRAIL ANCHOR ASSEMBLY SHALL CONSIST OF THE FOLLOWING COMPONENTS:

A. A. FERRULES SHALL BE MADE FROM STEEL MEETING THE REQUIREMENTS OF AASHTO M169, GRADE 12L14 AND SHALL HAVE A MINIMUM LENGTH OF THREADS OF 2½".

B. 4 - 1" Ø X 2¼" BOLTS WITH WASHERS. BOLTS SHALL CONFORM TO THE REQUIREMENTS OF ASTM A307. BOLTS AND WASHERS SHALL BE GALVANIZED. (AT THE CONTRACTOR'S OPTION, STAINLESS STEEL BOLTS AND WASHERS MAY BE USED AS AN ALTERNATE FOR THE 1" Ø X 2¼" GALVANIZED BOLTS AND WASHERS. THEY SHALL CONFORM TO OR EXCEED THE MECHANICAL REQUIREMENTS OF ASTM A307. THE USE OF THIS ALTERNATE SHALL BE APPROVED BY THE ENGINEER.

C. WIRE STRUTS SHOWN IN THE TEMPORARY GUARDRAIL ANCHOR ASSEMBLY DETAIL ARE THE MINIMUM ALLOWABLE SIZE AND SHALL HAVE A MINIMUM TENSILE STRENGTH OF 100,000 PSI.

TEMPORARY GUARDRAIL ANCHOR ASSEMBLY WITH BOLTS SHALL BE ASSEMBLED IN THE SHOP. BOLT THREADS MAY BE RECUT AS NECESSARY TO INSURE FIT.

THE COST OF THE TEMORARY GUARDRAIL ANCHOR ASSEMBLY COMPLETE IN PLACE, SHALL BE INCLUDED, AS APPLICABLE, IN THE UNIT CONTRACT PRICE BID FOR 3'-0"X 1'-9" PRESTRESSED CONCRETE CORED SLAB OR LUMP SUMP PRICE BID FOR APPROACH SLABS.

FERRULES TO BE PLUGGED DURING CASTING OF THE CORED SLAB UNITS OR POURING OF APPROACH SLAB AS RECOMMENDED BY THE MANUFACTURER.

AT THE CONTRACTOR'S OPTION, FERRULES WITH OPEN OR CLOSED ENDS MAY BE USED.

PAYMENT FOR TEMPORARY GUARDRAIL, POST, AND POST BASE PLATES IS INCLUDED IN ROADWAY PAY ITEMS.

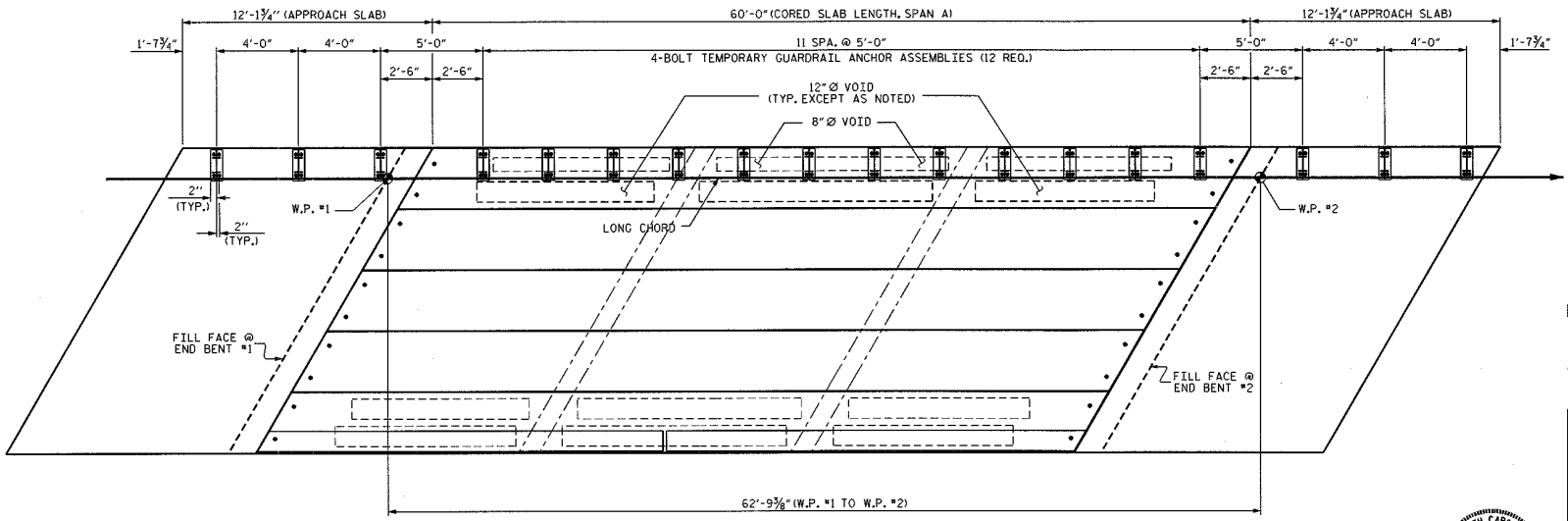

RAIL POST SPACING FOR TEMPORARY GUARDRAIL - STAGE I

PROJECT NO. BD-5114N
GRAHAM COUNTY
STATION: 12+43.67 -L-

STATE OF NORTH CAROLINA
DEPARTMENT OF TRANSPORTATION
RALEIGH

ANCHORAGE DETAILS FOR TEMPORARY GUARDRAIL ANCHOR ASSEMBLY FOR TYPE III CORED SLAB UNIT STAGE I

NORTH CAROLINA PROFESSIONAL SEAL 15779 ENGINEER JOHN R. DUGGINS, JR.
11/7/12

REVISIONS						SHEET NO.
NO.	BY:	DATE:	NO.	BY:	DATE:	S-11
1			3			TOTAL SHEETS
2			4			21

DRAWN BY : B. MATHEW DATE : 01/2012
CHECKED BY : J.R. DUGGINS DATE : 4/12

07-NOV-2012 10:27
User: John Duggins
I:\Bridge Plans\BD-5114N Final Plans\BD5114N_SD_CS.dgn
Jduggins

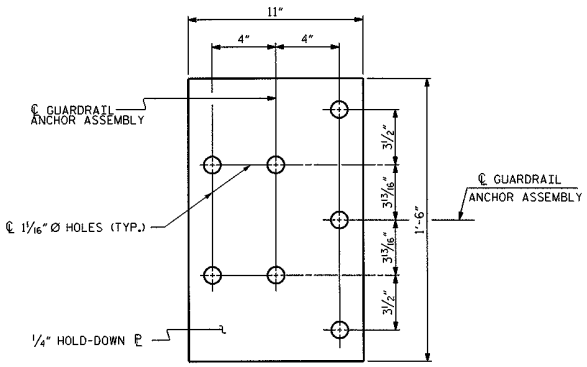

PLAN

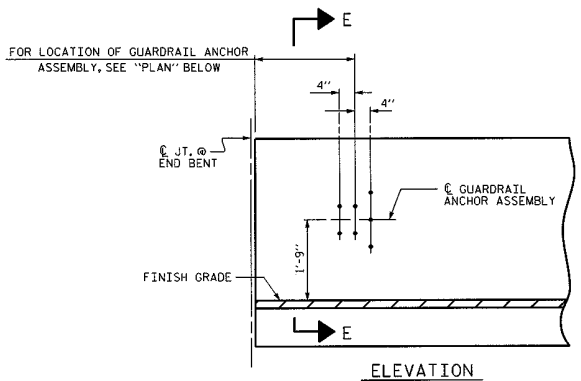

ELEVATION

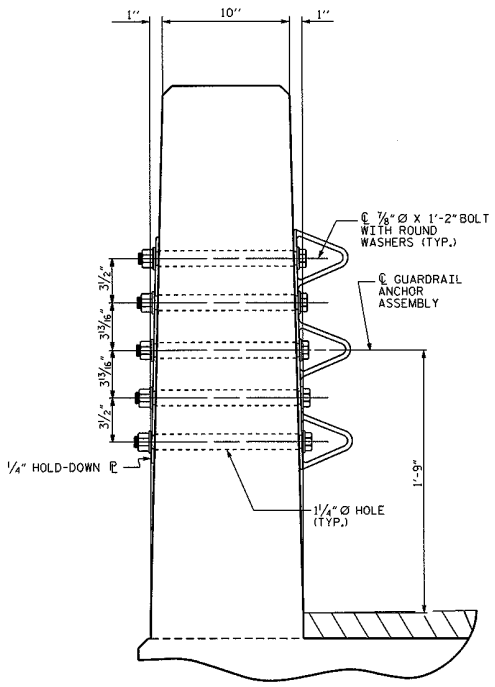

SECTION E-E

GUARDRAIL ANCHOR ASSEMBLY DETAILS

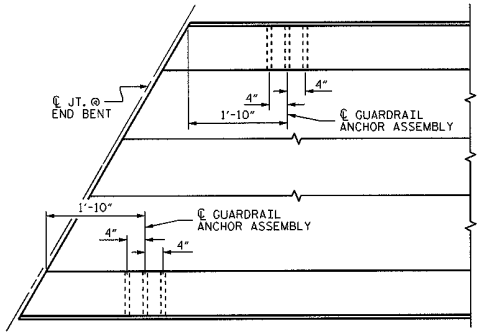

PLAN

LOCATION OF ANCHORS FOR GUARDRAIL

END BENT #1 SHOWN, END BENT #2 SIMILAR.

NOTES

THE GUARDRAIL ANCHOR ASSEMBLY SHALL CONSIST OF A 1/4" HOLD DOWN PLATE AND 7 - 7/8" Ø BOLTS WITH NUTS AND WASHERS.

THE HOLD-DOWN PLATE SHALL CONFORM TO AASHTO M270 GRADE 36. AFTER FABRICATION, THE HOLD-DOWN PLATE SHALL BE HOT-DIP GALVANIZED IN ACCORDANCE WITH AASHTO M111.

BOLTS SHALL CONFORM TO THE REQUIREMENTS OF ASTM A307 AND NUTS SHALL CONFORM TO THE REQUIREMENTS OF AASHTO M291. BOLTS, NUTS AND WASHERS SHALL BE GALVANIZED. (AT THE CONTRACTOR'S OPTION, STAINLESS STEEL BOLTS, NUTS AND WASHERS MAY BE USED AS AN ALTERNATE FOR THE 7/8" Ø GALVANIZED BOLTS, NUTS AND WASHERS. THEY SHALL CONFORM TO OR EXCEED THE MECHANICAL REQUIREMENTS OF ASTM A307. THE USE OF THIS ALTERNATE SHALL BE APPROVED BY THE ENGINEER.)

THE GUARDRAIL ANCHOR ASSEMBLY IS REQUIRED AT ALL POINTS WHERE APPROACH GUARDRAIL IS TO BE ATTACHED TO THE END OF BARRIER RAIL. FOR POINTS OF ATTACHMENT, SEE SKETCH.

AFTER INSTALLATION, THE EXPOSED THREAD OF THE BOLT SHALL BE BURRED WITH A SHARP POINTED TOOL.

THE COST OF THE GUARDRAIL ANCHOR ASSEMBLY SHALL BE INCLUDED IN THE UNIT CONTRACT PRICE BID FOR VERTICAL CONCRETE BARRIER RAIL.

THE VERTICAL REINFORCING BARS MAY BE SHIFTED SLIGHTLY IN THE VERTICAL CONCRETE BARRIER RAIL TO CLEAR ASSEMBLY BOLTS.

THE 1 1/4" Ø HOLES SHALL BE FORMED OR DRILLED WITH A CORE BIT. IMPACT TOOLS WILL NOT BE PERMITTED. ANY CONCRETE DAMAGED BY THIS WORK SHALL BE REPAIRED TO THE SATISFACTION OF THE ENGINEER.

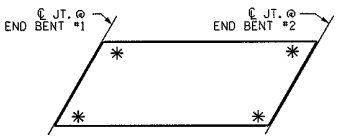

SKETCH SHOWING POINTS OF ATTACHMENT

* DENOTES GUARDRAIL ANCHOR ASSEMBLY

PROJECT NO. BD-5114N

GRAHAM COUNTY

STATION: 12+43.67 -L-

STATE OF NORTH CAROLINA
DEPARTMENT OF TRANSPORTATION
RALEIGH

STANDARD
GUARDRAIL ANCHORAGE FOR VERTICAL CONCRETE BARRIER RAIL

REVISIONS						SHEET NO.
NO.	BY:	DATE:	NO.	BY:	DATE:	S-12
1			3			TOTAL SHEETS
2			4			21

NORTH CAROLINA PROFESSIONAL SEAL 15779 ENGINEER JOHN R. DUGGINS, JR.
5/9/12

STD. NO. GRA3

ASSEMBLED BY : V.X. NGUYEN	DATE : 1-6-12
CHECKED BY : J.R. DUGGINS	DATE : 1-6-12
DRAWN BY : MAA 5/10	ADDED 5/6/10 MAA/GM
CHECKED BY : GM 5/10	REV. 10/1/11 MAA/GM
	REV. 12/5/11

08-MAY-2012 15:42
S:\VDP04\John\LIBR.Files\BD-5114N\Final_Plans\BD5114N_SD_CS.dgn
jduggins

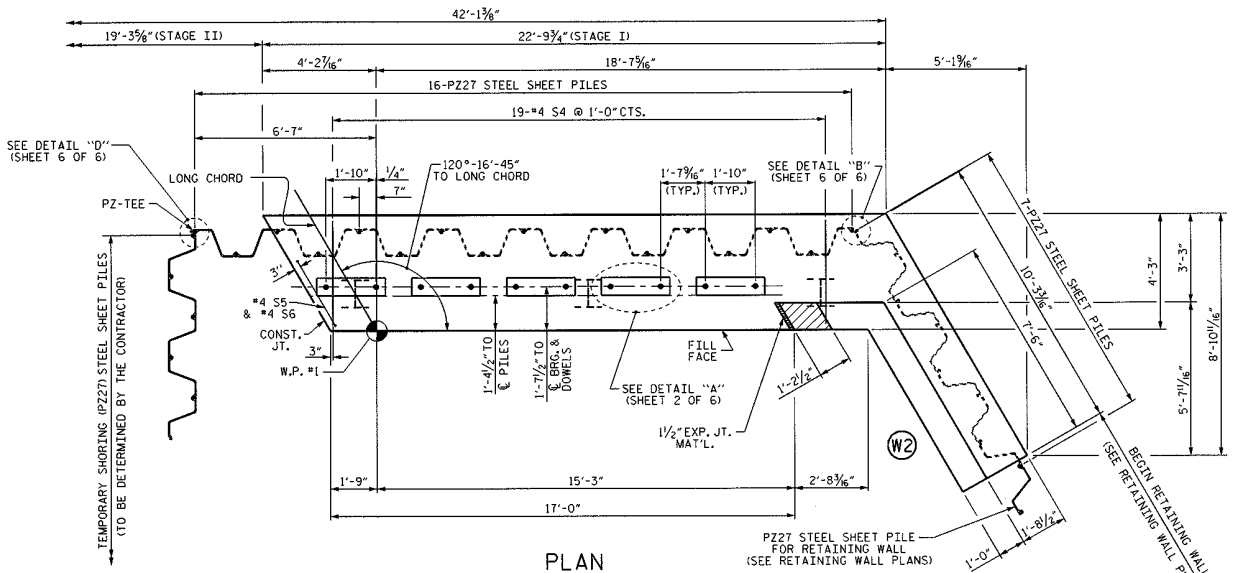

PLAN

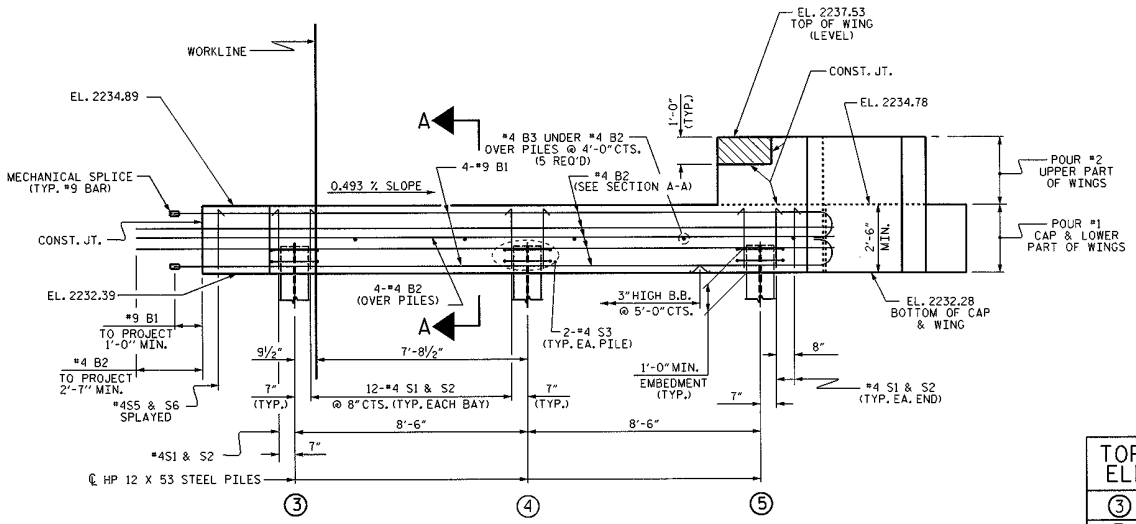

ELEVATION

SHEET PILES NOT SHOWN FOR CLARITY.
ELEVATIONS SHOWN AT ℄ CAP.

TOP OF PILE ELEVATIONS	
③	2233.39
④	2233.35
⑤	2233.30

NOTES

STIRRUPS IN CAP MAY BE SHIFTED AS NECESSARY TO CLEAR DOWELS.

THE CONCRETE IN THE SHADED AREA OF THE WING SHALL BE POURED AFTER THE VERTICAL CONCRETE BARRIER RAIL IS CAST IF SLIP FORMING IS USED.

FOR PILE SPLICE DETAILS, SEE SHEET 6 OF 6.

FOR WING DETAILS, SEE SHEET 5 OF 6.

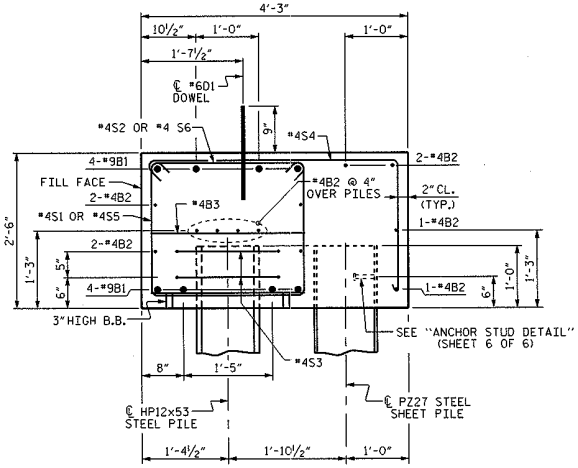

SECTION A-A

PROJECT NO. BD-5114N

GRAHAM COUNTY

STATION: 12+43.67 -L-

SHEET 1 OF 6

STATE OF NORTH CAROLINA
DEPARTMENT OF TRANSPORTATION
RALEIGH

SUBSTRUCTURE
END BENT No. 1
STAGE I

REVISIONS						SHEET NO.
NO.	BY:	DATE:	NO.	BY:	DATE:	5-13
1			3			TOTAL SHEETS
2			4			21

NORTH CAROLINA PROFESSIONAL SEAL 15779 ENGINEER JOHN R. DUGGINS
10/16/12

ASSEMBLED BY :	B. N. GRADY	DATE : 08/2012
CHECKED BY :	J. R. DUGGINS	DATE : 09/2012
DRAWN BY :	DGE 01/10	
CHECKED BY :	MKT 01/10	

16-OCT-2012 10:05
S:\DPG4\John\LIBR.Files\BD-5114N\BD-5114N_sd_E.dgn
jduggins

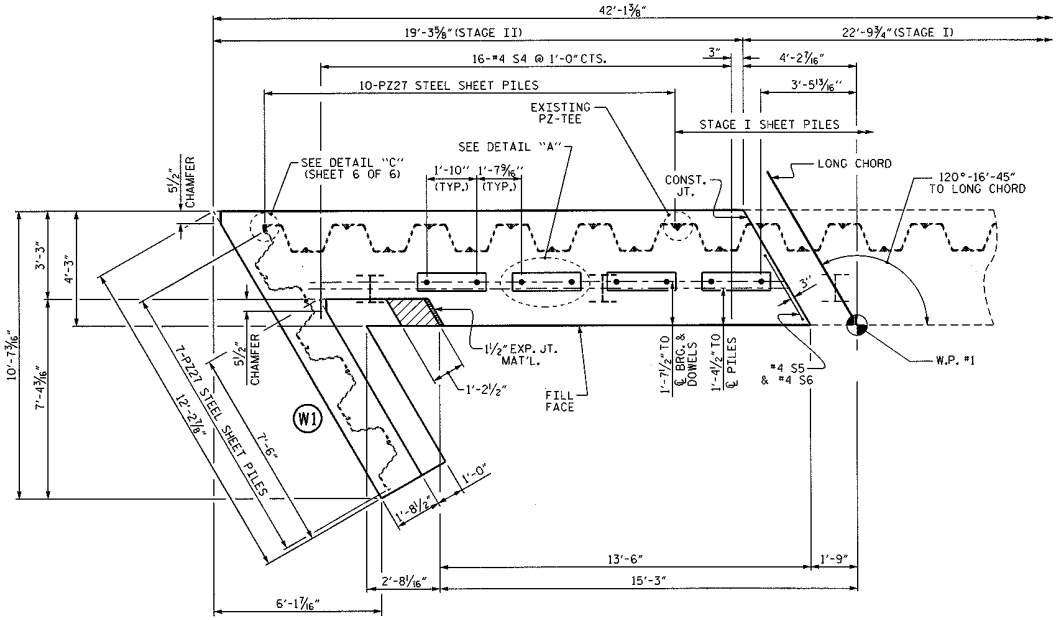

PLAN

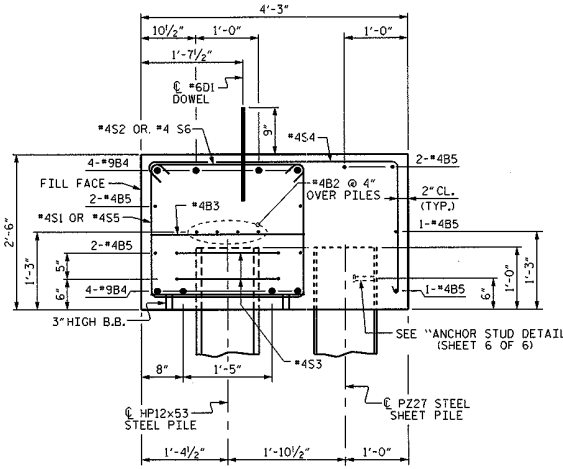

SECTION B-B

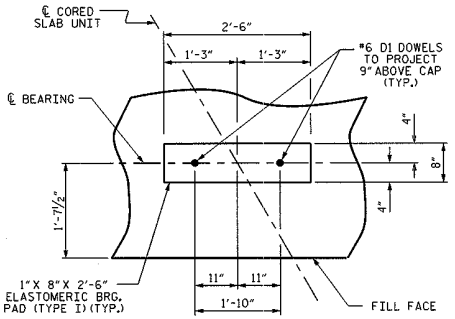

DETAIL "A"

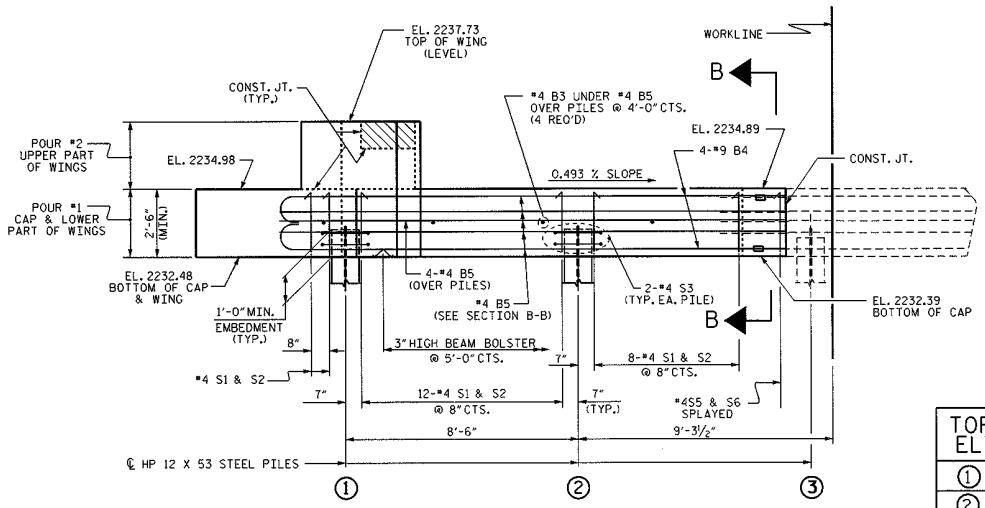

ELEVATION

SHEET PILES NOT SHOWN FOR CLARITY.
ELEVATIONS SHOWN AT ℄ CAP.

TOP OF PILE ELEVATIONS	
1	2233.47
2	2233.43

PROJECT NO. BD-5114N

GRAHAM COUNTY

STATION: 12+43.67 -L-

SHEET 2 OF 6

STATE OF NORTH CAROLINA
DEPARTMENT OF TRANSPORTATION
RALEIGH

SUBSTRUCTURE
END BENT No. 1
STAGE II

REVISIONS						SHEET NO.
NO.	BY:	DATE:	NO.	BY:	DATE:	S-14
1			3			TOTAL SHEETS
2			4			21

NORTH CAROLINA PROFESSIONAL SEAL 15779 ENGINEER JOHN R. DUGGINS, JR.
10/16/12

ASSEMBLED BY : B. N. GRADY DATE : 08/2012
CHECKED BY : J. R. DUGGINS DATE : 09/2012
DRAWN BY : DGE 01/10
CHECKED BY : MKT 01/10

16-OCT-2012 10:05
S:\DPG4\John\LIBR.Files\BD-5114N\BD-5114N_sd_E.dgn
jduggins

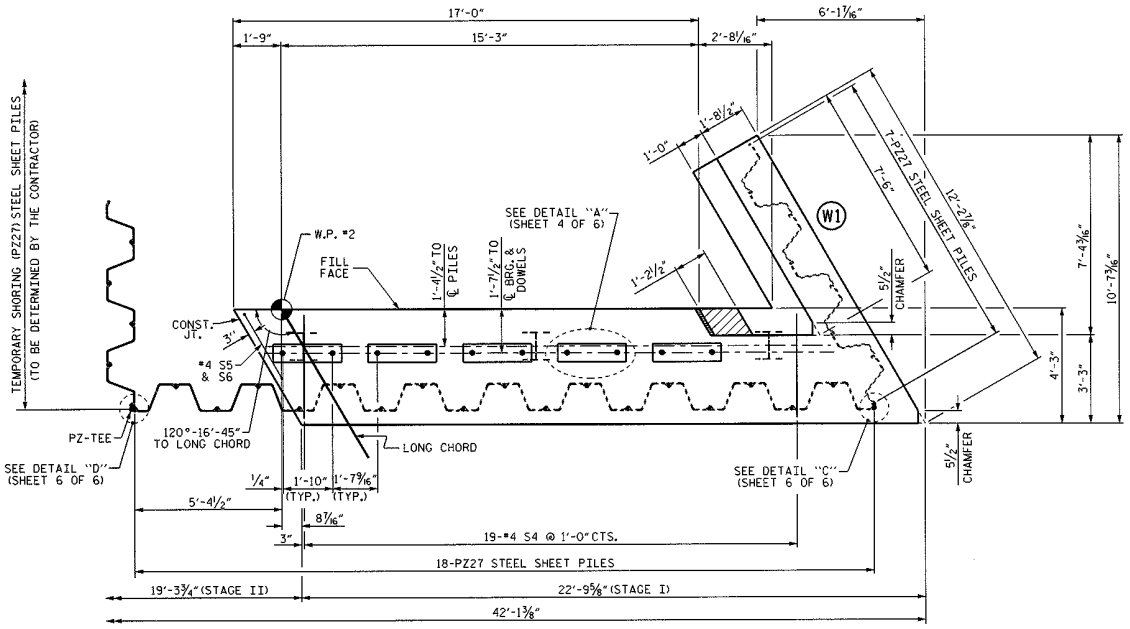

PLAN

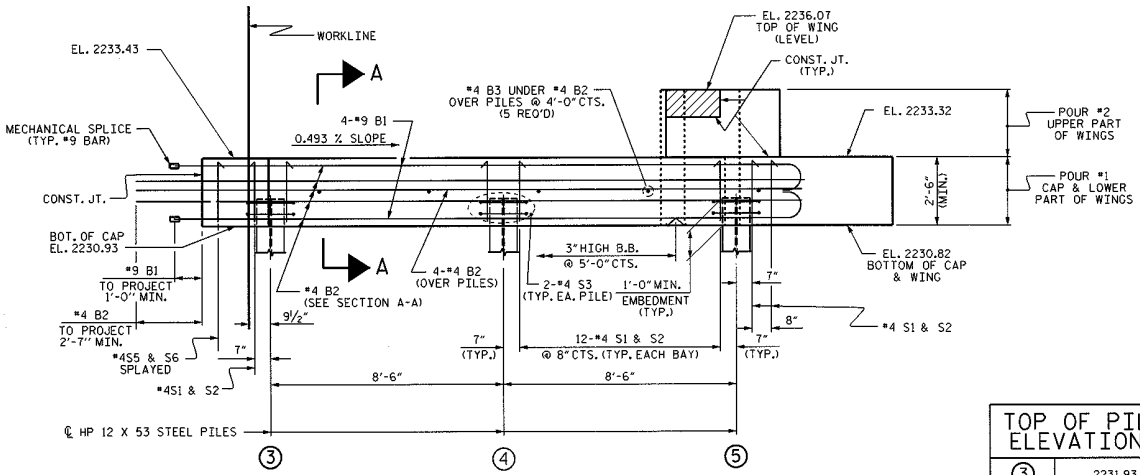

ELEVATION

SHEET PILES NOT SHOWN FOR CLARITY.
ELEVATIONS SHOWN AT ℄ CAP.

TOP OF PILE ELEVATIONS	
③	2231.93
④	2231.88
⑤	2231.84

NOTES

STIRRUPS IN CAP MAY BE SHIFTED AS NECESSARY TO CLEAR DOWELS.

THE CONCRETE IN THE SHADED AREA OF THE WING SHALL BE POURED AFTER THE VERTICAL CONCRETE BARRIER RAIL IS CAST IF SLIP FORMING IS USED.

FOR PILE SPLICE DETAILS, SEE SHEET 6 OF 6.

FOR WING DETAILS, SEE SHEET 5 OF 6.

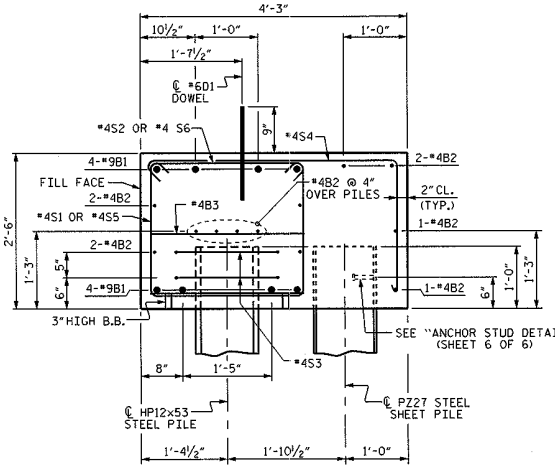

SECTION A-A

PROJECT NO. BD-5114N
GRAHAM COUNTY
STATION: 12+43.67 -L-
SHEET 3 OF 6

STATE OF NORTH CAROLINA
DEPARTMENT OF TRANSPORTATION
RALEIGH

SUBSTRUCTURE
END BENT No. 2
STAGE I

REVISIONS						SHEET NO.
NO.	BY:	DATE:	NO.	BY:	DATE:	S-15
1			3			TOTAL SHEETS
2			4			21

NORTH CAROLINA PROFESSIONAL SEAL 15779 ENGINEER JOHN R. DUGGINS
10/19/12

ASSEMBLED BY :	B. N. GRADY	DATE :	08/2012
CHECKED BY :	J. R. DUGGINS	DATE :	09/2012
DRAWN BY :	DGE 01/10		
CHECKED BY :	MKT 01/10		

16-OCT-2012 10:06
S:\DPG4\John\LIBR.Files\BD-5114N\BD-5114N_sd_E.dgn
jduggins

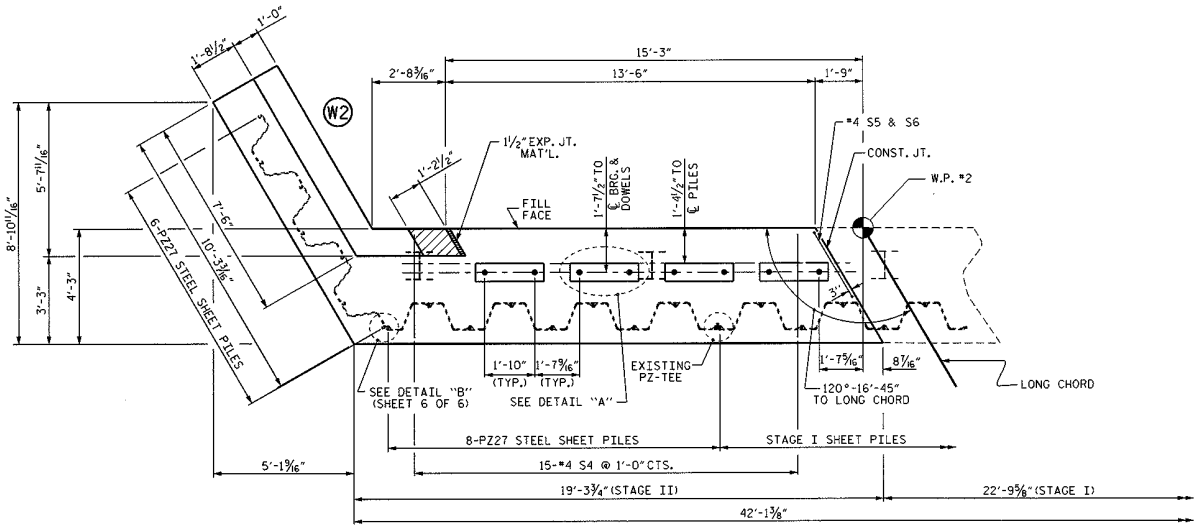

PLAN

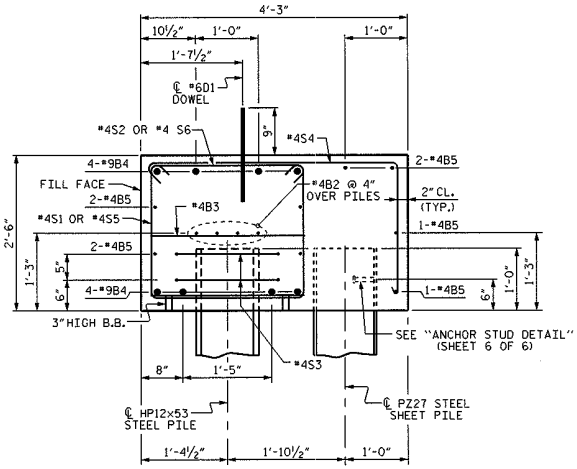

SECTION B-B

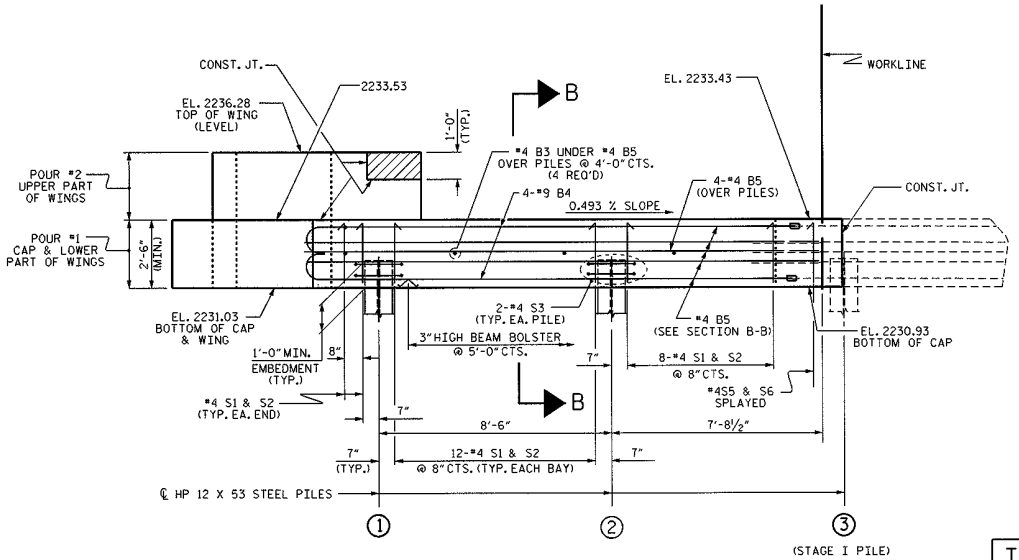

ELEVATION

SHEET PILES NOT SHOWN FOR CLARITY.
ELEVATIONS SHOWN AT ℄ CAP.

TOP OF PILE ELEVATIONS	
1	2232.01
2	2231.97

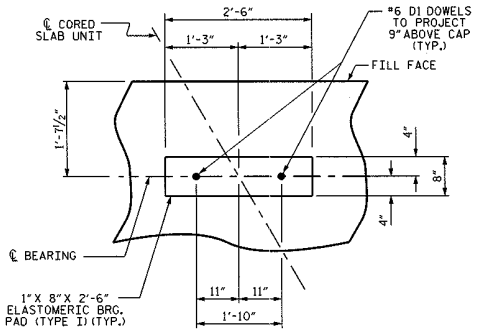

DETAIL "A"

PROJECT NO. BD-5114N
GRAHAM COUNTY
STATION: 12+43.67 -L-
SHEET 4 OF 6

STATE OF NORTH CAROLINA
DEPARTMENT OF TRANSPORTATION
RALEIGH

SUBSTRUCTURE
END BENT No. 2
STAGE II

REVISIONS						SHEET NO.
NO.	BY:	DATE:	NO.	BY:	DATE:	S-16
1			3			TOTAL SHEETS
2			4			21

NORTH CAROLINA PROFESSIONAL SEAL 15779 ENGINEER JOHN R. DUGGINS
10/16/12

ASSEMBLED BY : B. N. GRADY	DATE : 08/2012	
CHECKED BY : J. R. DUGGINS	DATE : 09/2012	
DRAWN BY : DGE 01/10		
CHECKED BY : MKT 01/10		

16-OCT-2012 10:06
s:\DRG4\John\LIBR.Files\BD-5114N\BD-5114N.sd.E.dgn
jduggins

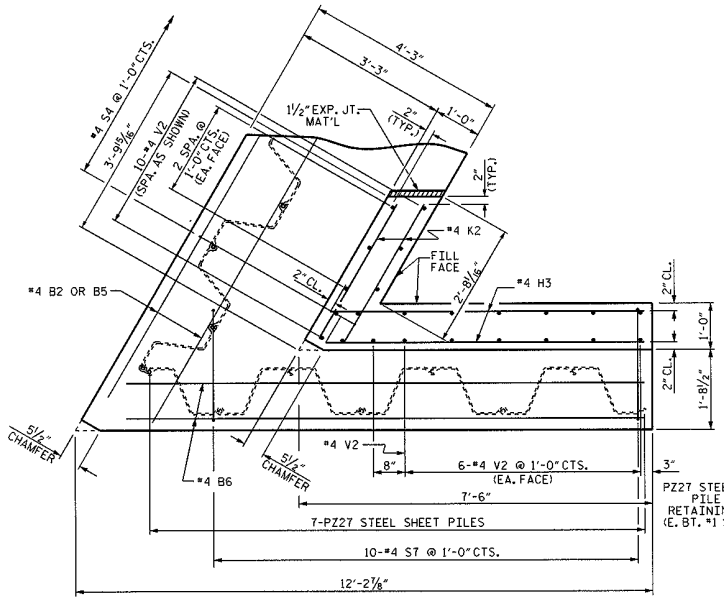

PLAN OF WING (W1)

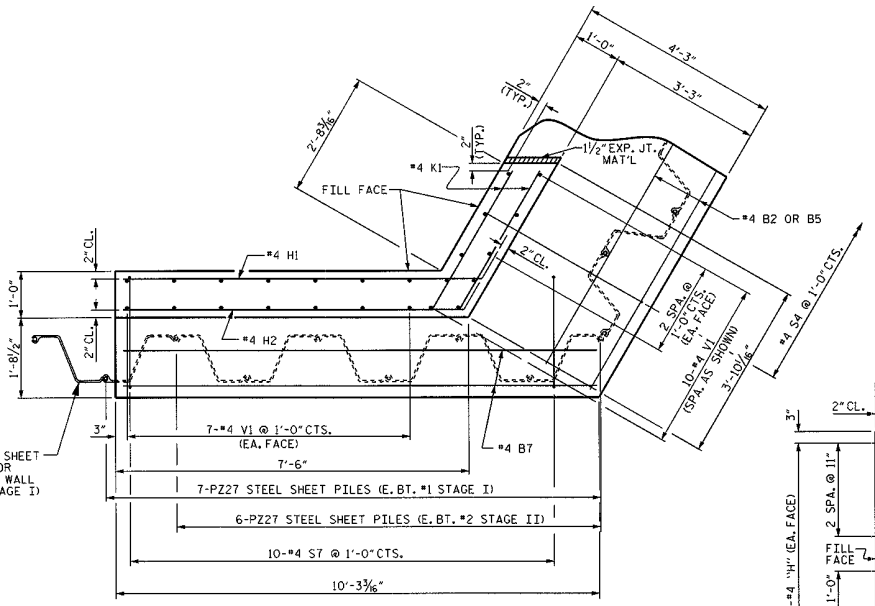

PLAN OF WING (W2)

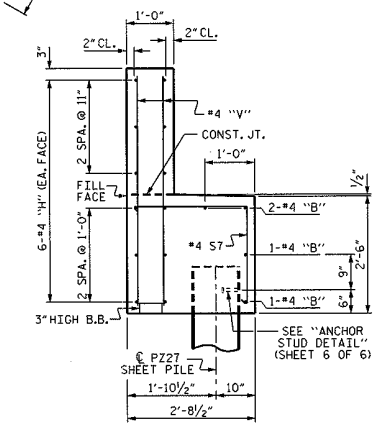

SECTION X-X

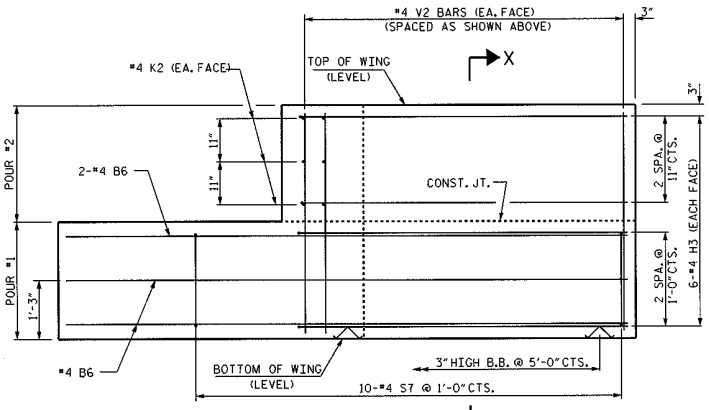

ELEVATION OF WING (W1)

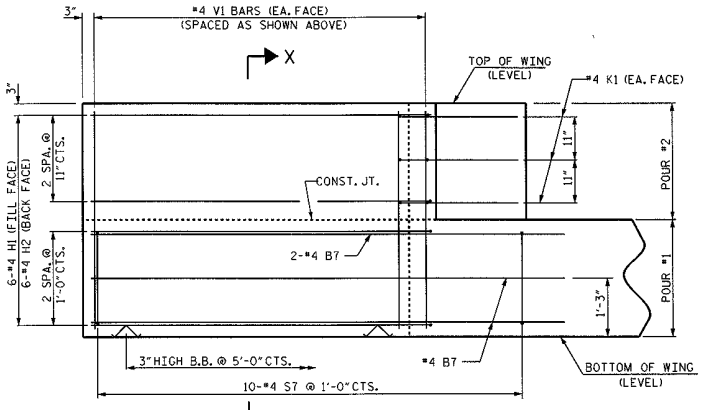

ELEVATION OF WING (W2)

WING DETAILS

ASSEMBLED BY : B. N. GRADY	DATE : 08/2012
CHECKED BY : J. R. DUGGINS	DATE : 09/2012
DRAWN BY : DGE 12/09	
CHECKED BY : MKT 01/10	

16-OCT-2012 10:06
S:\DPG4\John\LIBR_Files\BD-5114N\BD-5114N_sd_E.dgn
jduggins

PROJECT NO. BD-5114N

GRAHAM COUNTY

STATION: 12+43.67 -L-

SHEET 5 OF 6

STATE OF NORTH CAROLINA
DEPARTMENT OF TRANSPORTATION
RALEIGH

SUBSTRUCTURE
END BENT
WING DETAILS

NORTH CAROLINA PROFESSIONAL SEAL 15779 ENGINEER JOHN R. DUGGINS JR.
10/16/12

REVISIONS						SHEET NO.
NO.	BY:	DATE:	NO.	BY:	DATE:	S-17
1			3			TOTAL SHEETS
2			4			21

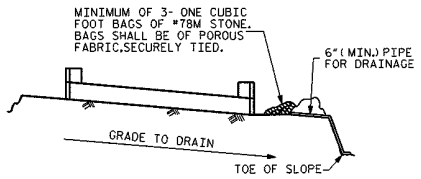

BAGGED STONE AND PIPE SHALL BE PLACED IMMEDIATELY AFTER COMPLETION OF END BENT EXCAVATION. PIPE MAY BE EITHER CONCRETE, CORRUGATED STEEL, CORRUGATED ALUMINUM ALLOY, OR CORRUGATED PLASTIC. PERFORATED PIPE WILL NOT BE ALLOWED.

BAGGED STONE SHALL REMAIN IN PLACE UNTIL THE ENGINEER DIRECTS THAT IT BE REMOVED. THE CONTRACTOR SHALL REMOVE AND DISPOSE OF SILT ACCUMULATIONS AT BAGGED STONE WHEN SO DIRECTED BY THE ENGINEER. BAGS SHALL BE REMOVED AND REPLACED WHENEVER THE ENGINEER DETERMINES THAT THEY HAVE DETERIORATED AND LOST THEIR EFFECTIVENESS.

NO SEPARATE PAYMENT WILL BE MADE FOR THIS WORK AND THE ENTIRE COST OF THIS WORK SHALL BE INCLUDED IN THE UNIT CONTRACT PRICE BID FOR THE SEVERAL PAY ITEMS.

TEMPORARY DRAINAGE AT END BENT

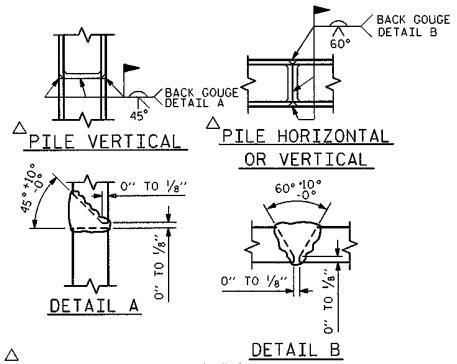

△ POSITION OF PILE DURING WELDING.

PILE SPLICE DETAILS

BAR TYPES

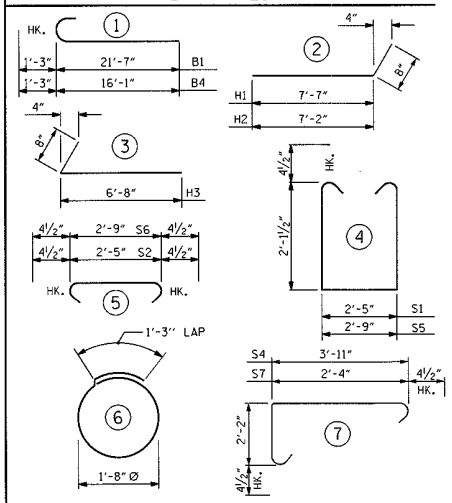

ALL BAR DIMENSIONS ARE OUT TO OUT.

HP 12 X 53 STEEL PILES (STAGE I)			HP 12 X 53 STEEL PILES (STAGE II)		
E. BENT No. 1	NO: 3	LIN. FT.= 120	E. BENT No. 1	NO: 2	LIN. FT.= 60
E. BENT No. 2	NO: 3	LIN. FT.= 120	E. BENT No. 2	NO: 2	LIN. FT.= 70
TOTAL	NO: 6	LIN. FT.= 240	TOTAL	NO: 4	LIN. FT.= 130

18" STEEL SHEET PILES (STAGE I)		18" STEEL SHEET PILES (STAGE II)	
No. PZ27 = 48		No. PZ27 = 31	
No. PZ90 = 1		No. PZ90 = 1	
No. 135° CONNECTOR (COBRA) = 1		No. 135° CONNECTOR (COBRA) = 1	
No. PZ-TEE = 2		TOTAL No. = 33	
TOTAL No. = 52			
E. BENT No. 1	325 SQ. FT.	E. BENT No. 1	240 SQ. FT.
E. BENT No. 2	560 SQ. FT.	E. BENT No. 2	315 SQ. FT.

BILL OF MATERIAL FOR ONE END BENT

	STAGE I							STAGE II					
	BAR	NO.	SIZE	TYPE	LENGTH	WEIGHT		BAR	NO.	SIZE	TYPE	LENGTH	WEIGHT
	B1	8	#9	1	22'-10"	621		B4	8	#9	1	17'-4"	471
	B2	12	#4	STR	23'-3"	186		B5	12	#4	STR	17'-0"	136
	B3	5	#4	STR	2'-5"	8		B3	4	#4	STR	2'-5"	6
E. BT. #2	B6	4	#4	STR	11'-2"	30	E. BT. #1	B6	4	#4	STR	11'-2"	30
E. BT. #1	B7	4	#4	STR	10'-0"	27	E. BT. #2	B7	4	#4	STR	10'-0"	27
	D1	10	#6	STR	1'-6"	23		D1	8	#6	STR	1'-6"	18
E. BT. #1	H1	6	#4	2	8'-3"	33	E. BT. #2	H1	6	#4	2	8'-3"	33
	H2	6	#4	2	7'-10"	31		H2	6	#4	2	7'-10"	31
E. BT. #2	H3	12	#4	3	7'-4"	59	E. BT. #1	H3	12	#4	3	7'-4"	59
E. BT. #1	K1	6	#4	STR	3'-4"	13	E. BT. #2	K1	6	#4	STR	3'-4"	13
E. BT. #2	K2	6	#4	STR	3'-3"	13	E. BT. #1	K2	6	#4	STR	3'-3"	13
	S1	27	#4	4	7'-6"	134		S1	22	#4	4	7'-5"	109
	S2	27	#4	5	3'-2"	57		S2	22	#4	5	3'-2"	47
	S3	6	#4	6	6'-6"	26		S3	4	#4	6	6'-6"	17
	S4	19	#4	7	6'-10"	87		S4	16	#4	7	6'-10"	73
	S5	1	#4	4	7'-9"	5		S5	1	#4	4	7'-9"	5
	S6	1	#4	5	3'-6"	2		S6	1	#4	5	3'-6"	2
	S7	10	#4	7	5'-3"	35		S7	10	#4	7	5'-3"	35
E. BT. #1	V1	24	#4	STR	4'-11"	79	E. BT. #2	V1	24	#4	STR	4'-11"	79
E. BT. #2	V2	23	#4	STR	4'-11"	76	E. BT. #1	V2	23	#4	STR	4'-11"	76
	E. BT. #1 REINFORCING STEEL 1367 LBS.							E. BT. #1 REINFORCING STEEL 1097 LBS.					
	E. BT. #2 REINFORCING STEEL 1362 LBS.							E. BT. #2 REINFORCING STEEL 1102 LBS.					

CLASS A CONCRETE BREAKDOWN		CLASS A CONCRETE BREAKDOWN	
POUR #1 CAP & LOWER PART OF WINGS	10.6 C.Y.	POUR #1 CAP & LOWER PART OF WINGS	9.2 C.Y.
POUR #2 UPPER PART OF WINGS	1.1 C.Y.	POUR #2 UPPER PART OF WINGS	1.0 C.Y.
TOTAL CLASS A CONCRETE	11.7 C.Y.	TOTAL CLASS A CONCRETE	10.2 C.Y.

TEMPORARY SHORING

END BENT No. 1	150 SQ. FT.	END BENT No. 2	180 SQ. FT.

TOTAL BILL OF MATERIAL

	CLASS A CONCRETE CU. YDS.	REINFORCING STEEL LBS.	HP 12 X 53 STEEL PILES NO.	HP 12 X 53 STEEL PILES LIN. FT.	18" STEEL SHEET PILES SQ. FT.	TEMPORARY SHORING SQ. FT.
E. BT. #1	21.9	2464	5	180	565	150
E. BT. #2	21.9	2464	5	190	875	180
TOTAL	43.8	4928	10	370	1440	330

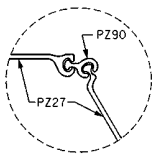

DETAIL "B"

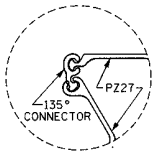

DETAIL "C"

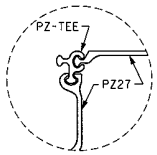

DETAIL "D"

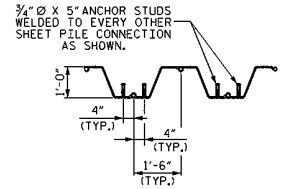

ANCHOR STUD DETAIL

NORTH CAROLINA PROFESSIONAL SEAL 15779 ENGINEER JOHN R. DUGGINS JR.
10/16/12

PROJECT NO. BD-5114N
GRAHAM COUNTY
STATION: 12+43.67 -L-

SHEET 6 OF 6

STATE OF NORTH CAROLINA
DEPARTMENT OF TRANSPORTATION
RALEIGH

SUBSTRUCTURE

END BENT No. 1 & 2 DETAILS

REVISIONS						SHEET NO.
NO.	BY:	DATE:	NO.	BY:	DATE:	S-18
1			3			TOTAL SHEETS
2			4			21

ASSEMBLED BY : B. N. GRADY	DATE : 08/2012
CHECKED BY : J. R. DUGGINS	DATE : 09/2012
DRAWN BY : DGE 12/09	
CHECKED BY : MKT 01/10	

16-OCT-2012 10:07
S:\DPG4\John\LIBR_Files\BD-5114N\BD-5114N_sd_E.dgn
jduggins

NOTES :

PLACE RIP RAP ALONG STREAM BANKS AS SHOWN.

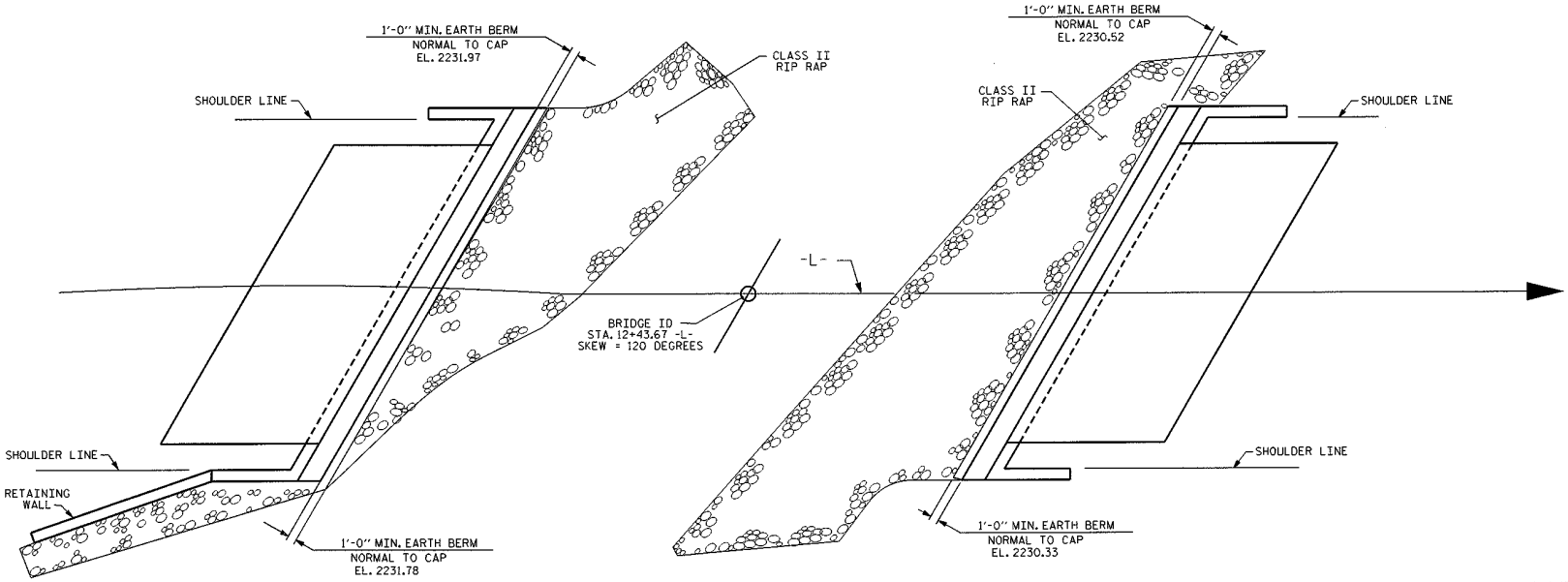

END BENT No. 1

END BENT No. 2

PLAN

ESTIMATED QUANTITIES		
BRIDGE @ STA. 12+43.67 -L-	RIP RAP CLASS II (2'-0" THICK)	GEOTEXTILE FOR DRAINAGE
	TONS	SQUARE YARDS
END BENT 1	65	73
END BENT 2	60	67

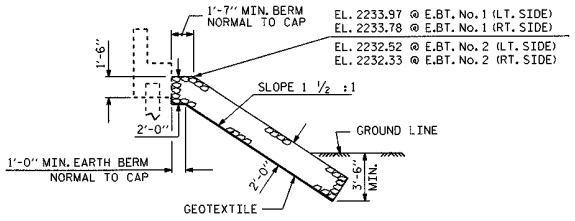

℄ SECTION

BERM RIP RAPPED

PROJECT NO. BD-5114N

GRAHAM COUNTY

STATION: 12+43.67 -L-

STATE OF NORTH CAROLINA
DEPARTMENT OF TRANSPORTATION
RALEIGH

STANDARD

RIP RAP DETAILS

NORTH CAROLINA PROFESSIONAL SEAL 15779 ENGINEER JOHN R. DUGGINS, JR.

5/9/12

REVISIONS						SHEET NO.
NO.	BY:	DATE:	NO.	BY:	DATE:	S-19
1			3			TOTAL SHEETS
2			4			21

STD. NO. RR1

ASSEMBLED BY : V.X. NGUYEN	DATE : 1-10-12		
CHECKED BY : J.R. DUGGINS	DATE : 4-12		
DRAWN BY : REK 1/84	REV. 5/1/06R	TLA/GM	
CHECKED BY : RDU 1/84	REV. 10/1/11	MAA/GM	
	REV. 12/21/11	MAA/GM	

08-MAY-2012 15:37
S:\OPDA\John\LIBR_Files\BD-5114N\Final_Plans\BD5114N_SD_RR.dgn
jduggins

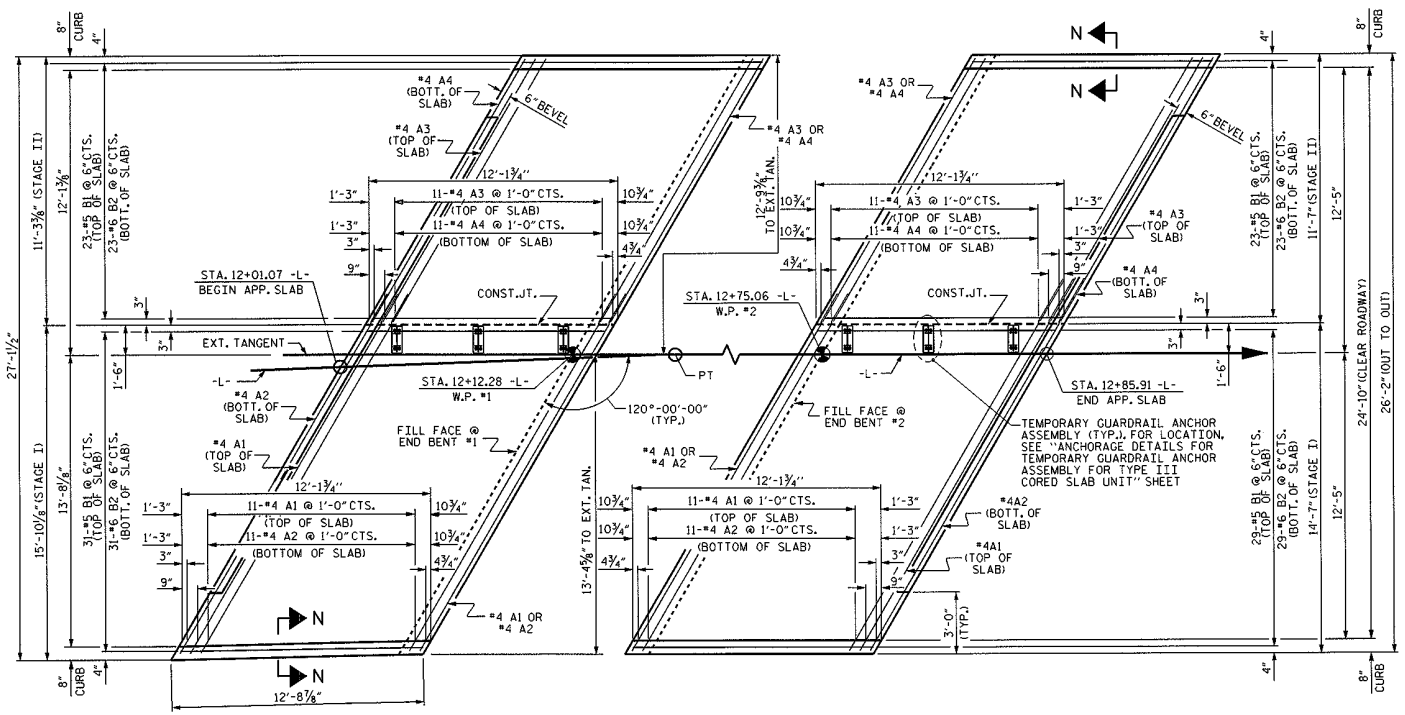

PLAN @ END BENT #1

PLAN @ END BENT #2

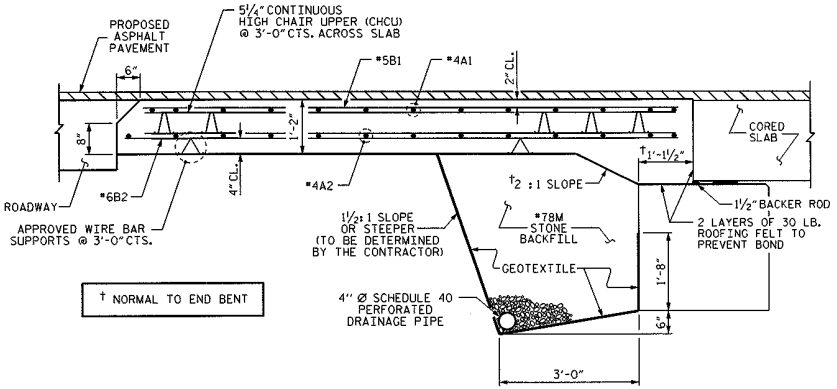

SECTION THRU SLAB

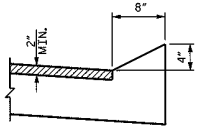

SECTION N-N

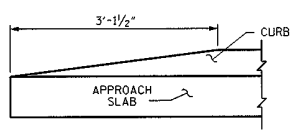

END OF CURB WITHOUT SHOULDER BERM GUTTER

CURB DETAILS

BILL OF MATERIAL

APPROACH SLAB AT E.BT. 1 STAGE I

BAR	NO.	SIZE	TYPE	LENGTH	WEIGHT
✱A1	13	#4	STR	18'-10"	164
A2	13	#4	STR	18'-7"	161
✱B1	31	#5	STR	11'-1"	358
B2	31	#6	STR	11'-7"	539
REINFORCING STEEL				LBS.	700
✱EPOXY COATED REINFORCING STEEL				LBS.	522
CLASS AA CONCRETE				C.Y.	9.5

APPROACH SLAB AT E.BT. 2 STAGE I

BAR	NO.	SIZE	TYPE	LENGTH	WEIGHT
✱A1	13	#4	STR	18'-10"	164
A2	13	#4	STR	18'-7"	161
✱B1	29	#5	STR	11'-1"	335
B2	29	#6	STR	11'-7"	505
REINFORCING STEEL				LBS.	666
✱EPOXY COATED REINFORCING STEEL				LBS.	499
CLASS AA CONCRETE				C.Y.	9.3

APPROACH SLAB AT E.BT. 1 STAGE II

BAR	NO.	SIZE	TYPE	LENGTH	WEIGHT
✱A3	13	#4	STR	13'-1"	114
A4	13	#4	STR	13'-1"	114
✱B1	23	#5	STR	11'-1"	266
B2	23	#6	STR	11'-7"	400
REINFORCING STEEL				LBS.	514
✱EPOXY COATED REINFORCING STEEL				LBS.	380
CLASS AA CONCRETE				C.Y.	7.4

APPROACH SLAB AT E.BT. 2 STAGE II

BAR	NO.	SIZE	TYPE	LENGTH	WEIGHT
✱A3	13	#4	STR	13'-1"	114
A4	13	#4	STR	13'-1"	114
✱B1	23	#5	STR	11'-1"	266
B2	23	#6	STR	11'-7"	400
REINFORCING STEEL				LBS.	514
✱EPOXY COATED REINFORCING STEEL				LBS.	380
CLASS AA CONCRETE				C.Y.	7.4

✱THESE BARS ARE EPOXY COATED

SPLICE LENGTHS

BAR SIZE	EPOXY COATED	UNCOATED
#4	2'-0"	1'-9"
#5	2'-6"	2'-2"
#6	3'-10"	2'-7"

PROJECT NO. BD-5114N

GRAHAM COUNTY

STATION: 12+43.67 -L-

SHEET 1 OF 2

STATE OF NORTH CAROLINA
DEPARTMENT OF TRANSPORTATION
RALEIGH

STANDARD

BRIDGE APPROACH SLAB FOR PRESTRESSED CONCRETE CORED SLAB UNIT (SUB-REGIONAL TIER)

REVISIONS						SHEET NO.
NO.	BY:	DATE:	NO.	BY:	DATE:	S-20
1			3			TOTAL SHEETS
2			4			21

ASSEMBLED BY : V. NGUYEN DATE : 1/5/12

CHECKED BY : J.R. DUGGINS DATE : 4/12

NORTH CAROLINA PROFESSIONAL SEAL 15779 ENGINEER JOHN R. DUGGINS, JR.

5/9/12

08-MAY-2012 15:35
S:\DPD4\John\LIBR_Files\BD-5114N\Final_Plans\BD5114N_SD_AS.dgn
jduggins

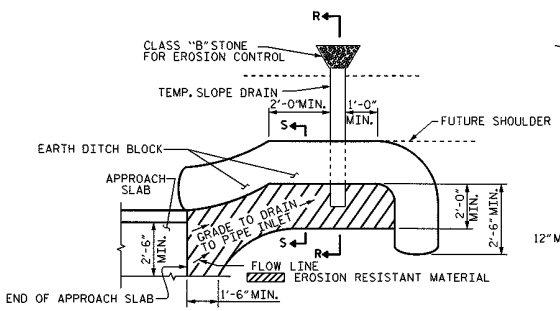

NOTE: IMMEDIATELY AFTER THE CONSTRUCTION OF THE APPROACH SLAB, THE CONTRACTOR SHALL PROVIDE TEMPORARY BERM AND SLOPE DRAIN. CONTRACTOR SHALL GRADE TO PIPE INLET AND PROVIDE EROSION RESISTANT MATERIAL AS SHOWN. THE EROSION RESISTANT MATERIAL SHALL BE EITHER 1) ASPHALT PLANT MIX, TYPE 1 OR TYPE 2, MIN. 2" DEPTH, 2) EROSION CONTROL MAT, OR 3) CONCRETE, AS DIRECTED BY THE ENGINEER. THE SLOPE DRAIN SHALL CONSIST OF A NON-PERFORATED TEMPORARY DRAINAGE PIPE, 12 INCHES IN DIAMETER.

PLAN VIEW

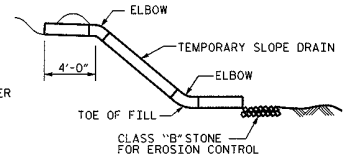

SECTION R-R

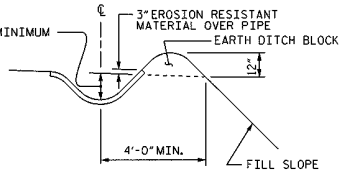

SECTION S-S

TEMPORARY BERM AND SLOPE DRAIN DETAILS

(TO BE USED WHEN SHOULDER BERM GUTTER IS REQUIRED)

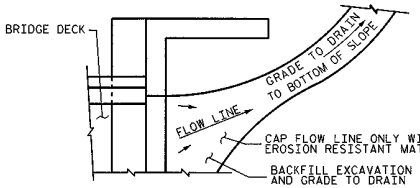

NOTE: IF THE APPROACH SLAB IS NOT CONSTRUCTED IMMEDIATELY AFTER THE BACKFILLING OF THE END BENT EXCAVATION, GRADE TO DRAIN TO THE BOTTOM OF THE SLOPE AND PROVIDE EROSION RESISTANT MATERIAL, SUCH AS FIBERGLASS ROVING OR AS DIRECTED BY THE ENGINEER TO PREVENT SOIL EROSION AND TO PROTECT THE AREA ADJACENT TO THE STRUCTURE. THE CONTRACTOR WILL BE REQUIRED TO REMOVE THESE MATERIALS PRIOR TO CONSTRUCTION OF THE APPROACH SLAB.

TEMPORARY DRAINAGE DETAIL

NOTES

FOR BRIDGE APPROACH FILL INCLUDING GEOTEXTILE, 4"Ø DRAINAGE PIPE, AND "78M STONE BACKFILL, SEE ROADWAY PLANS.

GEOTEXTILE SHALL BE TYPE I IN ACCORDANCE WITH THE STANDARD SPECIFICATIONS SECTION 1056.

"78M STONE BACKFILL (CLASS V SELECT MATERIAL) SHALL BE IN ACCORDANCE WITH STANDARD SPECIFICATIONS SECTION 1016.

"78M STONE BACKFILL IS TO BE CONTINUOUS ALONG FILL FACE OF BACKWALL FROM OUTSIDE EDGE TO OUTSIDE EDGE OF APPROACH SLAB.

FOR THE 4"Ø DRAINAGE PIPE OUTLET(S), SEE ROADWAY STANDARD DRAWINGS.

AREA BETWEEN THE WINGWALL AND APPROACH SLAB SHALL BE GRADED TO DRAIN THE WATER AWAY FROM THE FILL FACE OF THE BRIDGE AND SHALL BE PAVED. SEE ROADWAY PLANS.

APPROACH SLAB GROOVING IS NOT REQUIRED.

PROJECT NO. BD-5114N

GRAHAM COUNTY

STATION: 12+43.67 -L-

SHEET 2 OF 2

STATE OF NORTH CAROLINA
DEPARTMENT OF TRANSPORTATION
RALEIGH

BRIDGE APPROACH SLAB DETAILS

REVISIONS						SHEET NO.
NO.	BY:	DATE:	NO.	BY:	DATE:	S-21
1			3			TOTAL SHEETS
2			4			21

NORTH CAROLINA PROFESSIONAL SEAL 15779 ENGINEER JOHN R. DUGGINS
6/9/12

ASSEMBLED BY :	V. NGUYEN	DATE : 1/5/12
CHECKED BY :	J.R. DUGGINS	DATE : 4/12

08-MAY-2012 15:24
S:\DPG\A\John\LTBR_Files\BD-5114N\Final_Plans\BD5114N_SD_AS.dgn
jduggins

GEOTECHNICAL ENGINEER

ENGINEER

NORTH CAROLINA PROFESSIONAL SEAL 29869 ENGINEER FRANK C CLINE

SIGNATURE DATE

SIGNATURE DATE

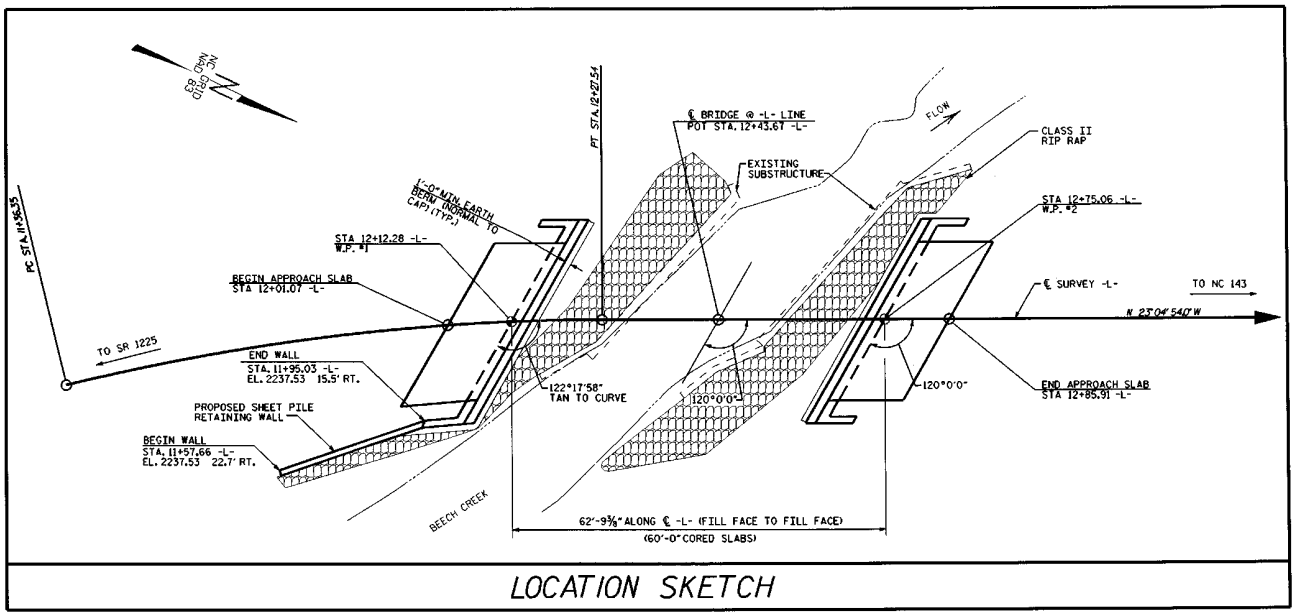

LOCATION SKETCH

NOTES

FIELD ADJUSTMENT OF "A" BARS MAY BE NECESSARY FOR PLACEMENT IN COPING.

ALL REINFORCING SHALL BE GRADE 60 AS DESCRIBED IN SECTION 1070 OF THE STANDARD SPECIFICATIONS.

FOR 18" STEEL SHEET PILES, SEE SECTION 1084-2 OF THE STANDARD SPECIFICATIONS.

INSTALL SHEET PILING TO THE MINIMUM DEPTH SHOWN ON PLANS OR AS DIRECTED BY THE ENGINEER.

SHEETING IS TO BE CONTINUOUS BETWEEN THE WING WALL AND THE RETAINING WALL.

FIELD ADJUSTMENT OF THE COPING/WING WALL INTERFACE MAY BE NECESSARY, AS DIRECTED BY THE ENGINEER.

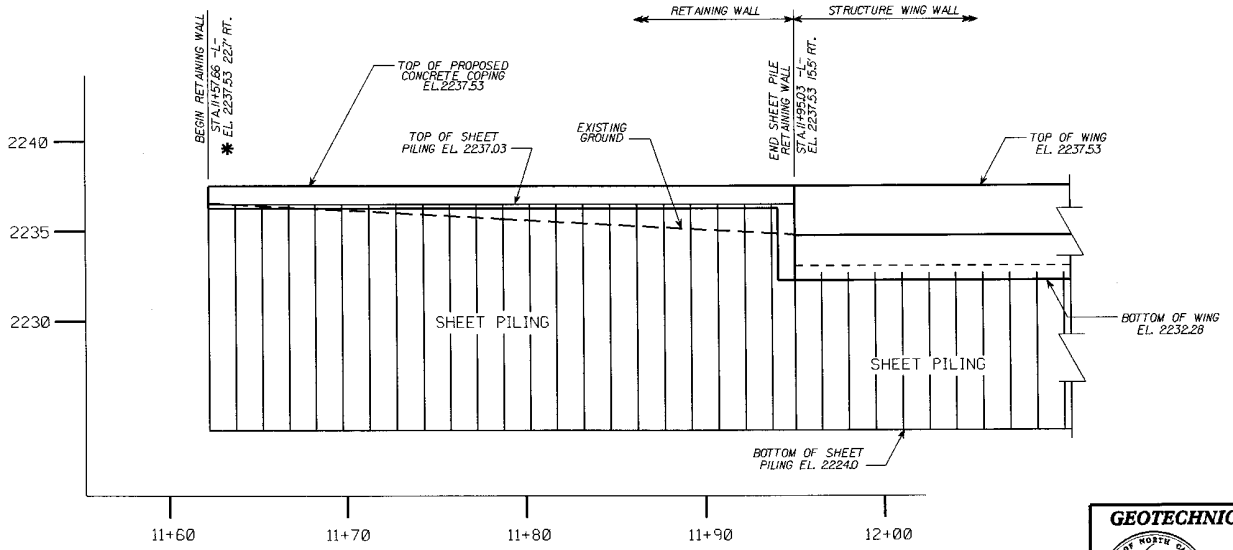

WALL ENVELOPE

PAY ITEMS		
SHEET PILE RETAINING WALL		
TOTAL AREA OF WALL	=	510 SQ. FT.
CONCRETE COPING	=	38 LIN. FT.

PROJECT NO.: BD-5114N

GRAHAM *COUNTY*

STATION: 11+57.66 -L- TO 11+95.03 -L-

SHEET 1 OF 54

PREPARED BY: EJB	DATE: 8/12
REVIEWED BY: SCC	DATE: 8/12

GEOTECHNICAL ENGINEERING UNIT

☐ *EASTERN REGIONAL OFFICE*

☒ *WESTERN REGIONAL OFFICE*

☐ *CONTRACT OFFICE*

STATE OF NORTH CAROLINA
DEPARTMENT OF TRANSPORTATION
RALEIGH

SHEET PILE WALL CONSTRUCTION DETAILS

REVISIONS						SHEET NO.
NO.	BY	DATE	NO.	BY	DATE	
1			3			TOTAL SHEETS
2			4			

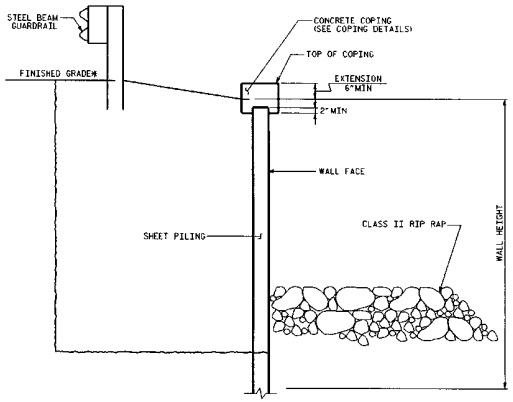

SHEET PILE WALL - TYPICAL SECTION

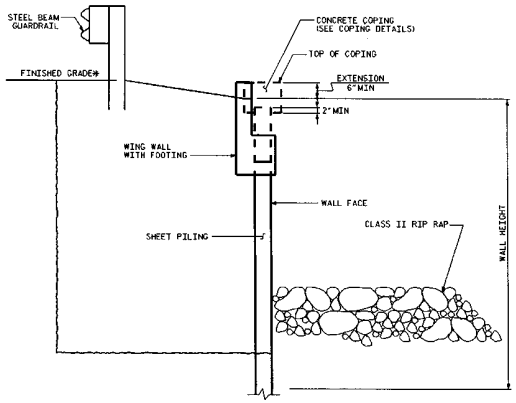

SHEET PILE WALL - TYPICAL SECTION
AT WALL / END BENT WING INTERFACE

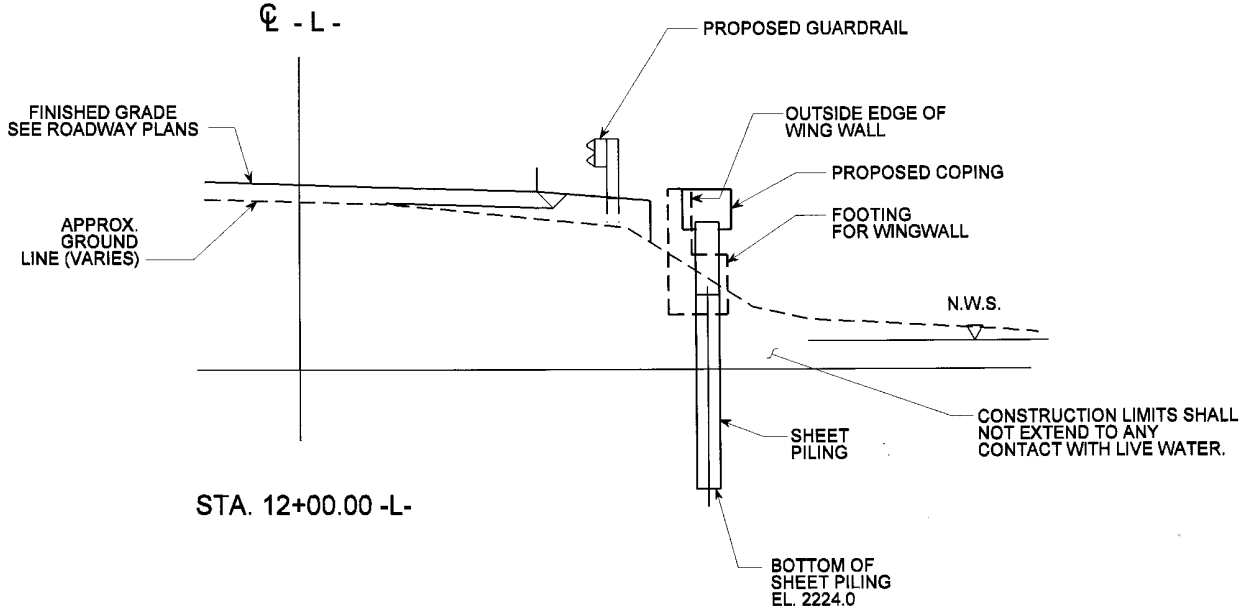

SHEET PILE RETAINING WALL

SHOWING END BENT 1, WING WALL W2

GEOTECHNICAL ENGINEER	ENGINEER
NORTH CAROLINA PROFESSIONAL SEAL 29869 ENGINEER JANE C CLEE	
SIGNATURE DATE	SIGNATURE DATE

PREPARED BY: EJS	DATE: 8/12
REVIEWED BY: SCC	DATE: 8/12

GEOTECHNICAL ENGINEERING UNIT

- ☐ EASTERN REGIONAL OFFICE
- ☒ WESTERN REGIONAL OFFICE
- ☐ CONTRACT OFFICE

STATE OF NORTH CAROLINA
DEPARTMENT OF TRANSPORTATION
RALEIGH

SHEET PILE WALL CONSTRUCTION DETAILS

REVISIONS						SHEET NO.
NO.	BY	DATE	NO.	BY	DATE	
1			3			TOTAL SHEETS
2			4			

PROJECT NO.: BD-5114N
GRAHAM *COUNTY*
STATION: 11+57.66 -L- TO 11+95.03 -L-
SHEET 2 OF 4

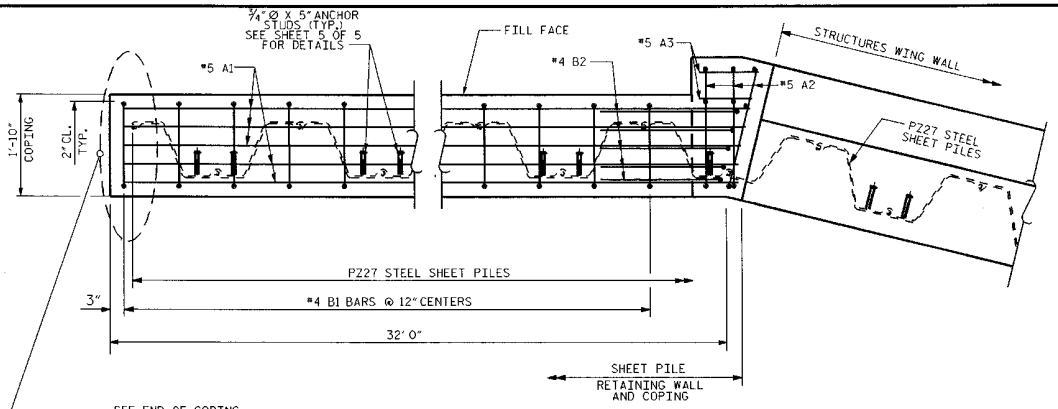

PLAN

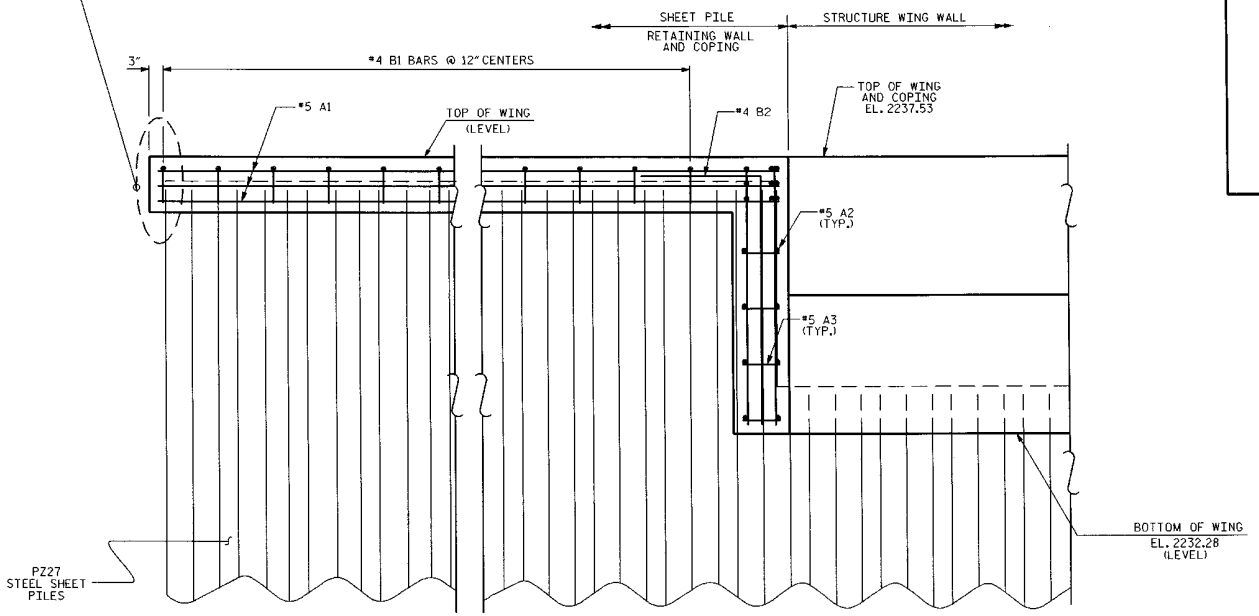

ELEVATION

BAR TYPES

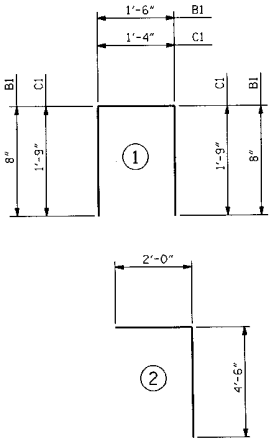

ALL BAR DIMENSIONS ARE OUT TO OUT.

BILL OF MATERIAL

BAR	NO.	SIZE	TYPE	LENGTH	WEIGHT
A1	9	#5	STR	33'-0"	310
A2	21	#5	STR	2'-2"	47
A3	14	#5	STR	1'-3"	18
B1	32	#4	1	2'-10"	61
B2	5	#4	2	6'-6"	22
C1	2	#5	1	4'-10"	10

REINFORCING STEEL 468 LBS.

CLASS A CONCRETE BREAKDOWN

WALL COPING AND WING WALL TO RETAINING WALL TRANSITION 62.5 C.Y.

TOTAL CLASS A CONCRETE 62.5 C.Y.

18" STEEL SHEET PILES

NO. PZ27 = 22

TOTAL NO. = 22 420 SQ.FT.

NO. PZ90 = 1

NO. 135° CONNECTOR = 1

GEOTECHNICAL ENGINEER

NORTH CAROLINA PROFESSIONAL SEAL 29869 ENGINEER SHANE C. CLARK

SIGNATURE DATE

ENGINEER

SIGNATURE DATE

PREPARED BY: EJS	DATE: 8/12
REVIEWED BY: SCC	DATE: 8/12

GEOTECHNICAL ENGINEERING UNIT

☐ EASTERN REGIONAL OFFICE
☒ WESTERN REGIONAL OFFICE
☐ CONTRACT OFFICE

STATE OF NORTH CAROLINA
DEPARTMENT OF TRANSPORTATION
RALEIGH

PROJECT NO.: BD-5114N

GRAHAM COUNTY

STATION: 11+57.66 -L- TO 11+95.03 -L-

SHEET 3 OF 4

SHEET PILE WALL CONSTRUCTION DETAILS

REVISIONS						SHEET NO.
NO.	BY	DATE	NO.	BY	DATE	
1			3			TOTAL SHEETS
2			4			

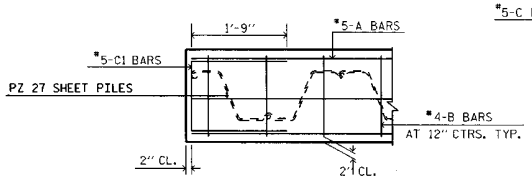

TOP VIEW

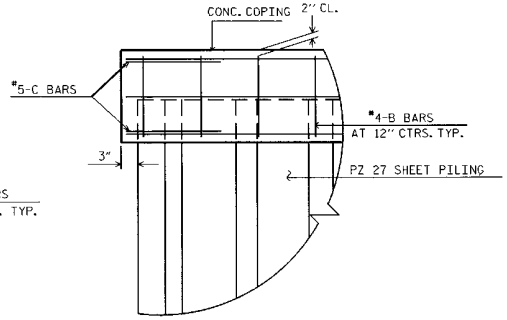

FRONT VIEW

END OF COPING DETAILS

N. T. S.

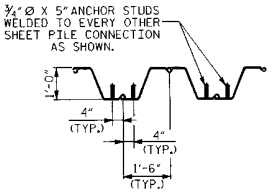

ANCHOR STUD DETAIL

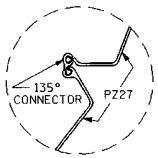

DETAIL "E"

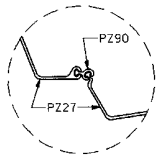

DETAIL "F"

NOTES

FOR 18" STEEL SHEET PILES, SEE SECTION 1084-2 OF THE STANDARD SPECIFICATIONS.

STEEL SHEET PILES SHALL BE EMBEDDED A MINIMUM OF 0'-9" INTO COPING.

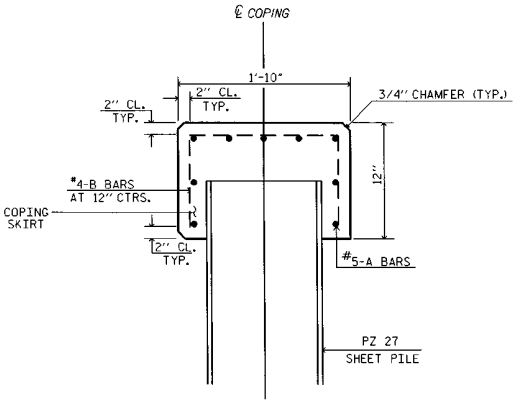

FULL COPING DETAIL

N. T. S.

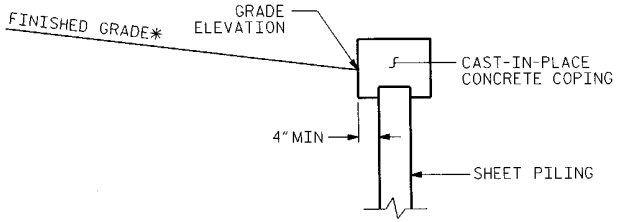

COPING DETAILS

*SEE ROADWAY PLANS FOR FINISHED GRADE DETAILS.

GEOTECHNICAL ENGINEER

ENGINEER

NORTH CAROLINA PROFESSIONAL SEAL 29869 ENGINEER SHANE C CLARK

SIGNATURE DATE

SIGNATURE DATE

PROJECT NO.: BD-5114N

GRAHAM COUNTY

STATION: 11+57.66 -L- TO 11+95.03 -L-

SHEET 4 OF 4

GEOTECHNICAL ENGINEERING UNIT

☐ EASTERN REGIONAL OFFICE

☒ WESTERN REGIONAL OFFICE

☐ CONTRACT OFFICE

STATE OF NORTH CAROLINA
DEPARTMENT OF TRANSPORTATION
RALEIGH

SHEET PILE WALL CONSTRUCTION DETAILS

REVISIONS

NO.	BY	DATE	NO.	BY	DATE
1			3		
2			4		

SHEET NO.

TOTAL SHEETS

PREPARED BY: EJS	DATE: 8/12
REVIEWED BY: SCC	DATE: 8/12

STANDARD NOTES

DESIGN DATA:

SPECIFICATIONS	A.A.S.H.T.O. (CURRENT)
LIVE LOAD	SEE PLANS
IMPACT ALLOWANCE	SEE A.A.S.H.T.O.
STRESS IN EXTREME FIBER OF	
STRUCTURAL STEEL - AASHTO M270 GRADE 36	20,000 LBS. PER SQ. IN.
- AASHTO M270 GRADE 50W	27,000 LBS. PER SQ. IN.
- AASHTO M270 GRADE 50	27,000 LBS. PER SQ. IN.
REINFORCING STEEL IN TENSION	
GRADE 60	24,000 LBS. PER SQ. IN.
CONCRETE IN COMPRESSION	1,200 LBS. PER SQ. IN.
CONCRETE IN SHEAR	SEE A.A.S.H.T.O.
STRUCTURAL TIMBER - TREATED OR	
UNTREATED - EXTREME FIBER STRESS	1,800 LBS. PER SQ. IN.
COMPRESSION PERPENDICULAR TO GRAIN OF TIMBER	375 LBS. PER SQ. IN.
EQUIVALENT FLUID PRESSURE OF EARTH	30 LBS. PER CU. FT. (MINIMUM)

MATERIAL AND WORKMANSHIP:

EXCEPT AS MAY OTHERWISE BE SPECIFIED ON PLANS OR IN THE SPECIAL PROVISIONS, ALL MATERIAL AND WORKMANSHIP SHALL BE IN ACCORDANCE WITH THE 2012 "STANDARD SPECIFICATIONS FOR ROADS AND STRUCTURES" OF THE N. C. DEPARTMENT OF TRANSPORTATION.

STEEL SHEET PILING FOR PERMANENT OR TEMPORARY APPLICATIONS SHALL BE HOT ROLLED.

CONCRETE:

UNLESS OTHERWISE REQUIRED ON PLANS, CLASS A CONCRETE SHALL BE USED FOR ALL PORTIONS OF ALL STRUCTURES WITH THE EXCEPTION THAT: CLASS AA CONCRETE SHALL BE USED IN BRIDGE SUPERSTRUCTURES, ABUTMENT BACKWALLS, AND APPROACH SLABS; AND CLASS B CONCRETE SHALL BE USED FOR SLOPE PROTECTION AND RIP RAP.

CONCRETE CHAMFERS:

UNLESS OTHERWISE NOTED ON THE PLANS, ALL EXPOSED CORNERS ON STRUCTURES SHALL BE CHAMFERED 3/4" WITH THE FOLLOWING EXCEPTIONS: TOP CORNERS OF CURBS MAY BE ROUNDED TO 1-1/2" RADIUS WHICH IS BUILT INTO CURB FORMS; CORNERS OF TRANSVERSE FLOOR EXPANSION JOINTS SHALL BE ROUNDED WITH A 1/4" FINISHING TOOL UNLESS OTHERWISE REQUIRED ON PLANS; AND CORNERS OF EXPANSION JOINTS IN THE ROADWAY FACES AND TOPS OF CURBS AND SIDEWALKS SHALL BE ROUNDED TO A 1/4" RADIUS WITH A FINISHING STONE OR TOOL UNLESS OTHERWISE REQUIRED ON PLANS.

DOWELS:

DOWELS WHEN INDICATED ON PLANS AS FOR CULVERT EXTENSIONS, SHALL BE EMBEDDED AT LEAST 12" INTO THE OLD CONCRETE AND GROUTED INTO PLACE WITH 1:2 CEMENT MORTAR.

ALLOWANCE FOR DEAD LOAD DEFLECTION, SETTLEMENT, ETC. IN CASTING SUPERSTRUCTURES:

BRIDGES SHALL BE BUILT ON THE GRADE OR VERTICAL CURVE SHOWN ON PLANS. SLABS, CURBS AND PARAPETS SHALL CONFORM TO THE GRADE OR CURVE.

ALL DIMENSIONS WHICH ARE GIVEN IN SECTION AND ARE AFFECTED BY DEAD LOAD DEFLECTIONS ARE DIMENSIONS AT CENTER LINE OF BEARING UNLESS OTHERWISE NOTED ON PLANS. IN SETTING FORMS FOR STEEL BEAM BRIDGES AND PRESTRESSED CONCRETE GIRDER BRIDGES, ADJUSTMENTS SHALL BE MADE DUE TO THE DEAD LOAD DEFLECTIONS FOR THE ELEVATIONS SHOWN. WHERE BLOCKS ARE SHOWN OVER BEAMS FOR BUILDING UP TO THE SLAB, THE VERTICAL DIMENSIONS OF THE BLOCKS SHALL BE ADJUSTED BETWEEN BEARINGS TO COMPENSATE FOR DEAD LOAD DEFLECTIONS, VERTICAL CURVE ORDINATE, AND ACTUAL BEAM CAMBER. WHERE BOTTOM OF SLAB IS IN LINE WITH BOTTOM OF TOP FLANGES, DEPTH OF SLAB BETWEEN BEARINGS SHALL BE ADJUSTED TO COMPENSATE FOR DEAD LOAD DEFLECTION, VERTICAL CURVE ORDINATE, AND ACTUAL BEAM CAMBER.

IN SETTING FALSEWORK AND FORMS FOR REINFORCED CONCRETE SPANS, AN ALLOWANCE SHALL BE MADE FOR DEAD LOAD DEFLECTIONS, SETTLEMENT OF FALSEWORK, AND PERMANENT CAMBER WHICH SHALL BE PROVIDED FOR IN ADDITION TO THE ELEVATIONS SHOWN. AFTER REMOVAL OF THE FALSEWORK, THE FINISHED STRUCTURES SHALL CONFORM TO THE PROFILE AND ELEVATIONS SHOWN ON THE PLANS AND CONSTRUCTION ELEVATIONS FURNISHED BY THE ENGINEER.

DETAILED DRAWINGS FOR FALSEWORK OR FORMS FOR BRIDGE SUPERSTRUCTURE AND ANY STRUCTURE OR PARTS OF A STRUCTURE AS NOTED ON THE PLANS SHALL BE SUBMITTED TO THE ENGINEER FOR APPROVAL BEFORE CONSTRUCTION OF THE FALSEWORK OR FORMS IS STARTED.

REINFORCING STEEL:

ALL REINFORCING STEEL SHALL BE DEFORMED. DIMENSIONS RELATIVE TO PLACEMENT OF REINFORCING ARE TO CENTERS OF BARS UNLESS OTHERWISE INDICATED IN THE PLANS. DIMENSIONS ON BAR DETAILS ARE TO CENTERS OF BARS OR ARE OUT TO OUT AS INDICATED ON PLANS.

WIRE BAR SUPPORTS SHALL BE PROVIDED FOR REINFORCING STEEL WHERE INDICATED ON THE PLANS. WHEN BAR SUPPORT PIECES ARE PLACED IN CONTINUOUS LINES, THEY SHALL BE SO PLACED THAT THE ENDS OF THE SUPPORTING WIRES SHALL BE LAPPED TO LOCK LEGS ON ADJOINING PIECES.

STRUCTURAL STEEL:

AT THE CONTRACTOR'S OPTION, HE MAY SUBSTITUTE 7/8" Ø SHEAR STUDS FOR THE ¾" Ø STUDS SPECIFIED ON THE PLANS. THIS SUBSTITUTION SHALL BE MADE AT THE RATE OF 3 - 7/8" Ø STUDS FOR 4 - 3/4" Ø STUDS, AND STUD SPACING CHANGES SHALL BE MADE AS NECESSARY TO PROVIDE THE SAME EQUIVALENT NUMBER OF 7/8" Ø STUDS ALONG THE BEAM AS SHOWN FOR 3/4" Ø STUDS BASED ON THE RATIO OF 3 - 7/8" Ø STUDS FOR 4 - 3/4" Ø STUDS. STUDS OF THE LENGTH SPECIFIED ON THE PLANS MUST BE PROVIDED. THE MAXIMUM SPACING SHALL BE 2'-0".

EXCEPT AT THE INTERIOR SUPPORTS OF CONTINUOUS BEAMS WHERE THE COVER PLATE IS IN CONTACT WITH BEARING PLATE, THE CONTRACTOR MAY, AT HIS OPTION, SUBSTITUTE FOR THE COVER PLATES DESIGNATED ON THE PLANS COVER PLATES OF THE EQUIVALENT AREA PROVIDED THESE PLATES ARE AT LEAST 5/16" IN THICKNESS AND DO NOT EXCEED A WIDTH EQUAL TO THE FLANGE WIDTH LESS 2" OR A THICKNESS EQUAL TO 2 TIMES THE FLANGE THICKNESS. THE SIZE OF FILLET WELDS SHALL CONFORM TO THE REQUIREMENTS OF THE CURRENT ANSI/AASHTO/AWS "BRIDGE WELDING CODE". ELECTROSLAG WELDING WILL NOT BE PERMITTED.

WITH THE SOLE EXCEPTION OF EDGES AT SURFACES WHICH BEAR ON OTHER SURFACES, ALL SHARP EDGES AND ENDS OF SHAPES AND PLATES SHALL BE SLIGHTLY ROUNDED BY SUITABLE MEANS TO A RADIUS OF APPROXIMATELY 1/16 INCH OR EQUIVALENT FLAT SURFACE AT A SUITABLE ANGLE PRIOR TO PAINTING, GALVANIZING, OR METALLIZING.

HANDRAILS AND POSTS:

METAL STANDARDS AND FACES OF THE CONCRETE END POSTS FOR THE METAL RAIL SHALL BE SET NORMAL TO THE GRADE OF THE CURB, UNLESS OTHERWISE SHOWN ON PLANS. THE METAL RAIL AND TOPS OF CONCRETE POSTS USED WITH THE ALUMINUM RAIL SHALL BE BUILT PARALLEL TO THE GRADE OF THE CURB.

METAL HANDRAILS SHALL BE IN ACCORDANCE WITH THE PLANS. RAILS SHALL BE AS MANUFACTURED FOR BRIDGE RAILING. CASTINGS SHALL BE OF A UNIFORM APPEARANCE. FINS AND OTHER DEFORMATIONS RESULTING FROM CASTING OR OTHERWISE SHALL BE REMOVED IN A MANNER SO THAT A UNIFORM COLORING OF THE COMPLETED CASTING SHALL BE OBTAINED. CASTINGS WITH DISCOLORATIONS OR OF NON-UNIFORM COLORING WILL NOT BE ACCEPTED. CERTIFIED MILL REPORTS ARE REQUIRED FOR METAL RAILS AND POSTS.

SPECIAL NOTES:

GENERALLY, IN CASE OF DISCREPANCY, THIS STANDARD SHEET OF NOTES SHALL GOVERN OVER THE SPECIFICATIONS, BUT THE REMAINDER OF THE PLANS SHALL GOVERN OVER NOTES HEREON, AND SPECIAL PROVISIONS SHALL GOVERN OVER ALL. SEE SPECIFICATIONS ARTICLE 105-4.

ENGLISH

JANUARY, 1990

REV. 6-16-95 EEM ω RGW REV. 5-7-03 RWW ω JTE REV. 10-1-11 MAA ω GM
REV. 8-16-99 RWW ω LES REV. 5-1-06 TLA ω GM