CONTRACT: DN00149 TIP PROJECT: 17BP.14.R.16

STATE OF NORTH CAROLINA
DIVISION OF HIGHWAYS

JACKSON COUNTY

STATE	STATE PROJECT REFERENCE NO.		SHEET NO.	TOTAL SHEETS
N.C.	17BP.14.R.16		TS-01	
STATE PROJ. NO.	F.A. PROJ. NO.	DESCRIPTION		
17BP.14.R.16		PE, R/W, UTIL		
17BP.14.R.16		CONST		

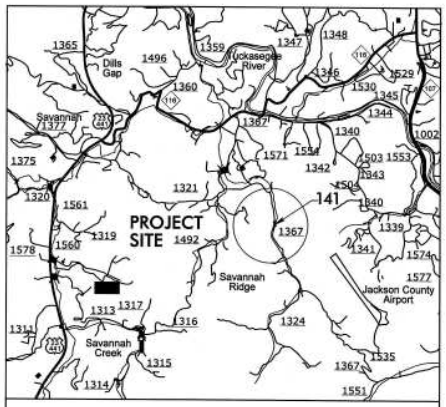

VICINITY MAP

LOCATION: BRIDGE NO. 141 OVER LITTLE SAVANNAH CREEK ON SR 1367 (LITTLE SAVANNAH CREEK RD)

TYPE OF WORK: GRADING, DRAINAGE, PAVING AND STRUCTURE

CULVERT

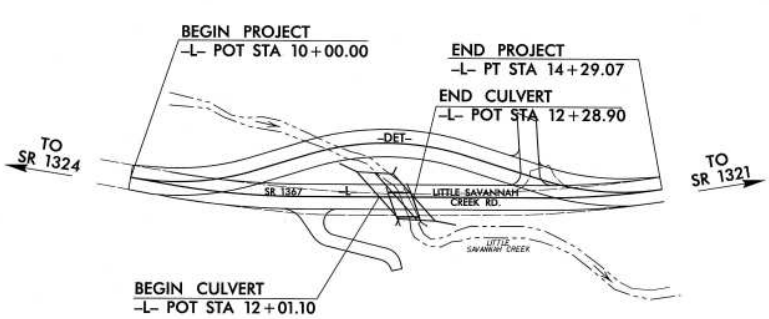

NAD 83/
NSRS 2007

CLEARING ON THIS PROJECT SHALL BE PERFORMED TO THE LIMITS ESTABLISHED BY METHOD II.
THIS PROJECT IS NOT WITHIN ANY MUNICIPAL BOUNDARIES.

DESIGN DATA

ADT XXXX = 50
V = 40 MPH
FUNC CLASS = LOCAL
SUB-REGIONAL TIER

PROJECT LENGTH

LENGTH ROADWAY STATE PROJECT 17BP.14.R.16 = 0.074 MILES
LENGTH STRUCTURES STATE PROJECT 17BP.14.R.16 = 0.008 MILES
TOTAL LENGTH STATE PROJECT 17BP.14.R.16 = 0.081 MILES

NCDOT CONTACT: JOSHUA DEYTON, PE
PROJECT ENGINEER

Prepared In the Office of:
AECOM
NC FIRM LICENSE No: F-0342
701 Corporate Center Drive, Suite 475
Raleigh, NC 27607
(919) 854-6200 - (919) 854-6259(FAX)

2012 STANDARD SPECIFICATIONS

RIGHT OF WAY DATE:

LETTING DATE: FY 2013

LEN HILL, PE
PROJECT ENGINEER

PAUL SCHRUM, PE
PROJECT DESIGN ENGINEER

BRIDGE ENGINEER

SIGNATURE: John C. Morrison P.E.

DIVISION OF HIGHWAYS
STATE OF NORTH CAROLINA

P.E.
STATE HIGHWAY DESIGN ENGINEER

lz2605.AN
d:\pwworking\ncdot\jzhang\d0238772\400_Tech_Info_Disc_Files\450_NCDOTStdTechDesFiles\BRG_MI\Structures\BMI_Str_TitleSht.dgn
lzhang2

BENCH MARK: BM#1 - CHISELED SQUARE IN THE SE CORNER OF A CONCRETE DRIVE.
-BL- STA. 8+80.93, 26.37' LEFT
ELEV. 2168.78, NAVD 1988

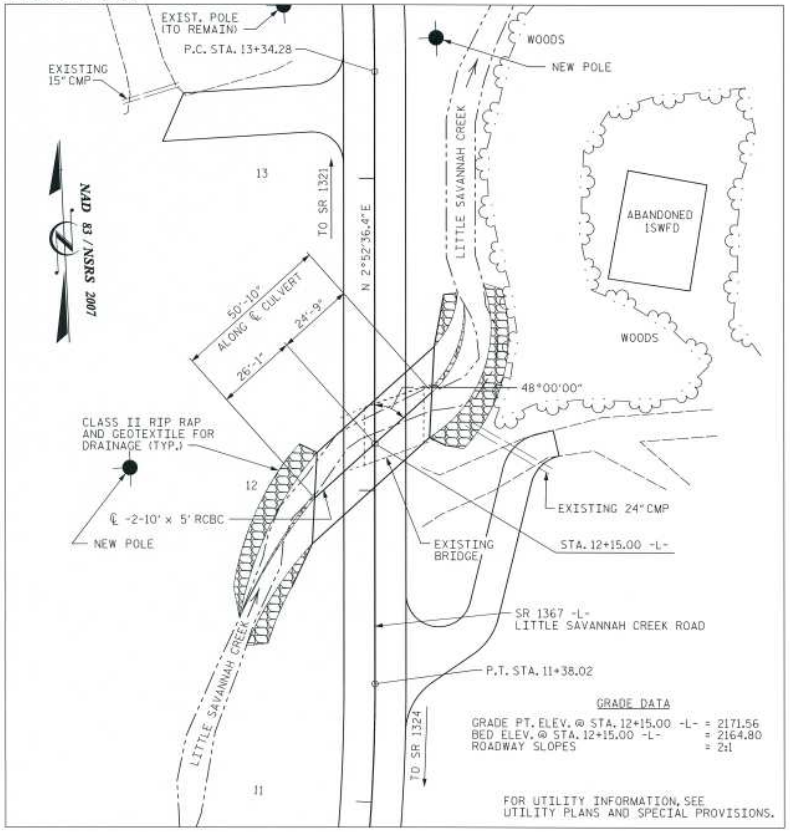

LOCATION SKETCH

HYDRAULIC DATA

DESIGN DISCHARGE	500 CFS
FREQUENCY OF DESIGN FLOOD	10 YR.
DESIGN HIGH WATER ELEVATION	2172.10
DRAINAGE AREA	2.10 SQ. MI.
BASE DISCHARGE (Q 100)	1000 CFS
BASE HIGH WATER ELEVATION	2173.70

OVERTOPPING FLOOD DATA

OVERTOPPING DISCHARGE	520 CFS
FREQUENCY OF OVERTOPPING FLOOD	10+/- YR.
OVERTOPPING FLOOD ELEVATION	2171.20

I HEARBY CERTIFY THESE PLANS ARE THE AS-BUILT PLANS

NOTES:

ASSUMED LIVE LOAD ---------- HL-93 OR ALTERNATE LOADING.

DESIGN FILL---------- 0.5 FT.

THE EXISTING STRUCTURE CONSISTING OF 1 @ 18'-6" SPAN, 19'± CLEAR ROADWAY WIDTH, TIMBER FLOOR ON TIMBER JOIST, ON TIMBER CAPS W/ TIMBER POSTS AND SILLS AND LOCATED AT EXISTING CROSSING FOR PROPOSED STRUCTURE, SHALL BE REMOVED. THE EXISTING BRIDGE IS PRESNTLY POSTED BELOW THE LEGAL LOAD LIMIT. SHOULD THE STRUCTURAL INTEGRITY OF THE BRIDGE FURTHER DETERIORATE, THIS LOAD LIMITATION MAY BE REDUCED AS FOUND NECESSARY DURING THE LIFE OF THE PROJECT.

FOR OTHER DESIGN DATA AND GENERAL NOTES, SEE SHEET SN.

3" Ø WEEP HOLES INDICATED TO BE IN ACCORDANCE WITH THE SPECIFICATIONS.

CONCRETE IN CULVERTS TO BE POURED IN THE FOLLOWING ORDER:

1. WING FOOTINGS AND FLOOR SLAB INCLUDING 4" OF ALL VERTICAL WALLS.
2. THE REMAINING PORTIONS OF THE WALLS AND WINGS FULL HEIGHT FOLLOWED BY ROOF SLAB AND HEADWALLS.

THE RESIDENT ENGINEER SHALL CHECK THE LENGTH OF CULVERT BEFORE STAKING IT OUT TO MAKE CERTAIN THAT IT WILL PROPERLY TAKE CARE OF THE FILL.

DIMENSIONS FOR WING LAYOUT AS WELL AS ADDITIONAL REINFORCING STEEL EMBEDDED IN BARREL ARE SHOWN ON WING SHEET.

STEEL IN THE BOTTOM SLAB MAY BE SPLICED AT THE PERMITTED CONSTRUCTION JOINT AT THE CONTRACTOR'S OPTION. EXTRA WEIGHT OF STEEL DUE TO THE SPLICES SHALL BE PAID FOR BY CONTRACTOR.

AT THE CONTRACTOR'S OPTION, HE MAY SPLICE THE VERTICAL REINFORCING STEEL IN THE INTERIOR FACE OF EXTERIOR WALL AND BOTH FACES OF INTERIOR WALLS ABOVE LOWER WALL CONSTRUCTION JOINT. THE SPLICE LENGTH SHALL BE AS PROVIDED IN THE SPLICE LENGTH CHART SHOWN ON THE PLANS. EXTRA WEIGHT OF STEEL DUE TO THE SPLICES SHALL BE PAID FOR BY THE CONTRACTOR.

AT THE CONTRACTOR'S OPTION HE MAY SUBMIT, TO THE ENGINEER FOR APPROVAL, DESIGN AND DETAIL DRAWINGS FOR A PRECAST REINFORCED CONCRETE BOX CULVERT IN LIEU OF THE CAST-IN-PLACE CULVERT SHOWN ON THE PLANS. THE DESIGN SHALL PROVIDE THE SAME SIZE AND NUMBER OF BARRELS AS USED ON THE CAST-IN-PLACE DESIGN. THIS OPTION WILL BE AT NO ADDITIONAL COST TO THE DEPARTMENT. FOR PRECAST REINFORCED CONCRETE BOX CULVERT, SEE SPECIAL PROVISIONS.

EXCAVATE 1.75 FEET BELOW THE BARREL AND FOOTINGS AND REPLACE WITH FOUNDATION CONDITIONING MATERIAL.

BACKFILL BOTH BARRELS WITH NATIVE BED MATERIAL SIMILAR IN SIZE TO CLASS 'B' RIP RAP. SUBSIDIZE WITH CLASS 'B' RIP RAP IF NEEDED.

FOR GROUT FOR STRUCTURES, SEE SPECIAL PROVISIONS.

FOR FALSEWORK AND FORMWORK, SEE SPECIAL PROVISIONS.

FOR CRANE SAFETY, SEE SPECIAL PROVISIONS.

FOR CULVERT DIVERSION DETAILS, SEE EROSION CONRTOL PLANS.

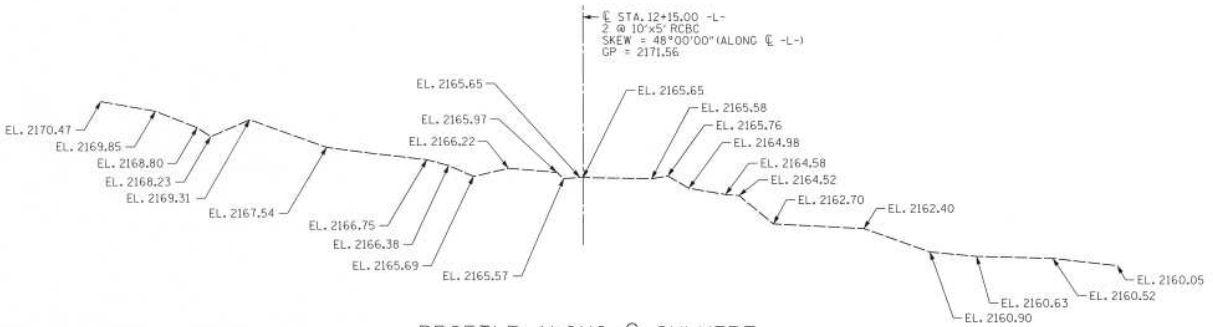

PROFILE ALONG ℄ CULVERT

TOTAL STRUCTURE QUANTITIES

CLASS AA (BRIDGE) CONCRETE		
BARREL @ 1.957 CY/FT	99.5	C.Y.
CLASS A (CULVERT) CONCRETE		
WING ETC.	22.2	C.Y.
REINFORCING STEEL		
BARREL	16965	LBS.
WINGS ETC.	938	LBS.
TOTAL	17903	LBS.
FOUNDATION CONDITIONING MATERIAL	163.3	TONS
CULVERT EXCAVATION	LUMP SUM	

PROJECT NO. 17BP.14.R.16

JACKSON COUNTY

STATION: 12+15.00 -L-

REPLACES BRIDGE NO. 141

AECOM
AECOM TECHNICAL SERVICES, INC.
701 CORPORATE CENTER DRIVE, SUITE 475
RALEIGH, NC 27607
(919) 854-6200 www.aecom.com
AECOM License No. F-0342

NORTH CAROLINA PROFESSIONAL SEAL 030474 ENGINEER JOHN C. MORRISSEY
5/6/13

STATE OF NORTH CAROLINA
DEPARTMENT OF TRANSPORTATION
RALEIGH

SR 1367 OVER
LITTLE SAVANNAH CREEK

DOUBLE 10 FT. X 5 FT.
CONCRETE BOX CULVERT
48° SKEW

REVISIONS						SHEET NO.
NO.	BY:	DATE:	NO.	BY:	DATE:	S-01
						TOTAL SHEETS

DRAWN BY : MTB DATE : 10/12
CHECKED BY : JCM DATE : 10/12

USER: lewood
DGN: C:\WORKING\17BP.14.R.16_SR1367_LittleSavannahCreek\Structure\BRG_Location.dgn
DATE: 5/6/2013
TIME: 10:54:42 AM

LOAD AND RESISTANCE FACTOR RATING (LRFR) SUMMARY FOR REINFORCED CONCRETE BOX CULVERTS

LEVEL		VEHICLE	WEIGHT (W) (TONS)	CONTROLLING LOAD RATING (#)	MINIMUM RATING FACTORS (RF)	TONS = W x RF	STRENGTH I LIMIT STATE									COMMENT NUMBER
								MOMENT				SHEAR				
							LIVE-LOAD FACTORS (γ_{LL})	RATING FACTOR	BOX NO.	ELEMENT TYPE	DISTANCE FROM LEFT END OF ELEMENT (ft)	RATING FACTOR	BOX NO.	ELEMENT TYPE	DISTANCE FROM LEFT END OF ELEMENT (ft)	
DESIGN LOAD RATING		HL-93 (INVENTORY)	N/A	(1)	1.19	--	1.75	1.34	1	TOP SLAB	10.50	1.19	1	BOTT. SLAB	1.00	
		HL-93 (OPERATING)	N/A		1.54	--	1.35	1.73	1	TOP SLAB	10.50	1.54	1	BOTT. SLAB	1.00	
		HS-20 (INVENTORY)	36.000	(2)	1.23	44.28	1.75	1.39	1	TOP SLAB	10.50	1.23	1	BOTT. SLAB	1.00	
		HS-20 (OPERATING)	36.000		1.58	56.88	1.35	1.79	1	TOP SLAB	10.50	1.58	1	BOTT. SLAB	1.00	
LEGAL LOAD RATING	SINGLE VEHICLE (SV)	SNSH	13.500		1.25	16.88	1.40	1.78	1	TOP SLAB	10.50	1.25	1	TOP SLAB	10.50	
		SNGARBS2	20.000		1.26	25.20	1.40	1.78	1	TOP SLAB	10.50	1.26	1	TOP SLAB	10.50	
		SNAGRIS2	22.000		1.20	26.40	1.40	1.83	1	TOP SLAB	10.50	1.20	1	TOP SLAB	10.50	
		SNCOTTS3	27.250		1.40	38.15	1.40	1.55	1	TOP SLAB	10.50	1.40	1	BOTT. SLAB	1.00	
		SNAGGRS4	34.925		1.33	46.45	1.40	1.70	1	TOP SLAB	10.50	1.33	1	TOP SLAB	10.50	
		SNS5A	35.550		1.38	49.06	1.40	1.66	1	TOP SLAB	10.50	1.38	1	TOP SLAB	10.50	
		SNS6A	39.950		1.34	53.53	1.40	1.69	1	TOP SLAB	10.50	1.34	1	TOP SLAB	10.50	
		SNS7B	42.000		1.34	56.28	1.40	1.67	1	TOP SLAB	10.50	1.34	1	TOP SLAB	10.50	
	TRUCK TRACTOR SEMI-TRAILER (TTST)	TNAGRIT3	33.000	(3)	1.18	38.94	1.40	1.85	1	TOP SLAB	10.50	1.18	1	TOP SLAB	10.50	
		TNT4A	33.075		1.33	43.99	1.40	1.70	1	TOP SLAB	10.50	1.33	1	TOP SLAB	10.50	
		TNT6A	41.600		1.37	56.99	1.40	1.66	1	TOP SLAB	10.50	1.37	1	TOP SLAB	10.50	
		TNT7A	42.000		1.34	56.28	1.40	1.69	1	TOP SLAB	10.50	1.34	1	TOP SLAB	10.50	
		TNT7B	42.000		1.39	58.38	1.40	1.65	1	TOP SLAB	10.50	1.39	1	TOP SLAB	10.50	
		TNAGRIT4	43.000		1.28	55.04	1.40	1.75	1	TOP SLAB	10.50	1.28	1	TOP SLAB	10.50	
		TNAGT5A	45.000		1.31	58.95	1.40	1.73	1	TOP SLAB	10.50	1.31	1	TOP SLAB	10.50	
		TNAGT5B	45.000		1.30	58.50	1.40	1.73	1	TOP SLAB	10.50	1.30	1	TOP SLAB	10.50	

LOAD FACTORS:

DESIGN LOAD RATING FACTORS

LOAD TYPE	MAX FACTOR	MIN FACTOR
DC	1.25	0.90
DW	1.50	0.65
EV	1.30	0.90
EH	1.35	0.90
ES	1.35	0.90
LS	1.75	--
WA	1.00	--

NOTE:
RATING FACTORS ARE BASED ON THE STRENGTH I LIMIT STATE.

(#) CONTROLLING LOAD RATING
(1) DESIGN LOAD RATING (HL-93)
(2) DESIGN LOAD RATING (HS-20)
(3) LEGAL LOAD RATING **
** SEE CHART FOR VEHICLE TYPE

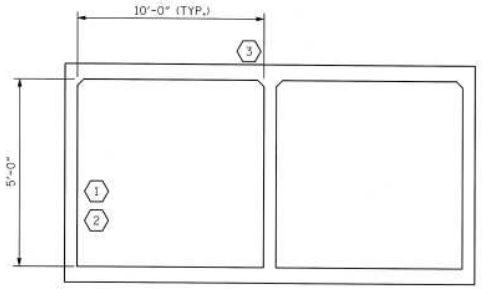

LRFR SUMMARY
(LOOKING DOWNSTREAM)

PROJECT NO. 17BP.14.R.16
JACKSON COUNTY
STATION: 12+15.00 -L-

AECOM
AECOM TECHNICAL SERVICES, INC.
701 CORPORATE CENTER DRIVE, SUITE 475
RALEIGH, NC 27607
(919) 854-6200 FAX (919) 854-6259 www.aecom.com
AECOM License No. P-0342

NORTH CAROLINA PROFESSIONAL SEAL 030474 ENGINEER JOHN C. MORRISON
4/16/13

STATE OF NORTH CAROLINA
DEPARTMENT OF TRANSPORTATION
RALEIGH
STANDARD
LRFR SUMMARY FOR REINFORCED CONCRETE BOX CULVERTS
(NON-INTERSTATE TRAFFIC)

REVISIONS						SHEET NO.
NO.	BY:	DATE:	NO.	BY:	DATE:	S-02
						TOTAL SHEETS

STD. NO. LRFRS

ASSEMBLED BY : MTB DATE : 10/12
CHECKED BY : JCM DATE : 10/12
DRAWN BY : WMC 7/13
CHECKED BY : GM 7/13
REV. 10/1/13 MAA/GM

(DATE: 4/25/2013 TIME: 10:04:19 AM)

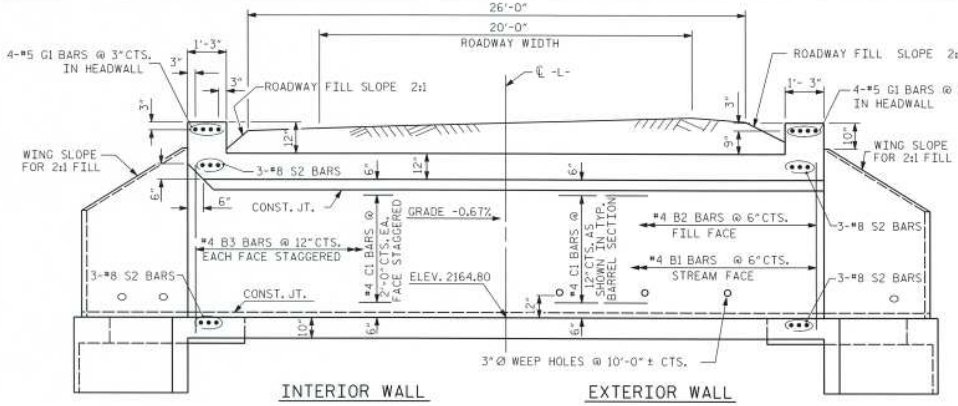

CULVERT SECTION NORMAL TO ROADWAY

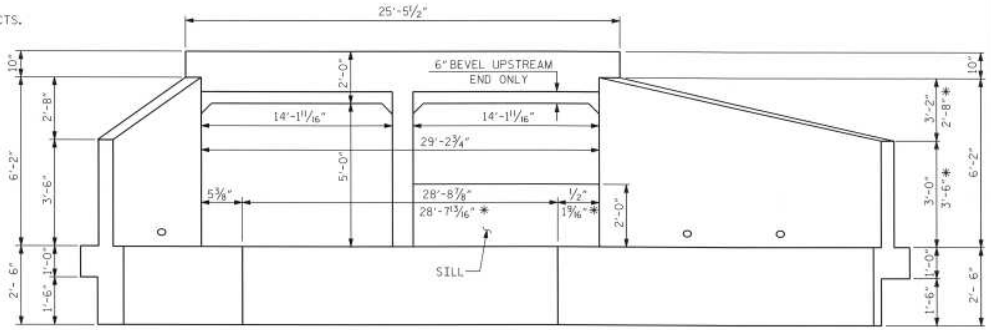

END ELEVATION NORMAL TO SKEW

(LOOKING UPSTREAM)

*DIMENSIONS AT END ELEVATION LOOKING DOWNSTREAM

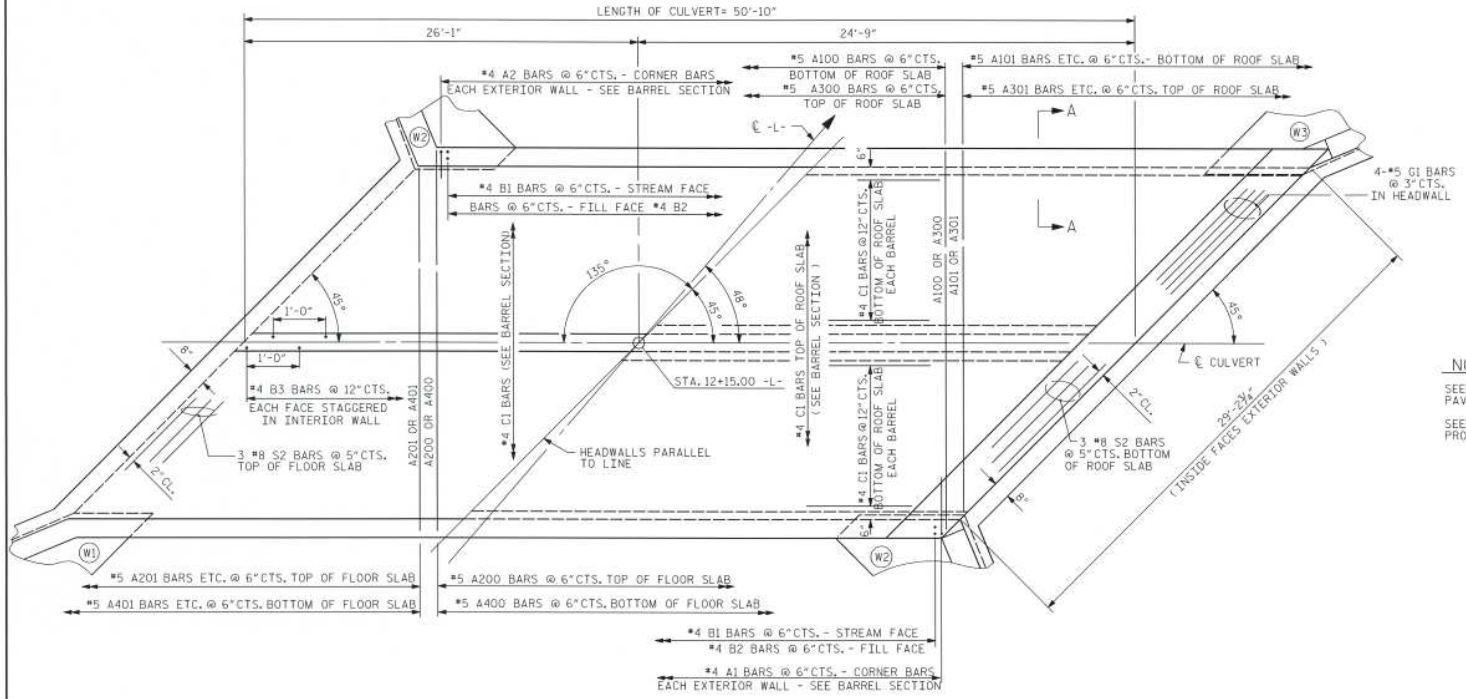

PART PLAN - FLOOR SLAB

PART PLAN - ROOF SLAB

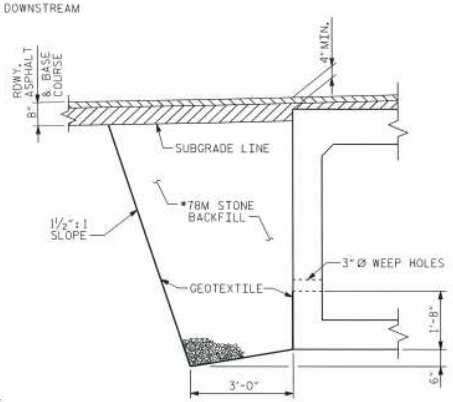

SECTION A-A

(ALONG NORTH SIDE ONLY)

NOTES:

SEE ROADWAY PLANS FOR PAVEMENT COURSES.

SEE ROADWAY PLANS FOR PROFILES AND CROSS SLOPES.

PROJECT NO. 17BP.14.R.16

JACKSON **COUNTY**

STATION: 12+15.00 -L-

AECOM

AECOM TECHNICAL SERVICES, INC.
701 CORPORATE CENTER DRIVE, SUITE 475
RALEIGH, NC 27607
(919) 854-6200 www.aecom.com
AECOM License No. F-0342

NORTH CAROLINA PROFESSIONAL SEAL 030474 ENGINEER JOHN C. MORRISON
5/6/13

STATE OF NORTH CAROLINA
DEPARTMENT OF TRANSPORTATION
RALEIGH

DOUBLE 10 FT. X 5 FT. CONCRETE BOX CULVERT WITH VERTICAL CLEARANCE OF LESS THAN 8 FT. 45° SKEW

REVISIONS							SHEET NO.
NO.	BY:	DATE:	NO.	BY:	DATE:		S-03
1			3				TOTAL SHEETS
2			4				

DRAWN BY : MTB DATE : 10/12
CHECKED BY : JCM DATE : 10/12

REINFORCING STEEL SCHEDULE

BAR	NO.	SIZE	TYPE	LENGTH	WEIGHT	BAR	NO.	SIZE	TYPE	LENGTH	WEIGHT	BAR	NO.	SIZE	TYPE	LENGTH	WEIGHT
A1	196	#4	①	5'-0"	655	A234	2	#5	STR	5'-2"	11	A429	2	#5	STR	7'-8"	16
A2	196	#4	①	4'-9"	622	A235	2	#5	STR	4'-8"	10	A430	2	#5	STR	7'-2"	15
						A236	2	#5	STR	4'-2"	9	A431	2	#5	STR	6'-8"	14
						A237	2	#5	STR	3'-8"	8	A432	2	#5	STR	6'-2"	13
A100	57	#5	STR	22'-0"	1308	A238	2	#5	STR	3'-2"	7	A433	2	#5	STR	5'-8"	12
A101	2	#5	STR	21'-8"	45	A239	2	#5	STR	2'-8"	6	A434	2	#5	STR	5'-2"	11
A102	2	#5	STR	21'-2"	44	A240	2	#5	STR	2'-2"	5	A435	2	#5	STR	4'-8"	10
A103	2	#5	STR	20'-8"	43	A241	2	#5	STR	1'-8"	3	A436	2	#5	STR	4'-2"	9
A104	2	#5	STR	20'-2"	42							A437	2	#5	STR	3'-8"	8
A105	2	#5	STR	19'-8"	41	A300	57	#5	STR	22'-0"	1308	A438	2	#5	STR	3'-2"	7
A106	2	#5	STR	19'-2"	40	A301	2	#5	STR	21'-8"	45	A439	2	#5	STR	2'-8"	6
A107	2	#5	STR	18'-8"	39	A302	2	#5	STR	21'-2"	44	A440	2	#5	STR	2'-2"	5
A108	2	#5	STR	18'-2"	38	A303	2	#5	STR	20'-8"	43	A441	2	#5	STR	1'-8"	3
A109	2	#5	STR	17'-8"	37	A304	2	#5	STR	20'-2"	42						
A110	2	#5	STR	17'-2"	36	A305	2	#5	STR	19'-8"	41	B1	202	#4	STR	6'-5"	866
A111	2	#5	STR	16'-8"	35	A306	2	#5	STR	19'-2"	40	B2	202	#4	STR	4'-2"	562
A112	2	#5	STR	16'-2"	34	A307	2	#5	STR	18'-8"	39	B3	102	#4	STR	6'-5"	437
A113	2	#5	STR	15'-8"	33	A308	2	#5	STR	18'-2"	38						
A114	2	#5	STR	15'-2"	32	A309	2	#5	STR	17'-8"	37	C1	218	#4	STR	26'-1"	3798
A115	2	#5	STR	14'-8"	31	A310	2	#5	STR	17'-2"	36						
A116	2	#5	STR	14'-2"	30	A311	2	#5	STR	16'-8"	35	D1	10	#6	STR	2'-5"	36
A117	2	#5	STR	13'-8"	29	A312	2	#5	STR	16'-2"	34						
A118	2	#5	STR	13'-2"	27	A313	2	#5	STR	15'-8"	33	G1	8	#5	STR	31'-1"	259
A119	2	#5	STR	12'-8"	26	A314	2	#5	STR	15'-2"	32						
A120	2	#5	STR	12'-2"	25	A315	2	#5	STR	14'-8"	31	S2	6	#8	STR	31'-1"	498
A121	2	#5	STR	11'-8"	24	A316	2	#5	STR	14'-2"	30						
A122	2	#5	STR	11'-2"	23	A317	2	#5	STR	13'-8"	29	TOTAL REINFORCING STEEL					16965
A123	2	#5	STR	10'-8"	22	A318	2	#5	STR	13'-2"	27						
A124	2	#5	STR	10'-2"	21	A319	2	#5	STR	12'-8"	26	CLASS AA (BRIDGE) CONCRETE BARREL					99.5 CY
A125	2	#5	STR	9'-8"	20	A320	2	#5	STR	12'-2"	25						
A126	2	#5	STR	9'-2"	19	A321	2	#5	STR	11'-8"	24						
A127	2	#5	STR	8'-8"	18	A322	2	#5	STR	11'-2"	23						
A128	2	#5	STR	8'-2"	17	A323	2	#5	STR	10'-8"	22						
A129	2	#5	STR	7'-8"	16	A324	2	#5	STR	10'-2"	21						
A130	2	#5	STR	7'-2"	15	A325	2	#5	STR	9'-8"	20						
A131	2	#5	STR	6'-8"	14	A326	2	#5	STR	9'-2"	19						
A132	2	#5	STR	6'-2"	13	A327	2	#5	STR	8'-8"	18						
A133	2	#5	STR	5'-8"	12	A328	2	#5	STR	8'-2"	17						
A134	2	#5	STR	5'-2"	11	A329	2	#5	STR	7'-8"	16						
A135	2	#5	STR	4'-8"	10	A330	2	#5	STR	7'-2"	15						
A136	2	#5	STR	4'-2"	9	A331	2	#5	STR	6'-8"	14						
A137	2	#5	STR	3'-8"	8	A332	2	#5	STR	6'-2"	13						
A138	2	#5	STR	3'-2"	7	A333	2	#5	STR	5'-8"	12						
A139	2	#5	STR	2'-8"	6	A334	2	#5	STR	5'-2"	11						
A140	2	#5	STR	2'-2"	5	A335	2	#5	STR	4'-8"	10						
A141	2	#5	STR	1'-8"	3	A336	2	#5	STR	4'-2"	9						
						A337	2	#5	STR	3'-8"	8						
A200	57	#5	STR	22'-0"	1308	A338	2	#5	STR	3'-2"	7						
A201	2	#5	STR	21'-8"	44	A339	2	#5	STR	2'-8"	6						
A202	2	#5	STR	21'-2"	43	A340	2	#5	STR	2'-2"	5						
A203	2	#5	STR	20'-8"	42	A341	2	#5	STR	1'-8"	3						
A204	2	#5	STR	20'-2"	41												
A205	2	#5	STR	19'-8"	40	A400	57	#5	STR	22'-0"	1308						
A206	2	#5	STR	19'-2"	39	A401	2	#5	STR	21'-8"	45						
A207	2	#5	STR	18'-8"	38	A402	2	#5	STR	21'-2"	44						
A208	2	#5	STR	18'-2"	37	A403	2	#5	STR	20'-8"	43						
A209	2	#5	STR	17'-8"	36	A404	2	#5	STR	20'-2"	42						
A210	2	#5	STR	17'-2"	35	A405	2	#5	STR	19'-8"	41						
A211	2	#5	STR	16'-8"	34	A406	2	#5	STR	19'-2"	40						
A212	2	#5	STR	16'-2"	33	A407	2	#5	STR	18'-8"	39						
A213	2	#5	STR	15'-8"	32	A408	2	#5	STR	18'-2"	38						
A214	2	#5	STR	15'-2"	31	A409	2	#5	STR	17'-8"	37						
A215	2	#5	STR	14'-8"	30	A410	2	#5	STR	17'-2"	36						
A216	2	#5	STR	14'-2"	29	A411	2	#5	STR	16'-8"	35						
A217	2	#5	STR	13'-8"	27	A412	2	#5	STR	16'-2"	34						
A218	2	#5	STR	13'-2"	26	A413	2	#5	STR	15'-8"	33						
A219	2	#5	STR	12'-8"	25	A414	2	#5	STR	15'-2"	32						
A220	2	#5	STR	12'-2"	24	A415	2	#5	STR	14'-8"	31						
A221	2	#5	STR	11'-8"	23	A416	2	#5	STR	14'-2"	30						
A222	2	#5	STR	11'-2"	22	A417	2	#5	STR	13'-8"	29						
A223	2	#5	STR	10'-8"	21	A418	2	#5	STR	13'-2"	27						
A224	2	#5	STR	10'-2"	20	A419	2	#5	STR	12'-8"	26						
A225	2	#5	STR	9'-8"	19	A420	2	#5	STR	12'-2"	25						
A226	2	#5	STR	9'-2"	18	A421	2	#5	STR	11'-8"	24						
A227	2	#5	STR	8'-8"	17	A422	2	#5	STR	11'-2"	23						
A228	2	#5	STR	8'-2"	16	A423	2	#5	STR	10'-8"	22						
A229	2	#5	STR	7'-8"	15	A424	2	#5	STR	10'-2"	21						
A230	2	#5	STR	7'-2"	14	A425	2	#5	STR	9'-8"	20						
A231	2	#5	STR	6'-8"	13	A426	2	#5	STR	9'-2"	19						
A232	2	#5	STR	6'-2"	12	A427	2	#5	STR	8'-8"	18						
A233	2	#5	STR	5'-8"	11	A428	2	#5	STR	8'-2"	17						

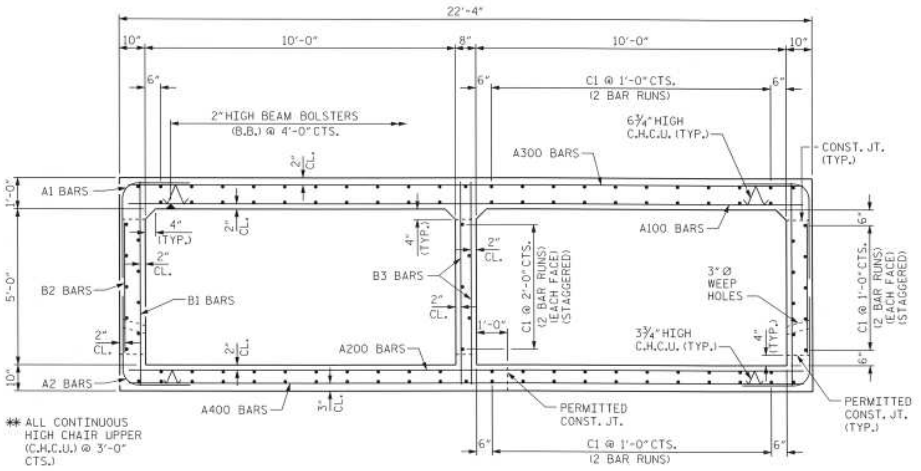

RIGHT ANGLE SECTION OF BARREL

(THERE ARE 109 "C" BARS IN SECTION OF BARREL)

SPLICE LENGTH CHART

BAR SIZE	SPLICE LENGTH
#4	1'-9"
#5	2'-2"
#6	2'-9"
#8	4'-11"

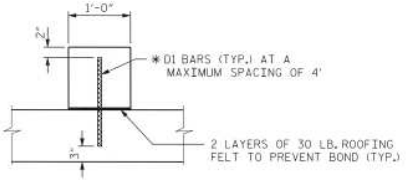

* D1 BARS MAY BE PUSHED INTO GREEN CONCRETE AFTER SLAB HAS BEEN FLOAT FINISHED.

SECTION THROUGH SILL

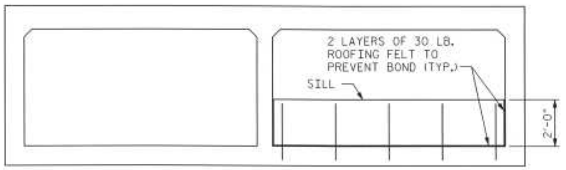

ELEVATION - LOOKING UPSTREAM

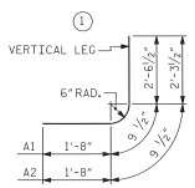

BAR TYPE

BAR DIMENSIONS ARE OUT TO OUT

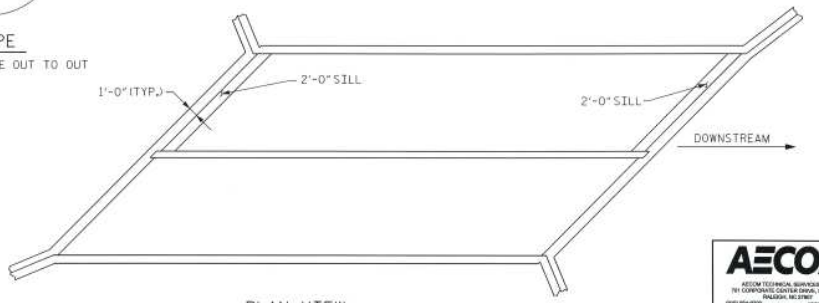

PLAN VIEW

CULVERT SILL DETAILS

DRAWN BY : MTB DATE : 10/12
CHECKED BY : JCM DATE : 10/12

PROJECT NO. 17BP.14.R.16

JACKSON COUNTY

STATION: 12+15.00 -L-

AECOM

AECOM TECHNICAL SERVICES, INC.
701 CORPORATE CENTER DRIVE, SUITE 475
RALEIGH, NC 27607
(919) 854-6200 www.aecom.com
AECOM License No. P-0342

NORTH CAROLINA PROFESSIONAL SEAL 030474 ENGINEER JOHN C. MORRISON
5/6/13

STATE OF NORTH CAROLINA
DEPARTMENT OF TRANSPORTATION
RALEIGH

SR 1367 OVER SAVANNAH CREEK

DOUBLE 10 FT. X 5 FT. CONCRETE BOX CULVERT 45° SKEW

REVISIONS						SHEET NO.
NO.	BY:	DATE:	NO.	BY:	DATE:	S-04
						TOTAL SHEETS

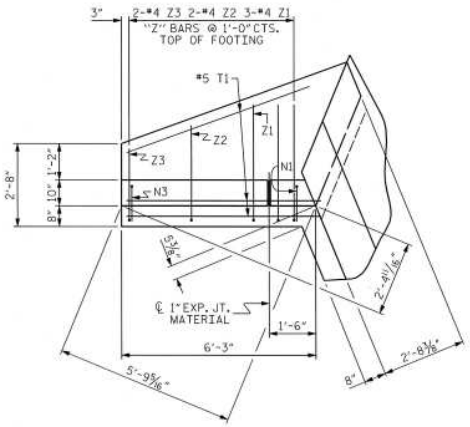

PLAN W2

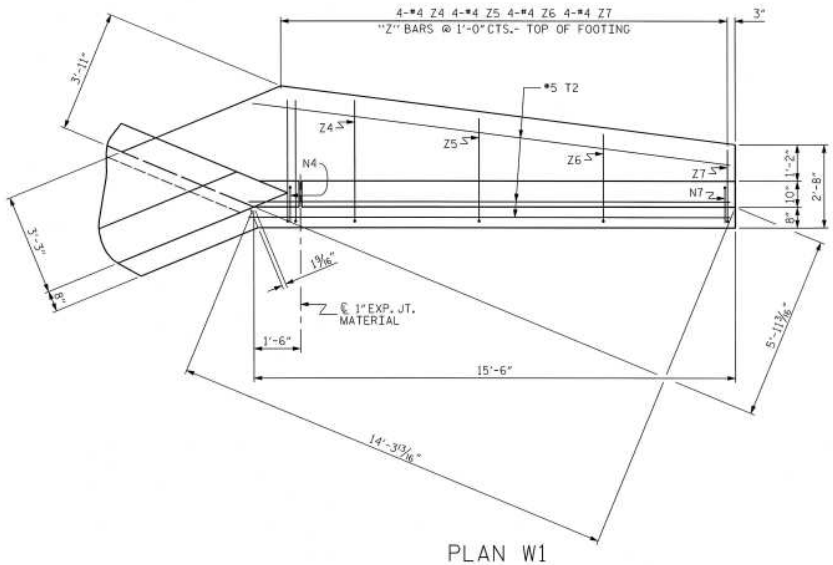

PLAN W1

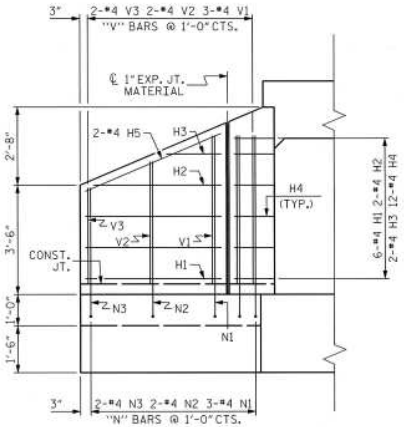

ELEVATION W2

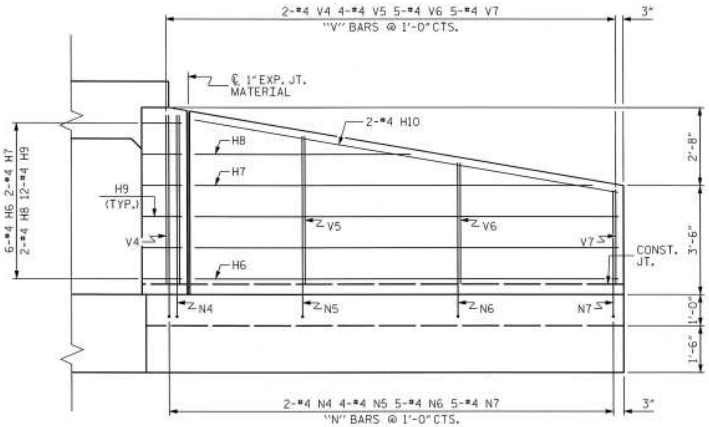

ELEVATION W1

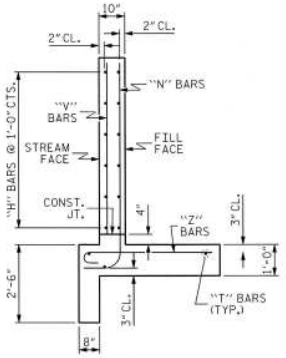

TYPICAL WING SECTION

DRAWN BY : MTB DATE : 10/12
CHECKED BY : JCM DATE : 10/12

PROJECT NO. 17BP.14.R.16
JACKSON COUNTY
STATION: 12+15.00 -L-

SHEET 1 OF 2

AECOM
AECOM TECHNICAL SERVICES, INC.
701 CORPORATE CENTER DRIVE, SUITE 475
RALEIGH, NC 27607
(919) 854-6200 www.aecom.com
AECOM License No. P-0342

NORTH CAROLINA PROFESSIONAL SEAL 030474 ENGINEER JOHN C. MORRISON
4/18/13

STATE OF NORTH CAROLINA
DEPARTMENT OF TRANSPORTATION
RALEIGH

WINGS FOR CONCRETE BOX CULVERT

H = 5'-0" SLOPE = 2:1
45° SKEW

REVISIONS						SHEET NO.
NO.	BY:	DATE:	NO.	BY:	DATE:	S-05
						TOTAL SHEETS

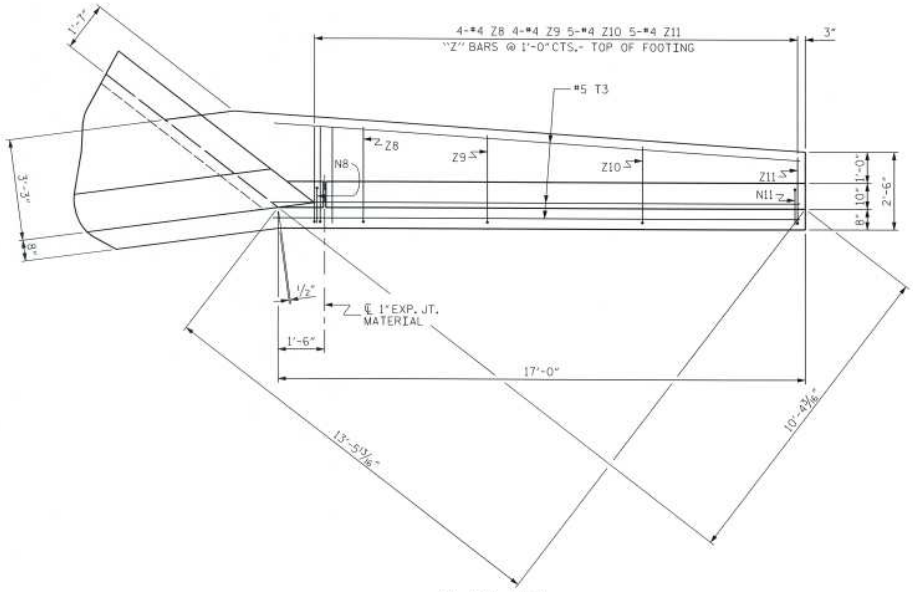

PLAN W3

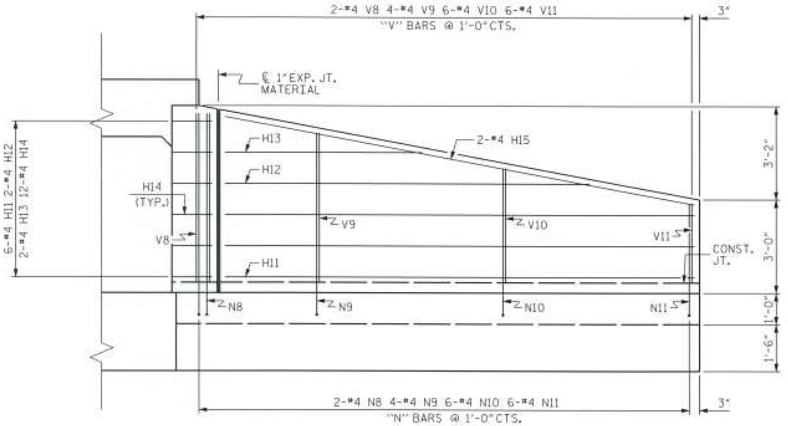

ELEVATION W3

BAR TYPES

ALL BAR DIMENSIONS ARE OUT TO OUT.

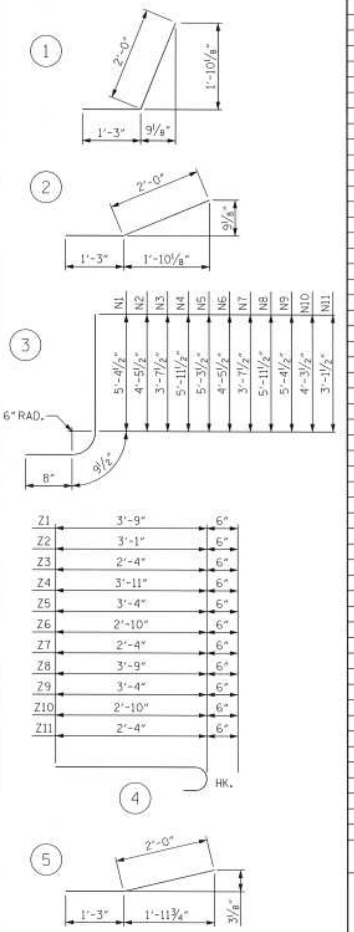

BILL OF MATERIAL

BAR	NO.	SIZE	TYPE	LENGTH	WEIGHT
H1	12	#4	STR	4'-4"	35
H2	4	#4	STR	4'-1"	11
H3	4	#4	STR	1'-9"	5
H4	24	#4	1	3'-3"	52
H5	4	#4	STR	4'-9"	13
H6	6	#4	STR	13'-7"	54
H7	2	#4	STR	12'-9"	17
H8	2	#4	STR	6'-11"	9
H9	12	#4	2	3'-3"	26
H10	2	#4	STR	13'-9"	18
H11	6	#4	STR	15'-1"	60
H12	2	#4	STR	11'-9"	16
H13	2	#4	STR	6'-4"	8
H14	12	#4	5	3'-3"	26
H15	2	#4	STR	15'-4"	20
N1	6	#4	3	6'-10"	27
N2	4	#4	3	5'-11"	16
N3	4	#4	3	5'-1"	14
N4	2	#4	3	7'-5"	10
N5	4	#4	3	6'-9"	18
N6	5	#4	3	5'-11"	20
N7	5	#4	3	5'-1"	17
N8	2	#4	3	7'-5"	10
N9	4	#4	3	6'-10"	18
N10	6	#4	3	5'-9"	23
N11	6	#4	3	4'-7"	18
T1	6	#5	STR	6'-3"	39
T2	3	#5	STR	15'-6"	48
T3	3	#5	STR	17'-0"	53
V1	6	#4	STR	4'-9"	19
V2	4	#4	STR	3'-11"	10
V3	4	#4	STR	3'-1"	8
V4	2	#4	STR	5'-5"	7
V5	4	#4	STR	4'-9"	13
V6	5	#4	STR	3'-10"	13
V7	5	#4	STR	3'-0"	10
V8	2	#4	STR	5'-5"	7
V9	4	#4	STR	4'-9"	13
V10	6	#4	STR	3'-8"	15
V11	6	#4	STR	2'-6"	10
Z1	6	#4	4	4'-3"	17
Z2	4	#4	4	3'-7"	10
Z3	4	#4	4	2'-10"	8
Z4	4	#4	4	4'-5"	12
Z5	4	#4	4	3'-10"	10
Z6	4	#4	4	3'-4"	9
Z7	4	#4	4	2'-10"	8
Z8	4	#4	4	3'-7"	10
Z9	4	#4	4	3'-4"	9
Z10	5	#4	4	3'-0"	10
Z11	5	#4	4	2'-8"	9

REINFORCING STEEL FOR 4 WINGS	938	LBS
CLASS A (CULVERT) CONCRETE		
4 WINGS	14.2	CY
2 HEADWALLS	2.9	CY
2 END CURTAIN WALLS	3.6	CY
2 SILLS	1.5	CY
TOTAL	22.2	CY

NOTE:

FOR TYPICAL WING SECTION, SEE SHEET 1 OF 2.

PROJECT NO. 17BP.14.R.16

JACKSON COUNTY

STATION: 12+15.00 -L-

SHEET 2 OF 2

AECOM

AECOM TECHNICAL SERVICES, INC.
701 CORPORATE CENTER DRIVE, SUITE 475
RALEIGH, NC 27607
(919) 854-6200
AECOM License No. F-0342

NORTH CAROLINA PROFESSIONAL SEAL 030474 ENGINEER JOHN C. MORRISON
5/6/13

STATE OF NORTH CAROLINA
DEPARTMENT OF TRANSPORTATION
RALEIGH

WING FOR CONCRETE BOX CULVERT

H = 5'-0" SLOPE = 2:1

45° SKEW

REVISIONS						SHEET NO.
NO.	BY:	DATE:	NO.	BY:	DATE:	S-06
						TOTAL SHEETS

DRAWN BY : MTB DATE : 10/12
CHECKED BY : JCM DATE : 10/12

DATE: 5/6/2013
FILE: IGA.P AM

USER: jmorgan
DGN: G:\NCDOT\ENTZD-400_Trans\Hyd_Des_ACOTT\Shtrk\dwg\ReTrieved\IGA_Z-A.MPT

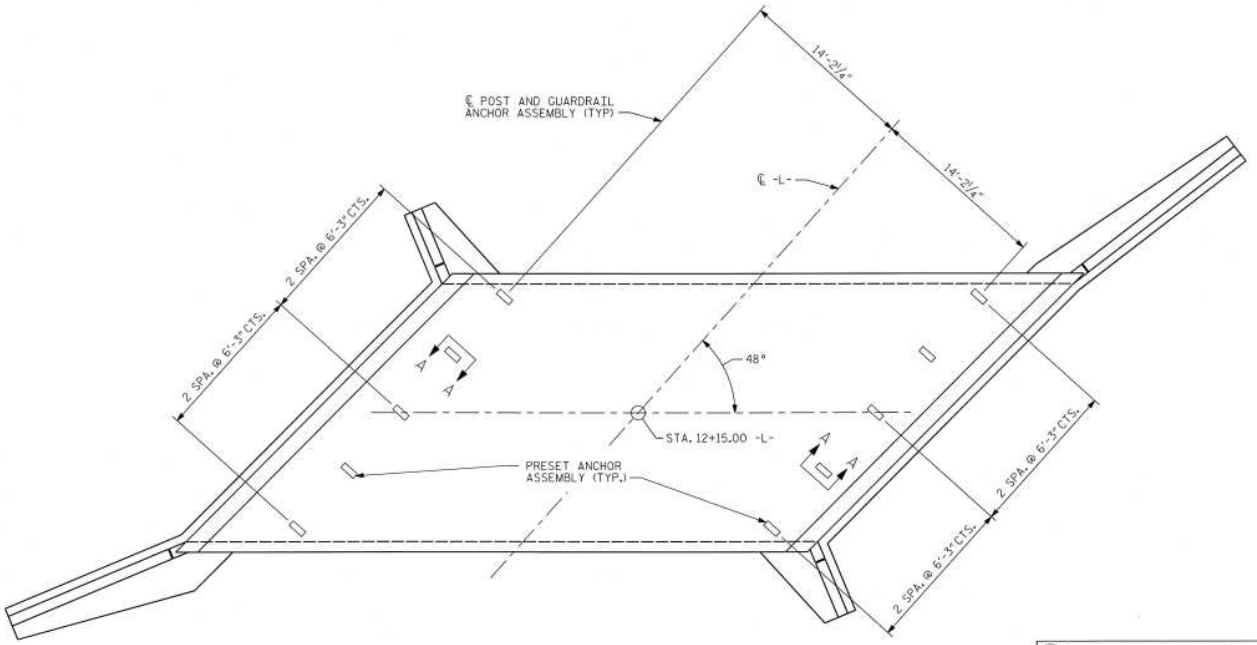

PLAN

SHOWING : GUARDRAIL ANCHOR ASSEMBLY SPACING.

NOTES

THE GUARDRAIL ANCHOR ASSEMBLY FOR CULVERTS SHALL CONSIST OF THE FOLLOWING COMPONENTS :

A. FERRULES SHALL BE MADE FROM STEEL MEETING THE REQUIREMENTS OF AASHTO M169, GRADE 12L14 AND SHALL HAVE A MINIMUM LENGTH OF THREADS OF 2½".

B. 4 - 1" Ø X 2 ¼" BOLTS WITH WASHERS. BOLTS SHALL CONFORM TO THE REQUIREMENTS OF ASTM A307. BOLTS AND WASHERS SHALL BE GALVANIZED. (AT THE CONTRACTOR'S OPTION, STAINLESS STEEL BOLTS AND WASHERS MAY BE USED AS AN ALTERNATE FOR THE 1" Ø X 2¼" GALVANIZED BOLTS AND WASHERS. THEY SHALL CONFORM TO OR EXCEED THE MECHANICAL REQUIREMENTS OF ASTM A307. THE USE OF THIS ALTERNATE SHALL BE APPROVED BY THE ENGINEER.)

C. WIRE STRUTS SHOWN IN THE GUARDRAIL ANCHOR ASSEMBLY FOR CULVERTS DETAIL ARE MINIMUM ALLOWABLE SIZE AND SHALL HAVE A MINIMUM TENSILE STRENGTH OF 100,000 P.S.I. AS AN OPTION, A 7/16" Ø WIRE STRUT WITH A MINIMUM TENSILE STRENGTH OF 90,000 PSI IS ACCEPTABLE.

GUARDRAIL ANCHOR ASSEMBLY WITH BOLTS SHALL BE ASSEMBLED IN THE SHOP. BOLT THREADS MAY BE RECUT AS NECESSARY TO INSURE FIT.

THE COST OF THE GUARDRAIL ANCHOR ASSEMBLY FOR CULVERTS COMPLETE IN PLACE, SHALL BE INCLUDED IN THE UNIT CONTRACT PRICE BID FOR CLASS "A" CONCRETE.

FERRULES TO BE PLUGGED DURING POURING OF SLAB AS RECOMMENDED BY THE MANUFACTURER.

AT THE CONTRACTOR'S OPTION, FERRULES WITH OPEN OR CLOSED ENDS MAY BE USED.

PAYMENT FOR GUARDRAIL, POSTS, AND POST BASE PLATES IS INCLUDED IN ROADWAY PAY ITEMS.

SLAB REINFORCING STEEL MAY BE SHIFTED AS NECESSARY TO CLEAR GUARDRAIL ANCHOR ASSEMBLY. CARE SHOULD BE TAKEN TO KEEP THE SHIFTING OF REINFORCING STEEL TO A MINIMUM.

THE CONTRACTOR MAY USE ADHESIVELY ANCHORED ANCHOR BOLTS IN PLACE OF GUARDRAIL ANCHOR ASSEMBLY. LEVEL TWO FIELD TESTING IS REQUIRED, AND THE YIELD LOAD OF THE 1"Ø BOLT IS 21.8 KIPS. FOR ADHESIVELY ANCHORED ANCHOR BOLTS OR DOWELS, SEE STANDARD SPECIFICATIONS.

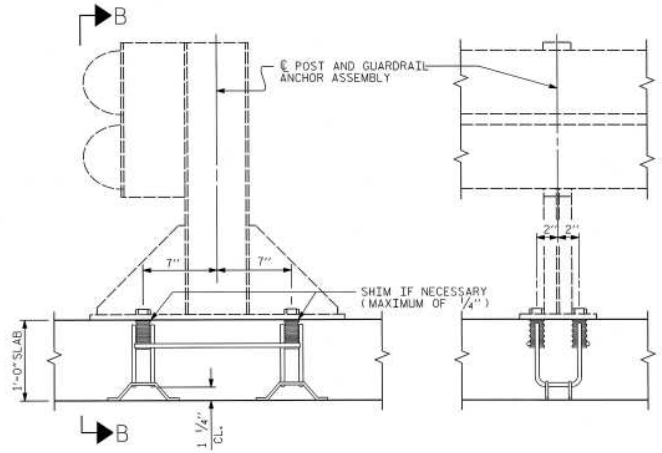

SECTION A-A

SECTION B-B

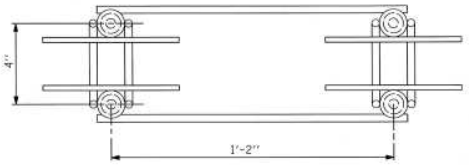

PLAN

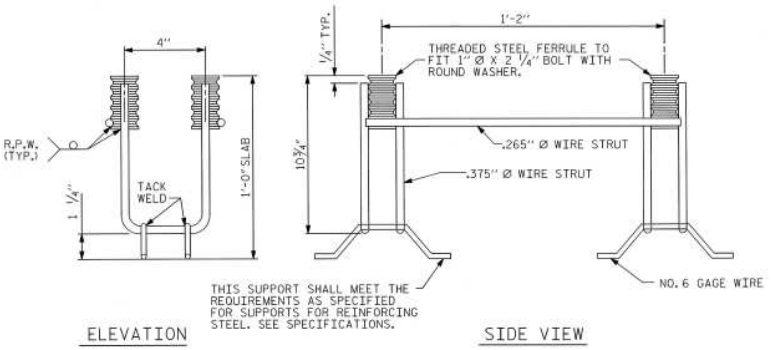

ELEVATION

SIDE VIEW

GUARDRAIL ANCHOR ASSEMBLY FOR CULVERTS

PROJECT NO. 17BP.14.R.16

JACKSON COUNTY

STATION: 12+15.00 -L-

ASSEMBLED BY : MTB	DATE : 10/12		
CHECKED BY : JCM	DATE : 10/12		
DRAWN BY : FCJ 6/88	REV. 7/10/01	LES/RDR	
CHECKED BY : ARB 6/88	REV. 5/1/03	RWW/JTE	
	REV. 5/1/06R	KMM/GM	

AECOM

AECOM TECHNICAL SERVICES, INC.
701 CORPORATE CENTER DRIVE, SUITE 475
RALEIGH, NC 27607
(919) 854-6200 www.aecom.com
AECOM License No. P-0842

NORTH CAROLINA PROFESSIONAL SEAL 030474 ENGINEER JOHN C. MORRISON

4/16/13

STATE OF NORTH CAROLINA
DEPARTMENT OF TRANSPORTATION
RALEIGH

STANDARD

ANCHORAGE DETAILS FOR GUARDRAIL ANCHOR ASSEMBLY FOR CULVERTS

REVISIONS						SHEET NO.
NO.	BY:	DATE:	NO.	BY:	DATE:	S-07
1			4			TOTAL SHEETS
2			5			
3						

STD. NO. GRA1

DATE: 4/17/2013
TIME: 8:55:07 PM

USER: tmeyer
DGN: GRADESHEET2400_Track_Data_Files\BRIDGE\STANDARDS\Structure\GRA1_grd_dtl.dgn

STANDARD NOTES

DESIGN DATA:

SPECIFICATIONS	A.A.S.H.T.O. (CURRENT)
LIVE LOAD	SEE PLANS
IMPACT ALLOWANCE	SEE A.A.S.H.T.O.
STRESS IN EXTREME FIBER OF	
STRUCTURAL STEEL - AASHTO M270 GRADE 36	20,000 LBS. PER SQ. IN.
- AASHTO M270 GRADE 50W	27,000 LBS. PER SQ. IN.
- AASHTO M270 GRADE 50	27,000 LBS. PER SQ. IN.
REINFORCING STEEL IN TENSION	
GRADE 60	24,000 LBS. PER SQ. IN.
CONCRETE IN COMPRESSION	1,200 LBS. PER SQ. IN.
CONCRETE IN SHEAR	SEE A.A.S.H.T.O.
STRUCTURAL TIMBER - TREATED OR	
UNTREATED - EXTREME FIBER STRESS	1,800 LBS. PER SQ. IN.
COMPRESSION PERPENDICULAR TO GRAIN OF TIMBER	375 LBS. PER SQ. IN.
EQUIVALENT FLUID PRESSURE OF EARTH	30 LBS. PER CU. FT. (MINIMUM)

MATERIAL AND WORKMANSHIP:

EXCEPT AS MAY OTHERWISE BE SPECIFIED ON PLANS OR IN THE SPECIAL PROVISIONS, ALL MATERIAL AND WORKMANSHIP SHALL BE IN ACCORDANCE WITH THE 2012 "STANDARD SPECIFICATIONS FOR ROADS AND STRUCTURES" OF THE N. C. DEPARTMENT OF TRANSPORTATION.

STEEL SHEET PILING FOR PERMANENT OR TEMPORARY APPLICATIONS SHALL BE HOT ROLLED.

CONCRETE:

UNLESS OTHERWISE REQUIRED ON PLANS, CLASS A CONCRETE SHALL BE USED FOR ALL PORTIONS OF ALL STRUCTURES WITH THE EXCEPTION THAT: CLASS AA CONCRETE SHALL BE USED IN BRIDGE SUPERSTRUCTURES, ABUTMENT BACKWALLS, AND APPROACH SLABS; AND CLASS B CONCRETE SHALL BE USED FOR SLOPE PROTECTION AND RIP RAP.

CONCRETE CHAMFERS:

UNLESS OTHERWISE NOTED ON THE PLANS, ALL EXPOSED CORNERS ON STRUCTURES SHALL BE CHAMFERED 3/4" WITH THE FOLLOWING EXCEPTIONS: TOP CORNERS OF CURBS MAY BE ROUNDED TO 1-1/2" RADIUS WHICH IS BUILT INTO CURB FORMS; CORNERS OF TRANSVERSE FLOOR EXPANSION JOINTS SHALL BE ROUNDED WITH A 1/4" FINISHING TOOL UNLESS OTHERWISE REQUIRED ON PLANS; AND CORNERS OF EXPANSION JOINTS IN THE ROADWAY FACES AND TOPS OF CURBS AND SIDEWALKS SHALL BE ROUNDED TO A 1/4" RADIUS WITH A FINISHING STONE OR TOOL UNLESS OTHERWISE REQUIRED ON PLANS.

DOWELS:

DOWELS WHEN INDICATED ON PLANS AS FOR CULVERT EXTENSIONS, SHALL BE EMBEDDED AT LEAST 12" INTO THE OLD CONCRETE AND GROUTED INTO PLACE WITH 1:2 CEMENT MORTAR.

ALLOWANCE FOR DEAD LOAD DEFLECTION, SETTLEMENT, ETC. IN CASTING SUPERSTRUCTURES:

BRIDGES SHALL BE BUILT ON THE GRADE OR VERTICAL CURVE SHOWN ON PLANS. SLABS, CURBS AND PARAPETS SHALL CONFORM TO THE GRADE OR CURVE.

ALL DIMENSIONS WHICH ARE GIVEN IN SECTION AND ARE AFFECTED BY DEAD LOAD DEFLECTIONS ARE DIMENSIONS AT CENTER LINE OF BEARING UNLESS OTHERWISE NOTED ON PLANS. IN SETTING FORMS FOR STEEL BEAM BRIDGES AND PRESTRESSED CONCRETE GIRDER BRIDGES, ADJUSTMENTS SHALL BE MADE DUE TO THE DEAD LOAD DEFLECTIONS FOR THE ELEVATIONS SHOWN. WHERE BLOCKS ARE SHOWN OVER BEAMS FOR BUILDING UP TO THE SLAB, THE VERTICAL DIMENSIONS OF THE BLOCKS SHALL BE ADJUSTED BETWEEN BEARINGS TO COMPENSATE FOR DEAD LOAD DEFLECTIONS, VERTICAL CURVE ORDINATE, AND ACTUAL BEAM CAMBER. WHERE BOTTOM OF SLAB IS IN LINE WITH BOTTOM OF TOP FLANGES, DEPTH OF SLAB BETWEEN BEARINGS SHALL BE ADJUSTED TO COMPENSATE FOR DEAD LOAD DEFLECTION, VERTICAL CURVE ORDINATE, AND ACTUAL BEAM CAMBER.

IN SETTING FALSEWORK AND FORMS FOR REINFORCED CONCRETE SPANS, AN ALLOWANCE SHALL BE MADE FOR DEAD LOAD DEFLECTIONS, SETTLEMENT OF FALSEWORK, AND PERMANENT CAMBER WHICH SHALL BE PROVIDED FOR IN ADDITION TO THE ELEVATIONS SHOWN. AFTER REMOVAL OF THE FALSEWORK, THE FINISHED STRUCTURES SHALL CONFORM TO THE PROFILE AND ELEVATIONS SHOWN ON THE PLANS AND CONSTRUCTION ELEVATIONS FURNISHED BY THE ENGINEER.

DETAILED DRAWINGS FOR FALSEWORK OR FORMS FOR BRIDGE SUPERSTRUCTURE AND ANY STRUCTURE OR PARTS OF A STRUCTURE AS NOTED ON THE PLANS SHALL BE SUBMITTED TO THE ENGINEER FOR APPROVAL BEFORE CONSTRUCTION OF THE FALSEWORK OR FORMS IS STARTED.

REINFORCING STEEL:

ALL REINFORCING STEEL SHALL BE DEFORMED. DIMENSIONS RELATIVE TO PLACEMENT OF REINFORCING ARE TO CENTERS OF BARS UNLESS OTHERWISE INDICATED IN THE PLANS. DIMENSIONS ON BAR DETAILS ARE TO CENTERS OF BARS OR ARE OUT TO OUT AS INDICATED ON PLANS.

WIRE BAR SUPPORTS SHALL BE PROVIDED FOR REINFORCING STEEL WHERE INDICATED ON THE PLANS. WHEN BAR SUPPORT PIECES ARE PLACED IN CONTINUOUS LINES, THEY SHALL BE SO PLACED THAT THE ENDS OF THE SUPPORTING WIRES SHALL BE LAPPED TO LOCK LEGS ON ADJOINING PIECES.

STRUCTURAL STEEL:

AT THE CONTRACTOR'S OPTION, HE MAY SUBSTITUTE 7/8" Ø SHEAR STUDS FOR THE ¾" Ø STUDS SPECIFIED ON THE PLANS. THIS SUBSTITUTION SHALL BE MADE AT THE RATE OF 3 - 7/8" Ø STUDS FOR 4 - 3/4" Ø STUDS, AND STUD SPACING CHANGES SHALL BE MADE AS NECESSARY TO PROVIDE THE SAME EQUIVALENT NUMBER OF 7/8" Ø STUDS ALONG THE BEAM AS SHOWN FOR 3/4" Ø STUDS BASED ON THE RATIO OF 3 - 7/8" Ø STUDS FOR 4 - 3/4" Ø STUDS. STUDS OF THE LENGTH SPECIFIED ON THE PLANS MUST BE PROVIDED. THE MAXIMUM SPACING SHALL BE 2'-0".

EXCEPT AT THE INTERIOR SUPPORTS OF CONTINUOUS BEAMS WHERE THE COVER PLATE IS IN CONTACT WITH BEARING PLATE, THE CONTRACTOR MAY, AT HIS OPTION, SUBSTITUTE FOR THE COVER PLATES DESIGNATED ON THE PLANS COVER PLATES OF THE EQUIVALENT AREA PROVIDED THESE PLATES ARE AT LEAST 5/16" IN THICKNESS AND DO NOT EXCEED A WIDTH EQUAL TO THE FLANGE WIDTH LESS 2" OR A THICKNESS EQUAL TO 2 TIMES THE FLANGE THICKNESS. THE SIZE OF FILLET WELDS SHALL CONFORM TO THE REQUIREMENTS OF THE CURRENT ANSI/AASHTO/AWS "BRIDGE WELDING CODE". ELECTROSLAG WELDING WILL NOT BE PERMITTED.

WITH THE SOLE EXCEPTION OF EDGES AT SURFACES WHICH BEAR ON OTHER SURFACES, ALL SHARP EDGES AND ENDS OF SHAPES AND PLATES SHALL BE SLIGHTLY ROUNDED BY SUITABLE MEANS TO A RADIUS OF APPROXIMATELY 1/16 INCH OR EQUIVALENT FLAT SURFACE AT A SUITABLE ANGLE PRIOR TO PAINTING, GALVANIZING, OR METALLIZING.

HANDRAILS AND POSTS:

METAL STANDARDS AND FACES OF THE CONCRETE END POSTS FOR THE METAL RAIL SHALL BE SET NORMAL TO THE GRADE OF THE CURB, UNLESS OTHERWISE SHOWN ON PLANS. THE METAL RAIL AND TOPS OF CONCRETE POSTS USED WITH THE ALUMINUM RAIL SHALL BE BUILT PARALLEL TO THE GRADE OF THE CURB.

METAL HANDRAILS SHALL BE IN ACCORDANCE WITH THE PLANS. RAILS SHALL BE AS MANUFACTURED FOR BRIDGE RAILING. CASTINGS SHALL BE OF A UNIFORM APPEARANCE. FINS AND OTHER DEFORMATIONS RESULTING FROM CASTING OR OTHERWISE SHALL BE REMOVED IN A MANNER SO THAT A UNIFORM COLORING OF THE COMPLETED CASTING SHALL BE OBTAINED. CASTINGS WITH DISCOLORATIONS OR OF NON-UNIFORM COLORING WILL NOT BE ACCEPTED. CERTIFIED MILL REPORTS ARE REQUIRED FOR METAL RAILS AND POSTS.

SPECIAL NOTES:

GENERALLY, IN CASE OF DISCREPANCY, THIS STANDARD SHEET OF NOTES SHALL GOVERN OVER THE SPECIFICATIONS, BUT THE REMAINDER OF THE PLANS SHALL GOVERN OVER NOTES HEREON, AND SPECIAL PROVISIONS SHALL GOVERN OVER ALL. SEE SPECIFICATIONS ARTICLE 105-4.

ENGLISH

JANUARY, 1990

STD. NO. SN

REV. 6-16-95 EEM W RDW REV. 8-16-99 RWW W LES REV. 5-7-03 RWW W JTE REV. 5-1-06 TLA W GM REV. 10-1-11 MAA W GM