TIP PROJECT: 17BP.14.R.25

CONTRACT: DN00158

See Sheet 1-A For Index of Sheets
See Sheet 1-B For Conventional Symbols

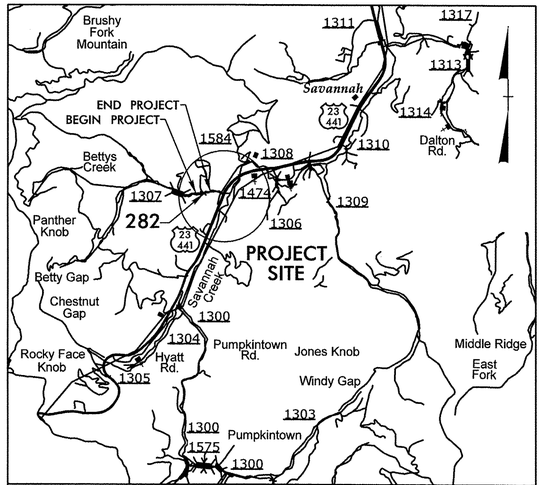

VICINITY MAP

STATE OF NORTH CAROLINA
DIVISION OF HIGHWAYS

JACKSON COUNTY

LOCATION: BRIDGE NO. 282 OVER BETTY'S CREEK ON SR 1307 (BETTY'S CREEK RD)

TYPE OF WORK: GRADING, DRAINAGE, PAVING AND STRUCTURE

STATE	STATE PROJECT REFERENCE NO.	SHEET NO.	TOTAL SHEETS
N.C.	17BP.14.R.25	1	

STATE PROJ. NO.	F.A. PROJ. NO.	DESCRIPTION
17BP.14.R.25		PE, RW, UTIL
17BP.14.R.25		CONST

NAD 83/
NSRS 2007

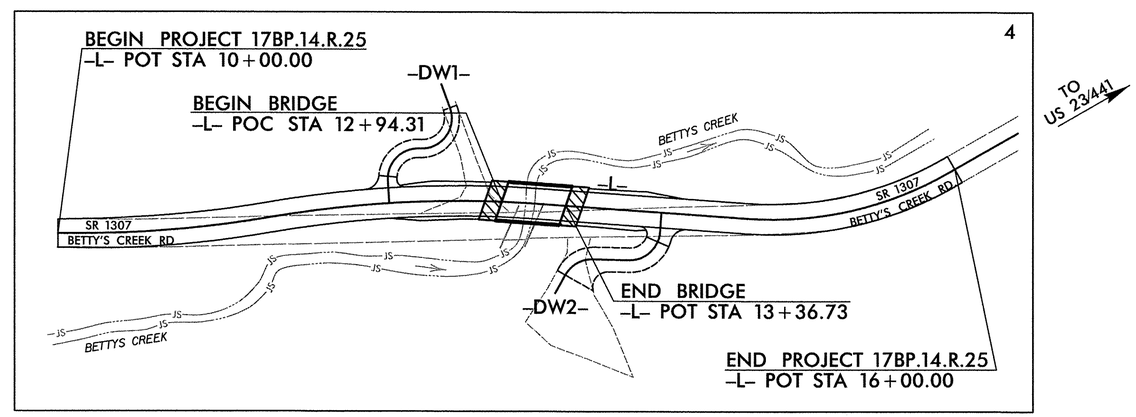

GRAPHIC SCALES

50 25 0 50 100
PLANS

50 25 0 50 100
PROFILE (HORIZONTAL)

10 5 0 10 20
PROFILE (VERTICAL)

DESIGN DATA

ADT XXXX = 240
V = 45 MPH
FUNC CLASS = LOCAL
SUB-REGIONAL TIER

PROJECT LENGTH

LENGTH ROADWAY STATE PROJECT 17BP.14.R.25 = 0.106 MILES
LENGTH STRUCTURES STATE PROJECT 17BP.14.R.25 = 0.008 MILES
TOTAL LENGTH STATE PROJECT 17BP.14.R.25 = 0.114 MILES

NCDOT CONTACT: JOSHUA DEYTON, PE
PROJECT ENGINEER

Prepared In the Office of:
AECOM
NC FIRM LICENSE No: F-0342
701 Corporate Center Drive, Suite 475
Raleigh, NC 27607
(919) 854-6200 - (919) 854-6259(FAX)

2012 STANDARD SPECIFICATIONS

RIGHT OF WAY DATE: JUNE 15, 2012

LETTING DATE: MAY 28, 2013

LEN HILL, PE
PROJECT ENGINEER

CLAUDETTE M.K. ROQUE, PE
PROJECT DESIGN ENGINEER

HYDRAULICS ENGINEER

NORTH CAROLINA PROFESSIONAL SEAL 14101 ENGINEER JOHN M. KAMPRATH

5/2/13
SIGNATURE: P.E.

ROADWAY DESIGN ENGINEER

NORTH CAROLINA PROFESSIONAL SEAL 17306 ENGINEER CLAUDETTE M.K. ROQUE

5/2/13
SIGNATURE: P.E.

DIVISION OF HIGHWAYS STATE OF NORTH CAROLINA

STATE OF NORTH CAROLINA DEPARTMENT OF TRANSPORTATION

P.E.
STATE HIGHWAY DESIGN ENGINEER

09/08/99

7:48:06 AM
R:\Roadway\Proj\49-0282_rdy_tsh.dgn
hilln

PROJECT REFERENCE NO.	SHEET NO.
17BP.14.R.25	1-A

ROADWAY DESIGN ENGINEER

NORTH CAROLINA PROFESSIONAL SEAL 17306 ENGINEER CLAUDIA M.K. ROGERS

INDEX OF SHEETS, LIST OF STANDARD DRAWINGS & GENERAL NOTES

INDEX OF SHEETS

SHEET NUMBER	SHEET
1	TITLE SHEET
1-A	INDEX OF SHEETS, GENERAL NOTES, AND LIST OF STANDARDS
1-B	CONVENTIONAL SYMBOLS
1-C	SURVEY CONTROL SHEETS
1-D	CENTERLINE COORDINATE LIST
2 THRU 2-A	TYPICAL SECTIONS, PAVEMENT SCHEDULE, AND WEDGING DETAIL
3	SUMMARY OF QUANTITIES
3-A	SUMMARY OF DRAINAGE QUANTITIES, SUMMARY OF GUARDRAIL, SUMMARY OF PAVEMENT REMOVAL, AND EARTHWORK SUMMARY
4	PLAN AND PROFILE SHEET
TMP-1 THRU TMP-4	TRANSPORTATION MANAGEMENT PLANS
PMP-1	PAVEMENT MARKING PLANS AND SIGNING PLANS
SIG-1 THRU SIG-2	TEMPORARY SIGNAL PLANS
EC-1 THRU EC-3	EROSION CONTROL PLANS
UO-1	UTILITIES BY OTHERS PLANS
X-1A	CROSS-SECTION SUMMARY SHEET
X-1 THRU X-8	CROSS-SECTIONS
TS-01	STRUCTURE PLANS TITLE SHEET
S-01 THRU S-16	STRUCTURE PLANS
SN	STRUCTURE PLANS - STANDARD NOTES SHEET

GENERAL NOTES:

2012 SPECIFICATIONS
EFFECTIVE: 01-17-12
REVISED: 07/30/12

GRADE LINE:
GRADING AND SURFACING:

THE GRADE LINES SHOWN DENOTE THE FINISHED ELEVATION OF THE PROPOSED SURFACING AT GRADE POINTS SHOWN ON THE TYPICAL SECTIONS. GRADE LINES MAY BE ADJUSTED AT THEIR BEGINNING AND ENDING AND AT STRUCTURES AS DIRECTED BY THE ENGINEER IN ORDER TO SECURE A PROPER TIE-IN.

CLEARING:

CLEARING ON THIS PROJECT SHALL BE PERFORMED TO THE LIMITS ESTABLISHED BY METHOD III.

SUPERELEVATION:

ALL CURVES ON THIS PROJECT SHALL BE SUPERELEVATED IN ACCORDANCE WITH STD. NO. 225.04 USING THE RATE OF SUPERELEVATION AND RUNOFF SHOWN ON THE PLANS. SUPERELEVATION IS TO BE REVOLVED ABOUT THE GRADE POINTS SHOWN ON THE TYPICAL SECTIONS.

SHOULDER CONSTRUCTION:

ASPHALT, EARTH, AND CONCRETE SHOULDER CONSTRUCTION ON THE HIGH SIDE OF SUPERELEVATED CURVES SHALL BE IN ACCORDANCE WITH STD. NO. 560.01.

SIDE ROADS:

THE CONTRACTOR WILL BE REQUIRED TO DO ALL NECESSARY WORK TO PROVIDE SUITABLE CONNECTIONS WITH ALL ROADS, STREETS, AND DRIVES ENTERING THIS PROJECT. THIS WORK WILL BE PAID FOR AT THE CONTRACT UNIT PRICE FOR THE PARTICULAR ITEMS INVOLVED.

GUARDRAIL:

THE GUARDRAIL LOCATIONS SHOWN ON THE PLANS MAY BE ADJUSTED DURING CONSTRUCTION AS DIRECTED BY THE ENGINEER. THE CONTRACTOR SHOULD CONSULT WITH THE ENGINEER PRIOR TO ORDERING GUARDRAIL MATERIAL.

TEMPORARY SHORING:

SHORING REQUIRED FOR THE MAINTENANCE OF TRAFFIC NOT SHOWN ON THE PLANS WILL BE PAID FOR AT THE CONTRACT PRICE FOR "TEMPORARY SHORING".

SUBSURFACE PLANS:

NO SUBSURFACE PLANS ARE AVAILABLE ON THIS PROJECT. THE CONTRACTOR SHOULD MAKE HIS OWN INVESTIGATION AS TO THE SUBSURFACE CONDITIONS.

END BENTS:

THE ENGINEER SHALL CHECK THE STRUCTURE END BENT PLANS, DETAILS, AND CROSS-SECTION PRIOR TO SETTING OF THE SLOPE STAKES FOR THE EMBANKMENT OR EXCAVATION APPROACHING A BRIDGE.

UTILITIES:

UTILITY OWNERS ON THIS PROJECT ARE DUKE ENERGY AND FRONTIER

COMMUNICATION

ANY RELOCATION OF EXISTING UTILITIES WILL BE ACCOMPLISHED BY OTHERS.

RIGHT-OF-WAY MARKERS:

ALL RIGHT-OF-WAY MARKERS ON THIS PROJECT SHALL BE PLACED BY OTHERS.

2012 ROADWAY ENGLISH STANDARD DRAWINGS

The following Roadway Standards as appear in "Roadway Standard Drawings" Highway Design Branch - N. C. Department of Transportation - Raleigh, N. C., Dated January, 2012 are applicable to this project and by reference hereby are considered a part of these plans:

STD.NO.	TITLE
DIVISION 2 - EARTHWORK	
200.03	Method of Clearing - Method III
225.02	Guide for Grading Subgrade - Secondary and Local
225.04	Method of Obtaining Superelevation - Two Lane Pavement
DIVISION 3 - PIPE CULVERTS	
300.01	Method of Pipe Installation
310.10	Driveway Pipe Construction
DIVISION 4 - MAJOR STRUCTURES	
422.11	Reinforced Bridge Approach Fills - Sub Regional Tier
DIVISION 5 - SUBGRADE, BASES AND SHOULDERS	
560.01	Method of Shoulder Construction - High Side of Superelevated Curve - Method I
DIVISION 6 - ASPHALT BASES AND PAVEMENTS	
654.01	Pavement Repairs
DIVISION 8 - INCIDENTALS	
862.01	Guardrail Placement
862.02	Guardrail Installation
862.03	Structure Anchor Units
876.04	Drainage Ditches with Class 'B' Rip Rap

PROJECT REFERENCE NO.	SHEET NO.
17BP.14.R.25	1-B

Note: Not to Scale

****S.U.E. = Subsurface Utility Engineering***

STATE OF NORTH CAROLINA
DIVISION OF HIGHWAYS

CONVENTIONAL PLAN SHEET SYMBOLS

BOUNDARIES AND PROPERTY:

- State Line
- County Line
- Township Line
- City Line
- Reservation Line
- Property Line
- Existing Iron Pin — EIP
- Property Corner
- Property Monument — ECM
- Parcel/Sequence Number — 123
- Existing Fence Line
- Proposed Woven Wire Fence
- Proposed Chain Link Fence
- Proposed Barbed Wire Fence
- Existing Wetland Boundary — WLB
- Proposed Wetland Boundary — WLB
- Existing Endangered Animal Boundary — EAB
- Existing Endangered Plant Boundary — EPB
- Known Soil Contamination: Boundary or Site
- Potential Soil Contamination: Boundary or Site

BUILDINGS AND OTHER CULTURE:

- Gas Pump Vent or U/G Tank Cap
- Sign — S
- Well — W
- Small Mine
- Foundation
- Area Outline
- Cemetery
- Building
- School
- Church
- Dam

HYDROLOGY:

- Stream or Body of Water
- Hydro, Pool or Reservoir
- Jurisdictional Stream — JS
- Buffer Zone 1 — BZ 1
- Buffer Zone 2 — BZ 2
- Flow Arrow
- Disappearing Stream
- Spring
- Wetland
- Proposed Lateral, Tail, Head Ditch — FLOW
- False Sump

RAILROADS:

- Standard Gauge — CSX TRANSPORTATION
- RR Signal Milepost — MILEPOST 35
- Switch — SWITCH
- RR Abandoned
- RR Dismantled

RIGHT OF WAY:

- Baseline Control Point
- Existing Right of Way Marker
- Existing Right of Way Line
- Proposed Right of Way Line — RW
- Proposed Right of Way Line with Iron Pin and Cap Marker — RW
- Proposed Right of Way Line with Concrete or Granite Marker — RW
- Existing Control of Access — CA
- Proposed Control of Access — CA
- Existing Easement Line — E
- Proposed Temporary Construction Easement — E
- Proposed Temporary Drainage Easement — TDE
- Proposed Permanent Drainage Easement — PDE
- Proposed Permanent Drainage / Utility Easement — DUE
- Proposed Permanent Utility Easement — PUE
- Proposed Temporary Utility Easement — TUE
- Proposed Aerial Utility Easement — AUE
- Proposed Permanent Easement with Iron Pin and Cap Marker

ROADS AND RELATED FEATURES:

- Existing Edge of Pavement
- Existing Curb
- Proposed Slope Stakes Cut — C
- Proposed Slope Stakes Fill — F
- Proposed Curb Ramp — CR
- Curb Cut Future Ramp — CCFR
- Existing Metal Guardrail
- Proposed Guardrail
- Existing Cable Guiderail
- Proposed Cable Guiderail
- Equality Symbol
- Pavement Removal

VEGETATION:

- Single Tree
- Single Shrub
- Hedge
- Woods Line
- Orchard
- Vineyard — Vineyard

EXISTING STRUCTURES:

MAJOR:

- Bridge, Tunnel or Box Culvert — CONC
- Bridge Wing Wall, Head Wall and End Wall — CONC WW

MINOR:

- Head and End Wall — CONC HW
- Pipe Culvert
- Footbridge
- Drainage Box: Catch Basin, DI or JB — CB
- Paved Ditch Gutter
- Storm Sewer Manhole — S
- Storm Sewer — S

UTILITIES:

POWER:

- Existing Power Pole
- Proposed Power Pole
- Existing Joint Use Pole
- Proposed Joint Use Pole
- Power Manhole — P
- Power Line Tower
- Power Transformer
- U/G Power Cable Hand Hole
- H-Frame Pole
- Recorded U/G Power Line — P
- Designated U/G Power Line (S.U.E.*) — P

TELEPHONE:

- Existing Telephone Pole
- Proposed Telephone Pole
- Telephone Manhole — T
- Telephone Booth
- Telephone Pedestal — T
- Telephone Cell Tower
- U/G Telephone Cable Hand Hole — HH
- Recorded U/G Telephone Cable — T
- Designated U/G Telephone Cable (S.U.E.*) — T
- Recorded U/G Telephone Conduit — TC
- Designated U/G Telephone Conduit (S.U.E.*) — TC
- Recorded U/G Fiber Optics Cable — T FO
- Designated U/G Fiber Optics Cable (S.U.E.*) — T FO

WATER:

- Water Manhole — W
- Water Meter
- Water Valve
- Water Hydrant
- Recorded U/G Water Line — W
- Designated U/G Water Line (S.U.E.*) — W
- Above Ground Water Line — A/G Water

TV:

- TV Satellite Dish
- TV Pedestal — C
- TV Tower
- U/G TV Cable Hand Hole — HH
- Recorded U/G TV Cable — TV
- Designated U/G TV Cable (S.U.E.*) — TV
- Recorded U/G Fiber Optic Cable — TV FO
- Designated U/G Fiber Optic Cable (S.U.E.*) — TV FO

GAS:

- Gas Valve
- Gas Meter
- Recorded U/G Gas Line — G
- Designated U/G Gas Line (S.U.E.*) — G
- Above Ground Gas Line — A/G Gas

SANITARY SEWER:

- Sanitary Sewer Manhole
- Sanitary Sewer Cleanout
- U/G Sanitary Sewer Line — SS
- Above Ground Sanitary Sewer — A/G Sanitary Sewer
- Recorded SS Forced Main Line — FSS
- Designated SS Forced Main Line (S.U.E.*) — FSS

MISCELLANEOUS:

- Utility Pole
- Utility Pole with Base
- Utility Located Object
- Utility Traffic Signal Box — S
- Utility Unknown U/G Line — ?UTL
- U/G Tank; Water, Gas, Oil
- Underground Storage Tank, Approx. Loc. — UST
- A/G Tank; Water, Gas, Oil
- Geoenvironmental Boring
- U/G Test Hole (S.U.E.*)
- Abandoned According to Utility Records — AATUR
- End of Information — E.O.I.

SURVEY CONTROL SHEET 490282
–FINAL–

BL

POINT	DESC.	NORTH	EAST	ELEVATION	L STATION	OFFSET
1	BL-1	587672.8360	720989.9470	2403.33	10·02.89	13.23 RT
2	BL-2	587711.7310	721250.0550	2392.37	12·65.24	3.51 RT
3	BL-3	587705.2194	721522.0486	2380.73	15·34.36	14.23 RT

****
BM1 ELEVATION = 2399.05
N 587725 E 721131
L STATION 11·50.00 23 LEFT
8" SPIKE SET IN BASE OF 18 INCH PINE
TREE
****

****
BM2 ELEVATION = 2383.18
N 587695 E 721573
L STATION 15·73.00 42 RIGHT
8" SPIKE SET IN BASE OF 42 INCH WHITE
OAK TREE
****

-FINAL- ROW MARKER PERMANENT EASEMENT-E

ALIGN	STATION	OFFSET	NORTH	EAST
L	10·80.00	-29.98	587720.8732	721062.9906
L	10·80.00	-51.00	587741.7488	721060.5312
L	11·15.00	-51.00	587746.3342	721092.7412
L	11·15.00	-30.60	587726.2131	721096.1029
L	10·69.00	24.27	587665.7514	721058.0381
L	10·80.00	44.00	587647.4013	721071.6464
L	11·41.40	52.00	587649.9125	721137.5332
L	13·16.45	59.00	587656.0724	721298.8239
L	14·57.67	49.00	587660.4900	721440.3244
L	15·26.00	54.00	587664.3432	721523.3928
L	16·00.00	50.00	587703.2229	721603.6592
L	17·45.00	52.00	587760.3368	721717.8916
L	17·45.00	22.51	587789.0834	721711.3120

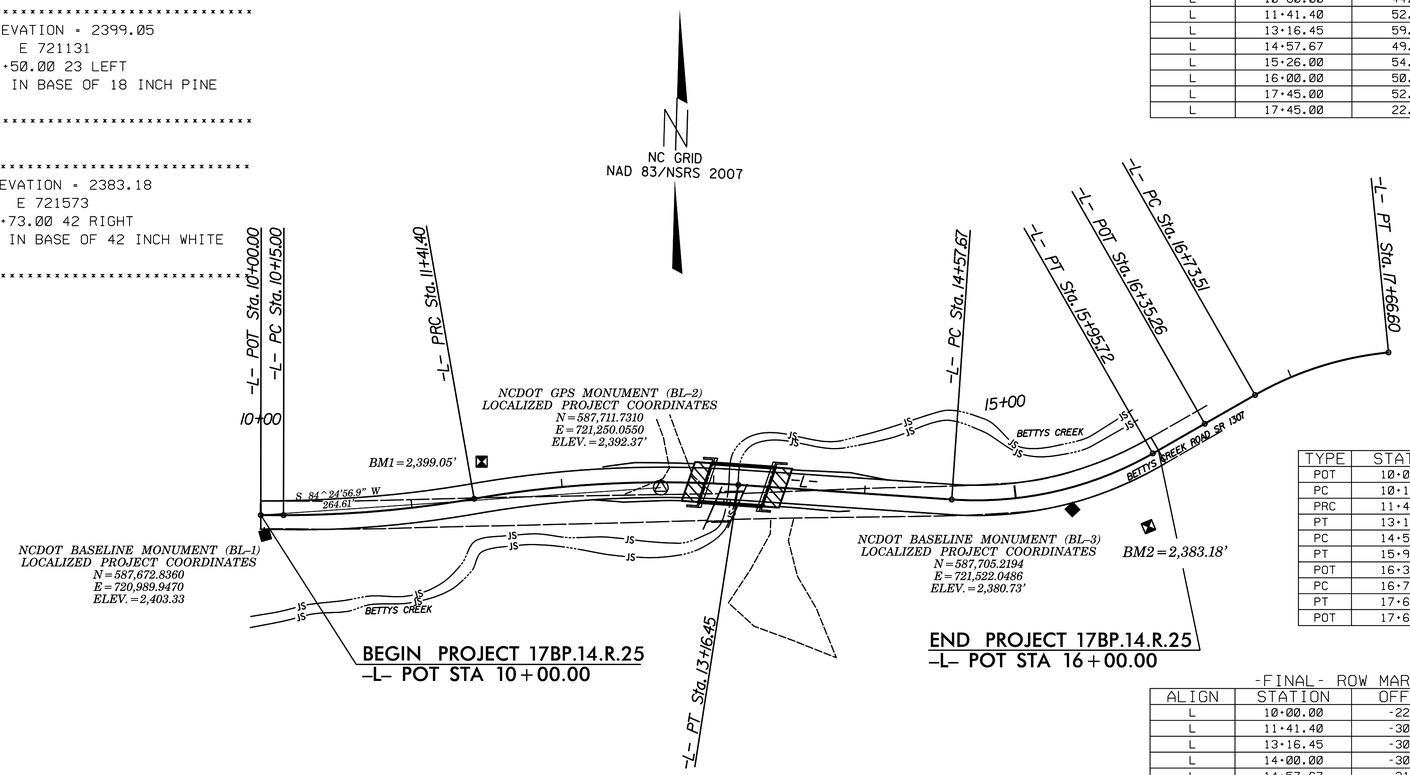

FINAL -L-

TYPE	STATION	NORTH	EAST
POT	10·00.00	587685.9818	720986.6962
PC	10·15.00	587686.3960	721001.6905
PRC	11·41.40	587700.8556	721127.1023
PT	13·16.45	587715.0264	721301.1530
PC	14·57.67	587709.4516	721442.2628
PT	15·95.72	587743.6741	721573.9606
POT	16·35.26	587764.2695	721607.7075
PC	16·73.51	587784.1948	721640.3565
PT	17·66.60	587814.8114	721727.5480
POT	17·66.72	587814.8261	721727.6629

-FINAL- ROW MARKER IRON PIN AND CAP-E

ALIGN	STATION	OFFSET	NORTH	EAST
L	10·00.00	-22.50	587708.4732	720986.0749
L	11·41.40	-30.00	587730.2458	721121.0845
L	13·16.45	-30.00	587745.0030	721302.3372
L	14·00.00	-30.00	587741.7050	721385.8179
L	14·57.67	-21.60	587731.0349	721443.1114

DATUM DESCRIPTION

THE LOCALIZED COORDINATE SYSTEM DEVELOPED FOR THIS PROJECT IS BASED ON THE STATE PLANE COORDINATES ESTABLISHED BY NCDOT FOR MONUMENT "490282-BL2"
WITH NAD 83/NSRS 2007 STATE PLANE GRID COORDINATES OF
NORTHING: 587711.7310(ft) EASTING: 721250.0550(ft)
ELEVATION: 2392.37(ft)
THE AVERAGE COMBINED GRID FACTOR USED ON THIS PROJECT (GROUND TO GRID) IS: 0.999762589
THE N.C. LAMBERT GRID BEARING AND LOCALIZED HORIZONTAL GROUND DISTANCE FROM "490282-BL2" TO -L- STATION 10+00.00 IS
S 84°24'56.9" W 264.61'
ALL LINEAR DIMENSIONS ARE LOCALIZED HORIZONTAL DISTANCES
VERTICAL DATUM USED IS NAVD 88

GEOID MODEL – G09NC
NOTE: DRAWING NOT TO SCALE

NOTES:

1. *THE CONTROL DATA FOR THIS PROJECT CAN BE FOUND ELECTRONICALLY BY SELECTING PROJECT CONTROL DATA AT:*
HTTPS://CONNECT.NCDOT.GOV/RESOURCES/LOCATION/

THE FILES TO BE FOUND ARE AS FOLLOWS:
490282_LS_CONTROL.TXT

SITE CALIBRATION INFORMATION HAS NOT BEEN PROVIDED FOR THIS PROJECT. IF FURTHER INFORMATION IS NEEDED, PLEASE CONTACT THE LOCATION AND SURVEYS UNIT.

△ *INDICATES GEODETIC CONTROL MONUMENTS USED OR SET FOR HORIZONTAL PROJECT CONTROL BY THE NCDOT LOCATION AND SURVEYS UNIT.*
PROJECT CONTROL ESTABLISHED USING GLOBAL POSITIONING SYSTEM.

PROJECT REFERENCE NO.	SHEET NO.
17BP.14.R.25	1–D

CENTERLINE COORDINATE LIST

Point #	Chain	Station	Northing (Y)	Easting (X)
1	L	10+00.00	587685.9818	720986.6962
2	L	11+00.00	587693.7128	721086.3261
3	L	12+00.00	587710.2784	721184.9209
4	L	13+00.00	587715.4893	721284.7057
5	L	14+00.00	587711.7284	721384.6337
6	L	15+00.00	587711.5882	721484.4775
7	L	16+00.00	587745.9026	721577.6122
8	L	17+00.00	587796.6120	721663.7425
9	L	17+66.72	587814.8261	721727.6629
10	DW1	10+00.00	587712.4211	721204.8051
11	DW1	11+00.00	587787.2802	721238.6568
12	DW1	11+04.78	587791.7113	721236.8605
13	DW2	10+00.00	587711.7284	721384.6337
14	DW2	11+00.00	587659.1688	721317.4302
15	DW2	11+02.97	587656.5287	721316.0703

8/17/99

USER: RogueC
DATE: 4/23/2013
TIME: 12:11:16 PM
DGN: I:\rodney\Proj\K9-0282_rdj_pat20\0.dgn

8/17/99

PROJECT REFERENCE NO.	SHEET NO.
17BP.14.R.25	2
R/W SHEET NO.	
ROADWAY DESIGN ENGINEER	PAVEMENT DESIGN ENGINEER

NORTH CAROLINA PROFESSIONAL SEAL 17306 ENGINEER LAURITTS N. KLOPPER

Prepared in the Office of: AECOM NC FIRM LICENSE No: F-0342 701 Corporate Center Drive, Suite 475 Raleigh, NC 27607 (919) 854-6200 – (919) 854-6259 FAX

PAVEMENT SCHEDULE

C1	PROP. APPROX. 3" ASPHALT CONCRETE SURFACE COURSE, TYPE S9.5B, AT AN AVERAGE RATE OF 168 LBS. PER SQ. YD. IN EACH OF TWO LAYERS.
C2	PROP. APPROX. 3¾" ASPHALT CONCRETE SURFACE COURSE, TYPE S9.5B, AT AN AVERAGE RATE OF 210 LBS. PER SQ. YD. IN EACH OF TWO LAYERS.
C3	PROP. VAR. DEPTH ASPHALT CONCRETE SURFACE COURSE, TYPE S9.5B, AT AN AVERAGE RATE OF 112 LBS. PER SQ. YD. PER 1" DEPTH TO BE PLACED IN LAYERS NOT TO EXCEED 2" IN DEPTH.
E1	PROP. APPROX. 5" ASPHALT CONCRETE BASE COURSE, TYPE B25.0B, AT AN AVERAGE RATE OF 570 LBS. PER SQ. YD.
E2	PROP. VAR. DEPTH ASPHALT CONCRETE BASE COURSE, TYPE B25.0B, AT AN AVERAGE RATE OF 114 LBS. PER SQ. YD. PER 1" DEPTH TO BE PLACED IN LAYERS NOT LESS THAN 3" IN DEPTH OR GREATER THAN 5½" IN DEPTH.
J1	8" AGGREGATE BASE COURSE.
T	EARTH MATERIAL.
U	EXISTING PAVEMENT.
W	VARIABLE DEPTH ASPHALT PAVEMENT (SEE STANDARD WEDGING DETAIL ON THIS SHEET)

NOTE: PAVEMENT EDGE SLOPES ARE 1:1 UNLESS SHOWN OTHERWISE.

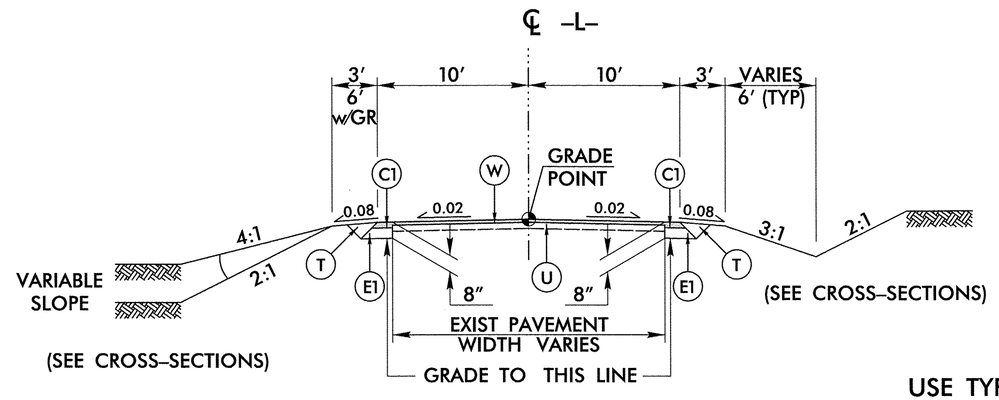

TYPICAL SECTION NO. 1

–L– (BETTYS CREEK RD)

USE TYPICAL SECTION NO. 1

–L– STA 10+00.00 TO STA 12+00.00
–L– STA 14+20.00 TO STA 16+00.00

NOTE: PAVE TO FACE OF GUARDRAIL.

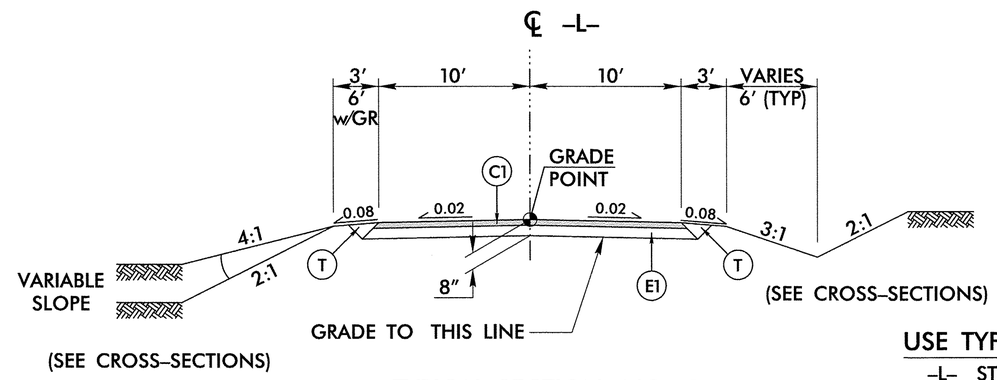

TYPICAL SECTION NO. 2

–L– (BETTYS CREEK RD)

USE TYPICAL SECTION NO. 2

–L– STA 12+00.00 TO STA 12+94.31 (BEG BRIDGE)
–L– STA 13+36.73 (END BRIDGE) TO STA 14+20.00

NOTE: PAVE TO FACE OF GUARDRAIL.

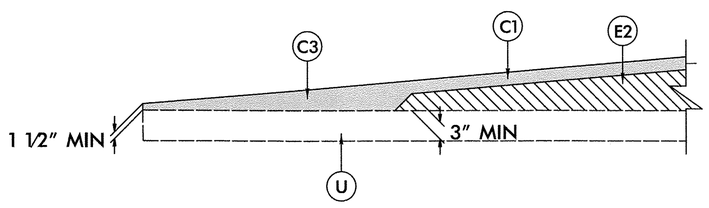

WEDGING DETAIL FOR RESURFACING

USE IN CONJUNCTION WITH TYPICAL SECTION NO. 1

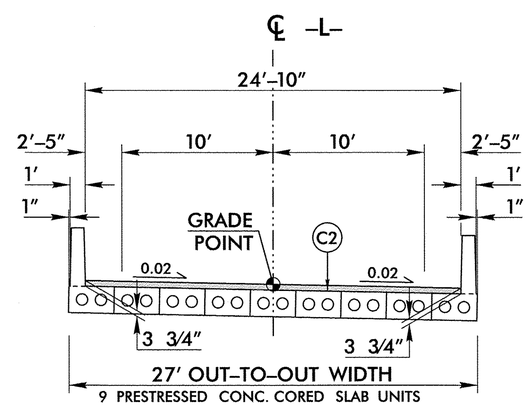

BRIDGE TYPICAL SECTION

FOR BR 282 OVER BETTYS CREEK

USE BRIDGE TYPICAL SECTION

–L– STA 12+94.31 (BEG BRIDGE) TO STA 13+36.73 (END BRIDGE)

USER: RoyaC
DATE: 4/23/2013
TIME: 2:53:41 PM
DGN: R:\Roadway\Proj\R-2282_rdy_typsdgn

PROJECT REFERENCE NO.	SHEET NO.
17BP.14.R.25	2-A
R/W SHEET NO.	
ROADWAY DESIGN ENGINEER	PAVEMENT DESIGN ENGINEER

NORTH CAROLINA PROFESSIONAL SEAL 17306 ENGINEER

Prepared in the Office of: AECOM 701 Corporate Center Drive, Suite 475 Raleigh, NC 27607 (919) 854-6200 - (919) 854-6259FAX NC FIRM LICENSE No: F-0342

PAVEMENT SCHEDULE	
C1	3" S9.5B
C2	3¾" S9.5B
C3	VAR. S9.5B
E1	5" B25.0B
E2	VAR. B25.0B
J1	8" ABC
T	EARTH MATERIAL
U	EXIST. PAVEMENT
W	WEDGING

NOTE: PAVEMENT EDGE SLOPES ARE 1:1 UNLESS SHOWN OTHERWISE.

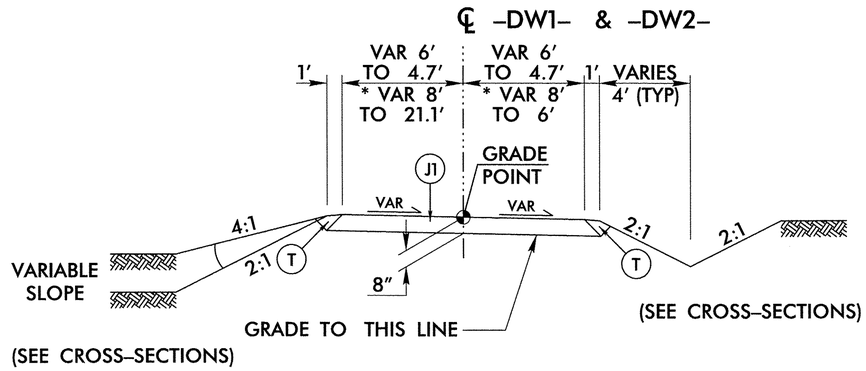

TYPICAL SECTION NO. 3

DRIVEWAYS

USE TYPICAL SECTION NO. 3

-DW1- STA 10+17.57 TO STA 10+88.29
* -DW2- STA 10+19.44 TO STA 10+89.20

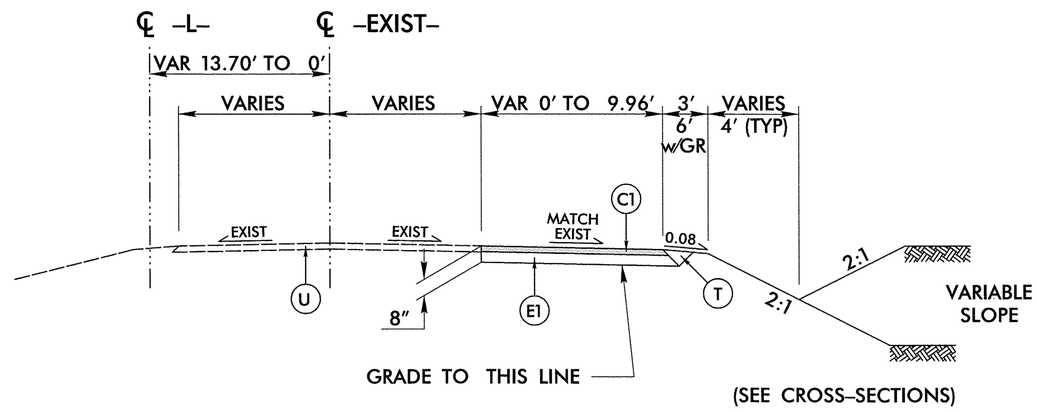

TYPICAL SECTION NO. 4

PHASE 1 TEMP WIDENING
(SEE TM PLANS FOR PHASING)

USE TYPICAL SECTION NO. 4

-L- STA 13+20.00 TO STA 16+00.00 RT

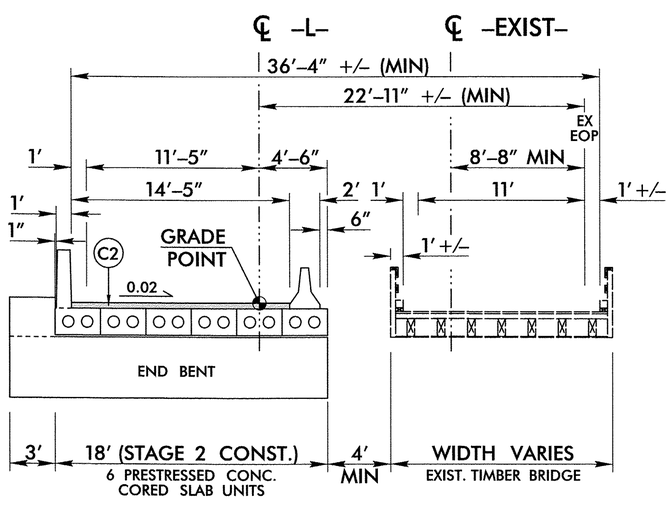

BRIDGE PHASE 2 STAGE 2 CONST.

FOR TEMP 1-LN 2-WAY TRAFFIC
(SEE TM PLANS FOR PHASING)

8/17/99

USER: Rapuk
DATE: 4/23/2013
TIME: 8:50 AM
DGN: R:\Roadway\Proj\R-12282_rdy_typsdgn

PROJECT REFERENCE NO.	SHEET NO.
17BP.14.R.25	3

STATE OF NORTH CAROLINA
DIVISION OF HIGHWAYS

SUMMARY OF QUANTITIES

STATE OF NORTH CAROLINA
DIVISION OF HIGHWAYS
ROADWAY SUMMARY OF QUANTITIES FOR CONTRACT – DN00158

ITEM NUMBER	SEC #	QUANTITY	UNIT	DESCRIPTION
0000100000-N	800	1	LS	MOBILIZATION
0000400000-N	801	1	LS	CONSTRUCTION SURVEYING
0008000000-E	200	1.00	ACR	SUPPLEMENTARY CLEARING & GRUBBING
0030000000-N	SP	1	LS	BRIDGE APPROACH FILL - SUBREGIONAL TIER AT STATION 13+15.70
0043000000-N	226	1	LS	GRADING
	200	0.10	ACR	CLEARING AND GRUBBING
	225	300.00	CY	UNCLASSIFIED EXCAVATION
	230	300.00	CY	BORROW EXCAVATION
	250	750.00	SY	REMOVAL OF EXISTING ASPHALT PAVEMENT
	500	1070.00	SY	FINE GRADING
0057000000-E	226	50.00	CY	UNDERCUT EXCAVATION
0195000000-E	265	50.00	CY	SELECT GRANULAR MATERIAL
0196000000-E	270	50.00	SY	GEOTEXTILE FOR SOIL STABILIZATION
0199000000-E	SP	620	SF	TEMPORARY SHORING
0318000000-E	300	4.00	TON	FOUNDATION CONDITIONING MATERIAL,MINOR STRUCTURES
0320000000-E	300	10.00	SY	FOUNDATION CONDITIONING GEOTEXTILE
0343000000-E	310	28.00	LF	15" SIDE DRAIN PIPE
0995000000-E	340	85.00	LF	PIPE REMOVAL
1099700000-E	505	50.00	TON	CLASS IV SUBGRADE STABILIZATION
1121000000-E	520	115.00	TON	AGGREGATE BASE COURSE
1220000000-E	545	50.00	TON	INCIDENTAL STONE BASE
1489000000-E	610	340.00	TON	ASPHALT CONC BASE COURSE, TYPE B25.0B
1519000000-E	610	285.00	TON	ASPHALT CONC SURFACE COURSE, TYPE S9.5B
1575000000-E	620	35.00	TON	ASPHALT BINDER FOR PLANT MIX
1693000000-E	654	10.00	TON	ASPHALT PLANT MIX, PAVEMENT REPAIR
3030000000-E	862	50.00	LF	STEEL BM GUARDRAIL
3150000000-N	862	5	EA	ADDITIONAL GUARDRAIL POSTS
3165000000-N	SP	4	EA	GUARDRAIL ANCHOR UNITS, TYPE 350 (TL-2)
3215000000-N	862	4	EA	GUARDRAIL ANCHOR UNITS, TYPE III
3649000000-E	876	6.00	TON	RIP RAP, CLASS B
4400000000-E	1110	32.00	SF	WORK ZONE SIGNS (STATIONARY)
4405000000-E	1110	172.00	SF	WORK ZONE SIGNS (PORTABLE)
4430000000-N	1130	80	EA	DRUMS
4465000000-N	1160	2	EA	TEMPORARY CRASH CUSHIONS
4470000000-N	1160	2	EA	RESET TEMPORARY CRASH CUSHION
4490000000-E	1170	40.00	LF	PORTABLE CONCRETE BARRIER (ANCHORED)
4505000000-E	1170	20.00	LF	RESET PORTABLE CONCRETE BARRIER (ANCHORED)
4685000000-E	1205	1200.00	LF	THERMOPLASTIC PAVEMENT MARKING LINES (4", 90 MILS)
4686000000-E	1205	1200.00	LF	THERMOPLASTIC PAVEMENT MARKING LINES (4", 120 MILS)
4835000000-E	1205	20.00	LF	PAINT PAVEMENT MARKING LINES (24")
4870000000-E	1205	20.00	LF	REMOVAL OF PAVEMENT MARKING LINES (24")
7980000000-N	SP	1	EA	PORTABLE TRAFFIC SIGNAL SYSTEM (ACTUATED)

ITEM NUMBER	SEC #	QUANTITY	UNIT	DESCRIPTION
3656000000-E	876	265.00	SY	GEOTEXTILE FOR DRAINAGE
6000000000-E	1605	1130.00	LF	TEMPORARY SILT FENCE
6006000000-E	1610	95.00	TON	EROSION CONTROL STONE, CLASS A
6009000000-E	1610	140.00	TON	EROSION CONTROL STONE, CLASS B
6012000000-E	1610	45.00	TON	SEDIMENT CONTROL STONE
6015000000-E	1615	1.00	ACR	TEMPORARY MULCHING
6018000000-E	1620	50.00	LB	SEED FOR TEMPORARY SEEDING
6021000000-E	1620	0.25	TON	FERTILIZER FOR TEMPORARY SEEDING
6024000000-E	1622	100.00	LF	TEMPORARY SLOPE DRAINS
6029000000-E	SP	100.00	LF	SAFETY FENCE
6030000000-E	1630	90.00	CY	SILT EXCAVATION
6036000000-E	1631	2500.00	SY	MATTING FOR EROSION CONTROL
6038000000-E	SP	210.00	SY	PERMANENT SOIL REINFORCING MAT
6042000000-E	1632	45.00	LF	1/4" HARDWARE CLOTH
6071020000-E	SP	25.00	LB	POLYACRYLAMIDE (PAM)
6084000000-E	1660	1.00	ACR	SEEDING AND MULCHING
6090000000-E	1661	50.00	LB	SEED FOR REPAIR SEEDING
6093000000-E	1661	0.25	TON	FERTILIZER FOR REPAIR SEEDING
6096000000-E	1662	50.00	LB	SEED FOR SUPPLEMENTAL SEEDING
6108000000-E	1665	0.75	TON	FERTILIZER TOPDRESSING
6117000000-N	SP	15	EA	RESPONSE FOR EROSION CONTROL
8035000000-N	402	1	LS	REMOVAL OF EXISTING STRUCTURE AT STATION 13+15.70
8112730000-N	450	1	LS	PDA TESTING
8121000000-N	412	1	LS	UNCLASSIFIED STRUCTURE EXCAVATION AT STATION 13+15.70
8182000000-E	420	25.40	CY	CL A CONC (BRG)
8210000000-N	422	1	LS	BRIDGE APPROACH SLABS, STATION 13+15.70
8217000000-E	425	3796.00	LBS	REINFORCING STEEL (BRIDGE)
8364000000-E	450	400.00	LF	HP12X53 STL PILES
8391000000-N	450	10	EA	STL PILE POINTS
8505000000-E	460	80.25	LF	VERTICAL CONC BARRIER RAIL
8608000000-E	876	57.00	TONS	RIP RAP CLASS II (2'-0" THICK)
8622000000-E	876	63.00	SY	GEOTEXTILE FOR DRAINAGE
8657000000-N	430	1	LS	ELASTOMERIC BEARINGS
8762000000-E	430	360.00	LF	3'-0" X 1'-9" PRESTRESSED CONCRETE CORED SLABS

USER: Nlin
DATE: 5/12/2003
TIME: 10:37:47 AM
DGN: QA6023877Ex400_Tech_Info_Disc_Files\450_NCDOT\Sdt\ed2\sdFiles\GR6_2\RoadwayProj\A9-0282_rdy_pat313.dgn

8/17/99

PROJECT REFERENCE NO.	SHEET NO.
17BP.14.R.25	3–A

SUMMARY OF EARTHWORK

LINE	Station	Station	Uncl. Excav.	Embank. +%	Borrow	Waste
L Phase 1	13+20.00	16+00.00	66	44	0	22
L Phase 2	10+00.00	16+00.00	105	326	221	0
L Phase 3	10+00.00	16+00.00	119	151	32	0
TOTAL			**290**	**521**	**253**	**22**
ADJUSTMENTS DUE TO						
Est. Loss Due To Clearing And Grubbing			0		0	
Shoulder Material						
Rock Waste To Replace Borrow						
Adjust For Rock Swell That Replaces Borrow						
Eliminate Shrinkage For Mat'l That Is Now Rock						
Earth Waste to Replace Borrow					-22	-22
PROJECT TOTAL			**290**	**521**	**231**	**0**
Est. 5% to Replace Topsoil in Borrow Pits					12	
GRAND TOTAL			**290**		**243**	
SAY			**300**		**300**	
Select Granular Material		**50 CY**				
Estimate Undercut		**50 CY**				

SUMMARY OF EXISTING ASPHALT PAVEMENT REMOVAL

LINE	Station	Station	LOC LT/RT/CL	YD^2
-L-	10+46.22	13+03.94	RT	307.84
-L-	13+13.47	14+66.53	RT	218.82
-L-	14+71.55	15+03.18	LT	0.91
-L-	15+51.44	15+96.69	LT	0.49
-L- Temp Pavt	13+20.00	16+00.00	RT	216.52
			TOTAL:	**744.58**
			SAY:	**750**

Approximate quantities only. Unclassified excavation, borrow excavation, fine grading, clearing and grubbing, and removal of existing pavement will be paid for at the lump sum price for "Grading".

NORTH CAROLINA DEPARTMENT OF TRANSPORTATION
DIVISION OF HIGHWAYS

Note: Invert Elevations indicated are for Bid Purposes only and shall not be used for project construction stakeout. See "Standard Specifications For Roads and Structures, Section 300-5".

LIST OF PIPES, ENDWALLS, ETC. (FOR PIPES 48 INCHES & UNDER)

| STATION / SIZE / THICKNESS OR GAUGE | LOCATION (LT, RT, OR CL)' | STRUCTURE NO. FROM | STRUCTURE NO. TO | TOP ELEVATION | INVERT ELEVATION | INVERT ELEVATION | SLOPE CRITICAL | DRAINAGE PIPE (RCP, CSP, CAAP, HDPE, or PVC) 12" | 15" | 18" | 24" | 30" | 36" | 42" | 48" | DO NOT USE RCP | DO NOT USE CSP | DO NOT USE CAAP | DO NOT USE HDPE | C.S. PIPE 12" | 15" | 18" | 24" | 30" | 36" | 42" | 48" | .064 | .064 | .064 | .064 | .079 | .079 | .109 | .109 | R.C. PIPE CLASS III 12" | 15" | 18" | 24" | 30" | 36" | 42" | 48" | R.C. PIPE CLASS IV 12" | 15" | 18" | 24" | 30" | 36" | 42" | 48" | ** " R.C. PIPE (CLASS V) | *** " RC PIPE CULVERTS, CONTRACTOR DESIGN | **** " RC PIPE CULVERTS, CONTRACTOR DESIGN | 15" SIDE DRAIN PIPE | 18" SIDE DRAIN PIPE | ENDWALLS STD. 838.01 838.11 OR STD. 838.80 (UNLESS NOTED OTHERWISE) CU. YARDS | QUANTITIES FOR DRAINAGE STRUCTURES PER EACH (0' THRU 5.0') | LIN. FT. A 5.0' THRU 10.0' | LIN. FT. B 10.0' AND ABOVE | "TOTAL L.F. FOR PAY QUANTITY SHALL BE COL. 'A' + (1.3 X COL. 'B') | C.B. STD. 840.01 OR STD. 840.02 | FRAME, GRATES, AND HOOD STANDARD 840.03 TYPE OF GRATE E | F | G | CONCRETE TRANSITIONAL SECTION DROP INLET | CATCH BASIN | D.I. STD. 840.14 OR STD. 840.15 | D.I. FRAME AND GRATE STD. 840.16 | G.D.I. TYPE "A" STD. 840.17 OR 840.26 | G.D.I. TYPE "B" STD. 840.18 OR 840.27 | G.D.I. TYPE "D" STD. 840.19 OR 840.28 | G.D.I. FRAME WITH GRATE STD. 840.20 | G.D.I. FRAME WITH TWO GRATES STD. 840.22 | G.D.I. (N.S.) FRAME WITH GRATE STD. 840.24 | G.D.I. (N.S.) FRAME WITH TWO GRATES STD. 840.24 | J.B. STD. 840.31 OR 840.32 | DRAINAGE PIPE ELBOWS NO. & SIZE | CONC. & BRICK PIPE PLUG, C.Y. STD. 840.71 | CONC. COLLARS CL. "B" C.Y. STD. 840.72 | PIPE REMOVAL LIN. FT. | REMARKS |
|---|---|---|---|---|---|---

PROJECT REFERENCE NO.	SHEET NO.
17BP.14.R.25	4
R/W SHEET NO.	

ROADWAY DESIGN ENGINEER — NORTH CAROLINA PROFESSIONAL SEAL 17306 ENGINEER — CLAUDETTE M. F. ROGERS — 4/23/13

HYDRAULICS ENGINEER — NORTH CAROLINA PROFESSIONAL SEAL 14101 ENGINEER — BENJ. M. KAMPRATH — 4/23/13

Prepared in the Office of: AECOM — NC FIRM LICENSE No: F-0342 — 701 Corporate Center Drive, Suite 475 — Raleigh, NC 27607 — (919) 854-6200 - (919) 854-6259(FAX)

8/17/99

REVISIONS

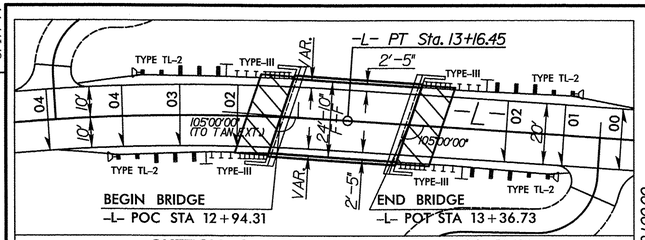

SKETCH SHOWING THE RELATIONSHIP OF THE BRIDGE TO THE PAVEMENT

25 0 25 50

BEGIN PROJECT 17BP.14.R.25
-L- POT STA 10+00.00

-L-

PI Sta 10+78.36
Δ = 9° 59' 22.0" (LT)
D = 7° 54' 10.3"
L = 126.40'
T = 63.36'
R = 725.00'
e = 0.03 ft/ft
Runoff = 57'

PI Sta 12+29.36
Δ = 13° 50' 02.7" (RT)
D = 7° 54' 10.3"
L = 175.05'
T = 87.95'
R = 725.00'
e = 0.04 ft/ft
Runoff = 76'

PI Sta 15+28.75
Δ = 33° 39' 27.9" (LT)
D = 24° 22' 52.3"
L = 138.05'
T = 71.08'
R = 235.00'
e = 0.04 ft/ft
Runoff = 76'

PI Sta 17+20.75
Δ = 24° 05' 38.9" (RT)
D = 25° 52' 52.3"
L = 93.10'
T = 47.25'
R = 221.38'

-DW1-

PI Sta 10+37.33
Δ = 97° 02' 50.6" (RT)
D = 286° 28' 44.0"
L = 33.88'
T = 22.62'
R = 20.00'

PI Sta 10+79.23
Δ = 113° 45' 11.4" (LT)
D = 286° 28' 44.0"
L = 39.71'
T = 30.65'
R = 20.00'

-DW2-

PI Sta 10+31.71
Δ = 87° 10' 10.1" (RT)
D = 286° 28' 44.0"
L = 30.43'
T = 19.04'
R = 20.00'

PI Sta 10+79.56
Δ = 62° 10' 50.1" (LT)
D = 286° 28' 44.0"
L = 21.71'
T = 12.06'
R = 20.00'

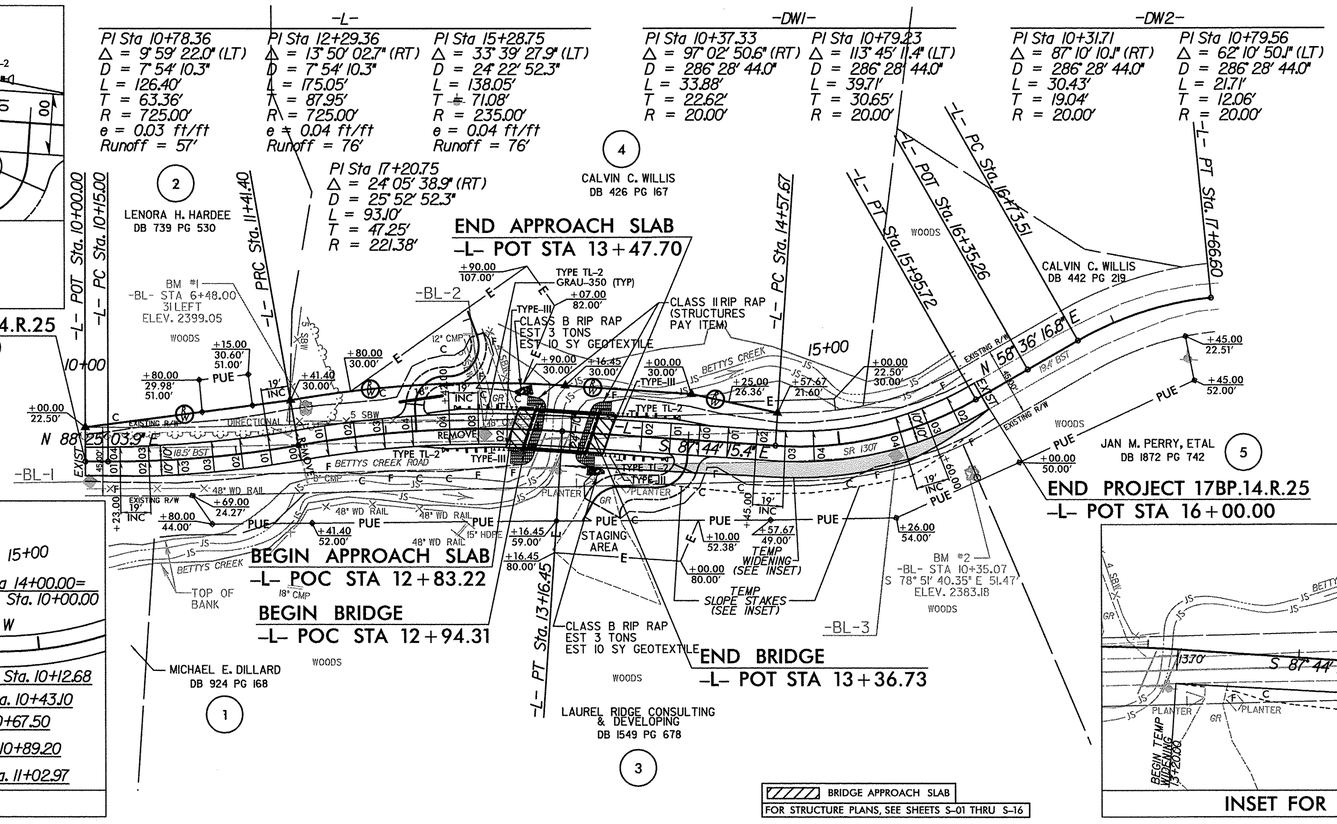

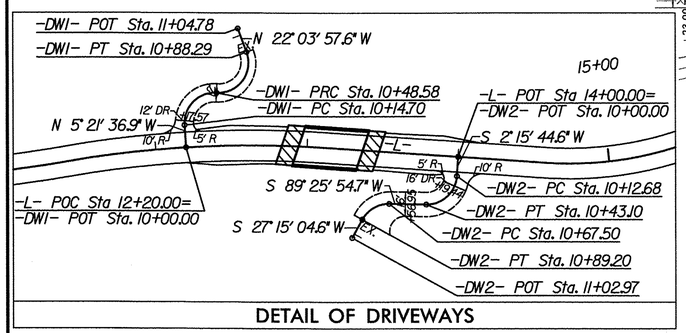

DETAIL OF DRIVEWAYS

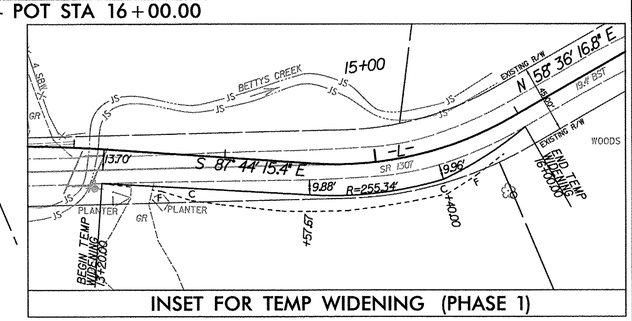

INSET FOR TEMP WIDENING (PHASE 1)

NAD 83/ NSRS 2007

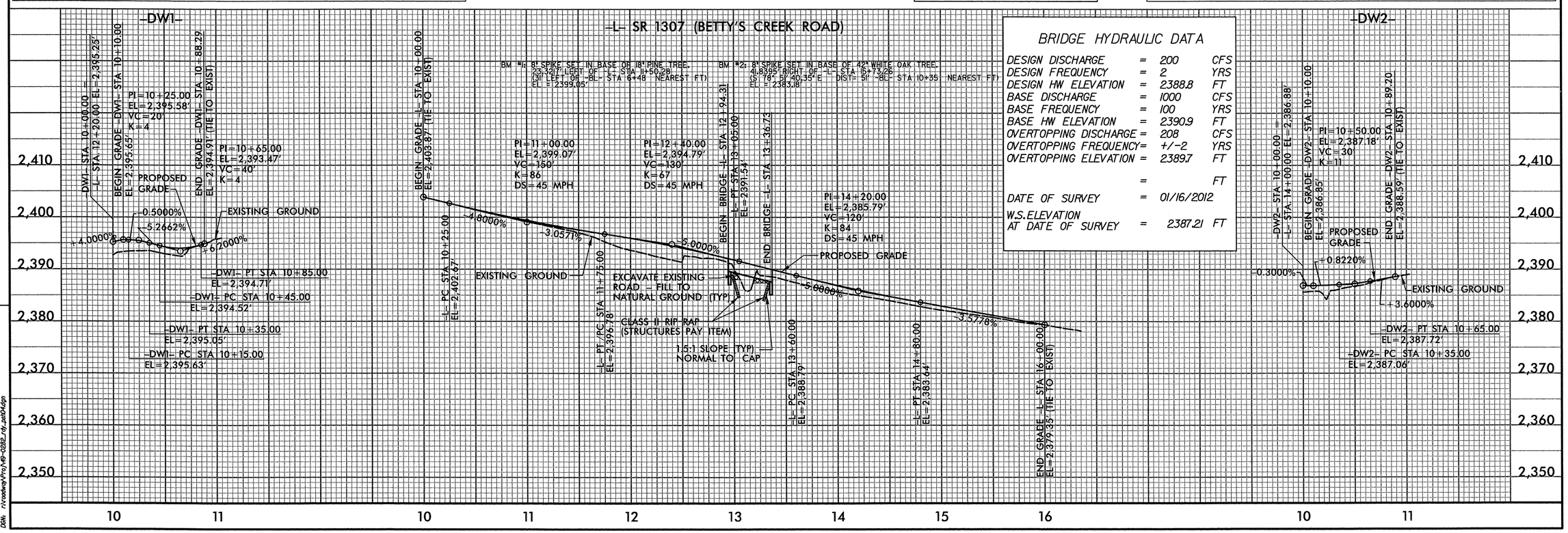

BRIDGE HYDRAULIC DATA

DESIGN DISCHARGE	=	200	CFS
DESIGN FREQUENCY	=	2	YRS
DESIGN HW ELEVATION	=	2388.8	FT
BASE DISCHARGE	=	1000	CFS
BASE FREQUENCY	=	100	YRS
BASE HW ELEVATION	=	2390.9	FT
OVERTOPPING DISCHARGE	=	208	CFS
OVERTOPPING FREQUENCY	=	+/-2	YRS
OVERTOPPING ELEVATION	=	2389.7	FT
	=		FT
DATE OF SURVEY	=	01/16/2012	
W.S. ELEVATION AT DATE OF SURVEY	=	2387.21	FT

USER: RogerC
DATE: 4/23/2013
TIME: 1:04 PM
DGN: n:\roadway\Proj\R9-0282_rdy_pet04.dgn

STATE OF NORTH CAROLINA
DIVISION OF HIGHWAYS

TRANSPORTATION MANAGEMENT PLAN

JACKSON COUNTY

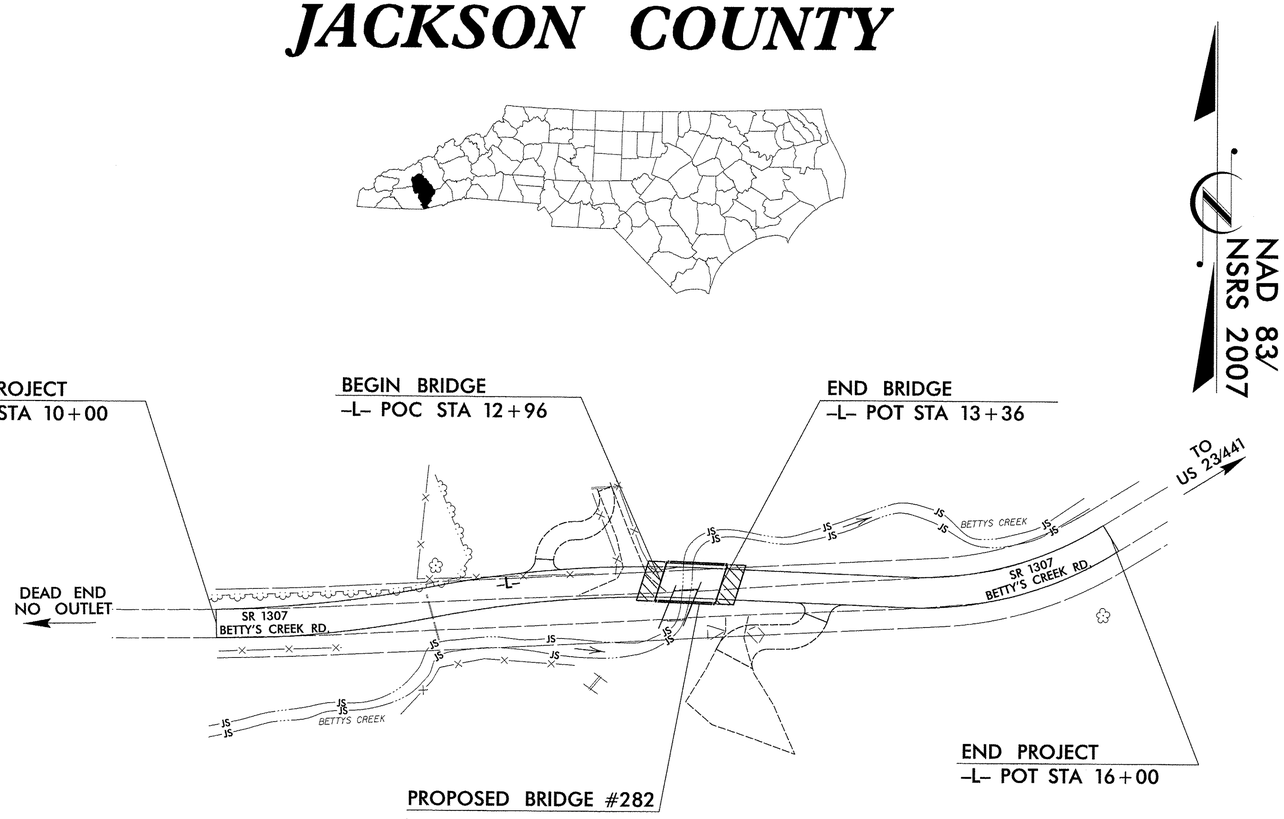

INDEX OF SHEETS

SHEET NO.	TITLE
TMP-1	TITLE SHEET, AND INDEX OF SHEETS
TMP-1A	GENERAL NOTES
TMP-2	TEMPORARY TRAFFIC CONTROL PHASE I DETAIL
TMP-3	TEMPORARY TRAFFIC CONTROL PHASE II DETAIL
TMP-4	TEMPORARY TRAFFIC CONTROL PHASE III DETAIL
PMP-1	PAVEMENT MARKING PLAN

NOTE: WRITTEN PHASING FOR THE TRAFFIC MANAGEMENT PLAN APPEARS ON THE DETAIL SHEETS

ROADWAY STANDARD DRAWINGS

THE FOLLOWING ROADWAY STANDARDS AS APPEAR IN "ROADWAY STANDARD DRAWINGS" - PROJECT SERVICES UNIT - N.C. DEPARTMENT OF TRANSPORTATION - RALEIGH, N.C., DATED JANUARY 2012 ARE APPLICABLE TO THIS PROJECT AND BY REFERENCE HEREBY ARE CONSIDERED A PART OF THESE PLANS:

STD.NO.	TITLE
1101.01	WORK ZONE WARNING SIGNS
1101.02	TEMPORARY LANE CLOSURES
1101.04	TEMPORARY SHOULDER CLOSURES
1101.05	WORK ZONE VEHICLE ACCESSES
1101.11	TRAFFIC CONTROL DESIGN TABLES
1110.01	STATIONARY WORK ZONE SIGNS
1110.02	PORTABLE WORK ZONE SIGNS
1130.01	DRUMS
1160.01	TEMPORARY CRASH CUSHION
1170.01	PORTABLE CONCRETE BARRIER
1205.01	PAVEMENT MARKINGS - LINE TYPES AND OFFSETS
1205.02	PAVEMENT MARKINGS - TWO LANE AND MULTILANE ROADWAYS
1205.12	PAVEMENT MARKINGS - BRIDGES

SHEET NO.
TMP-1

17BP.14.R.25

TIP PROJECT:

WORK ZONE SAFETY & MOBILITY
"from the MOUNTAINS to the COAST"

N.C.D.O.T. WORK ZONE TRAFFIC CONTROL
1561 MAIL SERVICE CENTER (MSC) RALEIGH, NC 27699-1561
750 N. GREENFIELD PARKWAY, GARNER, NC 27529 (DELIVERY)
PHONE: (919) 773-2800 FAX: (919) 771-2745

J. S. BOURNE, PE — STATE TRAFFIC MANAGEMENT ENGINEER
T.E. HILDEBRAND, PE — TRAFFIC CONTROL PROJECT ENGINEER
K.J. VAN METRE, PE — TRAFFIC CONTROL PROJECT DESIGN ENGINEER
_____ — TRAFFIC CONTROL DESIGN ENGINEER

DIVISION OF HIGHWAYS · STATE OF NORTH CAROLINA · DEPARTMENT OF TRANSPORTATION · WORK ZONE TRAFFIC CONTROL

AECOM
NC Firm License No.: F-0342
701 Corporate Center Drive
Suite 475 Raleigh, NC 27607
Phone: 919-854-6200

APPROVED: [signature]
DATE: 4/29/13

SEAL

NORTH CAROLINA PROFESSIONAL SEAL 038501 ENGINEER THOMAS E. HILDEBRAND

3:06:20 PM
R:\Traffic\TrafficControl\TCP\49-0282_tcp_tsh.dgn
hildebrandt

GENERAL NOTES

CHANGES MAY BE REQUIRED WHEN PHYSICAL DIMENSIONS IN THE DETAIL DRAWINGS, STANDARD DETAILS, AND ROADWAY DETAILS ARE NOT ATTAINABLE TO MEET FIELD CONDITIONS OR RESULT IN DUPLICATE OR UNDESIRED OVERLAPPING OF DEVICES. MODIFICATION MAY INCLUDE: MOVING, SUPPLEMENTING, COVERING, OR REMOVAL OF DEVICES AS DIRECTED BY THE ENGINEER.

THE FOLLOWING GENERAL NOTES APPLY AT ALL TIMES FOR THE DURATION OF THE CONSTRUCTION PROJECT EXCEPT WHEN OTHERWISE NOTED IN THE PLAN OR DIRECTED BY THE ENGINEER.

TIME RESTRICTIONS

A) DO NOT CLOSE OR NARROW TRAVEL LANES AS FOLLOWS:

ROAD NAME — DAY AND TIME RESTRICTIONS

BETTY'S CREEK RD 7:00AM - 9:00AM AND 4:00PM - 6:00PM, MONDAY THRU FRIDAY.

B) DO NOT CLOSE OR NARROW TRAVEL LANES DURING HOLIDAYS AND SPECIAL EVENTS AS FOLLOWS:

BETTY'S CREEK RD

TO BE DETERMINED BY DIVISION PERSONNEL.

LANE AND SHOULDER CLOSURE REQUIREMENTS

C) REMOVE LANE CLOSURE DEVICES FROM THE LANE WHEN WORK IS NOT BEING PERFORMED BEHIND THE LANE CLOSURE OR WHEN A LANE CLOSURE IS NO LONGER NEEDED OR AS DIRECTED BY THE ENGINEER.

D) WHEN PERSONNEL AND/OR EQUIPMENT ARE WORKING ON THE SHOULDER ADJACENT TO AN UNDIVIDED FACILITY AND WITHIN 5 FT OF AN OPEN TRAVEL LANE, CLOSE THE NEAREST OPEN TRAVEL LANE USING ROADWAY STANDARD DRAWING NO. 1101.02 UNLESS THE WORK AREA IS PROTECTED BY BARRIER OR GUARDRAIL.

WHEN PERSONNEL AND/OR EQUIPMENT ARE WORKING ON THE SHOULDER ADJACENT TO A DIVIDED FACILITY AND WITHIN 10 FT OF AN OPEN TRAVEL LANE, CLOSE THE NEAREST OPEN TRAVEL LANE USING ROADWAY STANDARD DRAWING NO. 1101.02 UNLESS THE WORK AREA IS PROTECTED BY BARRIER OR GUARDRAIL.

E) WHEN PERSONNEL AND/OR EQUIPMENT ARE WORKING WITHIN A LANE OF TRAVEL OF AN UNDIVIDED OR DIVIDED FACILITY, CLOSE THE LANE ACCORDING TO THE TRAFFIC CONTROL PLANS, ROADWAY STANDARD DRAWINGS, OR AS DIRECTED BY THE ENGINEER. CONDUCT THE WORK SO THAT ALL PERSONNEL AND/OR EQUIPMENT REMAIN WITHIN THE CLOSED TRAVEL LANE.

F) DO NOT WORK SIMULTANEOUSLY WITHIN 15 FT ON BOTH SIDES OF AN OPEN TRAVELWAY, RAMP, OR LOOP WITHIN THE SAME LOCATION UNLESS PROTECTED WITH GUARDRAIL OR BARRIER.

G) PROVIDE TRAFFIC CONTROL FOR APPROPRIATE LANE CLOSURES FOR SURVEYING DONE BY THE DEPARTMENT.

PAVEMENT EDGE DROP OFF REQUIREMENTS

H) BACKFILL AT A 6:1 SLOPE UP TO THE EDGE AND ELEVATION OF EXISTING PAVEMENT IN AREAS ADJACENT TO AN OPENED TRAVEL LANE THAT HAS AN EDGE OF PAVEMENT DROP-OFF AS FOLLOWS:

BACKFILL DROP-OFFS THAT EXCEED 2 INCHES ON ROADWAYS WITH POSTED SPEED LIMITS OF 45 MPH OR GREATER.

BACKFILL DROP-OFFS THAT EXCEED 3 INCHES ON ROADWAYS WITH POSTED SPEED LIMITS LESS THAN 45 MPH.

BACKFILL WITH SUITABLE COMPACTED MATERIAL, AS APPROVED BY THE ENGINEER, AT NO EXPENSE TO THE DEPARTMENT.

I) DO NOT EXCEED A DIFFERENCE OF 2 INCHES IN ELEVATION BETWEEN OPEN LANES OF TRAFFIC FOR NOMINAL LIFTS OF 1.5 INCHES. INSTALL ADVANCE WARNING "UNEVEN LANES" SIGNS (W8-11) 100 FT IN ADVANCE AND A MINIMUM OF EVERY HALF MILE THROUGHOUT THE UNEVEN AREA.

TRAFFIC PATTERN ALTERATIONS

J) NOTIFY THE ENGINEER TWENTY ONE (21) CALENDAR DAYS PRIOR TO ANY TRAFFIC PATTERN ALTERATION.

SIGNING

K) INSTALL ADVANCE WORK ZONE WARNING SIGNS WHEN WORK IS WITHIN 40 FT FROM THE EDGE OF TRAVEL LANE AND NO MORE THAN THREE (3) DAYS PRIOR TO THE BEGINNING OF CONSTRUCTION.

L) PROVIDE SIGNING AND DEVICES REQUIRED TO CLOSE THE ROAD ACCORDING TO THE ROADWAY STANDARD DRAWINGS AND TRAFFIC CONTROL PLANS.

M) COVER OR REMOVE ALL SIGNS AND DEVICES REQUIRED TO CLOSE THE ROAD WHEN ROAD CLOSURE IS NOT IN OPERATION.

COVER OR REMOVE ALL SIGNS REQUIRED FOR THE OFF-SITE DETOUR WHEN THE DETOUR IS NOT IN OPERATION.

N) ENSURE ALL NECESSARY SIGNING IS IN PLACE PRIOR TO ALTERING ANY TRAFFIC PATTERN.

O) INSTALL BLACK ON ORANGE "DIP" SIGNS (W8-2) AND/OR "BUMP" SIGNS (W8-1) IN ADVANCE OF THE UNEVEN AREA, OR AS DIRECTED BY THE ENGINEER.

TRAFFIC BARRIER

P) INSTALL TEMPORARY BARRIER ACCORDING TO THE TRANSPORTATION MANAGEMENT PLANS A MAXIMUM OF TWO (2) WEEKS PRIOR TO BEGINNING WORK IN ANY LOCATION. ONCE TEMPORARY BARRIER IS INSTALLED AT ANY LOCATION PROCEED IN A CONTINUOUS MANNER TO COMPLETE THE PROPOSED WORK IN THAT LOCATION UNLESS OTHERWISE STATED IN THE TRANSPORTATION MANAGEMENT PLANS OR AS DIRECTED BY THE ENGINEER.

DO NOT PLACE BARRIER DIRECTLY ON ANY SURFACE OTHER THAN ASPHALT OR CONCRETE.

ONCE TEMPORARY BARRIER IS INSTALLED AT ANY LOCATION AND NO WORK IS PERFORMED BEHIND THE TEMPORARY BARRIER FOR A PERIOD LONGER THAN TWO (2) MONTHS, REMOVE / RESET TEMPORARY BARRIER AT NO COST TO THE DEPARTMENT UNLESS OTHERWISE STATED IN THE TRANSPORTATION MANAGEMENT PLANS, TEMPORARY BARRIER IS PROTECTING A HAZARD, OR AS DIRECTED BY THE ENGINEER.

INSTALL TEMPORARY BARRIER WITH THE TRAFFIC FLOW BEGINNING WITH THE UPSTREAM SIDE OF TRAFFIC. REMOVE TEMPORARY BARRIER AGAINST THE TRAFFIC FLOW BEGINNING WITH THE DOWNSTREAM SIDE OF TRAFFIC.

INSTALL AND SPACE DRUMS NO GREATER THAN TWICE THE POSTED SPEED LIMIT (MPH) TO CLOSE OR KEEP THE SECTION OF THE ROADWAY CLOSED UNTIL THE TEMPORARY BARRIER CAN BE PLACED OR AFTER THE TEMPORARY BARRIER IS REMOVED.

Q) PROTECT THE APPROACH END OF MOVABLE/PORTABLE CONCRETE BARRIER AT ALL TIMES DURING THE INSTALLATION AND REMOVAL OF THE BARRIER BY EITHER A TRUCK MOUNTED ATTENUATOR (MAXIMUM 72 HOURS) OR A TEMPORARY CRASH CUSHION.

PROTECT THE APPROACH END OF MOVABLE/PORTABLE CONCRETE BARRIER FROM ONCOMING TRAFFIC AT ALL TIMES BY A TEMPORARY CRASH CUSHION UNLESS THE APPROACH END OF MOVABLE/PORTABLE CONCRETE BARRIER IS OFFSET FROM ONCOMING TRAFFIC AS FOLLOWS OR AS SHOWN IN THE PLANS: (SEE ALSO 1101.05)

POSTED SPEED LIMIT	MINIMUM OFFSET
40 OR LESS	15 FT
45 - 50	20 FT
55	25 FT
60 MPH or HIGHER	30 FT

TRAFFIC CONTROL DEVICES

R) WHEN LANE CLOSURES ARE NOT IN EFFECT SPACE CHANNELIZING DEVICES IN WORK AREAS NO GREATER IN FEET THAN TWICE THE POSTED SPEED LIMIT (MPH) EXCEPT, 10 FT ON-CENTER IN RADII, AND 3 FT OFF THE EDGE OF AN OPEN TRAVELWAY. REFER TO STANDARD SPECIFICATIONS FOR ROADS AND STRUCTURES SECTIONS 1130 (DRUMS), 1135 (CONES) AND 1180 (SKINNY DRUMS) FOR ADDITIONAL REQUIREMENTS.

S) PLACE TYPE III BARRICADES, WITH "ROAD CLOSED" SIGN R11-2 ATTACHED, OF SUFFICIENT LENGTH TO CLOSE ENTIRE ROADWAY.

T) PLACE ADDITIONAL SETS OF THREE CHANNELIZING DEVICES PERPENDICULAR TO THE EDGE OF TRAVELWAY ON 500 FT CENTERS WHEN UNOPENED LANES ARE CLOSED TO TRAFFIC.

U) TIE PROPOSED PAVEMENT MARKING LINES TO EXISTING PAVEMENT MARKING LINES.

MISCELLANEOUS

V) IN THE EVENT A TIE-IN CANNOT BE MADE IN ONE DAY'S TIME, BRING THE TIE-IN AREA TO AN APPROPRIATE ROADWAY ELEVATION AS DETERMINED BY THE ENGINEER. PLACE BLACK ON ORANGE "LOOSE GRAVEL" SIGNS (W8-7) AND BLACK ON ORANGE "PAVEMENT ENDS" SIGNS (W8-3) 50 FT AND 100 FT RESPECTIVELY IN ADVANCE OF THE UNEVEN AREAS. USE DRUMS TO DELINEATE THE EDGE OF ROADWAY ALONG UNPAVED AREAS.

AECOM
NC Firm License No.: F-0342
701 Corporate Center Drive
Suite 475 Raleigh, NC 27607
Phone: 919-854-6200

APPROVED:_____ DATE:_____

NORTH CAROLINA PROFESSIONAL SEAL 038301 ENGINEER THOMAS E. HILDEBRANDT

DIVISION OF HIGHWAYS · STATE OF NORTH CAROLINA · DEPARTMENT OF TRANSPORTATION · WORK ZONE TRAFFIC CONTROL

GENERAL NOTES

SCALE:	
DATE:	4/22/2013
DWG. BY:	TEH
DESIGN BY:	KJV
REVIEWED BY:	

REVISIONS

CADD FILE

3:06:21 PM
R:\Traffic\TrafficControl\TCP\49-0282_tcp_psh02_Notes_General.dgn
hildebrandt

PROJ. REFERENCE NO.	SHEET NO.
17BP.14.R.25	TMP-2

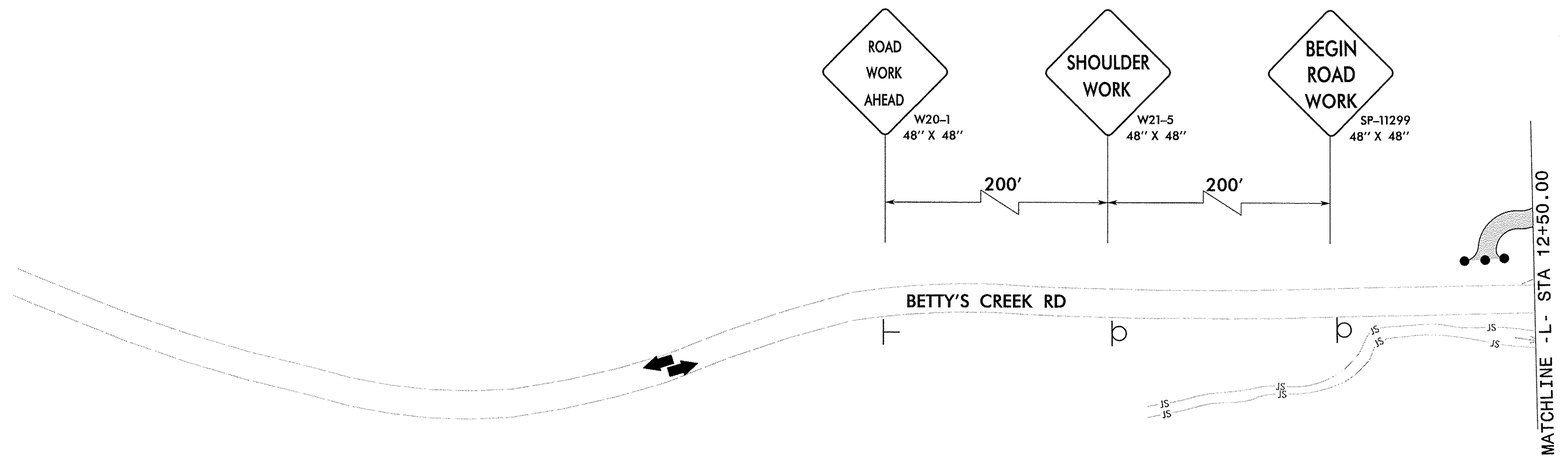

PHASING NOTES

STAGE 1: MAINTAIN TRAFFIC ON EXISTING ROADWAY.

STAGE 2: PLACE ADVANCED WARNING SIGNS, TRAFFIC CONTROL DEVICES AND CONSTRUCT TEMP. WIDENING FROM STA 13+20 TO STA 16+00 AND DRIVEWAY.

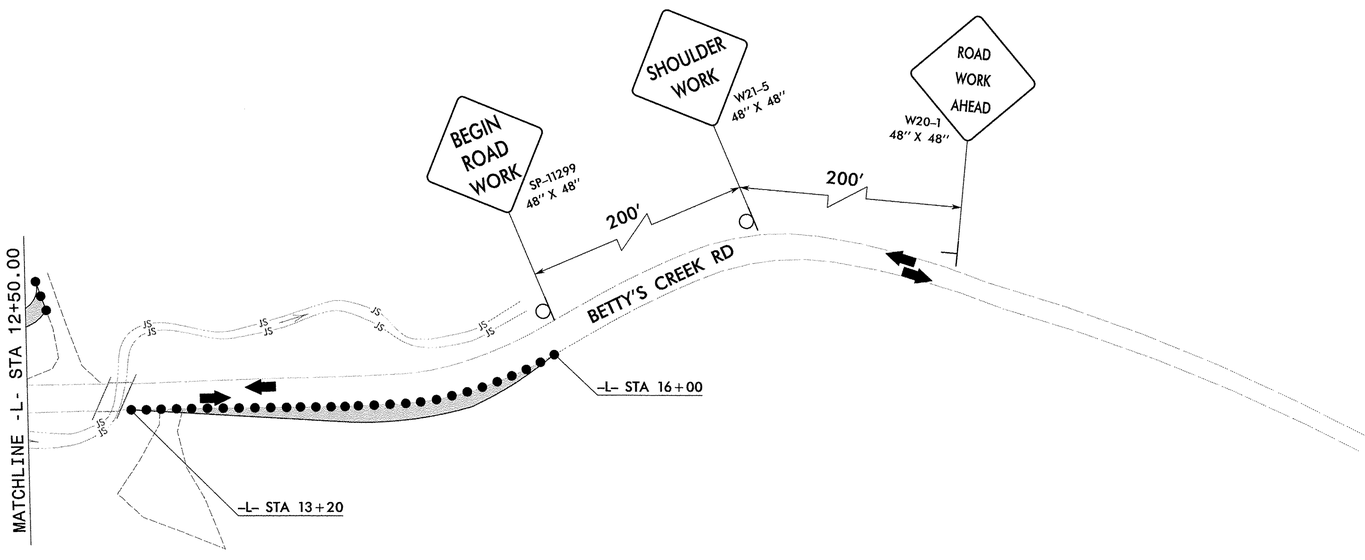

LEGEND

EXISTING ROADWAY

PROPOSED CONSTRUCTION

COMPLETED ROADWAY

GRAPHIC SCALE
50 25 0 50 100
PLANS

AECOM
NC Firm License No.: F-0342
701 Corporate Center Drive
Suite 475 Raleigh, NC 27607
Phone: 919-854-6200

APPROVED:_____ DATE:_____

NORTH CAROLINA PROFESSIONAL SEAL 038501 ENGINEER JOHNNY E. HUGHENS

DIVISION OF HIGHWAYS STATE OF NORTH CAROLINA DEPARTMENT OF TRANSPORTATION WORK ZONE TRAFFIC CONTROL

PHASE I DETAIL

SCALE:	
DATE:	4/22/2013
DWG. BY:	TEH
DESIGN BY:	KJV
REVIEWED BY:	

REVISIONS

CORP. FILE

3:06:23 PM
R:\Traffic\TrafficControl\TCP\49-0282_tcp_phase1_psh.dgn
hildebrandt

PROJ. REFERENCE NO.	SHEET NO.
17BP.14.R.25	TMP-3

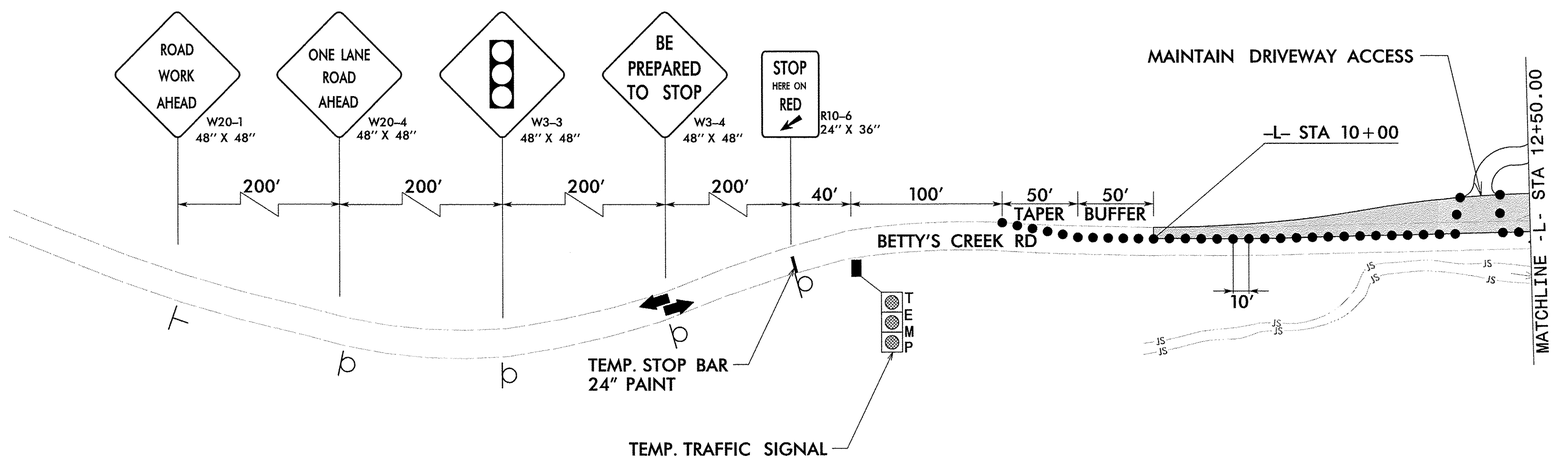

TYPICAL SECTION VIEW

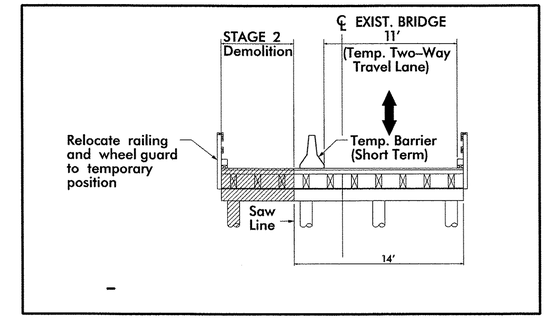

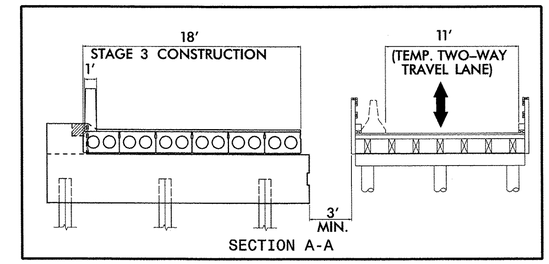

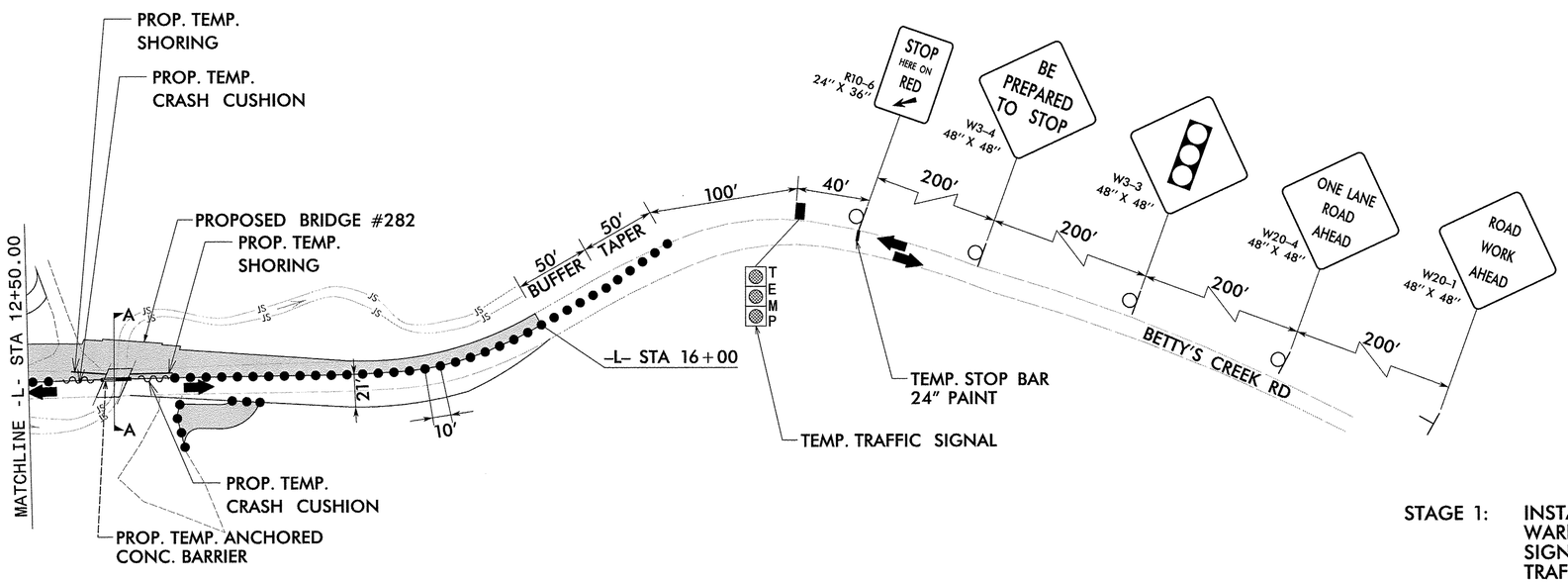

PHASING NOTES

STAGE 1: INSTALL TEMP. SIGNALS, TEMP. STOP BARS, ADVANCED WARNING SIGNS AND TRAFFIC CONTROL DEVICES. IMPLEMENT SIGNAL OPERATION BY SHIFTING TO 1 LANE, 2 WAY TRAFFIC PATTERN.

STAGE 2: REMOVE PART OF EXISTING BRIDGE, PLACE TEMP. BARRIER AND RELOCATE RAILING.

STAGE 3: CONSTRUCT PART OF PROPOSED BRIDGE AND ROADWAY FROM STA 10+00 TO 16+00.

LEGEND

- EXISTING ROADWAY
- PROPOSED CONSTRUCTION
- COMPLETED ROADWAY

GRAPHIC SCALE
50 25 0 50 100
PLANS

AECOM
NC Firm License No.: F-0342
701 Corporate Center Drive
Suite 475 Raleigh, NC 27607
Phone: 919-854-6200

APPROVED: _____ DATE: _____

NORTH CAROLINA PROFESSIONAL SEAL 038501 ENGINEER DONALD T. HILDEBRAND

DIVISION OF HIGHWAYS STATE OF NORTH CAROLINA DEPARTMENT OF TRANSPORTATION WORK ZONE TRAFFIC CONTROL

PHASE II DETAIL

SCALE:
DATE: 4/22/2013
DWG. BY: TEH
DESIGN BY: KJV
REVIEWED BY:

REVISIONS

SHT. NO.

3:06:24 PM
R:\Traffic\TrafficControl\TCP\49-0282_tcp_phase2_psh.dgn
hildebrandt

PROJ. REFERENCE NO.	SHEET NO.
17BP.14.R.25	TMP-4

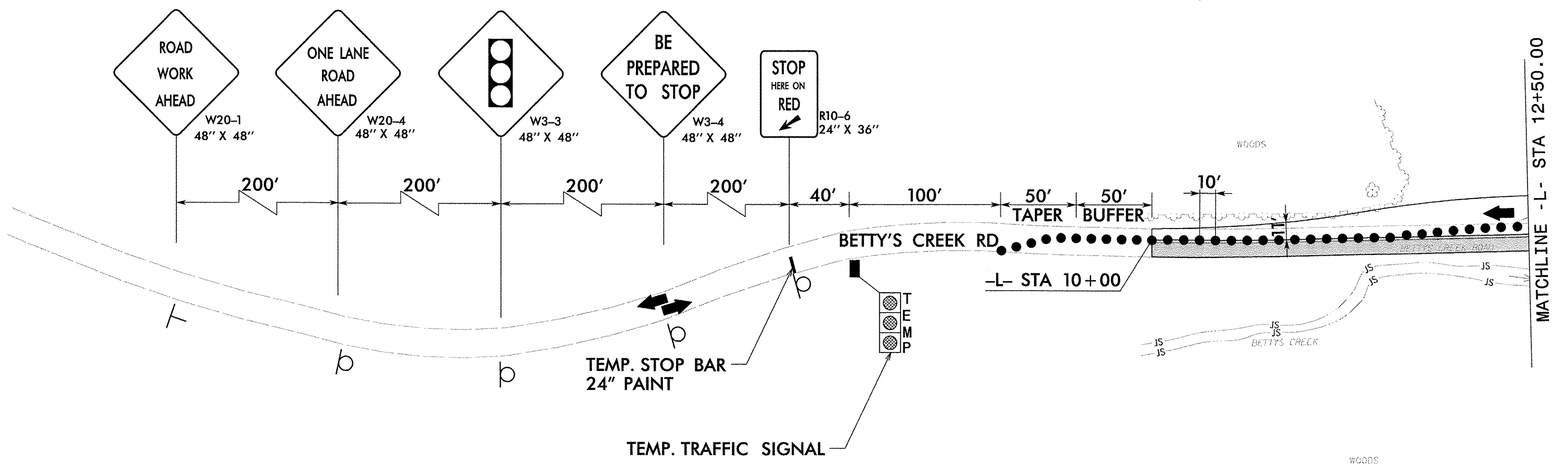

TYPICAL SECTION VIEW

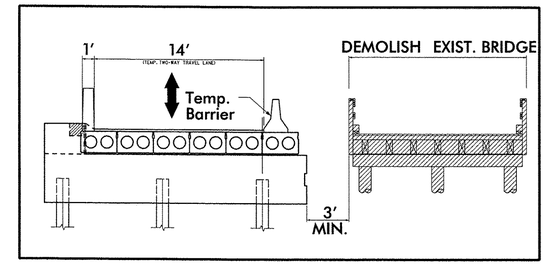

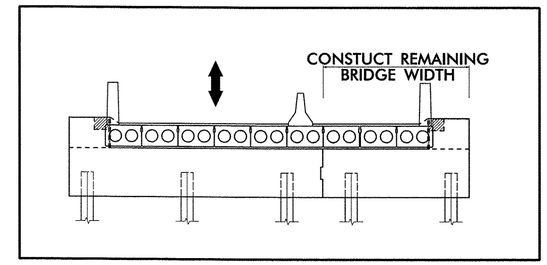

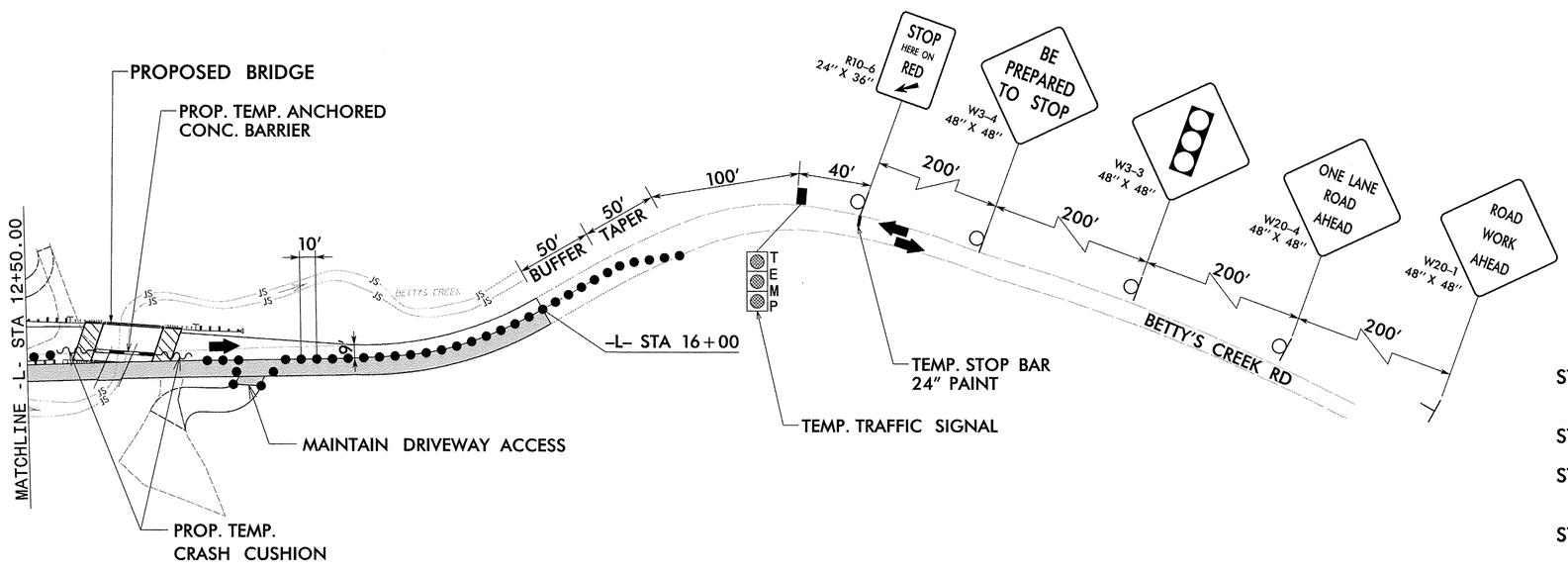

PHASING NOTES

STAGE 1: SHIFT TRAFFIC TO ROADWAY AND BRIDGE CONSTRUCTED DURING PHASE II.

STAGE 2: REMOVE REMAINING EXISTING BRIDGE.

STAGE 3: CONSTRUCT REMAINING PORTION OF PROPOSED BRIDGE AND ROADWAY.

STAGE 4: REMOVE TEMP. SIGNALS, TEMP. STOP BARS, ADVANCED WARNING SIGNS AND TRAFFIC CONTROL DEVICES.

STAGE 5: OPEN PROJECT TO FINAL TRAFFIC PATTERN.

LEGEND

EXISTING ROADWAY

PROPOSED CONSTRUCTION

COMPLETED ROADWAY

GRAPHIC SCALE
50 25 0 50 100
PLANS

AECOM
NC Firm License No.: F-0342
701 Corporate Center Drive
Suite 475 Raleigh, NC 27607
Phone: 919-854-6200

APPROVED: _____ DATE: _____

NORTH CAROLINA PROFESSIONAL ENGINEER SEAL 038501 ENGINEER DAVID E. HUDSPAND

DIVISION OF HIGHWAYS STATE OF NORTH CAROLINA DEPARTMENT OF TRANSPORTATION WORK ZONE TRAFFIC CONTROL

PHASE III DETAIL

SCALE:	
DATE:	4/22/2013
DWG. BY:	TEH
DESIGN BY:	KJV
REVIEWED BY:	

REVISIONS

CONTRACT NO.

3:06:26 PM
R:\Traffic\TrafficControl\TCP\49-0282_tcp_phase3_psh.dgn
nigbergndt

PROJ. REFERENCE NO.	SHEET NO.
17BP.14.R.25	PMP-1

PROJECT MARKING SCHEDULE

BRIDGE 282

SYMBOL	DESCRIPTION	PAY ITEM	PAY ITEM QUANTITY
		THERMOPLASTIC(4", 120 MILS)	
TI	YELLOW DOUBLE CENTER		1200 LF
		THERMOPLASTIC(4", 90 MILS)	
TA	WHITE EDGELINE		1200 LF

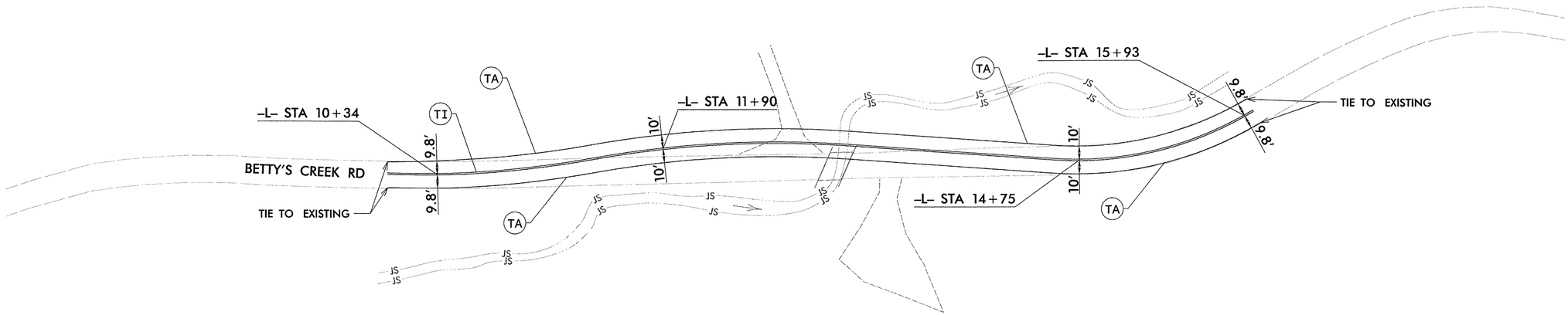

LEGEND

TA WHITE EDGELINE
TI YELLOW DOUBLE CENTER

GRAPHIC SCALE
40 20 0 40 80
PLANS

3:06:27 PM
R:\Traffic\TrafficControl\PMP\49-0282_pmp_psh2.dgn
nlebrand

AECOM
NC Firm License No.: F-0342
701 Corporate Center Drive
Suite 475 Raleigh, NC 27607
Phone: 919-854-6200

APPROVED: _____ DATE: _____

NORTH CAROLINA PROFESSIONAL SEAL 038501 ENGINEER THOMAS E. HILDEBRAND

DIVISION OF HIGHWAYS · STATE OF NORTH CAROLINA · DEPARTMENT OF TRANSPORTATION · WORK ZONE TRAFFIC CONTROL

PAVEMENT MARKING PLAN

SCALE:	
DATE:	4/22/2013
DWG. BY:	TEH
DESIGN BY:	KJV
REVIEWED BY:	

REVISIONS

CADD FILE

PROJECT REFERENCE NO.	SHEET NO.
17BP.14.R.25	SIG-1

PHASING DIAGRAM

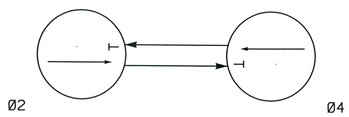

PHASING DIAGRAM DETECTION LEGEND

- DETECTED MOVEMENT
- UNDETECTED MOVEMENT (OVERLAP)

TABLE OF OPERATION

SIGNAL FACE	PHASE Ø2	PHASE Ø4	FLASH
21, 22	G	R	R
41, 42	R	G	R

SIGNAL FACE I.D.

All Heads L.E.D.

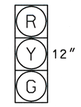

21, 22
41, 42

LOOP & DETECTOR INSTALLATION CHART

INDUCTIVE LOOPS					DETECTOR PROGRAMMING		
LOOP	SIZE (FT)	DISTANCE FROM STOPBAR (FT)	TURNS	NEW LOOP	PHASE	CALLING	EXTENSION
2A	6X40	-5	2-4-2	X	2	X	X
4A	6X40	-5	2-4-2	X	4	X	X

2 Phase
Actuated
Temporary Signal

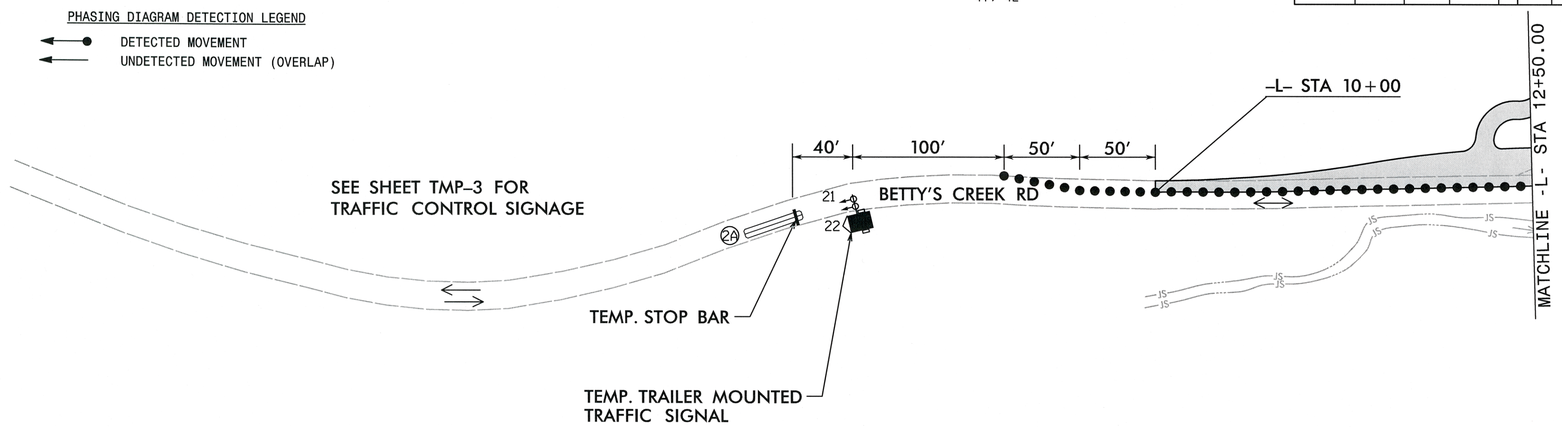

NOTES

1. REFER TO "ROADWAY STANDARD DRAWINGS NCDOT" DATED JANUARY 2012 AND "STANDARD SPECIFICATIONS FOR ROADS AND STRUCTUTES" DATED JULY 2012.
2. SEE SPECIAL PROVISION FOR DETAILS ON PORTABLE TRAFFIC SIGNAL SYSTEM.
3. MICROWAVE DETECTION OR VIDEO DETECTION MAY BE USED IN LEIU OF LOOP DETECTION AS SHOWN ON THE PLAN.

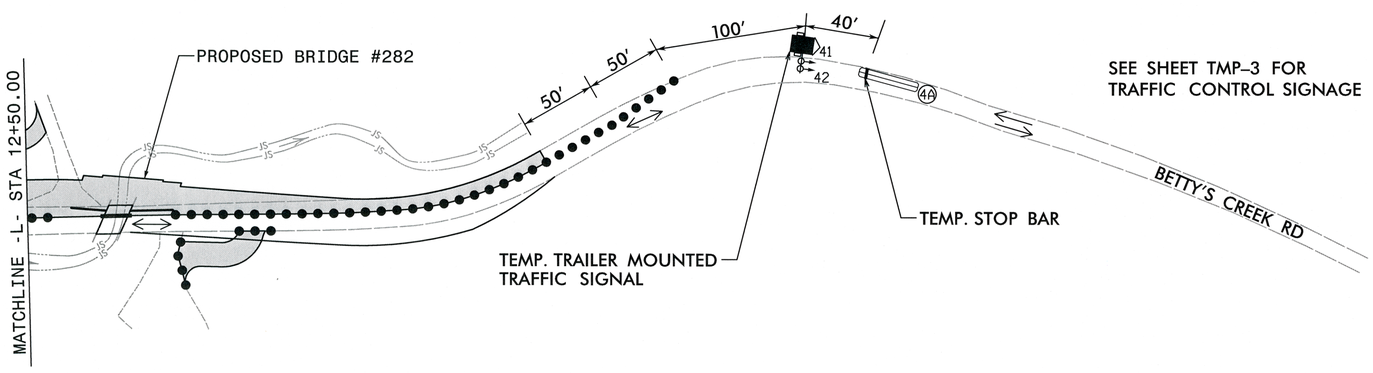

TIMING CHART

PHASE	Ø2	Ø4
MINIMUM GREEN*	15 SEC.	15 SEC.
VEHICLE EXTENSION *	5 SEC.	5 SEC.
YELLOW CHANGE INT.	3.5 SEC.	3.1 SEC.
RED CLEARANCE	29.5 SEC.	29.5 SEC.
MAXIMUM GREEN*	30 SEC.	30 SEC.
RECALL POSITION	RECALL	NONE

* These values may be field adjusted. Do not adjust Min Green and Extension times for phases 2 and 4 lower than what is shown.

LEGEND

PROPOSED		EXISTING
	Traffic Signal Head	
	Modified Signal Head	N/A
	Directional Arrow	
	Inductive Loop Detector	
	Trailier Mounted Signal	N/A

TEMPORARY SIGNAL

AECOM
NC Firm License No.: F-0342
701 Corporate Center Drive
Suite 475 Raleigh, NC 27607
Phone: 919-854-6200

Prepared in the Offices of:
Transportation Mobility and Safety Division
Signal Design Section
750 N.Greenfield Pkwy,Garner,NC 27529

SCALE 0 50' 1" = 50'

TEMPORARY SIGNAL
BRIDGE 282
PAHSE 2 CONSTRUCTION

JACKSON COUNTY DIVISION 14

PLAN DATE:	OCTOBER 2012	REVIEWED BY:	
PREPARED BY:	S. W. COX	REVIEWED BY:	S. NANDAGIRI

REVISIONS	INIT.	DATE

SEAL
NORTH CAROLINA PROFESSIONAL SEAL 37856 ENGINEER STEVEN W. COX
4-22-13

SIGNATURE	DATE
SIG. INVENTORY NO.	N/A

10:25:18 AM
Q:\60238772\400_Tech_Info_Disc_Files\450_NCDOTS\dTechDesFiles\BRG.282\Traffic\TrafficControl\TCP\49-0282_sig_phase2_psh.dgn
cox81

PROJECT REFERENCE NO.	SHEET NO.
17BP.14.R.25	SIG-2

PHASING DIAGRAM

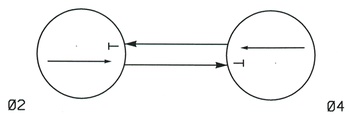

PHASING DIAGRAM DETECTION LEGEND

DETECTED MOVEMENT

UNDETECTED MOVEMENT (OVERLAP)

TABLE OF OPERATION

SIGNAL FACE	PHASE Ø2	PHASE Ø4	FLASH
21, 22	G	R	R
41, 42	R	G	R

SIGNAL FACE I.D.

All Heads L.E.D.

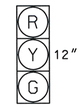

21, 22
41, 42

LOOP & DETECTOR INSTALLATION CHART

INDUCTIVE LOOPS					DETECTOR PROGRAMMING		
LOOP	SIZE (FT)	DISTANCE FROM STOPBAR (FT)	TURNS	NEW LOOP	PHASE	CALLING	EXTENSION
2A	6X40	-5	2-4-2	-	2	X	X
4A	6X40	-5	2-4-2	-	4	X	X

2 Phase
Actuated
Temporary Signal

NOTES

1. REFER TO "ROADWAY STANDARD DRAWINGS NCDOT" DATED JANUARY 2012 AND "STANDARD SPECIFICATIONS FOR ROADS AND STRUCTUTES" DATED JULY 2012.
2. SEE SPECIAL PROVISION FOR DETAILS ON PORTABLE TRAFFIC SIGNAL SYSTEM.
3. MICROWAVE DETECTION OR VIDEO DETECTION MAY BE USED IN LEIU OF LOOP DETECTION AS SHOWN ON THE PLAN.

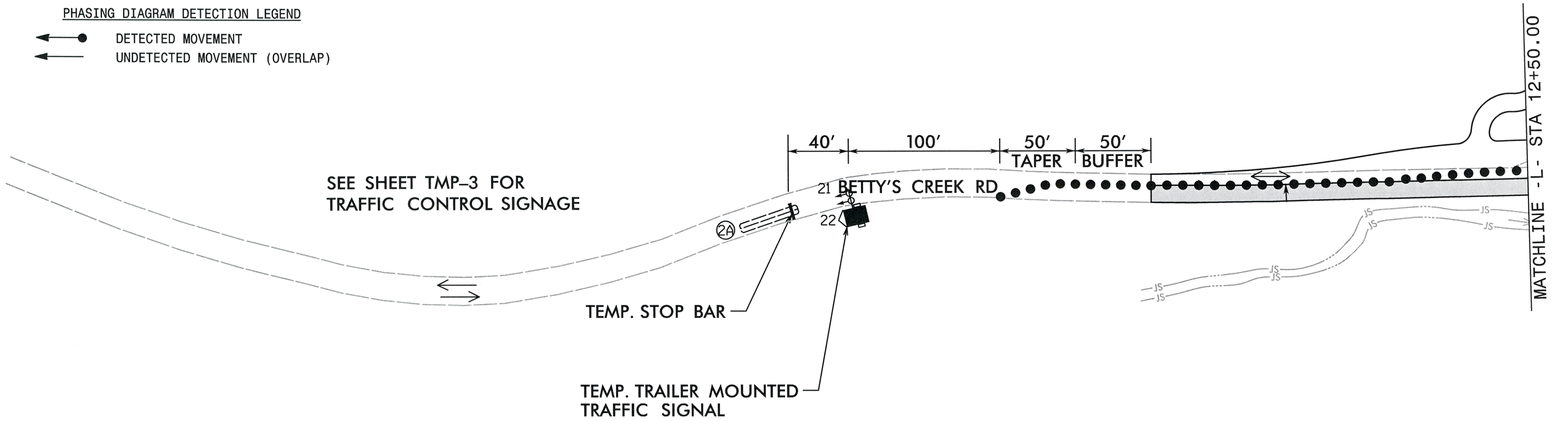

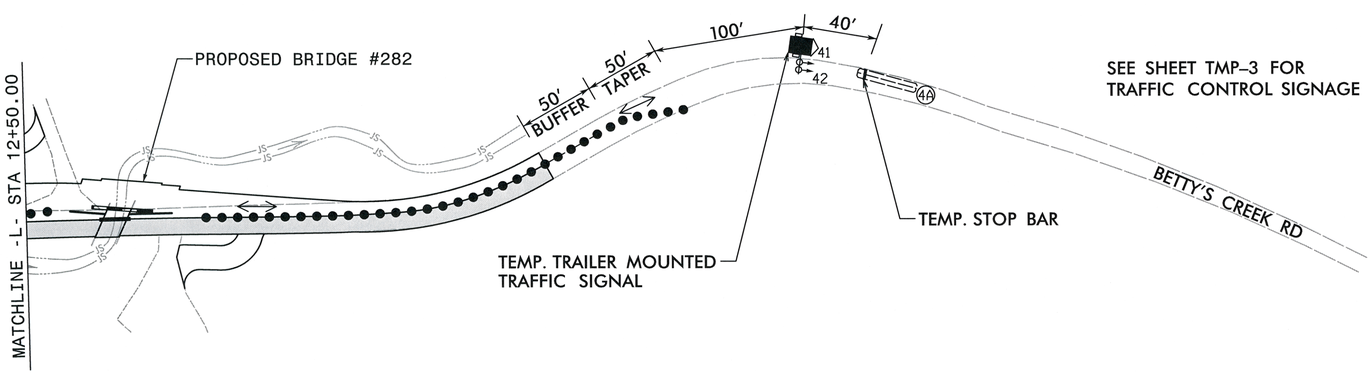

TIMING CHART

PHASE	Ø2	Ø4
MINIMUM GREEN*	15 SEC.	15 SEC.
VEHICLE EXTENSION *	5 SEC.	5 SEC.
YELLOW CHANGE INT.	3.5 SEC.	3.1 SEC.
RED CLEARANCE	29.5 SEC.	29.5 SEC.
MAXIMUM GREEN*	30 SEC.	30 SEC.
RECALL POSITION	RECALL	NONE

* These values may be field adjusted. Do not adjust Min Green and Extension times for phases 2 and 4 lower than what is shown.

LEGEND

PROPOSED		EXISTING
	Traffic Signal Head	
	Modified Signal Head	N/A
	Directional Arrow	
	Inductive Loop Detector	
	Trailier Mounted Signal	N/A

TEMPORARY SIGNAL

AECOM
NC Firm License No.: F-0342
701 Corporate Center Drive
Suite 475 Raleigh, NC 27607
Phone: 919-854-6200

Prepared in the Offices of:
Transportation Mobility and Safety Division
Signal Design Section
750 N.Greenfield Pkwy,Garner,NC 27529

TEMPORARY SIGNAL
BRIDGE 282
PAHSE 3 CONSTRUCTION

JACKSON COUNTY DIVISION 14

PLAN DATE: OCTOBER 2012 REVIEWED BY:
PREPARED BY: S. W. COX REVIEWED BY: S. NANDAGIRI

REVISIONS	INIT.	DATE

SCALE 0 50' 1" = 50'

SEAL
NORTH CAROLINA PROFESSIONAL SEAL 37856 ENGINEER STEVEN W. COX
4-22-13
SIGNATURE DATE
SIG. INVENTORY NO. N/A

10:28:15 AM
Q:\#50238172\#400_Tech_Info_Disc_Files\#50_NCDOTStdTechDocFiles\#BRG_282\#Traffic\#TrafficControl\#TCP\#49-0282_sig_phase3_psh.dgn
coxsi

EROSION CONTROL PLAN

PROJECT REFERENCE NO.	SHEET NO.
17BP.14.R.25	EC-1

Prepared in the Office of: AECOM
NC FIRM LICENSE No: F-0342
701 Corporate Center Drive, Suite 475
Raleigh, NC 27607
(919) 854-6200 - (919) 854-6259(FAX)

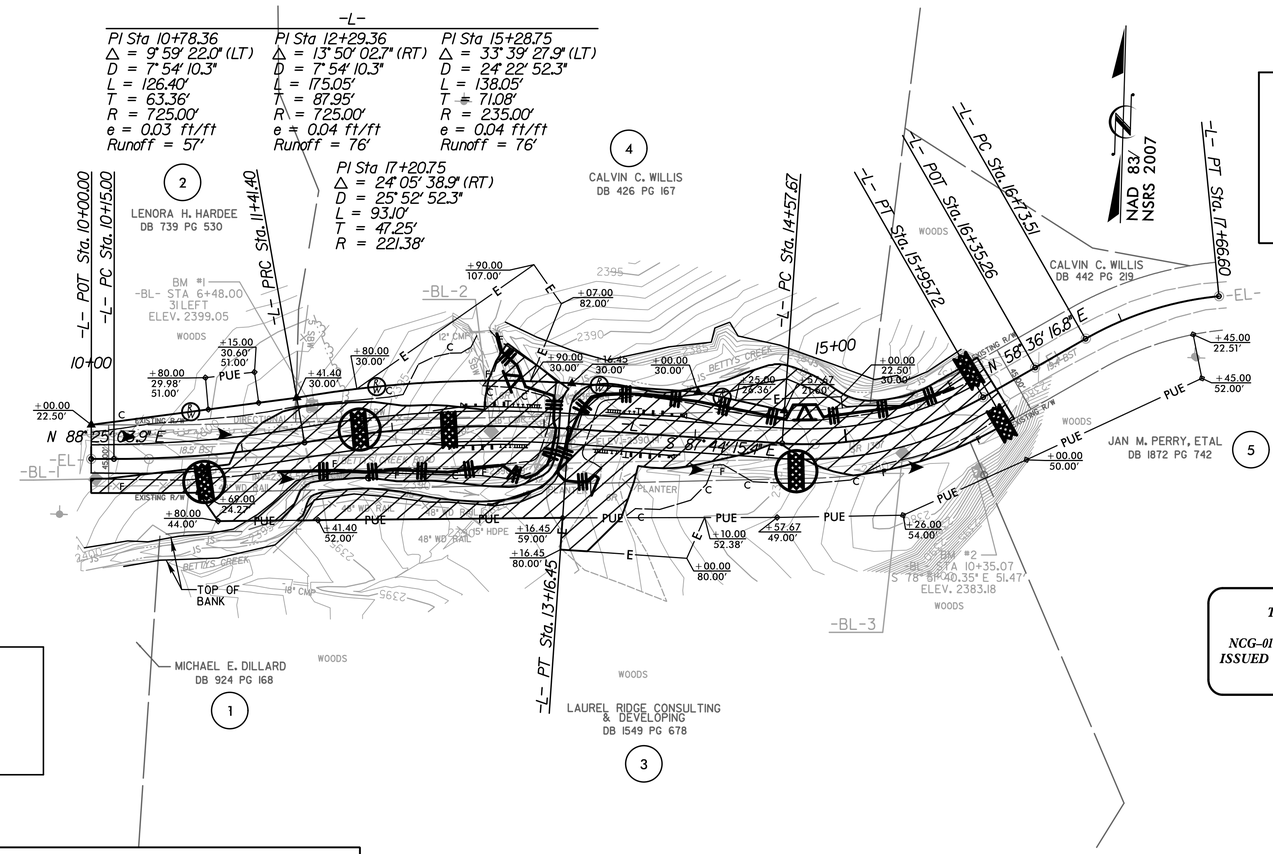

ROADSIDE ENVIRONMENTAL UNIT
DEPARTMENT OF TRANSPORTATION
DIVISION OF HIGHWAYS
RALEIGH, N.C.

2012 STANDARD SPECIFICATIONS

THIS PROJECT HAS BEEN DESIGNED TO SENSITIVE WATERSHED STANDARDS.

ENVIRONMENTALLY SENSITIVE AREA(S) EXIST ON THIS PROJECT

Refer To E. C. Special Provisions for Special Considerations.

THESE EROSION AND SEDIMENT CONTROL PLANS COMPLY WITH THE REGULATIONS SET FORTH BY THE NCG-010000 GENERAL CONSTRUCTION PERMIT EFFECTIVE AUGUST 3, 2011 ISSUED BY THE NORTH CAROLINA DEPARTMENT OF ENVIRONMENT AND NATURAL RESOURCES DIVISION OF WATER QUALITY.

ENVIRONMENTALLY SENSITIVE AREA
SEE PROJECT SPECIAL PROVISIONS

Std. #	Description	Symbol
1605.01	Temporary Silt Fence	
1606.01	Special Sediment Control Fence	
1622.01	Temporary Berms and Slope Drains	
1630.02	Silt Basin Type B	
1630.03	Temporary Silt Ditch	TSD
1630.05	Temporary Diversion	TD
1630.06	Special Stilling Basin	
1632.03	Rock Inlet Sediment Trap Type C	
1633.01	Temporary Rock Silt Check Type-A	
	Temporary Rock Silt Check Type-A with Matting and Polyacrylamide (PAM)	
1633.02	Temporary Rock Silt Check Type-B	
1635.01	Rock Pipe Inlet Sediment Trap Type-B	

NOTES: ANY DEVIATION FROM OPTIONS GIVEN WILL REQUIRE PRIOR APPROVAL BY ENGINEER.

ADDITIONAL EROSION CONTROL DEVICES MAY NEED TO BE INSTALLED AS DIRECTED BY THE ENGINEER.

Rene Remy
LEVEL III NAME

3135
LEVEL III CERTIFICATION NO.

GRAPHIC SCALE
25 0 50
PLANS

2012 STANDARD DRAWINGS

1604.01	Railroad Erosion Control Detail	1632.01	Rock Inlet Sediment Trap Type A
1605.01	Temporary Silt Fence	1632.02	Rock Inlet Sediment Trap Type B
1606.01	Special Sediment Control Fence	1632.03	Rock Inlet Sediment Trap Type C
1607.01	Gravel Construction Entrance	1633.01	Temporary Rock Silt Check Type A
1622.01	Temporary Berms and Slope Drains	1633.02	Temporary Rock Silt Check Type B
1630.01	Riser Basin	1634.01	Temporary Rock Sediment Dam Type A
1630.02	Silt Basin Type B	1634.02	Temporary Rock Sediment Dam Type B
1630.03	Temporary Silt Ditch	1635.01	Rock Pipe Inlet Sediment Trap Type A
1630.04	Stilling Basin	1635.02	Rock Pipe Inlet Sediment Trap Type B
1630.05	Temporary Diversion	1640.01	Coir Fiber Baffle
1630.06	Special Stilling Basin	1645.01	Temporary Stream Crossing
1631.01	Matting Installation		

REVISIONS

8/17/99

USER: remy
DATE: 5/1/2013
TIME: 9:44:20 AM
DGN: R:\Environmental\Design\R5-0292_ru_sc01.dgn

EROSION CONTROL PLAN

PROJECT REFERENCE NO.	SHEET NO.
17BP.14.R.25	EC-2

Prepared in the Office of: AECOM — NC FIRM LICENSE No: F-0342, 701 Corporate Center Drive, Suite 475, Raleigh, NC 27607, (919) 854-6200 - (919) 854-6259(FAX)

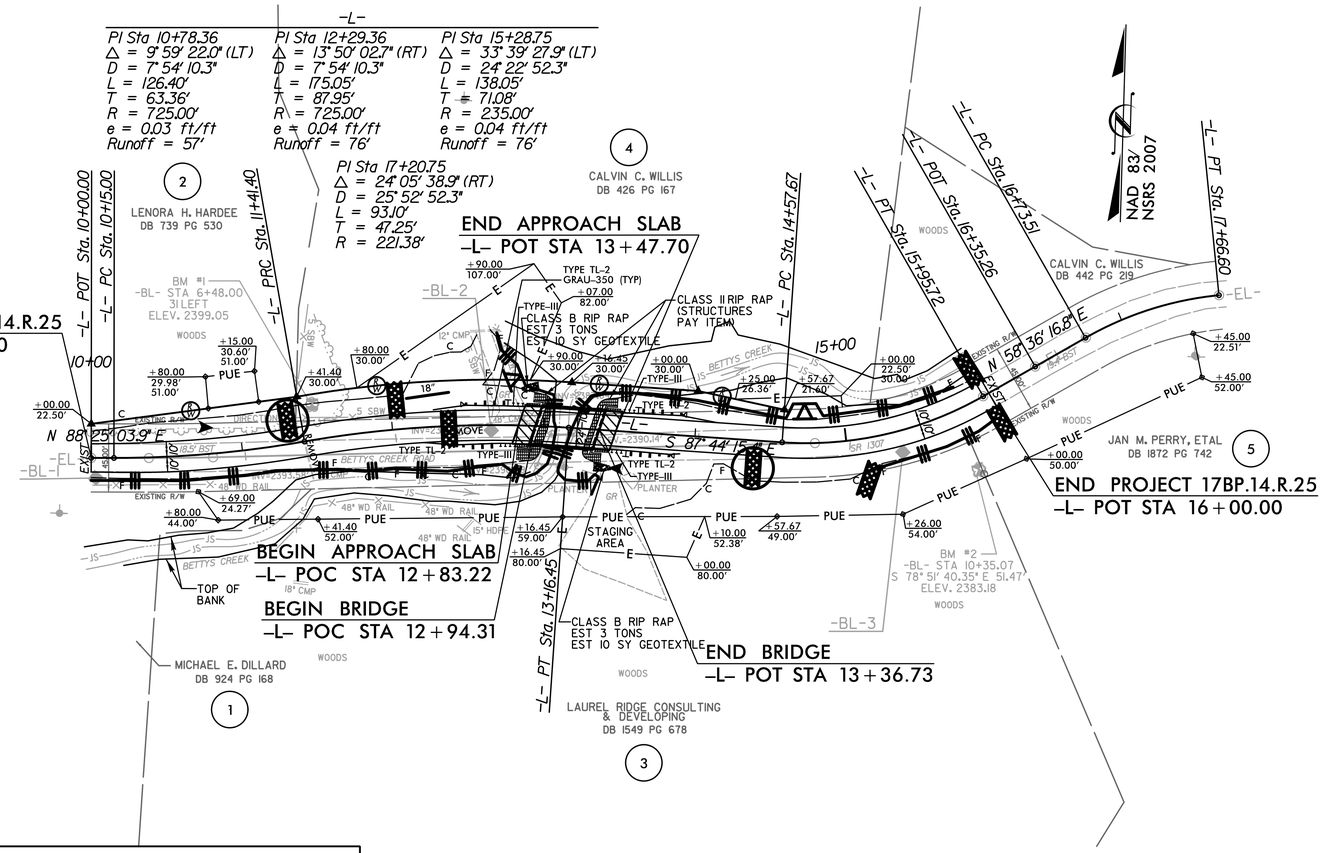

Std. #	Description	Symbol
1605.01	Temporary Silt Fence	
1606.01	Special Sediment Control Fence	
1622.01	Temporary Berms and Slope Drains	
1630.02	Silt Basin Type B	
1630.03	Temporary Silt Ditch	TSD
1630.05	Temporary Diversion	TD
1630.06	Special Stilling Basin	
1632.03	Rock Inlet Sediment Trap Type C	
1633.01	Temporary Rock Silt Check Type-A	
	Temporary Rock Silt Check Type-A with Matting and Polyacrylamide (PAM)	
1633.02	Temporary Rock Silt Check Type-B	
1635.01	Rock Pipe Inlet Sediment Trap Type-B	

GRAPHIC SCALE

25 0 50

PLANS

2012 STANDARD DRAWINGS

1604.01	Railroad Erosion Control Detail	1632.01	Rock Inlet Sediment Trap Type A
1605.01	Temporary Silt Fence	1632.02	Rock Inlet Sediment Trap Type B
1606.01	Special Sediment Control Fence	1632.03	Rock Inlet Sediment Trap Type C
1607.01	Gravel Construction Entrance	1633.01	Temporary Rock Silt Check Type A
1622.01	Temporary Berms and Slope Drains	1633.02	Temporary Rock Silt Check Type B
1630.01	Riser Basin	1634.01	Temporary Rock Sediment Dam Type A
1630.02	Silt Basin Type B	1634.02	Temporary Rock Sediment Dam Type B
1630.03	Temporary Silt Ditch	1635.01	Rock Pipe Inlet Sediment Trap Type A
1630.04	Stilling Basin	1635.02	Rock Pipe Inlet Sediment Trap Type B
1630.05	Temporary Diversion	1640.01	Coir Fiber Baffle
1630.06	Special Stilling Basin	1645.01	Temporary Stream Crossing
1631.01	Matting Installation		

8/17/99

REVISIONS

USER: rwyr
DATE: 5/1/2013
TIME: 9:44:46 AM
DGN: R:\Environmental\Design\R5-0292_rev_sc02.dgn

PROJECT REFERENCE NO.	SHEET NO.
17BP.14.R.25	EC-3

Prepared in the Office of: AECOM
NC FIRM LICENSE No: F-0342
701 Corporate Center Drive, Suite 475
Raleigh, NC 27607
(919) 854-6200 (919) 854-6259(FAX)

DIVISION OF HIGHWAYS
STATE OF NORTH CAROLINA

SOIL STABILIZATION TIMEFRAMES

SITE DESCRIPTION	STABILIZATION TIME	TIMEFRAME EXCEPTIONS
PERIMETER DIKES, SWALES, DITCHES AND SLOPES	7 DAYS	NONE
HIGH QUALITY WATER (HQW) ZONES	7 DAYS	NONE
SLOPES STEEPER THAN 3:1	7 DAYS	IF SLOPES ARE 10' OR LESS IN LENGTH AND ARE NOT STEEPER THAN 2:1, 14 DAYS ARE ALLOWED.
SLOPES 3:1 OR FLATTER	14 DAYS	7 DAYS FOR SLOPES GREATER THAN 50' IN LENGTH.
ALL OTHER AREAS WITH SLOPES FLATTER THAN 4:1	14 DAYS	NONE, EXCEPT FOR PERIMETERS AND HQW ZONES.

MATTING FOR EROSION CONTROL

CONST SHEET NO.	LINE	FROM STATION	TO STATION	SIDE	ESTIMATE (SY)
1	-L-	10+00	12+10	L	250
1	-L-	13+40	13+80	R	60
1	DRIVE	13+80	14+00	R	10
			SUBTOTAL		320
	ADDITIONAL MATTING TO BE INSTALLED				2180
				TOTAL	2500
				SAY	2500

PERMANENT SOIL REINFORCEMENT MAT

CONST SHEET NO.	LINE	FROM STATION	TO STATION	SIDE	ESTIMATE (SY)
1	-L-	12+40	12+80	L	50
1	-L- TEMP WIDEN	13+80	15+40	R	145
1	DRIVE	12+20	15+40	L	15
			SUBTOTAL		210
		ADDITIONAL PSRM TO BE INSTALLED			
				TOTAL	210
				SAY	210

REVISIONS

USER: rwayr
DATE: 4/22/2013
TIME: 10:25:46 AM
DGN: R:\Environmental\Design\49-0282_rw_ec03.dgn

PROJECT REFERENCE NO.	SHEET NO.
17BP.14.R.25	UO–1
R/W SHEET NO.	
ROADWAY DESIGN ENGINEER	HYDRAULICS ENGINEER

Prepared in the Office of: AECOM
NC FIRM LICENSE No: F-0342
701 Corporate Center Drive, Suite 475
Raleigh, NC 27607
(919) 854-6200 - (919) 854-6259(FAX)

REVISIONS

8/17/93

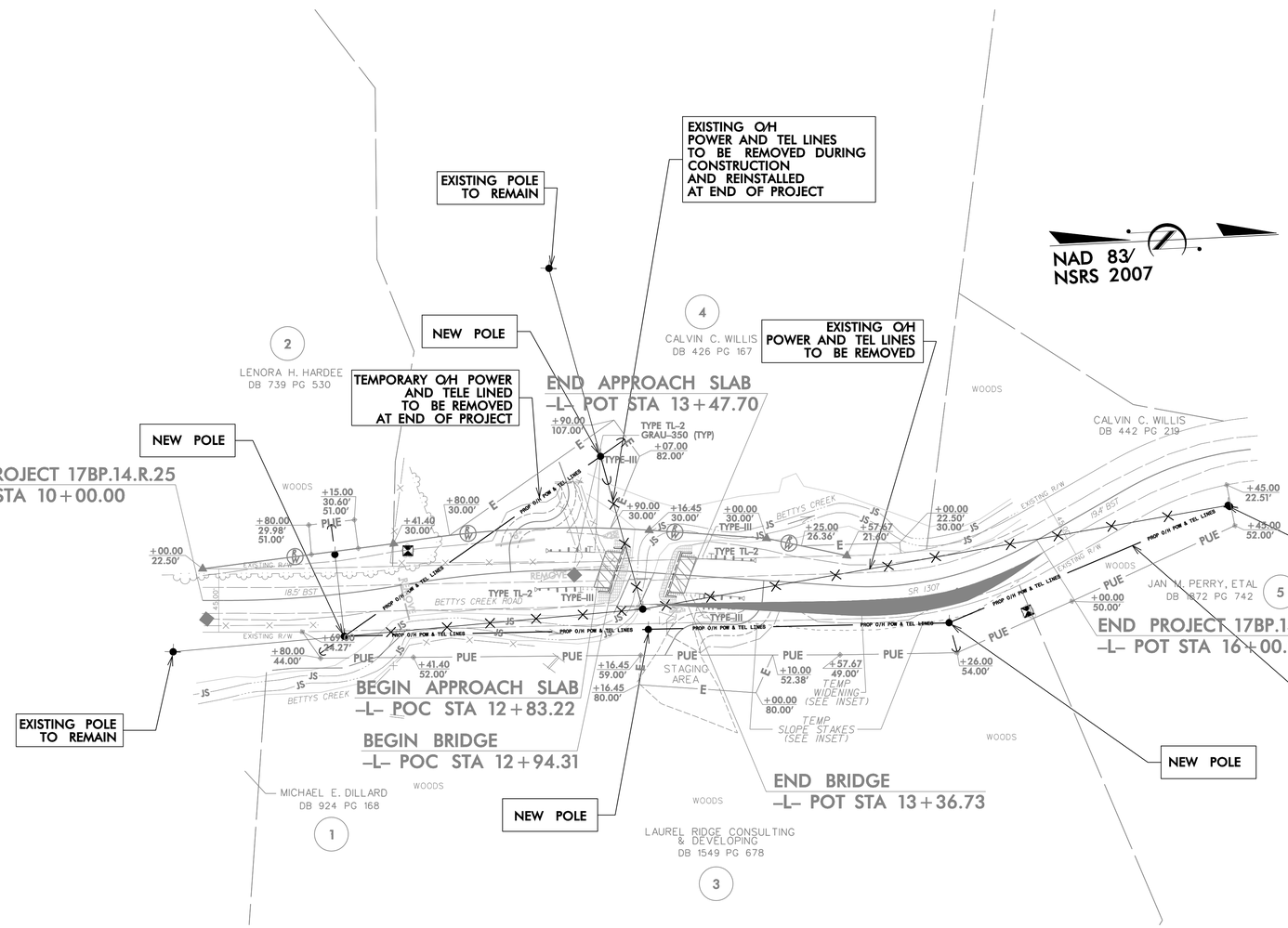

USER: steffensb
DATE: 4/18/2013
TIME: 4:04:58 PM
DGN: 49-0282_uo_sht04.dgn

PROJ. REFERENCE NO.	SHEET NO.
17BP.14.R.25	X-1A

STATE OF NORTH CAROLINA
DIVISION OF HIGHWAYS

NOTE: EMBANKMENT COLUMN DOES NOT INCLUDE BACKFILL FOR UNDERCUT

CROSS-SECTION SUMMARY

Station PHASE 1 L-Temp Widen.	Uncl. Exc. (cu. yd.)	Embt (cu. yd.)	Station PHASE 2 L	Uncl. Exc. (cu. yd.)	Embt (cu. yd.)	Station PHASE 3 L	Uncl. Exc. (cu. yd.)	Embt (cu. yd.)
13+20.00			10+00.00			10+00.00		
13+40.00	1	0	10+20.00	1	1	10+20.00	0	0
13+60.00	1	0	10+40.00	3	2	10+40.00	0	1
13+80.00	2	1	10+60.00	6	3	10+60.00	0	1
14+00.00	4	2	10+80.00	8	3	10+80.00	0	1
14+20.00	7	3	11+00.00	9	3	11+00.00	0	1
14+40.00	11	2	11+20.00	10	3	11+20.00	0	1
14+60.00	13	2	11+40.00	13	2	11+40.00	0	0
14+80.00	10	2	11+60.00	14	2	11+60.00	0	0
15+00.00	6	4	11+80.00	9	5	11+80.00	0	0
15+20.00	3	6	12+00.00	5	11	12+00.00	0	0
15+40.00	3	7	12+20.00	4	27	12+20.00	0	0
15+60.00	2	5	12+40.00	5	39	12+40.00	1	0
15+80.00	2	2	12+60.00	7	34	12+60.00	0	1
16+00.00	1	1	12+80.00	6	16	12+80.00	0	1
			12+94.31	4	3	12+94.31	0	1
			13+02.87	1	1	13+02.87	0	0
			13+30.46			13+30.46		
			13+36.73	0	3	13+36.73	3	0
			13+40.00	0	4	13+40.00	4	0
			13+60.00	0	28	13+60.00	15	2
			13+80.00	0	29	13+80.00	8	7
			14+00.00	0	21	14+00.00	6	15
			14+20.00	0	14	14+20.00	6	16
			14+40.00	0	7	14+40.00	7	14
			14+60.00	0	3	14+60.00	7	15
			14+80.00	0	1	14+80.00	9	13
			15+00.00	0	2	15+00.00	10	12
			15+20.00	0	2	15+20.00	11	9
			15+40.00	0	1	15+40.00	12	7
			15+60.00	0	1	15+60.00	10	5
			15+80.00	0	1	15+80.00	5	2
			16+00.00	0	0	16+00.00	2	1

Approximate quantities only. Unclassified excavation, borrow excavation, fine grading, clearing and grubbing, and removal of existing pavement will be paid for at the lump sum price for "Grading".

1:31:35 PM
r:\roadway\Xsc\49-0282_rdy_xpl_1.dgn
roquec

10/26/98

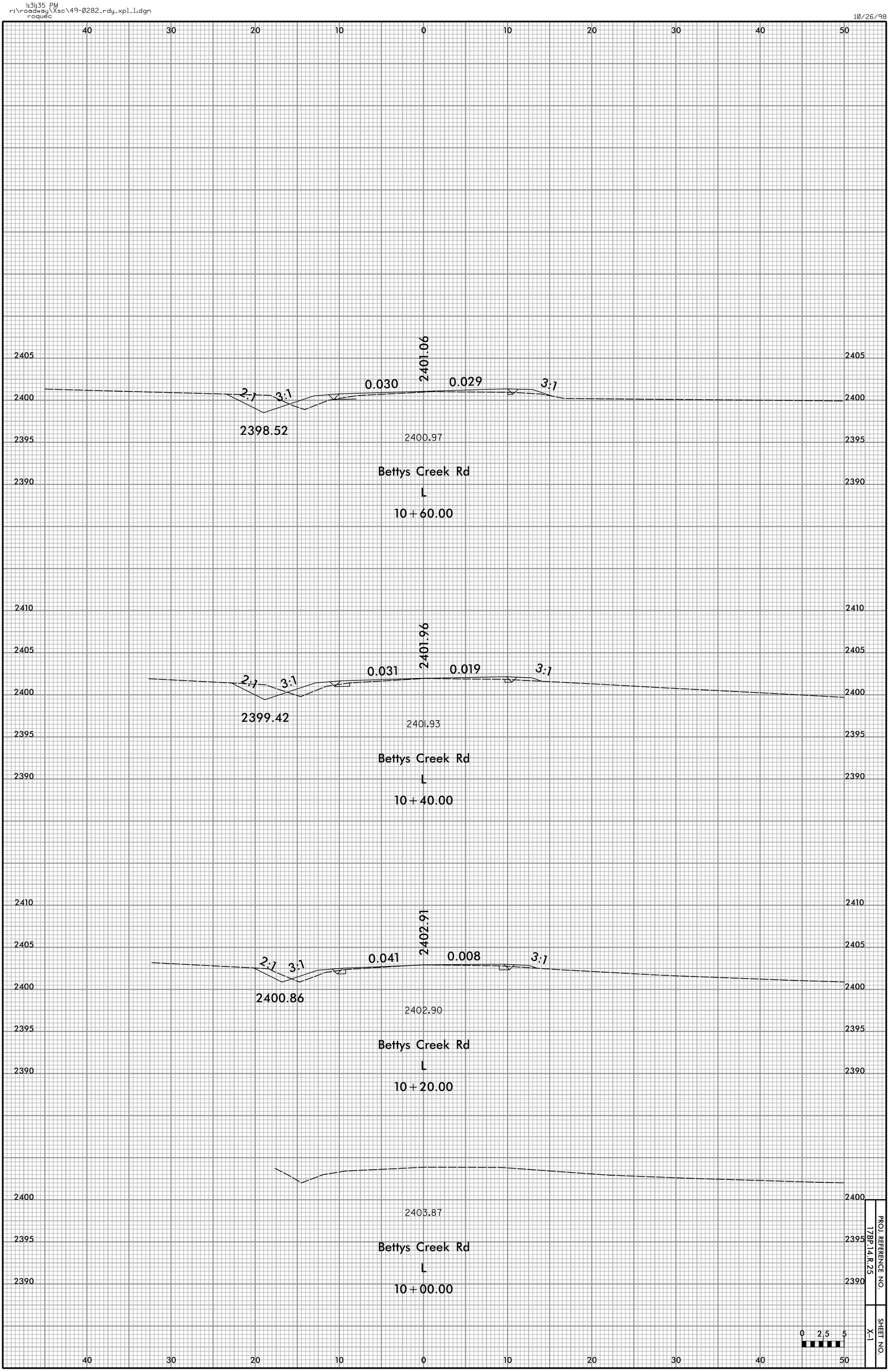

PROJ. REFERENCE NO.
17BP.14.R.25

SHEET NO.
X-1

1:31:35 PM
r:\roadway\Xsc\49-0282_rdy_xpl_1.dgn
roquec

10/26/98

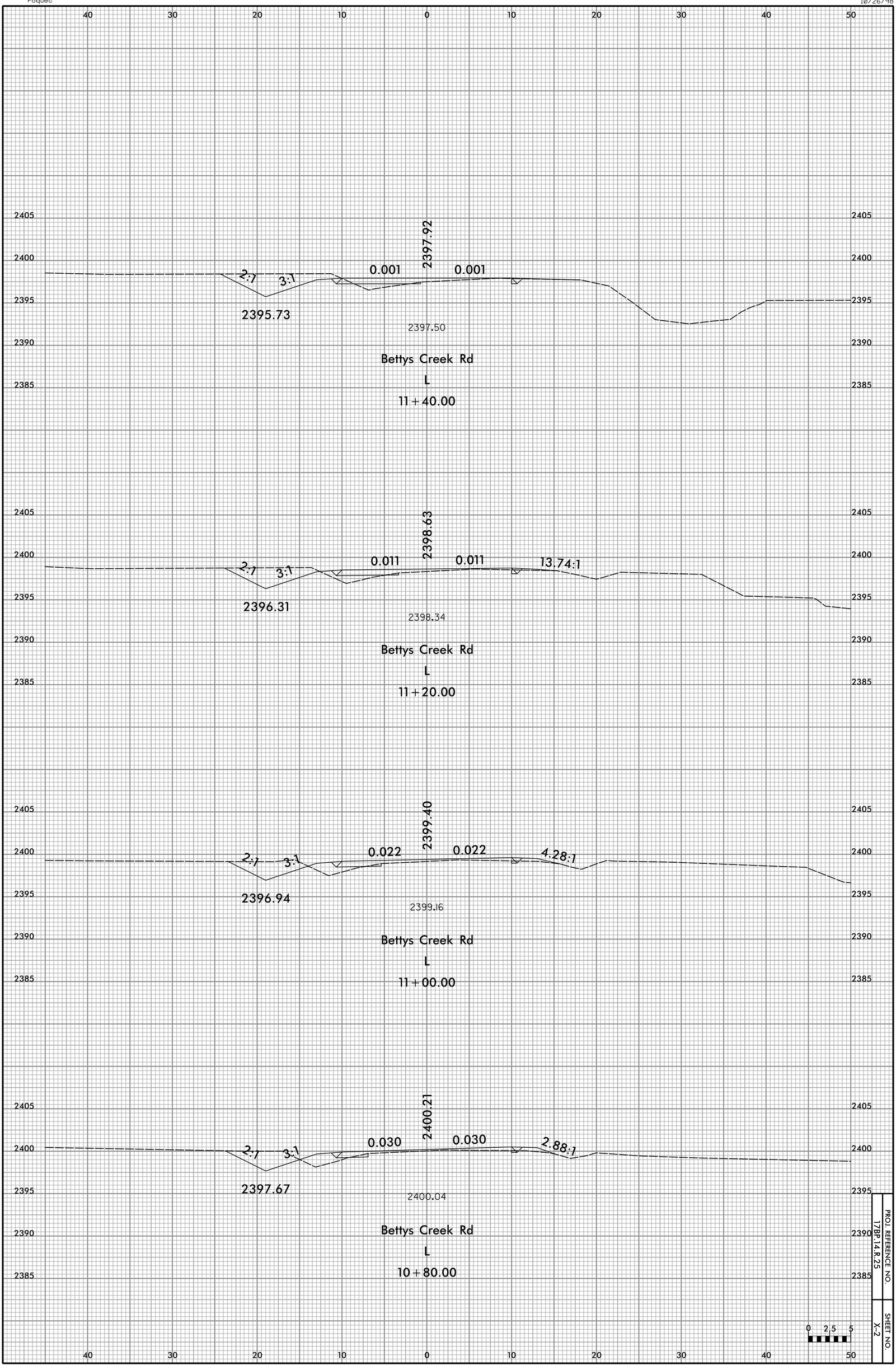

PROJ. REFERENCE NO.
17BP.14.R.25

SHEET NO.
X-2

1:31:35 PM
r:\roadway\Xsc\49-0282_rdy_xpl_1.dgn
roquec

10/26/98

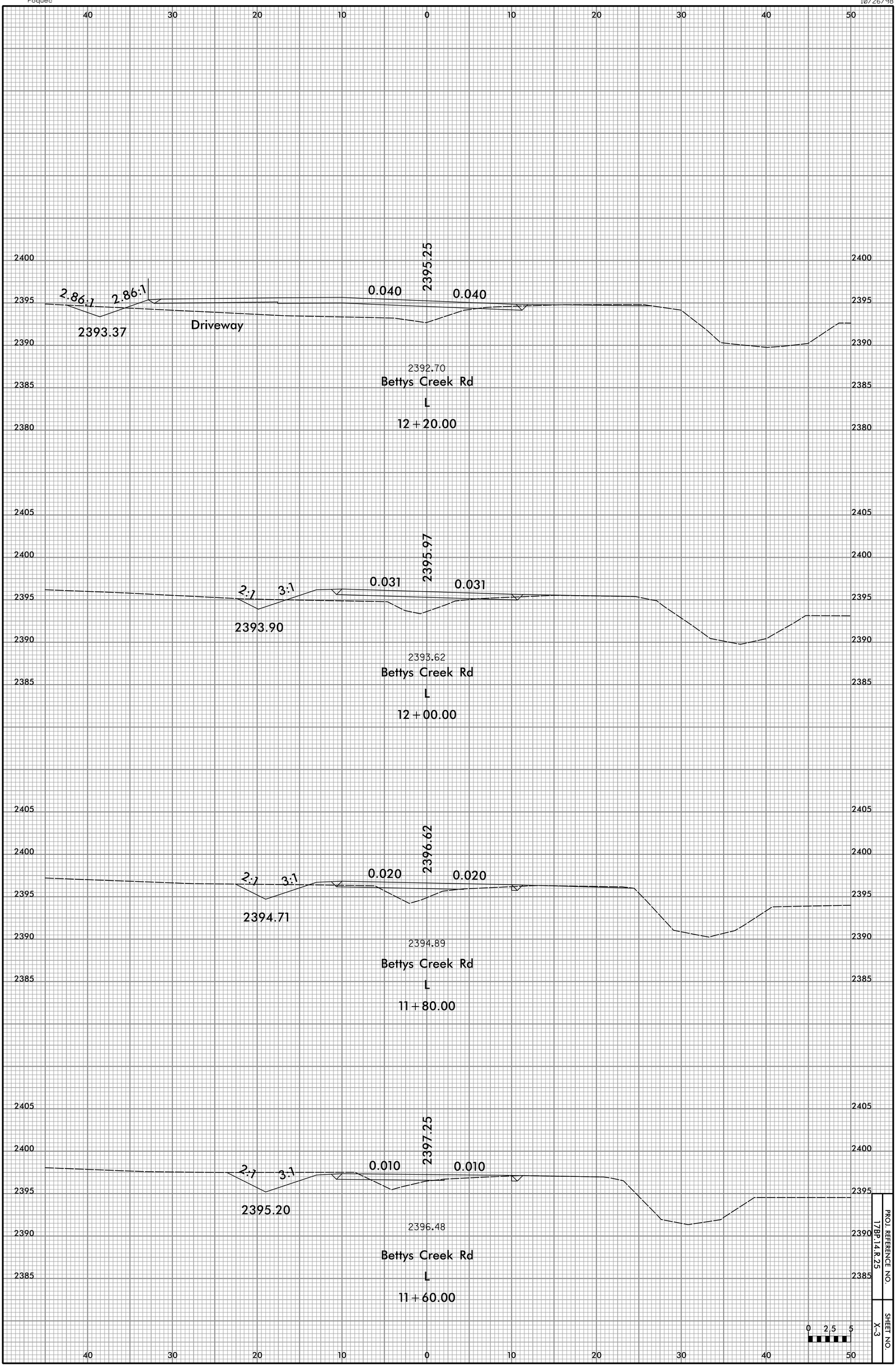

PROJ. REFERENCE NO.
17BP.14.R.25

SHEET NO.
X-3

1:31:36 PM
r:\roadway\Xsc\49-0282_rdy_xpl_1.dgn
roquec

10/26/98

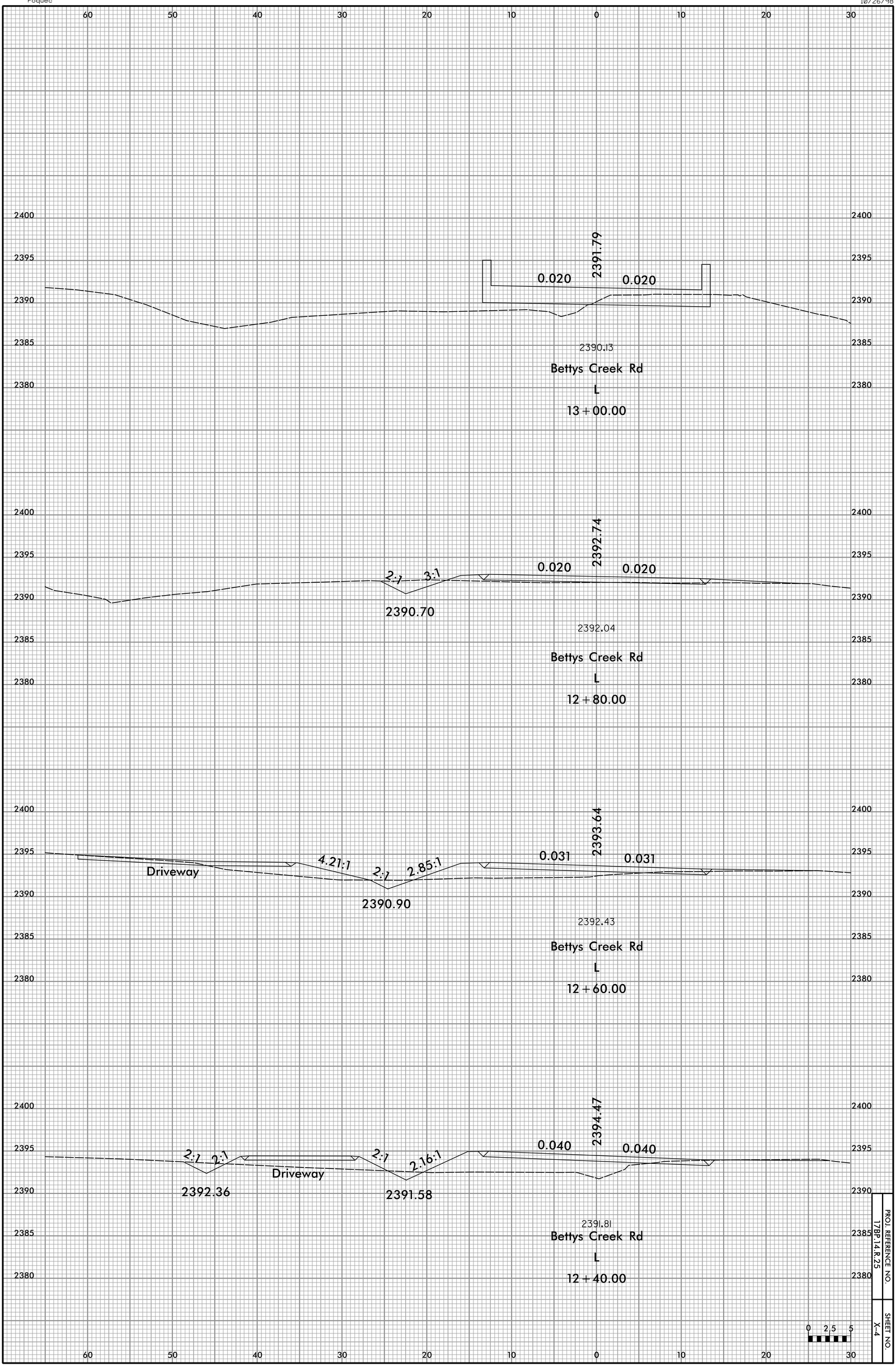

PROJ. REFERENCE NO.
17BP.14.R.25

SHEET NO.
X-4

1:31:36 PM
r:\roadway\Xsc\49-0282_rdy_xpl_1.dgn
roquec

10/26/98

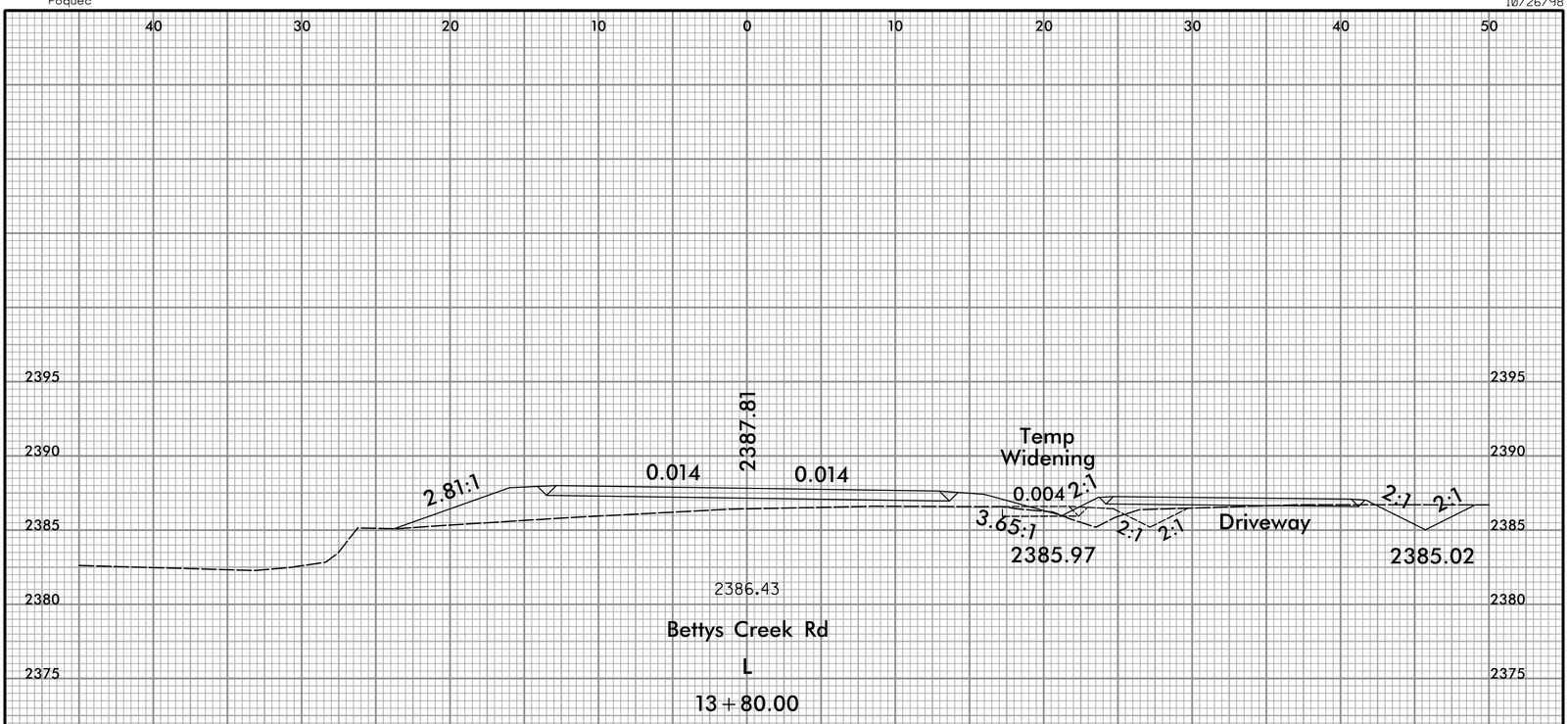

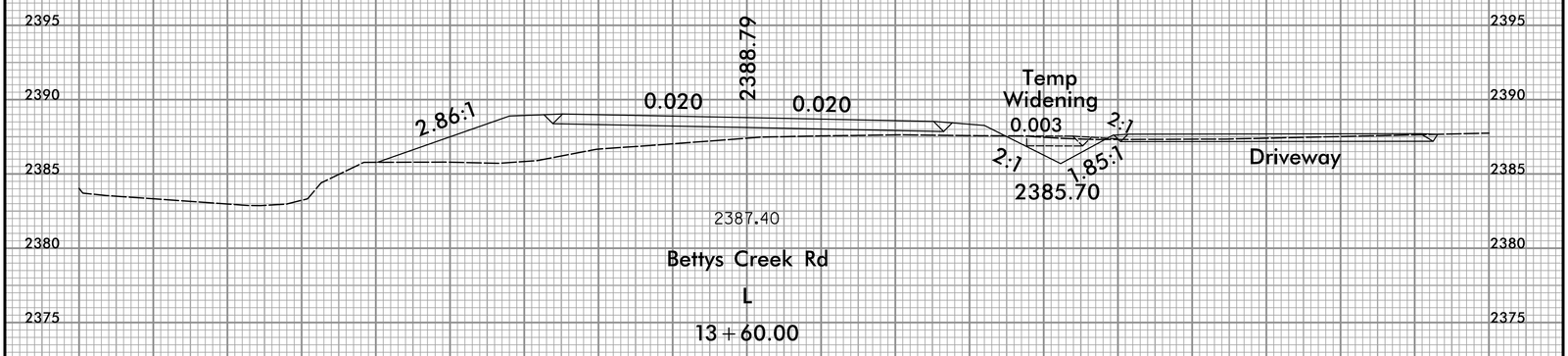

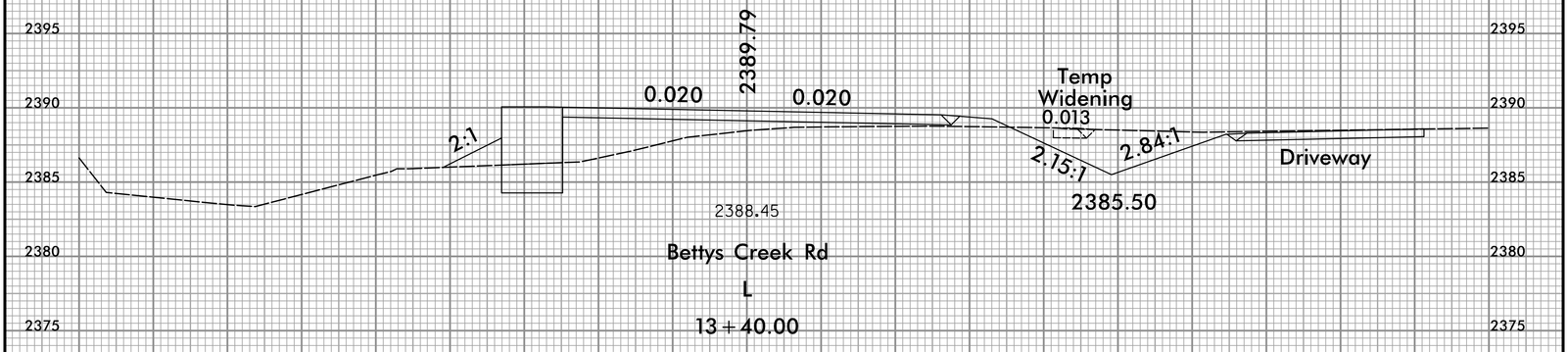

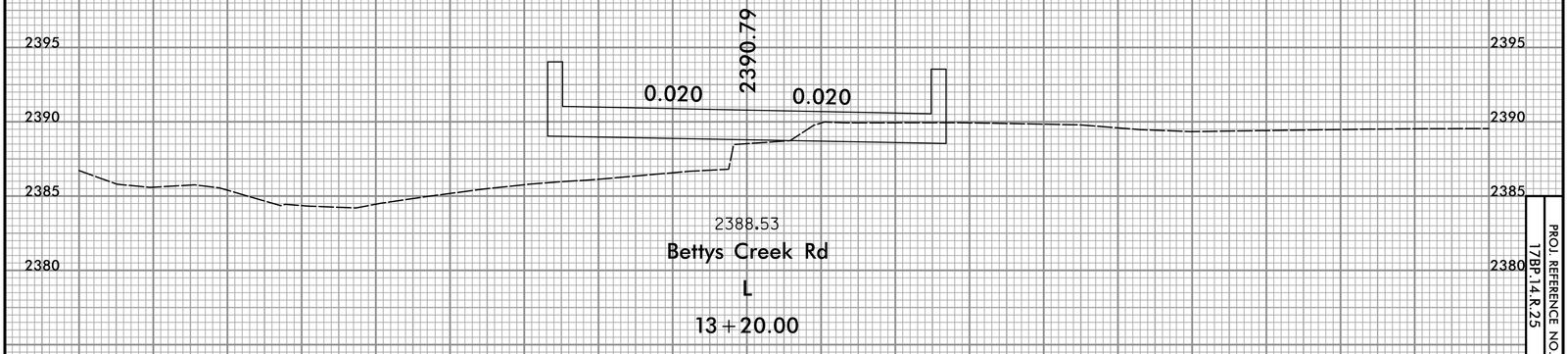

0 2.5 5

PROJ. REFERENCE NO.
17BP.14.R.25

SHEET NO.
X-5

1:31:36 PM
r:\roadway\Xsc\49-0282_rdy_xpl_1.dgn
roquec

10/26/98

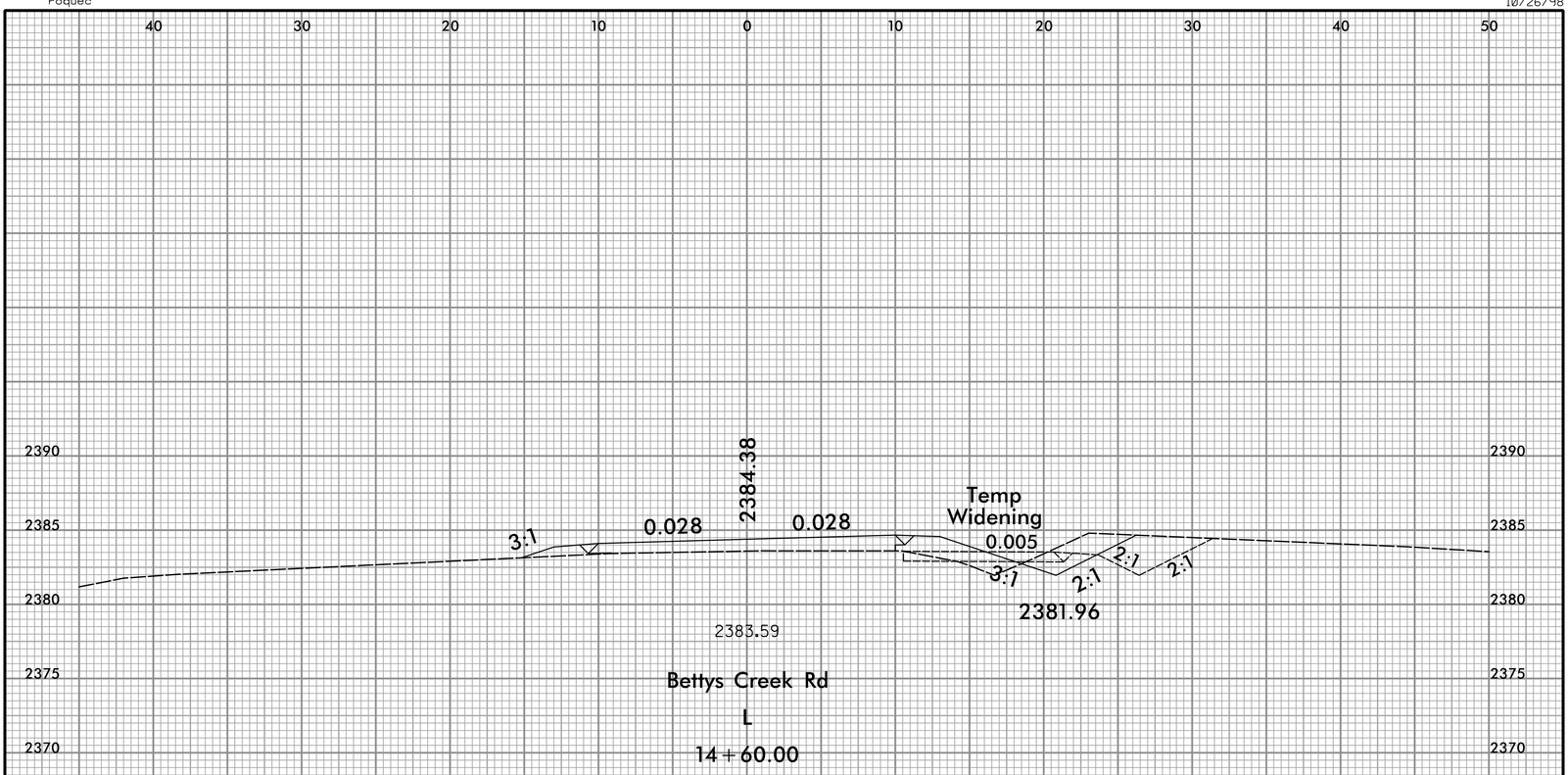

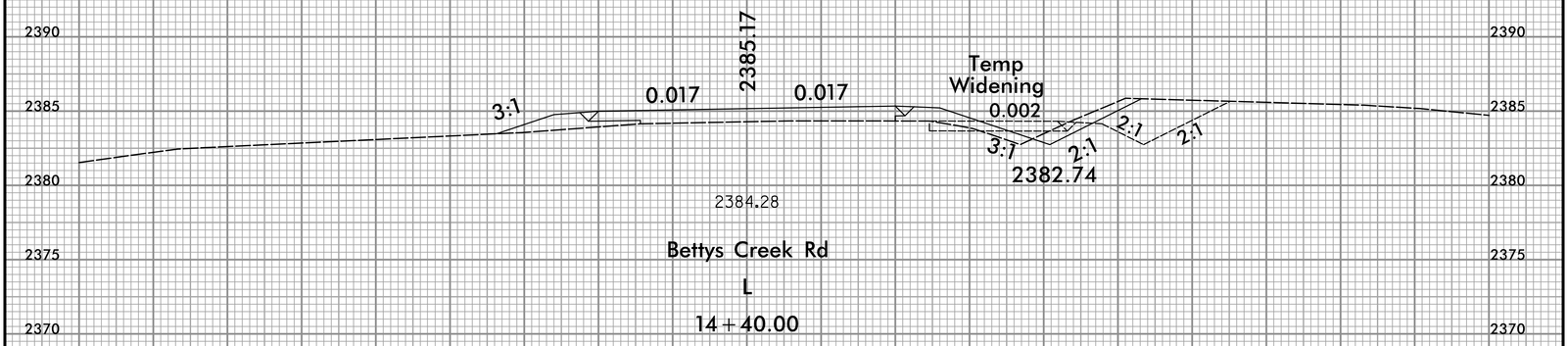

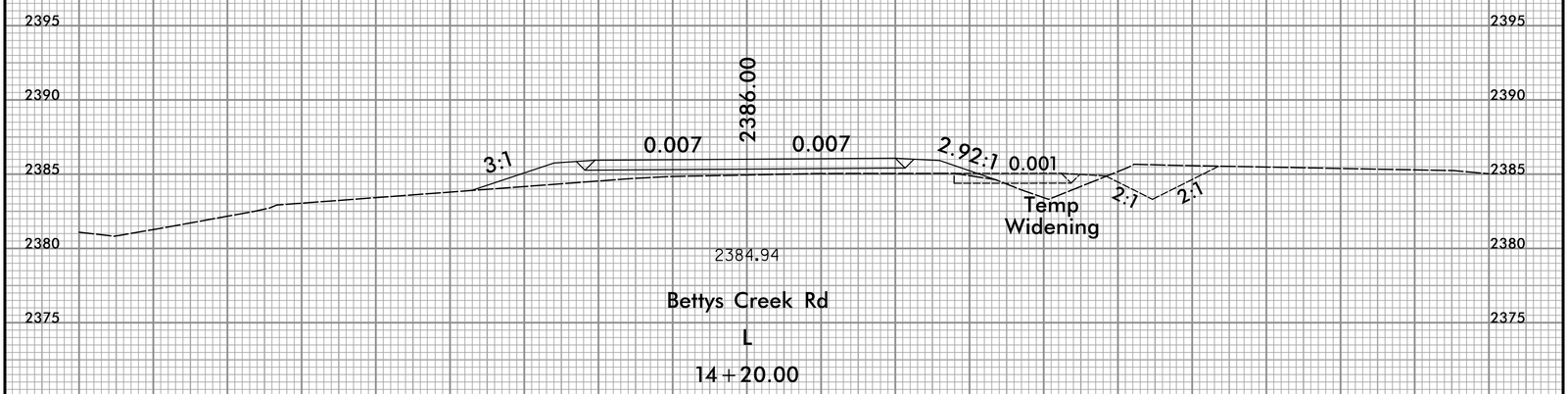

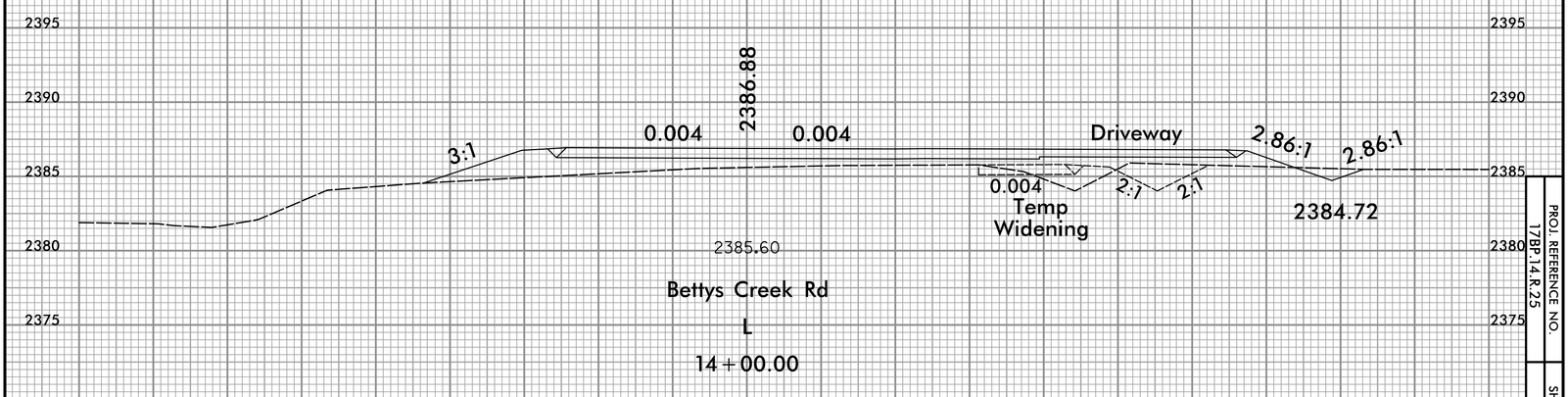

0 2.5 5

PROJ. REFERENCE NO.
17BP.14.R.25

SHEET NO.
X-6

1:31:37 PM
r:\roadway\Xsc\49-0282_rdy_xpl_1.dgn
roquec

10/26/98

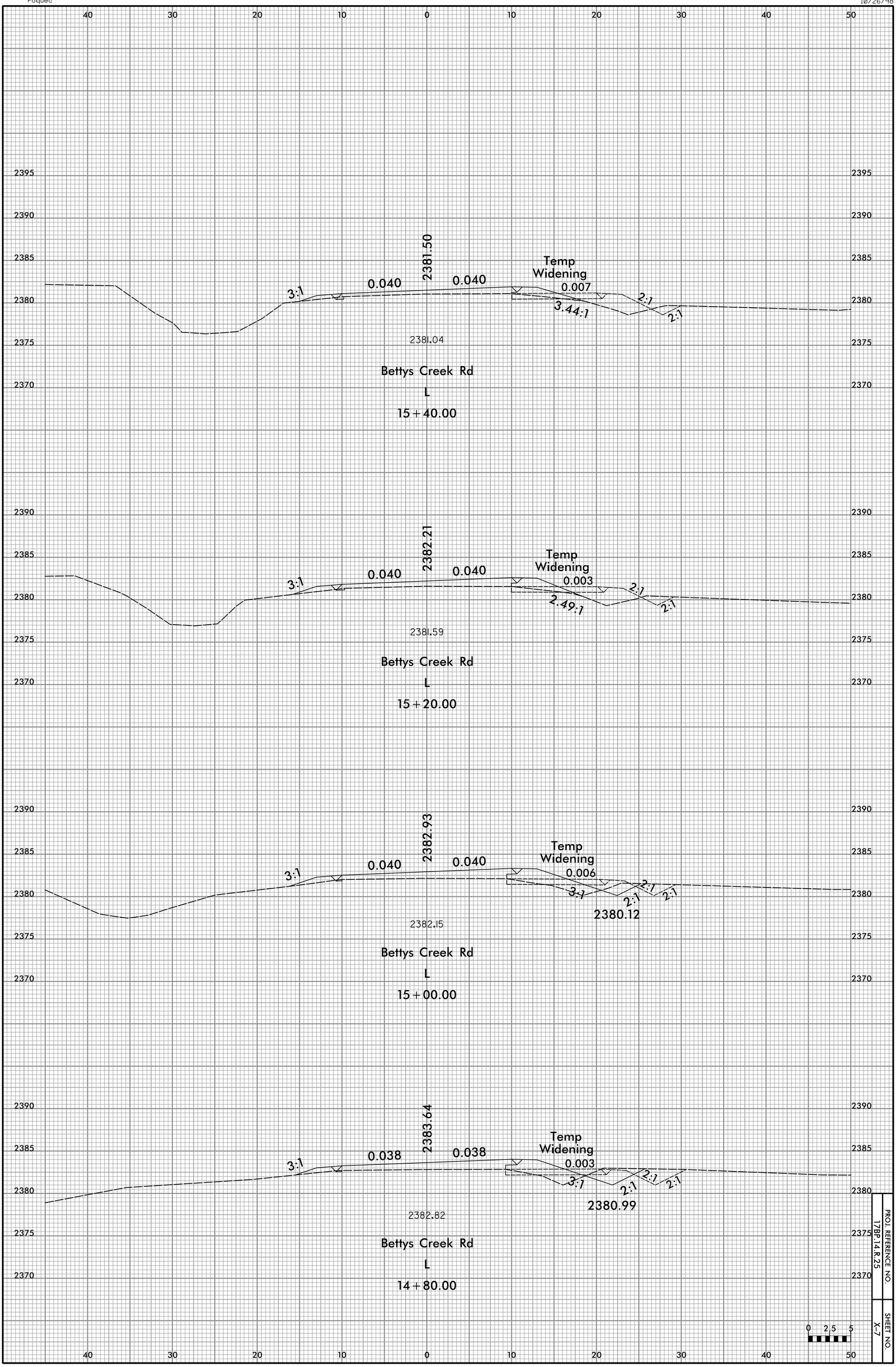

PROJ. REFERENCE NO.
17BP.14.R.25

SHEET NO.
X-7

1:31:37 PM
r:\roadway\Xsc\49-0282_rdy_xpl_1.dgn
roquec

10/26/98

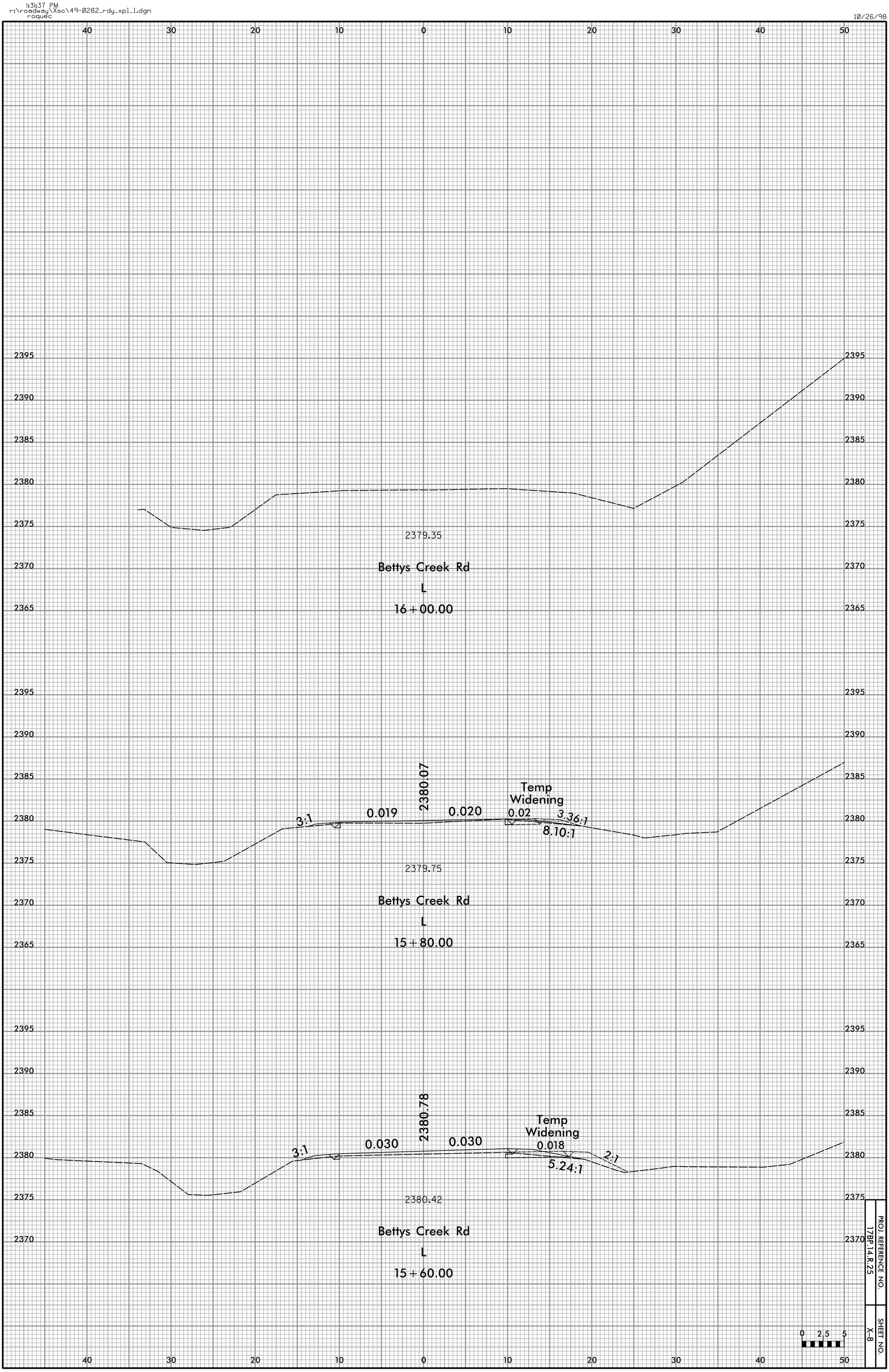

PROJ. REFERENCE NO.
17BP.14.R.25

SHEET NO.
X-8

TIP PROJECT: 17BP.14.R.25

CONTRACT:

STATE OF NORTH CAROLINA
DIVISION OF HIGHWAYS

STATE	STATE PROJECT REFERENCE NO.	SHEET NO.	TOTAL SHEETS
N.C.	17BP.14.R.25	TS-01	

STATE PROJ. NO.	F.A. PROJ. NO.	DESCRIPTION
17BP.14.R.25		PE, R/W, UTIL

JACKSON COUNTY

LOCATION: BRIDGE NO. 282 OVER BETTY'S CREEK ON SR 1307 (BETTY'S CREEK RD)

TYPE OF WORK: GRADING, DRAINAGE, PAVING AND STRUCTURE

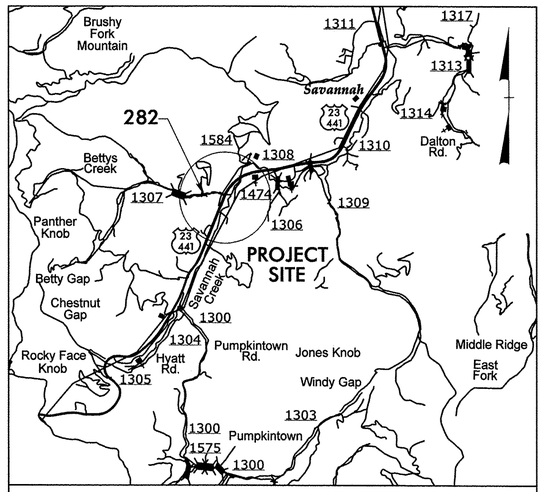

VICINITY MAP

STRUCTURE

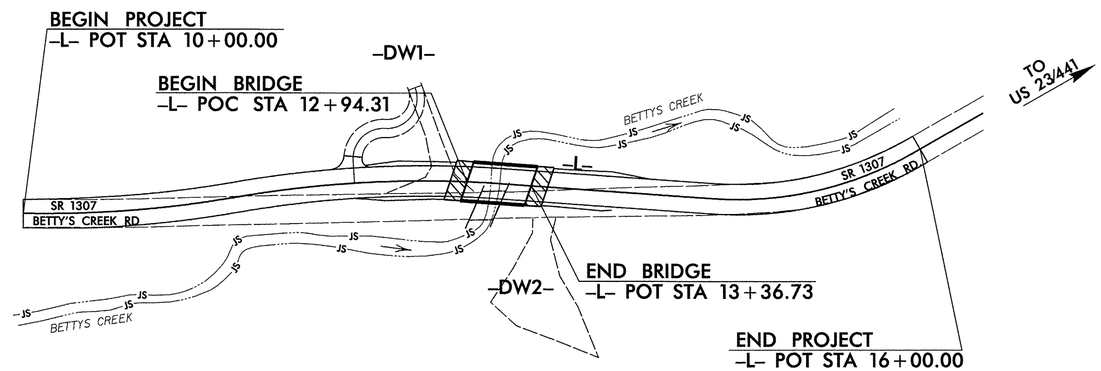

NAD 83/ NSRS 2007

CLEARING ON THIS PROJECT SHALL BE PERFORMED TO THE LIMITS ESTABLISHED BY METHOD III.
THIS PROJECT IS NOT WITHIN ANY MUNICIPAL BOUNDARIES.

DESIGN DATA

ADT XXXX = 240
V = 45 MPH
FUNC CLASS = LOCAL
SUB-REGIONAL TIER

PROJECT LENGTH

LENGTH ROADWAY STATE PROJECT 17BP.14.R.25 = 0.106 MILES
LENGTH STRUCTURES STATE PROJECT 17BP.14.R.25 = 0.008 MILES
TOTAL LENGTH STATE PROJECT 17BP.14.R.25 = 0.114 MILES

NCDOT CONTACT: JOSHUA DEYTON, PE
PROJECT ENGINEER

Prepared In the Office of:
AECOM
NC FIRM LICENSE No: F-0342
701 Corporate Center Drive, Suite 475
Raleigh, NC 27607
(919) 854-6200 - (919) 854-6259(FAX)

2012 STANDARD SPECIFICATIONS

RIGHT OF WAY DATE: JUNE 15, 2012

LETTING DATE: FY 2013

LEN HILL, PE
PROJECT ENGINEER

CLAUDETTE M.K. ROQUE, PE
PROJECT DESIGN ENGINEER

BRIDGE ENGINEER

NORTH CAROLINA PROFESSIONAL SEAL 030474 ENGINEER JOHN C. MORRISON
4/19/12

SIGNATURE: John C. Morrison P.E.

DIVISION OF HIGHWAYS
STATE OF NORTH CAROLINA

STATE OF NORTH CAROLINA DEPARTMENT OF TRANSPORTATION

P.E.
STATE HIGHWAY DESIGN ENGINEER

4:26:47 PM
G:\60238772\400_Tech_Info_Disc_Files\450_NCDOTStdTechDesFiles\BRG_282\Structures\B282_Str_Title
lowery d

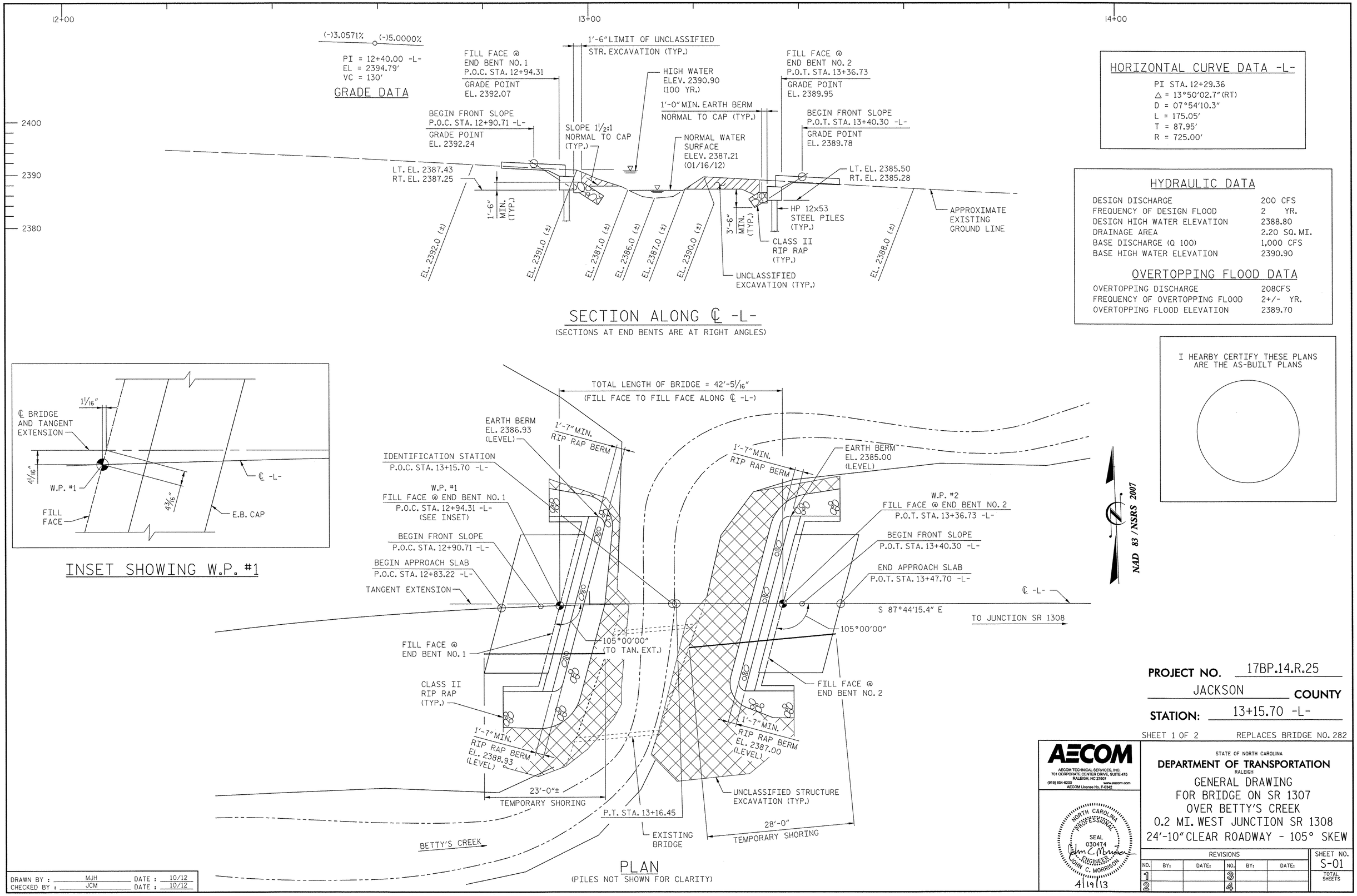
12+00
13+00
14+00
(-)3.0571%
(-)5.0000%
PI = 12+40.00 -L-
EL = 2394.79'
VC = 130'
GRADE DATA
FILL FACE @ END BENT NO. 1
P.O.C. STA. 12+94.31
GRADE POINT EL. 2392.07
1'-6" LIMIT OF UNCLASSIFIED STR. EXCAVATION (TYP.)
HIGH WATER ELEV. 2390.90 (100 YR.)
FILL FACE @ END BENT NO. 2
P.O.T. STA. 13+36.73
GRADE POINT EL. 2389.95
1'-0" MIN. EARTH BERM NORMAL TO CAP (TYP.)
BEGIN FRONT SLOPE P.O.C. STA. 12+90.71 -L-
GRADE POINT EL. 2392.24
SLOPE 1½:1 NORMAL TO CAP (TYP.)
NORMAL WATER SURFACE ELEV. 2387.21 (01/16/12)
BEGIN FRONT SLOPE P.O.T. STA. 13+40.30 -L-
GRADE POINT EL. 2389.78
2400
2390
2380
LT. EL. 2387.43
RT. EL. 2387.25
LT. EL. 2385.50
RT. EL. 2385.28
1'-6" MIN. (TYP.)
3'-6" MIN. (TYP.)
HP 12x53 STEEL PILES (TYP.)
CLASS II RIP RAP (TYP.)
APPROXIMATE EXISTING GROUND LINE
EL. 2392.0 (±)
EL. 2391.0 (±)
EL. 2387.0 (±)
EL. 2386.0 (±)
EL. 2387.0 (±)
EL. 2390.0 (±)
EL. 2388.0 (±)
UNCLASSIFIED EXCAVATION (TYP.)
SECTION ALONG ℄ -L-
(SECTIONS AT END BENTS ARE AT RIGHT ANGLES)
HORIZONTAL CURVE DATA -L-
PI STA. 12+29.36
△ = 13°50'02.7" (RT)
D = 07°54'10.3"
L = 175.05'
T = 87.95'
R = 725.00'
HYDRAULIC DATA
DESIGN DISCHARGE 200 CFS
FREQUENCY OF DESIGN FLOOD 2 YR.
DESIGN HIGH WATER ELEVATION 2388.80
DRAINAGE AREA 2.20 SQ. MI.
BASE DISCHARGE (Q 100) 1,000 CFS
BASE HIGH WATER ELEVATION 2390.90
OVERTOPPING FLOOD DATA
OVERTOPPING DISCHARGE 208CFS
FREQUENCY OF OVERTOPPING FLOOD 2+/- YR.
OVERTOPPING FLOOD ELEVATION 2389.70
I HEARBY CERTIFY THESE PLANS ARE THE AS-BUILT PLANS
1/16"
℄ BRIDGE AND TANGENT EXTENSION
4/16"
W.P. #1
4 3/16"
℄ -L-
FILL FACE
E.B. CAP
INSET SHOWING W.P. #1
TOTAL LENGTH OF BRIDGE = 42'-5 5/16"
(FILL FACE TO FILL FACE ALONG ℄ -L-)
EARTH BERM EL. 2386.93 (LEVEL)
1'-7" MIN. RIP RAP BERM
IDENTIFICATION STATION P.O.C. STA. 13+15.70 -L-
W.P. #1 FILL FACE @ END BENT NO. 1 P.O.C. STA. 12+94.31 -L- (SEE INSET)
BEGIN FRONT SLOPE P.O.C. STA. 12+90.71 -L-
BEGIN APPROACH SLAB P.O.C. STA. 12+83.22 -L-
TANGENT EXTENSION
EARTH BERM EL. 2385.00 (LEVEL)
W.P. #2 FILL FACE @ END BENT NO. 2 P.O.T. STA. 13+36.73 -L-
BEGIN FRONT SLOPE P.O.T. STA. 13+40.30 -L-
END APPROACH SLAB P.O.T. STA. 13+47.70 -L-
NAD 83 / NSRS 2007
℄ -L-
S 87°44'15.4" E
TO JUNCTION SR 1308
105°00'00"
105°00'00" (TO TAN. EXT.)
FILL FACE @ END BENT NO. 1
FILL FACE @ END BENT NO. 2
CLASS II RIP RAP (TYP.)
1'-7" MIN. RIP RAP BERM EL. 2388.93 (LEVEL)
1'-7" MIN. RIP RAP BERM EL. 2387.00 (LEVEL)
23'-0"±
TEMPORARY SHORING
P.T. STA. 13+16.45
UNCLASSIFIED STRUCTURE EXCAVATION (TYP.)
28'-0"
TEMPORARY SHORING
EXISTING BRIDGE
BETTY'S CREEK
PLAN
(PILES NOT SHOWN FOR CLARITY)
PROJECT NO. 17BP.14.R.25
JACKSON COUNTY
STATION: 13+15.70 -L-
SHEET 1 OF 2
REPLACES BRIDGE NO. 282
AECOM
AECOM TECHNICAL SERVICES, INC.
701 CORPORATE CENTER DRIVE, SUITE 475
RALEIGH, NC 27607
(919) 854-6200
www.aecom.com
AECOM License No. F-0342
NORTH CAROLINA PROFESSIONAL SEAL 030474 ENGINEER JOHN C. MORRICON
4/19/13
STATE OF NORTH CAROLINA
DEPARTMENT OF TRANSPORTATION
RALEIGH
GENERAL DRAWING
FOR BRIDGE ON SR 1307
OVER BETTY'S CREEK
0.2 MI. WEST JUNCTION SR 1308
24'-10" CLEAR ROADWAY - 105° SKEW
REVISIONS
NO. BY: DATE: NO. BY: DATE:
1 3
2 4
SHEET NO. S-01
TOTAL SHEETS
DRAWN BY : MJH DATE : 10/12
CHECKED BY : JCM DATE : 10/12
DATE: 4/16/2013
TIME: 4:06:45 PM
USER: laverryd
DGN: G:\82382377\400_Tech_Info_Disc_Files\450_NCDOT\Staff\tech\Dsd\Files\BRG_282\Structures\82382_PlanView.dgn

BENCH MARK: BM#1 - 8"SPIKE SET IN BASE OF 18"PINE TREE,
23.3217' LEFT OF -L- STA. 11+50.28
(31' LEFT OF -BL- STA. 6+48 NEAREST FT.)
ELEV. 2399.05, NAVD 1988

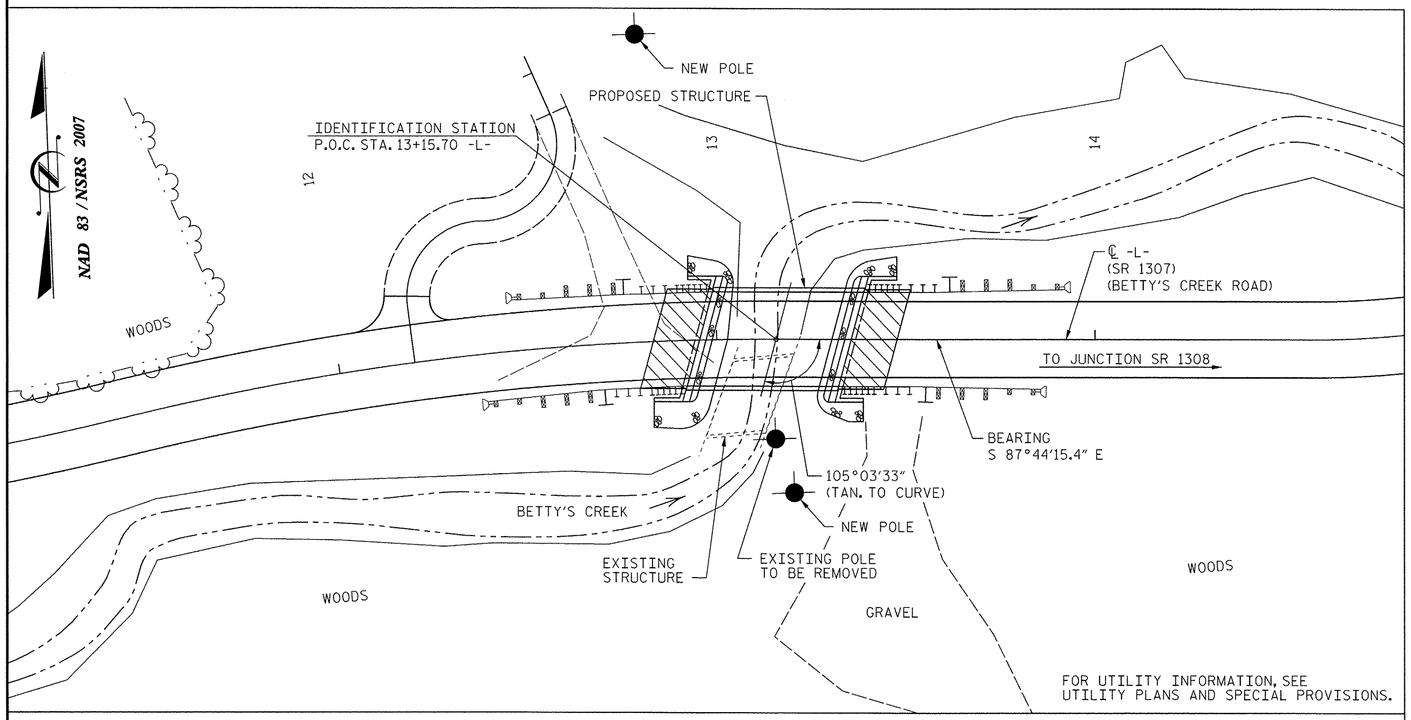

LOCATION SKETCH

NOTES:

ASSUMED LIVE LOAD = HL-93 OR ALTERNATE LOADING.

FOR EROSION CONTROL MEASURES, SEE EROSION CONTROL PLANS.

THIS BRIDGE HAS BEEN DESIGNED IN ACCORDANCE WITH THE AASHTO LRFD BRIDGE DESIGN SPECIFICATIONS FOR SEISMIC PERFORMANCE ZONE 1.

AFTER SERVING AS TEMPORARY STRUCTURE, THE EXISTING STRUCTURE CONSISTING OF 1 @ 16'-6" SPAN, 19'± CLEAR ROADWAY WIDTH, TIMBER FLOOR ON TIMBER JOIST, ON TIMBER CAPS W/ TIMBER POSTS AND SILLS AND LOCATED AT EXISTING CROSSING FOR PROPOSED STRUCTURE, SHALL BE REMOVED. THE EXISTING BRIDGE IS PRESENTLY POSTED BELOW THE LEGAL LOAD LIMIT. SHOULD THE STRUCTURAL INTEGRITY OF THE BRIDGE FURTHER DETERIORATE, THIS LOAD LIMITATION MAY BE REDUCED AS FOUND NECESSARY DURING THE LIFE OF THE PROJECT.

REMOVAL OF THE EXISTING BRIDGE SHALL BE PERFORMED AS NOT TO ALLOW DEBRIS TO FALL INTO THE WATER. THE CONTRACTOR SHALL REMOVE THE BRIDGE AND SUBMIT PLANS FOR DEMOLITION IN ACCORDANCE WITH ARTICLE 401-2 OF THE STANDARD SPECIFICATIONS.

THE MATERIAL SHOWN IN THE CROSS-HATCHED AREA SHALL BE EXCAVATED FOR A DISTANCE OF 29 FT± EACH SIDE OF CENTERLINE ROADWAY AS DIRECTED BY THE ENGINEER. THIS WORK WILL BE PAID FOR AT THE CONTRACT LUMP SUM PRICE FOR UNCLASSIFIED STRUCTURE EXCAVATION. SEE SECTION 412 OF THE STANDARD SPECIFICATIONS.

THE SUBSTRUCTURE OF THE EXISTING BRIDGE INDICATED ON THE PLANS IS FROM THE BEST INFORMATION AVAILABLE. SINCE THIS INFORMATION IS SHOWN FOR THE CONVENIENCE OF THE CONTRACTOR, THE CONTRACTOR SHALL HAVE NO CLAIM WHATSOEVER AGAINST THE DEPARTMENT OF TRANSPORTATION FOR ANY DELAYS OR ADDITIONAL COSTS INCURRED BASED ON DIFFERENCES BETWEEN THE EXISTING BRIDGE SUBSTRUCTURE SHOWN ON THE PLANS AND THE ACTUAL CONDITIONS AT THE PROJECT SITE.

STEEL SHEET PILING REQUIRED FOR SHORING SHALL BE HOT ROLLED.

FOR LIMITS OF TEMPORARY SHORING FOR MAINTENANCE OF TRAFFIC, SEE TRAFFIC CONTROL PLANS. FOR PAY ITEM FOR TEMPORARY SHORING FOR MAINTENANCE OF TRAFFIC, SEE ROADWAY PLANS.

FOR PILES, SEE SECTION 450 OF THE STANDARD SPECIFICATIONS.

PILES AT END BENT NO. 1 AND END BENT NO. 2 ARE DESIGNED FOR A FACTORED RESISTANCE OF 85 TONS PER PILE.

DRIVE PILES AT END BENT NO. 1 AND END BENT NO. 2 TO A REQUIRED DRIVING RESISTANCE OF 145 TONS PER PILE.

STEEL H-PILE POINTS ARE REQUIRED FOR ALL STEEL H-PILES AT END BENT NO. 1 AND END BENT NO. 2. FOR STEEL PILE POINTS, SEE SECTION 450 OF THE STANDARD SPECIFICATIONS.

TESTING PILES WITH THE PDA DURING DRIVING, RESTRIKING OR REDRIVING MAY BE REQUIRED. THE ENGINEER WILL DETERMINE THE NEED FOR PDA TESTING. FOR PDA TESTING, SEE SECTION 450 OF THE STANDARD SPECIFICATIONS.

FOR PILE DRIVING CRITERIA, SEE SPECIAL PROVISIONS.

ASPHALT WEARING SURFACE IS INCLUDED IN ROADWAY QUANTITY ON ROADWAY PLANS.

THIS STRUCTURE HAS BEEN DESIGNED IN ACCORDANCE WITH HEC 18, "EVALUATING SCOUR AT BRIDGE", MAY, 2001.

FOR SUBMITTAL OF WORKING DRAWINGS, SEE SPECIAL PROVISIONS.

FOR FALSEWORK AND FORMWORK, SEE SPECIAL PROVISIONS.

FOR CRANE SAFETY, SEE SPECIAL PROVISIONS.

FOR OTHER DESIGN DATA AND GENERAL NOTES, SEE SHEET SN.

TOTAL BILL OF MATERIAL

	REMOVAL OF EXISTING STRUCTURE	PDA TESTING	UNCLASSIFIED STRUCTURE EXCAVATION	CLASS A CONCRETE	BRIDGE APPROACH SLABS	REINFORCING STEEL	3'-0" x 1'-9" PRESTRESSED CONCRETE CORED SLAB UNITS		VERTICAL CONCRETE BARRIER RAIL	HP 12x53 STEEL PILES		STEEL PILE POINTS	RIP RAP CLASS II (2'-0" THICK)	GEOTEXTILE FOR DRAINAGE	ELASTOMERIC BEARINGS
	LUMP SUM	EACH	LUMP SUM	CU. YDS.	LUMP SUM	LBS.	NO.	LIN. FT.	LIN. FT.	NO.	LIN. FT.	EACH	TONS	SQ. YD.	LUMP SUM
SUPERSTRUCTURE	LUMP SUM		—	—	LUMP SUM	—	9	360	80.25	—	—	—	—	—	LUMP SUM
END BENT No. 1	—		LUMP SUM	12.7	—	1898	—	—	—	5	215	5	35	39	—
END BENT No. 2	—		LUMP SUM	12.7	—	1898	—	—	—	5	185	5	22	24	—
TOTAL	LUMP SUM	1	LUMP SUM	25.4	LUMP SUM	3796	9	360	80.25	10	400	10	57	63	LUMP SUM

PROJECT NO. 17BP.14.R.25

JACKSON COUNTY

STATION: 13+15.70 -L-

SHEET 2 OF 2 REPLACES BRIDGE NO. 282

AECOM
AECOM TECHNICAL SERVICES, INC.
701 CORPORATE CENTER DRIVE, SUITE 475
RALEIGH, NC 27607
(919) 854-6200 www.aecom.com
AECOM License No. F-0342

NORTH CAROLINA PROFESSIONAL SEAL 030474 ENGINEER JOHN C. MORRISON
4/19/13

STATE OF NORTH CAROLINA
DEPARTMENT OF TRANSPORTATION
RALEIGH

GENERAL DRAWING
FOR BRIDGE ON SR 1307
OVER BETTY'S CREEK
0.2 MI. WEST JUNCTION SR 1308
24'-10" CLEAR ROADWAY - 105° SKEW

REVISIONS						SHEET NO.
NO.	BY:	DATE:	NO.	BY:	DATE:	S-02
						TOTAL SHEETS

DRAWN BY : MJH DATE : 10/12
CHECKED BY : JCM DATE : 10/12

DATE: 4/23/2013
TIME: 10:35 AM

USER: twesty
DGN: d:\900258772\400_Tech_Info_Disc_Files\450_NC007StdTechBdrFiles\BRC_282\Structure\B282_LocSketch.dgn

LOAD AND RESISTANCE FACTOR RATING (LRFD) SUMMARY FOR PRESTRESSED CONCRETE GIRDERS

LEVEL		VEHICLE	WEIGHT (W) (TONS)	CONTROLLING LOAD RATING	MINIMUM RATING FACTORS (RF)	TONS = W X RF	STRENGTH I LIMIT STATE											SERVICE III LIMIT STATE						COMMENT NUMBER
								MOMENT					SHEAR						MOMENT					
							LIVELOAD FACTORS	DISTRIBUTION FACTORS (DF)	RATING FACTOR	SPAN	GIRDER LOCATION	DISTANCE FROM LEFT END OF SPAN (ft)	DISTRIBUTION FACTORS (DF)	RATING FACTOR	SPAN	GIRDER LOCATION	DISTANCE FROM LEFT END OF SPAN (ft)	LIVELOAD FACTORS	DISTRIBUTION FACTORS (DF)	RATING FACTOR	SPAN	GIRDER LOCATION	DISTANCE FROM LEFT END OF SPAN (ft)	
DESIGN LOAD RATING		HL-93(Inv)	N/A	1	1.573	--	1.75	0.274	1.78	40'	EL	19.482	0.62	1.6	40'	EL	1.948	0.80	0.274	**1.57**	40'	EL	**19.482**	
		HL-93(Opr)	N/A	--	2.078	--	1.35	0.274	2.31	40'	EL	19.482	0.62	2.08	40'	EL	1.948	N/A	--	--	--	--	--	
		HS-20(Inv)	36.000	2	1.873	67.422	1.75	0.274	2.23	40'	EL	19.482	0.62	**1.87**	40'	EL	**1.948**	0.80	0.274	1.96	40'	EL	19.482	
		HS-20(Opr)	36.000	--	2.428	87.4	1.35	0.274	2.9	40'	EL	19.482	0.62	2.43	40'	EL	1.948	N/A	--	--	--	--	--	
LEGAL LOAD RATING	SV	SNSH	13.500	--	3.642	49.163	1.4	0.274	5.16	40'	EL	19.482	0.62	4.8	40'	EL	7.793	0.80	0.274	3.64	40'	EL	19.482	
		SNGARBS2	20.000	--	2.995	59.897	1.4	0.274	4.24	40'	EL	15.586	0.62	3.65	40'	EL	7.793	0.80	0.274	2.99	40'	EL	19.482	
		SNAGRIS2	22.000	--	2.951	64.924	1.4	0.274	4.14	40'	EL	15.586	0.62	3.49	40'	EL	7.793	0.80	0.274	2.95	40'	EL	15.586	
		SNCOTTS3	27.250	--	1.82	49.605	1.4	0.274	2.58	40'	EL	19.482	0.62	2.42	40'	EL	7.793	0.80	0.274	1.82	40'	EL	19.482	
		SNAGGRS4	34.925	--	1.639	57.231	1.4	0.274	2.32	40'	EL	19.482	0.62	2.18	40'	EL	7.793	0.80	0.274	1.64	40'	EL	19.482	
		SNS5A	35.550	--	1.594	56.664	1.4	0.274	2.26	40'	EL	19.482	0.62	2.3	40'	EL	7.793	0.80	0.274	1.59	40'	EL	19.482	
		SNS6A	39.950	--	1.517	60.592	1.4	0.274	2.15	40'	EL	19.482	0.62	2.16	40'	EL	1.948	0.80	0.274	1.52	40'	EL	19.482	
		SNS7B	42.000	3	1.446	60.751	1.4	0.274	2.05	40'	EL	19.482	0.62	2.2	40'	EL	1.948	0.80	0.274	**1.45**	40'	EL	**19.482**	
	TTST	TNAGRIT3	33.000	--	1.866	61.588	1.4	0.274	2.65	40'	EL	19.482	0.62	2.52	40'	EL	1.948	0.80	0.274	1.87	40'	EL	19.482	
		TNT4A	33.075	--	1.89	62.524	1.4	0.274	2.68	40'	EL	19.482	0.62	2.38	40'	EL	7.793	0.80	0.274	1.89	40'	EL	19.482	
		TNT6A	41.600	--	1.603	66.702	1.4	0.274	2.27	40'	EL	19.482	0.62	2.34	40'	EL	7.793	0.80	0.274	1.60	40'	EL	19.482	
		TNT7A	42.000	--	1.644	69.051	1.4	0.274	2.33	40'	EL	19.482	0.62	2.17	40'	EL	1.948	0.80	0.274	1.64	40'	EL	19.482	
		TNT7B	42.000	--	1.681	70.584	1.4	0.274	2.38	40'	EL	19.482	0.62	2.09	40'	EL	1.948	0.80	0.274	1.68	40'	EL	19.482	
		TNAGRIT4	43.000	--	1.635	70.321	1.4	0.274	2.31	40'	EL	15.586	0.62	2	40'	EL	1.948	0.80	0.274	1.64	40'	EL	19.482	
		TNAGT5A	45.000	--	1.513	68.098	1.4	0.274	2.14	40'	EL	19.482	0.62	2.08	40'	EL	1.948	0.80	0.274	1.51	40'	EL	19.482	
		TNAGT5B	45.000	--	1.47	66.159	1.4	0.274	2.08	40'	EL	19.482	0.62	1.9	40'	EL	1.948	0.80	0.274	1.47	40'	EL	19.482	

LOAD FACTORS:

DESIGN LOAD RATING FACTORS	LIMIT STATE	γ_{DC}	γ_{DW}
	STRENGTH I	1.25	1.50
	SERVICE III	1.00	1.00

NOTES:

MINIMUM RATING FACTORS ARE BASED ON THE STRENGTH I AND SERVICE III LIMIT STATES.

ALLOWABLE STRESSES FOR SERVICE III LIMIT STATE ARE AS REQUIRED FOR DESIGN.

(#) CONTROLLING LOAD RATING

(1) DESIGN LOAD RATING (HL-93)

(2) DESIGN LOAD RATING (HS-20)

(3) LEGAL LOAD RATING **

** SEE CHART FOR VEHICLE TYPE

GIRDER LOCATION

I - INTERIOR GIRDER
EL - EXTERIOR LEFT GIRDER
ER - EXTERIOR RIGHT GIRDER

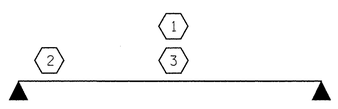

LRFR SUMMARY

FOR SPAN 'A'

PROJECT NO. 17BP.14.R.25

JACKSON COUNTY

STATION: 13+15.70 -L-

AECOM

AECOM TECHNICAL SERVICES, INC.
701 CORPORATE CENTER DRIVE, SUITE 475
RALEIGH, NC 27607
(919) 854-6200 www.aecom.com
AECOM License No. F-0342

NORTH CAROLINA PROFESSIONAL SEAL 030474 ENGINEER JOHN C. MORRISON

4/19/13

STATE OF NORTH CAROLINA
DEPARTMENT OF TRANSPORTATION
RALEIGH

STANDARD
LRFR SUMMARY FOR
40' CORED SLAB UNIT
75° SKEW & 105° SKEW
(NON-INTERSTATE TRAFFIC)

REVISIONS						SHEET NO.
NO.	BY:	DATE:	NO.	BY:	DATE:	S-03
1			3			TOTAL SHEETS
2			4			

STD. NO. 21LRFR1_75&105S_40L

ASSEMBLED BY :	MJH	DATE :	10/12
CHECKED BY :	JCM	DATE :	10/12
DRAWN BY : CVC	6/10		
CHECKED BY : DNS	6/10		

DATE: 4/16/2013
TIME: 4:35:36 PM

USER: tawarya
DGN: D:\60123877.2\v400_Tech_Info_Disc_Files\450_NCDOT Std Test Des Files\BRG_292\Structure\B292_frt_Dtls_ssp.dgn

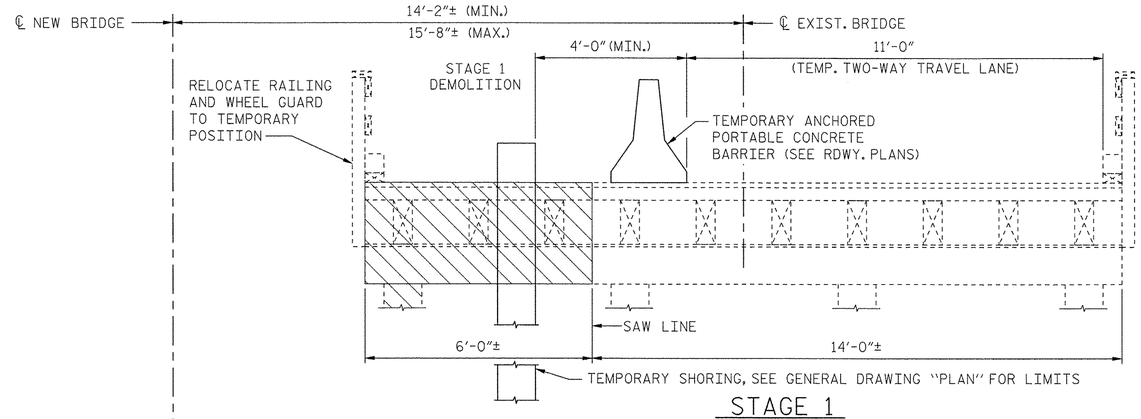

STAGE 1

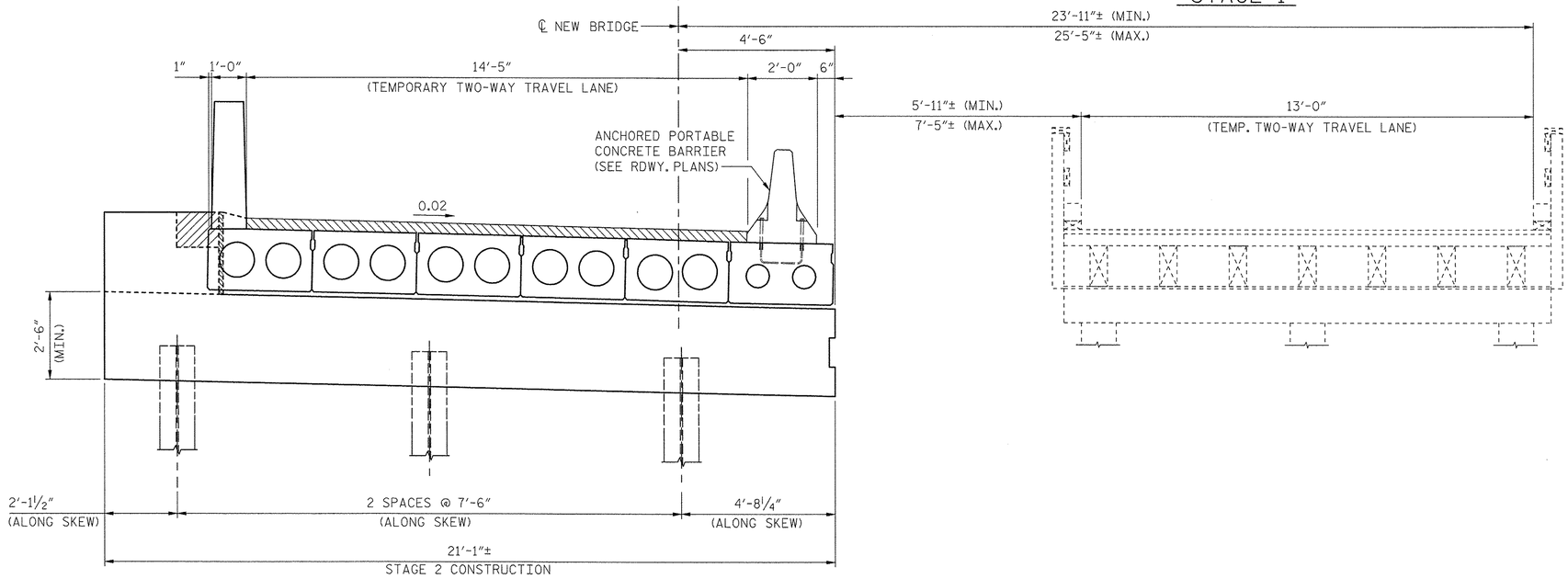

STAGE 2

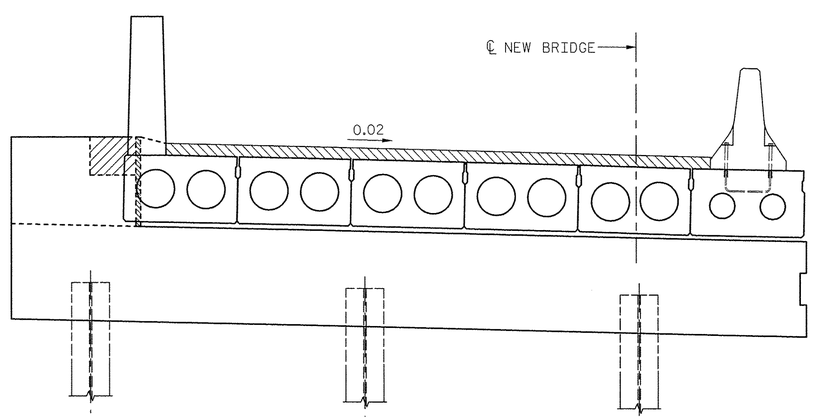

STAGE 3

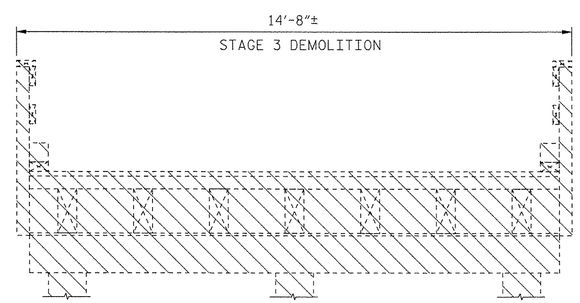

NOTES:

FOR STAGE 1, USE SHORT-TERM 11'-0" TEMPORARY LANE OR SHORT/OVERNIGHT CLOSURE TO CUT AND REMOVE DECK AND RELOCATE EXISTING RAILING.

IF EXISTING PILE OR POST PLACEMENT CONFLICTS WITH SAW LINE, REMOVE DECK, BEAMS AND BEARING STRIP, BUT LEAVE POST AND CAPS IN PLACE UNTIL STAGE 3.

DIMENSIONS ARE NORMAL TO ℄ BRIDGE UNLESS OTHERWISE NOTED.

PROJECT NO. 17BP.14.R.25

JACKSON **COUNTY**

STATION: 13+15.70 -L-

SHEET 1 OF 2

AECOM
AECOM TECHNICAL SERVICES, INC.
701 CORPORATE CENTER DRIVE, SUITE 475
RALEIGH, NC 27607
(919) 854-6200 www.aecom.com
AECOM License No. F-0342

NORTH CAROLINA PROFESSIONAL SEAL 030474 ENGINEER JOHN C. MORRIGON
4/19/13

STATE OF NORTH CAROLINA
DEPARTMENT OF TRANSPORTATION
RALEIGH

BRIDGE CONSTRUCTION STAGING FOR MAINTENANCE OF TRAFFIC

REVISIONS						SHEET NO.
NO.	BY:	DATE:	NO.	BY:	DATE:	S-04
						TOTAL SHEETS

DRAWN BY : MJH DATE : 10/12
CHECKED BY : JCM DATE : 10/12

DATE: 4/16/2013
TIME: 4:44:42 PM

USER: lweyrd
DGN: 0:\60239177.v00_Tech_Info_Disc_Files\450_WC\OTS\dTechBestFiles\DR6_2262\Structures\B262_PhaseSeq1.dgn

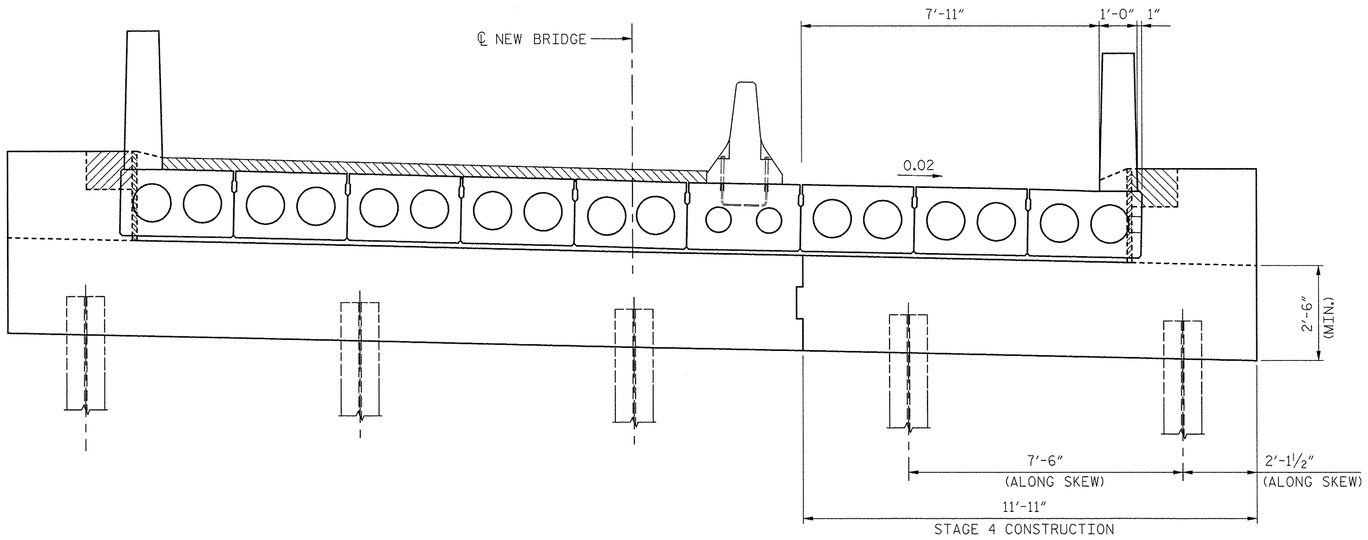

STAGE 4

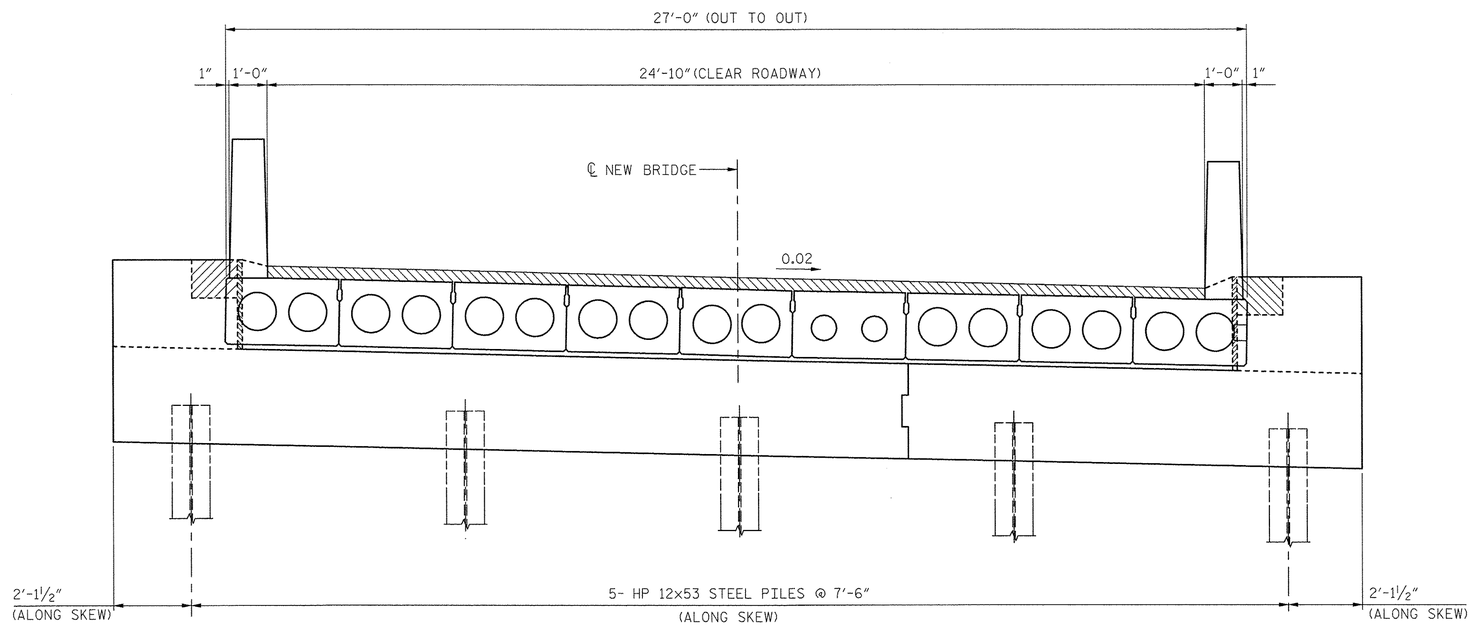

STAGE 5

PROJECT NO. 17BP.14.R.25

JACKSON **COUNTY**

STATION: 13+15.70 -L-

SHEET 2 OF 2

AECOM

AECOM TECHNICAL SERVICES, INC.
701 CORPORATE CENTER DRIVE, SUITE 475
RALEIGH, NC 27607
(919) 854-6200 www.aecom.com
AECOM License No. F-0342

NORTH CAROLINA PROFESSIONAL SEAL 030474 ENGINEER JOHN C. MORRISON

4/19/13

STATE OF NORTH CAROLINA
DEPARTMENT OF TRANSPORTATION
RALEIGH

BRIDGE CONSTRUCTION
STAGING FOR MAINTENANCE
OF TRAFFIC

REVISIONS						SHEET NO.
NO.	BY:	DATE:	NO.	BY:	DATE:	S-05
						TOTAL SHEETS

DRAWN BY : MJH DATE : 10/12
CHECKED BY : JCM DATE : 10/12

DATE: 4/18/2013
TIME: 4:53:37 PM
USER: lawcyd
DGN: G:\B0253817\2-400_Tech_Info_Disc_Files\450_NCDOT Std Tech Docs Files\BRG_280_Structures\B280_PhaseSeq12.dgn

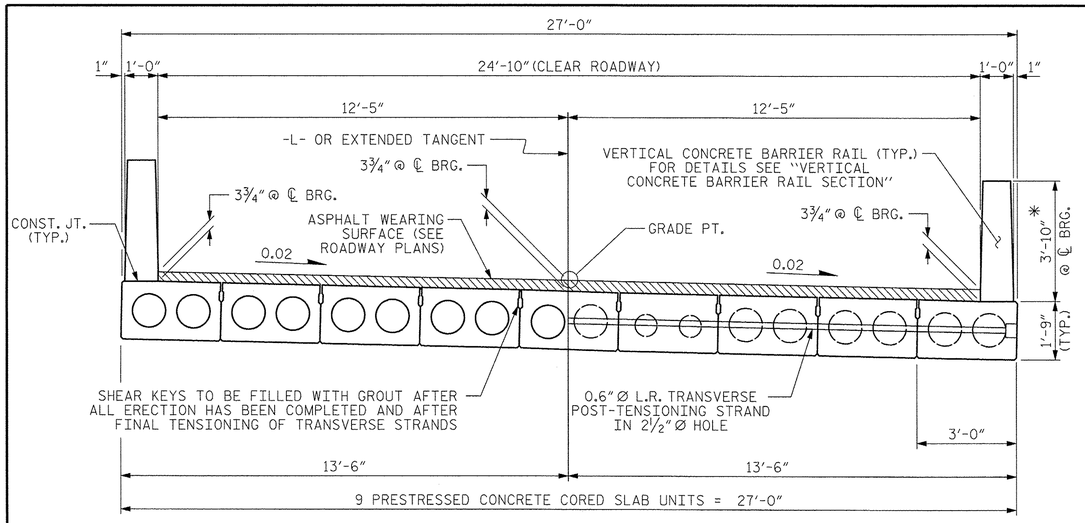

HALF SECTION
AT INTERMEDIATE DIAPHRAGMS

HALF SECTION
THROUGH VOIDS

TYPICAL SECTION

* - THE MAXIMUM BARRIER RAIL HEIGHT AND ASPHALT THICKNESS IS SHOWN. THE HEIGHT OF THE BARRIER RAIL AND ASPHALT THICKNESS VARIES WHILE THE TOP OF THE BARRIER RAIL FOLLOWS THE PROFILE OF THE GUTTERLINE. FOR RAIL HEIGHT DETAILS AND ASPHALT THICKNESS SEE THE "VERTICAL CONCRETE BARRIER RAIL SECTION" DETAIL.

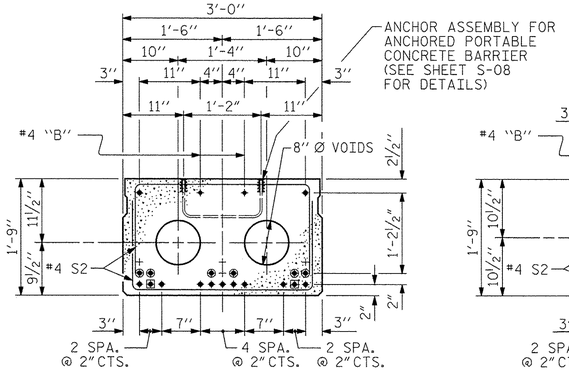

INTERIOR SLAB SECTION

(13 STRANDS REQUIRED)

(CORED SLAB UNIT #6 ONLY)

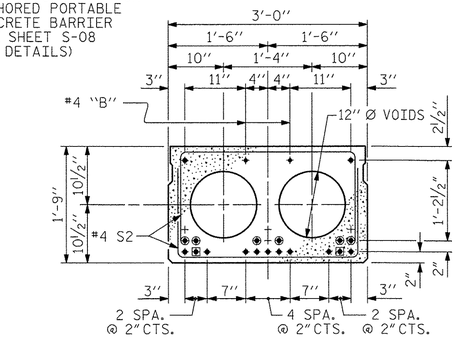

INTERIOR SLAB SECTION

(13 STRANDS REQUIRED)

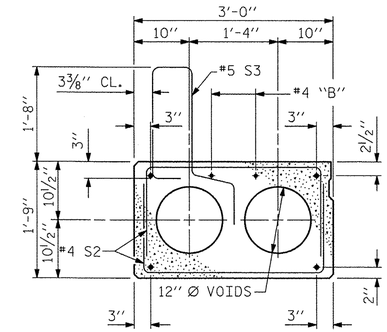

EXT. SLAB SECTION

(FOR PRESTRESSED STRAND LAYOUT, SEE INTERIOR SLAB SECTION.)

0.6" Ø LOW RELAXATION STRAND LAYOUT

◬ BOND SHALL BE BROKEN ON THESE STRANDS FOR A DISTANCE OF 6'-0" FROM END OF CORED SLAB UNIT. SEE STANDARD SPECIFICATIONS, ARTICLE 1078-7.

▣ BOND SHALL BE BROKEN ON THESE STRANDS FOR A DISTANCE OF 2'-0" FROM END OF CORED SLAB UNIT. SEE STANDARD SPECIFICATIONS, ARTICLE 1078-7.

◉ OPTIONAL FULL LENGTH DEBONDED STRANDS. THESE STRANDS ARE NOT REQUIRED. IF THE FABRICATOR CHOOSES TO INCLUDE THESE STRANDS IN THE CORED SLAB UNIT, THE STRANDS SHALL BE DEBONDED FOR THE FULL LENGTH OF THE UNIT AT NO ADDITIONAL COST. SEE STANDARD SPECIFICATIONS, ARTICLE 1078-7.

DEBONDING LEGEND

FIXED END

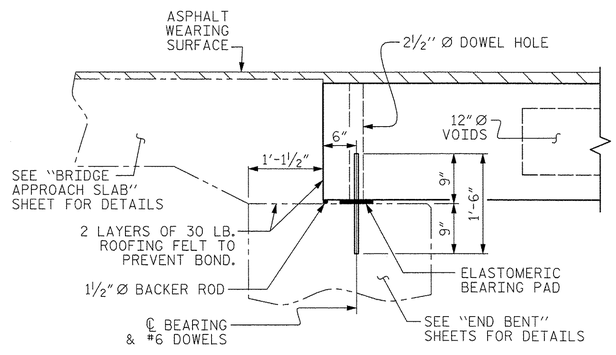

SECTION AT END BENT

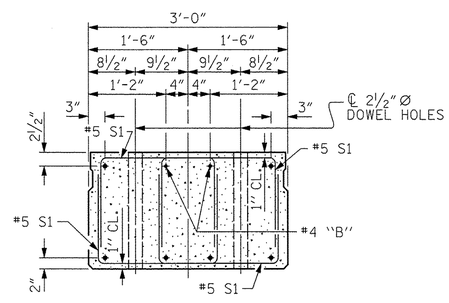

END ELEVATION

SHOWING PLACEMENT OF DOUBLE STIRRUPS AND LOCATION OF DOWEL HOLES. (STRAND LAYOUT NOT SHOWN.) INTERIOR SLAB UNIT SHOWN-EXTERIOR SLAB UNIT SIMILAR EXCEPT SHEAR KEY LOCATION.

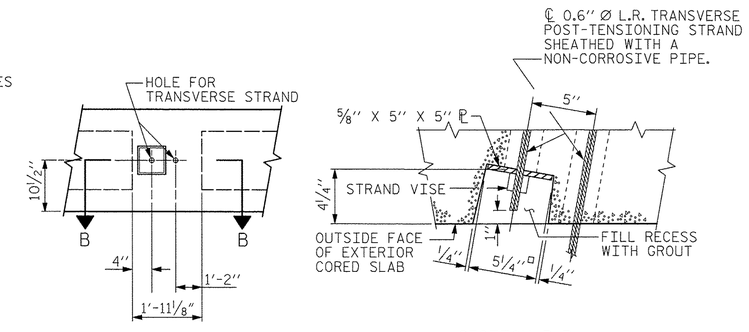

CORED SLAB UNIT #6

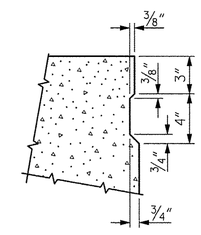

SHEAR KEY DETAIL

NOTE: OMIT SHEAR KEY ON OUTSIDE FACE OF EXTERIOR CORED SLABS.

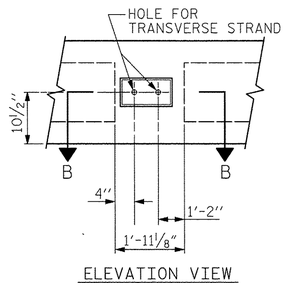

ELEVATION VIEW

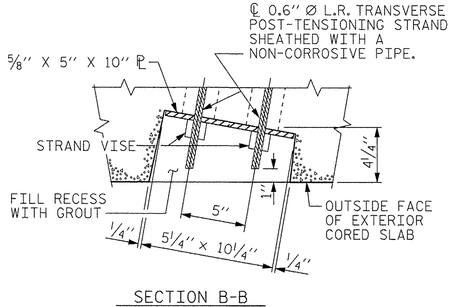

SECTION B-B

CORED SLAB UNIT #1

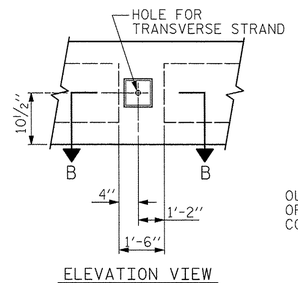

ELEVATION VIEW

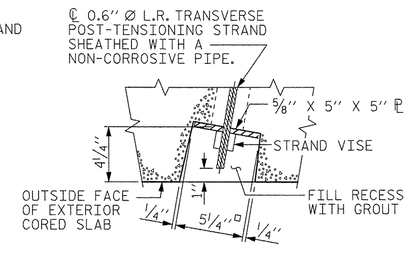

SECTION B-B

CORED SLAB UNIT #9

GROUTED RECESS AT END OF POST-TENSIONED STRAND OF CORED SLABS

PROJECT NO. 17BP.14.R.25

JACKSON COUNTY

STATION: 13+15.70 -L-

SHEET 1 OF 4

AECOM
AECOM TECHNICAL SERVICES, INC.
701 CORPORATE CENTER DRIVE, SUITE 475
RALEIGH, NC 27607
(919) 854-6200 www.aecom.com
AECOM License No. F-0342

NORTH CAROLINA PROFESSIONAL SEAL 030474 ENGINEER JOHN C. MORRISON
4/19/13

STATE OF NORTH CAROLINA
DEPARTMENT OF TRANSPORTATION
RALEIGH

STANDARD
3'-0" X 1'-9"
PRESTRESSED CONCRETE
CORED SLAB UNIT
105° SKEW

REVISIONS						SHEET NO.
NO.	BY:	DATE:	NO.	BY:	DATE:	S-06
1			3			TOTAL SHEETS
2			4			

ASSEMBLED BY :	MJH	DATE :	10/12
CHECKED BY :	JCM	DATE :	10/12
DRAWN BY :	DGE	5/09	REV. 12/11 MAA/AAC
CHECKED BY :	BCH	6/09	

USER: lowenyd
DGN: G:\60123877\400_Tech_Info_Disc_Files\450_NCDOT\Std Tech\Des Files\SR6_282\Structures\S282_TypSect.dgn
DATE: 4/16/2013
TIME: 4:28:41 PM

STD. NO. 21" PCS2_27_105S

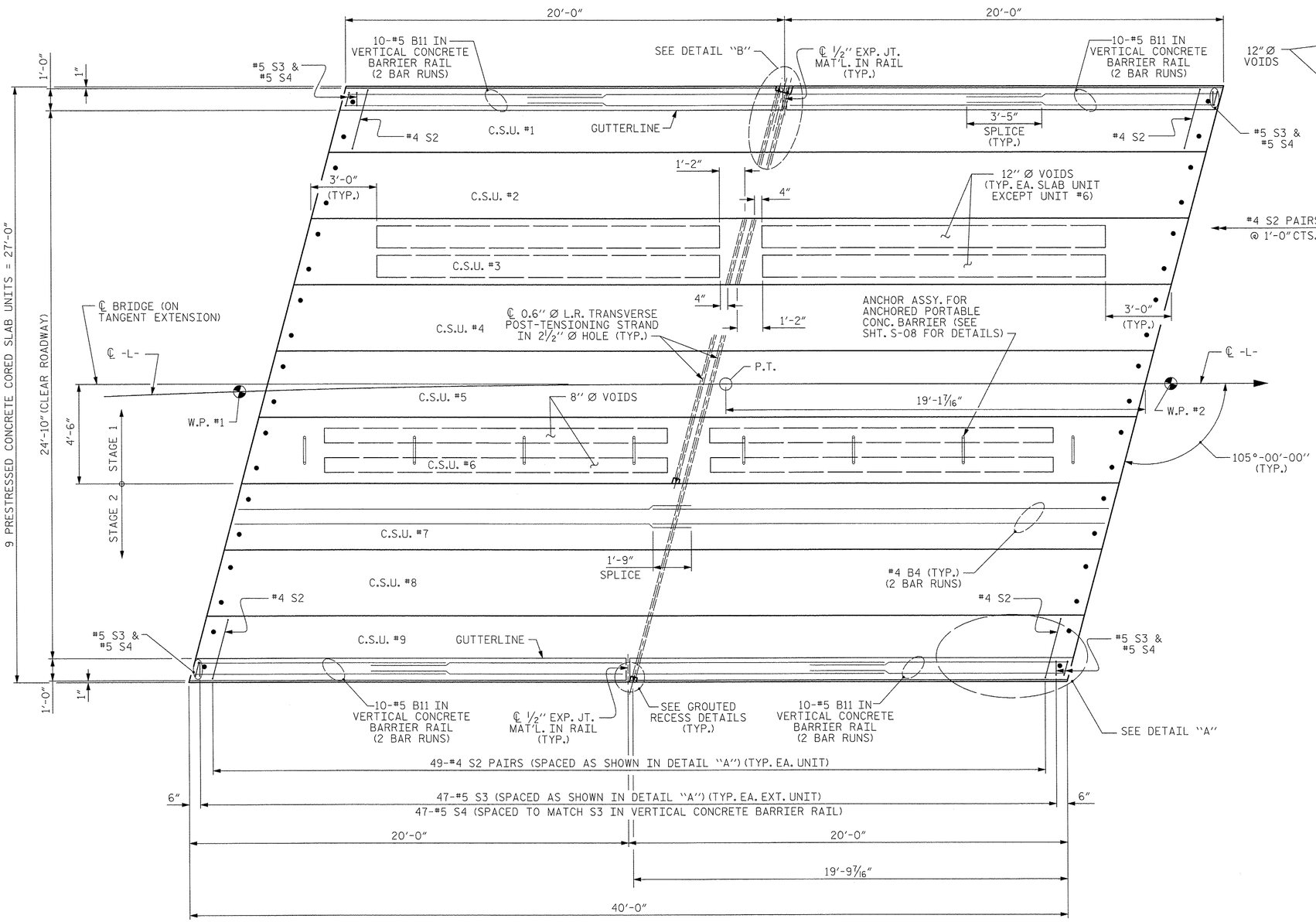

PLAN OF UNIT

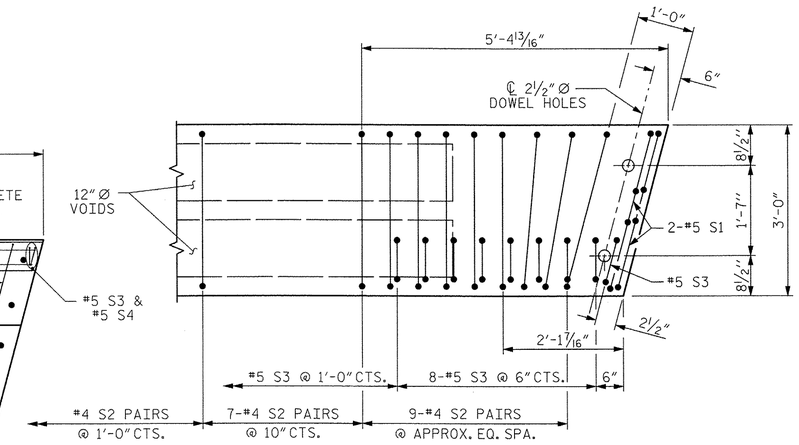

DETAIL "A"

NOTE: EXTERIOR UNIT SHOWN - INTERIOR UNIT SIMILAR EXCEPT OMIT #5 S3 BARS.

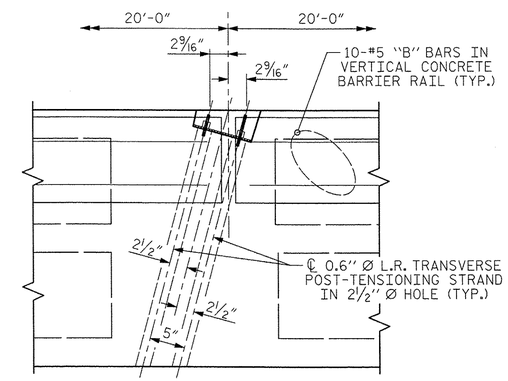

DETAIL "B"

#4 S2 BARS MAY BE SHIFTED AS NECESSARY TO MAINTAIN 1" CLEAR TO GROUTED RECESS AND 2 1/2" Ø TRANSVERSE POST-TENSIONING STRAND HOLES

PROJECT NO. 17BP.14.R.25

JACKSON COUNTY

STATION: 13+15.70 -L-

SHEET 2 OF 4

AECOM
AECOM TECHNICAL SERVICES, INC.
701 CORPORATE CENTER DRIVE, SUITE 475
RALEIGH, NC 27607
(919) 854-6200 www.aecom.com
AECOM License No. F-0342

NORTH CAROLINA PROFESSIONAL SEAL 030474 ENGINEER JOHN C. MORRISON
4/19/13

STATE OF NORTH CAROLINA
DEPARTMENT OF TRANSPORTATION
RALEIGH

PLAN OF 40' UNIT
24'-10" CLEAR ROADWAY
105° SKEW

REVISIONS						SHEET NO.
NO.	BY:	DATE:	NO.	BY:	DATE:	S-07
1			3			TOTAL SHEETS
2			4			

ASSEMBLED BY :	MJH	DATE :	10/12
CHECKED BY :	JCM	DATE :	10/12
DRAWN BY : DGE	5/09	REV. 12/5/11	MAA/AAC
CHECKED BY: BCH	6/09		

STD. NO. 21"PCS_27_105S_40L

13

DATE: 4/16/2013
TIME: 4:05:59 PM

USER: lowerjd
DGN: 0:\50238772\400_Tech_Info_Disc_Files\450_NCDOT\Sdf\edit\DesFiles\BRG_282\Structures\B282_Sponsign

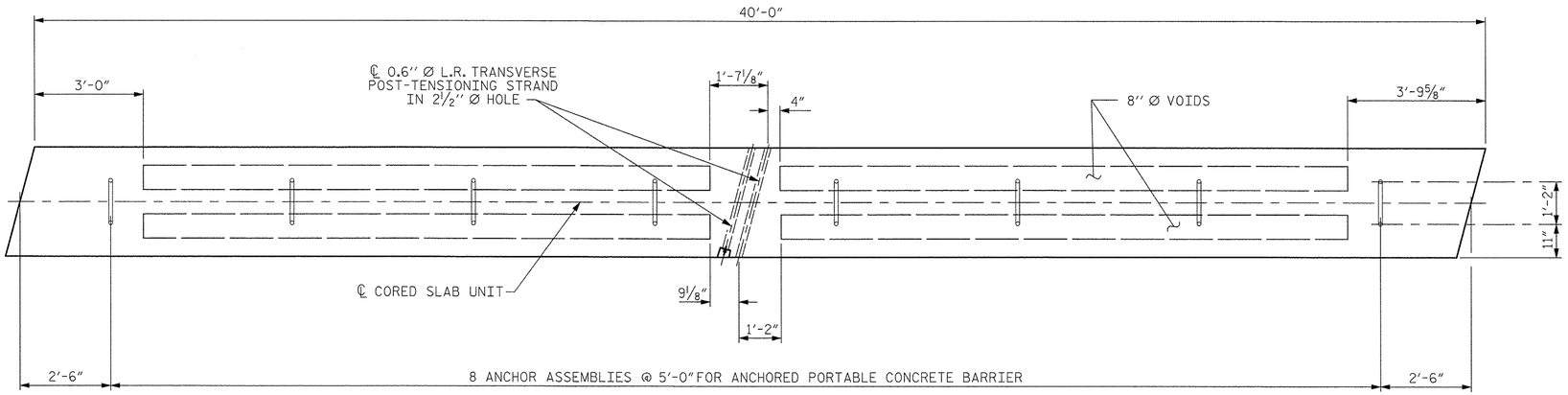

PLAN OF CORED SLAB UNIT #6

(SHOWING LOCATION OF ANCHOR ASSEMBLIES)

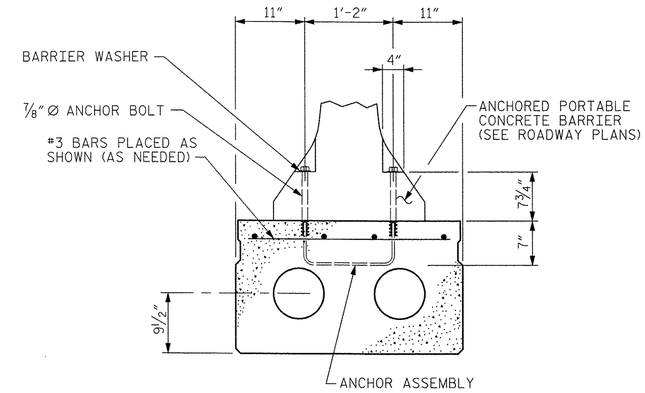

SECTION - CORED SLAB UNIT #6

(SHOWING PLACEMENT OF ANCHOR ASSEMBLY)

THE #3 BARS ARE INCIDENTAL AND THEIR COST SHALL BE INCLUDED IN THE PRICE BID FOR THE PRESTRESSED CONCRETE CORED SLAB

ANCHOR ASSEMBLY NOTES:

THE ANCHOR ASSEMBLY FOR PORTABLE CONCRETE BARRIER SHALL CONSIST OF THE FOLLOWING COMPONENTS:

A. FERRULES SHALL BE MADE FROM STEEL MEETING THE REQUIREMENTS OF AASHTO M169, GRADE 12L14 AND SHALL HAVE A MINIMUM LENGTH OF THREADS OF 2½".

B. 2- ⅞" Ø x 1'-0" ANCHOR BOLTS SHALL CONFORM TO THE REQUIREMENTS OF ASTM A307. ANCHOR BOLTS SHALL BE GALVANIZED. AT THE CONTRACTOR'S OPTION, STAINLESS STEEL BOLTS MAY BE USED AS AN ALTERNATE FOR THE ⅞" Ø x 1'-0" GALVANIZED BOLTS. THEY SHALL CONFORM TO OR EXCEED THE MECHANICAL REQUIREMENTS OF ASTM A307. THE USE OF THIS ALTERNATE SHALL BE APPROVED BY THE ENGINEER.

C. WIRE STRUTS SHOWN IN THE ANCHOR ASSEMBLY DETAIL ARE MINIMUM ALLOWABLE SIZE AND SHALL HAVE A MINIMUM TENSILE STRENGTH OF 100,000 P.S.I.

ANCHOR ASSEMBLY WITH BOLTS SHALL ASSEMBLED IN THE SHOP. BOLT THREADS MAY BE RECUT AS NECESSARY TO INSURE FIT.

THE COST OF THE ANCHOR ASSEMBLY COMPLETE IN PLACE, SHALL BE INCLUDED, AS APPLICABLE, IN THE UNIT CONTRACT PRICE BID FOR 3'-0" x 1'-9" PRESTRESSED CONCRETE CORED SLAB OR LUMP SUM FOR THE APPROACH SLABS.

FERRULES TO BE PLUGGED DURING CASTING OF THE CORED SLAB UNITS OR POURING OF THE APPROACH SLABS AS RECOMMENDED BY THE MANUFACTURER.

AT THE CONTRACTOR'S OPTION, FERRULES WITH OPEN OR CLOSED ENDS MAY BE USED.

FOR 4" x 3½" x ½" BARRIER WASHER TO BE USED WITH THE ANCHOR ASSEMBLY, SEE ROADWAY PLANS.

PAYMENT FOR THE ANCHORED PORTABLE CONCRETE BARRIER AND BARRIER WASHER ARE INCLUDED IN THE TRAFFIC CONTROL PLANS.

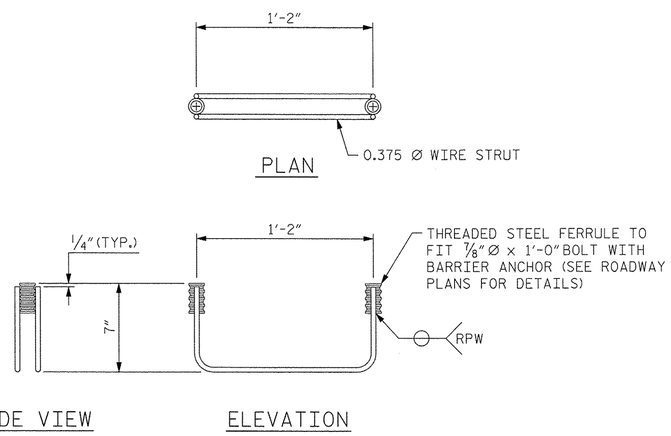

ANCHOR ASSEMBLY FOR ANCHORED PORTABLE CONCRETE BARRIER

(8 ASSEMBLIES REQUIRED IN CORED SLAB UNIT #6)
(4 ASSEMBLIES REQUIRED IN APPROACH SLABS)

PROJECT NO. 17BP.14.R.25
JACKSON COUNTY
STATION: 13+15.70 -L-

SHEET 3 OF 4

AECOM
AECOM TECHNICAL SERVICES, INC.
701 CORPORATE CENTER DRIVE, SUITE 475
RALEIGH, NC 27607
(919) 854-6200 www.aecom.com
AECOM License No. F-0342

NORTH CAROLINA PROFESSIONAL SEAL 030474 ENGINEER JOHN C. MORRISON
4/19/13

STATE OF NORTH CAROLINA
DEPARTMENT OF TRANSPORTATION
RALEIGH

3'-0" X 1'-9"
PRESTRESSED CONCRETE
CORED SLAB UNIT
60° SKEW

REVISIONS						SHEET NO.
NO.	BY:	DATE:	NO.	BY:	DATE:	S-08
						TOTAL SHEETS

DRAWN BY : MTB DATE : 10/12
CHECKED BY : JCM DATE : 10/12

DATE: 4/16/2013
TIME: 4:20:43 PM
USER: lewand
DGN: G:\60123877\2\400_Tech_Info_Dsn_Files\450_NCDOT Staff Tech Dsn Files\DRR_282C\Structures\S282_SpanArchdgn

CORED SLABS REQUIRED			
	NUMBER	LENGTH	TOTAL LENGTH
40' UNIT			
EXTERIOR C.S.	2	40'-0"	80'-0"
INTERIOR C.S.	7	40'-0"	280'-0"
TOTAL	9	40'-0"	360'-0"

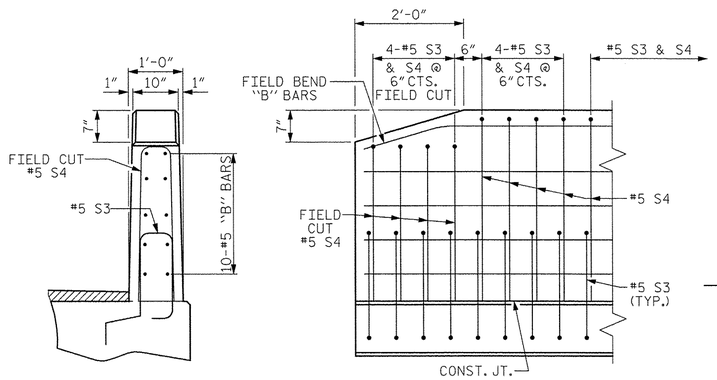

END VIEW

SIDE VIEW

END OF RAIL DETAILS

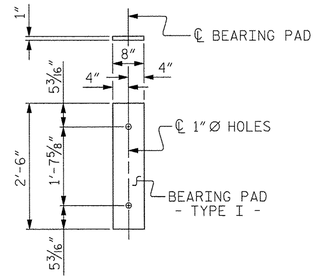

FIXED END
(TYPE I - 18 REQ'D)

ELASTOMERIC BEARING DETAILS

ELASTOMER IN ALL BEARINGS SHALL BE 50 DUROMETER HARDNESS.

BAR TYPES

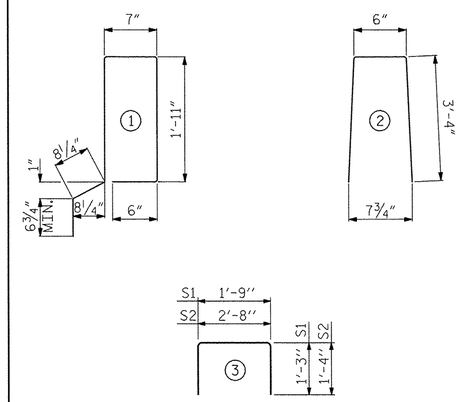

ALL BAR DIMENSIONS ARE OUT TO OUT

NOTES

ALL PRESTRESSING STRANDS SHALL BE 7-WIRE LOW RELAXATION GRADE 270 STRANDS AND SHALL CONFORM TO AASHTO M203 EXCEPT FOR SAMPLING REQUIREMENTS WHICH SHALL BE IN ACCORDANCE WITH THE STANDARD SPECIFICATIONS.

ALL REINFORCING STEEL CAST WITH THE CORED SLAB SECTIONS SHALL BE GRADE 60 AND SHALL BE INCLUDED IN THE UNIT PRICE BID FOR PRESTRESSED CONCRETE CORED SLABS.

RECESSES FOR TRANSVERSE STRANDS SHALL BE GROUTED AFTER THE TENSIONING OF THE STRANDS.

THE 2½" Ø DOWEL HOLES AT FIXED ENDS OF SLAB SECTIONS SHALL BE FILLED WITH NON-SHRINK GROUT.

THE 2" Ø BACKER ROD SHALL CONFORM TO THE REQUIREMENTS OF TYPE M BOND BREAKER. SEE SECTION 1028 OF THE STANDARD SPECIFICATIONS.

WHEN CORED SLABS ARE CAST, AN INTERNAL HOLD-DOWN SYSTEM SHALL BE EMPLOYED TO PREVENT VOIDS FROM RISING OR MOVING SIDEWAYS. AT LEAST SIX WEEKS PRIOR TO CASTING CORED SLABS, THE CONTRACTOR SHALL SUBMIT TO THE ENGINEER FOR REVIEW AND COMMENT, DETAILED DRAWINGS OF THE PROPOSED HOLD-DOWN SYSTEM. IN ADDITION TO STRUCTURAL DETAILS, LOCATION AND SPACING OF THE HOLD-DOWNS SHALL BE INDICATED.

ALL REINFORCING STEEL IN THE VERTICAL CONCRETE BARRIER RAIL SHALL BE EPOXY COATED.

PRESTRESSING STRANDS SHALL BE CUT FLUSH WITH THE CORED SLAB UNIT ENDS.

APPLY EPOXY PROTECTIVE COATING TO CORED SLAB UNIT ENDS.

GROOVED CONTRACTION JOINTS, ½" IN DEPTH, SHALL BE TOOLED IN ALL EXPOSED FACES OF THE BARRIER RAIL AND IN ACCORDANCE WITH ARTICLE 825-10(B) OF THE STANDARD SPECIFICATIONS. A CONTRACTION JOINT SHALL BE LOCATED AT EACH THIRD POINT BETWEEN BARRIER RAIL EXPANSION JOINTS. ONLY ONE CONTRACTION JOINT IS REQUIRED AT MIDPOINT OF BARRIER RAIL SEGMENTS LESS THAN 20 FEET IN LENGTH AND NO CONTRACTION JOINTS ARE REQUIRED FOR THOSE SEGMENTS LESS THAN 10 FEET IN LENGTH.

TRANSVERSE POST TENSIONING OF THE CORED SLAB UNITS SHALL BE DONE IN ACCORDANCE WITH THE STANDARD SPECIFICATIONS.

THE TRANSFER OF LOAD FROM THE ANCHORAGES TO THE CORED SLAB UNIT SHALL BE DONE WHEN THE CONCRETE HAS REACHED A COMPRESSIVE STRENGTH OF NOT LESS THAN THE REQUIRED STRENGTH SHOWN IN THE "CONCRETE RELEASE STRENGTH" TABLE.

FOR GROUT FOR STRUCTURES, SEE SPECIAL PROVISIONS.

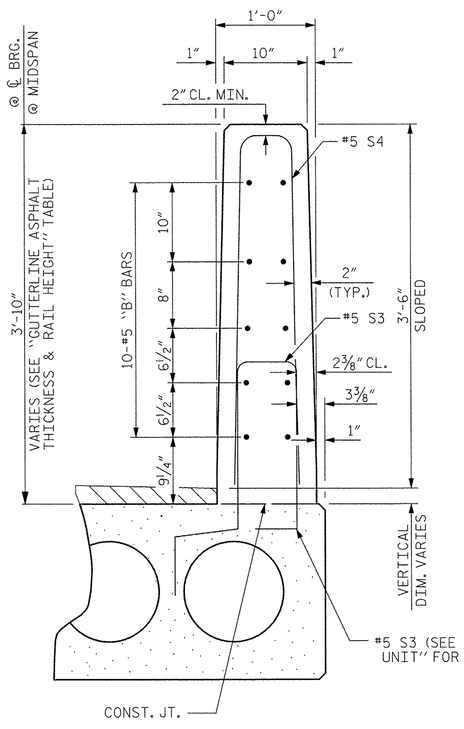

VERTICAL CONCRETE BARRIER RAIL SECTION

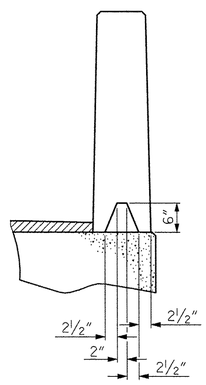

SECTION S-S
AT DAM IN OPEN JOINT
(THIS IS TO BE USED ONLY WHEN SLIP FORM IS USED)

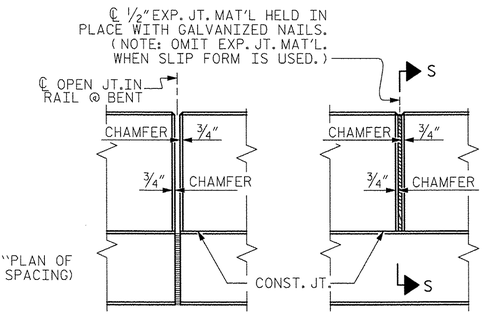

ELEVATION AT EXPANSION JOINTS

GRADE 270 STRANDS	
	0.6" Ø L.R.
AREA (SQUARE INCHES)	0.217
ULTIMATE STRENGTH (LBS. PER STRAND)	58,600
APPLIED PRESTRESS (LBS. PER STRAND)	43,950

BILL OF MATERIAL FOR ONE 40' CORED SLAB UNIT

				EXTERIOR UNIT		INTERIOR UNIT	
BAR	NUMBER	SIZE	TYPE	LENGTH	WEIGHT	LENGTH	WEIGHT
B4	4	#4	STR	20'-8"	55	20'-8"	55
S1	8	#5	3	4'-3"	35	4'-3"	35
S2	98	#4	3	5'-4"	349	5'-4"	349
✱ S3	49	#5	1	6'-2"	315		
REINFORCING STEEL			LBS.		439		439
✱ EPOXY COATED REINFORCING STEEL			LBS.		315		
6500 P.S.I. CONCRETE			CU. YDS.		6.0		6.0 ✱
0.6" Ø L.R. STRANDS			No.		13		13

✱ 8.0 CU. YDS. AT CORED SLAB UNIT #6 ONLY.

GUTTERLINE ASPHALT THICKNESS & RAIL HEIGHT		
24'-10" CLEAR ROADWAY	ASPHALT OVERLAY THICKNESS	RAIL HEIGHT
	@ MID-SPAN	@ MID-SPAN
	SUPERED SECTION	
~~25', 30' & 35' UNITS~~	~~3 3/8"~~	~~3'-9 5/8"~~
40' UNITS	2 5/8"	3'-8 7/8"
~~50' & 55' UNITS~~	~~1 1/2"~~	~~3'-7 3/4"~~

CONCRETE RELEASE STRENGTH	
UNIT	PSI
~~25', 30' & 35' UNITS~~	~~4000~~
40' UNITS	4000
~~50' & 55' UNITS~~	~~4900~~

BILL OF MATERIAL FOR VERTICAL CONCRETE BARRIER RAIL

BAR	BARS PER PAIR OF EXTERIOR UNITS	TOTAL NO.	SIZE	TYPE	LENGTH	WEIGHT
	40' UNIT					
✱ B11	80	80	#5	STR	11'-8"	973
✱ S4	98	98	#5	2	7'-2"	733
✱ EPOXY COATED REINFORCING STEEL				LBS.		1706
CLASS AA CONCRETE				CU.YDS.		10.5
TOTAL VERTICAL CONCRETE BARRIER RAIL				LN. FT.		80.25

DEAD LOAD DEFLECTION AND CAMBER	
	3'-0" x 1'-9"
40' CORED SLAB UNIT	0.6" Ø L.R. STRAND
CAMBER (SLAB ALONE IN PLACE)	1 1/4' ↑
DEFLECTION DUE TO SUPERIMPOSED DEAD LOAD✱✱	1/8" ↓
FINAL CAMBER	1 1/8" ↑

✱✱ INCLUDES FUTURE WEARING SURFACE

PROJECT NO. 17BP.14.R.25
JACKSON COUNTY
STATION: 13+15.70 -L-

SHEET 4 OF 4

AECOM
AECOM TECHNICAL SERVICES, INC.
701 CORPORATE CENTER DRIVE, SUITE 475
RALEIGH, NC 27607
(919) 854-6200 www.aecom.com
AECOM License No. F-0342

NORTH CAROLINA PROFESSIONAL SEAL 030474 ENGINEER JOHN C. MORRISON
4/19/13

STATE OF NORTH CAROLINA
DEPARTMENT OF TRANSPORTATION
RALEIGH

STANDARD
3'-0" X 1'-9"
PRESTRESSED CONCRETE
CORED SLAB UNIT
105° SKEW

REVISIONS						SHEET NO.
NO.	BY:	DATE:	NO.	BY:	DATE:	S-09
1			3			TOTAL SHEETS
2			4			

ASSEMBLED BY :	MJH	DATE :	10/12
CHECKED BY :	JCM	DATE :	10/12
DRAWN BY : DGE 5/09	REV. 12/11	MAA/AAC	
CHECKED BY : BCH 6/09			

DATE: 4/16/2013
TIME: 4:22:09 PM
USER: lewand
DGN: G:\6023877.2\400_Tech_Info_Disc_Files\450_NCDOT Staff Inbox\Files\BR6_2262\Structures\B262_Sponlbdsdgn

STD. NO. 21" PCS3_27_105S

15

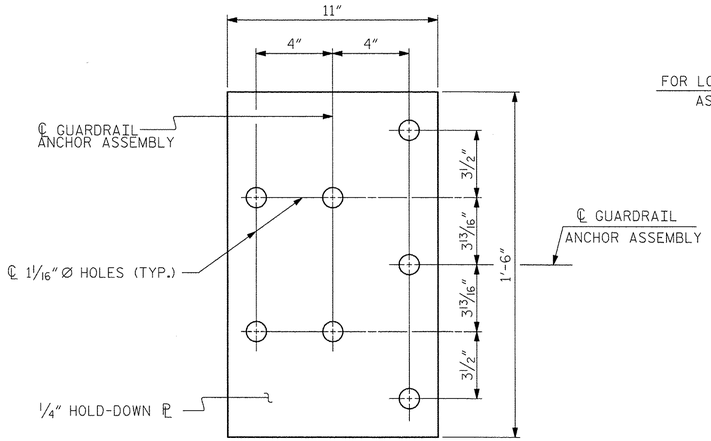

PLAN

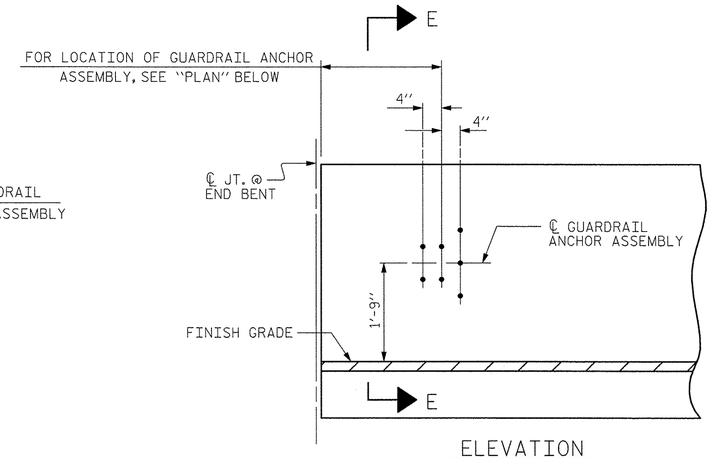

ELEVATION

NOTES

THE GUARDRAIL ANCHOR ASSEMBLY SHALL CONSIST OF A 1/4" HOLD DOWN PLATE AND 7 - 7/8" Ø BOLTS WITH NUTS AND WASHERS.

THE HOLD-DOWN PLATE SHALL CONFORM TO AASHTO M270 GRADE 36. AFTER FABRICATION, THE HOLD-DOWN PLATE SHALL BE HOT-DIP GALVANIZED IN ACCORDANCE WITH AASHTO M111.

BOLTS SHALL CONFORM TO THE REQUIREMENTS OF ASTM A307 AND NUTS SHALL CONFORM TO THE REQUIREMENTS OF AASHTO M291. BOLTS, NUTS AND WASHERS SHALL BE GALVANIZED. (AT THE CONTRACTOR'S OPTION, STAINLESS STEEL BOLTS, NUTS AND WASHERS MAY BE USED AS AN ALTERNATE FOR THE 7/8" Ø GALVANIZED BOLTS, NUTS AND WASHERS. THEY SHALL CONFORM TO OR EXCEED THE MECHANICAL REQUIREMENTS OF ASTM A307. THE USE OF THIS ALTERNATE SHALL BE APPROVED BY THE ENGINEER.)

THE GUARDRAIL ANCHOR ASSEMBLY IS REQUIRED AT ALL POINTS WHERE APPROACH GUARDRAIL IS TO BE ATTACHED TO THE END OF BARRIER RAIL. FOR POINTS OF ATTACHMENT, SEE SKETCH.

AFTER INSTALLATION, THE EXPOSED THREAD OF THE BOLT SHALL BE BURRED WITH A SHARP POINTED TOOL.

THE COST OF THE GUARDRAIL ANCHOR ASSEMBLY SHALL BE INCLUDED IN THE UNIT CONTRACT PRICE BID FOR VERTICAL CONCRETE BARRIER RAIL.

THE VERTICAL REINFORCING BARS MAY BE SHIFTED SLIGHTLY IN THE VERTICAL CONCRETE BARRIER RAIL TO CLEAR ASSEMBLY BOLTS.

THE 1 1/4" Ø HOLES SHALL BE FORMED OR DRILLED WITH A CORE BIT. IMPACT TOOLS WILL NOT BE PERMITTED. ANY CONCRETE DAMAGED BY THIS WORK SHALL BE REPAIRED TO THE SATISFACTION OF THE ENGINEER.

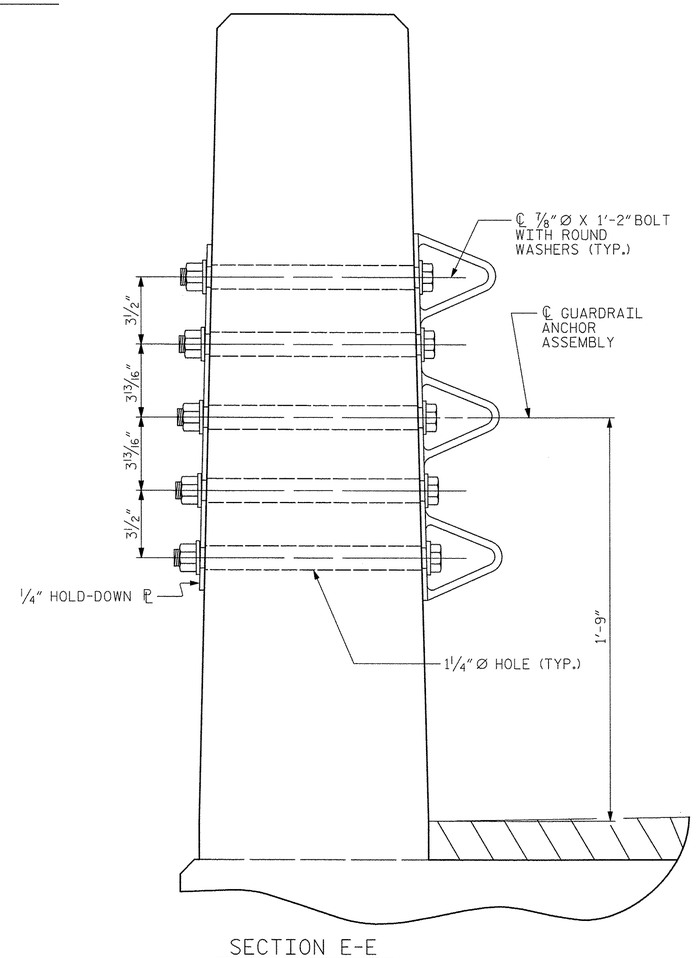

SECTION E-E

GUARDRAIL ANCHOR ASSEMBLY DETAILS

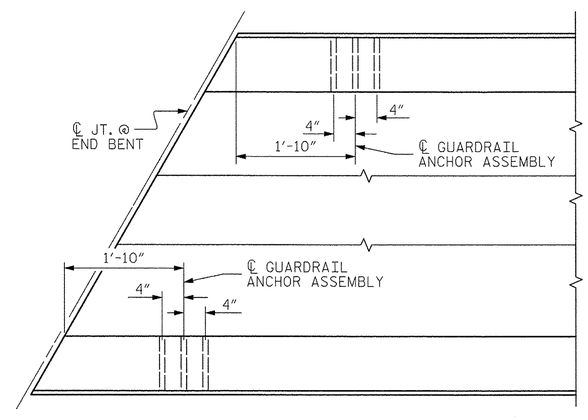

PLAN

LOCATION OF ANCHORS FOR GUARDRAIL

END BENT #1 SHOWN, END BENT #2 SIMILAR.

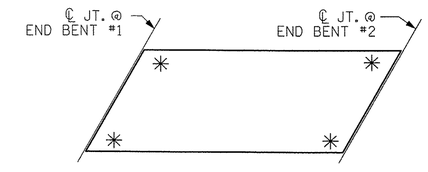

SKETCH SHOWING POINTS OF ATTACHMENT

✳ DENOTES GUARDRAIL ANCHOR ASSEMBLY

PROJECT NO. 17BP.14.R.25

JACKSON COUNTY

STATION: 13+15.70 -L-

ASSEMBLED BY :	MJH	DATE :	10/12
CHECKED BY :	JCM	DATE :	10/12
DRAWN BY : MAA 5/10		ADDED 5/6/10	
CHECKED BY : GM 5/10		REV. 10/1/11	MAA/GM
		REV. 12/5/11	MAA/GM

AECOM
AECOM TECHNICAL SERVICES, INC.
701 CORPORATE CENTER DRIVE, SUITE 475
RALEIGH, NC 27607
(919) 854-6200 www.aecom.com
AECOM License No. F-0342

NORTH CAROLINA PROFESSIONAL SEAL 030474 ENGINEER JOHN C. MORRISON
4/19/13

STATE OF NORTH CAROLINA
DEPARTMENT OF TRANSPORTATION
RALEIGH

STANDARD
GUARDRAIL ANCHORAGE FOR VERTICAL CONCRETE BARRIER RAIL

REVISIONS								SHEET NO.
NO.	BY:	DATE:	NO.	BY:	DATE:			S-10
1			3					TOTAL SHEETS
2			4					

STD. NO. GRA3 (Sht. 2)

DATE: 4/19/2013
TIME: 4:06:06 PM
USER: lowery4
DGN: O:\62238172\400_Tech_Info_Disc_Files\450_NCDOT Std Tech Docs Files\GR6_282\Structure\6282_guardrail.dgn

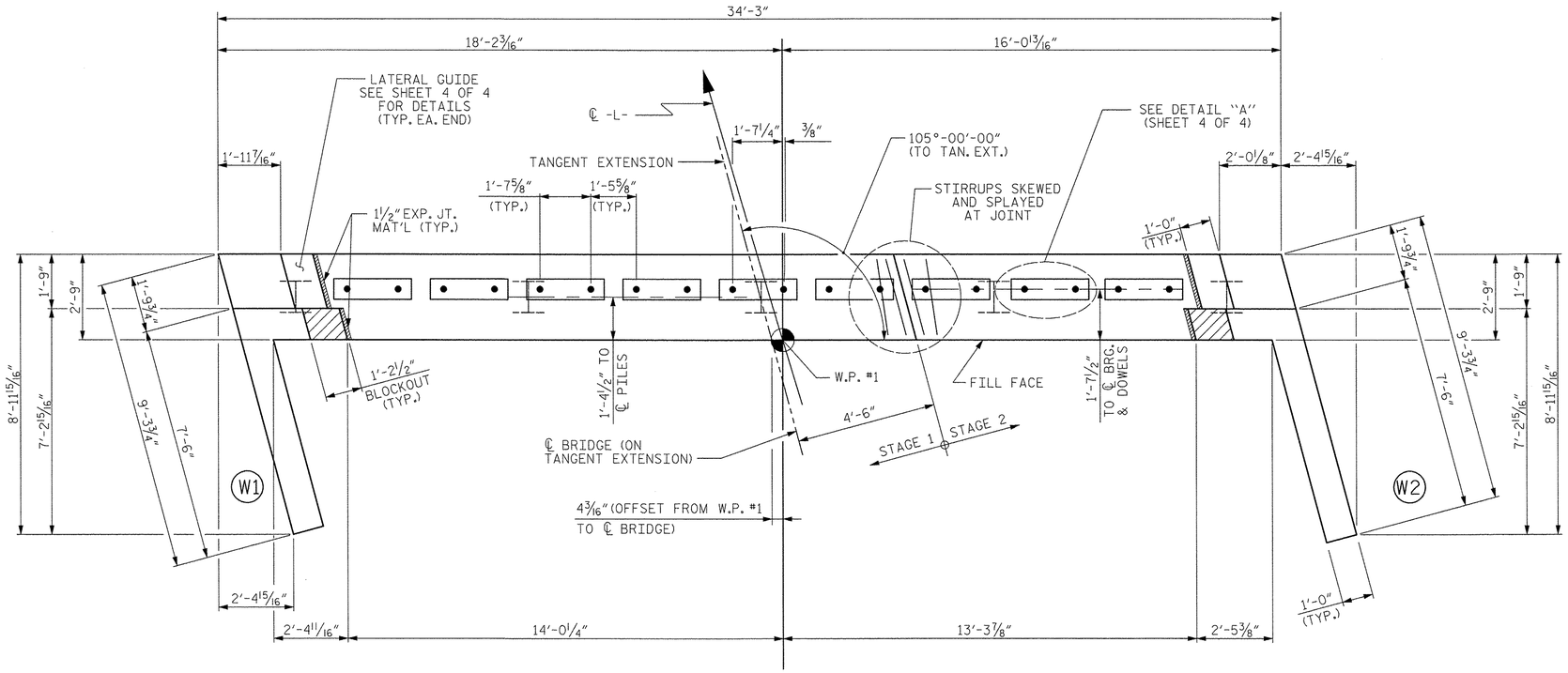

PLAN

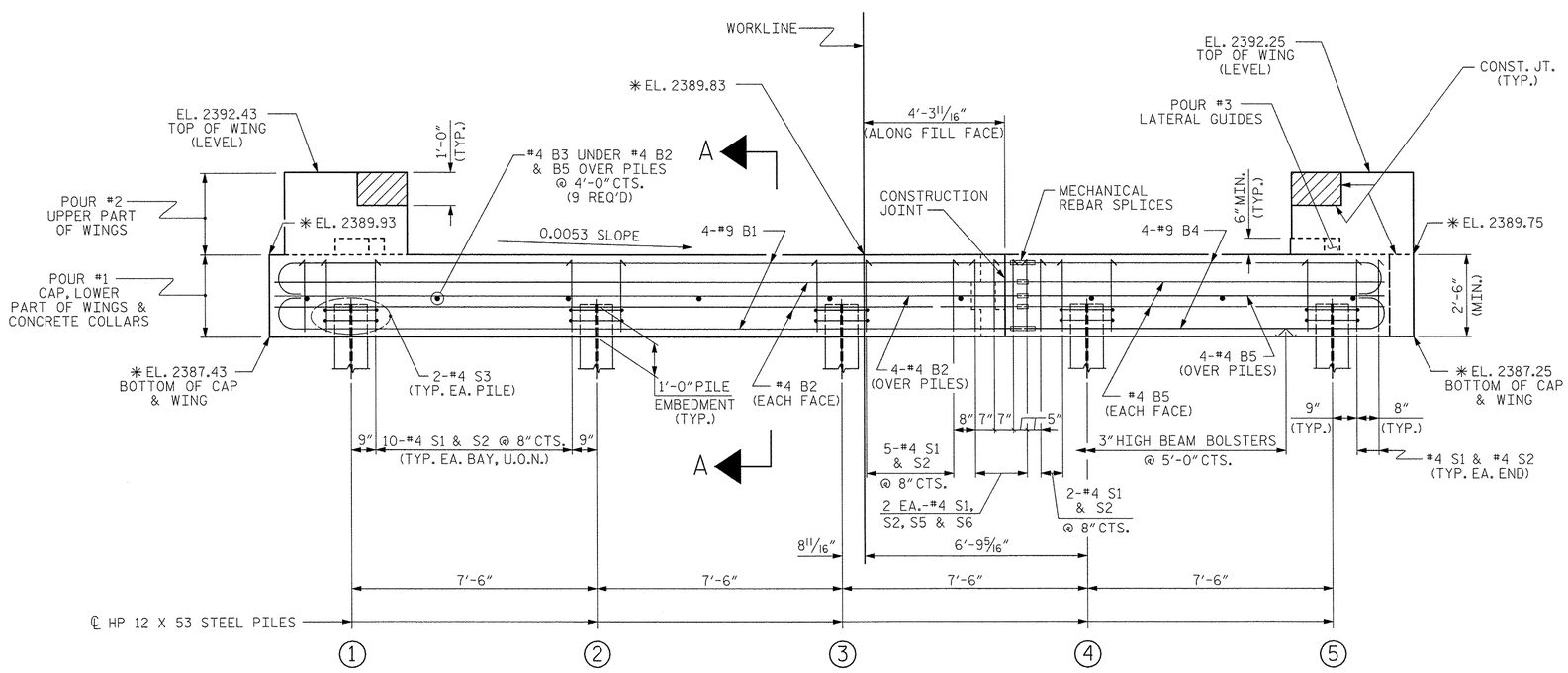

ELEVATION

WINGS NOT SHOWN FOR CLARITY.
FOR SECTION A-A, SEE SHEET 4 OF 4.
CONCRETE COLLARS FOR STEEL PILES NOT SHOWN IN PLAN AND ELEVATION VIEWS FOR CLARITY.
SEE "CORROSION PROTECTION FOR STEEL PILES DETAIL", SHEET 4 OF 4.

NOTES

STIRRUPS IN CAP MAY BE SHIFTED AS NECESSARY TO CLEAR DOWELS.

THE LATERAL GUIDES ARE NOT TO BE POURED UNTIL AFTER THE CORED SLAB UNITS ARE IN PLACE.

THE CONCRETE IN THE SHADED AREA OF THE WING SHALL BE POURED AFTER THE VERTICAL CONCRETE BARRIER RAIL IS CAST IF SLIP FORMING IS USED.

FOR CONSTRUCTION JOINT DETAIL, SEE SHEET 4 OF 4.

FOR PILE SPLICE DETAILS, SEE SHEET 4 OF 4.

FOR WING DETAILS, SEE SHEET 3 OF 4.

THE CONTRACTOR HAS THE OPTION TO OMIT THE LATERAL GUIDE IF APPROVED BY THE ENGINEER.

FOR MECHANICAL SPLICES, SEE SECTION 425-5(B) OF THE STANDARD SPECIFICATIONS.

TOP OF PILE ELEVATIONS	
1	2388.42
2	2388.38
3	2388.34
4	2388.30
5	2388.26

✱ ELEVATIONS PROJECTED ALONG ℄ BEARINGS.

PROJECT NO. 17BP.14.R.25
JACKSON COUNTY
STATION: 13+15.70 -L-

SHEET 1 OF 4

AECOM
AECOM TECHNICAL SERVICES, INC.
701 CORPORATE CENTER DRIVE, SUITE 475
RALEIGH, NC 27607
(919) 854-6200 www.aecom.com
AECOM License No. F-0342

NORTH CAROLINA PROFESSIONAL SEAL 030474 ENGINEER JOHN C. MORRISON
4/19/13

STATE OF NORTH CAROLINA
DEPARTMENT OF TRANSPORTATION
RALEIGH

SUBSTRUCTURE
END BENT No. 1

REVISIONS						
NO.	BY:	DATE:	NO.	BY:	DATE:	
1			3			
2			4			

SHEET NO. S-11
TOTAL SHEETS

ASSEMBLED BY :	MJH	DATE :	10/12
CHECKED BY :	JCM	DATE :	10/12
DRAWN BY :	DGE	03/10	
CHECKED BY :	MKT	03/10	

STD. NO. EB_27_105S

DATE: 4/16/2013
TIME: 4:08:35 PM
USER: lowend
DGN: G:\6\25387\72\400_Tech_Info_Disc_Files\450_NCDOT\Staff\eb\Dist\Files\GRG_28\Structures\8282_EndBent.dgn

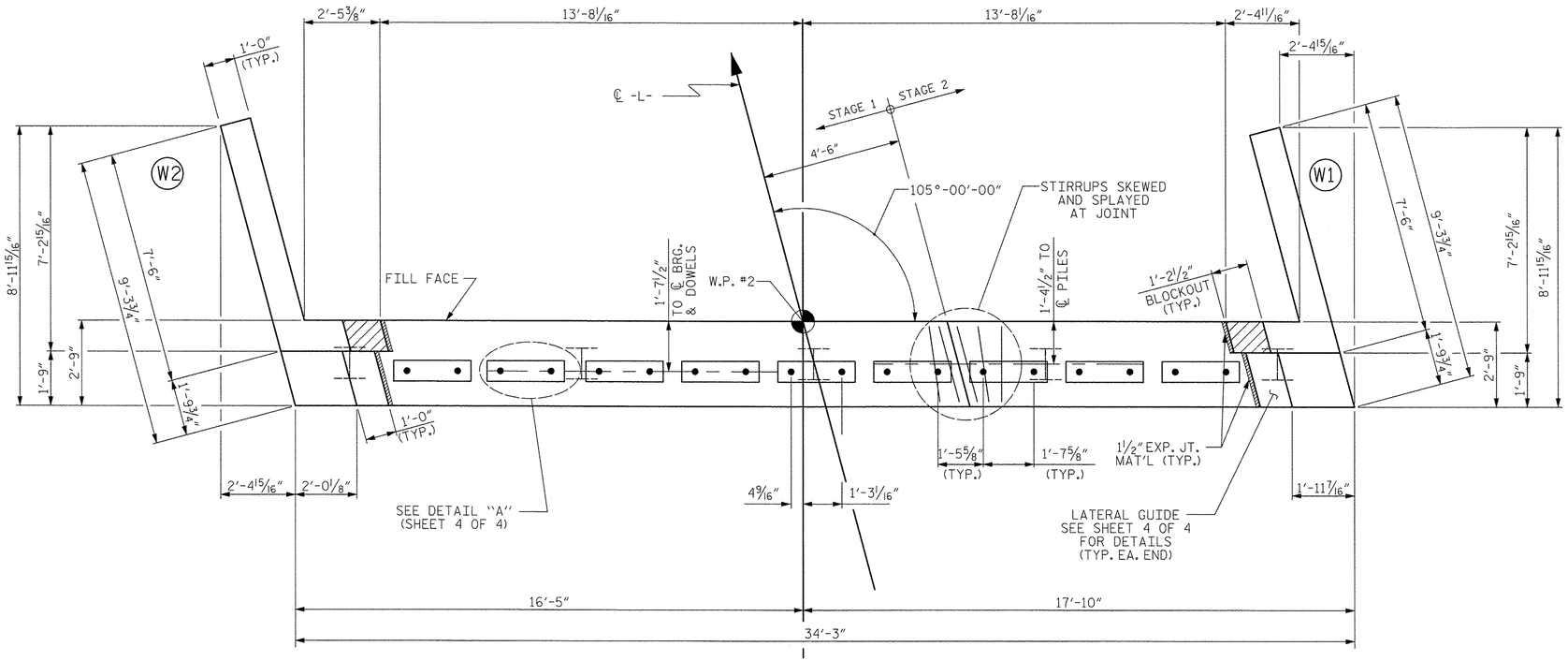

PLAN

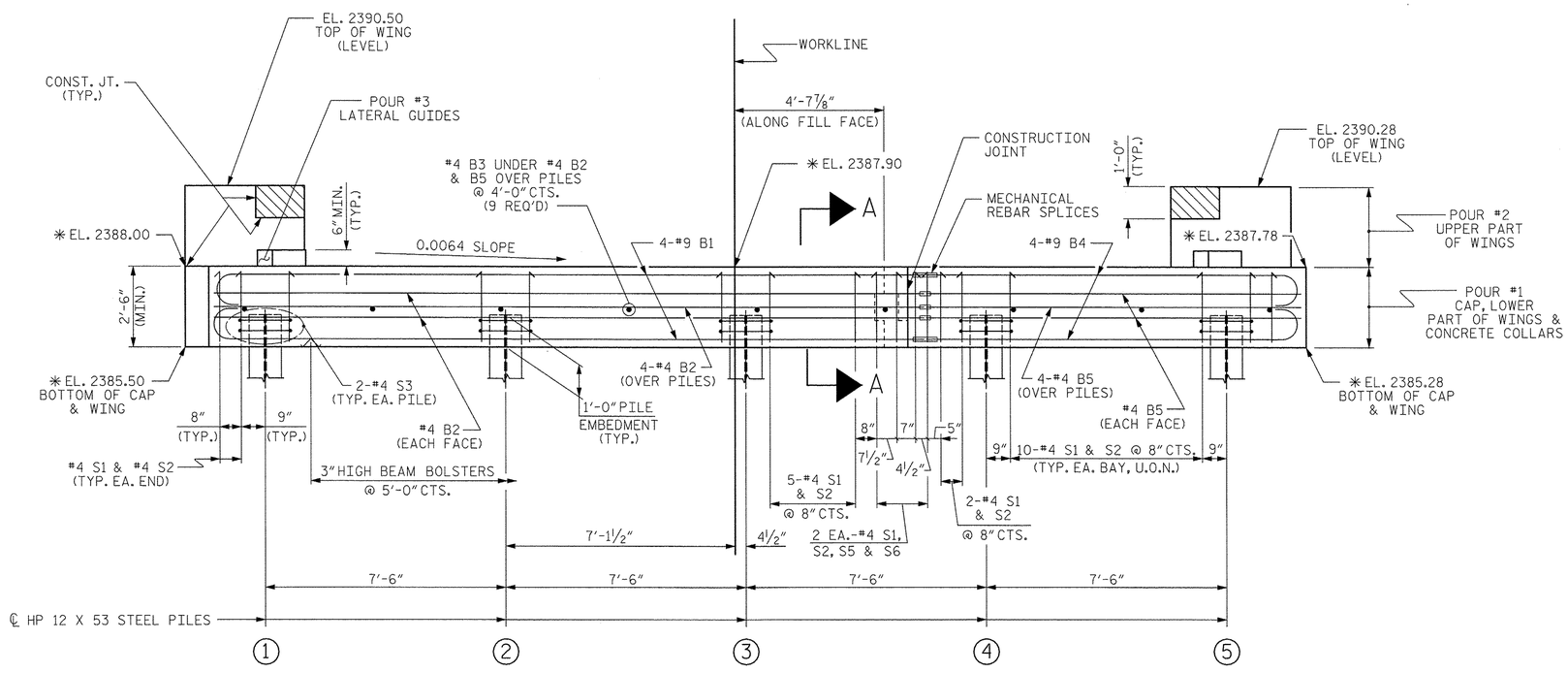

ELEVATION

WINGS NOT SHOWN FOR CLARITY.
FOR SECTION A-A, SEE SHEET 4 OF 4.
CONCRETE COLLARS FOR STEEL PILES NOT SHOWN IN PLAN AND ELEVATION VIEWS FOR CLARITY.
SEE "CORROSION PROTECTION FOR STEEL PILES DETAIL", SHEET 4 OF 4.

NOTES

STIRRUPS IN CAP MAY BE SHIFTED AS NECESSARY TO CLEAR DOWELS.

THE LATERAL GUIDES ARE NOT TO BE POURED UNTIL AFTER THE CORED SLAB UNITS ARE IN PLACE.

THE CONCRETE IN THE SHADED AREA OF THE WING SHALL BE POURED AFTER THE VERTICAL CONCRETE BARRIER RAIL IS CAST IF SLIP FORMING IS USED.

FOR CONSTRUCTION JOINT DETAIL, SEE SHEET 4 OF 4.

FOR PILE SPLICE DETAILS, SEE SHEET 4 OF 4.

FOR WING DETAILS, SEE SHEET 3 OF 4.

THE CONTRACTOR HAS THE OPTION TO OMIT THE LATERAL GUIDE IF APPROVED BY THE ENGINEER.

FOR MECHANICAL SPLICES, SEE SECTION 425-5(B) OF THE STANDARD SPECIFICATIONS.

TOP OF PILE ELEVATIONS	
1	2386.49
2	2386.44
3	2386.39
4	2386.34
5	2386.30

✳ ELEVATIONS PROJECTED ALONG ℄ BEARINGS.

PROJECT NO. 17BP.14.R.25
JACKSON COUNTY
STATION: 13+15.70 -L-
SHEET 2 OF 4

AECOM
AECOM TECHNICAL SERVICES, INC.
701 CORPORATE CENTER DRIVE, SUITE 475
RALEIGH, NC 27607
(919) 854-6200 www.aecom.com
AECOM License No. F-0342

NORTH CAROLINA PROFESSIONAL SEAL 030474 ENGINEER JOHN C. MORRISON
4/19/13

STATE OF NORTH CAROLINA
DEPARTMENT OF TRANSPORTATION
RALEIGH

SUBSTRUCTURE
END BENT No. 2

ASSEMBLED BY : MJH	DATE : 10/12
CHECKED BY : JCM	DATE : 10/12
DRAWN BY : DGE 03/10	
CHECKED BY : MKT 03/10	

REVISIONS							SHEET NO.
NO.	BY:	DATE:	NO.	BY:	DATE:		S-12
1			3				TOTAL SHEETS
2			4				

STD. NO. EB_27_105S

DATE: 4/19/2013
TIME: 4:09:25 PM
USER: lowerod
DGN: C:\SDI\23877C\400_Tech_Info_Disc_Files\450_NCDOT Std Det Files\BRG_2012\Structures\B282_EndBent2.dgn

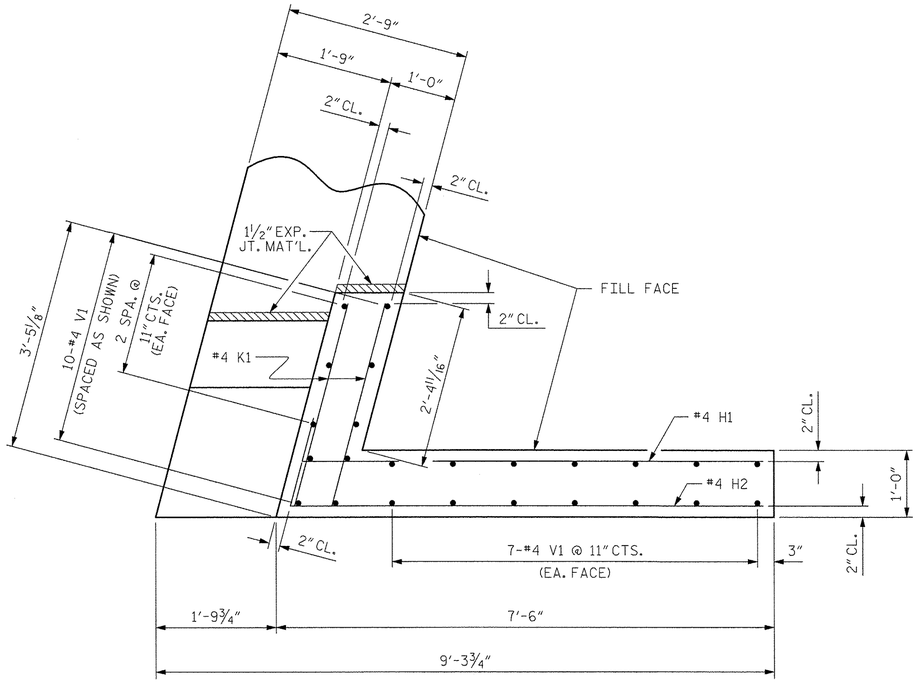

PLAN OF WING (W1)

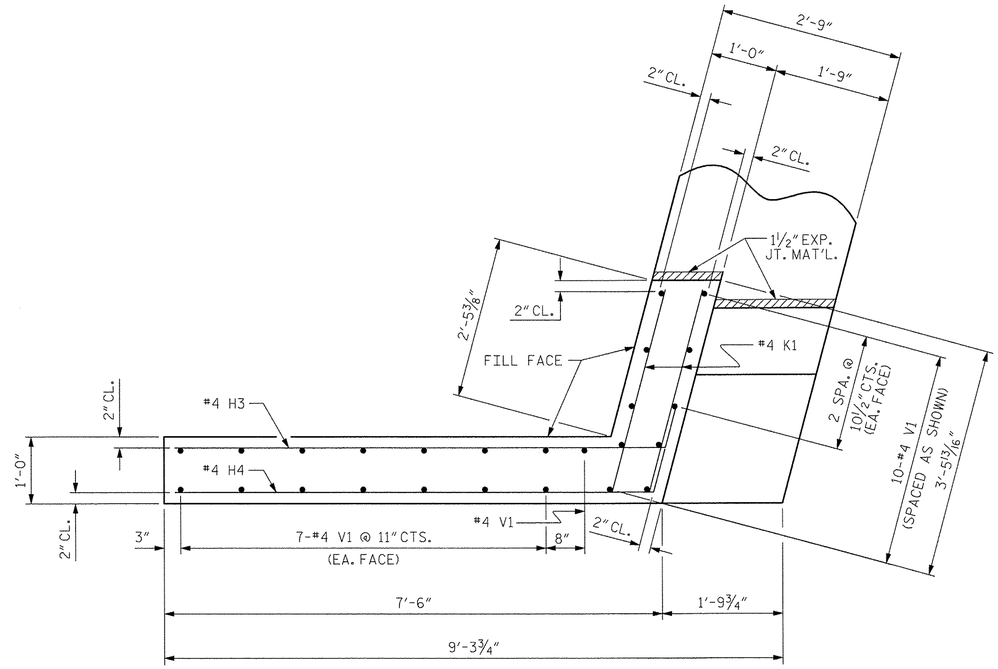

PLAN OF WING (W2)

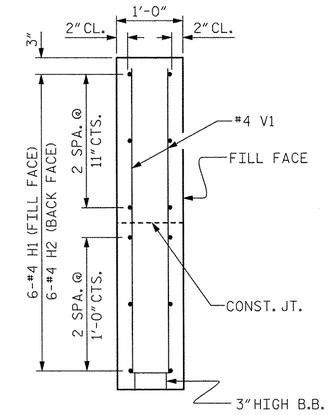

SECTION X-X

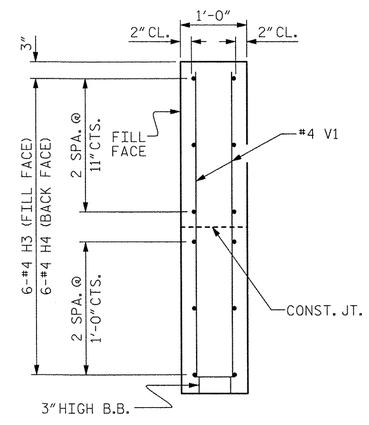

SECTION Y-Y

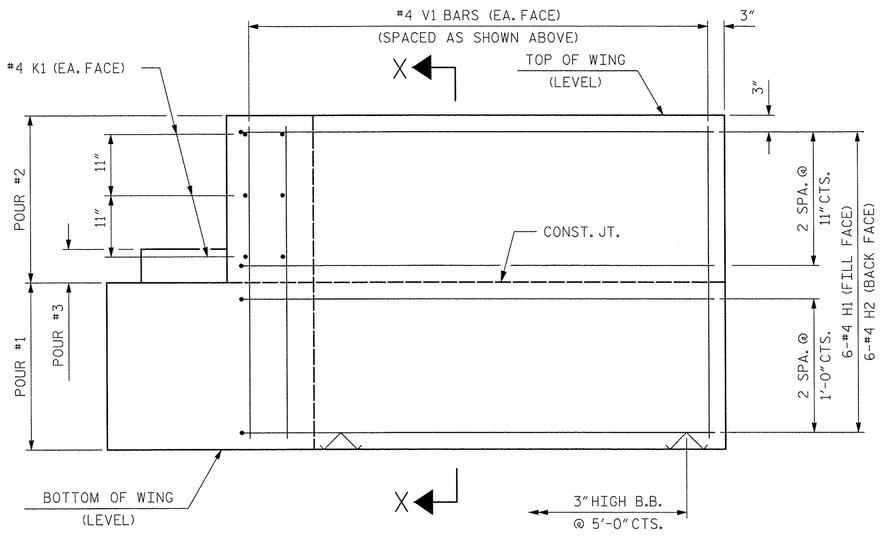

ELEVATION OF WING (W1)

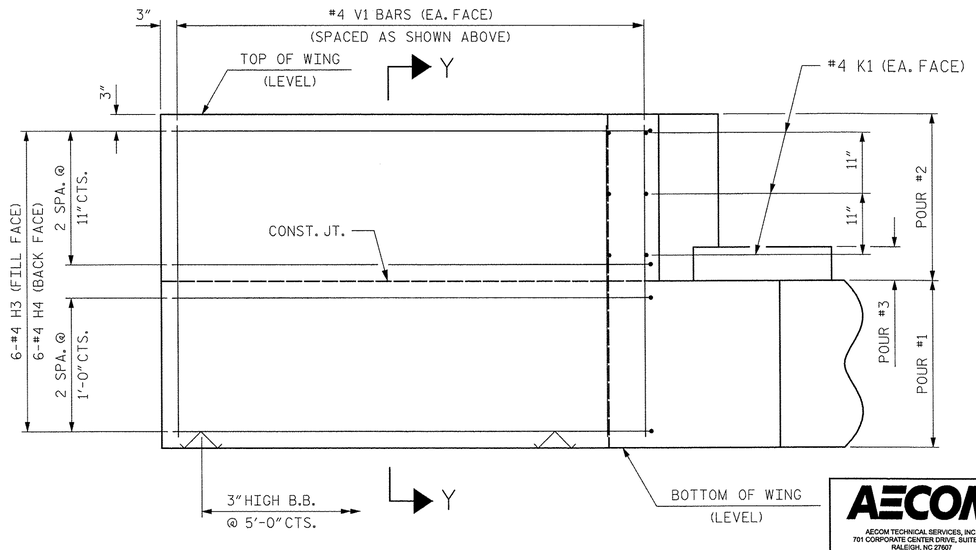

ELEVATION OF WING (W2)

WING DETAILS

PROJECT NO. 17BP.14.R.25

JACKSON COUNTY

STATION: 13+15.70 -L-

SHEET 3 OF 4

AECOM

AECOM TECHNICAL SERVICES, INC.
701 CORPORATE CENTER DRIVE, SUITE 475
RALEIGH, NC 27607
(919) 854-6200 www.aecom.com
AECOM License No. F-0342

NORTH CAROLINA PROFESSIONAL SEAL 030474 ENGINEER JOHN C. MORRISON
4/19/13

STATE OF NORTH CAROLINA
DEPARTMENT OF TRANSPORTATION
RALEIGH

SUBSTRUCTURE
END BENT
WING DETAILS

REVISIONS						SHEET NO.
NO.	BY:	DATE:	NO.	BY:	DATE:	S-13
1			3			TOTAL SHEETS
2			4			

ASSEMBLED BY :	MJH	DATE :	10/12
CHECKED BY :	JCM	DATE :	10/12
DRAWN BY :	DGE	03/10	
CHECKED BY :	MKT	03/10	

STD. NO. EB_27_105S

DATE: 4/16/2013
TIME: 4:08:46 PM

USER: lwarcyd
DGN: G:\6223872\400_Tech_Info_Disc_Files\450_NCDOT Std Tech Des Files\BR6_282\Structure\B282_EndBentWings.dgn

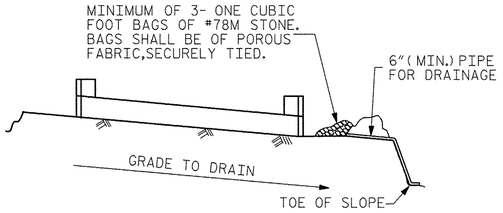

BAGGED STONE AND PIPE SHALL BE PLACED IMMEDIATELY AFTER COMPLETION OF END BENT EXCAVATION. PIPE MAY BE EITHER CONCRETE, CORRUGATED STEEL, CORRUGATED ALUMINUM ALLOY, OR CORRUGATED PLASTIC. PERFORATED PIPE WILL NOT BE ALLOWED.

BAGGED STONE SHALL REMAIN IN PLACE UNTIL THE ENGINEER DIRECTS THAT IT BE REMOVED. THE CONTRACTOR SHALL REMOVE AND DISPOSE OF SILT ACCUMULATIONS AT BAGGED STONE WHEN SO DIRECTED BY THE ENGINEER. BAGS SHALL BE REMOVED AND REPLACED WHENEVER THE ENGINEER DETERMINES THAT THEY HAVE DETERIORATED AND LOST THEIR EFFECTIVENESS.

NO SEPARATE PAYMENT WILL BE MADE FOR THIS WORK AND THE ENTIRE COST OF THIS WORK SHALL BE INCLUDED IN THE UNIT CONTRACT PRICE BID FOR THE SEVERAL PAY ITEMS.

TEMPORARY DRAINAGE AT END BENT

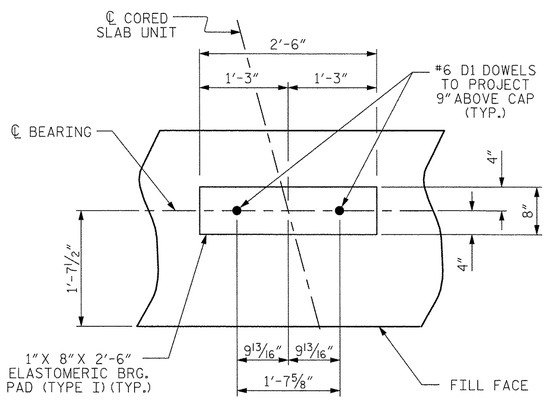

DETAIL "A"

(END BENT No. 1 SHOWN, END BENT No. 2 SIMILAR BY ROTATION)

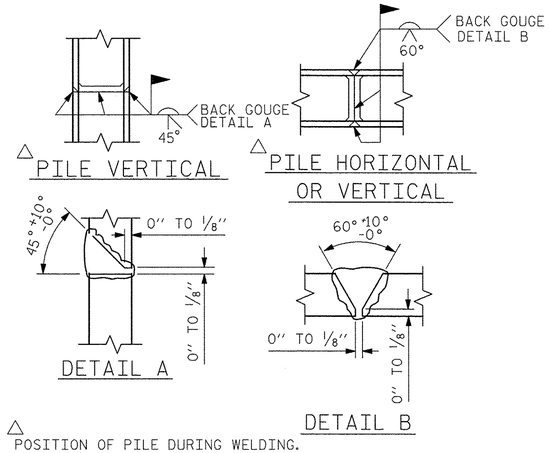

△ POSITION OF PILE DURING WELDING.

PILE SPLICE DETAILS

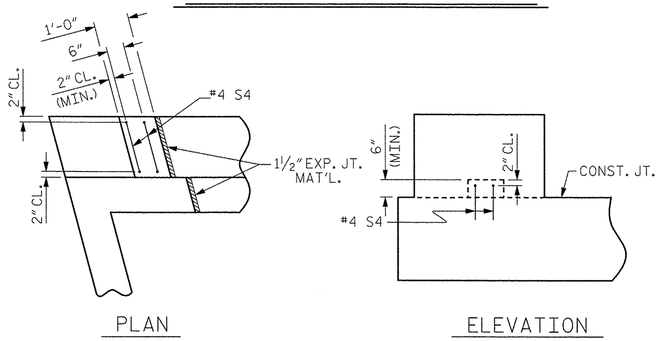

LATERAL GUIDE DETAILS

(END BENT No. 1, LEFT LATERAL GUIDE SHOWN, RIGHT END SIMILAR)
(END BENT No. 2 SIMILAR BY ROTATION)

BAR TYPES

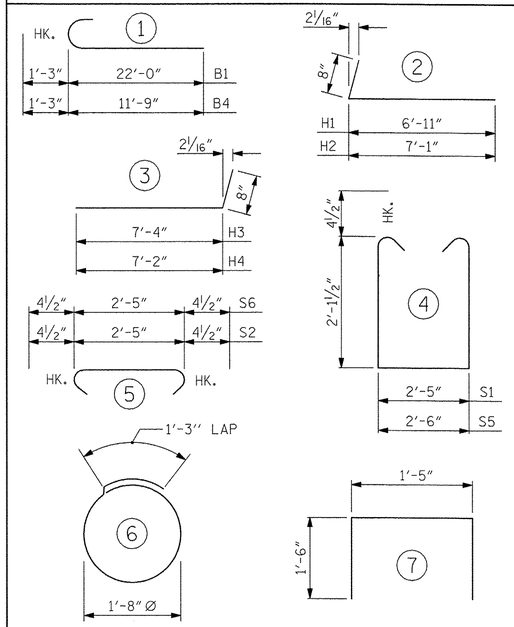

ALL BAR DIMENSIONS ARE OUT TO OUT.

END BENT No. 1	END BENT No. 2
HP 12 X 53 STEEL PILES	HP 12 X 53 STEEL PILES
NO: 5 LIN. FT.= 215	NO: 5 LIN. FT.= 185
STEEL PILE POINTS	STEEL PILE POINTS
NO: 5	NO: 5

BILL OF MATERIAL FOR ONE END BENT

BAR	NO.	SIZE	TYPE	LENGTH	WEIGHT
B1	8	#9	1	23'-3" *	632
B2	8	#4	STR	22'-0" *	118
B3	9	#4	STR	2'-5"	15
B4	8	#9	1	13'-0" *	354
B5	8	#4	STR	11'-9" *	63
D1	18	#6	STR	1'-6"	41
H1	6	#4	2	7'-7"	30
H2	6	#4	2	7'-9"	31
H3	6	#4	3	8'-0"	32
H4	6	#4	3	7'-10"	31
K1	12	#4	STR	3'-1"	25
S1	43	#4	4	7'-5"	213
S2	43	#4	5	3'-2"	91
S3	10	#4	6	6'-6"	43
S4	4	#4	7	4'-5"	12
S5	2	#4	4	7'-6"	10
S6	2	#4	5	3'-3"	4
V1	49	#4	STR	4'-8"	153

REINFORCING STEEL (FOR ONE END BENT) 1898 LBS.

CLASS A CONCRETE BREAKDOWN (FOR ONE END BENT)

POUR #1 CAP, LOWER PART OF WINGS & COLLARS 10.8 C.Y.

POUR #2 UPPER PART OF WINGS 1.8 C.Y.

POUR #3 LATERAL GUIDES 0.1 C.Y.

TOTAL CLASS A CONCRETE 12.7 C.Y.

* MECHANICAL COUPLERS ARE REQUIRED. ADJUST BAR LENGTHS AS NECESSARY FOR THE APPROVED SPLICE MECHANISM USED. FOR MECHANICAL SPLICES, SEE SECTION 425-5(B) OF THE STANDARD SPECIFICATIONS.

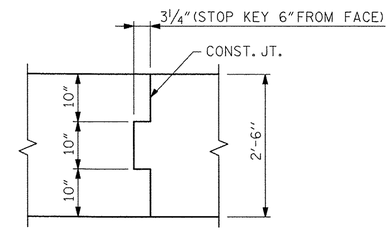

CONST. JT. DETAIL

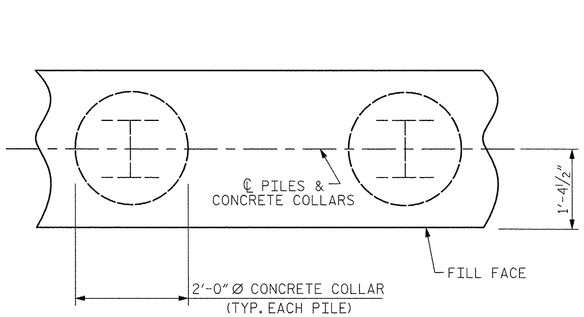

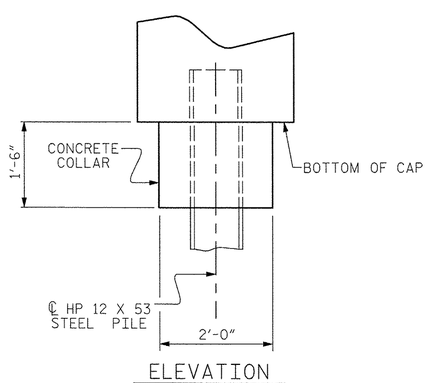

CORROSION PROTECTION FOR STEEL PILES DETAIL

(END BENT No. 1 SHOWN, END BENT No. 2 SIMILAR BY ROTATION)

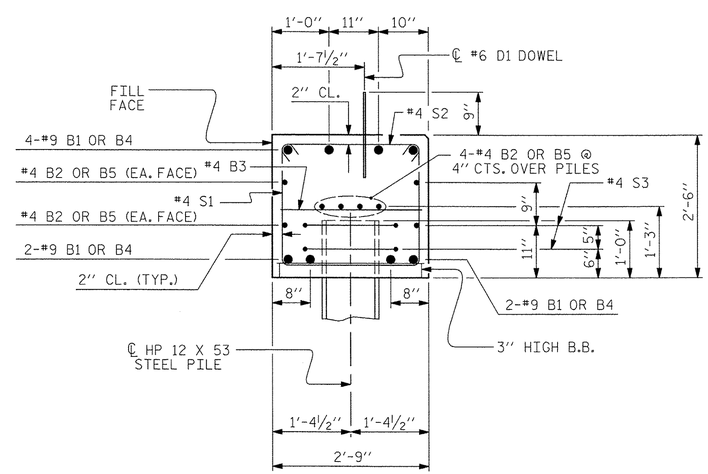

SECTION A-A

(CONCRETE COLLAR NOT SHOWN FOR CLARITY.
SEE "CORROSION PROTECTION FOR STEEL PILES DETAIL.")

PROJECT NO. 17BP.14.R.25

JACKSON COUNTY

STATION: 13+15.70 -L-

SHEET 4 OF 4

AECOM
AECOM TECHNICAL SERVICES, INC.
701 CORPORATE CENTER DRIVE, SUITE 475
RALEIGH, NC 27607
(919) 854-6200 www.aecom.com
AECOM License No. F-0342

NORTH CAROLINA PROFESSIONAL SEAL 030474 ENGINEER JOHN C. MORRISON
4/19/13

STATE OF NORTH CAROLINA
DEPARTMENT OF TRANSPORTATION
RALEIGH

SUBSTRUCTURE

END BENT No. 1 & 2 DETAILS

REVISIONS						SHEET NO.
NO.	BY:	DATE:	NO.	BY:	DATE:	S-14
1			3			TOTAL SHEETS
2			4			

STD. NO. EB_27_105S

ASSEMBLED BY :	MJH	DATE :	10/12
CHECKED BY :	JCM	DATE :	10/12
DRAWN BY :	DGE	03/10	
CHECKED BY :	MKT	03/10	

DATE: 4/18/2013
TIME: 4:02:04 PM

USER: lawrence
DGN: G:\60258772\400_Tech_Info_Disc_Files\450_NCDOT\SDTech\BeFiles\BRG_282\Structures\B282_EndBentDets.dgn

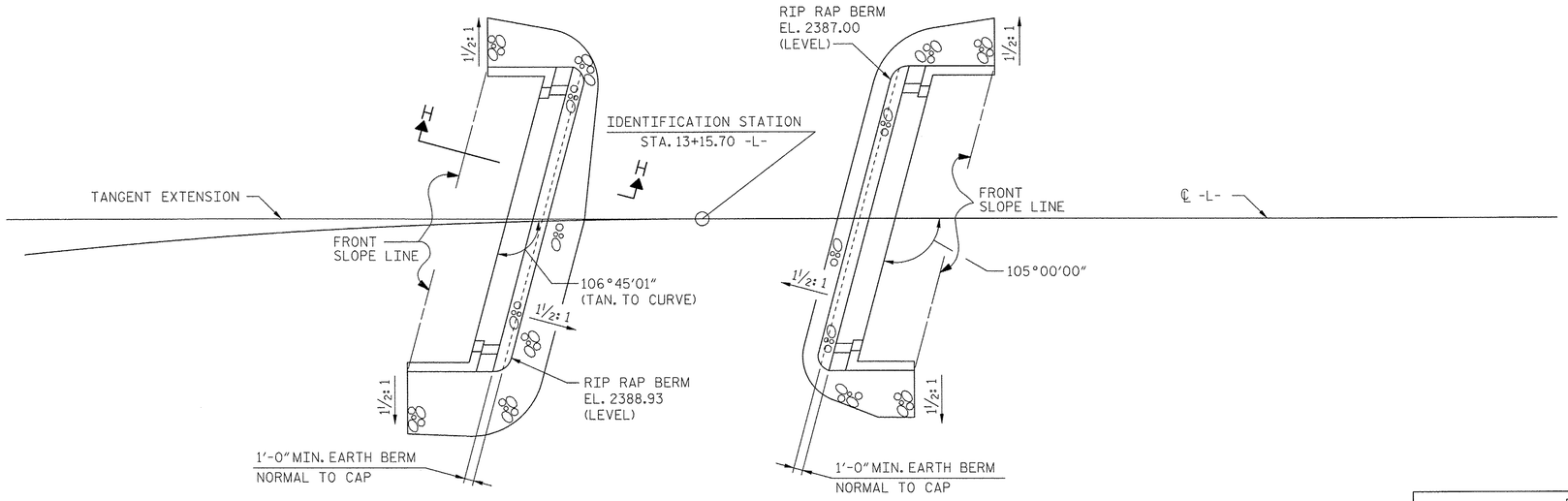

BERM RIP RAPPED
AT END BENT No. 1

BERM RIP RAPPED
AT END BENT No. 2

ESTIMATED QUANTITIES		
BRIDGE @ STA. 13+15.70 -L-	RIP RAP CLASS II (2'-0" THICK)	GEOTEXTILE FOR DRAINAGE
	TONS	SQUARE YARDS
END BENT 1	35	39
END BENT 2	22	24

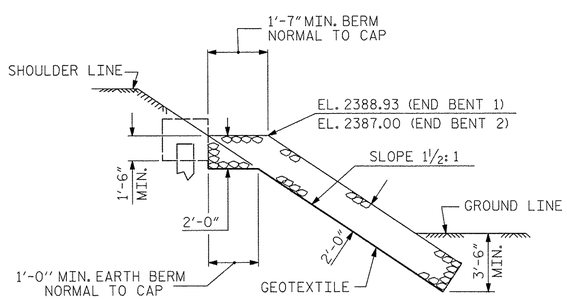

SECTION H-H

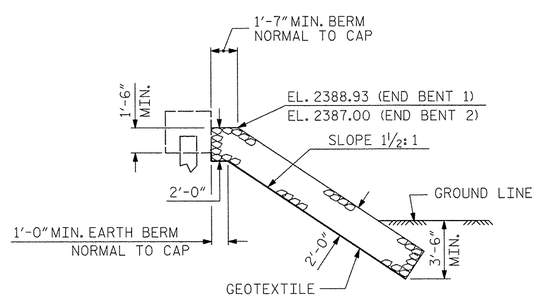

℄ SECTION
BERM RIP RAPPED

PROJECT NO. 17BP.14.R.25

JACKSON **COUNTY**

STATION: 13+15.70 -L-

AECOM
AECOM TECHNICAL SERVICES, INC.
701 CORPORATE CENTER DRIVE, SUITE 475
RALEIGH, NC 27607
(919) 854-6200 www.aecom.com
AECOM License No. F-0342

NORTH CAROLINA PROFESSIONAL SEAL 030474 ENGINEER JOHN C. MORRISON
4/19/13

STATE OF NORTH CAROLINA
DEPARTMENT OF TRANSPORTATION
RALEIGH

RIP RAP DETAILS

REVISIONS						SHEET NO.
NO.	BY:	DATE:	NO.	BY:	DATE:	S-15
1			3			TOTAL SHEETS
2			4			

DRAWN BY :	MJH	DATE :	10/12
CHECKED BY :	JCM	DATE :	10/12

DATE: 4/16/2013
TIME: 4:48:24 PM

USER: lowerjvt
DGN: D:\SDE2\377\2v400_Tech_Info_Disc_Files\450_NCDOT Std Text Dist Files\DRG_282\Structures\0282_Riprap.dgn

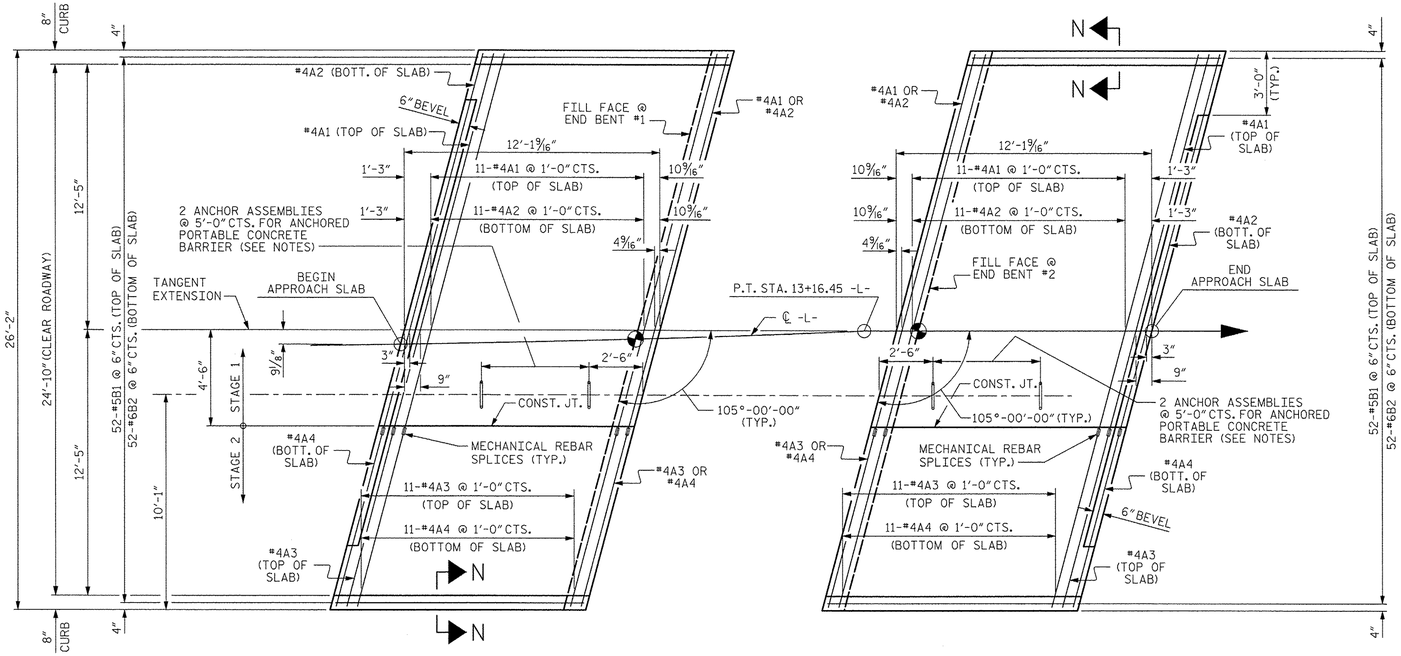

PLAN @ END BENT #1

PLAN @ END BENT #2

DIMENSIONS SHOWN ARE TYPICAL FOR BOTH APPROACH SLABS

NOTES

FOR BRIDGE APPROACH FILL INCLUDING GEOTEXTILE, 4" Ø DRAINAGE PIPE, AND #78M STONE BACKFILL, SEE ROADWAY PLANS.

GEOTEXTILE SHALL BE TYPE 1 IN ACCORDANCE WITH THE STANDARD SPECIFICATIONS SECTION 1056.

#78M STONE BACKFILL (CLASS V SELECT MATERIAL) SHALL BE IN ACCORDANCE WITH STANDARD SPECIFICATIONS SECTION 1016.

#78M STONE BACKFILL IS TO BE CONTINUOUS ALONG FILL FACE OF BACKWALL FROM OUTSIDE EDGE TO OUTSIDE EDGE OF APPROACH SLAB.

FOR THE 4" Ø DRAINAGE PIPE OUTLET(S), SEE ROADWAY STANDARD DRAWINGS.

AREA BETWEEN THE WINGWALL AND APPROACH SLAB SHALL BE GRADED TO DRAIN THE WATER AWAY FROM THE FILL FACE OF THE BRIDGE AND SHALL BE PAVED. SEE ROADWAY PLANS.

APPROACH SLAB GROOVING IS NOT REQUIRED.

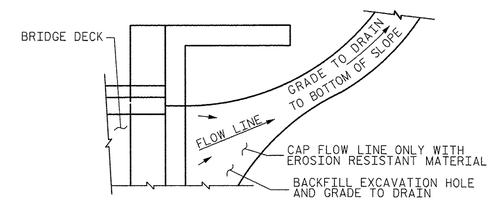

NOTE: IF THE APPROACH SLAB IS NOT CONSTRUCTED IMMEDIATELY AFTER THE BACKFILLING OF THE END BENT EXCAVATION, GRADE TO DRAIN TO THE BOTTOM OF THE SLOPE AND PROVIDE EROSION RESISTANT MATERIAL, SUCH AS FIBERGLASS ROVING OR AS DIRECTED BY THE ENGINEER TO PREVENT SOIL EROSION AND TO PROTECT THE AREA ADJACENT TO THE STRUCTURE. THE CONTRACTOR WILL BE REQUIRED TO REMOVE THESE MATERIALS PRIOR TO CONSTRUCTION OF THE APPROACH SLAB.

BILL OF MATERIAL

APPROACH SLAB AT EB #1

BAR	NO.	SIZE	TYPE	LENGTH	WEIGHT
* A1	13	#4	STR	18'-3" **	158
A2	13	#4	STR	18'-3" **	158
* A3	13	#4	STR	8'-5" **	73
A4	13	#4	STR	8'-5" **	73
* B1	52	#5	STR	11'-1"	601
B2	52	#6	STR	11'-7"	905
REINFORCING STEEL				LBS.	1136
* EPOXY COATED REINFORCING STEEL				LBS.	832
CLASS AA CONCRETE				C. Y.	15.2

APPROACH SLAB AT EB #2

BAR	NO.	SIZE	TYPE	LENGTH	WEIGHT
* A1	13	#4	STR	18'-3" **	158
A2	13	#4	STR	18'-3" **	158
* A3	13	#4	STR	8'-5" **	73
A4	13	#4	STR	8'-5" **	73
* B1	52	#5	STR	11'-1"	601
B2	52	#6	STR	11'-7"	905
REINFORCING STEEL				LBS.	1136
* EPOXY COATED REINFORCING STEEL				LBS.	832
CLASS AA CONCRETE				C. Y.	15.2

** MECHANICAL COUPLERS ARE REQUIRED. ADJUST BAR LENGTHS AS NECESSARY FOR THE APPROVED SPLICE MECHANISM USED. FOR MECHANICAL SPLICES, SEE SECTION 425-5(B) OF THE STANDARD SPECIFICATIONS.

TEMPORARY DRAINAGE DETAIL

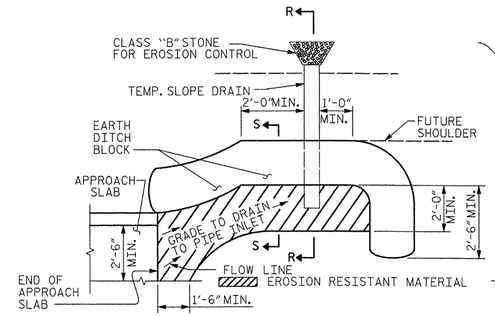

NOTE: IMMEDIATELY AFTER THE CONSTRUCTION OF THE APPROACH SLAB, THE CONTRACTOR SHALL PROVIDE TEMPORARY BERM AND SLOPE DRAIN. CONTRACTOR SHALL GRADE TO PIPE INLET AND PROVIDE EROSION RESISTANT MATERIAL AS SHOWN. THE EROSION RESISTANT MATERIAL SHALL BE EITHER 1) ASPHALT PLANT MIX, TYPE 1 OR TYPE 2, MIN. 2" DEPTH, 2) EROSION CONTROL MAT, OR 3) CONCRETE, AS DIRECTED BY THE ENGINEER. THE SLOPE DRAIN SHALL CONSIST OF A NON-PERFORATED TEMPORARY DRAINAGE PIPE, 12 INCHES IN DIAMETER.

PLAN VIEW

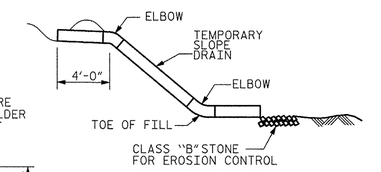

SECTION R-R

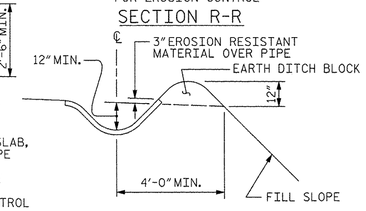

SECTION S-S

TEMPORARY BERM AND SLOPE DRAIN DETAILS

(TO BE USED WHEN SHOULDER BERM GUTTER IS REQUIRED)

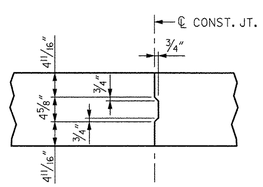

CONSTRUCTION JOINT DETAIL

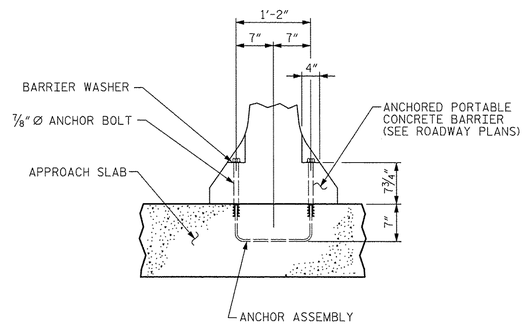

ANCHOR ASSEMBLY PLACEMENT DETAIL

(SHOWING PLACEMENT OF ANCHOR ASSEMBLY)

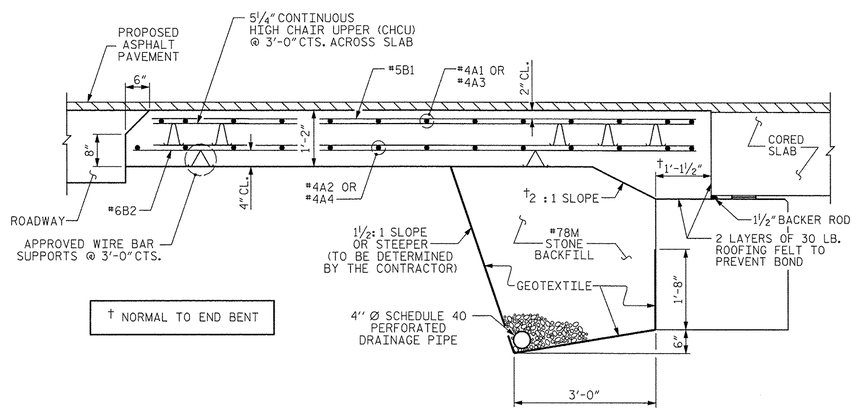

† NORMAL TO END BENT

SECTION THRU SLAB

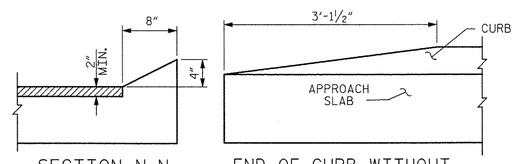

SECTION N-N

END OF CURB WITHOUT SHOULDER BERM GUTTER

CURB DETAILS

SPLICE LENGTHS		
BAR SIZE	EPOXY COATED	UNCOATED
#4	2'-0"	1'-9"
#5	2'-6"	2'-2"
#6	3'-10"	2'-7"

PROJECT NO. 17BP.14.R.25

JACKSON COUNTY

STATION: 13+15.70 -L-

AECOM
AECOM TECHNICAL SERVICES, INC.
701 CORPORATE CENTER DRIVE, SUITE 475
RALEIGH, NC 27607
(919) 854-6200 www.aecom.com
AECOM License No. F-0342

NORTH CAROLINA PROFESSIONAL SEAL 030474 ENGINEER JOHN C. MORRISON
4/19/13

STATE OF NORTH CAROLINA
DEPARTMENT OF TRANSPORTATION
RALEIGH

STANDARD BRIDGE APPROACH SLAB FOR PRESTRESSED CONCRETE CORED SLAB UNIT (SUB-REGIONAL TIER) 105° SKEW

ASSEMBLED BY : MJH	DATE : 10/12
CHECKED BY : JCM	DATE : 10/12
DRAWN BY : SHS/MAA 5-09	REV. 12-11 MAA/AAC
CHECKED BY : BCH 5-09	

REVISIONS							SHEET NO.
NO.	BY:	DATE:	NO.	BY:	DATE:		S-16
1			3				TOTAL SHEETS
2			4				

STD. NO. BAS_27_105S

DATE: 4/16/2013
TIME: 3:32:05 PM
USER: lowery1
DGN: G:\60123817\2-400_Tech_Info_Disc_Files\450_NCDOT Staff tech\bridge Files\BRG_2.2\2S\Structure\S2S2_AppSlab.dgn

STANDARD NOTES

DESIGN DATA:

SPECIFICATIONS	A.A.S.H.T.O. (CURRENT)
LIVE LOAD	SEE PLANS
IMPACT ALLOWANCE	SEE A.A.S.H.T.O.
STRESS IN EXTREME FIBER OF	
STRUCTURAL STEEL - AASHTO M270 GRADE 36	20,000 LBS. PER SQ. IN.
- AASHTO M270 GRADE 50W	27,000 LBS. PER SQ. IN.
- AASHTO M270 GRADE 50	27,000 LBS. PER SQ. IN.
REINFORCING STEEL IN TENSION	
GRADE 60	24,000 LBS. PER SQ. IN.
CONCRETE IN COMPRESSION	1,200 LBS. PER SQ. IN.
CONCRETE IN SHEAR	SEE A.A.S.H.T.O.
STRUCTURAL TIMBER - TREATED OR	
UNTREATED - EXTREME FIBER STRESS	1,800 LBS. PER SQ. IN.
COMPRESSION PERPENDICULAR TO GRAIN OF TIMBER	375 LBS. PER SQ. IN.
EQUIVALENT FLUID PRESSURE OF EARTH	30 LBS. PER CU. FT. (MINIMUM)

MATERIAL AND WORKMANSHIP:

EXCEPT AS MAY OTHERWISE BE SPECIFIED ON PLANS OR IN THE SPECIAL PROVISIONS, ALL MATERIAL AND WORKMANSHIP SHALL BE IN ACCORDANCE WITH THE 2012 "STANDARD SPECIFICATIONS FOR ROADS AND STRUCTURES" OF THE N. C. DEPARTMENT OF TRANSPORTATION.

STEEL SHEET PILING FOR PERMANENT OR TEMPORARY APPLICATIONS SHALL BE HOT ROLLED.

CONCRETE:

UNLESS OTHERWISE REQUIRED ON PLANS, CLASS A CONCRETE SHALL BE USED FOR ALL PORTIONS OF ALL STRUCTURES WITH THE EXCEPTION THAT: CLASS AA CONCRETE SHALL BE USED IN BRIDGE SUPERSTRUCTURES, ABUTMENT BACKWALLS, AND APPROACH SLABS; AND CLASS B CONCRETE SHALL BE USED FOR SLOPE PROTECTION AND RIP RAP.

CONCRETE CHAMFERS:

UNLESS OTHERWISE NOTED ON THE PLANS, ALL EXPOSED CORNERS ON STRUCTURES SHALL BE CHAMFERED 3/4" WITH THE FOLLOWING EXCEPTIONS: TOP CORNERS OF CURBS MAY BE ROUNDED TO 1-1/2" RADIUS WHICH IS BUILT INTO CURB FORMS; CORNERS OF TRANSVERSE FLOOR EXPANSION JOINTS SHALL BE ROUNDED WITH A 1/4" FINISHING TOOL UNLESS OTHERWISE REQUIRED ON PLANS; AND CORNERS OF EXPANSION JOINTS IN THE ROADWAY FACES AND TOPS OF CURBS AND SIDEWALKS SHALL BE ROUNDED TO A 1/4" RADIUS WITH A FINISHING STONE OR TOOL UNLESS OTHERWISE REQUIRED ON PLANS.

DOWELS:

DOWELS WHEN INDICATED ON PLANS AS FOR CULVERT EXTENSIONS, SHALL BE EMBEDDED AT LEAST 12" INTO THE OLD CONCRETE AND GROUTED INTO PLACE WITH 1:2 CEMENT MORTAR.

ALLOWANCE FOR DEAD LOAD DEFLECTION, SETTLEMENT, ETC. IN CASTING SUPERSTRUCTURES:

BRIDGES SHALL BE BUILT ON THE GRADE OR VERTICAL CURVE SHOWN ON PLANS. SLABS, CURBS AND PARAPETS SHALL CONFORM TO THE GRADE OR CURVE.

ALL DIMENSIONS WHICH ARE GIVEN IN SECTION AND ARE AFFECTED BY DEAD LOAD DEFLECTIONS ARE DIMENSIONS AT CENTER LINE OF BEARING UNLESS OTHERWISE NOTED ON PLANS. IN SETTING FORMS FOR STEEL BEAM BRIDGES AND PRESTRESSED CONCRETE GIRDER BRIDGES, ADJUSTMENTS SHALL BE MADE DUE TO THE DEAD LOAD DEFLECTIONS FOR THE ELEVATIONS SHOWN. WHERE BLOCKS ARE SHOWN OVER BEAMS FOR BUILDING UP TO THE SLAB, THE VERTICAL DIMENSIONS OF THE BLOCKS SHALL BE ADJUSTED BETWEEN BEARINGS TO COMPENSATE FOR DEAD LOAD DEFLECTIONS, VERTICAL CURVE ORDINATE, AND ACTUAL BEAM CAMBER. WHERE BOTTOM OF SLAB IS IN LINE WITH BOTTOM OF TOP FLANGES, DEPTH OF SLAB BETWEEN BEARINGS SHALL BE ADJUSTED TO COMPENSATE FOR DEAD LOAD DEFLECTION, VERTICAL CURVE ORDINATE, AND ACTUAL BEAM CAMBER.

IN SETTING FALSEWORK AND FORMS FOR REINFORCED CONCRETE SPANS, AN ALLOWANCE SHALL BE MADE FOR DEAD LOAD DEFLECTIONS, SETTLEMENT OF FALSEWORK, AND PERMANENT CAMBER WHICH SHALL BE PROVIDED FOR IN ADDITION TO THE ELEVATIONS SHOWN. AFTER REMOVAL OF THE FALSEWORK, THE FINISHED STRUCTURES SHALL CONFORM TO THE PROFILE AND ELEVATIONS SHOWN ON THE PLANS AND CONSTRUCTION ELEVATIONS FURNISHED BY THE ENGINEER.

DETAILED DRAWINGS FOR FALSEWORK OR FORMS FOR BRIDGE SUPERSTRUCTURE AND ANY STRUCTURE OR PARTS OF A STRUCTURE AS NOTED ON THE PLANS SHALL BE SUBMITTED TO THE ENGINEER FOR APPROVAL BEFORE CONSTRUCTION OF THE FALSEWORK OR FORMS IS STARTED.

REINFORCING STEEL:

ALL REINFORCING STEEL SHALL BE DEFORMED. DIMENSIONS RELATIVE TO PLACEMENT OF REINFORCING ARE TO CENTERS OF BARS UNLESS OTHERWISE INDICATED IN THE PLANS. DIMENSIONS ON BAR DETAILS ARE TO CENTERS OF BARS OR ARE OUT TO OUT AS INDICATED ON PLANS.

WIRE BAR SUPPORTS SHALL BE PROVIDED FOR REINFORCING STEEL WHERE INDICATED ON THE PLANS. WHEN BAR SUPPORT PIECES ARE PLACED IN CONTINUOUS LINES, THEY SHALL BE SO PLACED THAT THE ENDS OF THE SUPPORTING WIRES SHALL BE LAPPED TO LOCK LEGS ON ADJOINING PIECES.

STRUCTURAL STEEL:

AT THE CONTRACTOR'S OPTION, HE MAY SUBSTITUTE 7/8" Ø SHEAR STUDS FOR THE ¾" Ø STUDS SPECIFIED ON THE PLANS. THIS SUBSTITUTION SHALL BE MADE AT THE RATE OF 3 - 7/8" Ø STUDS FOR 4 - 3/4" Ø STUDS, AND STUD SPACING CHANGES SHALL BE MADE AS NECESSARY TO PROVIDE THE SAME EQUIVALENT NUMBER OF 7/8" Ø STUDS ALONG THE BEAM AS SHOWN FOR 3/4" Ø STUDS BASED ON THE RATIO OF 3 - 7/8" Ø STUDS FOR 4 - 3/4" Ø STUDS. STUDS OF THE LENGTH SPECIFIED ON THE PLANS MUST BE PROVIDED. THE MAXIMUM SPACING SHALL BE 2'-0".

EXCEPT AT THE INTERIOR SUPPORTS OF CONTINUOUS BEAMS WHERE THE COVER PLATE IS IN CONTACT WITH BEARING PLATE, THE CONTRACTOR MAY, AT HIS OPTION, SUBSTITUTE FOR THE COVER PLATES DESIGNATED ON THE PLANS COVER PLATES OF THE EQUIVALENT AREA PROVIDED THESE PLATES ARE AT LEAST 5/16" IN THICKNESS AND DO NOT EXCEED A WIDTH EQUAL TO THE FLANGE WIDTH LESS 2" OR A THICKNESS EQUAL TO 2 TIMES THE FLANGE THICKNESS. THE SIZE OF FILLET WELDS SHALL CONFORM TO THE REQUIREMENTS OF THE CURRENT ANSI/AASHTO/AWS "BRIDGE WELDING CODE". ELECTROSLAG WELDING WILL NOT BE PERMITTED.

WITH THE SOLE EXCEPTION OF EDGES AT SURFACES WHICH BEAR ON OTHER SURFACES, ALL SHARP EDGES AND ENDS OF SHAPES AND PLATES SHALL BE SLIGHTLY ROUNDED BY SUITABLE MEANS TO A RADIUS OF APPROXIMATELY 1/16 INCH OR EQUIVALENT FLAT SURFACE AT A SUITABLE ANGLE PRIOR TO PAINTING, GALVANIZING, OR METALLIZING.

HANDRAILS AND POSTS:

METAL STANDARDS AND FACES OF THE CONCRETE END POSTS FOR THE METAL RAIL SHALL BE SET NORMAL TO THE GRADE OF THE CURB, UNLESS OTHERWISE SHOWN ON PLANS. THE METAL RAIL AND TOPS OF CONCRETE POSTS USED WITH THE ALUMINUM RAIL SHALL BE BUILT PARALLEL TO THE GRADE OF THE CURB.

METAL HANDRAILS SHALL BE IN ACCORDANCE WITH THE PLANS. RAILS SHALL BE AS MANUFACTURED FOR BRIDGE RAILING. CASTINGS SHALL BE OF A UNIFORM APPEARANCE. FINS AND OTHER DEFORMATIONS RESULTING FROM CASTING OR OTHERWISE SHALL BE REMOVED IN A MANNER SO THAT A UNIFORM COLORING OF THE COMPLETED CASTING SHALL BE OBTAINED. CASTINGS WITH DISCOLORATIONS OR OF NON-UNIFORM COLORING WILL NOT BE ACCEPTED. CERTIFIED MILL REPORTS ARE REQUIRED FOR METAL RAILS AND POSTS.

SPECIAL NOTES:

GENERALLY, IN CASE OF DISCREPANCY, THIS STANDARD SHEET OF NOTES SHALL GOVERN OVER THE SPECIFICATIONS, BUT THE REMAINDER OF THE PLANS SHALL GOVERN OVER NOTES HEREON, AND SPECIAL PROVISIONS SHALL GOVERN OVER ALL. SEE SPECIFICATIONS ARTICLE 105-4.

ENGLISH

JANUARY, 1990