09/08/99

TIP PROJECT: 17BP.14.R.29

CONTRACT: DN00162

STATE	STATE PROJECT REFERENCE NO.	SHEET NO.	TOTAL SHEETS
N.C.	17BP.14.R.29	1	

STATE PROJ. NO.	F.A. PROJ. NO.	DESCRIPTION
17BP.14.R.29		PE, R/W, UTIL
17BP.14.R.29		CONST

STATE OF NORTH CAROLINA
DIVISION OF HIGHWAYS

MACON COUNTY

LOCATION: BRIDGE 243 (POPLAR COVE CREEK) ON SR 1306 (SMITH HILL ROAD)

TYPE OF WORK: GRADING, PAVING, DRAINAGE & STRUCTURE

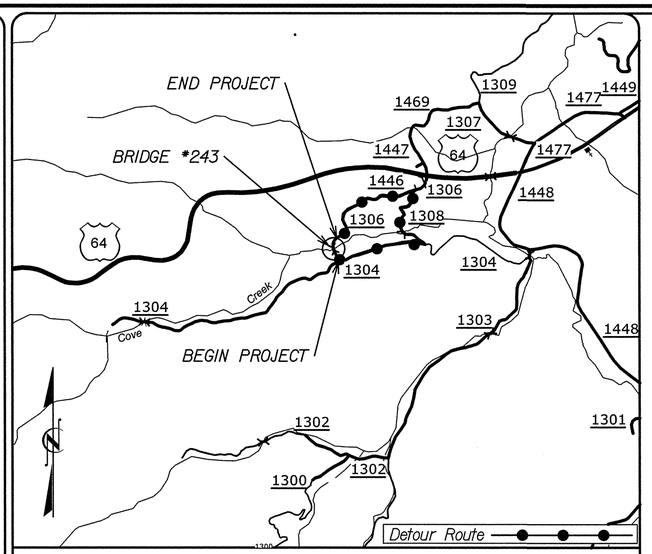

VICINITY MAP

See Sheet 1-A For Index of Sheets
See Sheet 1-B For Conventional Symbols

STA. 10+45.85 –L– BEGIN TIP PROJECT 17BP.14.R.29

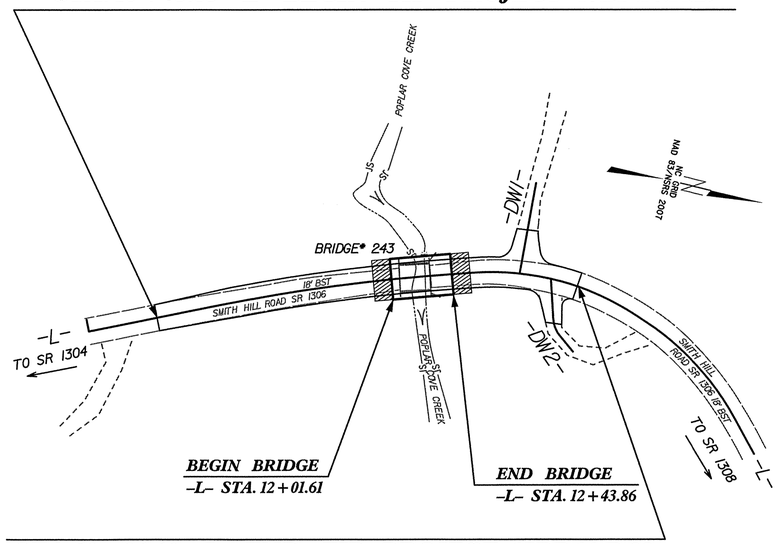

STA. 13+26.60 –L– END TIP PROJECT 17BP.14.R.29

GRAPHIC SCALES

50 25 0 50 100
PLANS

50 25 0 50 100
PROFILE (HORIZONTAL)

10 5 0 10 20
PROFILE (VERTICAL)

DESIGN DATA

ADT (2009)= 250

V = 25 MPH

FUNC CLASS =
LOCAL
SUB-REGIONAL TIER

PROJECT LENGTH

LENGTH ROADWAY TIP PROJECT 17BP.14.R.29	=	*0.045 MI*
LENGTH STRUCTURE TIP PROJECT 17BP.14.R.29	=	*0.008 MI*
TOTAL LENGTH TIP PROJECT 17BP.14.R.29	=	*0.053 MI*

NCDOT CONTACT: JOSHUA DEYTON, P.E.
PROJECT ENGINEER

Prepared In the Office of:
Mattern & Craig
CONSULTING ENGINEERS - SURVEYORS
12 BROAD STREET
ASHEVILLE, NORTH CAROLINA 28801
(828) 254-2201 - FAX (828) 254-4562

2012 STANDARD SPECIFICATIONS

RIGHT OF WAY DATE:
AUGUST 1, 2013

LETTING DATE:
FEBRUARY, 2014

JAMES B. VOSO, P.E.
PROJECT ENGINEER

DANA BOLDEN, P.E.
PROJECT DESIGN ENGINEER

HYDRAULICS ENGINEER

NORTH CAROLINA PROFESSIONAL SEAL 026945 ENGINEER DANA J. BOLDEN

SIGNATURE:

ROADWAY DESIGN ENGINEER

NORTH CAROLINA PROFESSIONAL SEAL 022029 ENGINEER JAMES B. VOSO

SIGNATURE:

DIVISION OF HIGHWAYS STATE OF NORTH CAROLINA

STATE OF NORTH CAROLINA DEPARTMENT OF TRANSPORTATION

P.E.
STATE HIGHWAY DESIGN ENGINEER

9:59:21 AM
R:\3215\Bridge243\Roadway\Proj\17BP14R29_RDY_TSH.dgn
bgross

PROJECT REFERENCE NO.	SHEET NO.
17BP14.R.29	1-A

ROADWAY DESIGN ENGINEER

PAVEMENT DESIGN ENGINEER

Prepared in the Office of:
Mattern & Craig
CONSULTING ENGINEERS - SURVEYORS
12 BROAD STREET
ASHEVILLE, NORTH CAROLINA 28801
(828) 254-2201 - FAX (828) 254-4562

INDEX OF SHEETS – GENERAL NOTES – LIST OF STANDARDS

INDEX OF SHEETS

SHEET NUMBER	SHEET
1	Title Sheet
1–A	Index of Sheets, General Notes, and List of Standards
1–B	Conventional Symbols
1–C	Survey Control Sheets
2	Typical Sections, Pavement Schedule, and Wedging Detail
3	Summary of Quantities
3–A	Summary of Drainage Quantities, Summary of Guardrail, and Earthwork Summary
4	Plan Sheet
5	Profile Sheet
TMP–1 THRU TMP–2	Transportation Management Plans
PMP–01	Pavement Marking Plans
EC–1 THRU RF–2	Erosion Control Plans
UBO–1	Utilities By Others Plans
X–1A	Cross–Section Summary Sheet
X–1	Cross–Sections
TS–01	Structure Plans Title Sheet
S–01 THRU S–13	Structure Plans
SN	Structure Plans – Standard Notes Sheet

2012 ROADWAY ENGLISH STANDARD DRAWINGS

The following Roadway Standards as appear in "Roadway Standard Drawings" Highway Design Branch – N. C. Department of Transportation – Raleigh, N. C., Dated January, 2012 are applicable to this project and by reference hereby are considered a part of these plans:

STD.NO.	TITLE
DIVISION	2 – EARTHWORK
200.02	Method of Clearing – Method II
225.02	Guide for Grading Subgrade – Secondary and Local
225.04	Method of Obtaining Superelevation – Two Lane Pavement
DIVISION	4 – MAJOR STRUCTURES
422.11	Reinforced Bridge Approach Fills – Sub Regional Tier
DIVISION	5 – SUBGRADE, BASES AND SHOULDERS
560.01	Method of Shoulder Construction – High Side of Superelevated Curve – Method I
DIVISION	8 – INCIDENTALS
815.03	Pipe Underdrain and Blind Drain
862.01	Guardrail Placement
862.02	Guardrail Installation
862.03	Structure Anchor Units

GENERAL NOTES: 2012 SPECIFICATIONS

EFFECTIVE: 01–17–12
REVISED: 07/30/12

GRADE LINE:
GRADING AND SURFACING:

THE GRADE LINES SHOWN DENOTE THE FINISHED ELEVATION OF THE PROPOSED SURFACING AT GRADE POINTS SHOWN ON THE TYPICAL SECTIONS. GRADE LINES MAY BE ADJUSTED AT THEIR BEGINNING AND ENDING AND AT STRUCTURES AS DIRECTED BY THE ENGINEER IN ORDER TO SECURE A PROPER TIE–IN.

CLEARING:

CLEARING ON THIS PROJECT SHALL BE PERFORMED TO THE LIMITS ESTABLISHED BY METHOD II.

SUPERELEVATION:

ALL CURVES ON THIS PROJECT SHALL BE SUPERELEVATED IN ACCORDANCE WITH STD. NO. 225.04 USING THE RATE OF SUPERELEVATION AND RUNOFF SHOWN ON THE PLANS. SUPERELEVATION IS TO BE REVOLVED ABOUT THE GRADE POINTS SHOWN ON THE TYPICAL SECTIONS.

SHOULDER CONSTRUCTION:

ASPHALT, EARTH, AND CONCRETE SHOULDER CONSTRUCTION ON THE HIGH SIDE OF SUPERELEVATED CURVES SHALL BE IN ACCORDANCE WITH STD. NO. 560.01.

SIDE ROADS:

THE CONTRACTOR WILL BE REQUIRED TO DO ALL NECESSARY WORK TO PROVIDE SUITABLE CONNECTIONS WITH ALL ROADS, STREETS, AND DRIVES ENTERING THIS PROJECT. THIS WORK WILL BE PAID FOR AT THE CONTRACT UNIT PRICE FOR THE PARTICULAR ITEMS INVOLVED.

GUARDRAIL:

THE GUARDRAIL LOCATIONS SHOWN ON THE PLANS MAY BE ADJUSTED DURING CONSTRUCTION AS DIRECTED BY THE ENGINEER. THE CONTRACTOR SHOULD CONSULT WITH THE ENGINEER PRIOR TO ORDERING GUARDRAIL MATERIAL.

TEMPORARY SHORING:

SHORING REQUIRED FOR THE MAINTENANCE OF TRAFFIC WILL BE PAID FOR AS "EXTRA WORK" IN ACCORDANCE WITH SECTION 104–7.

SUBSURFACE PLANS:

SUBSURFACE PLANS ARE AVAILABLE FOR THE STRUCTURE ONLY. THE CONTRACTOR SHOULD MAKE HIS OWN INVESTIGATION AS TO THE OTHER SUBSURFACE CONDITIONS.

END BENTS:

THE ENGINEER SHALL CHECK THE STRUCTURE END BENT PLANS, DETAILS, AND CROSS–SECTION PRIOR TO SETTING OF THE SLOPE STAKES FOR THE EMBANKMENT OR EXCAVATION APPROACHING A BRIDGE.

UTILITIES:

UTILITY OWNERS ON THIS PROJECT ARE DUKE ENERGY AND FRONTIER COMMUNICATION. ANY RELOCATION OF EXISTING UTILITIES WILL BE ACCOMPLISHED BY OTHERS.

RIGHT–OF–WAY MARKERS:

ALL RIGHT–OF–WAY MARKERS ON THIS PROJECT SHALL BE PLACED BY CONTRACT IN ACCORDANCE WITH SECTION 801 OF THE 2012 NORTH CAROLINA STANDARD SPECIFICATIONS FOR ROADS AND STRUCTURES.

6/2/99
10:52:55 AM
R:\3215\Bridge243\Roadway\Proj\17BP14R29_RDY_TYP.dgn

PROJECT REFERENCE NO.	SHEET NO.
17BPJ4.R.29	1-B

Note: Not to Scale

****S.U.E. = Subsurface Utility Engineering***

STATE OF NORTH CAROLINA
DIVISION OF HIGHWAYS

CONVENTIONAL PLAN SHEET SYMBOLS

BOUNDARIES AND PROPERTY:

- State Line
- County Line
- Township Line
- City Line
- Reservation Line
- Property Line
- Existing Iron Pin — EIP
- Property Corner
- Property Monument — ECM
- Parcel/Sequence Number — 123
- Existing Fence Line
- Proposed Woven Wire Fence
- Proposed Chain Link Fence
- Proposed Barbed Wire Fence
- Existing Wetland Boundary — WLB
- Proposed Wetland Boundary — WLB
- Existing High Quality Wetland Boundary — HQ WLB
- Existing Endangered Animal Boundary — EAB
- Existing Endangered Plant Boundary — EPB

BUILDINGS AND OTHER CULTURE:

- Gas Pump Vent or U/G Tank Cap
- Sign — S
- Well — W
- Small Mine
- Foundation
- Area Outline
- Cemetery
- Building
- School
- Church
- Dam

HYDROLOGY:

- Stream or Body of Water
- Hydro, Pool or Reservoir
- River Basin Buffer — RBB
- Flow Arrow
- Disappearing Stream
- Spring
- Swamp Marsh
- Proposed Lateral, Tail, Head Ditch — FLOW
- False Sump

RAILROADS:

- Standard Guage — CSX TRANSPORTATION
- RR Signal Milepost — MILEPOST 35
- Switch — SWITCH
- RR Abandoned
- RR Dismantled

RIGHT OF WAY:

- Baseline Control Point
- Existing Right of Way Marker
- Existing Right of Way Line
- Proposed Right of Way Line — RW
- Proposed Right of Way Line with Iron Pin and Cap Marker — RW
- Proposed Right of Way Line with Concrete or Granite Marker — RW
- Existing Control of Access — CA
- Proposed Control of Access — CA
- Existing Easement Line — E
- Proposed Temporary Construction Easement — E
- Proposed Temporary Drainage Easement — TDE
- Proposed Permanent Drainage Easement — PDE
- Proposed Permanent Utility Easement — PUE

ROADS AND RELATED FEATURES:

- Existing Edge of Pavement
- Existing Curb
- Proposed Slope Stakes Cut — C
- Proposed Slope Stakes Fill — F
- Proposed Wheel Chair Ramp — WCR
- Curb Cut for Future Wheel Chair Ramp — CCFR
- Existing Metal Guardrail
- Proposed Guardrail
- Existing Cable Guiderail
- Proposed Cable Guiderail
- Equaility Symbol
- Pavement Removal

VEGETATION:

- Single Tree
- Single Shrub
- Hedge
- Woods Line
- Orchard
- Vineyard — Vineyard

EXISTING STRUCTURES:

MAJOR:

- Bridge, Tunnel or Box Culvert — CONC
- Bridge Wing Wall, Head Wall and End Wall — CONC WW

MINOR:

- Head and End Wall — CONC HW
- Pipe Culvert
- Footbridge
- Drainage Box: Catch Basin, DI or JB — CB
- Paved Ditch Gutter
- Storm Sewer Manhole — S
- Storm Sewer — S

UTILITIES:

POWER:

- Existing Power Pole
- Proposed Power Pole
- Existing Joint Use Pole
- Proposed Joint Use Pole
- Power Manhole — P
- Power Line Tower
- Power Transformer
- U/G Power Cable Hand Hole — HH
- H-Frame Pole
- Recorded U/G Power Line — P
- Designated U/G Power Line (S.U.E.*) — P

TELEPHONE:

- Existing Telephone Pole
- Proposed Telephone Pole
- Telephone Manhole — T
- Telephone Booth
- Telephone Pedestal — T
- Telephone Cell Tower
- U/G Telephone Cable Hand Hole — HH
- Recorded U/G Telephone Cable — T
- Designated U/G Telephone Cable (S.U.E.*) — T
- Recorded U/G Telephone Conduit — TC
- Designated U/G Telephone Conduit (S.U.E.*) — TC
- Recorded U/G Fiber Optics Cable — T FO
- Designated U/G Fiber Optics Cable (S.U.E.*) — T FO

WATER:

- Water Manhole — W
- Water Meter
- Water Valve
- Water Hydrant
- Recorded U/G Water Line — W
- Designated U/G Water Line (S.U.E.*) — W
- Above Ground Water Line — A/G Water

TV:

- TV Satellite Dish
- TV Pedestal — C
- TV Tower
- U/G TV Cable Hand Hole — HH
- Recorded U/G TV Cable — TV
- Designated U/G TV Cable (S.U.E.*) — TV
- Recorded U/G Fiber Optic Cable — TV FO
- Designated U/G Fiber Optic Cable (S.U.E.*) — TV FO

GAS:

- Gas Valve
- Gas Meter
- Recorded U/G Gas Line — G
- Designated U/G Gas Line (S.U.E.*) — G
- Above Ground Gas Line — A/G Gas

SANITARY SEWER:

- Sanitary Sewer Manhole
- Sanitary Sewer Cleanout
- U/G Sanitary Sewer Line — SS
- Above Ground Sanitary Sewer — A/G Sanitary Sewer
- Recorded SS Forced Main Line — FSS
- Designated SS Forced Main Line (S.U.E.*) — FSS

MISCELLANEOUS:

- Utility Pole
- Utility Pole with Base
- Utility Located Object
- Utility Traffic Signal Box — S
- Utility Unknown U/G Line — ?UTL
- U/G Tank; Water, Gas, Oil
- A/G Tank; Water, Gas, Oil
- U/G Test Hole (S.U.E.*)
- Abandoned According to Utility Records — AATUR
- End of Information — E.O.I.

PROJECT REFERENCE NO.	SHEET NO.
17BP.14.R.29	1-C
R/W SHEET NO.	

Prepared in the Office of:
Mattern & Craig
CONSULTING ENGINEERS - SURVEYORS
12 BROAD STREET
ASHEVILLE, NORTH CAROLINA 28801
(828) 254-2201 - FAX (828) 254-4562

SURVEY CONTROL SHEET 17BP.14.R.29

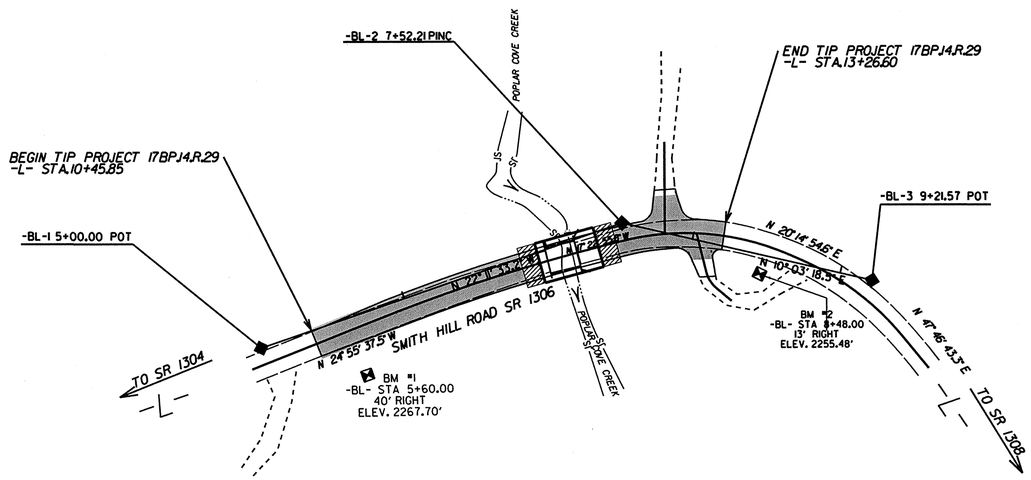

NC GRID
NAD 83/NSRS 2007

DATUM DESCRIPTION

THE LOCALIZED COORDINATE SYSTEM DEVELOPED FOR THIS PROJECT IS BASED ON THE STATE PLANE COORDINATES ESTABLISHED BY NCGS FOR MONUMENT "55-0243-BL-2"
WITH NAD 83/NSRS 2007 STATE PLANE GRID COORDINATES OF
NORTHING: 533651.0790(ft) EASTING: 654513.3940(ft)
ELEVATION: 2257.39(ft)
THE AVERAGE COMBINED GRID FACTOR USED ON THIS PROJECT (GROUND TO GRID) IS: 0.9997708195
THE N.C. LAMBERT GRID BEARING AND LOCALIZED HORIZONTAL GROUND DISTANCE FROM "55-0243-BL-2" TO -L- STATION 10+00 IS
S24°41'25"E 262.6904
ALL LINEAR DIMENSIONS ARE LOCALIZED HORIZONTAL DISTANCES
VERTICAL DATUM USED IS NAVD 88

BL

POINT	DESC.	NORTH	EAST	ELEVATION	EL STATION	OFFSET
1	BL-1	533417.5550	654608.6580	2273.61	10+10.77	10.95 LT
2	BL-2	533651.0790	654513.3940	2257.39	12+61.50	11.67 LT
3	BL-3	533817.8391	654542.9638	2254.52	14+25.75	12.49 LT

BM1 ELEVATION = 2267.70
N 533489 E 654623
BL STATION 5+60.00 40 RIGHT
8" SPIKE SET IN BASE OF 40 INCH PINE TREE

BM2 ELEVATION = 2254.48
N 533744 E 654543
BL STATION 8+48.00 13 RIGHT
8" SPIKE SET IN BASE OF 12 INCH PINE TREE

Scale 1" = 50'
50' 0 50' 100'

STRUCTURE: 55-0243
COUNTY: MACON

5/14/99

\3215\Bridge\243\Roadway\Proj\17BP14R29_LS_PSH.dgn
4:33:01 PM

6/2/99

PROJECT REFERENCE NO.	SHEET NO.
17BP.14.R.29	2

ROADWAY DESIGN ENGINEER

PAVEMENT DESIGN ENGINEER

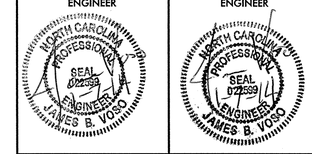

PLANS PREPARED BY:

Mattern & Craig
CONSULTING ENGINEERS - SURVEYORS
12 BROAD STREET
ASHEVILLE, NORTH CAROLINA 28801
(828) 254-2201 - FAX (828) 254-4562

PAVEMENT SCHEDULE

ITEM	DESCRIPTION	ITEM	DESCRIPTION
C1	PROP. APPROX. 3" ASPHALT CONCRETE SURFACE COURSE, TYPE S9.5B, AT AN AVERAGE RATE OF 168 LBS. PER SQ. YD. IN EACH OF 2 LAYERS.	E2	PROP. VAR. DEPTH ASPHALT CONCRETE BASE COURSE, TYPE B25.0B, AT AN AVERAGE RATE OF 114 LBS. PER SQ. YD. PER 1" DEPTH TO BE PLACED IN LAYERS NOT LESS THAN 3" IN DEPTH OR GREATER THAN 5½" IN DEPTH.
C2	PROP. APPROX. 3¾" ASPHALT CONCRETE SURFACE COURSE, TYPE S9.5B, AT AN AVERAGE RATE OF 210 LBS. PER SQ. YD. IN EACH OF 2 LAYERS.	T	EARTH MATERIAL.
C3	PROP. VARIABLE DEPTH S9.5B ASPHALT CONCRETE SURFACE COURSE, AT AN AVERAGE RATE OF 112 LBS PER SY. YD. AT 1" DEPTH. TO BE PLACED IN LAYERS NOT TO EXCEED 2" IN DEPTH.	U	EXISTING PAVEMENT.
E1	PROP. APPROX. 5" ASPHALT CONCRETE BASE COURSE, TYPE B25.0B, AT AN AVERAGE RATE OF 570 LBS. PER SQ. YD.	W	WEDGING (SEE DETAIL 1 THIS SHEET).
J1	PROP. 8" AGGREGATE BASE COURSE		

NOTE: ALL PAVEMENT EDGE SLOPES ARE TO BE 1:1

Detail 1 Showing Method of Wedging

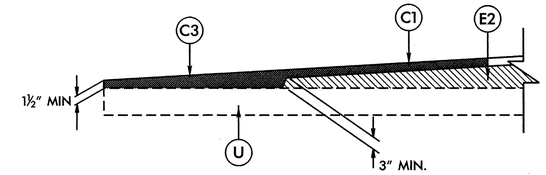

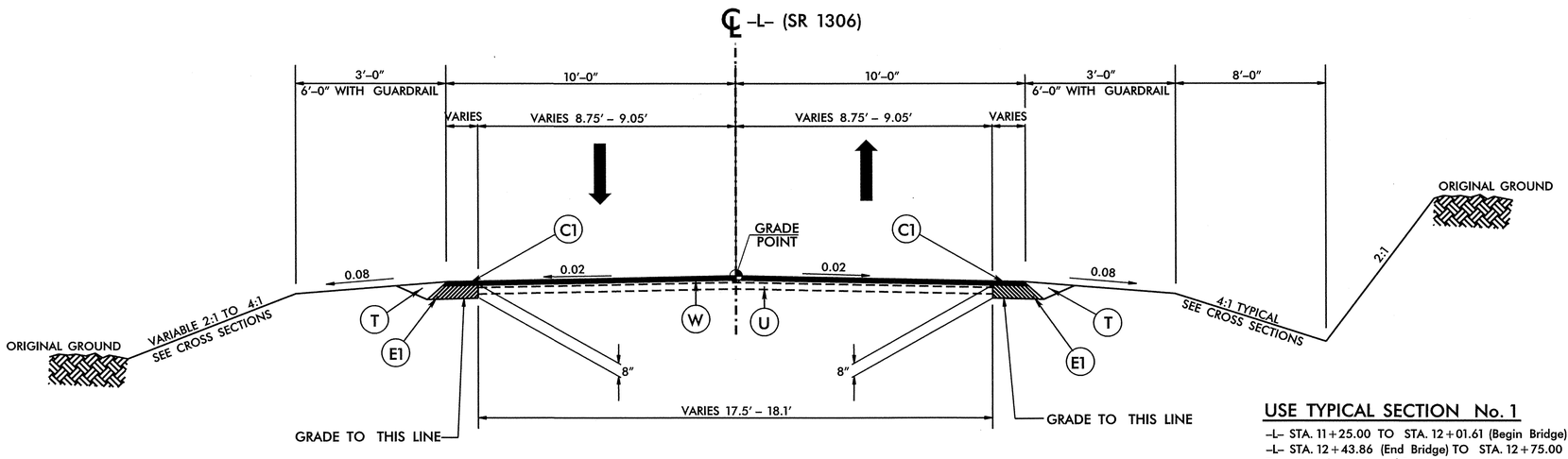

TYPICAL SECTION NO. 1

USE TYPICAL SECTION No. 1

-L- STA. 11+25.00 TO STA. 12+01.61 (Begin Bridge)
-L- STA. 12+43.86 (End Bridge) TO STA. 12+75.00
Transition from Typical Section 1 to existing
from -L- STA. 12+75.00 TO STA. 13+26.60

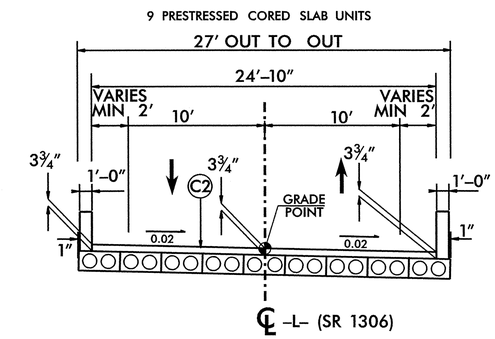

TYPICAL SECTION ON BRIDGE

-L- STA. 12+01.61 (BEGIN BRIDGE) TO 12+43.86 (END BRIDGE)

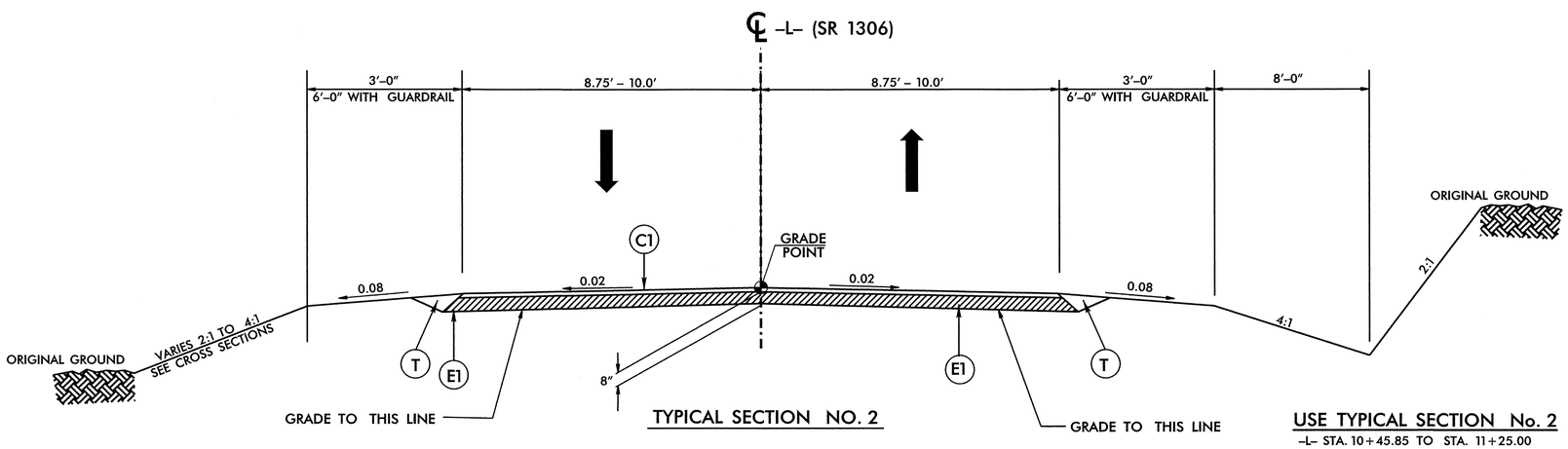

TYPICAL SECTION NO. 2

USE TYPICAL SECTION No. 2

-L- STA. 10+45.85 TO STA. 11+25.00

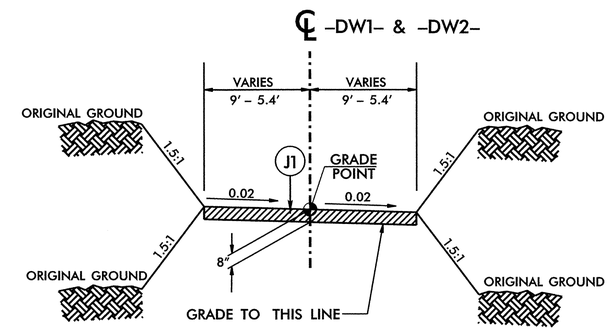

TYPICAL DRIVEWAY SECTION

-DW1- STA. 10+10.00 TO STA. 10+29.00
-DW2- STA. 10+10.00 TO STA. 10+30.00

10:02:23 AM
R:\3215\Bridge240\Roadway\Proj\17BP14R29_RDY_TYP.dgn
Bryan Bazemore 17:29:07 DGN: 8415SS.DGN

SUMMARY OF QUANTITIES

TYPE	ITEM NUMBER	Sec No.	Description	Quantity	Unit
			Roadway		
M	0000100000-N	800	MOBILIZATION	1	LS
M	0000400000-N	801	CONSTRUCTION SURVEYING	1	LS
G	0050000000-E	226	SUPPLEMENTARY CLEARING & GRUBBING	0.25	ACR
G	0043000000-N	226	GRADING	1.00	LS
			CLEARING AND GRUBBING	0.40	ACR
			UNCLASSIFIED EXCAVATION	150.00	CY
			BORROW EXCAVATION	200.00	CY
			REMOVAL OF EXISTING ASPHALT PAVEMENT	300.00	SY
			FINE GRADING	200.00	SY
G	0057000000-E	226	UNDERCUT EXCAVATION	50.00	CY
G	0195000000-E	265	SELECT GRANULAR MATERIAL	50.00	CY
P	1121000000-E	520	AGGREGATE BASE COURSE	35.00	TON
G	1220000000-E	545	INCIDENTAL STONE BASE	50.00	TON
P	1489000000-E	610	ASPHALT CONC BASE COURSE, TYPE B25.0B	150.00	TON
P	1519000000-E	610	ASPHALT CONC SURFACE COURSE, TYPE S9.5B	115.00	TON
P	1575000000-E	620	ASPHALT BINDER FOR PLANT MIX	14.00	TON
GR	3030000000-E	862	STEEL BM GUARDRAIL	37.50	LF
GR	3045000000-E	862	STEEL BM GUARDRAIL, SHOP CURVED	25.00	LF
GR	3150000000-N	862	ADDITIONAL GUARDRAIL POSTS	10.00	EA
GR	3165000000-N	SP	GUARDRAIL ANCHOR UNITS, TYPE 350 (TL-2)	3.00	EA
GR	3215000000-N	862	GUARDRAIL ANCHOR UNITS, TYPE III	4.00	EA
GR	3195000000-N	862	GUARDRAIL ANCHOR UNITS, TYPE AT-1	1.00	EA
G	3642000000-E	876	RIP RAP, CLASS A	135.00	TON
			Erosion Control		
D	3656000000-E	876	GEOTEXTILE FOR DRAINAGE	25.00	SY
L	6000000000-E	1605	TEMPORARY SILT FENCE	335.00	LF
L	6009000000-E	1610	EROSION CONTROL STONE, CLASS B	85.00	TON
L	6012000000-E	1610	SEDIMENT CONTROL STONE	55.00	TON
L	6015000000-E	1615	TEMPORARY MULCHING	0.50	ACR
L	6018000000-E	1620	SEED FOR TEMPORARY SEEDING	50.00	LB
L	6021000000-E	1620	FERTILIZER FOR TEMPORARY SEEDING	0.25	TON
L	6024000000-E	1622	TEMPORARY SLOPE DRAINS	100.00	LF
L	6030000000-E	1630	SILT EXCAVATION	80.00	CY
L	6036000000-E	1631	MATTING FOR EROSION CONTROL:	1500.00	SY
L	6042000000-E	1632	1/4" HARDWARE CLOTH	165.00	LF
L	6071020000-E	SP	POLYACRYLAMIDE (PAM)	15.00	LB
L	6084000000-E	1660	SEEDING AND MULCHING	0.50	ACR
L	6090000000-E	1661	SEED FOR REPAIR SEEDING	50.00	LB
L	6093000000-E	1661	FERTILIZER FOR REPAIR SEEDING	0.25	TON
L	6096000000-E	1662	SEED FOR SUPPLEMENTAL SEEDING	50.00	LB
L	6108000000-E	1665	FERTILIZER TOPDRESSING	0.25	TON
L	6117000000-N	SP	RESPONSE FOR EROSION CONTROL	5.00	EA
L	6123000000-E	1670	REFORESTATION	0.10	ACR
			Traffic Management		
Y	4400000000-E	1110	WORK ZONE SIGNS (STATIONARY)	170.00	SF
Y	4410000000-E	1110	WORK ZONE SIGNS (BARRICADE MOUNTED)	57.00	SF
Y	4445000000-E	1145	BARRICADES (TYPE III)	48.00	LF
			Pavement Marking		
PM	4810000000-E	1205	PAINT PAVEMENT MARKING LINES (4")	2240.00	LF
			Structures		
G	0030000000-N	SP	BRIDGE APPROACH FILL - SUBREGIONAL TIER	1	LS
B	8035000000-N	402	REMOVAL OF EXISTING STRUCTURE AT	1	LS
B	8121000000-N	412	UNCLASSIFIED STRUCTURE EXCAVATION	1	LS
B	8182000000-E	420	CL A CONC (BRG)	37.60	CY
B	8210000000-N	422	BRIDGE APPROACH SLABS	1	LS
B	8217000000-E	425	REINFORCING STEEL (BRIDGE)	4598.00	LBS
B	8364000000-E	450	HP12X53 STL PILES	505.00	LF
B	8391000000-N	450	STL PILE POINTS	10.00	EA
B	8505000000-E	460	VERTICAL CONC BARRIER RAIL	80.25	LF
B	8608000000-E	876	RIP RAP CLASS II (2'-0" THICK)	87.00	TON
B	8622000000-E	876	GEOTEXTILE FOR DRAINAGE	96.00	SY
B	8657000000-N	430	ELASTOMERIC BEARINGS	1	LS
B	8762000000-E	430	3'-0" X 1'-9" PRESTRESSED CONC CORED SLABS	360.00	LF

9/2/99
[55S] PM
[55S] S:\Bridge243\Roadway\Proj\17BP14R29_RDY_TYP.dgn

COMPUTED BY: BGR	DATE:
CHECKED BY: JBV	DATE:

PROJECT REFERENCE NO.	SHEET NO.
17BPJ4.R.29	3-A

STATE OF NORTH CAROLINA
DIVISION OF HIGHWAYS

"N" = DISTANCE FROM EDGE OF LANE TO FACE OF GUARDRAIL.
TOTAL SHOULDER WIDTH = DISTANCE FROM EDGE OF TRAVEL LANE TO SHOULDER BREAK POINT.
FLARE LENGTH = DISTANCE FROM LAST SECTION OF PARALLEL GUARDRAIL TO END OF GUARDRAIL.
W = TOTAL WIDTH OF FLARE FROM BEGINNING OF TAPER TO END OF GUARDRAIL.
G = GATING IMPACT ATTENUATOR TYPE 350
NG = NON-GATING IMPACT ATTENUATOR TYPE 350

GUARDRAIL SUMMARY

SURVEY LINE	BEG. STA.	END STA.	LOCATION	LENGTH			WARRANT POINT		"N" DIST. FROM E.O.L.	TOTAL SHOUL. WIDTH	FLARE LENGTH		W		ANCHORS									IMPACT ATTENUATOR TYPE 350			SINGLE FACED GUARDRAIL	REMOVE EXISTING GUARDRAIL	REMOVE AND STOCKPILE EXISTING GUARDRAIL	REMARKS
				STRAIGHT	SHOP CURVED	DOUBLE FACED	APPROACH END	TRAILING END			APPROACH END	TRAILING END	APPROACH END	TRAILING END	XI MOD	XI	GRAU 350 TYPE TL-2	M-350	TYPE III	CAT-1	VI MOD	BIC	AT-1	EA	G	NG				
-L-	11+52.71	12+02.71	RT	50			BRIDGE	BRIDGE	2.42	6	31.25		0.625				1		1											
-L-	12+42.71	12+92.71	RT	50			BRIDGE	BRIDGE	2.42	6		31.25		0.625			1		1											
-L-	11+52.71	12+02.71	LT	50			BRIDGE	BRIDGE	2.42	6	31.25		0.625				1		1											
-L-	12+42.71	12+80.00	LT	30	20		BRIDGE	BRIDGE	2.42	6		31.25		0.625					1				1							
			TOTAL	180	20																									
			TYPE III - 18.75	-75																										
		DEDUCT ANCHORS	TYPE TL-2 - 25.00	-75																										
			AT-1 - 6.25		-6.25																									
			TOTAL	30	13.75																									
ADDITIONAL GUARDRAIL POSTS = 10			SAY	37.5	25.0												3		4				1							

LIST OF PIPES, ENDWALLS, ETC. (FOR PIPES 48" & UNDER)

STATION / SIZE / THICKNESS OR GAUGE	LOCATION (LT,RT, OR CL)	STRUCTURE NO. FROM	STRUCTURE NO. TO	TOP ELEVATION	INVERT ELEVATION	INVERT ELEVATION	SLOPE CRITICAL	DRAINAGE PIPE (RCP, CSP, CAAP, HDPE, or PVC) 12"	15"	18"	24"	30"	36"	42"	48"	C.S. PIPE (UNLESS NOTED OTHRWISE) 12" .064	15" .064	18" .064	24" .064	24"	30" .079	30"	36" .079	36"	42" .109	42"	48" .109	48"	CLASS III R.C. PIPE (UNLESS OTHERWISE NOTED) 12"	15"	18"	24"	30"	36"	42"	48"	15" SIDE DRAIN PIPE	18" SIDE DRAIN PIPE	24" SIDE DRAIN PIPE	ENDWALLS STD. 838.01, STD. 838.11 OR STD. 838.80 (UNLESS NOTED OTHERWISE) CU. YDS. R.C.P.	C.S.P.	QUANTITIES FOR DRAINAGE STRUCTURES * TOTAL L.F. FOR PAY QUANTITY SHALL BE COL. 'A' + (1.3 X COL.'B') PER EACH (0' THRU 5.0')	LIN. *FT. A 5.0' THRU 10.0'	B 10.0' AND ABOVE	C.B. STD. 840.01 OR STD. 840.02	FRAME, GRATES AND HOOD STANDARD 840.03 TYPE OF GRATE E	F	G		D.I. STD. 840.14 OR STD. 840.15	D.I. FRAME & GRATE STD. 840.16	G.D.I. TYPE "A" STD. 840.17 OR 840.26	G.D.I. TYPE "B" STD. 840.18 OR 840.27	G.D.I. TYPE "D" STD. 840.19 OR 840.28	G.D.I. FRAME WITH GRATE STD. 840.22	G.D.I. FRAME WITH TWO GRATES STD. 840.22	G.D.I. (N.S.) FRAME WITH GRATE STD. 840.24	G.D.I. (N.S.) FRAME WITH TWO GRATES STD. 840.24	J.B. STD. 840.31 OR 840.32								CORR. STEEL ELBOWS NO. & SIZE	CONC. COLLARS CL. "B" C.Y. STD 840.72	CONC. & BRICK PIPE PLUG, C.Y. STD. 840.71	PIPE REMOVAL LIN.FT.	REMARKS

ABBREVIATIONS

- C.B. CATCH BASIN
- N.D.I. NARROW DROP INLET
- D.I. DROP INLET
- G.D.I. GRATED DROP INLET
- G.D.I. (N.S.) GRATED DROP INLET (NARROW SLOT)
- J.B. JUNCTION BOX
- M.H. MANHOLE
- T.B.D.I. TRAFFIC BEARING DROP INLET
- T.B.J.B. TRAFFIC BEARING JUNCTION BOX

Note: Invert elevations are for bid purposes only. Contractor to field verify all existing and proposed elevations

PAVEMENT REMOVAL SUMMARY

SURVEY LINE	STATION	STATION	LOCATION LT/RT/CL	YD^2
-L-	10+45	11+25	CL	160
-L-	11+90	12+10	CL	40
-L-	12+30	12+55	CL	50
			TOTAL:	250
			SAY:	300

Approximate quantities only. Unclassified excavation, borrow excavation, shoulder borrow, fine grading, clearing and grubbing, breaking of existing pavement and removal of existing pavement will be paid for at the lump sum price for "Grading".

SUMMARY OF EARTHWORK
IN CUBIC YARDS

LOCATION		UNCLASSIFIED EXCAVATION	UNDERCUT	EMBT+%	BORROW	WASTE
-L- 10+45.85 TO 10+50		4		0		4
-L- 10+50 TO 11+00		74		8		66
-L- 11+00 TO 11+50		36		33		3
-L- 11+50 TO 12+00		0		93	93	
-L- 12+00 TO 12+50		0		115	115	
-L- 12+50 TO 13+00		0		55	55	
-L- 13+00 TO 13+26.60		0		3	3	
TOTALS		114			266	73
EARTH WASTE TO REPLACE BORROW					73	73
GRAND TOTAL		114			193	
SAY		150			200	
ESTIMATED:						
UNDERCUT EXCAVATION	50					
SELECT GRANULAR MATIERIAL	50					
INCIDENTAL STONE BASE	50					

6/21/00

10:15:18 AM
R:\3215\Bridge243\Roadway\Proj\17BP14R29_RDY_TYP.dgn
bgross

PROJECT REFERENCE NO.	SHEET NO.
17BPJ4.R.29	4
R/W SHEET NO.	

ROADWAY DESIGN ENGINEER: NORTH CAROLINA PROFESSIONAL SEAL 022889 ENGINEER JAMES B. VOSO

HYDRAULICS ENGINEER: NORTH CAROLINA PROFESSIONAL SEAL 028945 ENGINEER DANA J. BOLDEN 1-7-14

Prepared in the Office of: Mattern & Craig
CONSULTING ENGINEERS - SURVEYORS
12 BROAD STREET
ASHEVILLE, NORTH CAROLINA 28801
(828) 254-2201 - FAX (828) 254-4562

30 15 0 30 60
SCALE

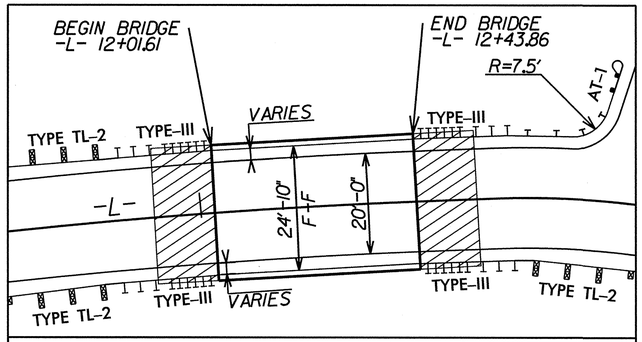

SKETCH SHOWING THE RELATIONSHIP OF THE BRIDGE TO THE PAVEMENT

FOR STRUCTURE PLANS SEE SHEET S1-S13

NAD 83/ NSRS 2007

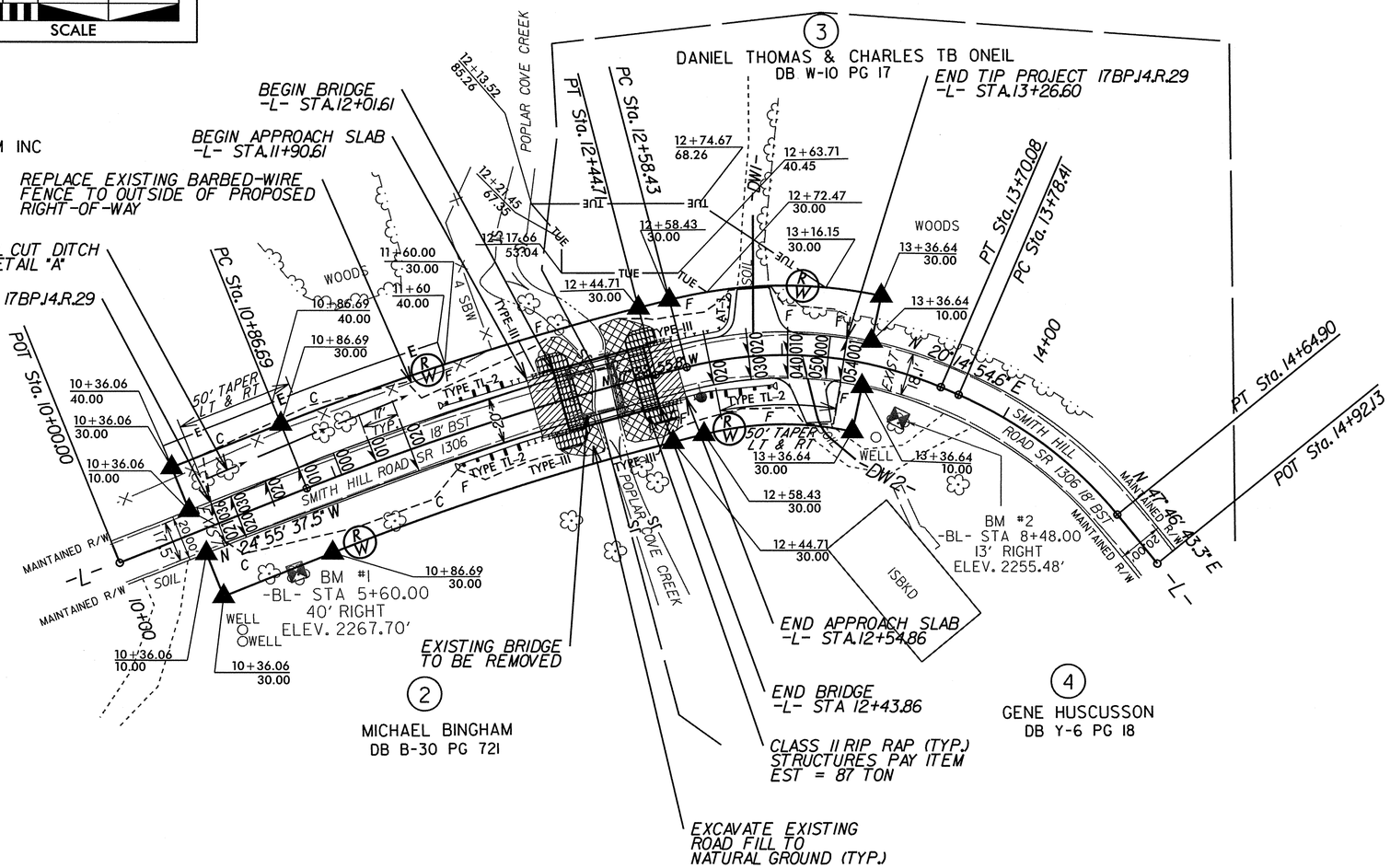

DETAIL A

SPECIAL CUT DITCH
(Not to Scale)

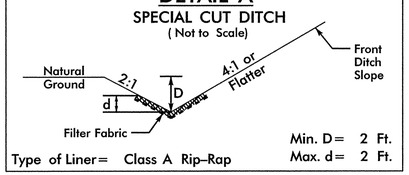

Type of Liner= Class A Rip-Rap
Min. D= 2 Ft.
Max. d= 2 Ft.

FROM -L- STA. 10+45 LT TO STA. 11+50 LT

-L-

PI Sta 11+65.82	PI Sta 13+16.35	PI Sta 14+22.51
Δ = 7° 32' 41.7" (RT)	Δ = 37° 37' 50.4" (RT)	Δ = 27° 31' 48.7" (RT)
D = 4° 46' 28.7"	D = 33° 42' 12.2"	D = 31° 49' 51.6"
L = 158.02'	L = 111.65'	L = 86.49'
T = 79.12'	T = 57.92'	T = 44.10'
R = 1,200.00'	R = 170.00'	R = 180.00'
SE = 0.02	SE = VARIES	
V = 20 MPH	V = 20 MPH	

5/14/99

1:34:19 PM
215\Bridge243\Roadway\Proj\17BPJ4R29_RDY_PSH.dgn
pgross

5/14/99

PROJECT REFERENCE NO.	SHEET NO.
17BP.14.R.29	5

ROADWAY DESIGN ENGINEER

NORTH CAROLINA PROFESSIONAL SEAL 022599 ENGINEER JAMES B. VOSO

HYDRAULICS ENGINEER

NORTH CAROLINA PROFESSIONAL SEAL 028945 ENGINEER DANA J. BOLDEN

Prepared in the Office of:

Mattern & Craig
CONSULTING ENGINEERS - SURVEYORS
12 BROAD STREET
ASHEVILLE, NORTH CAROLINA 28801
(828) 254-2201 - FAX (828) 254-4562

50 25 0 50 100
PROFILE (HORIZONTAL)
10 5 0 10 20
PROFILE (VERTICAL)
SCALE

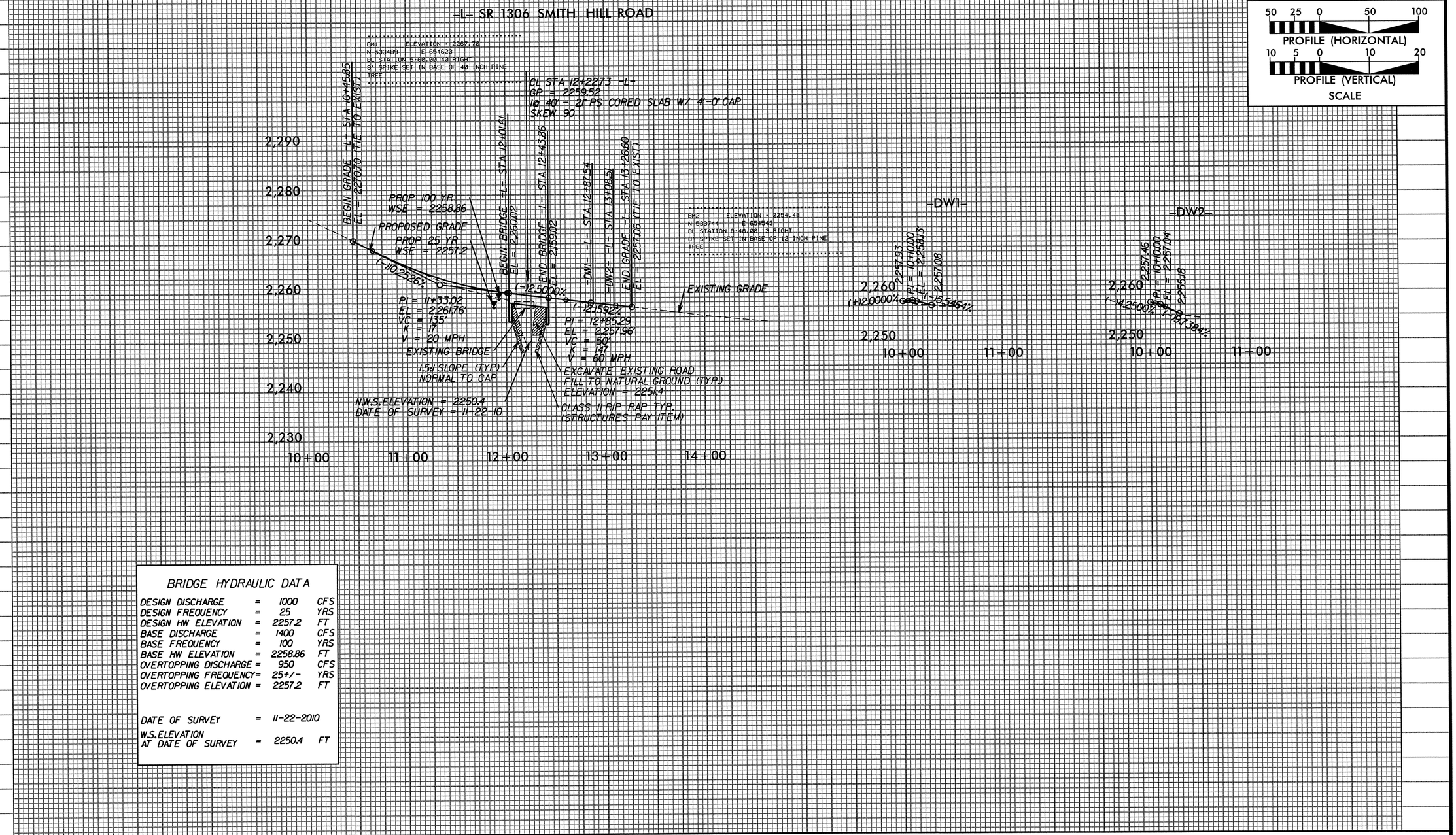

BRIDGE HYDRAULIC DATA

DESIGN DISCHARGE	=	1000	CFS
DESIGN FREQUENCY	=	25	YRS
DESIGN HW ELEVATION	=	2257.2	FT
BASE DISCHARGE	=	1400	CFS
BASE FREQUENCY	=	100	YRS
BASE HW ELEVATION	=	2258.86	FT
OVERTOPPING DISCHARGE	=	950	CFS
OVERTOPPING FREQUENCY	=	25+/-	YRS
OVERTOPPING ELEVATION	=	2257.2	FT
DATE OF SURVEY	=	11-22-2010	
W.S. ELEVATION AT DATE OF SURVEY	=	2250.4	FT

h35600 PM
h41325 S:\Bridge243\Roadway\Proj\17BP14R29_RDY_PSH.dgn
8/10/05

STATE OF NORTH CAROLINA
DIVISION OF HIGHWAYS

TRANSPORTATION MANAGEMENT PLAN

MACON COUNTY

NAD 83/
NSRS 2007

STA. 10+45.85 –L– BEGIN TIP PROJECT 17BP.14.R.29

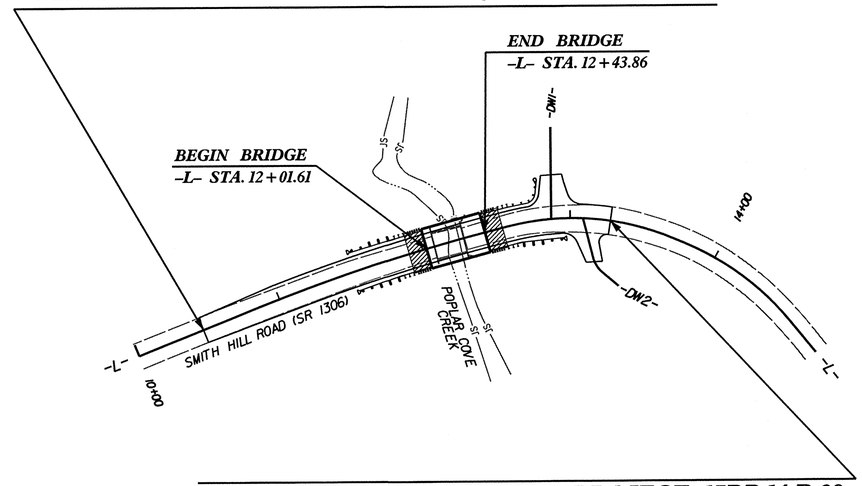

STA. 13+26.60 –L– END TIP PROJECT 17BP.14.R.29

INDEX OF SHEETS

SHEET NO.	TITLE
TMP-1	TITLE SHEET, AND INDEX OF SHEETS
TMP-1A	LIST OF APPLICABLE ROADWAY STANDARD DRAWINGS, LEGEND, AND TEMPORARY PAVEMENT MARKING
TMP-1B	TRANSPORTATION OPERATIONS PLAN: (GENERAL NOTES AND LOCAL NOTES)
TMP-2	TEMPORARY TRAFFIC CONTROL DETOUR
PMP-1	PAVEMENT MARKING PLAN

SHEET NO.
TMP-1

17BP.14.R.29

TIP PROJECT:

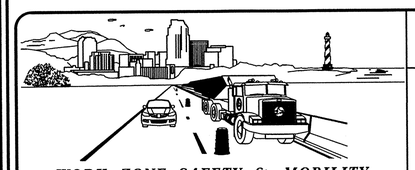

WORK ZONE SAFETY & MOBILITY
"from the MOUNTAINS to the COAST"

N.C.D.O.T. WORK ZONE TRAFFIC CONTROL
1561 MAIL SERVICE CENTER (MSC) RALEIGH, NC 27699-1561
750 N. GREENFIELD PARKWAY, GARNER, NC 27529 (DELIVERY)
PHONE: (919) 773-2800 FAX: (919) 771-2745

J. S. BOURNE, P.E. — *STATE TRAFFIC MANAGEMENT ENGINEER*
JAMES VOSO, P.E. — *TRAFFIC CONTROL PROJECT ENGINEER*
JASON SNAPP, P.E. — *TRAFFIC CONTROL PROJECT DESIGN ENGINEER*
BRIAN ROSS — *TRAFFIC CONTROL DESIGN ENGINEER*

DIVISION OF HIGHWAYS * STATE OF NORTH CAROLINA * DEPARTMENT OF TRANSPORTATION * WORK ZONE TRAFFIC CONTROL

Mattern & Craig
CONSULTING ENGINEERS - SURVEYORS
12 BROAD STREET
ASHEVILLE, NORTH CAROLINA 28801
(828) 254-2201 - FAX (828) 254-4562

APPROVED: _____
DATE: 1-7-14

SEAL

NORTH CAROLINA PROFESSIONAL SEAL 022599 ENGINEER JAMES B. VOSO

h36:35 PM
R:\325\Bridge243\Traffic\TrafficControl\Roadway\17BP14R29_TC_TSH.dgn
bgross

PROJ. REFERENCE NO.	SHEET NO.
17BP.14.R.29	TMP-1A

ROADWAY STANDARD DRAWINGS

THE FOLLOWING ROADWAY STANDARDS AS SHOWN IN "ROADWAY STANDARD DRAWINGS" - PROJECT SERVICES UNIT - N.C. DEPARTMENT OF TRANSPORTATION - RALEIGH, N.C., DATED JANAUARY 2012 ARE APPLICABLE TO THIS PROJECT AND BY REFERENCE HEREBY ARE CONSIDERED A PART OF THESE PLANS:

STD. NO.	TITLE
1101.03	TEMPORARY ROAD CLOSURES
1110.01	STATIONARY WORK ZONE SIGNS
1145.01	BARRICADES
1205.01	PAVEMENT MARKINGS - LINE TYPES AND OFFSETS
1205.02	PAVEMENT MARKINGS - TWO LANE AND MULTILANE ROADWAYS
1205.12	PAVEMENT MARKINGS - BRIDGES
1261.01	GUARDRAIL AND BARRIER DELINEATORS - INSTALLATION SPACING
1261.02	GUARDRAIL AND BARRIER DELINEATORS - TYPES AND MOUNTING
1262.01	GUARDRAIL END DELINEATION

LEGEND

GENERAL

- DIRECTION OF TRAFFIC FLOW
- DIRECTION OF PEDESTRIAN TRAFFIC FLOW
- EXIST. PVMT.
- NORTH ARROW
- PROPOSED PVMT.
- WORK AREA
- REMOVAL
- USER DEFINED (IF NEEDED)
- USER DEFINED (IF NEEDED)

TRAFFIC CONTROL DEVICES

- BARRICADE (TYPE III)
- CONE
- DRUM — SKINNY DRUM — TUBULAR MARKER
- TEMPORARY CRASH CUSHION
- FLASHING ARROW BOARD
- FLAGGER
- LAW ENFORCEMENT
- TRUCK MOUNTED ATTENUATOR (TMA)
- CHANGEABLE MESSAGE SIGN

TEMPORARY SIGNING

- PORTABLE SIGN
- STATIONARY SIGN
- STATIONARY OR PORTABLE SIGN

SIGNALS

- EXISTING
- PROPOSED
- TEMPORARY

PAVEMENT MARKINGS

- EXISTING LINES
- TEMPORARY LINES

PAVEMENT MARKERS

- CRYSTAL/CRYSTAL
- CRYSTAL/RED
- YELLOW/YELLOW

PAVEMENT MARKING SYMBOLS

- PAVEMENT MARKING SYMBOLS

Mattern & Craig
CONSULTING ENGINEERS - SURVEYORS
12 BROAD STREET
ASHEVILLE, NORTH CAROLINA 28801
(828) 254-2201 - FAX (828) 254-4562

APPROVED: DATE: 1-7-14

SEAL

NORTH CAROLINA PROFESSIONAL SEAL 022599 ENGINEER JAMES B. VOSO

DIVISION OF HIGHWAYS STATE OF NORTH CAROLINA DEPARTMENT OF TRANSPORTATION WORK ZONE TRAFFIC CONTROL

ROADWAY STANDARD DRAWINGS & LEGEND

1:37:14 PM
R:\3215\Bridge243\Traffic\TrafficControl\Roadway\17BP14R29_TC_TSH.dgn
bgross

PROJ. REFERENCE NO.	SHEET NO.
17BP.14.R.29	TMP-1B

GENERAL NOTES / LOCAL NOTES

GENERAL NOTES

CHANGES MAY BE REQUIRED WHEN PHYSICAL DIMENSIONS IN THE DETAIL DRAWINGS, STANDARD DETAILS, AND ROADWAY DETAILS ARE NOT ATTAINABLE TO MEET FIELD CONDITIONS OR RESULT IN DUPLICATE OR UNDESIRED OVERLAPPING OF DEVICES, MODIFICATION MAY INCLUDE: MOVING, SUPPLEMENTING, COVERING, OR REMOVAL OF DEVICES AS DIRECTED BY THE ENGINEER

THE FOLLOWING GENERAL NOTES APPLY AT ALL TIMES FOR THE DURATION OF THE CONSTRUCTION PROJECT, EXCEPT WHEN OTHERWISE NOTED IN THE PLAN, OR DIRECTED BY THE ENGINEER.

TRAFFIC PATTERN ALTERATIONS

A. NOTIFY THE ENGINEER TWENTY ONE (21) CALENDAR DAYS PRIOR TO ANY TRAFFIC PATTERN ALTERATION.

SIGNING

B. INSTALL ADVANCE WORK ZONE WARNING SIGNS WHEN WORK IS WITHIN 40 FT FROM THE EDGE OF TRAVEL LANE AND NO MORE THAN THREE (3) DAYS PRIOR TO THE BEGINNING OF CONSTRUCTION.

C. CONTRACTOR TO PROVIDE SIGNING AND DEVICES REQUIRED TO CLOSE THE ROAD ACCORDING TO THE ROADWAY STANDARD DRAWINGS AND TRAFFIC CONTROL PLANS.

CONTRACTOR TO PROVIDE SIGNING REQUIRED FOR THE OFF-SITE DETOUR ROUTE AS SHOWN IN THE TRAFFIC CONTROL PLANS.

D. CONTRACTOR TO COVER OR REMOVE ALL SIGNS AND DEVICES REQUIRED TO CLOSE THE ROAD WHEN ROAD CLOSURE IS NOT IN OPERATION.

CONTRACTOR TO COVER OR REMOVE ALL SIGNS AND DEVICES REQUIRED FOR THE OFF-SITE DETOUR WHEN THE DETOUR IS NOT IN OPERATION.

E. ENSURE ALL NECESSARY SIGNING IS IN PLACE PRIOR TO ALTERING ANY TRAFFIC PATTERN.

TRAFFIC CONTROL DEVICES

F. PLACE TYPE III BARRICADES, WITH "ROAD CLOSED" SIGN R11-2 ATTACHED, OF SUFFICIENT LENGTH TO CLOSE ENTIRE ROADWAY.

PAVEMENT MARKINGS AND MARKERS

G. TIE PROPOSED PAVEMENT MARKING LINES TO EXISTING PAVEMENT MARKING LINES

LOCAL NOTES

CONTRACTOR TO MAINTAIN DRIVEWAY ACCESS AT ALL TIMES.

Mattern & Craig
CONSULTING ENGINEERS - SURVEYORS
12 BROAD STREET
ASHEVILLE, NORTH CAROLINA 28801
(828) 254-2201 - FAX (828) 254-4562

APPROVED: _____ DATE: 1-7-14

SEAL

NORTH CAROLINA PROFESSIONAL SEAL 022599 ENGINEER JAMES B. VOSO

DIVISION OF HIGHWAYS STATE OF NORTH CAROLINA DEPARTMENT OF TRANSPORTATION WORK ZONE TRAFFIC CONTROL

TRANSPORTATION OPERATIONS PLAN

1:37:40 PM
R:\3215\Bridge243\Traffic\TrafficControl\Roadway\17BP14R29_TC_TSH.dgn
bgross

PROJ. REFERENCE NO.	SHEET NO.
17BP.14.R.29	TMP-2

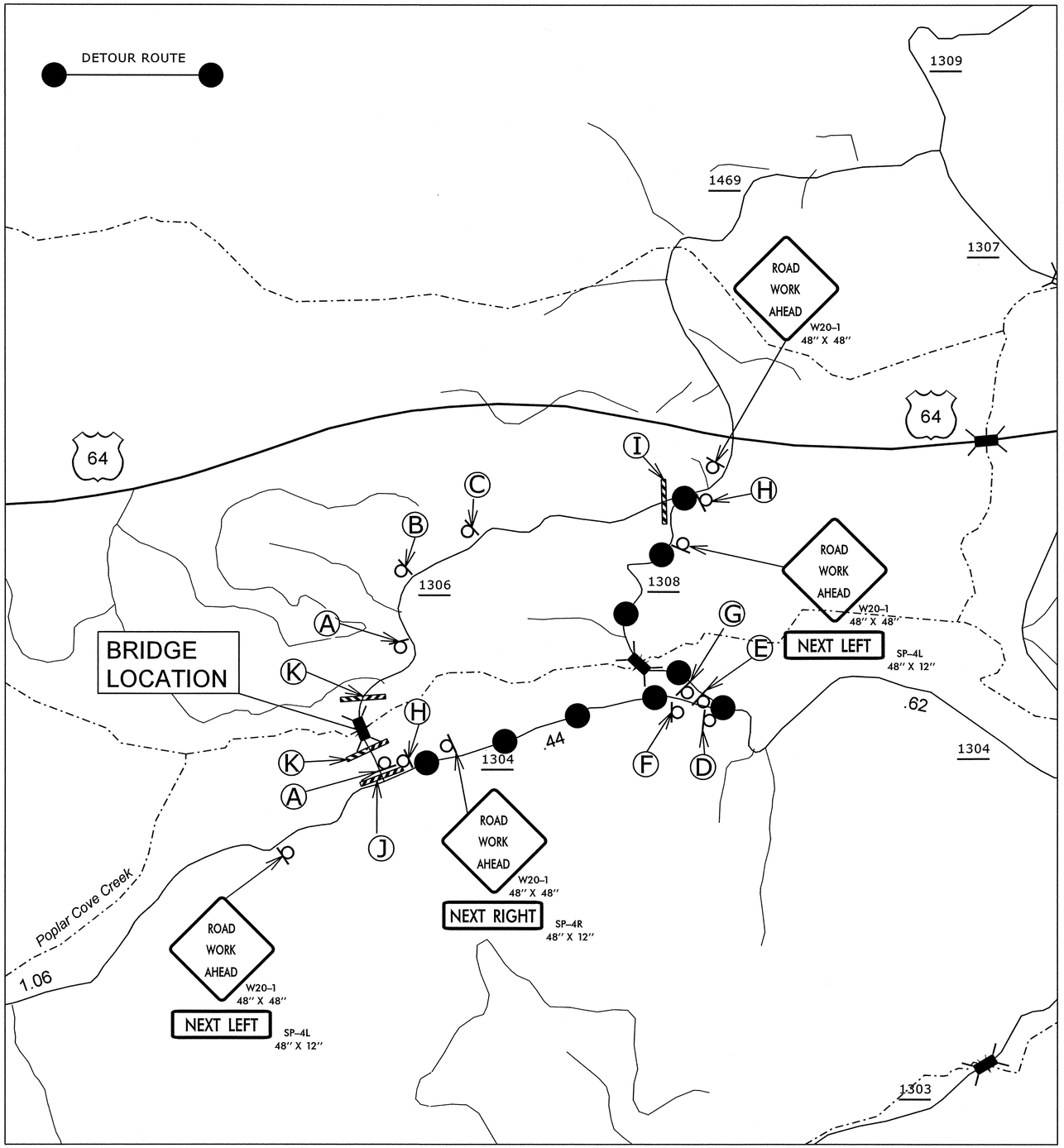

ASSEMBLY A

ASSEMBLY B

ASSEMBLY C

ASSEMBLY D

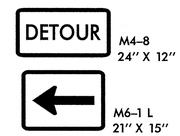

ASSEMBLY E

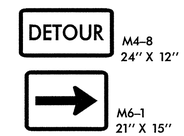

ASSEMBLY F

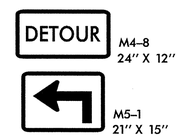

ASSEMBLY G

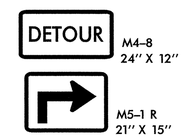

ASSEMBLY H

ASSEMBLY I

R11-3
60" x 30"

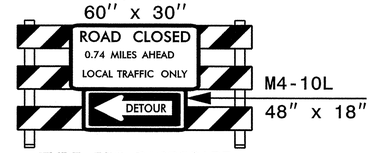

TYPE III BARRICADE

ASSEMBLY J

R11-3
60" x 30"

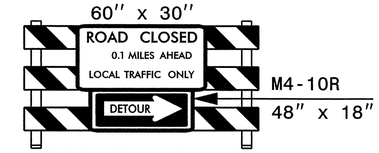

TYPE III BARRICADE

ASSEMBLY K

R11-2
48" x 30"

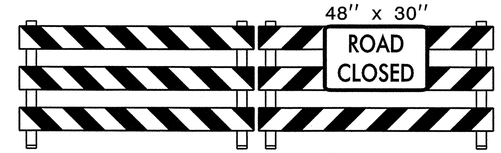

TYPE III BARRICADE(S)

APPROVED: DATE: 1-7-17

SEAL

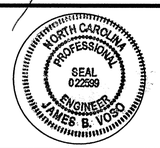

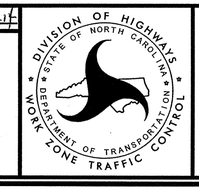

TEMPORARY DETOUR DETAILS

Mattern & Craig
CONSULTING ENGINEERS - SURVEYORS
12 BROAD STREET
ASHEVILLE, NORTH CAROLINA 28801
(828) 254-2201 - FAX (828) 254-4562

2:03:05 PM
R:\3215\Bridge243\Traffic\TrafficControl\Roadway\17BP14R29_TC_DSN.dgn
bgross

PROJ. REFERENCE NO.	SHEET NO.
17BP.14.R.29	PMP-1

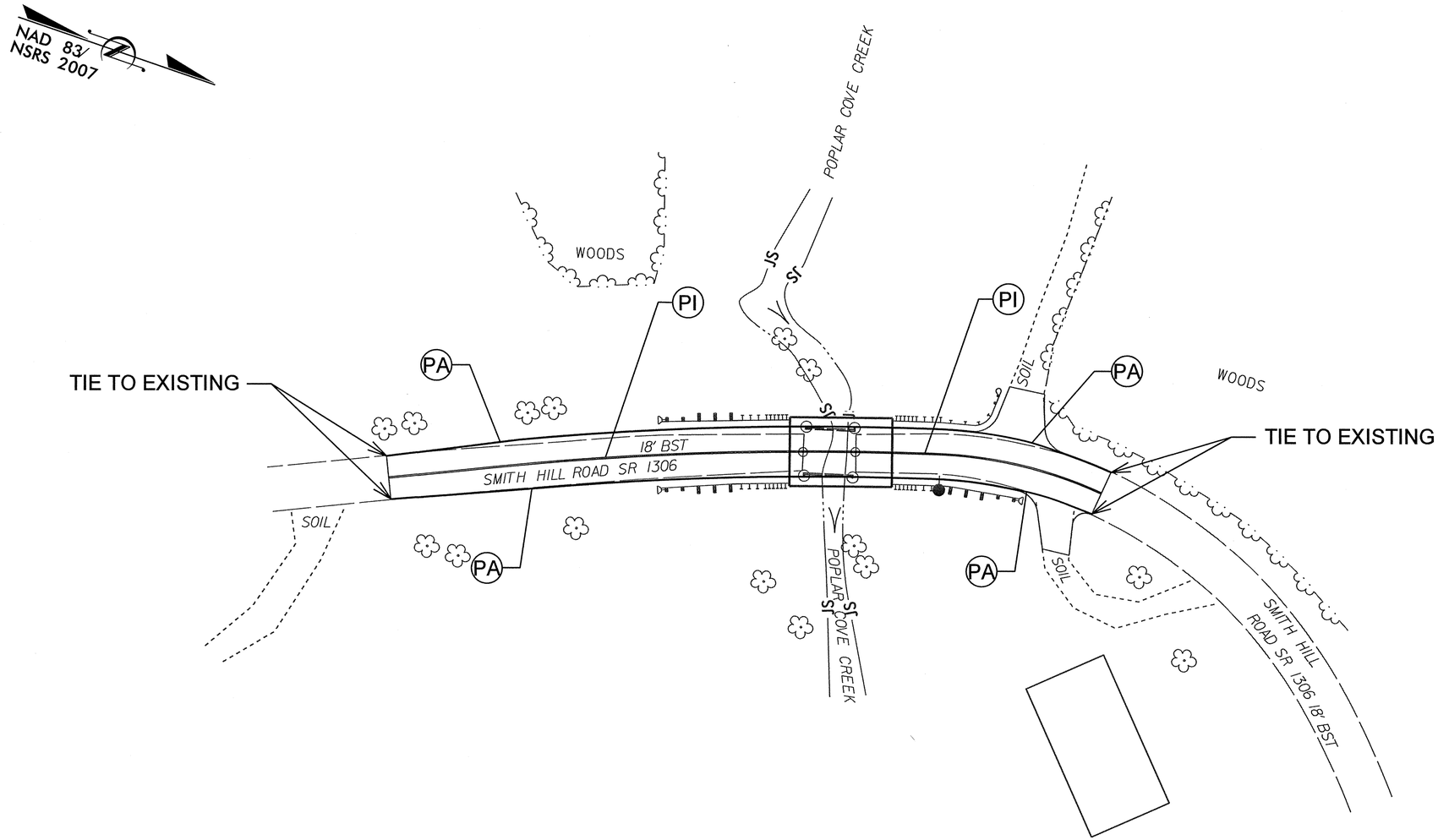

LEGEND

PA WHITE EDGELINE
PI YELLOW DOUBLE CENTER

NOTE: FINAL 4" PAVEMENT MARKING TO RECIEVE DOUBLE COATING.

PROJECT MARKING SCHEDULE
BRIDGE 243

SYMBOL	DESCRIPTION	PAY ITEM	PAY ITEM QUANTITY
PI	YELLOW DOUBLE CENTER	PAINT 4" (DOUBLE COAT)	1,120 LF
PA	WHITE EDGELINE	PAINT 4" (DOUBLE COAT)	1,120 LF

GRAPHIC SCALE
25' 0' 25' 50'
100'
PLANS

Mattern & Craig
SINCE 1978
CONSULTING ENGINEERS - SURVEYORS
12 BROAD STREET
ASHEVILLE, NORTH CAROLINA 28801
(828) 254-2201 - FAX (828) 254-4562

APPROVED: DATE: 1-7-14

NORTH CAROLINA PROFESSIONAL SEAL 022599 ENGINEER JAMES B. VOSO

DIVISION OF HIGHWAYS STATE OF NORTH CAROLINA DEPARTMENT OF TRANSPORTATION WORK ZONE TRAFFIC CONTROL

PAVEMENT MARKING PLAN

2:02:26 PM
R:\3215\Bridge243\Traffic\TrafficControl\Roadway\17BP14R29_TC_PMP.dgn
bgross

PROJECT: 17BP.14.R.29

STATE	STATE PROJECT REFERENCE NO.	SHEET NO.	TOTAL SHEETS
N.C.	17BP.14.R.29	EC-1	

STATE PROJ. NO.	F.A. PROJ. NO.	DESCRIPTION

STATE OF NORTH CAROLINA
DIVISION OF HIGHWAYS

PLAN FOR PROPOSED
HIGHWAY EROSION CONTROL

MACON COUNTY

LOCATION: BRIDGE 243 OVER POPLAR COVE CREEK ON SR 1306 (SMITH HILL ROAD)

TYPE OF WORK: GRADING, DRAINAGE, PAVING, AND STRUCTURE

STA. 10+45.85 –L– BEGIN TIP PROJECT 17BP.14.R.29

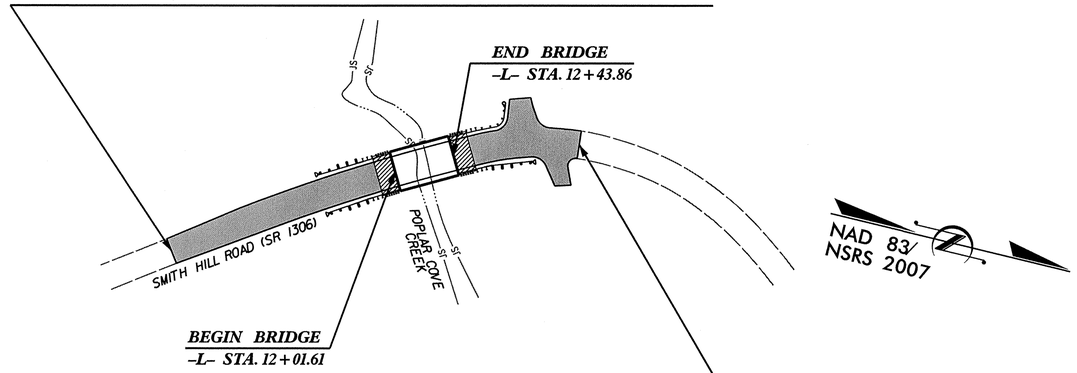

STA. 13+26.60 –L– END TIP PROJECT 17BP.14.R.29

DANA BOLDEN
LEVEL IIIA NAME

3171
LEVEL IIIA CERTIFICATION NO.

CLEARING ON THIS PROJECT SHALL BE PERFORMED TO THE LIMITS ESTABLISHED BY METHOD II

EROSION AND SEDIMENT CONTROL MEASURES

Std. #	Description	Symbol
1630.03	Temporary Silt Ditch	TSD
1630.05	Temporary Diversion	TD
1605.01	Temporary Silt Fence	
1606.01	Special Sediment Control Fence	
1622.01	Temporary Berms and Slope Drains	
1630.02	Silt Basin Type B	
1633.01	Temporary Rock Silt Check Type-A	
	Temporary Rock Silt Check Type-A with Matting and Polyacrylamide (PAM)	
1633.02	Temporary Rock Silt Check Type-B	
	Wattle / Coir Fiber Wattle	SV CFW
	Wattle / Coir Fiber Wattle with Polyacrylamide (PAM)	
1634.01	Temporary Rock Sediment Dam Type-A	
1634.02	Temporary Rock Sediment Dam Type-B	
1635.01	Rock Pipe Inlet Sediment Trap Type-A	
1635.02	Rock Pipe Inlet Sediment Trap Type-B	
1630.04	Stilling Basin	
1630.06	Special Stilling Basin	
	Rock Inlet Sediment Trap:	
1632.01	Type A	A
1632.02	Type B	B
1632.03	Type C	C
	Skimmer Basin	
	Tiered Skimmer Basin	
	Infiltration Basin	

THIS PROJECT CONTAINS EROSION CONTROL PLANS FOR CLEARING AND GRUBBING PHASE OF CONSTRUCTION.

THIS PROJECT HAS BEEN DESIGNED TO SENSITIVE WATERSHED STANDARDS.

ENVIRONMENTALLY SENSITIVE AREA(S) EXIST ON THIS PROJECT

Refer To E. C. Special Provisions for Special Considerations.

GRAPHIC SCALE

0 50
PLANS

0 50
PROFILE (HORIZONTAL)

0 10
PROFILE (VERTICAL)

ROADSIDE ENVIRONMENTAL UNIT
DIVISION OF HIGHWAYS
STATE OF NORTH CAROLINA

THESE EROSION AND SEDIMENT CONTROL PLANS COMPLY WITH THE REGULATIONS SET FORTH BY THE NCG-010000 GENERAL CONSTRUCTION PERMIT EFFECTIVE AUGUST 3, 2011 ISSUED BY THE NORTH CAROLINA DEPARTMENT OF ENVIRONMENT AND NATURAL RESOURCES DIVISION OF WATER QUALITY.

Prepared In the Office of:

Mattern & Craig
CONSULTING ENGINEERS - SURVEYORS
12 BROAD STREET
ASHEVILLE, NORTH CAROLINA 28801
(828) 254-2201 - FAX (828) 254-4562

ROADSIDE ENVIRONMENTAL UNIT

1 South Wilmington St.
Raleigh, NC 27611

2012 STANDARD SPECIFICATIONS

Roadway Standard Drawings

The following roadway english standards as appear in "Roadway Standard Drawings"– Roadway Design Unit – N. C. Department of Transportation – Raleigh, N. C., dated January 2012 and the latest revison thereto are applicable to this project and by reference hereby are considered a part of these plans.

1604.01	Railroad Erosion Control Detail	1632.01	Rock Inlet Sediment Trap Type A
1605.01	Temporary Silt Fence	1632.02	Rock Inlet Sediment Trap Type B
1606.01	Special Sediment Control Fence	1632.03	Rock Inlet Sediment Trap Type C
1607.01	Gravel Construction Entrance	1633.01	Temporary Rock Silt Check Type A
1622.01	Temporary Berms and Slope Drains	1633.02	Temporary Rock Silt Check Type B
1630.01	Riser Basin	1634.01	Temporary Rock Sediment Dam Type A
1630.02	Silt Basin Type B	1634.02	Temporary Rock Sediment Dam Type B
1630.03	Temporary Silt Ditch	1635.01	Rock Pipe Inlet Sediment Trap Type A
1630.04	Stilling Basin	1635.02	Rock Pipe Inlet Sediment Trap Type B
1630.05	Temporary Diversion	1640.01	Coir Fiber Baffle
1630.06	Special Stilling Basin	1645.01	Temporary Stream Crossing
1631.01	Matting Installation		

1/8/2013 4:57:29 PM
J:\2012\12215\Bridge2\Environmental\Design\17BP14R29_EC_TSH.dgn
bgross

PROJECT REFERENCE NO.	SHEET NO.
17BPJ4.R.29	EC-2
R/W SHEET NO.	
ROADWAY DESIGN ENGINEER	HYDRAULICS ENGINEER

TEMPORARY ROCK SILT CHECK TYPE 'A' WITH EXCELSIOR MATTING AND POLYACRYLAMIDE (PAM)

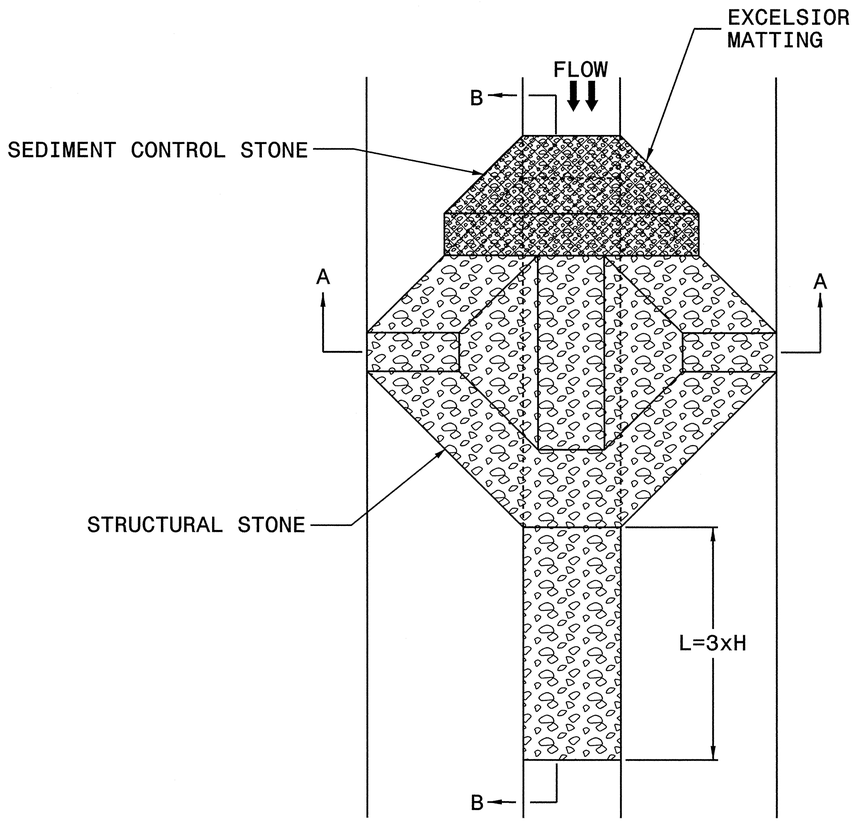

PLAN

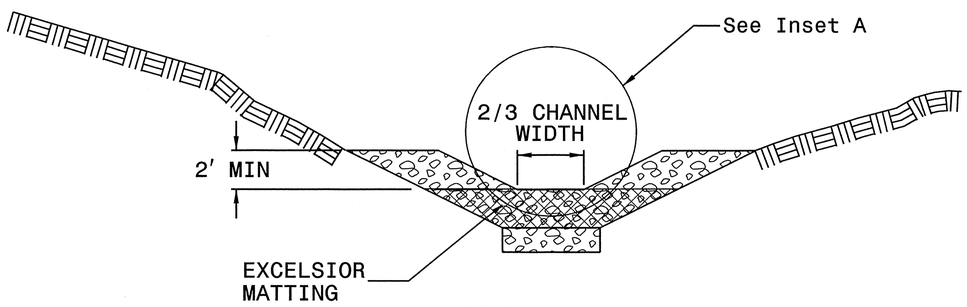

SECTION A-A

NOTES

USE EXCELSIOR FOR MATTING MATERIAL AND ANCHOR MATTING SECTION AT TOP AND BOTTOM WITH CLASS B STONE.

PRIOR TO POLYACRYLAMIDE (PAM) APPLICATION, OBTAIN A SOIL SAMPLE FROM PROJECT LOCATION, AND FROM OFFSITE MATERIAL, AND ANALYZE FOR APPROPRIATE PAM FLOCCULANT TO BE APPLIED TO EACH ROCK SILT CHECK.

INITIALLY APPLY 3.5 OUNCES OF POLYACRYLAMIDE (PAM) TO TOP OF MATTING SECTION AND AFTER EVERY RAINFALL EVENT THAT EQUALS OR EXCEEDS 0.50 INCHES.

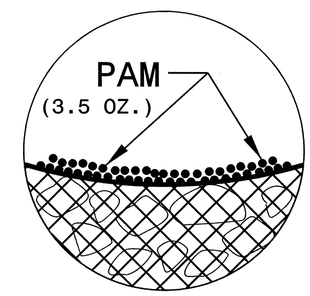

INSET A

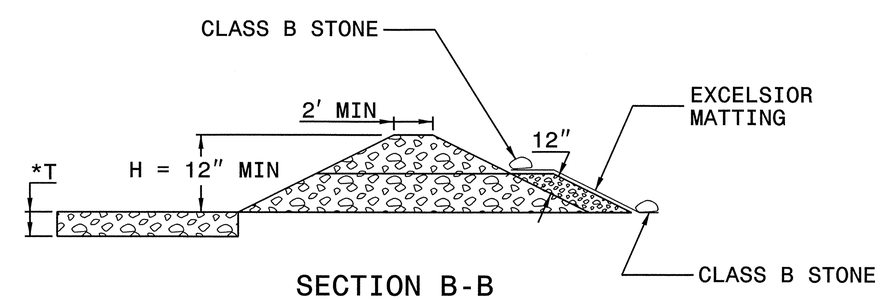

SECTION B-B

*T = 12" MIN., 18" MAX.

NOT TO SCALE

PROJECT REFERENCE NO.	SHEET NO.
17BP.14.R.29	EC-3

ROADWAY DESIGN ENGINEER	HYDRAULICS ENGINEER
NORTH CAROLINA PROFESSIONAL SEAL 022599 ENGINEER JAMES B. VOSO	NORTH CAROLINA PROFESSIONAL SEAL 026945 ENGINEER DINA J. BOLDEN

DIVISION OF HIGHWAYS
STATE OF NORTH CAROLINA

SOIL STABILIZATION TIMEFRAMES

SITE DESCRIPTION	STABILIZATION TIME	TIMEFRAME EXCEPTIONS
PERIMETER DIKES, SWALES, DITCHES AND SLOPES	7 DAYS	NONE
HIGH QUALITY WATER (HQW) ZONES	7 DAYS	NONE
SLOPES STEEPER THAN 3:1	7 DAYS	IF SLOPES ARE 10' OR LESS IN LENGTH AND ARE NOT STEEPER THAN 2:1, 14 DAYS ARE ALLOWED.
SLOPES 3:1 OR FLATTER	14 DAYS	7 DAYS FOR SLOPES GREATER THAN 50' IN LENGTH.
ALL OTHER AREAS WITH SLOPES FLATTER THAN 4:1	14 DAYS	NONE, EXCEPT FOR PERIMETERS AND HQW ZONES.

PROJECT REFERENCE NO.	SHEET NO.
17BPJ4.R.29	EC-3A

ROADWAY DESIGN ENGINEER

HYDRAULICS ENGINEER

DIVISION OF HIGHWAYS
STATE OF NORTH CAROLINA

SOIL STABILIZATION SUMMARY SHEET

MATTING FOR EROSION CONTROL

CONST SHEET NO.	LINE	FROM STATION	TO STATION	SIDE	ESTIMATE (SY)
			SUBTOTAL		0
MISCELLANEOUS MATTING TO BE INSTALLED AS DIRECTED BY THE ENGINEER					1,401
				TOTAL	1,401
				SAY	1,500

PERMANENT SOIL REINFORCEMENT MAT

CONST SHEET NO.	LINE	FROM STATION	TO STATION	SIDE	ESTIMATE (SY)
			SUBTOTAL		0
		ADDITIONAL PSRM TO BE INSTALLED			0
				TOTAL	0
				SAY	0

PROJECT REFERENCE NO.	SHEET NO.
17BP.14.R.29	EC-4/CONST.4
R/W SHEET NO.	
ROADWAY DESIGN ENGINEER	HYDRAULICS ENGINEER

NORTH CAROLINA PROFESSIONAL SEAL 022390 ENGINEER JAMES B. VOSO

NORTH CAROLINA PROFESSIONAL SEAL 028945 ENGINEER DANA J. BOLDEN

CLEARING AND GRUBBING
EROSION CONTROL FOR
CONSTRUCTION SHEET 4

NOTES: ANY DEVIATION FROM OPTIONS GIVEN WILL REQUIRE PRIOR APPROVAL BY ENGINEER.

ADDITIONAL EROSION CONTROL DEVICES MAY NEED TO BE INSTALLED AS DIRECTED BY THE ENGINEER.

IF ANY PUMPED DEWATERING IS REQUIRED, A SPECIAL STILLING BASIN SHALL BE PROVIDED AS NEEDED

NOTE:

PLACE TEMPORARY ROCK SILT CHECKS TYPE – A AT DRAINAGE OUTLETS.

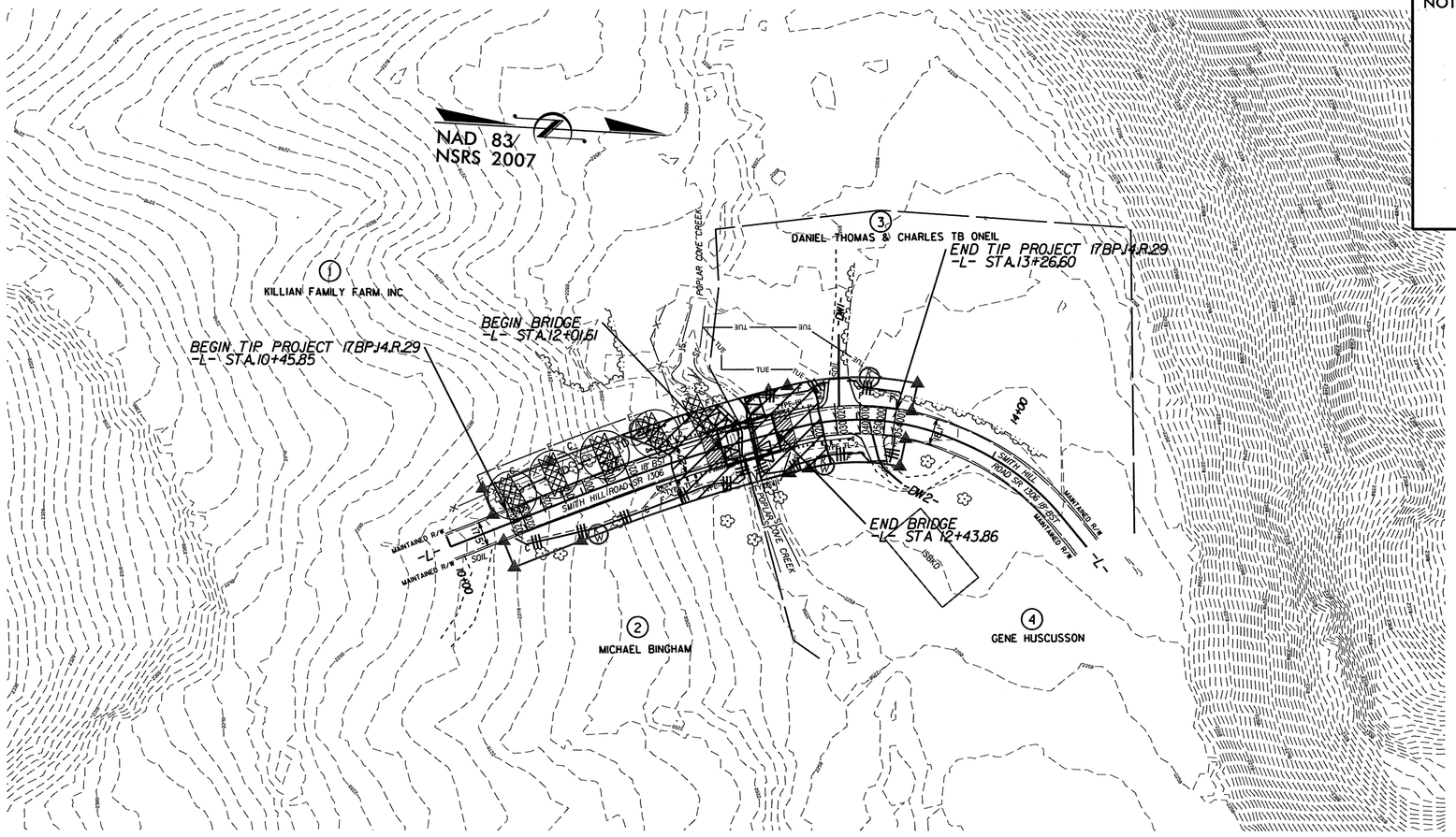

ENVIRONMENTALLY SENSITIVE AREA
SEE PROJECT SPECIAL PROVISIONS

PROJECT REFERENCE NO.	SHEET NO.
17BP.14.R.29	EC-5/CONST.4
R/W SHEET NO.	
ROADWAY DESIGN ENGINEER	HYDRAULICS ENGINEER

NORTH CAROLINA PROFESSIONAL SEAL 022655 ENGINEER JAMES B. VOSS

NORTH CAROLINA PROFESSIONAL SEAL 028945 ENGINEER DANA J. BOLDEN

0.1 ACRE STREAMBANK REFORESTATION

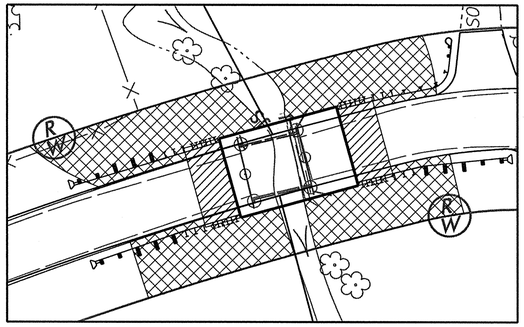

SEE RF-1, RF-2, AND PROJECT SPECIAL PROVISIONS

Place Matting for Erosion Control on Slope as Work Allows.

NOTES: ANY DEVIATION FROM OPTIONS GIVEN WILL REQUIRE PRIOR APPROVAL BY ENGINEER.

ADDITIONAL EROSION CONTROL DEVICES MAY NEED TO BE INSTALLED AS DIRECTED BY THE ENGINEER.

IF ANY PUMPED DEWATERING IS REQUIRED, A SPECIAL STILLING BASIN SHALL BE PROVIDED AS NEEDED

NOTE:

PLACE TEMPORARY ROCK SILT CHECKS TYPE – A AT DRAINAGE OUTLETS.

NAD 83/
NSRS 2007

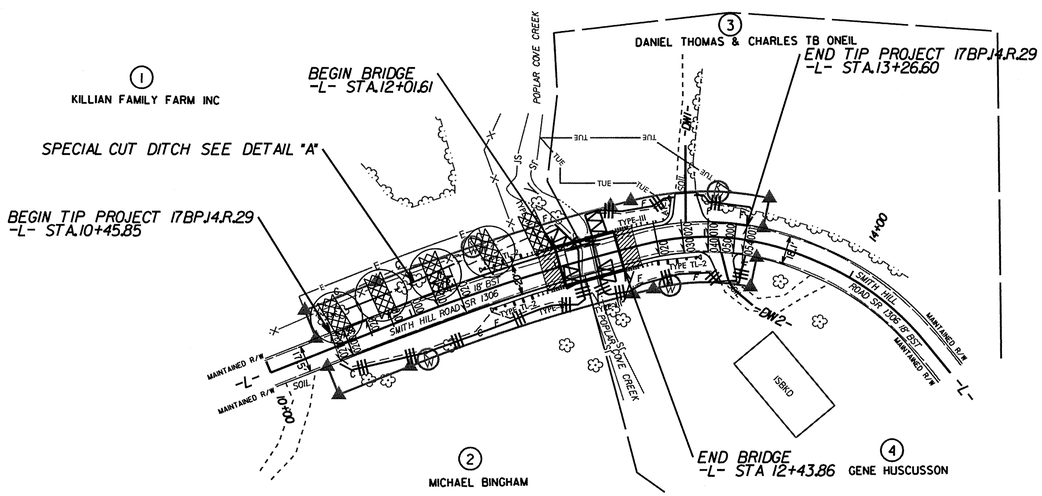

DETAIL A

SPECIAL CUT DITCH

(Not to Scale)

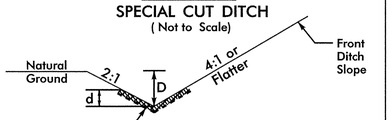

Min. D = 2 Ft.
Max. d = 2 Ft.

Type of Liner = Class A Rip-Rap

FROM -L- STA. 10+45 LT TO STA. 11+50 LT

PROJECT REFERENCE NO.	SHEET NO.
17BPJ4R.29	RF-1
R/W SHEET NO.	
ROADWAY DESIGN ENGINEER	HYDRAULICS ENGINEER

PLANTING DETAILS

LIVE STAKES PLANTING DETAIL

LIVE STAKE

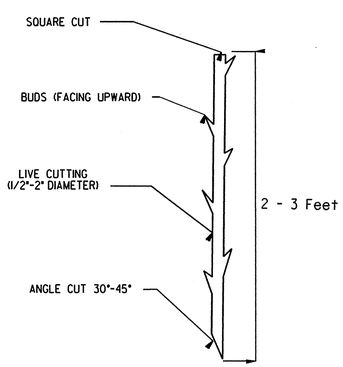

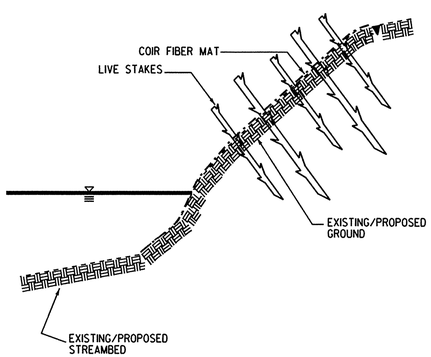

BANK STABILIZATION WITH LIVE STAKES

NOTE:
LIVE STAKES SHALL BE SPACED APPROXIMATELY 4 FEET ON CENTER
LIVE STAKES SHALL BE DRIVEN UNTIL APPROXIMATELY 3/4 OF LIVE STAKE IS WITHIN GROUND

BAREROOT PLANTING DETAIL
DIBBLE PLANTING METHOD
USING THE KBC PLANTING BAR

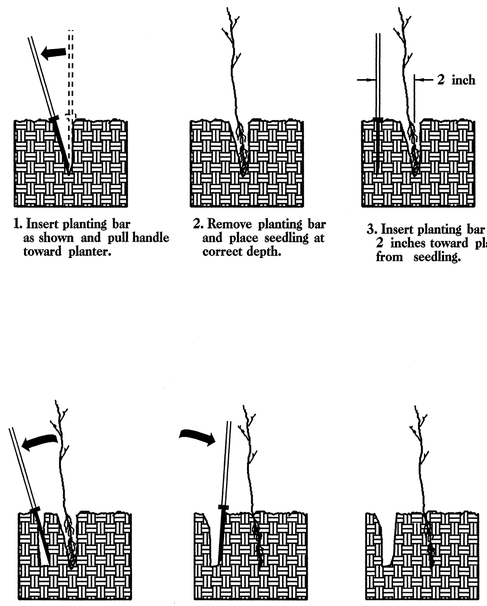

1. Insert planting bar as shown and pull handle toward planter.
2. Remove planting bar and place seedling at correct depth.
3. Insert planting bar 2 inches toward planter from seedling.
4. Pull handle of bar toward planter, firming soil at bottom.
5. Push handle forward firming soil at top.
6. Leave compaction hole open. Water thoroughly.

PLANTING NOTES:

PLANTING BAG
During planting, seedlings shall be kept in a moist canvas bag or similar container to prevent the root systems from drying.

KBC PLANTING BAR
Planting bar shall have a blade with a triangular cross section, and shall be 12 inches long, 4 inches wide and 1 inch thick at center.

ROOT PRUNING
All seedlings shall be root pruned, if necessary, so that no roots extend more than 10 inches below the root collar.

☐ TYPE 1 STREAMBANK REFORESTATION SHALL BE PLANTED 3 FT. TO 5 FT. ON CENTER, RANDOM SPACING, AVERAGING 4 FT. ON CENTER, APPROXIMATELY 2724 PLANTS PER ACRE.

☐ TYPE 2 STREAMBANK REFORESTATION SHALL BE PLANTED 6 FT. TO 10 FT. ON CENTER, RANDOM SPACING, AVERAGING 8 FT. ON CENTER, APPROXIMATELY 680 PLANTS PER ACRE.

☐ NOTE: TYPE 1 AND TYPE 2 STREAMBANK REFORESTATION SHALL BE PAID FOR AS "STREAMBANK REFORESTATION"

STREAMBANK REFORESTATION TYPICAL

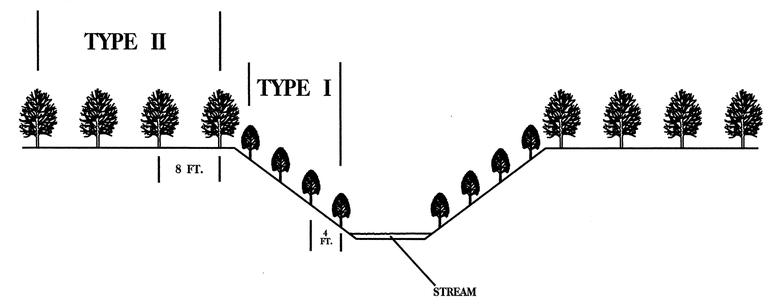

STREAMBANK REFORESTATION

MIXTURE, TYPE, SIZE, AND FURNISH SHALL CONFORM TO THE FOLLOWING:

TYPE 1			
50%	SALIX NIGRA	BLACK WILLOW	2 ft - 3 ft LIVE STAKES
50%	CORNUS AMOMUM	SILKY DOGWOOD	2 ft - 3 ft LIVE STAKES
TYPE 2			
25%	LIRIODENDRON TULIPIFERA	TULIP POPLAR	12 in - 18 in BR
25%	PLATANUS OCCIDENTALIS	SYCAMORE	12 in - 18 in BR
25%	PRUNUS SEROTINA	BLACK CHERRY	12 in - 18 in BR
25%	BETULA NIGRA	RIVER BIRCH	12 in - 18 in BR

☐ SEE PLAN SHEETS FOR AREAS TO BE PLANTED

STREAMBANK REFORESTATION DETAIL SHEET 1 OF 2

N.C.D.O.T. - ROADSIDE ENVIRONMENTAL UNIT

PROJECT REFERENCE NO.	SHEET NO.
17BPJ4.R.29	RF-2
R/W SHEET NO.	
ROADWAY DESIGN ENGINEER	HYDRAULICS ENGINEER

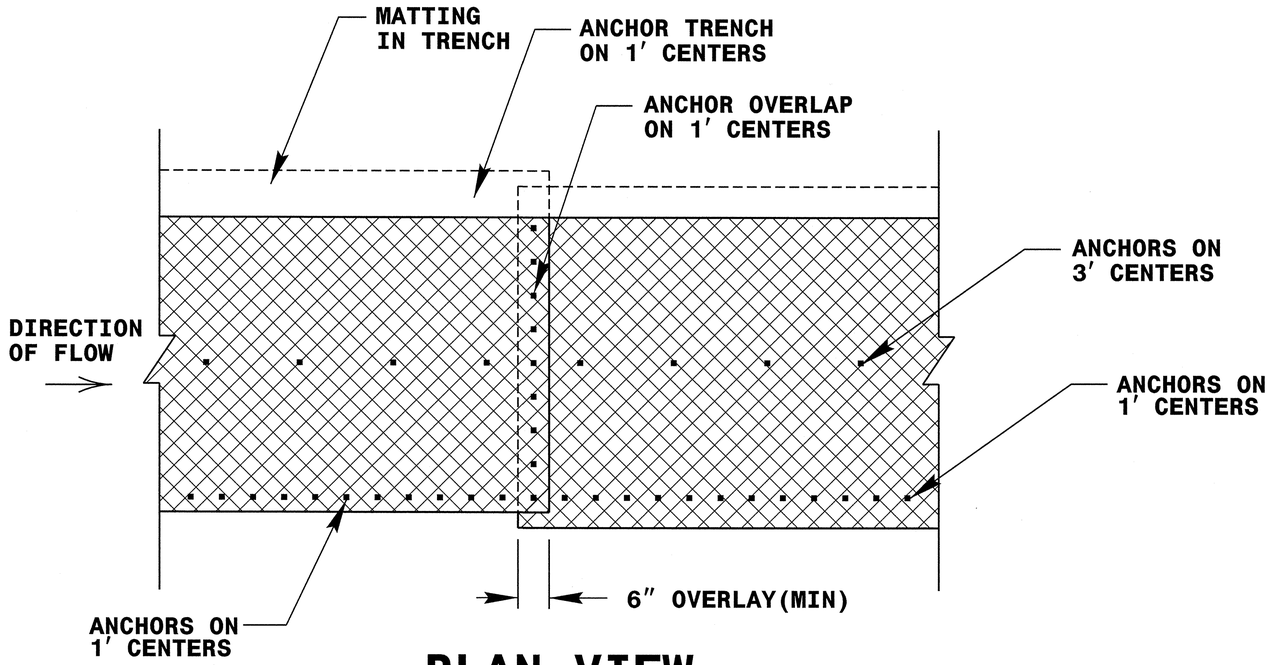

PLAN VIEW

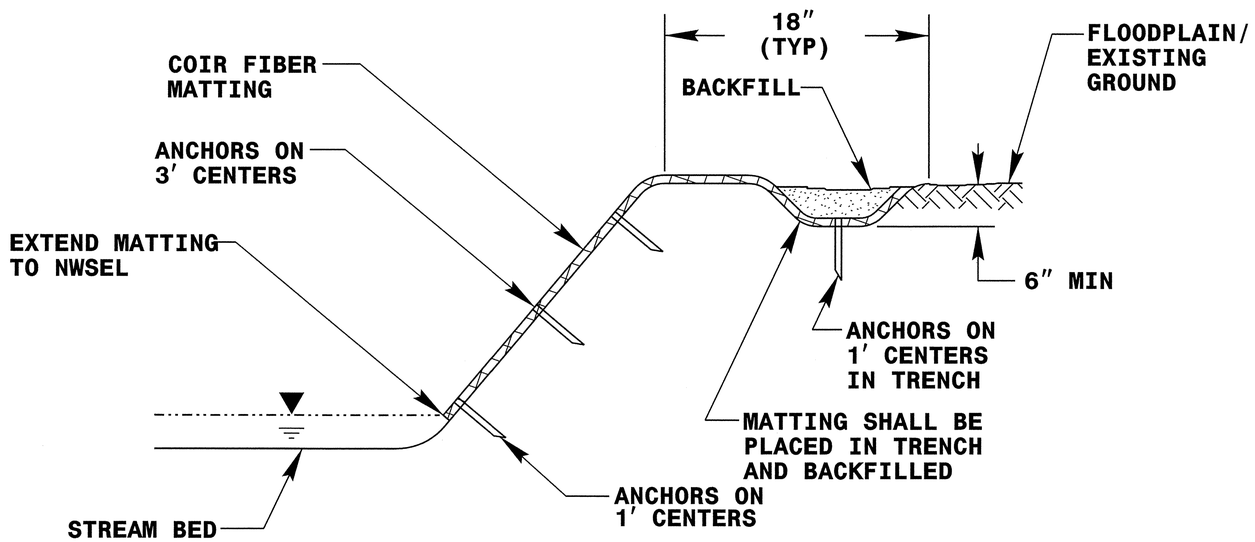

TYPICAL CROSS SECTION

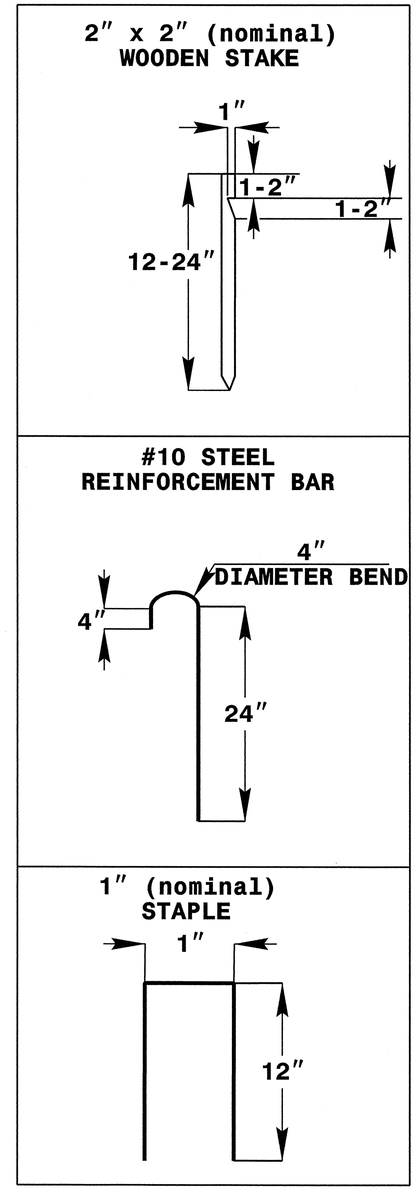

ANCHOR OPTIONS

COIR FIBER MATTING DETAIL

NOT TO SCALE

STREAMBANK REFORESTATION

DETAIL SHEET 2 OF 2

N.C.D.O.T. - ROADSIDE ENVIRONMENTAL UNIT

UTILITIES BY OTHERS
BRIDGE: 243

NOTE:
ALL PROPOSED UTILITY WORK SHOWN ON THIS SHEET WILL BE DONE BY OTHERS

PROJECT REFERENCE NO.	SHEET NO.
17BP14.R.29	UBO-1
R/W SHEET NO.	

ROADWAY DESIGN ENGINEER: NORTH CAROLINA PROFESSIONAL SEAL 022599 ENGINEER JAMES B. VOSS

HYDRAULICS ENGINEER: NORTH CAROLINA PROFESSIONAL SEAL 028945 ENGINEER DANA J. BOLDEN

Prepared in the Office of:
Mattern & Craig
CONSULTING ENGINEERS - SURVEYORS
12 BROAD STREET
ASHEVILLE, NORTH CAROLINA 28801
(828) 254-2201 - FAX (828) 254-4562

25 12.5 0 25 50
SCALE

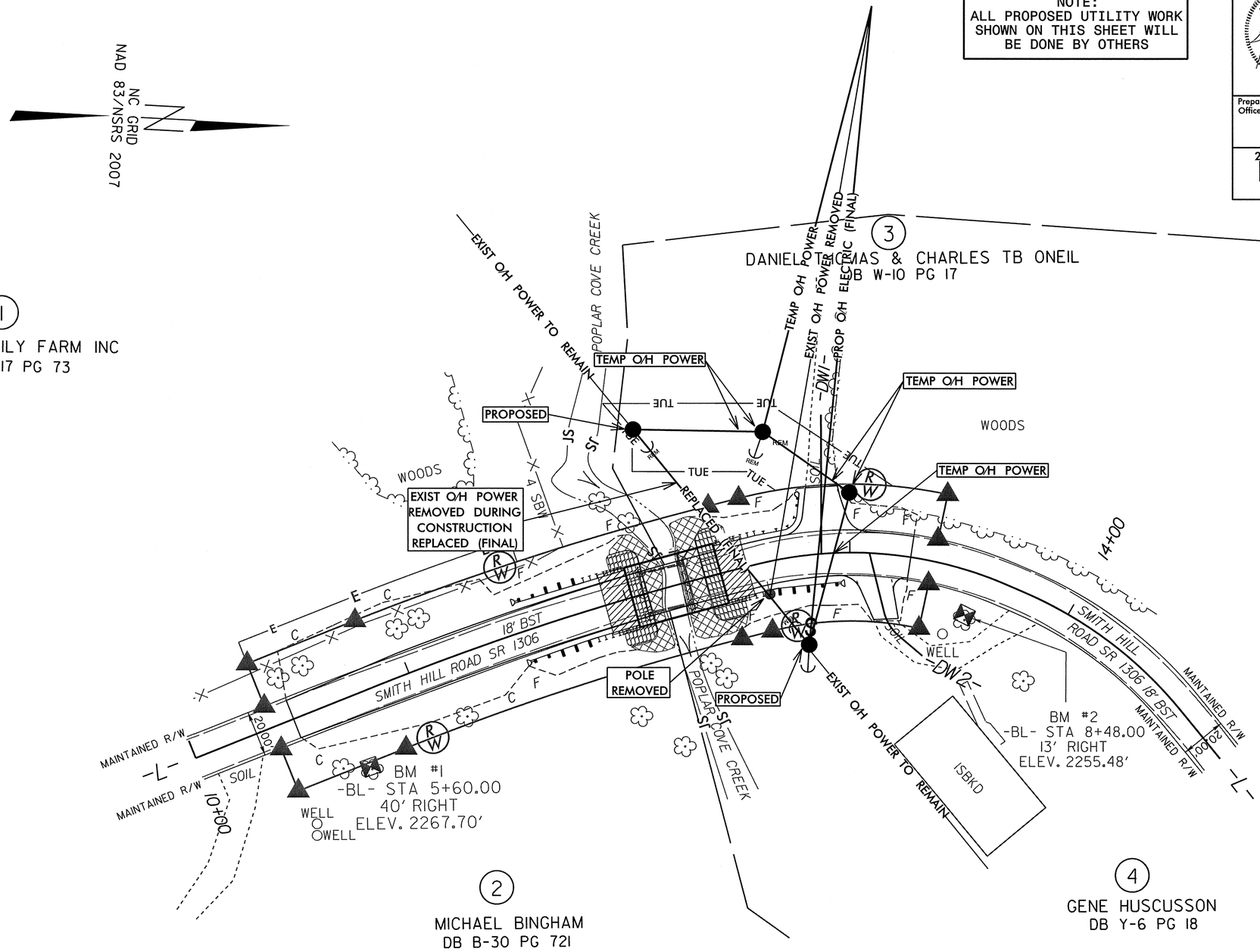

5/14/99

\Bridge243\Utilities\Rdy_Ut\Proj\17BP14R29_RDY_UTL.dgn 1:58:44 PM

PROJECT REFERENCE NO.	SHEET NO.
17BP.14.R.29	X-1A

STATE OF NORTH CAROLINA
DIVISION OF HIGHWAYS

CROSS SECTION SUMMARY

LOCATION	UNCLASSIFIED EXCAVATION	EMBT+%
-L- 10+45.85 TO 10+50	4	0
-L- 10+50 TO 11+00	74	8
-L- 11+00 TO 11+50	36	33
-L- 11+50 TO 12+00	0	93
-L- 12+00 TO 12+50	0	115
-L- 12+50 TO 13+00	0	55
-L- 13+00 TO 13+26.60	0	3

Note: Embankment column does not include fill for undercut.

Approximate quantities only. Unclassified excavation, borrow excavation, shoulder borrow, fine grading, clearing and grubbing, breaking of existing pavement and removal of existing pavement will be paid for at the lump sum price for "Grading".

8/23/99

0 5 10	PROJ. REFERENCE NO.	SHEET NO.
	17BP.14.R.29	X-1

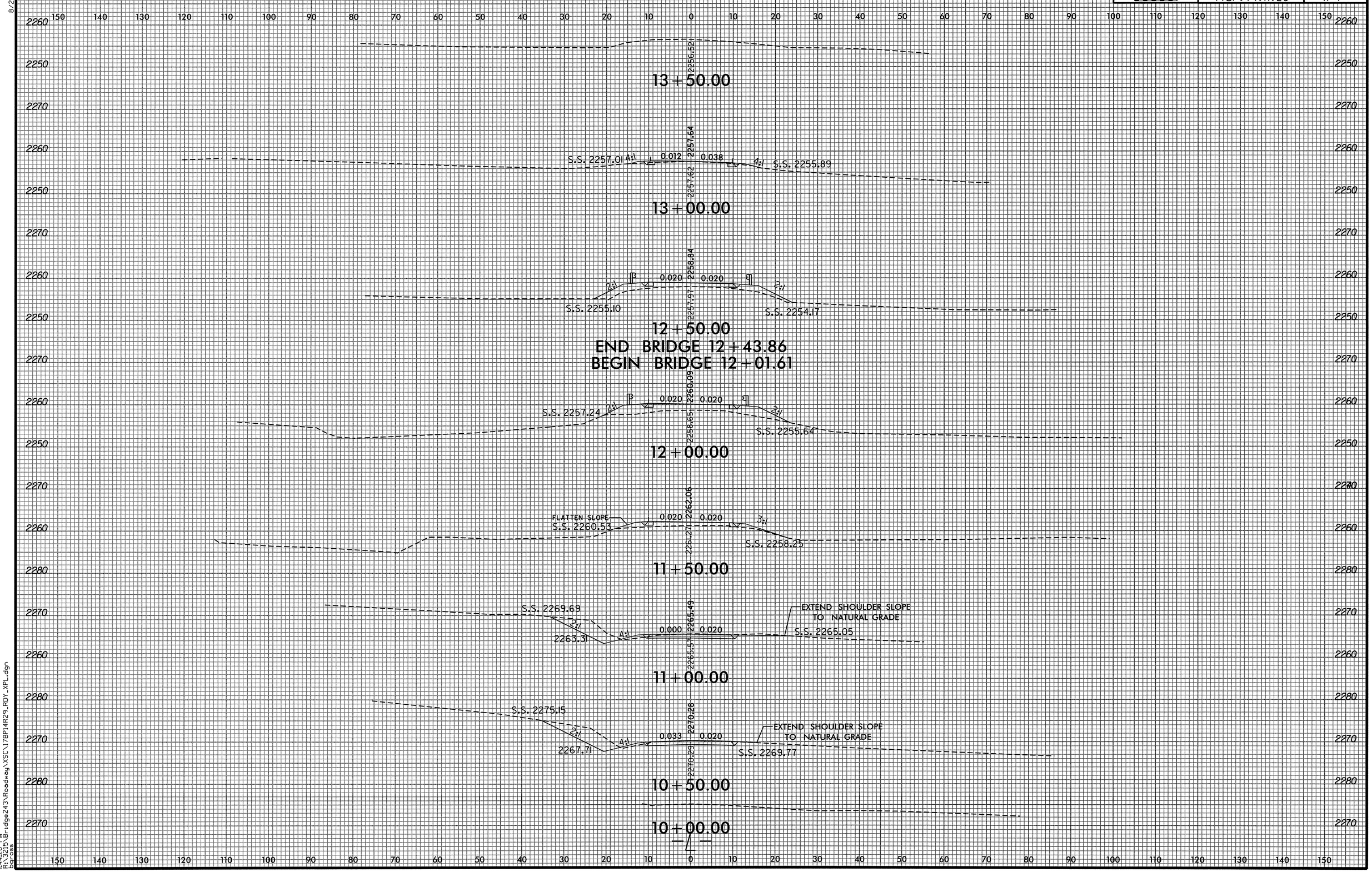

1:44:26 PM
R:\3215\Bridge243\Roadway\XSC\17BP14R29_RDY_XPL.dgn
bgross

09/08/99

TIP PROJECT: 17BP.14.R.29

STATE	STATE PROJECT REFERENCE NO.	SHEET NO.	TOTAL SHEETS
N.C.	17BP.14.R.29	TS-0	

STATE PROJ. NO.	F.A. PROJ. NO.	DESCRIPTION
17BP.14.R.29		PE, R/W, UTIL
17BP.14.R.29		CONST

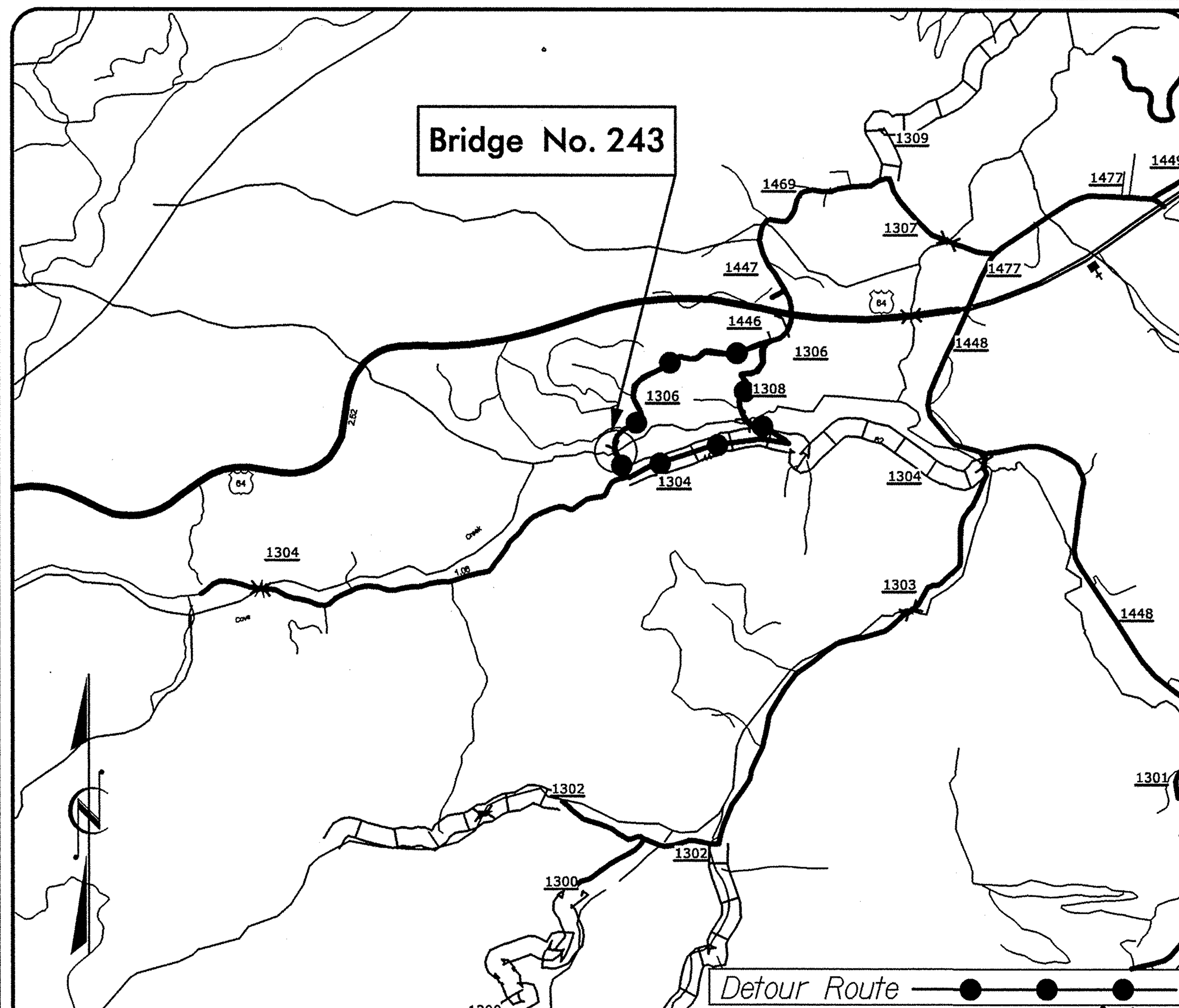

VICINITY MAP

STATE OF NORTH CAROLINA
DIVISION OF HIGHWAYS

MACON COUNTY

LOCATION: BRIDGE 243 (POPULAR COVE CREEK) ON SR 1306 (SMITH HILL ROAD)

TYPE OF WORK: GRADING, PAVING, DRAINAGE & STRUCTURE

STRUCTURE

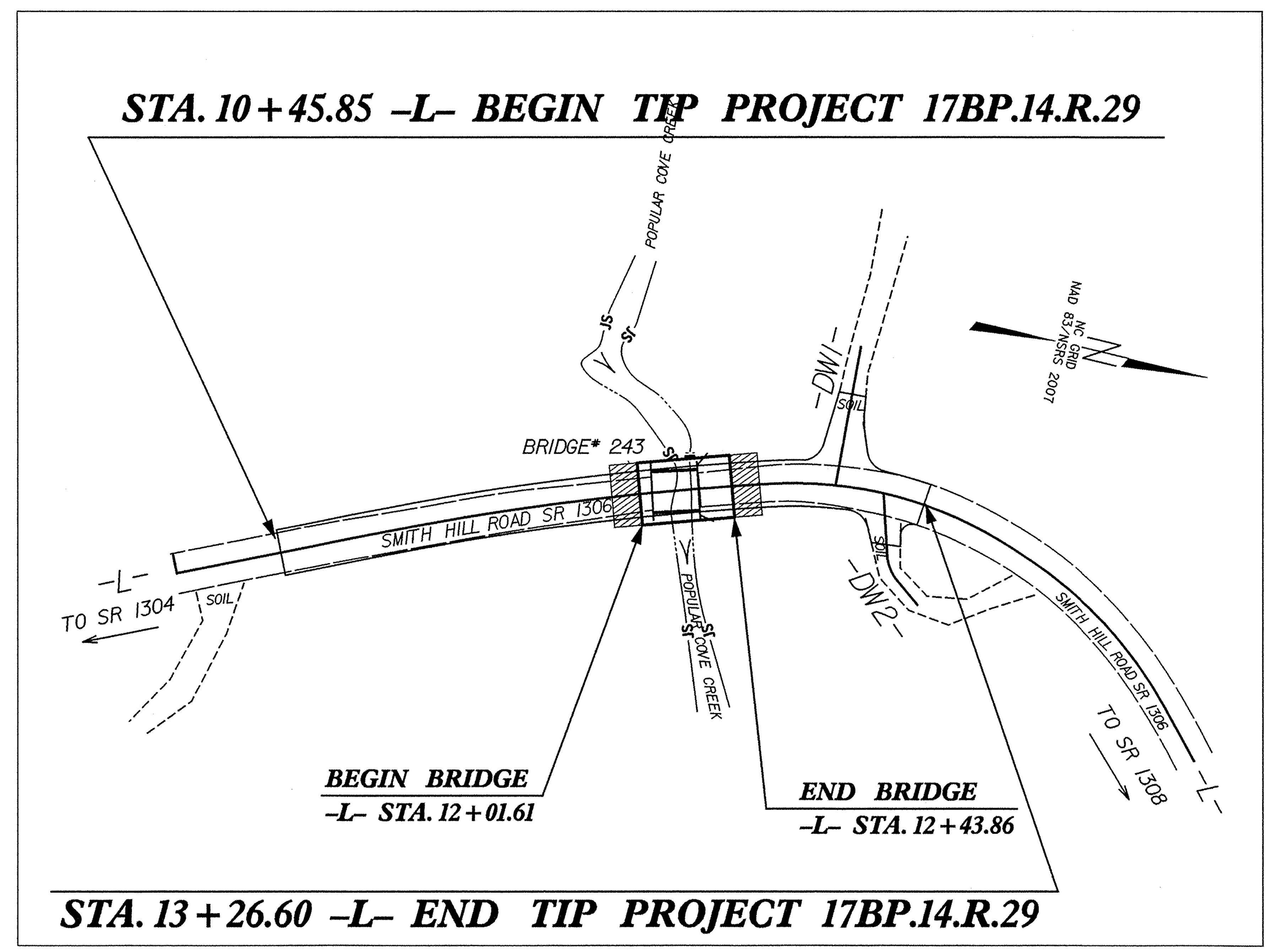

CONTRACT:

$$$$$$SYSTIME$$$$$$
$$$$$$$$$DGN$$$$$$$$$$$$$$$$$$
$$$$USERNAME$$$$

DESIGN DATA

ADT (2009)= 250

V = 25 MPH

FUNC CLASS = LOCAL SUB-REGIONAL TIER

PROJECT LENGTH

LENGTH ROADWAY TIP PROJECT 17BP.14.R.29	=	*0.045 MI*
LENGTH STRUCTURE TIP PROJECT 17BP.14.R.29	=	*0.008 MI*
TOTAL LENGTH TIP PROJECT 17BP.14.R.29	=	*0.053 MI*

NCDOT CONTACT: JOSHUA DEYTON, P.E.
PROJECT ENGINEER

Prepared In the Office of:
Mattern & Craig
CONSULTING ENGINEERS - SURVEYORS
12 BROAD STREET
ASHEVILLE, NORTH CAROLINA 28801
(828) 254-2201 - FAX (828) 254-4562

2012 STANDARD SPECIFICATIONS

RIGHT OF WAY DATE: AUGUST 1, 2013

LETTING DATE: FEBRUARY, 2014

JAMES B. VOSO, P.E.
PROJECT ENGINEER

STEVEN A. CAMPBELL, P.E.
PROJECT DESIGN ENGINEER

BRIDGE ENGINEER

P.E.
SIGNATURE:

DIVISION OF HIGHWAYS
STATE OF NORTH CAROLINA

P.E.
STATE HIGHWAY DESIGN ENGINEER

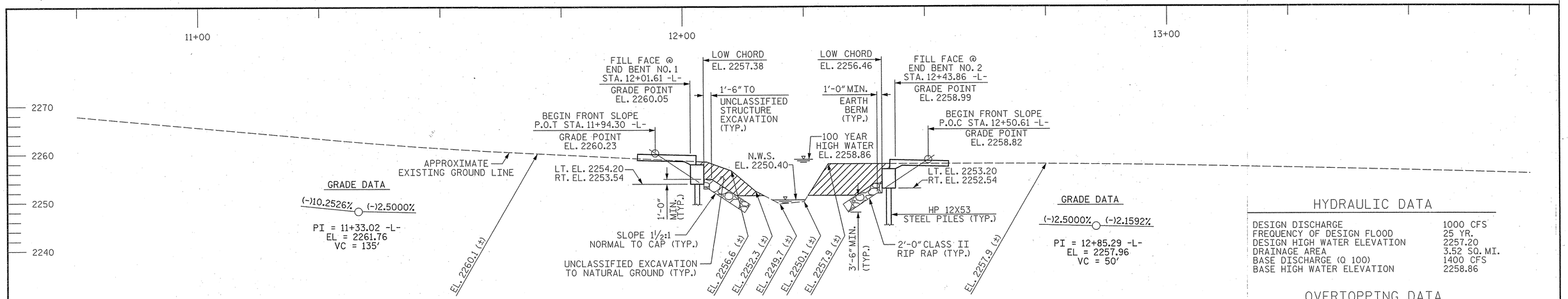

SECTION ALONG -L-

(SECTIONS AT END BENTS ARE AT RIGHT ANGLES)

APPROXIMATE GROUND LINE ELEVATIONS ARE TAKEN ALONG THE EDGE OF BRIDGE ON UPSTREAM SIDE.

HYDRAULIC DATA

DESIGN DISCHARGE	1000 CFS
FREQUENCY OF DESIGN FLOOD	25 YR.
DESIGN HIGH WATER ELEVATION	2257.20
DRAINAGE AREA	3.52 SQ. MI.
BASE DISCHARGE (Q 100)	1400 CFS
BASE HIGH WATER ELEVATION	2258.86

OVERTOPPING DATA

OVERTOPPING DISCHARGE	950 CFS
FREQUENCY OF OVERTOPPING FLOOD	25 YR.±
OVERTOPPING FLOOD ELEVATION	2257.20

OVERTOPPING OCCURS APPROXIMATELY 150' LEFT OF BRIDGE AT ELEV. 2253.60

INSET SHOWING W.P. #1

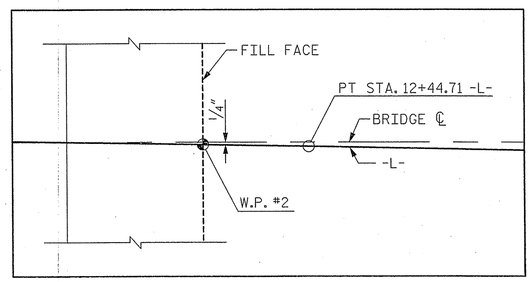

INSET SHOWING W.P. #2

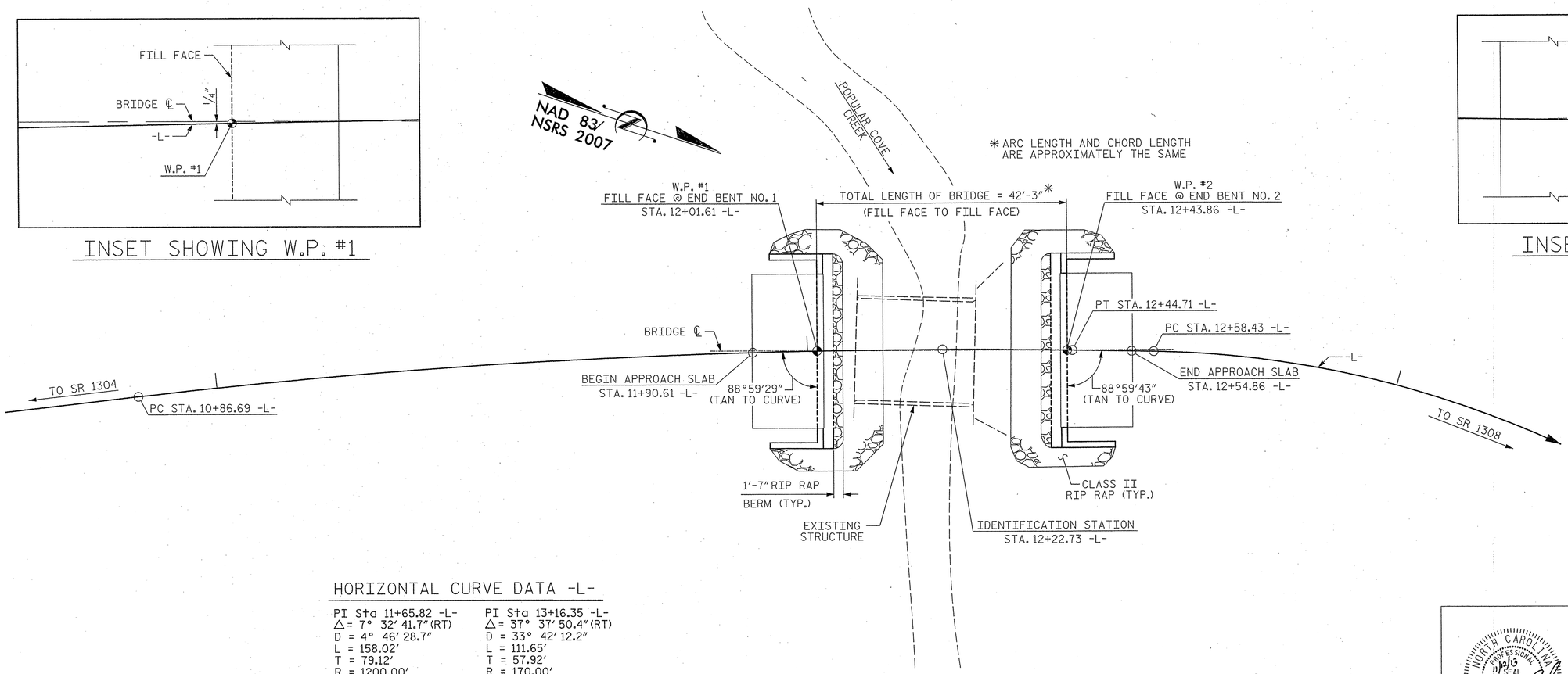

PLAN

(PILES NOT SHOWN FOR CLARITY)

HORIZONTAL CURVE DATA -L-

PI Sta 11+65.82 -L-	PI Sta 13+16.35 -L-
Δ = 7° 32' 41.7" (RT)	Δ = 37° 37' 50.4" (RT)
D = 4° 46' 28.7"	D = 33° 42' 12.2"
L = 158.02'	L = 111.65'
T = 79.12'	T = 57.92'
R = 1200.00'	R = 170.00'
SE = 0.02	SE = VARIES
V = 20 MPH	V = 20 MPH

PROJECT NO. 17BP.14.R.29

MACON COUNTY

STATION: 12+22.73 -L-

SHEET 1 OF 2 REPLACES BRIDGE NO. 243

STATE OF NORTH CAROLINA
DEPARTMENT OF TRANSPORTATION
RALEIGH

GENERAL DRAWING FOR BRIDGE ON SR 1306 OVER POPULAR COVE CREEK BETWEEN SR 1304 AND SR 1308

REVISIONS							SHEET NO.
NO.	BY:	DATE:	NO.	BY:	DATE:		S-1
1			3				TOTAL SHEETS
2			4				13

Prepared in the Office of: Mattern & Craig
CONSULTING ENGINEERS - SURVEYORS
12 BROAD STREET
ASHEVILLE, NORTH CAROLINA 28801
(828) 254-2201 - FAX (828) 254-4562

NORTH CAROLINA PROFESSIONAL SEAL 14370 ENGINEER STEVEN A. CAMPBELL 11/12/13

DRAWN BY : PFC	DATE : 11/13		
CHECKED BY : CMT	DATE : 11/13		

BENCHMARK: B.M. #1: 8" SPIKE IN BASE OF 40" PINE TREE 31.91' RT. OF -L- STA. 10+69.22, EL. 2267.70

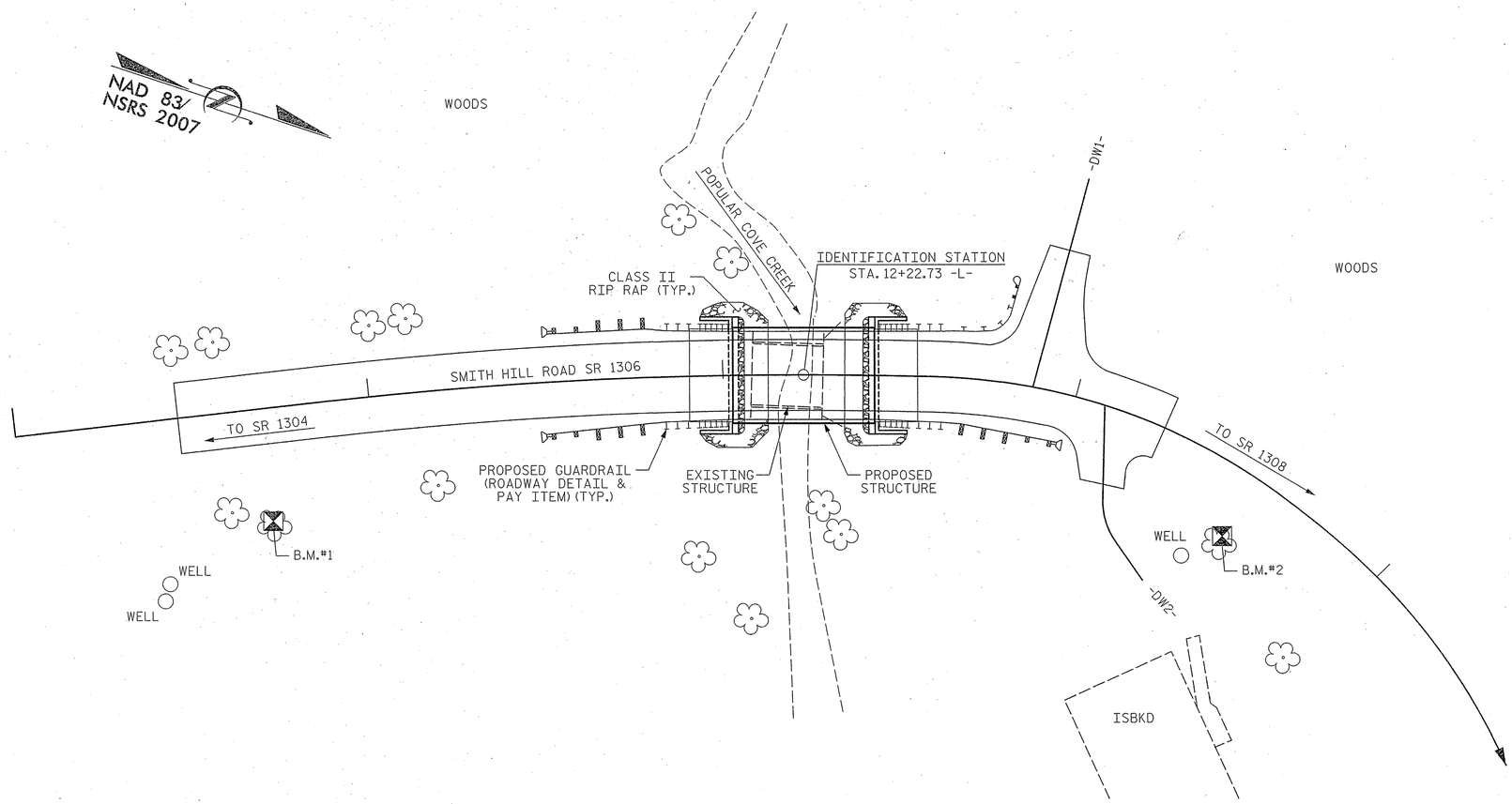

LOCATION SKETCH

NO KNOWN UTILITY CONFLICTS.

NOTES:

ASSUMED LIVE LOAD = HL-93 OR ALTERNATE LOADING.

FOR EROSION CONTROL MEASURES, SEE EROSION CONTROL PLANS.

THIS STRUCTURE HAS BEEN DESIGNED IN ACCORDANCE WITH THE AASHTO LRFD BRIDGE DESIGN SPECIFICATIONS.

THE EXISTING STRUCTURE CONSISTING OF 1 SPAN AT 20'-6", 17'-2" CLEAR ROADWAY WIDTH, TIMBER FLOOR ON TIMBER JOISTS, ON TIMBER CAPS WITH TIMBER POSTS AND SILLS, AT EXISTING CROSSING FOR PROPOSED STRUCTURE, SHALL BE REMOVED. THE EXISTING BRIDGE IS CURRENTLY POSTED BELOW THE LEGAL LOAD LIMIT. SHOULD THE STRUCTURAL INTEGRITY OF THE BRIDGE FURTHER DETERIORATE, THE LOAD LIMITATION MAY BE REDUCED AS FOUND NECESSARY DURING THE LIFE OF THE PROJECT.

REMOVAL OF THE EXISTING BRIDGE SHALL BE PERFORMED AS NOT TO ALLOW DEBRIS TO FALL INTO THE WATER. THE CONTRACTOR SHALL REMOVE THE BRIDGE AND SUBMIT PLANS FOR DEMOLITION IN ACCORDANCE WITH ARTICLE 402-2 OF THE STANDARD SPECIFICATIONS.

THE MATERIAL SHOWN IN THE CROSS -HATCHED AREA SHALL BE EXCAVATED FOR A DISTANCE OF 20 FT± EACH SIDE OF CENTERLINE ROADWAY AS DIRECTED BY THE ENGINEER. THIS WORK WILL BE PAID FOR AT THE CONTRACT LUMP SUM PRICE FOR UNCLASSIFIED STRUCTURE EXCAVATION. SEE SECTION 412 OF THE STANDARD SPECIFICATIONS.

THE SUBSTRUCTURE OF THE EXISTING BRIDGE INDICATED ON THE PLANS IS FROM THE BEST INFORMATION AVAILABLE. SINCE THIS INFORMATION IS SHOWN FOR THE CONVENIENCE OF THE CONTRACTOR, THE CONTRACTOR SHALL HAVE NO CLAIM WHATSOEVER AGAINST THE DEPARTMENT OF TRANSPORTATION FOR ANY DELAYS OR ADDITIONAL COSTS INCURRED BASED ON DIFFERENCES BETWEEN THE EXISTING BRIDGE SUBSTRUCTURE SHOWN ON THE PLANS AND THE ACTUAL CONDITIONS AT THE PROJECT SITE.

FOR PILES, SEE SECTION 450 OF THE STANDARD SPECIFICATIONS.

PILES AT END BENT NO. 1 AND END BENT NO. 2 ARE DESIGNED FOR A FACTORED RESISTANCE OF 70 TONS PER PILE.

DRIVE PILES AT END BENT NO. 1 AND END BENT NO. 2 TO A REQUIRED DRIVING RESISTANCE OF 120 TONS PER PILE.

TESTING PILES WITH THE PDA DURING DRIVING, RESTRIKING OR REDRIVING MAY BE REQUIRED. THE ENGINEER WILL DETERMINE THE NEED FOR PDA TESTING. FOR PDA TESTING, SEE SECTION 450 OF THE STANDARD SPECIFICATIONS (AND FOR PILE DRIVING CRITERIA, SEE PILE DRIVING CRITERIA PROVISION).

FOR SUBMITTAL OF WORKING DRAWINGS, SEE SPECIAL PROVISIONS.

FOR FALSEWORK AND FORMWORK, SEE SPECIAL PROVISIONS.

FOR CRANE SAFETY, SEE SPECIAL PROVISIONS.

FOR OTHER DESIGN DATA AND GENERAL NOTES, SEE SHEET SN.

THIS STRUCTURE HAS BEEN DESIGNED IN ACCORDANCE WITH "HEC 18-EVALUATING SCOUR AT BRIDGES."

FOR GROUT FOR STRUCTURES, SEE SPECIAL PROVISIONS.

THIS BRIDGE IS LOCATED IN SEISMIC ZONE 1.

ASPHALT WEARING SURFACE IS INCLUDED IN ROADWAY QUANTITY ON ROADWAY PLANS.

PROJECT NO. 17BP.14.R.29
MACON COUNTY
STATION: 12+22.73 -L-

SHEET 2 OF 2 REPLACES BRIDGE NO. 243

TOTAL BILL OF MATERIAL

	REMOVAL OF EXISTING STRUCTURE	UNCLASSIFIED STRUCTURE EXCAVATION	CLASS A CONCRETE	BRIDGE APPROACH SLABS	REINFORCING STEEL	VERTICAL CONCRETE BARRIER RAIL	HP 12X53 STEEL PILES		PLAIN RIP RAP CLASS II (2'-0" THICK)	GEOTEXTILE FOR DRAINAGE	ELASTOMERIC BEARINGS	3'-0" X 1'-9" PRESTRESSED CONCRETE CORED SLAB UNITS	
	LUMP SUM	LUMP SUM	CU. YDS.	LUMP SUM	LBS.	LIN. FT.	NO.	LIN. FT.	TONS	SQ. YD.	LUMP SUM	NO.	LIN. FT.
SUPERSTRUCTURE						80.25					LUMP SUM	9	360
END BENT NO. 1			18.8		2299		5	275	47	52			
END BENT NO. 2			18.8		2299		5	230	40	44			
TOTAL	LUMP SUM	LUMP SUM	37.6	LUMP SUM	4598	80.25	10	505	87	96	LUMP SUM	9	360

DRAWN BY : PFC DATE : 11/13
CHECKED BY : CMT DATE : 11/13

Prepared in the Office of:
Mattern & Craig
CONSULTING ENGINEERS - SURVEYORS
12 BROAD STREET
ASHEVILLE, NORTH CAROLINA 28801
(828) 254-2201 - FAX (828) 254-4562

NORTH CAROLINA PROFESSIONAL SEAL 19509 ENGINEER STEVEN A. CAMPBELL

STATE OF NORTH CAROLINA
DEPARTMENT OF TRANSPORTATION
RALEIGH

GENERAL DRAWING
FOR BRIDGE ON
SR 1306 OVER
POPULAR COVE CREEK
BETWEEN SR 1304 AND SR 1308

REVISIONS						SHEET NO.
NO.	BY:	DATE:	NO.	BY:	DATE:	S-2
1			3			TOTAL SHEETS
2			4			13

LOAD AND RESISTANCE FACTOR RATING (LRFD) SUMMARY FOR PRESTRESSED CONCRETE GIRDERS

LEVEL		VEHICLE	WEIGHT (W) (TONS)	CONTROLLING LOAD RATING	MINIMUM RATING FACTORS (RF)	TONS = W X RF	STRENGTH I LIMIT STATE											SERVICE III LIMIT STATE						COMMENT NUMBER
							LIVELOAD FACTORS	MOMENT					SHEAR					LIVELOAD FACTORS	MOMENT					
								DISTRIBUTION FACTORS (DF)	RATING FACTOR	SPAN	GIRDER LOCATION	DISTANCE FROM LEFT END OF SPAN (ft)	DISTRIBUTION FACTORS (DF)	RATING FACTOR	SPAN	GIRDER LOCATION	DISTANCE FROM LEFT END OF SPAN (ft)		DISTRIBUTION FACTORS (DF)	RATING FACTOR	SPAN	GIRDER LOCATION	DISTANCE FROM LEFT END OF SPAN (ft)	
DESIGN LOAD RATING		HL-93(Inv)	N/A	1	1.319	--	1.75	0.278	1.76	40'	EL	19.5	0.549	1.32	40'	EL	1.95	0.80	0.278	1.55	40'	EL	19.5	
		HL-93(Opr)	N/A	--	1.709	--	1.35	0.278	2.28	40'	EL	19.5	0.549	1.71	40'	EL	1.95	N/A	--	--	--	--	--	
		HS-20(Inv)	36.000	2	1.540	55.449	1.75	0.278	2.21	40'	EL	19.5	0.549	1.54	40'	EL	1.95	0.80	0.278	1.94	40'	EL	19.5	
		HS-20(Opr)	36.000	--	1.997	71.878	1.35	0.278	2.86	40'	EL	19.5	0.549	2	40'	EL	1.95	N/A	--	--	--	--	--	
LEGAL LOAD RATING	SV	SNSH	13.500	--	3.606	48.687	1.4	0.278	5.1	40'	EL	19.5	0.549	4.13	40'	EL	1.95	0.80	0.278	3.61	40'	EL	19.5	
		SNGARBS2	20.000	--	2.964	59.289	1.4	0.278	4.19	40'	EL	15.6	0.549	3.07	40'	EL	1.95	0.80	0.278	2.96	40'	EL	19.5	
		SNAGRIS2	22.000	--	2.906	63.929	1.4	0.278	4.09	40'	EL	15.6	0.549	2.91	40'	EL	1.95	0.80	0.278	2.92	40'	EL	15.6	
		SNCOTTS3	27.250	--	1.803	49.125	1.4	0.278	2.55	40'	EL	19.5	0.549	2.07	40'	EL	1.95	0.80	0.278	1.80	40'	EL	19.5	
		SNAGGRS4	34.925	--	1.623	56.667	1.4	0.278	2.29	40'	EL	19.5	0.549	1.82	40'	EL	1.95	0.80	0.278	1.62	40'	EL	19.5	
		SNS5A	35.550	--	1.578	56.107	1.4	0.278	2.23	40'	EL	19.5	0.549	1.9	40'	EL	1.95	0.80	0.278	1.58	40'	EL	19.5	
		SNS6A	39.950	--	1.502	59.992	1.4	0.278	2.12	40'	EL	19.5	0.549	1.77	40'	EL	1.95	0.80	0.278	1.50	40'	EL	19.5	
		SNS7B	42.000	3	1.432	60.149	1.4	0.278	2.02	40'	EL	19.5	0.549	1.81	40'	EL	1.95	0.80	0.278	1.43	40'	EL	19.5	
	TTST	TNAGRIT3	33.000	--	1.848	60.976	1.4	0.278	2.61	40'	EL	19.5	0.549	2.08	40'	EL	1.95	0.80	0.278	1.85	40'	EL	19.5	
		TNT4A	33.075	--	1.872	61.901	1.4	0.278	2.65	40'	EL	19.5	0.549	1.98	40'	EL	1.95	0.80	0.278	1.87	40'	EL	19.5	
		TNT6A	41.600	--	1.587	66.032	1.4	0.278	2.24	40'	EL	19.5	0.549	1.94	40'	EL	1.95	0.80	0.278	1.59	40'	EL	19.5	
		TNT7A	42.000	--	1.627	68.354	1.4	0.278	2.3	40'	EL	19.5	0.549	1.79	40'	EL	1.95	0.80	0.278	1.63	40'	EL	19.5	
		TNT7B	42.000	--	1.664	69.888	1.4	0.278	2.35	40'	EL	19.5	0.549	1.72	40'	EL	1.95	0.80	0.278	1.66	40'	EL	19.5	
		TNAGRIT4	43.000	--	1.619	69.61	1.4	0.278	2.28	40'	EL	15.6	0.549	1.65	40'	EL	1.95	0.80	0.278	1.62	40'	EL	19.5	
		TNAGT5A	45.000	--	1.498	67.412	1.4	0.278	2.12	40'	EL	19.5	0.549	1.71	40'	EL	1.95	0.80	0.278	1.50	40'	EL	19.5	
		TNAGT5B	45.000	--	1.455	65.486	1.4	0.278	2.06	40'	EL	19.5	0.549	1.56	40'	EL	1.95	0.80	0.278	1.46	40'	EL	19.5	

LOAD FACTORS:

DESIGN LOAD RATING FACTORS	LIMIT STATE	γ_{DC}	γ_{DW}
	STRENGTH I	1.25	1.50
	SERVICE III	1.00	1.00

NOTES:

MINIMUM RATING FACTORS ARE BASED ON THE STRENGTH I AND SERVICE III LIMIT STATES.

ALLOWABLE STRESSES FOR SERVICE III LIMIT STATE ARE AS REQUIRED FOR DESIGN.

⟨#⟩ CONTROLLING LOAD RATING

⟨1⟩ DESIGN LOAD RATING (HL-93)

⟨2⟩ DESIGN LOAD RATING (HS-20)

⟨3⟩ LEGAL LOAD RATING **

** SEE CHART FOR VEHICLE TYPE

GIRDER LOCATION

I - INTERIOR GIRDER
EL - EXTERIOR LEFT GIRDER
ER - EXTERIOR RIGHT GIRDER

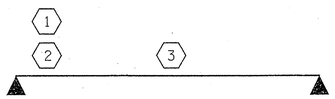

LRFR SUMMARY

PROJECT NO. 17BP.14.R.29
MACON COUNTY
STATION: 12+22.73 -L-

STATE OF NORTH CAROLINA
DEPARTMENT OF TRANSPORTATION
RALEIGH

STANDARD
LRFR SUMMARY FOR
40' CORED SLAB UNIT
90° SKEW
(NON-INTERSTATE TRAFFIC)

REVISIONS							SHEET NO.
NO.	BY:	DATE:	NO.	BY:	DATE:		S-3
1			3				TOTAL SHEETS
2			4				13

NORTH CAROLINA PROFESSIONAL SEAL 14709 ENGINEER STEVEN A. CAMPBELL 11/13

Prepared in the Office of:
Mattern & Craig
CONSULTING ENGINEERS - SURVEYORS
12 BROAD STREET
ASHEVILLE, NORTH CAROLINA 28801
(828) 254-2201 - FAX (828) 254-4552

ASSEMBLED BY :	PFC	DATE :	11/13
CHECKED BY :	CMT	DATE :	11/13
DRAWN BY : CVC	6/10		
CHECKED BY : DNS	6/10		

$$$$$$SYSTIME$$$$$
$$$$$$$$$$$$$$$$$$$$$$$$DGN$$$$$$$$$$$$$$$$$$$$$$$$
$$$$USERNAME$$$$

STD. NO. 21LRFR1_90S_40L

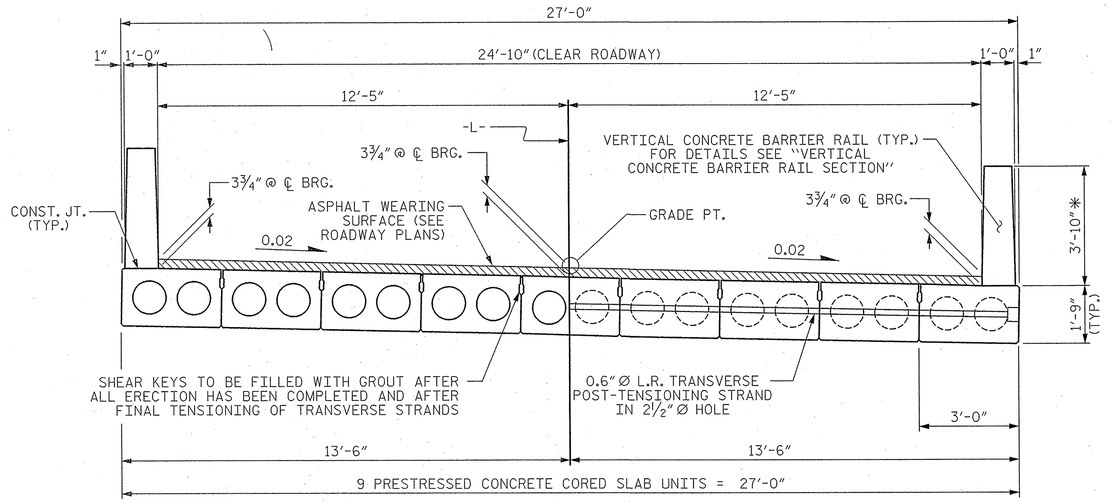

HALF SECTION
AT INTERMEDIATE DIAPHRAGMS

HALF SECTION
THROUGH VOIDS

TYPICAL SECTION

* - THE MAXIMUM BARRIER RAIL HEIGHT AND ASPHALT THICKNESS IS SHOWN. THE HEIGHT OF THE BARRIER RAIL AND ASPHALT THICKNESS VARIES WHILE THE TOP OF THE BARRIER RAIL FOLLOWS THE PROFILE OF THE GUTTERLINE. FOR RAIL HEIGHT DETAILS AND ASPHALT THICKNESS SEE THE "VERTICAL CONCRETE BARRIER RAIL SECTION" DETAIL.

FIXED END

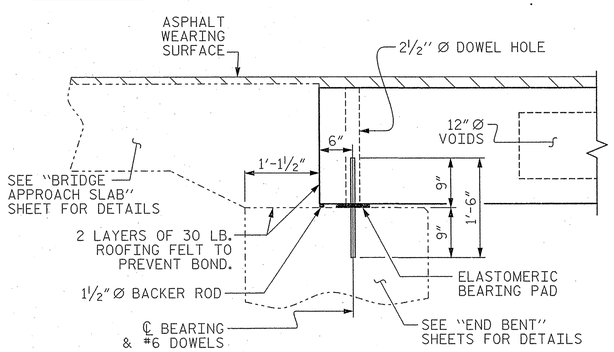

SECTION AT END BENT

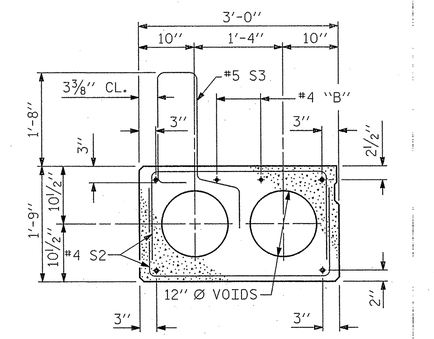

EXT. SLAB SECTION

(FOR PRESTRESSED STRAND LAYOUT, SEE INTERIOR SLAB SECTION.)

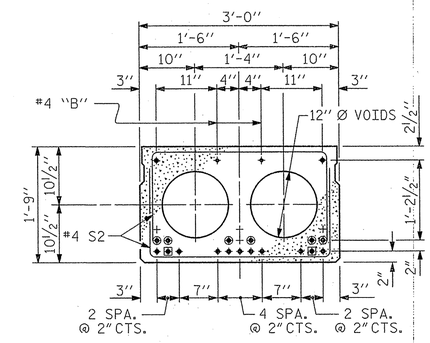

INTERIOR SLAB SECTION
(40' UNIT)
(13 STRANDS REQUIRED)

0.6" Ø LOW RELAXATION STRAND LAYOUT

◉ BOND SHALL BE BROKEN ON THESE STRANDS FOR A DISTANCE OF 2'-0" FROM END OF CORED SLAB UNIT. SEE STANDARD SPECIFICATIONS, ARTICLE 1078-7.

◉ OPTIONAL FULL LENGTH DEBONDED STRANDS. THESE STRANDS ARE NOT REQUIRED. IF THE FABRICATOR CHOOSES TO INCLUDE THESE STRANDS IN THE CORED SLAB UNIT, THE STRANDS SHALL BE DEBONDED FOR THE FULL LENGTH OF THE UNIT AT NO ADDITIONAL COST. SEE STANDARD SPECIFICATIONS, ARTICLE 1078-7.

DEBONDING LEGEND

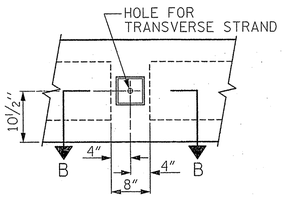

ELEVATION VIEW

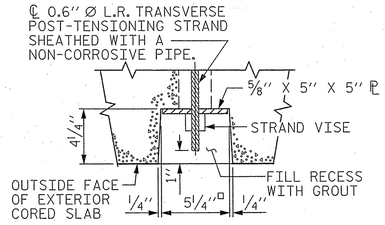

SECTION B-B

GROUTED RECESS AT END OF POST-TENSIONED STRAND OF CORED SLABS

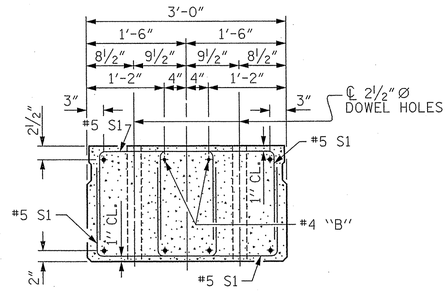

END ELEVATION

SHOWING PLACEMENT OF DOUBLE STIRRUPS AND LOCATION OF DOWEL HOLES. (STRAND LAYOUT NOT SHOWN.) INTERIOR SLAB UNIT SHOWN-EXTERIOR SLAB UNIT SIMILAR EXCEPT SHEAR KEY LOCATION.

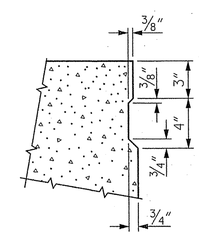

SHEAR KEY DETAIL

NOTE: OMIT SHEAR KEY ON OUTSIDE FACE OF EXTERIOR CORED SLABS.

PROJECT NO. 17BP.14.R.29
MACON COUNTY
STATION: 12+22.73 -L-

STATE OF NORTH CAROLINA
DEPARTMENT OF TRANSPORTATION
RALEIGH

STANDARD
3'-0" X 1'-9"
PRESTRESSED CONCRETE CORED SLAB UNIT
90° SKEW

ASSEMBLED BY :	PFC	DATE :	11/13
CHECKED BY :	CMT	DATE :	11/13
DRAWN BY : DGE	5/09	REV. 12/11	MAA/AAC
CHECKED BY : BCH	6/09		

Prepared in the Office of: Mattern & Craig
CONSULTING ENGINEERS - SURVEYORS
12 BROAD STREET
ASHEVILLE, NORTH CAROLINA 28801
(828) 254-2201 - FAX (828) 254-4562

NORTH CAROLINA PROFESSIONAL SEAL 14903 ENGINEER STEVEN A. CANNON
11/13/13

REVISIONS						SHEET NO.
NO.	BY:	DATE:	NO.	BY:	DATE:	S-4
1			3			TOTAL SHEETS
2			4			13

STD. NO. 21" PCS2_27_90S

$$$$$$SYSTIME$$$$$
$$$$$$$$$$$$$$$$$$$$$$$$$$DGN$$$$$$$$$$$$$$$$$$$$$$$$
$$$$USERNAME$$$$

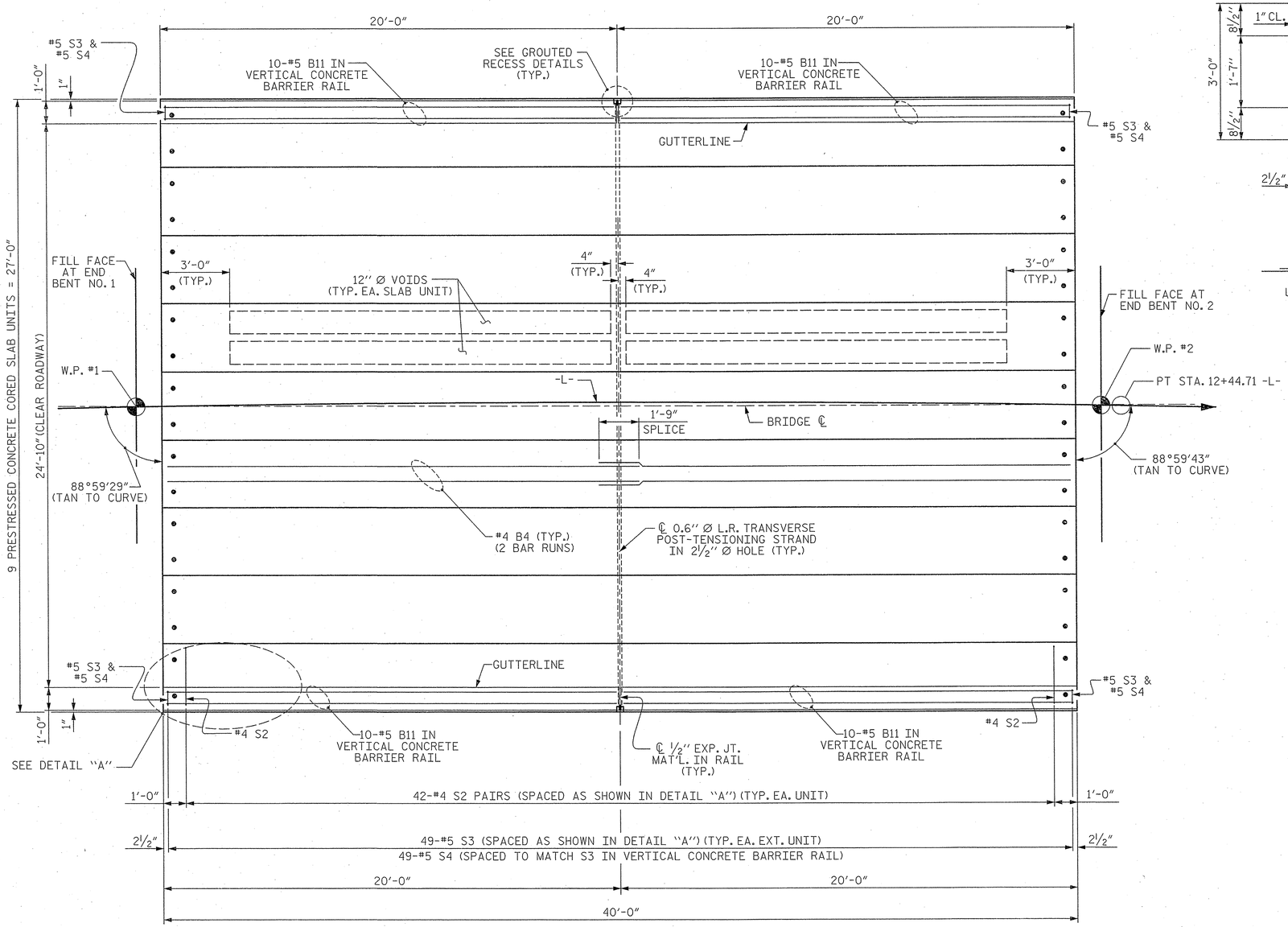

PLAN OF UNIT

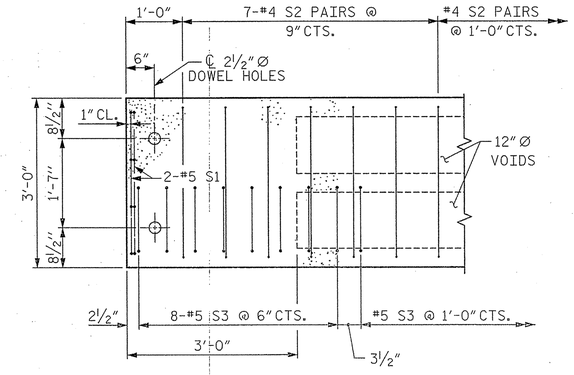

DETAIL "A"

NOTE: EXTERIOR UNIT SHOWN - INTERIOR UNIT SIMILAR EXCEPT OMIT #5 S3 BARS.

PROJECT NO. 17BP.14.R.29

MACON COUNTY

STATION: 12+22.73 -L-

STATE OF NORTH CAROLINA
DEPARTMENT OF TRANSPORTATION
RALEIGH

PLAN OF 40' UNIT 24'-10" CLEAR ROADWAY 90° SKEW

ASSEMBLED BY :	PFC	DATE :	11/13
CHECKED BY :	CMT	DATE :	11/13
DRAWN BY : DGE	5/09	REV. 12/5/11	MAA/AAC
CHECKED BY : BCH	6/09		

Prepared in the Office of: Mattern & Craig
CONSULTING ENGINEERS - SURVEYORS
12 BROAD STREET
ASHEVILLE, NORTH CAROLINA 28801
(828) 254-2201 - FAX (828) 254-4562

NORTH CAROLINA PROFESSIONAL SEAL 14309 ENGINEER SEVIN A. CAMPBELL

REVISIONS							SHEET NO.
NO.	BY:	DATE:	NO.	BY:	DATE:		S-5
1			3				TOTAL SHEETS
2			4				13

$$$$$$SYSTIME$$$$$
$$$$$$$$$$$$$$$$$$$$$$DGN$$$$$$$$$$$$$$$$$$$$$$$$
$$$$USERNAME$$$$

STD. NO. 21"PCS_27_90S_40L

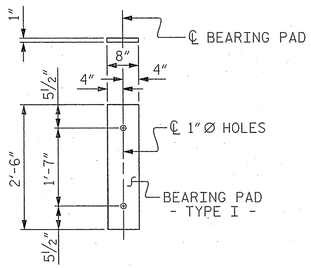

FIXED END
(TYPE I - 18 REQ'D)

ELASTOMERIC BEARING DETAILS

ELASTOMER IN ALL BEARINGS SHALL BE 50 DUROMETER HARDNESS.

GRADE 270 STRANDS	
	0.6" Ø L.R.
AREA (SQUARE INCHES)	0.217
ULTIMATE STRENGTH (LBS. PER STRAND)	58,600
APPLIED PRESTRESS (LBS. PER STRAND)	43,950

DEAD LOAD DEFLECTION AND CAMBER	
	3'-0" x 1'-9"
40' CORED SLAB UNIT	0.6" Ø L.R. STRAND
CAMBER (SLAB ALONE IN PLACE)	1¼" ↑
DEFLECTION DUE TO SUPERIMPOSED DEAD LOAD**	⅛" ↓
FINAL CAMBER	1⅛" ↑

** INCLUDES FUTURE WEARING SURFACE

BAR TYPES

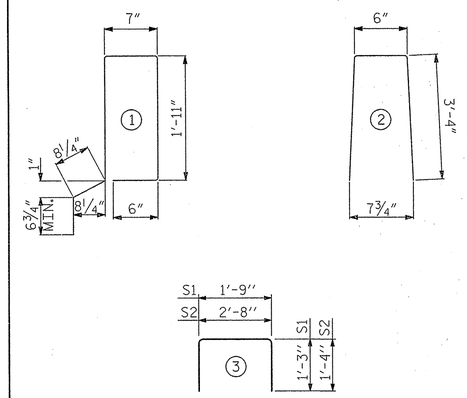

ALL BAR DIMENSIONS ARE OUT TO OUT

NOTES

ALL PRESTRESSING STRANDS SHALL BE 7-WIRE LOW RELAXATION GRADE 270 STRANDS AND SHALL CONFORM TO AASHTO M203 EXCEPT FOR SAMPLING REQUIREMENTS WHICH SHALL BE IN ACCORDANCE WITH THE STANDARD SPECIFICATIONS.

ALL REINFORCING STEEL CAST WITH THE CORED SLAB SECTIONS SHALL BE GRADE 60 AND SHALL BE INCLUDED IN THE UNIT PRICE BID FOR PRESTRESSED CONCRETE CORED SLABS.

RECESSES FOR TRANSVERSE STRANDS SHALL BE GROUTED AFTER THE TENSIONING OF THE STRANDS.

THE 2½" Ø DOWEL HOLES AT FIXED ENDS OF SLAB SECTIONS SHALL BE FILLED WITH NON-SHRINK GROUT.

THE BACKER RODS SHALL CONFORM TO THE REQUIREMENTS OF TYPE M BOND BREAKER. SEE SECTION 1028 OF THE STANDARD SPECIFICATIONS.

WHEN CORED SLABS ARE CAST, AN INTERNAL HOLD-DOWN SYSTEM SHALL BE EMPLOYED TO PREVENT VOIDS FROM RISING OR MOVING SIDEWAYS. AT LEAST SIX WEEKS PRIOR TO CASTING CORED SLABS, THE CONTRACTOR SHALL SUBMIT TO THE ENGINEER FOR REVIEW AND COMMENT, DETAILED DRAWINGS OF THE PROPOSED HOLD-DOWN SYSTEM. IN ADDITION TO STRUCTURAL DETAILS, LOCATION AND SPACING OF THE HOLD-DOWNS SHALL BE INDICATED.

ALL REINFORCING STEEL IN THE VERTICAL CONCRETE BARRIER RAIL SHALL BE EPOXY COATED.

PRESTRESSING STRANDS SHALL BE CUT FLUSH WITH THE CORED SLAB UNIT ENDS.

APPLY EPOXY PROTECTIVE COATING TO CORED SLAB UNIT ENDS.

GROOVED CONTRACTION JOINTS, ½" IN DEPTH, SHALL BE TOOLED IN ALL EXPOSED FACES OF THE BARRIER RAIL AND IN ACCORDANCE WITH ARTICLE 825-10(B) OF THE STANDARD SPECIFICATIONS. A CONTRACTION JOINT SHALL BE LOCATED AT EACH THIRD POINT BETWEEN BARRIER RAIL EXPANSION JOINTS. ONLY ONE CONTRACTION JOINT IS REQUIRED AT MIDPOINT OF BARRIER RAIL SEGMENTS LESS THAN 20 FEET IN LENGTH AND NO CONTRACTION JOINTS ARE REQUIRED FOR THOSE SEGMENTS LESS THAN 10 FEET IN LENGTH.

TRANSVERSE POST TENSIONING OF THE CORED SLAB UNITS SHALL BE DONE IN ACCORDANCE WITH THE STANDARD SPECIFICATIONS.

THE TRANSFER OF LOAD FROM THE ANCHORAGES TO THE CORED SLAB UNIT SHALL BE DONE WHEN THE CONCRETE HAS REACHED A COMPRESSIVE STRENGTH OF NOT LESS THAN THE REQUIRED STRENGTH SHOWN IN THE "CONCRETE RELEASE STRENGTH" TABLE.

FOR GROUT FOR STRUCTURES, SEE SPECIAL PROVISIONS.

BILL OF MATERIAL FOR VERTICAL CONCRETE BARRIER RAIL

BAR	BARS PER PAIR OF EXTERIOR UNITS	TOTAL NO.	SIZE	TYPE	LENGTH	WEIGHT
	40' UNIT					
* B11	40	40	#5	STR	19'-7"	817
* S4	98	98	#5	2	7'-2"	733
* EPOXY COATED REINFORCING STEEL				LBS.		1550
CLASS AA CONCRETE				CU.YDS.		10.5
TOTAL VERTICAL CONCRETE BARRIER RAIL				LN. FT.		80.25

GUTTERLINE ASPHALT THICKNESS & RAIL HEIGHT

24'-10" CLEAR ROADWAY	ASPHALT OVERLAY THICKNESS	RAIL HEIGHT
	@ MID-SPAN	@ MID-SPAN
	SUPERED SECTION	
40' UNITS	2⅝"	3'-8⅞"

CORED SLABS REQUIRED

	NUMBER	LENGTH	TOTAL LENGTH
40' UNIT			
EXTERIOR C.S.	2	40'-0"	80'-0"
INTERIOR C.S.	7	40'-0"	280'-0"
TOTAL	9		360'-0"

BILL OF MATERIAL FOR ONE 40' CORED SLAB UNIT

				EXTERIOR UNIT		INTERIOR UNIT	
BAR	NUMBER	SIZE	TYPE	LENGTH	WEIGHT	LENGTH	WEIGHT
B4	4	#4	STR	20'-9"	55	20'-9"	55
S1	8	#5	3	4'-3"	35	4'-3"	35
S2	84	#4	3	5'-4"	299	5'-4"	299
* S3	49	#5	1	6'-2"	315		
REINFORCING STEEL			LBS.		389		389
* EPOXY COATED REINFORCING STEEL			LBS.		315		
6500 P.S.I. CONCRETE			CU. YDS.		5.8		5.8
0.6" Ø L.R. STRANDS			No.		13		13

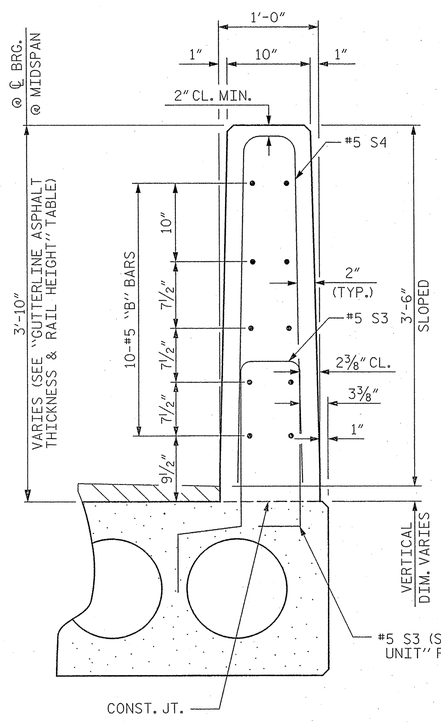

VERTICAL CONCRETE BARRIER RAIL SECTION

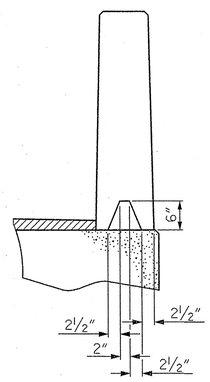

SECTION S-S
AT DAM IN OPEN JOINT
(THIS IS TO BE USED ONLY WHEN SLIP FORM IS USED)

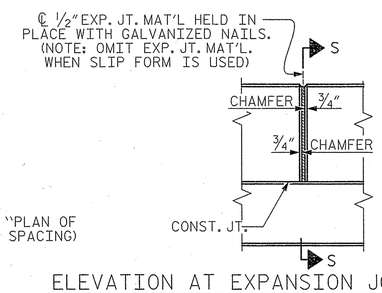

ELEVATION AT EXPANSION JOINTS

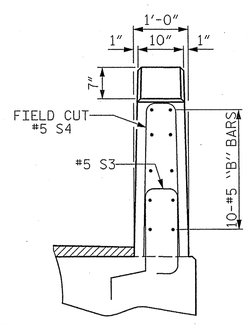

END VIEW

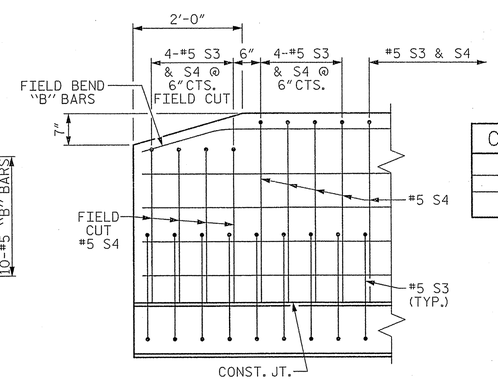

SIDE VIEW

END OF RAIL DETAILS

CONCRETE RELEASE STRENGTH	
UNIT	PSI
40' UNITS	4000

PROJECT NO. 17BP.14.R.29
MACON COUNTY
STATION: 12+22.73 -L-

STATE OF NORTH CAROLINA
DEPARTMENT OF TRANSPORTATION
RALEIGH

STANDARD
3'-0" X 1'-9"
PRESTRESSED CONCRETE
CORED SLAB UNIT
90° SKEW

ASSEMBLED BY :	PFC	DATE :	11/13
CHECKED BY :	CMT	DATE :	11/13
DRAWN BY :	DGE 5/09	REV. 12/11	MAA/AAC
CHECKED BY :	BCH 6/09		

Prepared in the Office of:
Mattern & Craig
CONSULTING ENGINEERS - SURVEYORS
12 BROAD STREET
ASHEVILLE, NORTH CAROLINA 28801
(828) 254-2201 - FAX (828) 254-4562

NORTH CAROLINA PROFESSIONAL SEAL 14309 ENGINEER STEVEN A. CAMPBELL
11/13/13

REVISIONS								SHEET NO.
NO.	BY:	DATE:	NO.	BY:	DATE:			S-6
1			3					TOTAL SHEETS
2			4					13

$$$$$$$SYSTIME$$$$$
$$$$$$$$$$$$$$$$$$$$DGN$$$$$$$$$$$$$$$$$$$$$$$$
$$$$USERNAME$$$$

STD. NO. 21" PCS3_27_90S

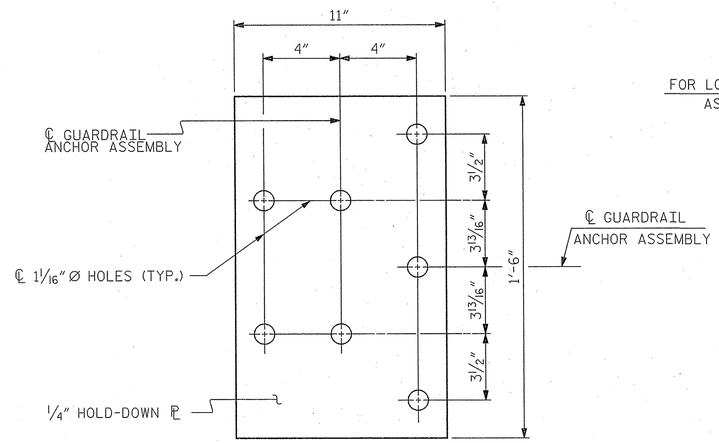

PLAN

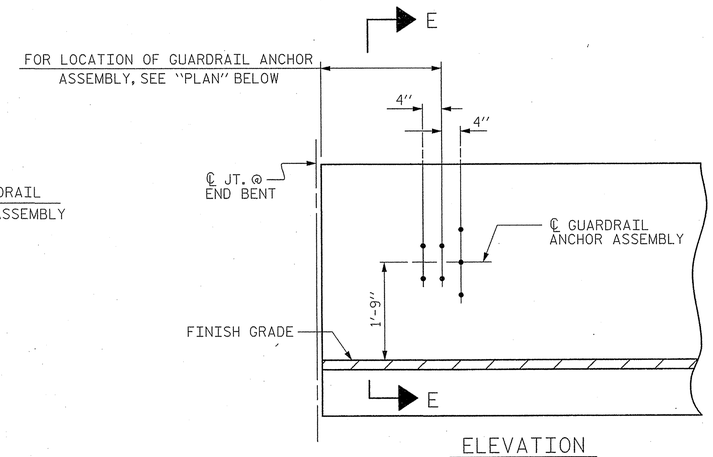

ELEVATION

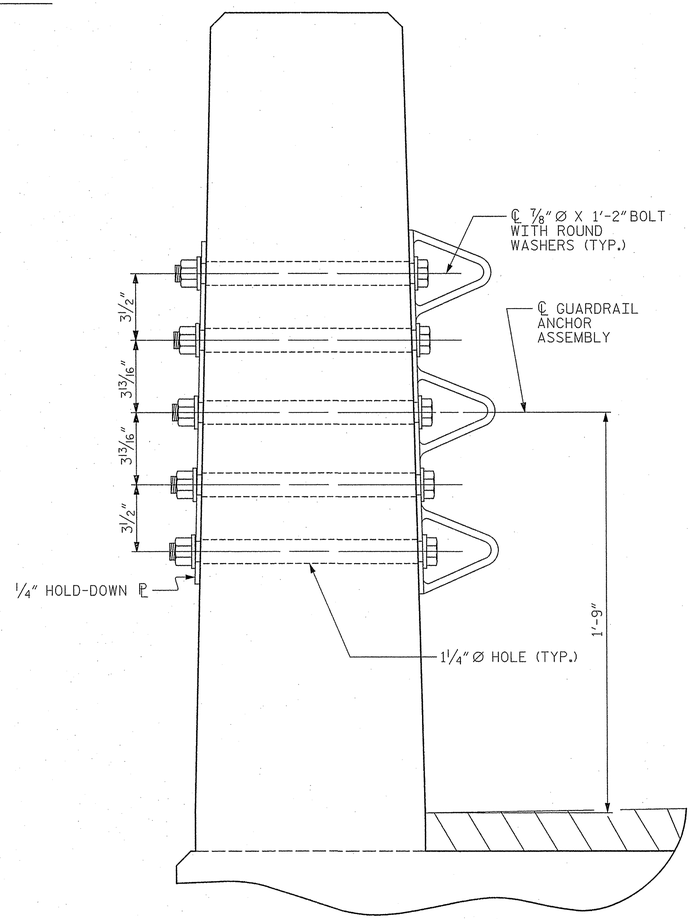

SECTION E-E

GUARDRAIL ANCHOR ASSEMBLY DETAILS

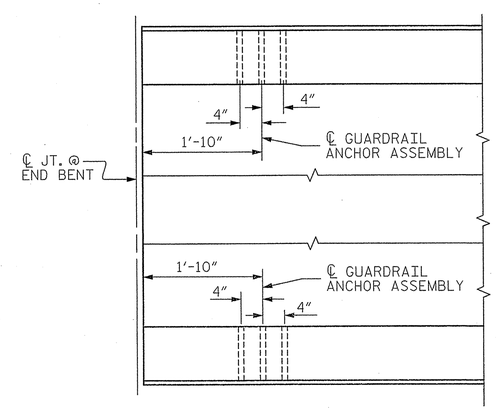

PLAN

LOCATION OF ANCHORS FOR GUARDRAIL

END BENT #1 SHOWN, END BENT #2 SIMILAR.

NOTES

THE GUARDRAIL ANCHOR ASSEMBLY SHALL CONSIST OF A 1/4" HOLD DOWN PLATE AND 7 - 7/8" Ø BOLTS WITH NUTS AND WASHERS.

THE HOLD-DOWN PLATE SHALL CONFORM TO AASHTO M270 GRADE 36. AFTER FABRICATION, THE HOLD-DOWN PLATE SHALL BE HOT-DIP GALVANIZED IN ACCORDANCE WITH AASHTO M111.

BOLTS SHALL CONFORM TO THE REQUIREMENTS OF ASTM A307 AND NUTS SHALL CONFORM TO THE REQUIREMENTS OF AASHTO M291. BOLTS, NUTS AND WASHERS SHALL BE GALVANIZED. (AT THE CONTRACTOR'S OPTION, STAINLESS STEEL BOLTS, NUTS AND WASHERS MAY BE USED AS AN ALTERNATE FOR THE 7/8" Ø GALVANIZED BOLTS, NUTS AND WASHERS. THEY SHALL CONFORM TO OR EXCEED THE MECHANICAL REQUIREMENTS OF ASTM A307. THE USE OF THIS ALTERNATE SHALL BE APPROVED BY THE ENGINEER.)

THE GUARDRAIL ANCHOR ASSEMBLY IS REQUIRED AT ALL POINTS WHERE APPROACH GUARDRAIL IS TO BE ATTACHED TO THE END OF BARRIER RAIL. FOR POINTS OF ATTACHMENT, SEE SKETCH.

AFTER INSTALLATION, THE EXPOSED THREAD OF THE BOLT SHALL BE BURRED WITH A SHARP POINTED TOOL.

THE COST OF THE GUARDRAIL ANCHOR ASSEMBLY SHALL BE INCLUDED IN THE UNIT CONTRACT PRICE BID FOR VERTICAL CONCRETE BARRIER RAIL.

THE VERTICAL REINFORCING BARS MAY BE SHIFTED SLIGHTLY IN THE VERTICAL CONCRETE BARRIER RAIL TO CLEAR ASSEMBLY BOLTS.

THE 1 1/4" Ø HOLES SHALL BE FORMED OR DRILLED WITH A CORE BIT. IMPACT TOOLS WILL NOT BE PERMITTED. ANY CONCRETE DAMAGED BY THIS WORK SHALL BE REPAIRED TO THE SATISFACTION OF THE ENGINEER.

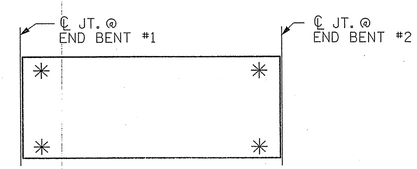

SKETCH SHOWING POINTS OF ATTACHMENT

✳ DENOTES GUARDRAIL ANCHOR ASSEMBLY

PROJECT NO. 17BP.14.R.29

MACON COUNTY

STATION: 12+22.73 -L-

STATE OF NORTH CAROLINA
DEPARTMENT OF TRANSPORTATION
RALEIGH

STANDARD
GUARDRAIL ANCHORAGE FOR VERTICAL CONCRETE BARRIER RAIL

ASSEMBLED BY : PFC	DATE : 11/13		
CHECKED BY : CMT	DATE : 11/13		
DRAWN BY : MAA 5/10	ADDED 5/6/10		
CHECKED BY : GM 5/10	REV. 10/1/11	MAA/GM	
	REV. 12/5/11	MAA/GM	

Prepared in the Office of:
Mattern & Craig
CONSULTING ENGINEERS - SURVEYORS
12 BROAD STREET
ASHEVILLE, NORTH CAROLINA 28801
(828) 254-2201 - FAX (828) 254-4562

NORTH CAROLINA PROFESSIONAL SEAL 14309 ENGINEER STEVEN A. CAMPBELL
11/13/13

REVISIONS						
NO.	BY:	DATE:	NO.	BY:	DATE:	
1			3			
2			4			

SHEET NO. S-7
TOTAL SHEETS 13

(SHT 1) STD. NO. GRA3

$$$$$$SYSTIME$$$$$
$$$$$$$$$$$$$$$$$$$$$$$$DGN$$$$$$$$$$$$$$$$$$$$$$$$
$$$$USERNAME$$$$

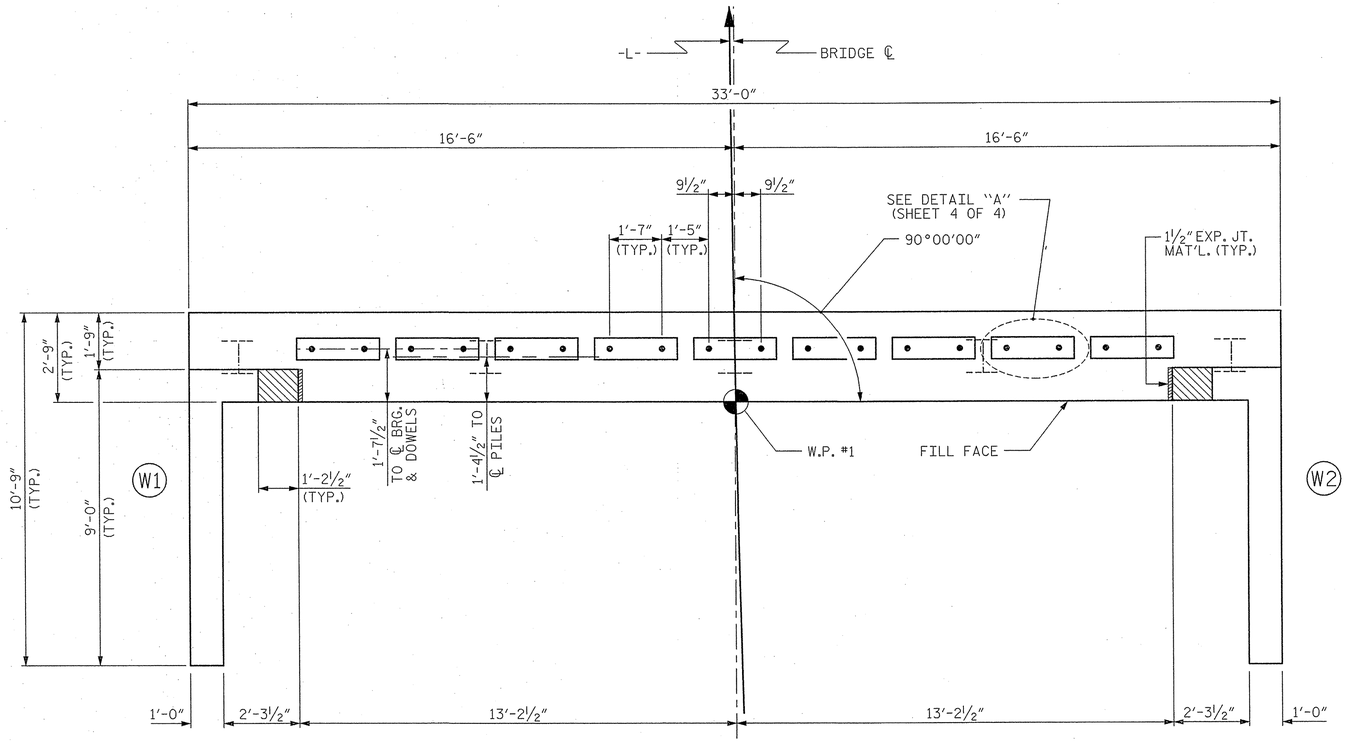

PLAN

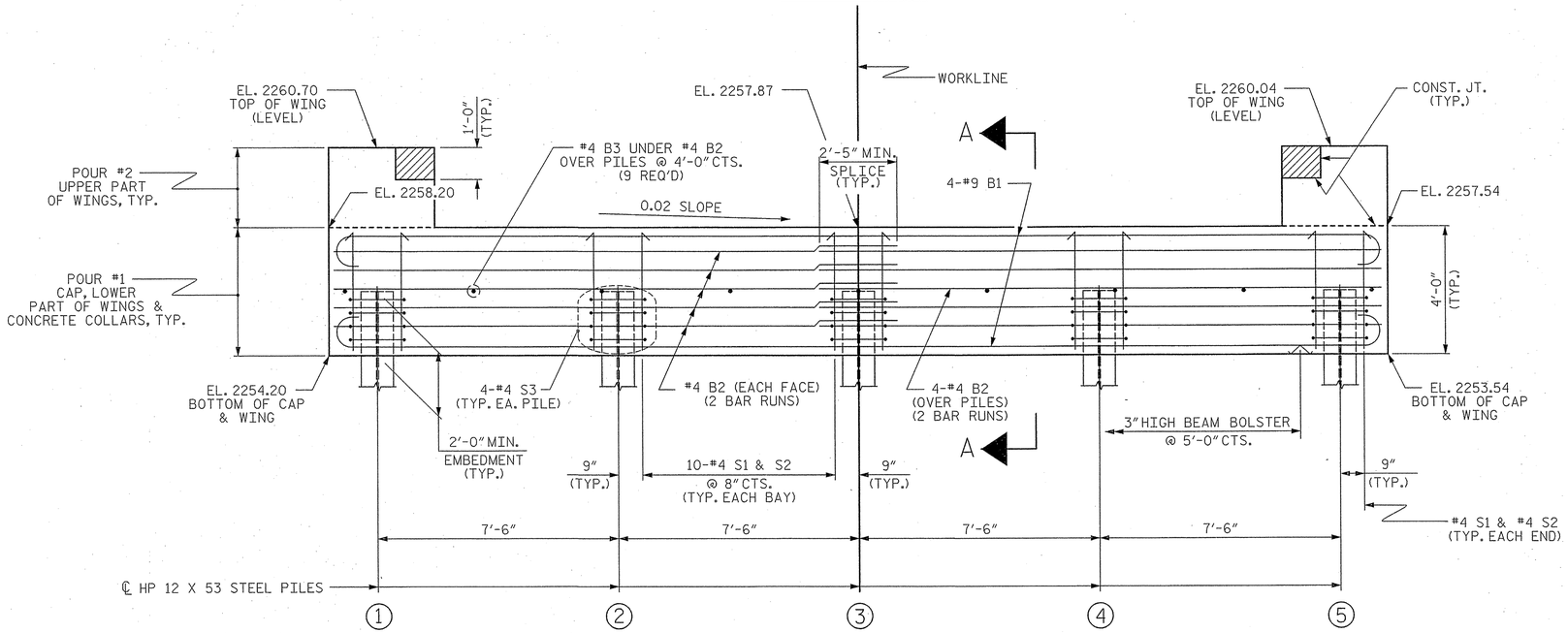

ELEVATION

WINGS NOT SHOWN FOR CLARITY.
FOR SECTION A-A, SEE SHEET 4 OF 4.
CONCRETE COLLARS FOR STEEL PILES NOT SHOWN IN PLAN AND ELEVATION VIEWS FOR CLARITY.
SEE "CORROSION PROTECTION FOR STEEL PILES DETAIL", SHEET 4 OF 4.

NOTES

STIRRUPS IN CAP MAY BE SHIFTED AS NECESSARY TO CLEAR DOWELS.

THE CONCRETE IN THE SHADED AREA OF THE WING SHALL BE POURED AFTER THE VERTICAL CONCRETE BARRIER RAIL IS CAST IF SLIP FORMING IS USED.

FOR PILE SPLICE DETAILS, SEE SHEET 4 OF 4.

FOR WING DETAILS, SEE SHEET 3 OF 4.

TOP OF PILE ELEVATIONS	
1	2256.17
2	2256.02
3	2255.87
4	2255.72
5	2255.57

PROJECT NO. 17BP.14.R.29
MACON COUNTY
STATION: 12+22.73 -L-

SHEET 1 OF 4

STATE OF NORTH CAROLINA
DEPARTMENT OF TRANSPORTATION
RALEIGH

SUBSTRUCTURE

END BENT No. 1

ASSEMBLED BY :	PFC	DATE :	11/13
CHECKED BY :	CMT	DATE :	11/13
DRAWN BY :	DGE	02/10	
CHECKED BY :	MKT	02/10	

Prepared in the Office of:
Mattern & Craig
CONSULTING ENGINEERS ~ SURVEYORS
12 BROAD STREET
ASHEVILLE, NORTH CAROLINA 28801
(828) 254-2201 - FAX (828) 254-4562

NORTH CAROLINA PROFESSIONAL SEAL 14309 ENGINEER STEVEN A. CAMPBELL
11/13

REVISIONS						SHEET NO.
NO.	BY:	DATE:	NO.	BY:	DATE:	S-8
1			3			TOTAL SHEETS
2			4			13

STD. NO. EB_27_90S4

$$$$$$SYSTIME$$$$$
$$$$$$$$$$$$$$$$$$$$$$$$DGN$$$$$$$$$$$$$$$$$$$$$$$$
$$$$USERNAME$$$$

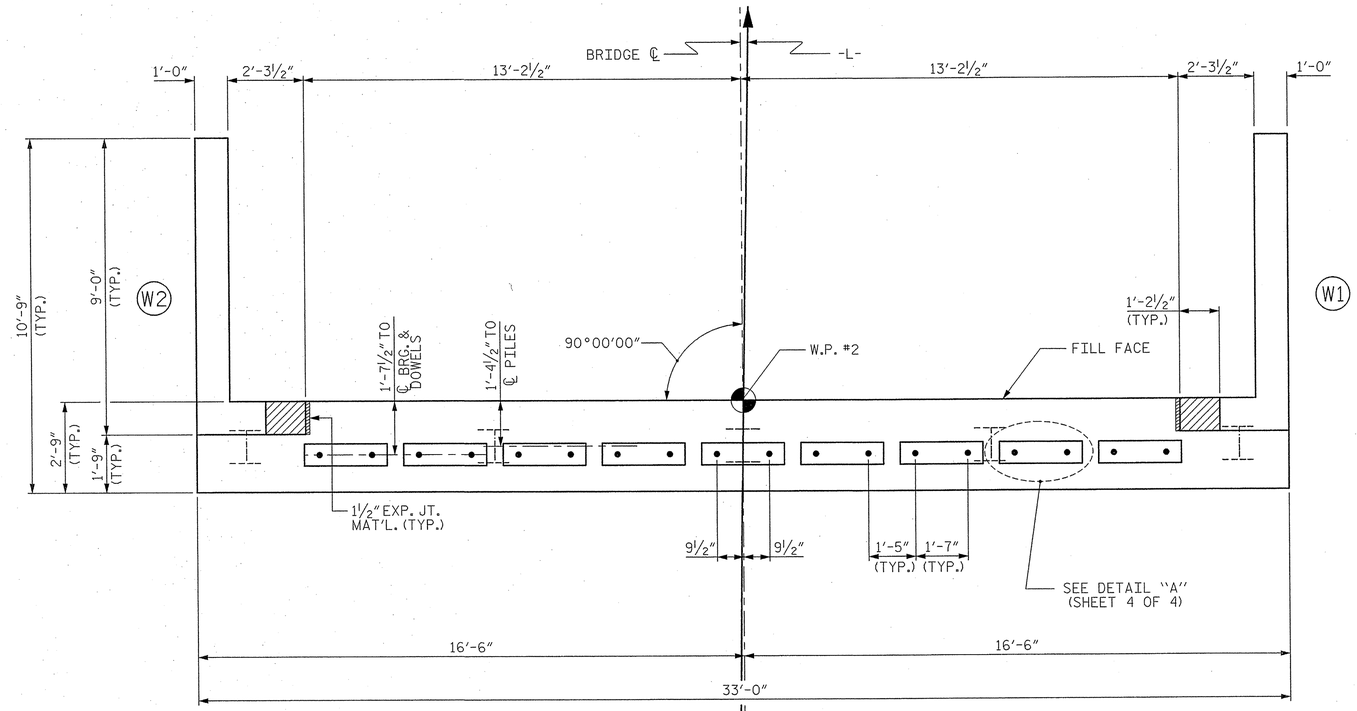

PLAN

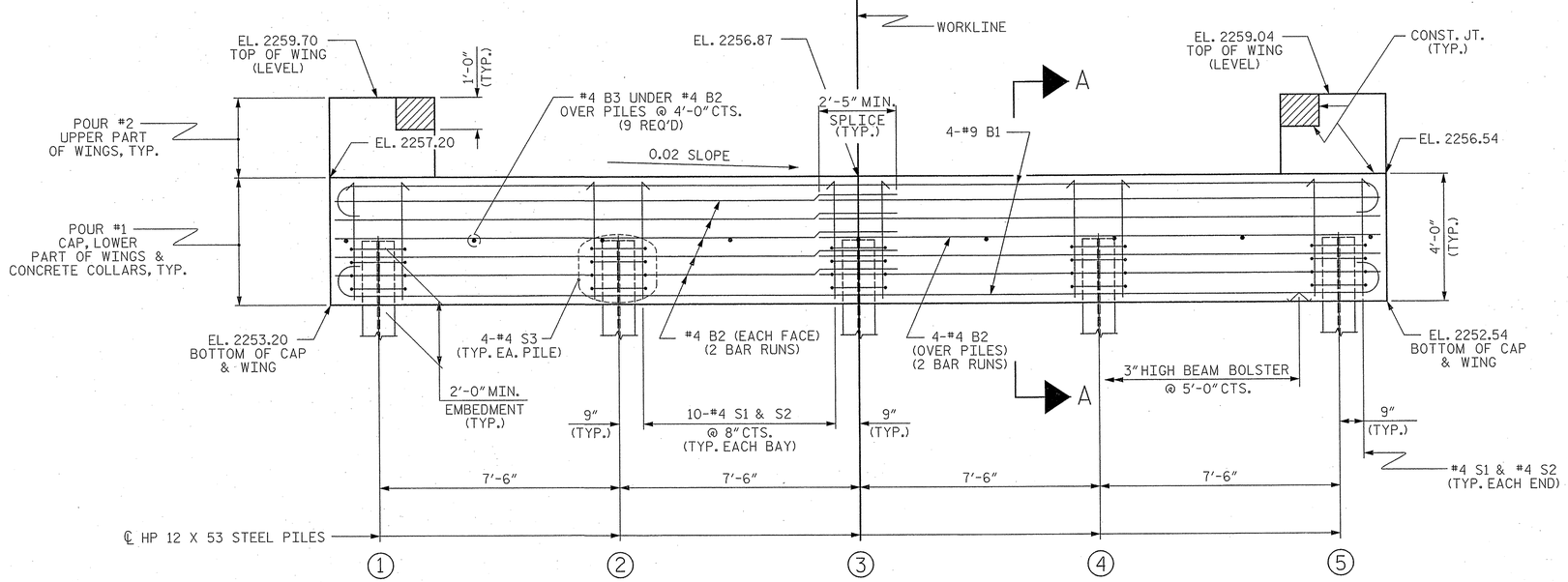

ELEVATION

WINGS NOT SHOWN FOR CLARITY.
FOR SECTION A-A, SEE SHEET 4 OF 4.
CONCRETE COLLARS FOR STEEL PILES NOT SHOWN IN PLAN AND ELEVATION VIEWS FOR CLARITY.
SEE "CORROSION PROTECTION FOR STEEL PILES DETAIL", SHEET 4 OF 4.

NOTES

STIRRUPS IN CAP MAY BE SHIFTED AS NECESSARY TO CLEAR DOWELS.

THE CONCRETE IN THE SHADED AREA OF THE WING SHALL BE POURED AFTER THE VERTICAL CONCRETE BARRIER RAIL IS CAST IF SLIP FORMING IS USED.

FOR PILE SPLICE DETAILS, SEE SHEET 4 OF 4.

FOR WING DETAILS, SEE SHEET 3 OF 4.

TOP OF PILE ELEVATIONS	
1	2255.17
2	2255.02
3	2254.87
4	2254.72
5	2254.57

PROJECT NO. 17BP.14.R.29
MACON COUNTY
STATION: 12+22.73 -L-

SHEET 2 OF 4

STATE OF NORTH CAROLINA
DEPARTMENT OF TRANSPORTATION
RALEIGH

SUBSTRUCTURE

END BENT No. 2

ASSEMBLED BY :	PFC	DATE :	11/13
CHECKED BY :	CMT	DATE :	11/13
DRAWN BY :	DGE	02/10	
CHECKED BY :	MKT	02/10	

Prepared in the Office of:
Mattern & Craig
CONSULTING ENGINEERS - SURVEYORS
12 BROAD STREET
ASHEVILLE, NORTH CAROLINA 28801
(828) 254-2201 - FAX (828) 254-4562

NORTH CAROLINA PROFESSIONAL SEAL 14309 ENGINEER STEVEN A. CAMPBELL 11/13/13

REVISIONS						SHEET NO.
NO.	BY:	DATE:	NO.	BY:	DATE:	S-9
1			3			TOTAL SHEETS
2			4			13

STD. NO. EB_27_90S4

$$$$$$$SYSTIME$$$$$
$$$$$$$$$$$$$$$$$$$$DGN$$$$$$$$$$$$$$$$$$$$$$$$
$$$$USERNAME$$$$$

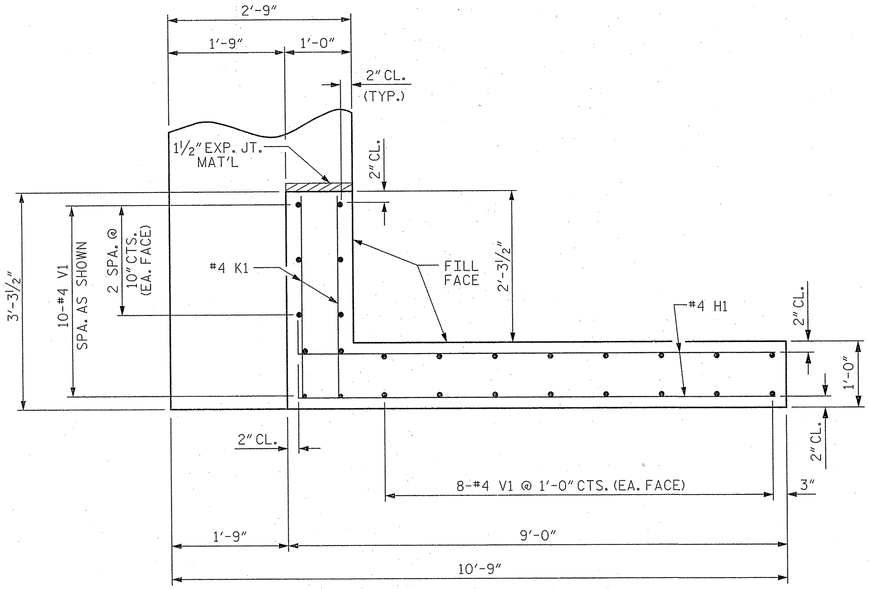

PLAN OF WING (W1)

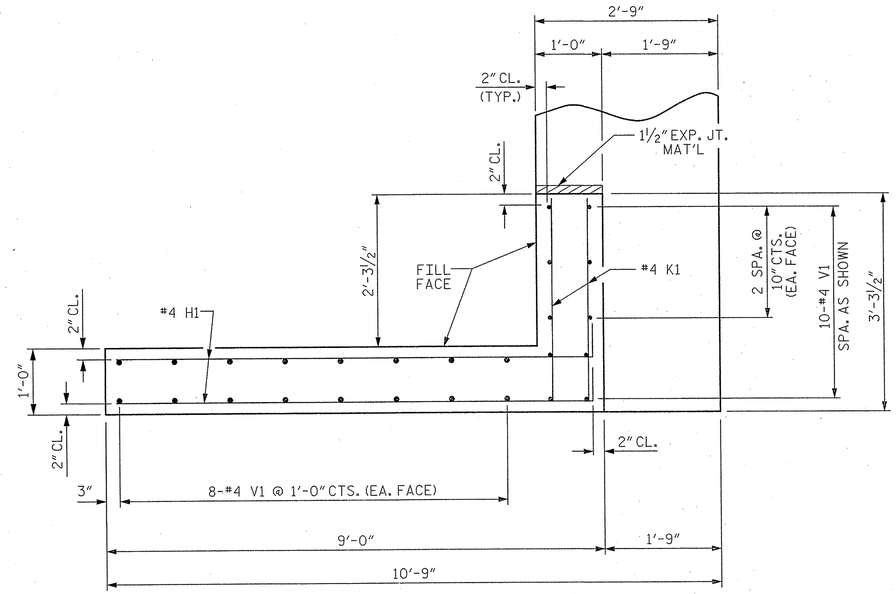

PLAN OF WING (W2)

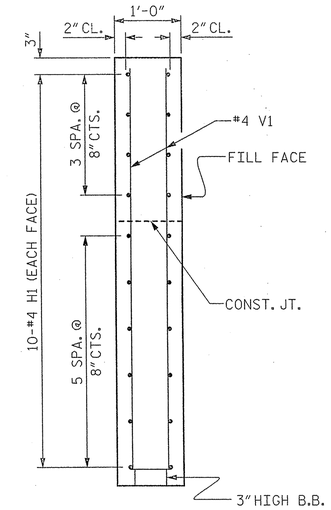

SECTION X-X

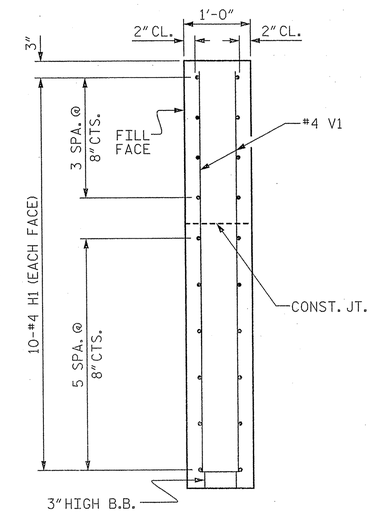

SECTION Y-Y

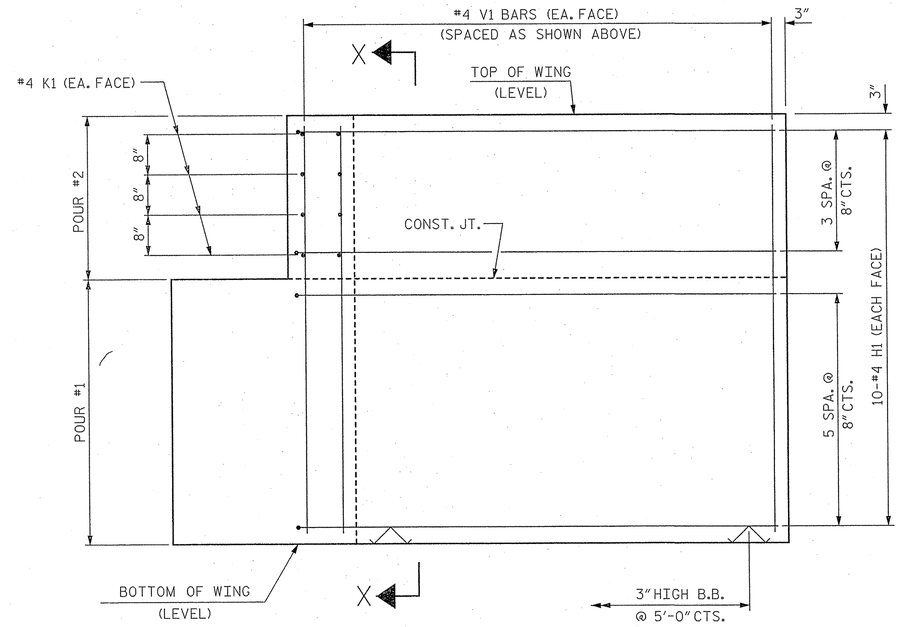

ELEVATION OF WING (W1)

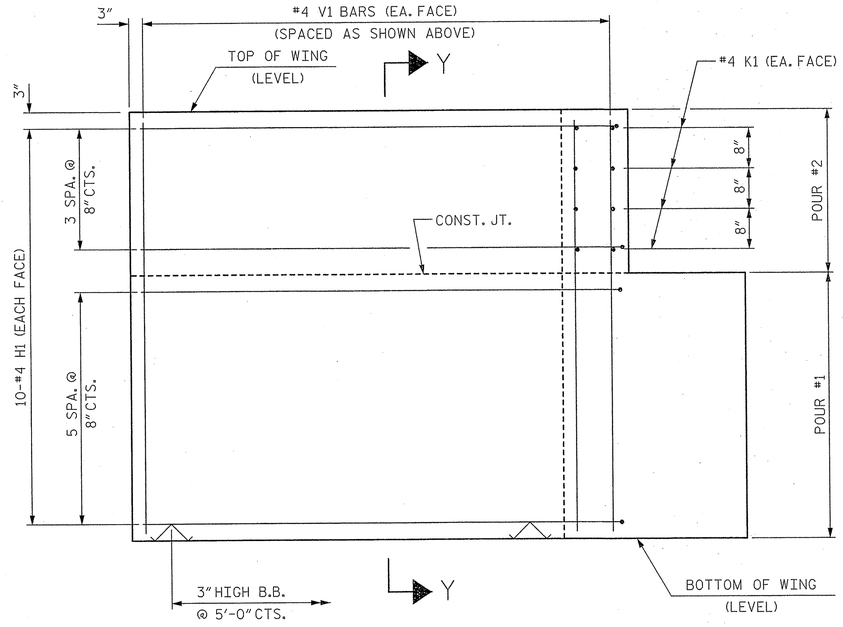

ELEVATION OF WING (W2)

WING DETAILS

PROJECT NO. 17BP.14.R.29

MACON COUNTY

STATION: 12+22.73 -L-

SHEET 3 OF 4

STATE OF NORTH CAROLINA
DEPARTMENT OF TRANSPORTATION
RALEIGH

SUBSTRUCTURE

END BENT
WING DETAILS

ASSEMBLED BY : PFC	DATE : 11/13		
CHECKED BY : CMT	DATE : 11/13		
DRAWN BY : DGE 02/10			
CHECKED BY : MKT 02/10			

Prepared in the Office of:
Mattern & Craig
CONSULTING ENGINEERS - SURVEYORS
12 BROAD STREET
ASHEVILLE, NORTH CAROLINA 28801
(828) 254-2201 - FAX (828) 254-4562

NORTH CAROLINA PROFESSIONAL SEAL 14309 ENGINEER STEVEN A. CAMPBELL
11/12/13

REVISIONS							
NO.	BY:	DATE:	NO.	BY:	DATE:	SHEET NO.	S-10
1			3			TOTAL SHEETS	13
2			4				

STD. NO. EB_27_90S4

$$$$$$$SYSTIME$$$$$
$$$$$$$$$$$$$$$$$$$$$$$$DGN$$$$$$$$$$$$$$$$$$$$$$$$
$$$$USERNAME$$$$

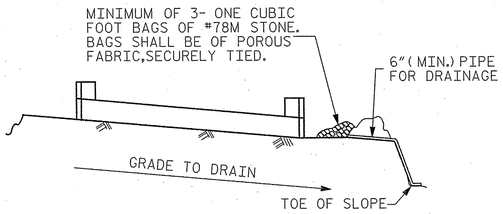

BAGGED STONE AND PIPE SHALL BE PLACED IMMEDIATELY AFTER COMPLETION OF END BENT EXCAVATION. PIPE MAY BE EITHER CONCRETE, CORRUGATED STEEL, CORRUGATED ALUMINUM ALLOY, OR CORRUGATED PLASTIC. PERFORATED PIPE WILL NOT BE ALLOWED.

BAGGED STONE SHALL REMAIN IN PLACE UNTIL THE ENGINEER DIRECTS THAT IT BE REMOVED. THE CONTRACTOR SHALL REMOVE AND DISPOSE OF SILT ACCUMULATIONS AT BAGGED STONE WHEN SO DIRECTED BY THE ENGINEER. BAGS SHALL BE REMOVED AND REPLACED WHENEVER THE ENGINEER DETERMINES THAT THEY HAVE DETERIORATED AND LOST THEIR EFFECTIVENESS.

NO SEPARATE PAYMENT WILL BE MADE FOR THIS WORK AND THE ENTIRE COST OF THIS WORK SHALL BE INCLUDED IN THE UNIT CONTRACT PRICE BID FOR THE SEVERAL PAY ITEMS.

TEMPORARY DRAINAGE AT END BENT

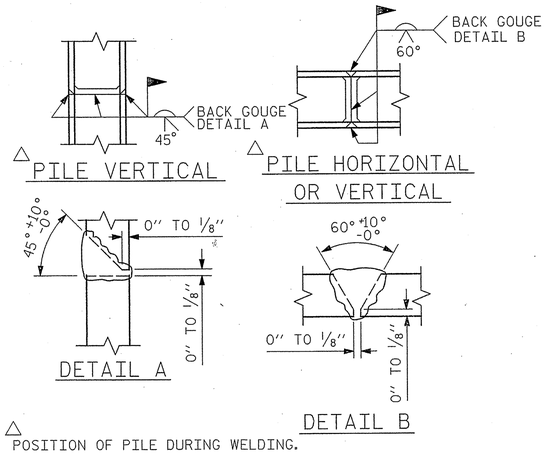

△ POSITION OF PILE DURING WELDING.

PILE SPLICE DETAILS

SCALE- 7/16" = 1'-0"

BAR TYPES

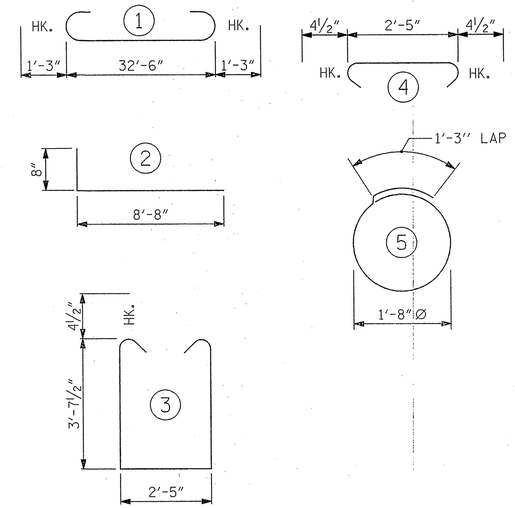

ALL BAR DIMENSIONS ARE OUT TO OUT.

END BENT No. 1	END BENT No. 2
HP 12 X 53 STEEL PILES	HP 12 X 53 STEEL PILES
NO: 5 LIN. FT.= 275	NO: 5 LIN. FT.= 230
STEEL PILE POINTS NO: 5	STEEL PILE POINTS NO: 5

BILL OF MATERIAL FOR ONE END BENT

BAR	NO.	SIZE	TYPE	LENGTH	WEIGHT
B1	8	#9	1	35'-0"	952
B2	28	#4	STR	17'-7"	329
B3	9	#4	STR	2'-5"	15
D1	18	#6	STR	1'-6"	41
H1	40	#4	2	9'-4"	249
K1	16	#4	STR	2'-11"	31
S1	42	#4	3	10'-5"	292
S2	42	#4	4	3'-2"	89
S3	20	#4	5	6'-6"	87
V1	52	#4	STR	6'-6"	214

REINFORCING STEEL (FOR ONE END BENT) 2299 LBS.

CLASS A CONCRETE BREAKDOWN (FOR ONE END BENT)

POUR #1 CAP, LOWER PART OF WINGS & COLLARS 16.7 C.Y.

POUR #2 UPPER PART OF WINGS 2.1 C.Y.

TOTAL CLASS A CONCRETE 18.8 C.Y.

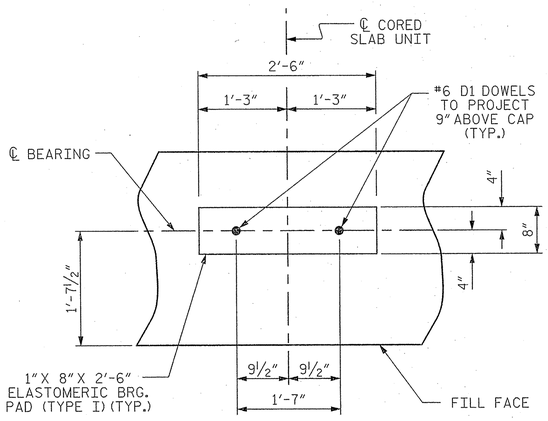

DETAIL "A"

(END BENT No. 1 SHOWN, END BENT No. 2 SIMILAR BY ROTATION)

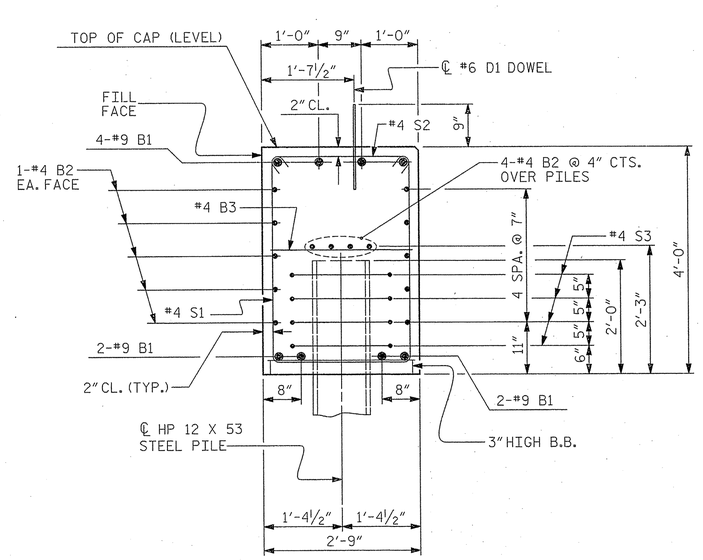

SECTION A-A

(CONCRETE COLLAR NOT SHOWN FOR CLARITY. SEE "CORROSION PROTECTION FOR STEEL PILES DETAIL.")

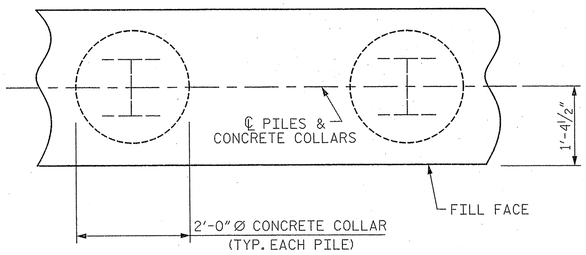

PLAN

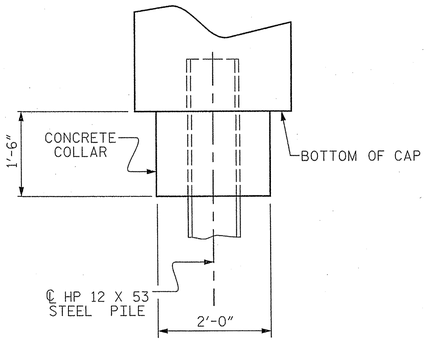

ELEVATION

CORROSION PROTECTION FOR STEEL PILES DETAIL

(END BENT No. 1 SHOWN, END BENT No. 2 SIMILAR BY ROTATION)

PROJECT NO. 17BP.14.R.29

MACON COUNTY

STATION: 12+22.73 -L-

SHEET 4 OF 4

STATE OF NORTH CAROLINA
DEPARTMENT OF TRANSPORTATION
RALEIGH

SUBSTRUCTURE

END BENT No. 1 & 2 DETAILS

ASSEMBLED BY :	PFC	DATE :	11/13
CHECKED BY :	CMT	DATE :	11/13
DRAWN BY :	DGE	02/10	
CHECKED BY :	MKT	02/10	

Prepared in the Office of: Mattern & Craig
CONSULTING ENGINEERS - SURVEYORS
12 BROAD STREET
ASHEVILLE, NORTH CAROLINA 28801
(828) 254-2201 - FAX (828) 254-4562

NORTH CAROLINA PROFESSIONAL SEAL 14309 ENGINEER STEVEN A. CAMPBELL 11/13

REVISIONS						SHEET NO.
NO.	BY:	DATE:	NO.	BY:	DATE:	S-11
1			3			TOTAL SHEETS
2			4			13

STD. NO. EB_27_90S

$$$$$$SYSTIME$$$$$
$$$$$$$$$$$$$$$$$$$$$$DGN$$$$$$$$$$$$$$$$$$$$$$$$
$$$$USERNAME$$$$

NOTES :

FOR BERM WIDTH DIMENSIONS, SEE GENERAL DRAWING.

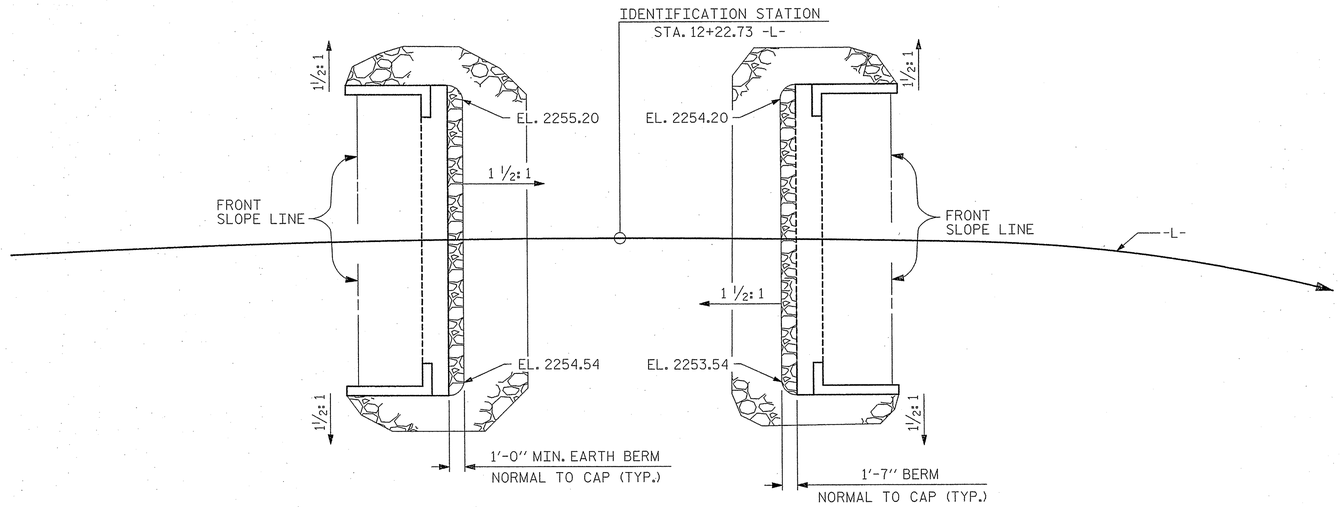

PLAN

ESTIMATED QUANTITIES		
BRIDGE @ STA. 12+22.73	RIP RAP CLASS II (2'-0" THICK)	GEOTEXTILE FOR DRAINAGE
	TONS	SQUARE YARDS
END BENT 1	47	52
END BENT 2	40	44

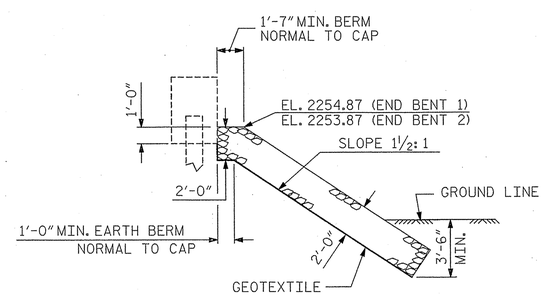

NOTE: SEE PLAN FOR ELEVATIONS

℄ SECTION

BERM RIP RAPPED

PROJECT NO. 17BP.14.R.29

MACON COUNTY

STATION: 12+22.73 -L-

STATE OF NORTH CAROLINA
DEPARTMENT OF TRANSPORTATION
RALEIGH

STANDARD

RIP RAP DETAILS

ASSEMBLED BY : PFC	DATE : 11/13
CHECKED BY : CMT	DATE : 11/13
DRAWN BY : REK 1/84	REV. 5/1/06R TLA/GM
CHECKED BY : RDU 1/84	REV. 10/1/11 MAA/GM
	REV. 12/21/11 MAA/GM

Prepared in the Office of:
Mattern & Craig
CONSULTING ENGINEERS - SURVEYORS
12 BROAD STREET
ASHEVILLE, NORTH CAROLINA 28801
(828) 254-2201 - FAX (828) 254-4562

NORTH CAROLINA PROFESSIONAL SEAL 14309 ENGINEER STEVEN A. CAMPBELL 11/12/13

REVISIONS								SHEET NO.
NO.	BY:	DATE:	NO.	BY:	DATE:			S-12
1			3					TOTAL SHEETS
2			4					13

$$$$$$SYSTIME$$$$$
$$$$$$$$$$$$$$$$$$$$$$$$DGN$$$$$$$$$$$$$$$$$$$$$$$$$
$$$$USERNAME$$$$$

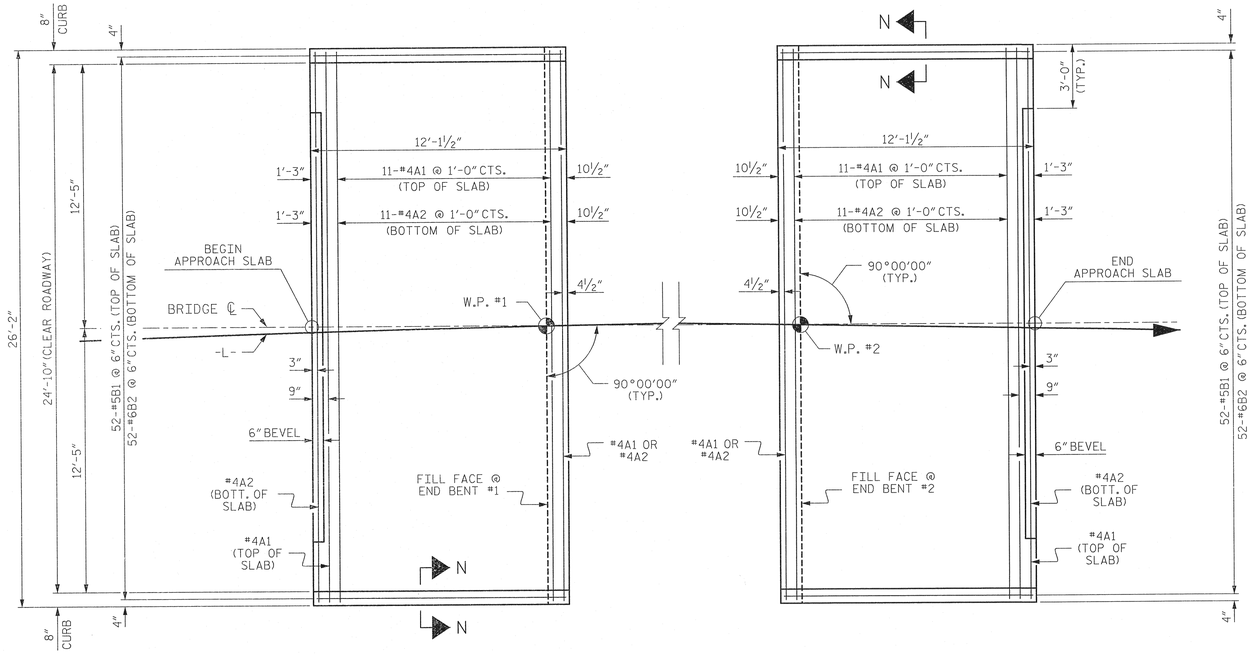

PLAN @ END BENT #1

PLAN @ END BENT #2

DIMENSIONS SHOWN ARE TYPICAL FOR BOTH APPROACH SLABS

NOTES

FOR BRIDGE APPROACH FILL INCLUDING GEOTEXTILE, 4"Ø DRAINAGE PIPE, AND #78M STONE BACKFILL, SEE ROADWAY PLANS.

GEOTEXTILE SHALL BE TYPE 1IN ACCORDANCE WITH THE STANDARD SPECIFICATIONS SECTION 1056.

#78M STONE BACKFILL (CLASS V SELECT MATERIAL) SHALL BE IN ACCORDANCE WITH STANDARD SPECIFICATIONS SECTION 1016.

#78M STONE BACKFILL IS TO BE CONTINUOUS ALONG FILL FACE OF BACKWALL FROM OUTSIDE EDGE TO OUTSIDE EDGE OF APPROACH SLAB.

FOR THE 4"Ø DRAINAGE PIPE OUTLET(S), SEE ROADWAY STANDARD DRAWINGS.

AREA BETWEEN THE WINGWALL AND APPROACH SLAB SHALL BE GRADED TO DRAIN THE WATER AWAY FROM THE FILL FACE OF THE BRIDGE AND SHALL BE PAVED. SEE ROADWAY PLANS.

APPROACH SLAB GROOVING IS NOT REQUIRED.

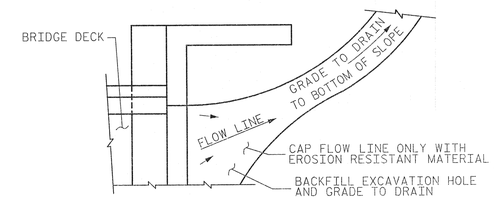

NOTE: IF THE APPROACH SLAB IS NOT CONSTRUCTED IMMEDIATELY AFTER THE BACKFILLING OF THE END BENT EXCAVATION, GRADE TO DRAIN TO THE BOTTOM OF THE SLOPE AND PROVIDE EROSION RESISTANT MATERIAL, SUCH AS FIBERGLASS ROVING OR AS DIRECTED BY THE ENGINEER TO PREVENT SOIL EROSION AND TO PROTECT THE AREA ADJACENT TO THE STRUCTURE. THE CONTRACTOR WILL BE REQUIRED TO REMOVE THESE MATERIALS PRIOR TO CONSTRUCTION OF THE APPROACH SLAB.

BILL OF MATERIAL

APPROACH SLAB AT EB #1

BAR	NO.	SIZE	TYPE	LENGTH	WEIGHT
* A1	13	#4	STR	25'-10"	224
A2	13	#4	STR	25'-10"	224
* B1	52	#5	STR	11'-2"	606
B2	52	#6	STR	11'-8"	911
REINFORCING STEEL				LBS.	1135
* EPOXY COATED REINFORCING STEEL				LBS.	830
CLASS AA CONCRETE				C.Y.	15.2

APPROACH SLAB AT EB #2

BAR	NO.	SIZE	TYPE	LENGTH	WEIGHT
* A1	13	#4	STR	25'-10"	224
A2	13	#4	STR	25'-10"	224
* B1	52	#5	STR	11'-2"	606
B2	52	#6	STR	11'-8"	911
REINFORCING STEEL				LBS.	1135
* EPOXY COATED REINFORCING STEEL				LBS.	830
CLASS AA CONCRETE				C.Y.	15.2

SPLICE LENGTHS

BAR SIZE	EPOXY COATED	UNCOATED
#4	2'-0"	1'-9"
#5	2'-6"	2'-2"
#6	3'-10"	2'-7"

TEMPORARY DRAINAGE DETAIL

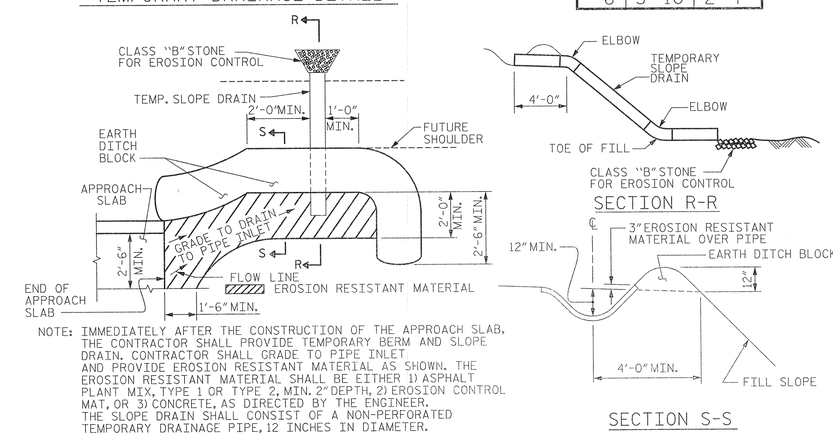

NOTE: IMMEDIATELY AFTER THE CONSTRUCTION OF THE APPROACH SLAB, THE CONTRACTOR SHALL PROVIDE TEMPORARY BERM AND SLOPE DRAIN. CONTRACTOR SHALL GRADE TO PIPE INLET AND PROVIDE EROSION RESISTANT MATERIAL AS SHOWN. THE EROSION RESISTANT MATERIAL SHALL BE EITHER 1) ASPHALT PLANT MIX, TYPE 1 OR TYPE 2, MIN. 2" DEPTH, 2) EROSION CONTROL MAT, OR 3) CONCRETE, AS DIRECTED BY THE ENGINEER. THE SLOPE DRAIN SHALL CONSIST OF A NON-PERFORATED TEMPORARY DRAINAGE PIPE, 12 INCHES IN DIAMETER.

PLAN VIEW

TEMPORARY BERM AND SLOPE DRAIN DETAILS

(TO BE USED WHEN SHOULDER BERM GUTTER IS REQUIRED)

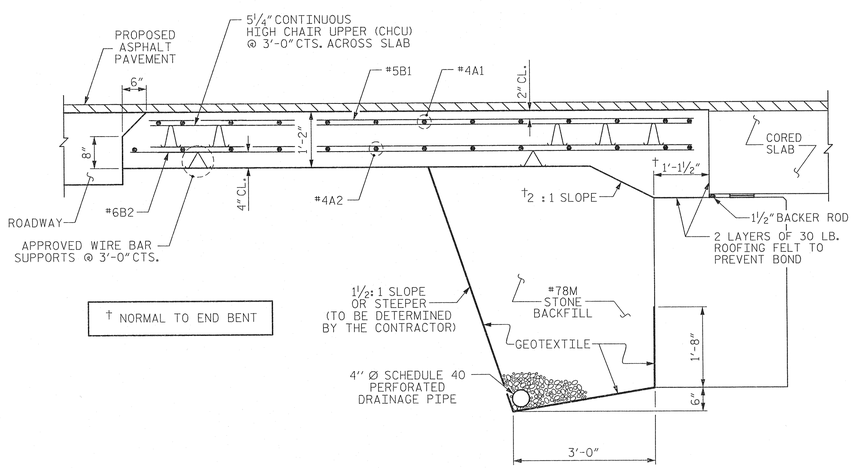

SECTION THRU SLAB

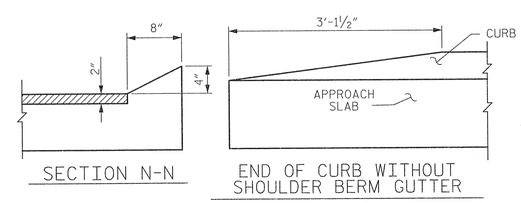

SECTION N-N

END OF CURB WITHOUT SHOULDER BERM GUTTER

CURB DETAILS

PROJECT NO. 17BP.14.R.29

MACON COUNTY

STATION: 12+22.73 -L-

STATE OF NORTH CAROLINA
DEPARTMENT OF TRANSPORTATION
RALEIGH

STANDARD
BRIDGE APPROACH SLAB
FOR PRESTRESSED CONCRETE
CORED SLAB UNIT
(SUB-REGIONAL TIER)
90° SKEW

NORTH CAROLINA PROFESSIONAL SEAL 14308 ENGINEER STEVEN A. CAMPBELL 11/12/13

Prepared in the Office of: Mattern & Craig
CONSULTING ENGINEERS - SURVEYORS
12 BROAD STREET
ASHEVILLE, NORTH CAROLINA 28801
(828) 254-2201 - FAX (828) 254-4562

REVISIONS						SHEET NO.
NO.	BY:	DATE:	NO.	BY:	DATE:	S-13
1			3			TOTAL SHEETS
2			4			13

ASSEMBLED BY :	PFC	DATE :	11/13
CHECKED BY :	CMT	DATE :	11/13
DRAWN BY : SHS/MAA 5-09	REV. 12-11	MAA/AAC	
CHECKED BY : BCH 5-09			

$$$$$$$SYSTIME$$$$$
$$$$$$$$$$$$$$$$$$$$$$$$DGN$$$$$$$$$$$$$$$$$$$$$$$
$$$$USERNAME$$$$

STD. NO. BAS_27_90S

STANDARD NOTES

DESIGN DATA:

SPECIFICATIONS	A.A.S.H.T.O. (CURRENT)
LIVE LOAD	SEE PLANS
IMPACT ALLOWANCE	SEE A.A.S.H.T.O.
STRESS IN EXTREME FIBER OF	
STRUCTURAL STEEL - AASHTO M270 GRADE 36	20,000 LBS. PER SQ. IN.
- AASHTO M270 GRADE 50W	27,000 LBS. PER SQ. IN.
- AASHTO M270 GRADE 50	27,000 LBS. PER SQ. IN.
REINFORCING STEEL IN TENSION	
GRADE 60	24,000 LBS. PER SQ. IN.
CONCRETE IN COMPRESSION	1,200 LBS. PER SQ. IN.
CONCRETE IN SHEAR	SEE A.A.S.H.T.O.
STRUCTURAL TIMBER - TREATED OR	
UNTREATED - EXTREME FIBER STRESS	1,800 LBS. PER SQ. IN.
COMPRESSION PERPENDICULAR TO GRAIN OF TIMBER	375 LBS. PER SQ. IN.
EQUIVALENT FLUID PRESSURE OF EARTH	30 LBS. PER CU. FT. (MINIMUM)

MATERIAL AND WORKMANSHIP:

EXCEPT AS MAY OTHERWISE BE SPECIFIED ON PLANS OR IN THE SPECIAL PROVISIONS, ALL MATERIAL AND WORKMANSHIP SHALL BE IN ACCORDANCE WITH THE 2012 "STANDARD SPECIFICATIONS FOR ROADS AND STRUCTURES" OF THE N. C. DEPARTMENT OF TRANSPORTATION.

STEEL SHEET PILING FOR PERMANENT OR TEMPORARY APPLICATIONS SHALL BE HOT ROLLED.

CONCRETE:

UNLESS OTHERWISE REQUIRED ON PLANS, CLASS A CONCRETE SHALL BE USED FOR ALL PORTIONS OF ALL STRUCTURES WITH THE EXCEPTION THAT: CLASS AA CONCRETE SHALL BE USED IN BRIDGE SUPERSTRUCTURES, ABUTMENT BACKWALLS, AND APPROACH SLABS; AND CLASS B CONCRETE SHALL BE USED FOR SLOPE PROTECTION AND RIP RAP.

CONCRETE CHAMFERS:

UNLESS OTHERWISE NOTED ON THE PLANS, ALL EXPOSED CORNERS ON STRUCTURES SHALL BE CHAMFERED 3/4" WITH THE FOLLOWING EXCEPTIONS: TOP CORNERS OF CURBS MAY BE ROUNDED TO 1-1/2" RADIUS WHICH IS BUILT INTO CURB FORMS; CORNERS OF TRANSVERSE FLOOR EXPANSION JOINTS SHALL BE ROUNDED WITH A 1/4" FINISHING TOOL UNLESS OTHERWISE REQUIRED ON PLANS; AND CORNERS OF EXPANSION JOINTS IN THE ROADWAY FACES AND TOPS OF CURBS AND SIDEWALKS SHALL BE ROUNDED TO A 1/4" RADIUS WITH A FINISHING STONE OR TOOL UNLESS OTHERWISE REQUIRED ON PLANS.

DOWELS:

DOWELS WHEN INDICATED ON PLANS AS FOR CULVERT EXTENSIONS, SHALL BE EMBEDDED AT LEAST 12" INTO THE OLD CONCRETE AND GROUTED INTO PLACE WITH 1:2 CEMENT MORTAR.

ALLOWANCE FOR DEAD LOAD DEFLECTION, SETTLEMENT, ETC. IN CASTING SUPERSTRUCTURES:

BRIDGES SHALL BE BUILT ON THE GRADE OR VERTICAL CURVE SHOWN ON PLANS. SLABS, CURBS AND PARAPETS SHALL CONFORM TO THE GRADE OR CURVE.

ALL DIMENSIONS WHICH ARE GIVEN IN SECTION AND ARE AFFECTED BY DEAD LOAD DEFLECTIONS ARE DIMENSIONS AT CENTER LINE OF BEARING UNLESS OTHERWISE NOTED ON PLANS. IN SETTING FORMS FOR STEEL BEAM BRIDGES AND PRESTRESSED CONCRETE GIRDER BRIDGES, ADJUSTMENTS SHALL BE MADE DUE TO THE DEAD LOAD DEFLECTIONS FOR THE ELEVATIONS SHOWN. WHERE BLOCKS ARE SHOWN OVER BEAMS FOR BUILDING UP TO THE SLAB, THE VERTICAL DIMENSIONS OF THE BLOCKS SHALL BE ADJUSTED BETWEEN BEARINGS TO COMPENSATE FOR DEAD LOAD DEFLECTIONS, VERTICAL CURVE ORDINATE, AND ACTUAL BEAM CAMBER. WHERE BOTTOM OF SLAB IS IN LINE WITH BOTTOM OF TOP FLANGES, DEPTH OF SLAB BETWEEN BEARINGS SHALL BE ADJUSTED TO COMPENSATE FOR DEAD LOAD DEFLECTION, VERTICAL CURVE ORDINATE, AND ACTUAL BEAM CAMBER.

IN SETTING FALSEWORK AND FORMS FOR REINFORCED CONCRETE SPANS, AN ALLOWANCE SHALL BE MADE FOR DEAD LOAD DEFLECTIONS, SETTLEMENT OF FALSEWORK, AND PERMANENT CAMBER WHICH SHALL BE PROVIDED FOR IN ADDITION TO THE ELEVATIONS SHOWN. AFTER REMOVAL OF THE FALSEWORK, THE FINISHED STRUCTURES SHALL CONFORM TO THE PROFILE AND ELEVATIONS SHOWN ON THE PLANS AND CONSTRUCTION ELEVATIONS FURNISHED BY THE ENGINEER.

DETAILED DRAWINGS FOR FALSEWORK OR FORMS FOR BRIDGE SUPERSTRUCTURE AND ANY STRUCTURE OR PARTS OF A STRUCTURE AS NOTED ON THE PLANS SHALL BE SUBMITTED TO THE ENGINEER FOR APPROVAL BEFORE CONSTRUCTION OF THE FALSEWORK OR FORMS IS STARTED.

REINFORCING STEEL:

ALL REINFORCING STEEL SHALL BE DEFORMED. DIMENSIONS RELATIVE TO PLACEMENT OF REINFORCING ARE TO CENTERS OF BARS UNLESS OTHERWISE INDICATED IN THE PLANS. DIMENSIONS ON BAR DETAILS ARE TO CENTERS OF BARS OR ARE OUT TO OUT AS INDICATED ON PLANS.

WIRE BAR SUPPORTS SHALL BE PROVIDED FOR REINFORCING STEEL WHERE INDICATED ON THE PLANS. WHEN BAR SUPPORT PIECES ARE PLACED IN CONTINUOUS LINES, THEY SHALL BE SO PLACED THAT THE ENDS OF THE SUPPORTING WIRES SHALL BE LAPPED TO LOCK LEGS ON ADJOINING PIECES.

STRUCTURAL STEEL:

AT THE CONTRACTOR'S OPTION, HE MAY SUBSTITUTE 7/8" Ø SHEAR STUDS FOR THE 3/4" Ø STUDS SPECIFIED ON THE PLANS. THIS SUBSTITUTION SHALL BE MADE AT THE RATE OF 3 - 7/8" Ø STUDS FOR 4 - 3/4" Ø STUDS, AND STUD SPACING CHANGES SHALL BE MADE AS NECESSARY TO PROVIDE THE SAME EQUIVALENT NUMBER OF 7/8" Ø STUDS ALONG THE BEAM AS SHOWN FOR 3/4" Ø STUDS BASED ON THE RATIO OF 3 - 7/8" Ø STUDS FOR 4 - 3/4" Ø STUDS. STUDS OF THE LENGTH SPECIFIED ON THE PLANS MUST BE PROVIDED. THE MAXIMUM SPACING SHALL BE 2'-0".

EXCEPT AT THE INTERIOR SUPPORTS OF CONTINUOUS BEAMS WHERE THE COVER PLATE IS IN CONTACT WITH BEARING PLATE, THE CONTRACTOR MAY, AT HIS OPTION, SUBSTITUTE FOR THE COVER PLATES DESIGNATED ON THE PLANS COVER PLATES OF THE EQUIVALENT AREA PROVIDED THESE PLATES ARE AT LEAST 5/16" IN THICKNESS AND DO NOT EXCEED A WIDTH EQUAL TO THE FLANGE WIDTH LESS 2" OR A THICKNESS EQUAL TO 2 TIMES THE FLANGE THICKNESS. THE SIZE OF FILLET WELDS SHALL CONFORM TO THE REQUIREMENTS OF THE CURRENT ANSI/AASHTO/AWS "BRIDGE WELDING CODE". ELECTROSLAG WELDING WILL NOT BE PERMITTED.

WITH THE SOLE EXCEPTION OF EDGES AT SURFACES WHICH BEAR ON OTHER SURFACES, ALL SHARP EDGES AND ENDS OF SHAPES AND PLATES SHALL BE SLIGHTLY ROUNDED BY SUITABLE MEANS TO A RADIUS OF APPROXIMATELY 1/16 INCH OR EQUIVALENT FLAT SURFACE AT A SUITABLE ANGLE PRIOR TO PAINTING, GALVANIZING, OR METALLIZING.

HANDRAILS AND POSTS:

METAL STANDARDS AND FACES OF THE CONCRETE END POSTS FOR THE METAL RAIL SHALL BE SET NORMAL TO THE GRADE OF THE CURB, UNLESS OTHERWISE SHOWN ON PLANS. THE METAL RAIL AND TOPS OF CONCRETE POSTS USED WITH THE ALUMINUM RAIL SHALL BE BUILT PARALLEL TO THE GRADE OF THE CURB.

METAL HANDRAILS SHALL BE IN ACCORDANCE WITH THE PLANS. RAILS SHALL BE AS MANUFACTURED FOR BRIDGE RAILING. CASTINGS SHALL BE OF A UNIFORM APPEARANCE. FINS AND OTHER DEFORMATIONS RESULTING FROM CASTING OR OTHERWISE SHALL BE REMOVED IN A MANNER SO THAT A UNIFORM COLORING OF THE COMPLETED CASTING SHALL BE OBTAINED. CASTINGS WITH DISCOLORATIONS OR OF NON-UNIFORM COLORING WILL NOT BE ACCEPTED. CERTIFIED MILL REPORTS ARE REQUIRED FOR METAL RAILS AND POSTS.

SPECIAL NOTES:

GENERALLY, IN CASE OF DISCREPANCY, THIS STANDARD SHEET OF NOTES SHALL GOVERN OVER THE SPECIFICATIONS, BUT THE REMAINDER OF THE PLANS SHALL GOVERN OVER NOTES HEREON, AND SPECIAL PROVISIONS SHALL GOVERN OVER ALL. SEE SPECIFICATIONS ARTICLE 105-4.

ENGLISH

JANUARY, 1990