09/08/59

WBS ELEMENT: 17BP.14.R.59

CONTRACT: DN00184

See Sheet 1-A For Index of Sheets

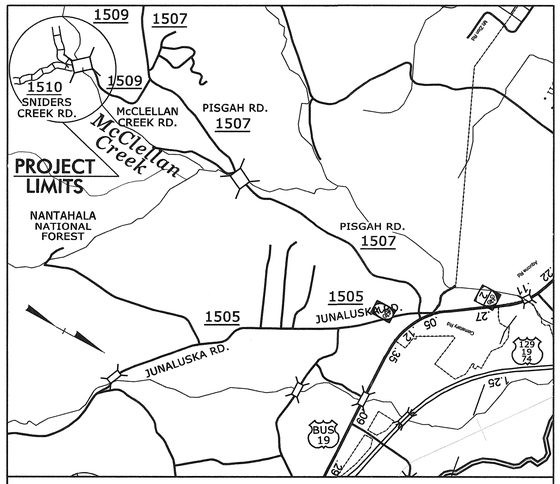

VICINITY MAP

STATE OF NORTH CAROLINA
DIVISION OF HIGHWAYS

CHEROKEE COUNTY

STATE	STATE PROJECT REFERENCE NO.	SHEET NO.	TOTAL SHEETS
N.C.	17BP.14.R.59	1	

STATE PROJ. NO.	F. A. PROJ. NO.	DESCRIPTION
17BP.14.R.59	N/A	PE
17BP.14.R.59	N/A	ROW, UTL
17BP.14.R.59	N/A	CONST.

LOCATION: REPLACE BRIDGE No. 184 ON SR 1509 OVER MCCLELLAN CREEK

TYPE OF WORK: GRADING, DRAINAGE, PAVING AND STRUCTURE

NAD 83/
NSRS 2007

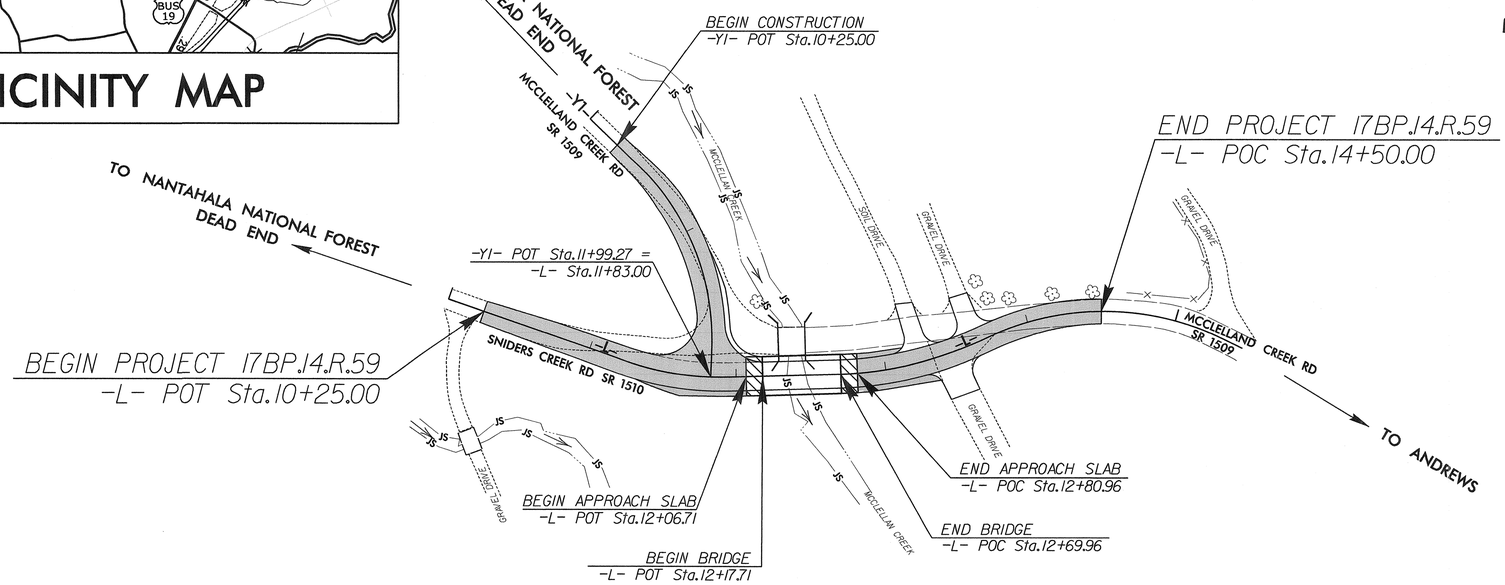

GRAPHIC SCALES

50 0 50 100
PLANS

50 0 50 100
PROFILE (HORIZONTAL)

10 0 10 20
PROFILE (VERTICAL)

DESIGN DATA

ADT 2013 = 115
ADT 2035 = 125

T = NA
V = 30 MPH

FUNC CLASS =
RURAL LOCAL
SUBREGIONAL TIER

PROJECT LENGTH

LENGTH ROADWAY TIP PROJECT 17BP.14.R.59 = 0.070 MILES

LENGTH STRUCTURE TIP PROJECT 17BP.14.R.59 = 0.010 MILES

TOTAL LENGTH TIP PROJECT 17BP.14.R.59 = 0.080 MILES

Prepared In the Office of:
RS&H
ARCHITECTS–ENGINEERS–PLANNERS, INC.
1520 SOUTH BLVD, SUITE 200
CHARLOTTE, NC 28203

2012 STANDARD SPECIFICATIONS

RIGHT OF WAY DATE:
AUGUST 1, 2012

LETTING DATE:

KENNETH HERRING, PE
PROJECT ENGINEER

JASON TALLEY, PE
PROJECT DESIGN ENGINEER

HYDRAULICS ENGINEER

NORTH CAROLINA PROFESSIONAL SEAL 18442 ENGINEER RICHARD ALLISON BOLLINGER, JR.

SIGNATURE: 3-20-2014 P.E.

ROADWAY DESIGN ENGINEER

NORTH CAROLINA PROFESSIONAL SEAL 029473 ENGINEER JASON W. TALLEY

SIGNATURE: 3-20-2014 P.E.

STATE OF NORTH CAROLINA • DEPARTMENT OF TRANSPORTATION •

3/20/2014
X:\3-Bridge 190184\Project Production\Roadway\Proj\BI90184_Rdy_tsh.dgn
8:19:38 AM

8.17.99

PROJECT REFERENCE NO.	SHEET NO.
17BP.14R.59	1-A

ROADWAY DESIGN ENGINEER

3-20-2014

INDEX OF SHEETS

SHEET NUMBER	SHEET
1	TITLE SHEET
1-A	INDEX OF SHEETS, GENERAL NOTES, AND LIST OF STANDARD DRAWINGS
1-B	CONVENTIONAL SYMBOLS
1-C	SURVEY CONTROL SHEET
2	PAVEMENT SCHEDULE, TYPICAL SECTIONS, AND WEDGING DETAILS
2-A	TYPICAL SECTIONS
2-B	TYPE III - SHOP CURVED STRUCTURE ANCHOR UNIT DETAIL
2-C	STRUCTURE ANCHOR UNITS
2-D	SPECIAL MODIFIED CONCRETE FLUME
3	SUMMARY OF QUANTITIES
3-A	SUMMARY OF DRAINAGE QUANTITIES SUMMARY OF GUARDRAIL, EARTHWORK SUMMARY, ASPHALT PAVEMENT REMOVAL SUMMARY, AND SHOULDER BERM CURB SUMMARY
4	PLAN AND PROFILE SHEET
TMP-1 THRU TMP-6	TRAFFIC MANAGEMENT PLANS
PMP-1 THRU PMP-2	PAVEMENT MARKING PLANS
EC-1 THRU EC-5	EROSION CONTROL PLANS
UO-1	UTILITIES BY OTHERS
X-0	CROSS-SECTION SUMMARY
X-1 THRU X-4	CROSS-SECTIONS
S-1 THRU S-13	STRUCTURE PLANS

GENERAL NOTES:

2012 SPECIFICATIONS
EFFECTIVE: 01-17-12
REVISED: 07/30/12

GRADING AND SURFACING OR RESURFACING AND WIDENING:

THE GRADE LINES SHOWN DENOTE THE FINISHED ELEVATION OF THE PROPOSED SURFACING AT GRADE POINTS SHOWN ON THE TYPICAL SECTIONS. WHERE NO GRADE LINES ARE SHOWN, THE PROFILES SHOWN DENOTE THE TOP ELEVATION OF THE EXISTING PAVEMENT ALONG THE CENTER LINE OF SURVEY ON WHICH THE PROPOSED RESURFACING WILL BE PLACED. GRADE LINES MAY BE ADJUSTED BY THE ENGINEER IN ORDER TO SECURE A PROPER TIE-IN.

CLEARING:

CLEARING ON THIS PROJECT SHALL BE PERFORMED TO THE LIMITS ESTABLISHED BY METHOD II.

SUPERELEVATION:

ALL CURVES ON THIS PROJECT SHALL BE SUPERELEVATED IN ACCORDANCE WITH STD. NO. 225.04 USING THE RATE OF SUPERELEVATION AND RUNOFF SHOWN ON THE PLANS. SUPERELEVATION IS TO BE REVOLVED ABOUT THE GRADE POINTS SHOWN ON THE TYPICAL SECTIONS.

SHOULDER CONSTRUCTION:

ASPHALT, EARTH, AND CONCRETE SHOULDER CONSTRUCTION ON THE HIGH SIDE OF SUPERELEVATED CURVES SHALL BE IN ACCORDANCE WITH STD. NO. 560.01.

SIDE ROADS:

THE CONTRACTOR WILL BE REQUIRED TO DO ALL NECESSARY WORK TO PROVIDE SUITABLE CONNECTIONS WITH ALL ROADS, STREETS, AND DRIVES ENTERING THIS PROJECT. THIS WORK WILL BE PAID FOR AT THE CONTRACT UNIT PRICE FOR THE PARTICULAR ITEMS INVOLVED.

GUARDRAIL:

THE GUARDRAIL LOCATIONS SHOWN ON THE PLANS MAY BE ADJUSTED DURING CONSTRUCTION AS DIRECTED BY THE ENGINEER. THE CONTRACTOR SHOULD CONSULT WITH THE ENGINEER PRIOR TO ORDERING GUARDRAIL MATERIAL.

TEMPORARY SHORING:

SHORING REQUIRED FOR THE MAINTENANCE OF TRAFFIC WILL BE PAID FOR AS "EXTRA WORK" IN ACCORDANCE WITH SECTION 104-7.

END BENTS:

THE ENGINEER SHALL CHECK THE STRUCTURE END BENT PLANS, DETAILS, AND CROSS-SECTION PRIOR TO SETTING OF THE SLOPE STAKES FOR THE EMBANKMENT OR EXCAVATION APPROACHING A BRIDGE.

UTILITIES:

UTILITY OWNERS ON THIS PROJECT ARE Duke Energy Corporation

Fontier Communications, Inc.

ANY RELOCATION OF EXISTING UTILITIES WILL BE ACCOMPLISHED BY OTHERS, EXCEPT AS SHOWN ON THE PLANS.

RIGHT-OF-WAY MARKERS:

ALL RIGHT-OF-WAY MARKERS ON THIS PROJECT SHALL BE PLACED BY CONTRACT. IN ACCORDANCE WITH SECTION 801 OF THE 2012 NORTH CAROLINA STANDARD SPECIFICATIONS FOR ROADS AND STRUCTURES.

2012 ROADWAY ENGLISH STANDARD DRAWINGS

The following Roadway Standards as appear in "Roadway Standard Drawings" Highway Design Branch - N. C. Department of Transportation - Raleigh, N. C., Dated January, 2012 are applicable to this project and by reference hereby are considered a part of these plans:

STD.NO.	TITLE
DIVISION 2 - EARTHWORK	
200.02	Method of Clearing - Method II
225.02	Guide for Grading Subgrade - Secondary and Local
DIVISION 3 - PIPE CULVERTS	
300.01	Method of Pipe Installation
310.10	Driveway Pipe Construction
DIVISION 4 - MAJOR STRUCTURES	
422.11	Reinforced Bridge Approach Fills - Sub Regional Tier
DIVISION 5 - SUBGRADE, BASES AND SHOULDERS	
560.01	Method of Shoulder Construction - High Side of Superelevated Curve - Method I
DIVISION 8 - INCIDENTALS	
850.01	Concrete Paved Ditches
862.01	Guardrail Placement
862.02	Guardrail Installation
862.03	Structure Anchor Units
876.02	Guide for Rip Rap at Pipe Outlets

3/20/2014
X:\Bridge 190184\Project Production\Roadway\Proj\B190184_Rdy_tsh.dgn
31326 PM

12/05/11

Note: Not to Scale

****S.U.E. = Subsurface Utility Engineering***

STATE OF NORTH CAROLINA
DIVISION OF HIGHWAYS

CONVENTIONAL PLAN SHEET SYMBOLS

PROJECT REFERENCE NO.	SHEET NO.
I7BPJ4.R.59	1-B

BOUNDARIES AND PROPERTY:

- State Line
- County Line
- Township Line
- City Line
- Reservation Line
- Property Line
- Existing Iron Pin — EIP
- Property Corner
- Property Monument — ECM
- Parcel/Sequence Number — 123
- Existing Fence Line
- Proposed Woven Wire Fence
- Proposed Chain Link Fence
- Proposed Barbed Wire Fence
- Existing Wetland Boundary — WLB
- Proposed Wetland Boundary — WLB
- Existing Endangered Animal Boundary — EAB
- Existing Endangered Plant Boundary — EPB
- Known Soil Contamination: Area or Site
- Potential Soil Contamination: Area or Site

BUILDINGS AND OTHER CULTURE:

- Gas Pump Vent or U/G Tank Cap
- Sign — S
- Well — W
- Small Mine
- Foundation
- Area Outline
- Cemetery
- Building
- School
- Church
- Dam

HYDROLOGY:

- Stream or Body of Water
- Hydro, Pool or Reservoir
- Jurisdictional Stream — JS
- Buffer Zone 1 — BZ 1
- Buffer Zone 2 — BZ 2
- Flow Arrow
- Disappearing Stream
- Spring
- Wetland
- Proposed Lateral, Tail, Head Ditch — FLOW
- False Sump

RAILROADS:

- Standard Gauge — CSX TRANSPORTATION
- RR Signal Milepost — MILEPOST 35
- Switch — SWITCH
- RR Abandoned
- RR Dismantled

RIGHT OF WAY:

- Baseline Control Point
- Existing Right of Way Marker
- Existing Right of Way Line
- Proposed Right of Way Line — RW
- Proposed Right of Way Line with Iron Pin and Cap Marker — RW
- Proposed Right of Way Line with Concrete or Granite R/W Marker — RW
- Proposed Control of Access Line with Concrete C/A Marker — CA
- Existing Control of Access — CA
- Proposed Control of Access — CA
- Existing Easement Line — E
- Proposed Temporary Construction Easement — E
- Proposed Temporary Drainage Easement — TDE
- Proposed Permanent Drainage Easement — PDE
- Proposed Permanent Drainage / Utility Easement — DUE
- Proposed Permanent Utility Easement — PUE
- Proposed Temporary Utility Easement — TUE
- Proposed Aerial Utility Easement — AUE
- Proposed Permanent Easement with Iron Pin and Cap Marker

ROADS AND RELATED FEATURES:

- Existing Edge of Pavement
- Existing Curb
- Proposed Slope Stakes Cut — C
- Proposed Slope Stakes Fill — F
- Proposed Curb Ramp — CR
- Existing Metal Guardrail
- Proposed Guardrail
- Existing Cable Guiderail
- Proposed Cable Guiderail
- Equality Symbol
- Pavement Removal

VEGETATION:

- Single Tree
- Single Shrub
- Hedge
- Woods Line
- Orchard
- Vineyard — Vineyard

EXISTING STRUCTURES:

MAJOR:

- Bridge, Tunnel or Box Culvert — CONC
- Bridge Wing Wall, Head Wall and End Wall — CONC WW

MINOR:

- Head and End Wall — CONC HW
- Pipe Culvert
- Footbridge
- Drainage Box: Catch Basin, DI or JB — CB
- Paved Ditch Gutter
- Storm Sewer Manhole — S
- Storm Sewer — S

UTILITIES:

POWER:

- Existing Power Pole
- Proposed Power Pole
- Existing Joint Use Pole
- Proposed Joint Use Pole
- Power Manhole — P
- Power Line Tower
- Power Transformer
- U/G Power Cable Hand Hole
- H-Frame Pole
- Recorded U/G Power Line — P
- Designated U/G Power Line (S.U.E.*) — P

TELEPHONE:

- Existing Telephone Pole
- Proposed Telephone Pole
- Telephone Manhole — T
- Telephone Booth
- Telephone Pedestal — T
- Telephone Cell Tower
- U/G Telephone Cable Hand Hole — HH
- Recorded U/G Telephone Cable — T
- Designated U/G Telephone Cable (S.U.E.*) — T
- Recorded U/G Telephone Conduit — TC
- Designated U/G Telephone Conduit (S.U.E.*) — TC
- Recorded U/G Fiber Optics Cable — T FO
- Designated U/G Fiber Optics Cable (S.U.E.*) — T FO

WATER:

- Water Manhole — W
- Water Meter
- Water Valve
- Water Hydrant
- Recorded U/G Water Line — W
- Designated U/G Water Line (S.U.E.*) — W
- Above Ground Water Line — A/G Water

TV:

- TV Satellite Dish
- TV Pedestal — C
- TV Tower
- U/G TV Cable Hand Hole — HH
- Recorded U/G TV Cable — TV
- Designated U/G TV Cable (S.U.E.*) — TV
- Recorded U/G Fiber Optic Cable — TV FO
- Designated U/G Fiber Optic Cable (S.U.E.*) — TV FO

GAS:

- Gas Valve
- Gas Meter
- Recorded U/G Gas Line — G
- Designated U/G Gas Line (S.U.E.*) — G
- Above Ground Gas Line — A/G Gas

SANITARY SEWER:

- Sanitary Sewer Manhole
- Sanitary Sewer Cleanout
- U/G Sanitary Sewer Line — SS
- Above Ground Sanitary Sewer — A/G Sanitary Sewer
- Recorded SS Forced Main Line — FSS
- Designated SS Forced Main Line (S.U.E.*) — FSS

MISCELLANEOUS:

- Utility Pole
- Utility Pole with Base
- Utility Located Object
- Utility Traffic Signal Box — S
- Utility Unknown U/G Line — ?UTL
- U/G Tank; Water, Gas, Oil
- Underground Storage Tank, Approx. Loc. — UST
- A/G Tank; Water, Gas, Oil
- Geoenvironmental Boring
- U/G Test Hole (S.U.E.*)
- Abandoned According to Utility Records — AATUR
- End of Information — E.O.I.

5/28/99

PROJECT REFERENCE NO.	SHEET NO.
17BP.14.R.59	1-C
LOCATION AND SURVEYS	

RS&H
IMPROVING YOUR WORLD
RS&H Architects-Engineers-Planners, Inc.

SURVEY CONTROL SHEET 17BP.14.R.59
–FINAL–

BL

POINT	DESC.	NORTH	EAST	ELEVATION	L STATION	OFFSET
1	BL-1	553154.3899	562926.9651	1986.21	10+42.42	130.36 LT
2	BL-2	553356.4460	562959.9640	1975.51	12+54.39	34.02 LT
3	BL-3	553611.5918	562824.7409	1975.71	15+45.31	16.07 LT

```
****************************************
BM1       ELEVATION = 1976.60
N 553316        E 562967
L STATION 12+15.30 47.90 LEFT
RR SPIKE IN 24" POPLAR TREE
****************************************
```

L

TYPE	STATION	NORTH	EAST
POT	10+00.00	553132.84	563062.35
PC	11+21.45	553252.80	563043.39
PI	11+58.05	553288.95	563037.67
PT	11+93.85	553320.74	563019.53
PC	12+67.75	553384.92	562982.89
PI	13+20.90	553430.78	562956.70
PT	13+71.85	553462.14	562914.20
PC	13+71.85	553462.14	562914.20
PI	14+59.12	553513.95	562843.97
PT	15+34.37	553601.8	562841.16
POT	15+48.29	553615.09	562840.71

ROW MARKER AND PERMANENT EASEMENT

ALIGN	STATION	OFFSET	NORTH	EAST
-L-	10+25.00	8.00	553158.7867	563066.3498
-L-	10+25.00	30.00	553162.2216	563088.0800
-L-	11+21.45	35.00	553258.2694	563077.9598
-L-	11+93.85	35.00	553338.0916	563049.9244
-L-	11+93.85	50.00	553345.5286	563062.9509
-L-	12+67.75	35.00	553402.2690	563013.2847
-L-	12+75.00	50.00	553417.2013	563021.8868
-L-	13+71.85	35.00	553490.3057	562934.9791
-L-	13+71.85	20.84	553478.9077	562926.5701
-L-	10+25.00	-8.00	553156.2886	563050.5461
-L-	10+25.00	-30.00	553152.8537	563028.8159
-L-	11+21.45	-30.00	553248.1209	563013.7570
-L-	11+35.00	-40.00	553257.2011	563001.8259
-Y1-	11+20.00	25.86	553249.3826	562978.6905

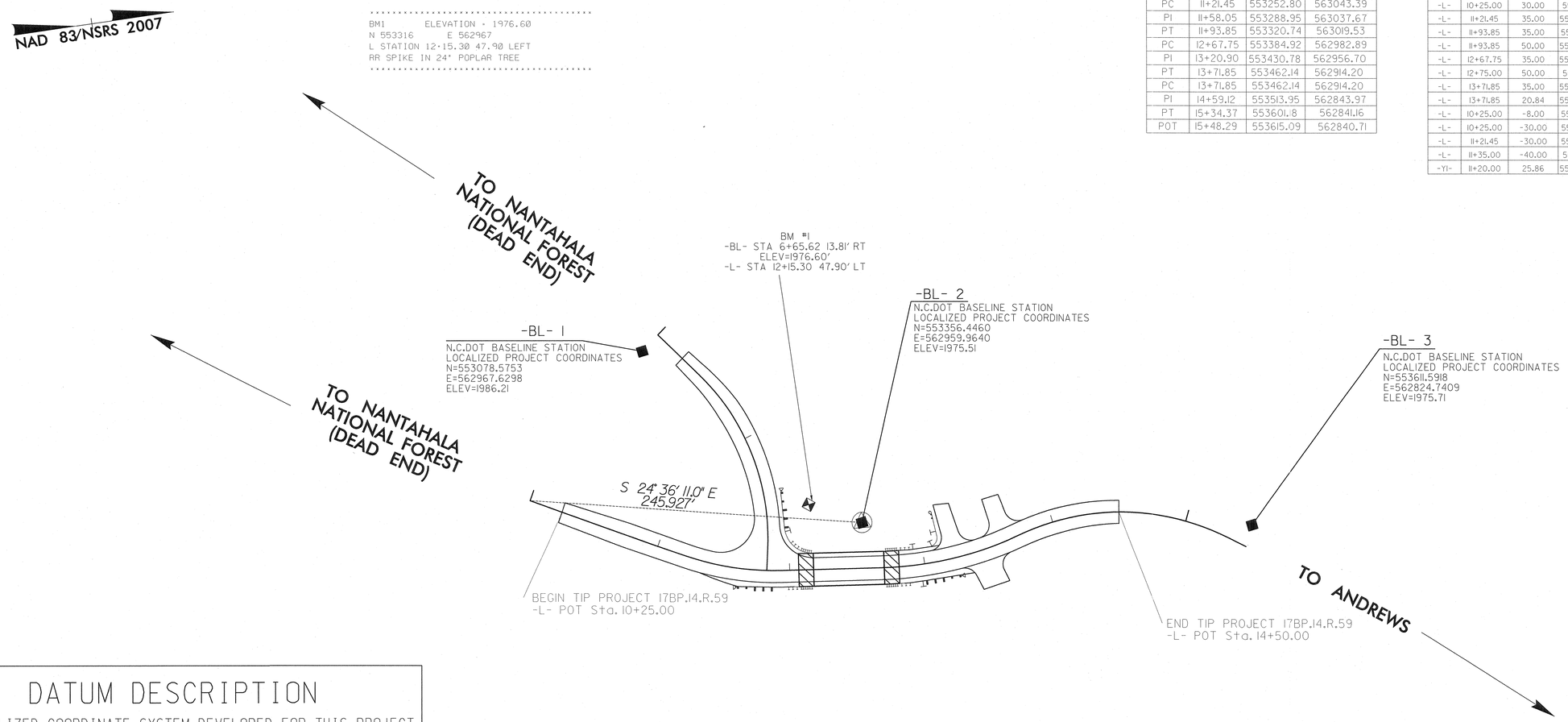

DATUM DESCRIPTION

THE LOCALIZED COORDINATE SYSTEM DEVELOPED FOR THIS PROJECT IS BASED ON THE STATE PLANE COORDINATES ESTABLISHED BY NCDOT FOR MONUMENT "190184-BL2" WITH NAD 83/2007 STATE PLANE GRID COORDINATES OF NORTHING: 553356.446(ft) EASTING: 562959.964(ft) THE AVERAGE COMBINED GRID FACTOR USED ON THIS PROJECT (GROUND TO GRID) IS: 0.999783427 THE N.C. LAMBERT GRID BEARING AND LOCALIZED HORIZONTAL GROUND DISTANCE FROM "190184-BL2" TO -L- STATION 10+00.00 IS S 24°36'10.96" E 245.927' ALL LINEAR DIMENSIONS ARE LOCALIZED HORIZONTAL DISTANCES VERTICAL DATUM USED IS ON NCDOT MONUMENT 190184 -BL- 2 (ELEV = 1975.51') (NAVD 1988) GEOIDAL MODEL: G09NC

NOTE: DRAWING NOT TO SCALE

NOTES:

1. *THE CONTROL DATA FOR THIS PROJECT CAN BE FOUND ELECTRONICALLY BY SELECTING PROJECT CONTROL DATA AT: HTTPS://CONNECT.NCDOT.GOV/RESOURCES/LOCATION/*

   THE FILES TO BE FOUND ARE AS FOLLOWS: 190184_LS_CONTROL.TXT

   SITE CALIBRATION INFORMATION HAS NOT BEEN PROVIDED FOR THIS PROJECT. IF FURTHER INFORMATION IS NEEDED, PLEASE CONTACT THE LOCATION AND SURVEYS UNIT.

△ *INDICATES GEODETIC CONTROL MONUMENTS USED OR SET FOR HORIZONTAL PROJECT CONTROL BY THE NCDOT LOCATION AND SURVEYS UNIT.*

PROJECT CONTROL ESTABLISHED USING GLOBAL POSITIONING SYSTEM.

2/15/2014
X:\P_Bridge 190184\Project Production\Roadway\Proj\190184_Rdy_survey.dgn
kisha pair

6/2/99

PAVEMENT SCHEDULE

C1	PROP. APPROX. 3" ASPHALT CONCRETE SURFACE COURSE, TYPE S9.5B, AT AN AVERAGE RATE OF 168 LBS. PER SQ. YD. IN EACH OF TWO LAYERS.
C2	PROP. VAR. DEPTH ASPHALT CONCRETE SURFACE COURSE, TYPE S9.5B, AT AN AVERAGE RATE OF 112 LBS. PER SQ. YD. PER 1" DEPTH. TO BE PLACED IN LAYERS NOT TO EXCEED 2" IN DEPTH.
E1	PROP. APPROX. 5½" ASPHALT CONCRETE BASE COURSE, TYPE B25.0B, AT AN AVERAGE RATE OF 627 LBS. PER SQ. YD.
E2	PROP. VAR. DEPTH ASPHALT CONCRETE BASE COURSE, TYPE B25.0B, AT AN AVERAGE RATE OF 114 LBS. PER SQ. YD. PER 1" DEPTH. TO BE PLACED IN LAYERS NOT LESS THAN 3" IN DEPTH OR GREATER THAN 5½" IN DEPTH.
J1	PROP. 8" AGGREGATE BASE COURSE
R1	SPECIAL SHOULDER BERM CURB
T	EARTH MATERIAL.
U	EXISTING PAVEMENT.
W	VARIABLE DEPTH ASPHALT PAVEMENT (SEE STANDARD WEDGING DETAIL).

NOTE: PAVEMENT EDGE SLOPES ARE 1:1 UNLESS SHOWN OTHERWISE.

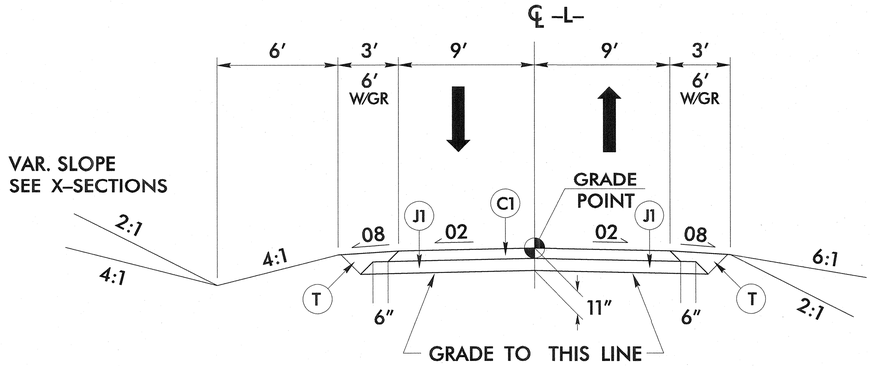

TYPICAL SECTION NO. 1

USE TYPICAL SECTION NO. 1

–L– STA. 10+25.00 TO –L– STA. 12+17.71 (BEGIN BRIDGE)
–L– STA. 12+69.96 (END BRIDGE) TO –L– STA. 13+75.00

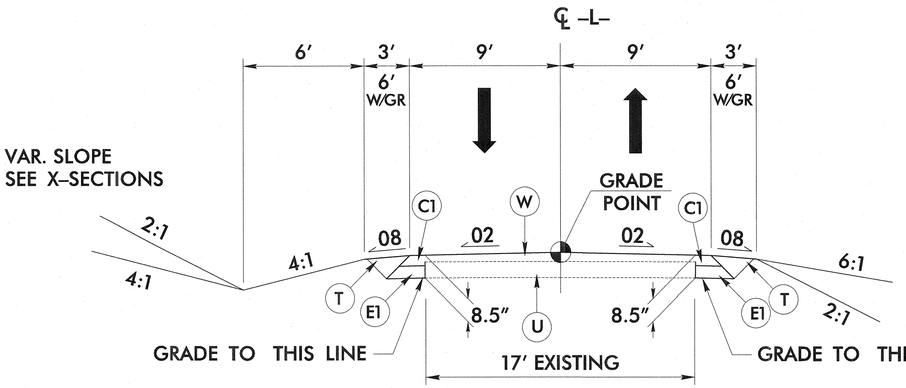

TYPICAL SECTION NO. 2

USE TYPICAL SECTION NO. 2

–L– STA. 13+75.00 TO –L– STA. 14+50.00

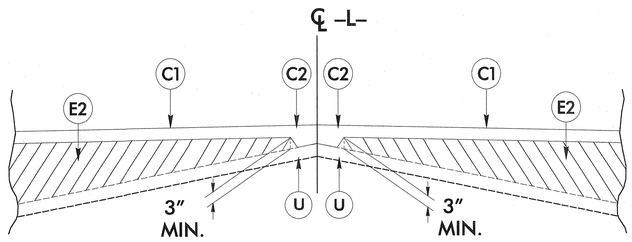

STANDARD WEDGING DETAIL

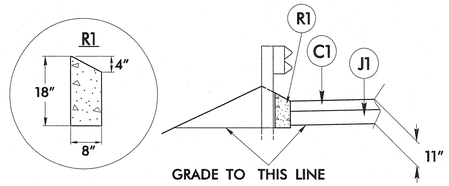

DETAIL SHOWING SPECIAL SHOULDER BERM CURB (SBC) ON TOP OF SUBGRADE

–L– STA. 12+03.00 TO –L– STA. 12+06.71 (BEGIN APPROACH SLAB) (LT & RT)
–L– STA. 12+81.49 (END APPROACH SLAB) TO –L– STA. 12+89.00 LT
–L– STA. 12+80.49 (END APPROACH SLAB) TO –L– STA. 12+84.00 RT

PROJECT REFERENCE NO.	SHEET NO.
I7BPJ4.R.59	2

ROADWAY DESIGN ENGINEER

NORTH CAROLINA PROFESSIONAL SEAL 029473 ENGINEER JASON M. TALLEY
3-20-2014

PAVEMENT DESIGN ENGINEER

RS&H
IMPROVING YOUR WORLD
RS&H Architects-Engineers-Planners, Inc.

3/20/2014
X:\Bridge 190184\Project Production\Roadway\Proj\B190184_Rdy_typ.dgn
3:20:56 PM

6/2/99

PAVEMENT SCHEDULE

C1	PROP. APPROX. 3" ASPHALT CONCRETE SURFACE COURSE, TYPE S9.5B, AT AN AVERAGE RATE OF 168 LBS. PER SQ. YD. IN EACH OF TWO LAYERS.
C2	PROP. VAR. DEPTH ASPHALT CONCRETE SURFACE COURSE, TYPE S9.5B, AT AN AVERAGE RATE OF 112 LBS. PER SQ. YD. PER 1" DEPTH. TO BE PLACED IN LAYERS NOT TO EXCEED 2" IN DEPTH.
E1	PROP. APPROX. 5½" ASPHALT CONCRETE BASE COURSE, TYPE B25.0B, AT AN AVERAGE RATE OF 627 LBS. PER SQ. YD.
E2	PROP. VAR. DEPTH ASPHALT CONCRETE BASE COURSE, TYPE B25.0B, AT AN AVERAGE RATE OF 114 LBS. PER SQ. YD. PER 1" DEPTH. TO BE PLACED IN LAYERS NOT LESS THAN 3" IN DEPTH OR GREATER THAN 5½" IN DEPTH.
J1	PROP. 8" AGGREGATE BASE COURSE
R1	SPECIAL SHOULDER BERM CURB
T	EARTH MATERIAL.
U	EXISTING PAVEMENT.
W	VARIABLE DEPTH ASPHALT PAVEMENT (SEE STANDARD WEDGING DETAIL).

NOTE: PAVEMENT EDGE SLOPES ARE 1:1 UNLESS SHOWN OTHERWISE.

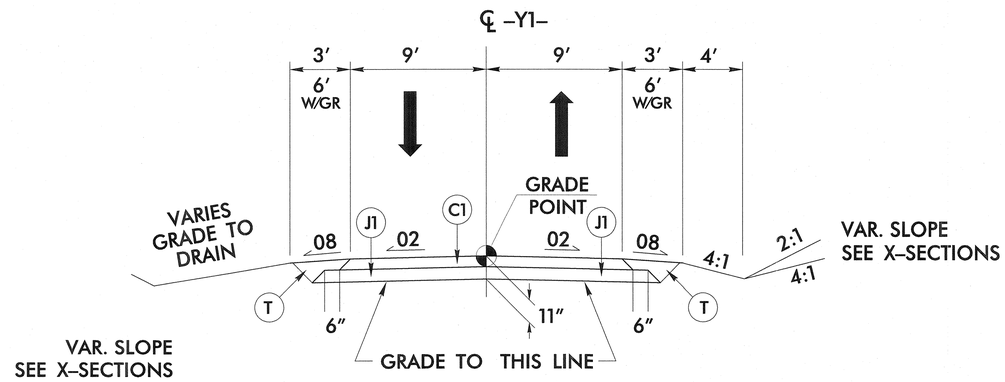

TYPICAL SECTION NO. 3

–Y1– STA. 10+25.00 TO –Y1– STA. 11+90.26

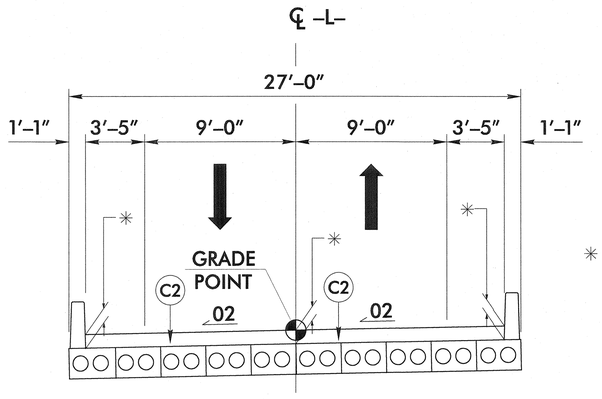

✳ — SEE STRUCTURE PLANS FOR PAVEMENT DEPTHS

TYPICAL SECTION ON STRUCTURE

USE TYPICAL SECTION ON STRUCTURE

–L– STA. 12+17.71 TO –L– STA. 12+69.96

PROJECT REFERENCE NO.	SHEET NO.
I7BPJ4.R.59	2-A

ROADWAY DESIGN ENGINEER

NORTH CAROLINA PROFESSIONAL SEAL 029473 ENGINEER JASON N. TALLEY

3-20-2014

PAVEMENT DESIGN ENGINEER

RS&H IMPROVING YOUR WORLD

RS&H Architects-Engineers-Planners, Inc.

2/19/2014
K:\B_Bridge 190184\Project Production\Roadway\Proj\B190184_Rdy_typ.dgn
15:21 PM

5/14/99

PROJECT REFERENCE NO.	SHEET NO.
17.BP.14.R.59	2-B

STATE OF
NORTH CAROLINA
DEPT. OF TRANSPORTATION
DIVISION OF HIGHWAYS
RALEIGH, N.C.

ENGLISH DETAIL DRAWING FOR

TYPE III - SHOP CURVED
STRUCTURE ANCHOR UNIT

SHEET 1 OF 1

TYPE III SC

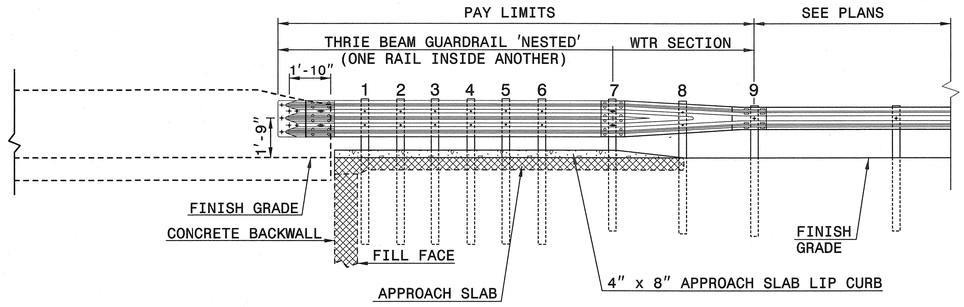

ELEVATION

SEE ROADWAY PLANS FOR END TREATMENT

NOTE:
 **POST NOT REQUIRED FOR SKEW ANGLES GREATER THAN 150° OR LESS THAN 30° UNLESS OTHERWISE DIRECTED BY THE ENGINEER.
 *THE DISTANCE FROM END OF BRIDGE RAIL TO CENTER LINE OF THE FIRST POST SHOULD BE 11½" IF CONCRETE BACKWALL IS NOT PRESENT.
 -SHOULDER BERM GUTTER MUST BE INSTALLED TO THE LIMITS 8" x 4" LIP CURB IS SHOWN IF ANCHOR UNIT IS NOT ADJACENT TO AN APPROACH SLAB.
 -MEASURE GUARDRAIL HEIGHT FROM THE TOP OF ADJACENT SURFACE (SHOULDER, BERM, OR GUTTER).
 -USE NO STEEL POSTS WITHIN THE GUARDRAIL ANCHOR UNIT LIMITS.
 -LAP JOINTS IN THE DIRECTION OF TRAFFIC FLOW.
 -SEE STANDARD 862.03 SHEET 4 FOR POST SECTIONS 1 THRU 9.

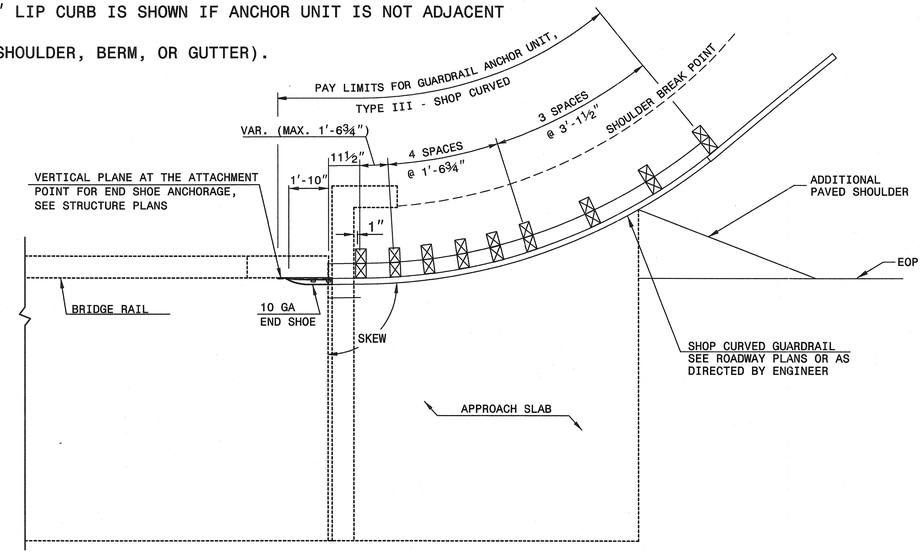

PLAN VIEW

GUARDRAIL ANCHOR UNIT, TYPE III - SHOP CURVED FOR ATTACHMENT TO RAIL ON BRIDGE

STATE OF
NORTH CAROLINA
DEPT. OF TRANSPORTATION
DIVISION OF HIGHWAYS
RALEIGH, N.C.

ENGLISH DETAIL DRAWING FOR

TYPE III - SHOP CURVED
STRUCTURE ANCHOR UNIT

SHEET 1 OF 1

TYPE III SC

CONTRACT STANDARDS
AND DEVELOPMENT UNIT
Office 919-707-6950 FAX 919-250-4119

SEE PLATE FOR TITLE

ORIGINAL BY: E.E.Ward DATE: 4-4-02
MODIFIED BY: T.S.Spell DATE: 5-29-09
CHECKED BY: DATE:
FILE SPEC.: ward:\usr\details\stand\862stds\typeiiisc.dgn

29-SEP-2011 09:30
$$$$USERNAME$$$$
S:\Contracts\Contracts\Special Details\ericward\usr\details\stand\862stds\type_iii_sc.dgn

PROJECT REFERENCE NO.	SHEET NO.
17.BP.14.R.59	2-C

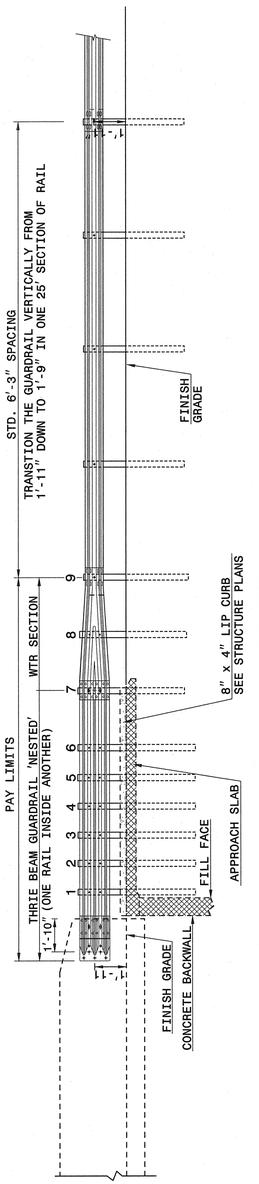

ELEVATION

NOTE:
**POST NOT REQUIRED FOR SKEW ANGLES GREATER THAN 150° OR LESS THAN 30° UNLESS OTHERWISE DIRECTED BY THE ENGINEER.
*THE DISTANCE FROM END OF BRIDGE RAIL TO CENTER LINE OF THE FIRST POST SHOULD BE 11½" IF CONCRETE BACKWALL IS NOT PRESENT.
-SHOULDER BERM GUTTER MUST BE INSTALLED TO THE LIMITS 8" x 4" LIP CURB IS SHOWN IF ANCHOR UNIT IS NOT ADJACENT TO AN APPROACH SLAB.
-MEASURE GUARDRAIL HEIGHT FROM THE TOP OF ADJACENT SURFACE (SHOULDER, BERM, OR GUTTER).
-LAP JOINTS IN THE DIRECTION OF TRAFFIC FLOW.
-SEE SHEET 5 FOR POST SECTIONS 1 THRU 9.

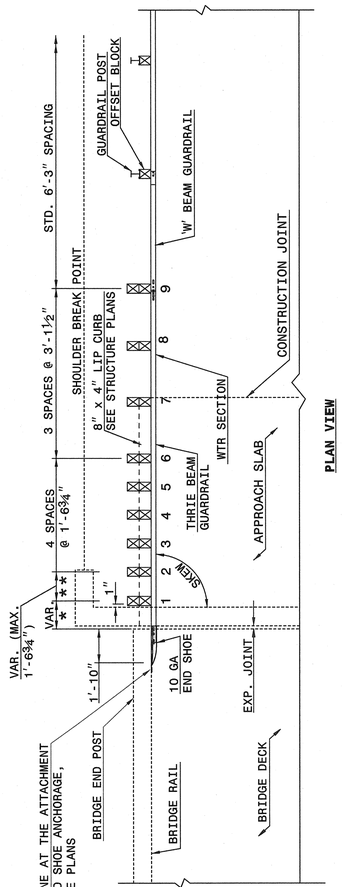

PLAN VIEW

GUARDRAIL ANCHOR UNIT, TYPE III FOR ATTACHMENT TO RAIL ON BRIDGE - SUB REGIONAL TIER

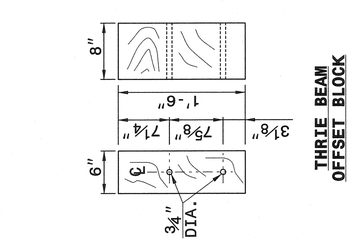

THRIE BEAM OFFSET BLOCK

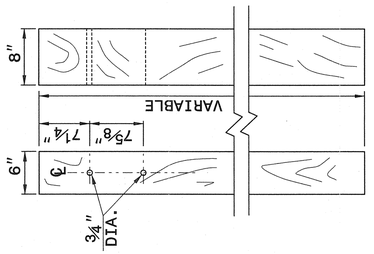

THRIE BEAM LINE POST

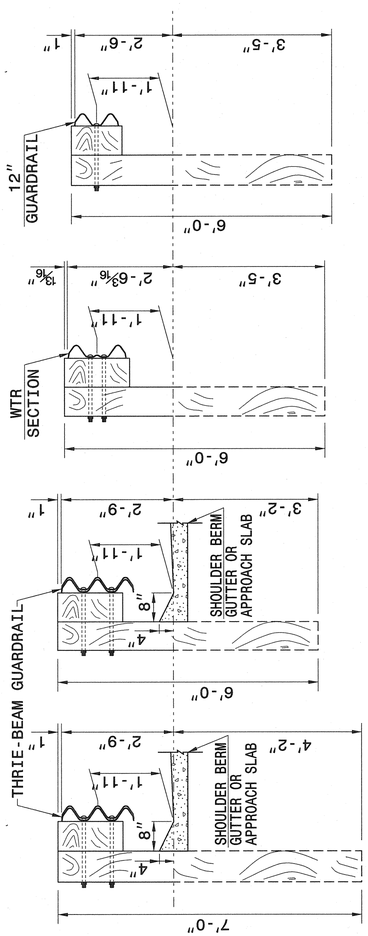

SECTION OF 'W' BEAM POST 9

SECTION OF WTR BEAM POST 8

SECTION OF THRIE BEAM POST 7

SECTION OF THRIE BEAM POSTS 1 THRU 6

NOTE: THE MID POST AND OFFSET BLOCK OF THE WTR SECTION WILL REQUIRE SPECIAL BOLT HOLE DRILLING IN THE THRIE BEAM OFFSET BLOCK AND LINE POST.

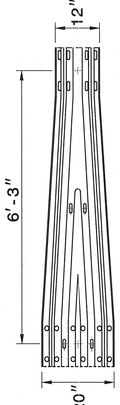

WTR SECTION
ELEVATION VIEW

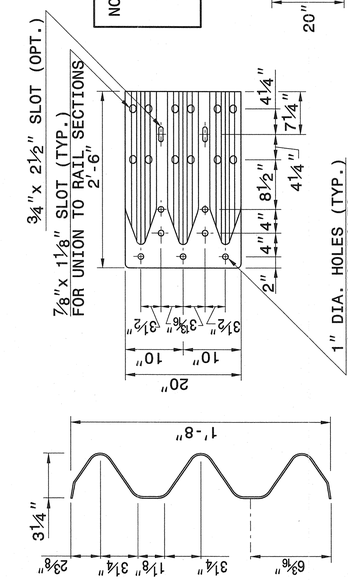

END SHOE

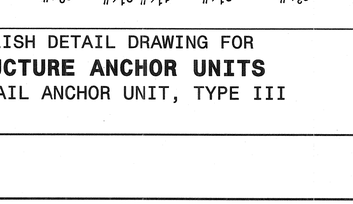

THRIE-BEAM SECTION

CONTRACT STANDARDS AND DEVELOPMENT UNIT
Office 919-707-6950 FAX 919-250-4119

SEE TITLE BLOCK

ORIGINAL BY: J HOWERTON DATE: 06-22-12
MODIFIED BY: DATE:
CHECKED BY: DATE:
FILE SPEC.:

$$$$USERNAME$$$$
$$$$TIME$$$$

PROJECT REFERENCE NO.	SHEET NO.
17BP.14.R.59	2-D

STATE OF
NORTH CAROLINA
DEPT. OF TRANSPORTATION
DIVISION OF HIGHWAYS
RALEIGH, N.C.

ENGLISH DETAIL DRAWING FOR

SPEC. MODIFIED CONCRETE FLUME

WITH CONCRETE OR RIP-RAP DITCH

SHEET 1 OF 1

MODFLMDTCH

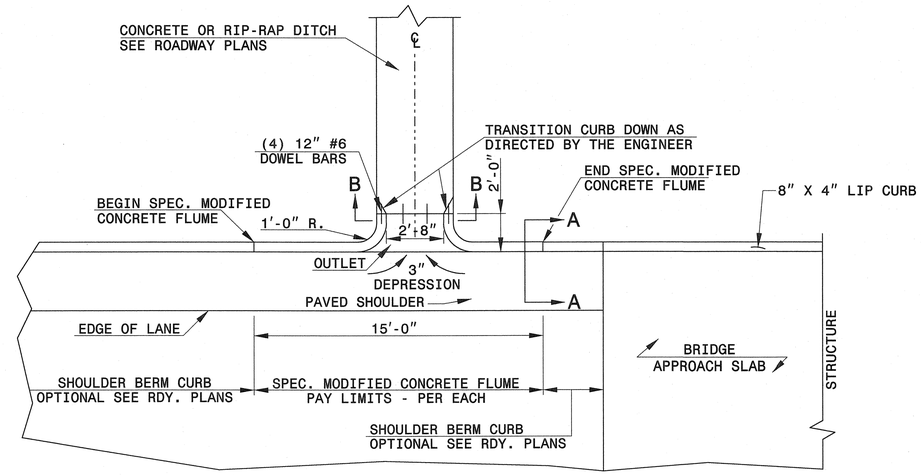

PLAN VIEW

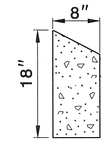

SECTION A-A

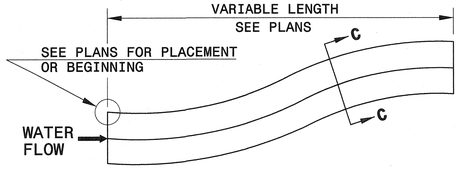

DOWNGRADE OR SAG

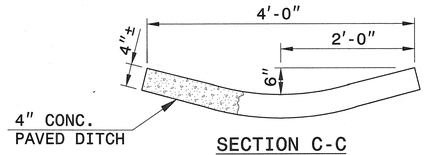

SECTION C-C

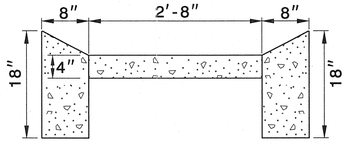

SECTION B-B

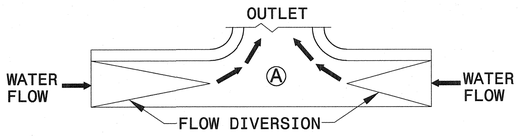

SAG

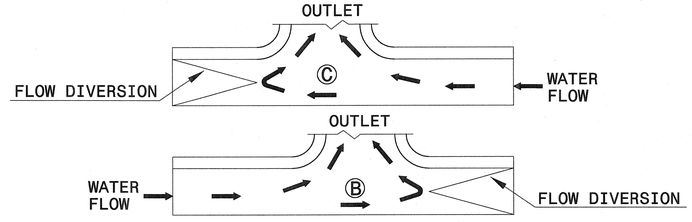

DOWN GRADE

FLOW DIVERSION EXAMPLES

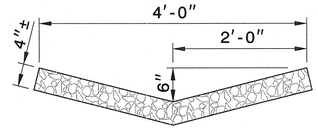

RIP-RAP LINED DITCH

NOTES:

- CONSTRUCT MODIFIED CONCRETE FLUME AND SHOULDER BERM CURB IN ACCORDANCE WITH THIS DETAIL.
- CONSTRUCT CONCRETE DITCH IN ACCORDANCE WITH STD. DWG. NO. 850.01.
- CONSTRUCT RIP RAP LINED DITCH IN ACCORDANCE WITH THIS DETAIL, IF CALLED FOR IN PLANS.
- CONCRETE OR RIP RAP LINED DITCH SHALL BE THE TYPE AND LENGTH SPECIFIED BY THE ROADWAY PLANS. THE DITCH SHALL TERMINATE AS SHOWN ON THE PLANS. IF NO TERMINATION IS INDICATED PLACE RIP-RAP AT THE END OF THE DITCH AS INDICATED BY STD. DWG. 876.02 FOR AN 18" PIPE. TRANSITIONS FROM THE DITCH TO TERMINATION SHALL BE AS DIRECTED BY THE ENGINEER.
- MODIFICATIONS SHALL BE AS DICTATED BY SITE CONDITIONS AND DIRECTED BY THE ENGINEER.

STATE OF
NORTH CAROLINA
DEPT. OF TRANSPORTATION
DIVISION OF HIGHWAYS
RALEIGH, N.C.

ENGLISH DETAIL DRAWING FOR

SPEC. MODIFIED CONCRETE FLUME

WITH CONCRETE OR RIP-RAP DITCH

SHEET 1 OF 1

MODFLMDTCH

CONTRACT STANDARDS
AND DEVELOPMENT UNIT
Office 919-707-6950 FAX 919-250-4119

SEE PLATE FOR TITLE

ORIGINAL BY: E.E. Ward DATE: Apr. 2002
MODIFIED BY: E.E. Ward DATE: July 2004
CHECKED BY: DATE:
FILE SPEC.: w:details\stand\modifiedflume.dgn

SYSTEMS GENERATED

STATE OF NORTH CAROLINA
DIVISION OF HIGHWAYS

SUMMARY OF QUANTITIES

STATE OF NORTH CAROLINA
DIVISION OF HIGHWAYS
SUMMARY OF QUANTITIES FOR CONTRACT - DN00184

Item Number	Sec #	Quantity	Unit	Description
0000100000-N	800	1	LS	MOBILIZATION
0000400000-N	801	1	LS	CONSTRUCTION SURVEYING
0030000000-N	SP	1	LS	BRG APP SUB REG TEIR -L- STA 12+43.84
0043000000-N	226	1	LS	GRADING
0050000000-E	226	1	ACR	SUPP CLEARING & GRUBBING
0057000000-E	226	50	CY	UNDERCUT EXCAVATION
0134000000-E	240	5	CY	DRAINAGE DITCH EXCAVATION
0195000000-E	265	50	CY	SELECT GRANULAR MATERIAL
0196000000-E	270	50	SY	GEOTEXTILE SOIL STABILIZATION
0318000000-E	300	15	TON	FND CONDIT MATL MINOR STRS
0320000000-E	300	40	SY	FND CONDIT GEOTEXTILE
0343000000-E	310	36	LF	15" SIDE DRAIN PIPE
0372000000-E	310	56	LF	15" RC PIPE CULV III
0995000000-E	340	40	LF	PIPE REMOVAL
1121000000-E	520	520	TON	AGGREGATE BASE COURSE
1220000000-E	545	50	TON	INCIDENTAL STONE BASE
1489000000-E	610	13	TON	ASP CONC BASE CRS B25.0B
1519000000-E	610	230	TON	ASP CONC SURF CRS S9.5B
1575000000-E	620	15	TON	ASP FOR PLANT MIX
2570000000-E	SP	1	EA	MODIFIED CONCRETE FLUME
2619000000-E	850	6	SY	4" CONCRETE PAVED DITCH
2752000000-E	SP	20	LF	GENERIC PAVING ITEM (LF) SPECIAL SHOULDER BERM CURB
3030000000-E	862	50	LF	STL BM GUARDRAIL
3045000000-E	862	50	LF	SBGR SHOP CURVED
3150000000-N	862	5	EA	ADDIT GUARDRAIL POSTS
3165000000-N	SP	1	EA	GR ANCHOR TYPE SHOP CURVE TYPE III
3180000000-N	SP	3	EA	GR ANCHOR TYPE TL-2
3195000000-N	862	1	EA	GR ANCHOR TYPE AT-1
3215000000-E	862	3	EA	GR ANCHOR TYPE III
3649000000-E	876	5	TON	RIP RAP, CLASS B
3656000000-E	876	27	SY	GEOTEXTILE FOR DRAINAGE
4400000000-E	1110	168	SF	WORK ZONE SIGNS (STAT)
4405000000-E	1110	48	SF	WORK ZONE SIGNS (PORT)
4410000000-E	1110	30	SF	WORK ZONE SIGNS (BARR)
4430000000-E	1130	74	EA	DRUMS
4445000000-E	1145	36	LF	BARRICADES (TYPE III)
4455000000-N	1150	180	DAY	FLAGGER
4770000000-E	1205	885	LF	4" COLD APPL PLSTIC LINES TYPE 4
4795000000-E	1205	11	LF	24" COLD APPL PLSTIC LINES TYPE 4
4810000000-E	1205	4640	LF	PAINT PVMT MARKINGS 4"
4835000000-E	1205	24	LF	PAINT PVMT MARKINGS 24"
4850000000-E	1205	816	LF	LINE REMOVAL 4" WIDE
6000000000-E	1605	215	LF	TEMPORARY SILT FENCE
6006000000-E	1610	15	TON	EROS CONTRL STONE CL A
6009000000-E	1610	60	TON	EROS CONTRL STONE CL B
6012000000-E	1610	35	TON	SEDIMENT CONTROL STONE
6015000000-E	1615	1.0	ACR	TEMPORARY MULCHING
6018000000-E	1620	50	LB	SEED FOR TEMP SEEDING
6021000000-E	1620	0.25	TON	FERT FOR TEMP SEEDING
6024000000-E	1622	100	LF	TEMPORARY SLOPE DRAINS
6029000000-E	SP	100	LF	SAFETY FENCE
6030000000-E	1630	60	CY	SILT EXCAVATION
6036000000-E	1631	3000	SY	MATTING FOR EROS CONTROL
6038000000-E	SP	60	SY	PERM SOIL REINF MAT
6042000000-E	1632	85	LF	1/4" HARDWARE CLOTH
6071020000-E	SP	5	LB	POLYACRYLAMIDE (PAM)
6084000000-E	1660	1.5	ACR	SEEDING AND MULCHING
6090000000-E	1661	50	LB	SEED FOR REPAIR SEEDING
6093000000-E	1661	0.25	TON	FERT FOR REPAIR SEEDING
6096000000-E	1662	50	LB	SEED FOR SUPP SEEDING
6108000000-E	1665	0.75	TON	FERTILIZER TOPDRESSING
6117000000-N	SP	7	EA	RESPONSE FOR EROS CONTROL
8035000000-N	402	1	LS	REMV EXIST STR (12+43.84)
8121000000-N	412	1	LS	UNCL STR EXCAV (12+43.84)
8182000000-E	420	37.6	CY	CLASS A CONCRETE (BRIDGE)
8210000000-N	422	1	LS	BRG APPR SLAB (12+43.84)
8217000000-E	425	4598	LB	REINF STEEL (BRIDGE)
8364000000-E	450	425	LF	HP12X53 PILES
8391000000-N	450	10	EA	STEEL PILE POINTS
8505000000-E	460	100.25	LF	VERT CONC BARRIER RAIL
8608000000-E	876	170	TON	RIP RAP II (2'-0")
8622000000-E	876	112	SY	GEOTEXTILE FOR DRAINAGE
8657000000-N	430	1	LS	ELASTOMERIC BEARINGS
8762000000-E	430	450	LF	3'-0"x1'-9" PRESTR SLABS

5/28/99
3/20/2014
X:\PBridge 190184\Project Production\Roadway\Proj\B190184_Rdy_sum.dgn
3:14:20 PM

12/06/07

COMPUTED BY: JMT DATE: 2/2012
CHECKED BY: RJD DATE: 10/2012

STATE OF NORTH CAROLINA
DIVISION OF HIGHWAYS

PROJECT REFERENCE NO.	SHEET NO.
17BP.14.R.59	3-A

SUMMARY OF EARTHWORK

STATION	STATION	UNCL. EXCAV.	EMBANK. +%	BORROW	WASTE
-L- STA 10+25.00	-L- STA 12+17.71 (BR)	640	12		628
-Y1- STA 10+25.00	-Y1- STA 11+90.26	269	3		276
SUBTOTALS:		909	15		894
-L- STA 12+69.96 (BR)	-L- STA 14+50.00	131	31		100
SUBTOTALS:		131	31		100
SUMMARIES SUBTOTAL		1040	46		994
PROJECT TOTALS:		1040	46		994
GRAND TOTALS:		1040	46		994
SAY:		1050			

EST. DDE = 5 CY
EST UNDERCUT = 50 CY
EST SELECT GRANULAR MATERIAL = 50 CY
EST FABRIC FOR SOIL STABILIZATION = 50 SY

PAVEMENT REMOVAL SUMMARY

PHASE	SURVEY LINE	STATION	STATION	LOCATION LT/RT/CL	YD²
PHASE 1	-L-	12+46.82	13+16.50	LT	60.01
	-L-	13+16.50	13+30.38	LT	13.21
	-L-	13+30.38	13+55.56	LT	18.91
PHASE 2	-L-	12+46.78	13+15.84	LT	61.47
	-L-	13+15.84	13+29.86	LT	12.48
	-L-	13+29.86	13+56.56	LT	23.97
	-L-	13+56.56	13+71.10	LT	14.04
	-L-	13+71.10	14+20.73	LT	22.31
				TOTAL:	226.40
				SAY:	235

NOTE: PAVEMENT REMOVAL QUANTITIES BASED ON TRAFFIC CONTROL PHASING. SEE TMP PLANS.
PHASE 1: REMOVE PAVEMENT ON RIGHT SIDE OF EXISTING McCLELLAND ROAD
PHASE 2: REMOVE PAVEMENT ON LEFT SIDE OF EXISTING McCLELLAND ROAD

NOTE: APPROXIMATE QUANTITIES ONLY. UNCLASSIFIED EXCAVATION, FINE GRADING, CLEARING AND GRUBBING, AND REMOVAL OF EXISTING PAVEMENT WILL BE PAID FOR AT THE CONTRACT LUMP SUM PRICE FOR "GRADING."

SPECIAL SHOULDER BERM CURB SUMMARY

SURVEY LINE	STATION	STATION	LENGTH
-L-, LT	12+03.00	12+06.71	3.71
-L-, RT	12+03.00	12+06.71	3.71
-L-, LT	12+81.49	12+89.00	7.51
-L-, RT	12+80.49	12+84.00	3.51
		TOTAL:	18.44
		SAY:	20.00

NOTE:
INVERT ELEVATIONS INDICATED ARE FOR BID PURPOSES ONLY AND SHALL NOT BE USED FOR PROJECT CONSTRUCTION STAKEOUT.
SEE "STANDARD SPECIFICATIONS FOR ROADS AND STRUCTURES, SECTION 300-5".

LIST OF PIPES, ENDWALLS, ETC. (FOR PIPES 48" & UNDER)

STATION	LOCATION (LT,RT, OR CL)	STRUCTURE NO. FROM	STRUCTURE NO. TO	TOP ELEVATION	INVERT ELEVATION	INVERT ELEVATION	SLOPE CRITICAL	DRAINAGE PIPE (RCP, CSP, CAAP, HDPE, or PVC) SIZE: 12"	15"	18"	24"	30"	36"	42"	48"
								THICKNESS OR GAUGE							
-L- STA. 12+91	LT	0401		1976.08											
-L- STA. 13+23	LT	0402			1973.03	1972.96									
-L- STA. 13+64	LT	0403			1973.19	1973.11									
-Y1- STA. 11+70	CL	0404			1973.50	1972.00									
TOTALS															

C.S. PIPE (UNLESS NOTED OTHRWISE) SIZE: 12"	15"	18"	24"	30"	36"	42"	48"
THICKNESS OR GAUGE							
	.064	.064	.064	.079	.079	.109	.109

CLASS III R.C. PIPE (UNLESS OTHERWISE NOTED) SIZE: 12"	15"	18"	24"	30"	36"	42"	48"
		56					
		56					

15" SIDE DRAIN PIPE	18" SIDE DRAIN PIPE	24" SIDE DRAIN PIPE
16		
20		
36		

ENDWALLS STD. 838.01, STD. 838.11 OR STD. 838.80 (UNLESS NOTED OTHERWISE) CU. YDS. R.C.P.	C.S.P.

QUANTITIES FOR DRAINAGE STRUCTURES * TOTAL L.F. FOR PAY QUANTITY SHALL BE COL. 'A' + (1.3 X COL. B') PER EACH (0' THRU 5.0')	LIN. *FT. A 5.0' THRU 10.0'	LIN. *FT. B 10.0' AND ABOVE

C.B. STD. 840.01 OR STD. 840.02

FRAME, GRATES AND HOOD STANDARD 840.03 TYPE OF GRATE E	F	G

SPECIAL MODIFIED CONCRETE FLUME
1
1

CORR. STEEL ELBOWS NO. & SIZE	CONC. COLLARS CL. "B" C.Y. STD 840.72	CONC. & BRICK PIPE PLUG, C.Y. STD. 840.71	PIPE REMOVAL LIN.FT.	REMARKS
				SEE DETAIL SHEET 2-D
			40	REMOVE EXISTING 18" PIPE
			40	

ABBREVIATIONS

C.B.	CATCH BASIN
N.D.I.	NARROW DROP INLET
D.I.	DROP INLET
G.D.I.	GRATED DROP INLET
G.D.I. (N.S.)	GRATED DROP INLET (NARROW SLOT)
J.B.	JUNCTION BOX
M.H.	MANHOLE
T.B.D.I.	TRAFFIC BEARING DROP INLET
T.B.J.B.	TRAFFIC BEARING JUNCTION BOX

"N" = DISTANCE FROM EDGE OF LANE TO FACE OF GUARDRAIL.
TOTAL SHOULDER WIDTH = DISTANCE FROM EDGE OF TRAVEL LANE TO SHOULDER BREAK POINT.
FLARE LENGTH = DISTANCE FROM LAST SECTION OF PARALLEL GUARDRAIL TO END OF GUARDRAIL.
W = TOTAL WIDTH OF FLARE FROM BEGINNING OF TAPER TO END OF GUARDRAIL.
G = GATING IMPACT ATTENUATOR TYPE 350
NG = NON-GATING IMPACT ATTENUATOR TYPE 350

GUARDRAIL SUMMARY

SURVEY LINE	BEG. STA.	END STA.	LOCATION	LENGTH STRAIGHT	LENGTH SHOP CURVED	LENGTH DOUBLE FACED	WARRANT POINT APPROACH END	WARRANT POINT TRAILING END	"N" DIST. FROM E.O.L.	TOTAL SHOUL. WIDTH	FLARE LENGTH APPROACH END	FLARE LENGTH TRAILING END	W APPROACH END	W TRAILING END	ANCHORS TYPE III	ANCHORS TL-2	ANCHORS SHOP CURVE TYPE III	ANCHORS AT-1	IMPACT ATTENUATOR TYPE 350 EA	IMPACT ATTENUATOR TYPE 350 G	IMPACT ATTENUATOR TYPE 350 NG	SINGLE FACED GUARDRAIL	REMOVE EXISTING GUARDRAIL	REMOVE AND STOCKPILE EXISTING GUARDRAIL	REMARKS
-L-	11+61.46	12+17.71 (BR)	RT.	56.25					3.4167	6.4167					1	1									GUARDRAIL CALCULATED USING SUBREGIONAL TIER GUIDELINES
-Y1-	11+42.71	11+84.77 (BR)	LT.		56.25				3.4167	6.4167						1	1								GUARDRAIL CALCULATED USING SUBREGIONAL TIER GUIDELINES
-L-	12+69.96 (BR)	13+26.21	RT.	56.25					3.4167	6.4167					1	1									GUARDRAIL CALCULATED USING SUBREGIONAL TIER GUIDELINES
-L-	12+69.96 (BR)	13+12.19	LT.	50.00	12.50				3.4167	6.4167					1			1							GUARDRAIL CALCULATED USING SUBREGIONAL TIER GUIDELINES
			SUBTOTALS	162.50	68.75																				
			ANCHOR DEDUCTION	-112.50	-43.75																				
			TOTAL	50.0	25.00																				
			SAY	50	50																				

ANCHOR DEDUCTION
TYPE III: 3 @ 18.75' = 56.25'
CURVED TYPE III: 1 @ 18.75' = 18.75'
TYPE AT-1: 1 @ 6.25' = 6.25'
TYPE TL-2: 3 @ 25' = 75'
GRAND TOTAL = 156.25'
ADDITIONAL GUARDRAIL POSTS = 5

3/20/2014
X:\P\B\Bridge 190184\Project Production\Roadway\Proj\B190184_Rdy_sum.dgn
3:41:41 PM

8/17/99

REVISIONS

PROJECT REFERENCE NO.	SHEET NO.
17BP.14.R.59	4
R/W SHEET NO.	

ROADWAY DESIGN ENGINEER

NORTH CAROLINA PROFESSIONAL SEAL 029473 ENGINEER JASON M. TALLEY

3-20-2014

HYDRAULICS ENGINEER

NORTH CAROLINA PROFESSIONAL SEAL 18442 ENGINEER RICHARD LEON BOKLAGE

3-20-2014

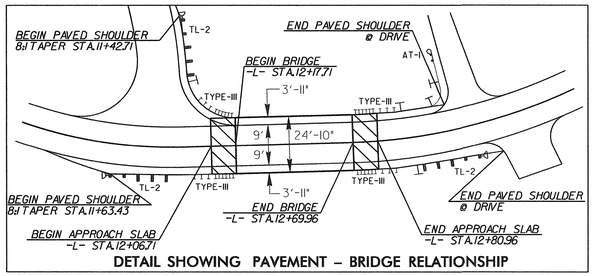

DETAIL SHOWING PAVEMENT – BRIDGE RELATIONSHIP

NAD 83/NSRS 2007

-L- CURVE DATA

PI Sta 11+58.05
Δ = 20° 44' 24.4" (LT)
D = 28° 38' 52.4"
L = 72.40'
T = 36.60'
R = 200.00'
RO = SEE PLANS

PI Sta 13+20.56
Δ = 23° 51' 31.9" (LT)
D = 22° 55' 05.9"
L = 104.10'
T = 52.82'
R = 250.00'
RO = SEE PLANS

PI Sta 14+59.12
Δ = 51° 43' 57.4" (RT)
D = 31° 49' 51.6"
L = 162.52'
T = 87.27'
R = 180.00'
RO = SEE PLANS

-Y1- CURVE DATA

PI Sta 11+16.89
Δ = 48° 37' 44.8" (RT)
D = 34° 43' 29.0"
L = 140.04'
T = 74.55'
R = 165.00'
RO = SEE PLANS

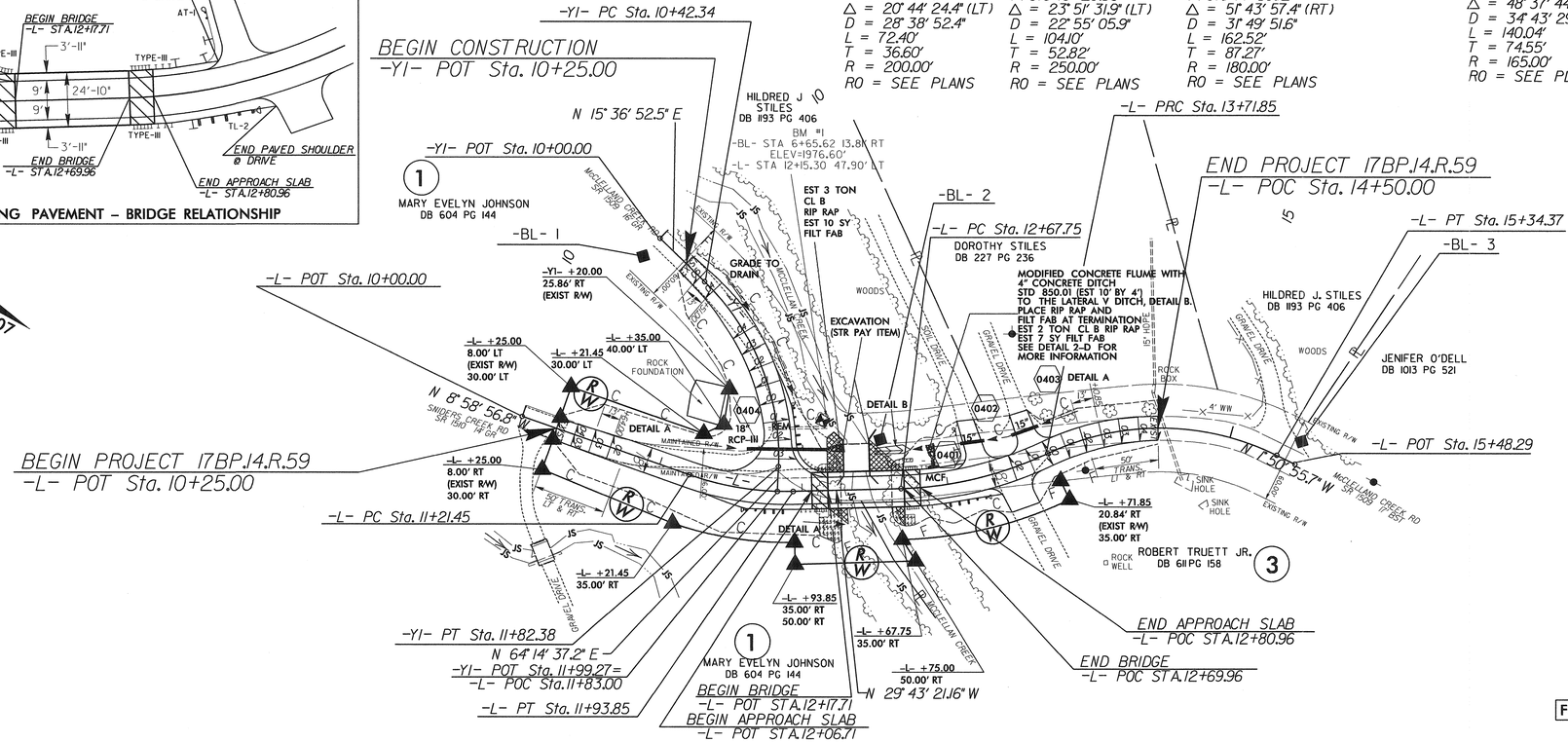

DETAIL A
SPECIAL CUT DITCH
(Not to Scale)

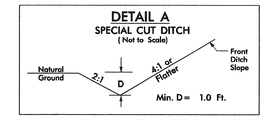

FROM -L- STA. 11+00.00 TO -L- STA. 11+50.00 LT.
FROM -L- STA. 12+00.00 TO -L- STA. 12+32.00 RT.
FROM -L- STA 12+70.00 TO -L- STA. 14+00.00 LT.

DETAIL B
LATERAL 'V' DITCH
(Not to Scale)

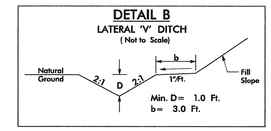

FROM -L- STA. 12+50.00 TO -L- STA. 12+70.00 LT.

BEGIN SSBC LT -L- STA. 12+03.00 TO BEGIN APPROACH SLAB
BEGIN SSBC RT -L- STA. 12+03.00 TO BEGIN APPROACH SLAB
BEGIN SSBC LT END APPROACH SLAB TO -L- STA. 12+89.00
BEGIN SSBC RT END APPROACH SLAB TO -L- STA. 12+84.00

NOTE: 25' RADII USED AT -Y1-
NOTE: 10' RADII USED AT DRIVES
BRIDGE APPROACH SLAB

FOR STRUCTURE PLANS, SEE SHEET S-1 THRU S-13

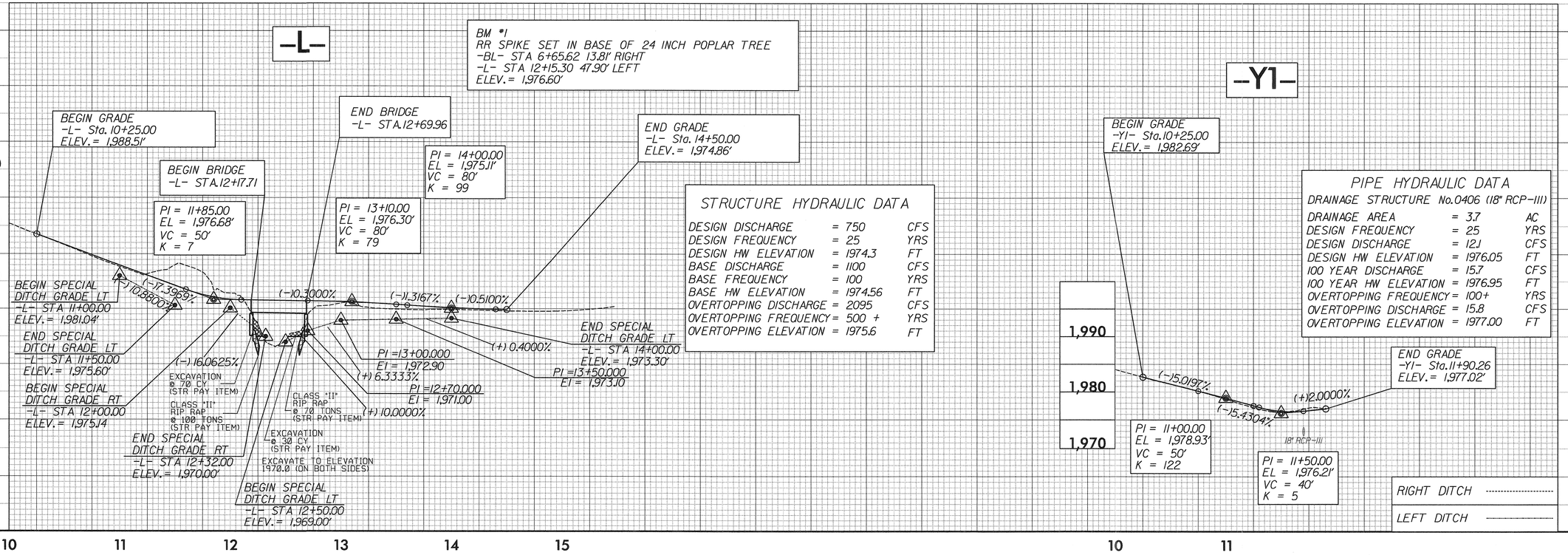

STRUCTURE HYDRAULIC DATA

DESIGN DISCHARGE	= 750	CFS
DESIGN FREQUENCY	= 25	YRS
DESIGN HW ELEVATION	= 1974.3	FT
BASE DISCHARGE	= 1100	CFS
BASE FREQUENCY	= 100	YRS
BASE HW ELEVATION	= 1974.56	FT
OVERTOPPING DISCHARGE	= 2095	CFS
OVERTOPPING FREQUENCY	= 500 +	YRS
OVERTOPPING ELEVATION	= 1975.6	FT

PIPE HYDRAULIC DATA
DRAINAGE STRUCTURE No.0406 (18" RCP-III)

DRAINAGE AREA	= 3.7	AC
DESIGN FREQUENCY	= 25	YRS
DESIGN DISCHARGE	= 12.1	CFS
DESIGN HW ELEVATION	= 1976.05	FT
100 YEAR DISCHARGE	= 15.7	CFS
100 YEAR HW ELEVATION	= 1976.95	FT
OVERTOPPING FREQUENCY	= 100+	YRS
OVERTOPPING DISCHARGE	= 15.8	CFS
OVERTOPPING ELEVATION	= 1977.00	FT

RIGHT DITCH ----------

LEFT DITCH ----------

3/20/2014
8:18:18 AM
dgn

I:\Bridge 190184\Project Production\Roadway\Proj\B190184_Rdy_psh_4.dgn

STATE OF NORTH CAROLINA
DIVISION OF HIGHWAYS

TRANSPORTATION MANAGEMENT PLAN

CHEROKEE COUNTY

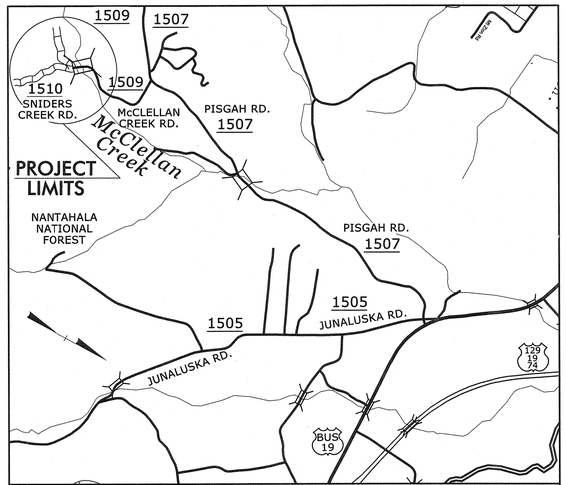

VICINITY MAP

LOCATION: BRIDGE N0. 184 ON SR 1509 OVER MCCLELLAN CREEK

INDEX OF SHEETS

SHEET NO.	TITLE
TMP-1	TITLE SHEET AND INDEX OF SHEETS
TMP-1A	LIST OF APPLICABLE ROADWAY STANDARD DRAWINGS, LEGEND AND MANAGEMENT STRATEGIES
TMP-1B	TRANSPORTATION OPERATIONS PLAN:GENERAL NOTES
TMP-2	TEMPORARY TRAFFIC CONTROL PHASING
TMP-3	TEMPORARY TRAFFIC CONTROL PHASE I
TMP-4	TEMPORARY TRAFFIC CONTROL PHASE II
TMP-5	TEMPORARY TRAFFIC CONTROL PHASE III
TMP-6	DETAIL FOR WORK ZONE SIGNING

SHEET NO.
TMP-1

17BP.14.R.59

WBS ELEMENT:

RS&H
IMPROVING YOUR WORLD
RS&H Architects-Engineers-Planners, Inc.

RS&H
ARCHITECTS-ENGINEERS-PLANNERS, INC.
1520 SOUTH BLVD, SUITE 200
CHARLOTTE, NC 28203

KENNETH HERRING, PE *PROJECT ENGINEER*

JASON TALLEY, PE *PROJECT DESIGN ENGINEER*

APPROVED: J. Talley
DATE: 3-20-2014

SEAL

NORTH CAROLINA PROFESSIONAL SEAL 029473 ENGINEER JASON M. TALLEY

2/15/2014
X:\P\Bridge 19084\Project Production\Traffic\Traffic Control\19084_TC_TMP.dgn
User:JTalley

PROJ. REFERENCE NO.	SHEET NO.
17BP.14.R.59	TMP-1A

ROADWAY STANDARD DRAWINGS

THE FOLLOWING ROADWAY STANDARDS AS SHOWN IN "ROADWAY STANDARD DRAWINGS" - PROJECT SERVICES UNIT - N.C. DEPARTMENT OF TRANSPORTATION - RALEIGH, N.C., DATED JANUARY 2012 ARE APPLICABLE TO THIS PROJECT AND BY REFERENCE HEREBY ARE CONSIDERED A PART OF THESE PLANS:

STD. NO.	TITLE
1101.01	WORK ZONE WARNING SIGNS
1101.02	TEMPORARY LANE CLOSURES
1101.03	TEMPORARY ROAD CLOSURES
1101.04	TEMPORARY SHOULDER CLOSURES
1101.05	WORK ZONE VEHICLE ACCESSES
1101.06	WARNING SIGNS FOR BLASTING ZONES
1101.11	TRAFFIC CONTROL DESIGN TABLES
1110.01	STATIONARY WORK ZONE SIGNS
1110.02	PORTABLE WORK ZONE SIGNS
1115.01	FLASHING ARROW BOARDS
1130.01	DRUMS
1135.01	CONES
1145.01	BARRICADES
1150.01	FLAGGING DEVICES
1160.01	TEMPORARY CRASH CUSHION
1165.01	WORK VEHICLE LIGHTING SYSTEMS AND TMA DELINEATION
1170.01	PORTABLE CONCRETE BARRIER
1180.01	SKINNY - DRUM
1205.01	PAVEMENT MARKINGS - LINE TYPES AND OFFSETS
1205.02	PAVEMENT MARKINGS - TWO LANE AND MULTILANE ROADWAYS
1205.03	PAVEMENT MARKINGS - EXITS AND ENTRANCE RAMPS
1205.04	PAVEMENT MARKINGS - INTERSECTIONS
1205.05	PAVEMENT MARKINGS - TURN LANES
1205.06	PAVEMENT MARKINGS - LANE DROPS
1205.07	PAVEMENT MARKINGS - PEDESTRIAN CROSSWALKS
1205.08	PAVEMENT MARKINGS - SYMBOLS AND WORD MESSAGES
1205.09	PAVEMENT MARKINGS - PAINTED ISLANDS
1205.10	PAVEMENT MARKINGS - SCHOOL AREAS
1205.11	PAVEMENT MARKINGS - RAILROAD CROSSINGS
1205.12	PAVEMENT MARKINGS - BRIDGES
1205.13	PAVEMENT MARKINGS - LANE REDUCTIONS
1250.01	RAISED PAVEMENT MARKERS - INSTALLATION SPACING
1251.01	RAISED PAVEMENT MARKERS - (PERMANENT AND TEMPORARY)
1261.01	GUARDRAIL AND BARRIER DELINEATORS - INSTALLATION SPACING
1261.02	GUARDRAIL AND BARRIER DELINEATORS - TYPES AND MOUNTING
1262.01	GUARDRAIL END DELINEATION
1264.01	OBJECT MARKERS - TYPES
1264.02	OBJECT MARKERS - INSTALLATION

MANAGEMENT STRATEGIES

- DURING CONSTRUCTION, SR 1509 TRAFFIC WILL BE PLACED IN A ONE-LANE, TWO-WAY PATTERN ON THE TEMPORARY ONSITE DETOUR.
- FLAGGERS PLACED AT THE BEGINNING AND END OF AN ONSITE DETOUR WILL MANAGE SR 1509 TRAFFIC.
- THE TIE IN CONSTRUCTION, TRAFFIC SHIFTS, PLACEMENT OF FINAL SURFACE COURSE AND PAVEMENT MARKINGS WILL BE PERFORMED USING FLAGGER OPERATIONS.

LEGEND

GENERAL

- DIRECTION OF TRAFFIC FLOW
- DIRECTION OF PEDESTRIAN TRAFFIC FLOW
- EXIST. PVMT.
- NORTH ARROW
- PROPOSED PVMT.
- PROPOSED CONSTRUCTION
- PAVEMENT REMOVAL
- PAVEMENT MILLING

TRAFFIC CONTROL DEVICES

- BARRICADE (TYPE III)
- CONE
- DRUM SKINNY DRUM TUBULAR MARKER
- TEMPORARY CRASH CUSHION
- FLASHING ARROW PANEL (TYPE C)
- FLAGGER
- LAW ENFORCEMENT
- TRUCK MOUNTED IMPACT ATTENUATOR (TMIA)
- CHANGEABLE MESSAGE SIGN

TEMPORARY PAVEMENT MARKING

NONE

TEMPORARY SIGNING

- PORTABLE SIGN
- STATIONARY SIGN
- STATIONARY OR PORTABLE SIGN

SIGNALS

- TEMPORARY PORTABLE TRAFFIC SIGNAL SYSTEM

PAVEMENT MARKINGS

- EXISTING LINES
- TEMPORARY LINES

PAVEMENT MARKERS

- CRYSTAL/CRYSTAL
- CRYSTAL/RED
- YELLOW/YELLOW

PAVEMENT MARKING SYMBOLS

- PAVEMENT MARKING SYMBOLS

APPROVED: [signature] DATE: 3-20-2014

SEAL

NORTH CAROLINA PROFESSIONAL SEAL 029473 ENGINEER JASON M. TALLEY

RS&H

IMPROVING YOUR WORLD

RS&H Architects-Engineers-Planners, Inc.

ROADWAY STANDARD DRAWINGS, LEGEND, AND MANAGEMENT STRATEGIES

2/15/2014
X:\P-Bridge 19084\Project Production\Traffic\Traffic Control\19084_TC_TMP.dgn
User:Talleyj

PROJ. REFERENCE NO.	SHEET NO.
17BP.14.R.59	TMP-1B

GENERAL NOTES

CHANGES MAY BE REQUIRED WHEN PHYSICAL DIMENSIONS IN THE DETAIL DRAWINGS, STANDARD DETAILS, AND ROADWAY DETAILS ARE NOT ATTAINABLE TO MEET FIELD CONDITIONS OR RESULT IN DUPLICATE OR UNDESIRED OVERLAPPING OF DEVICES. MODIFICATION MAY INCLUDE: MOVING, SUPPLEMENTING, COVERING, OR REMOVAL OF DEVICES AS DIRECTED BY THE ENGINEER.

THE FOLLOWING GENERAL NOTES APPLY AT ALL TIMES FOR THE DURATION OF THE CONSTRUCTION PROJECT EXCEPT WHEN OTHERWISE NOTED IN THE PLAN OR DIRECTED BY THE ENGINEER.

LANE AND SHOULDER CLOSURE REQUIREMENTS

A) REMOVE LANE CLOSURE DEVICES FROM THE LANE WHEN WORK IS NOT BEING PERFORMED BEHIND THE LANE CLOSURE OR WHEN A LANE CLOSURE IS NO LONGER NEEDED OR AS DIRECTED BY THE ENGINEER.

B) WHEN PERSONNEL AND/OR EQUIPMENT ARE WORKING WITHIN 15 FT OF AN OPEN TRAVEL LANE, CLOSE THE NEAREST OPEN SHOULDER USING ROADWAY STANDARD DRAWING NO. 1101.04 UNLESS THE WORK AREA IS PROTECTED BY BARRIER OR GUARDRAIL OR A LANE CLOSURE IS INSTALLED.

C) WHEN PERSONNEL AND/OR EQUIPMENT ARE WORKING ON THE SHOULDER ADJACENT TO AN UNDIVIDED FACILITY AND WITHIN 5 FT OF AN OPEN TRAVEL LANE, CLOSE THE NEAREST OPEN TRAVEL LANE USING ROADWAY STANDARD DRAWING NO. 1101.02 UNLESS THE WORK AREA IS PROTECTED BY BARRIER OR GUARDRAIL.

WHEN PERSONNEL AND/OR EQUIPMENT ARE WORKING ON THE SHOULDER ADJACENT TO A DIVIDED FACILITY AND WITHIN 10 FT OF AN OPEN TRAVEL LANE, CLOSE THE NEAREST OPEN TRAVEL LANE USING ROADWAY STANDARD DRAWING NO. 1101.02 UNLESS THE WORK AREA IS PROTECTED BY BARRIER OR GUARDRAIL.

D) WHEN PERSONNEL AND/OR EQUIPMENT ARE WORKING WITHIN A LANE OF TRAVEL OF AN UNDIVIDED OR DIVIDED FACILITY, CLOSE THE LANE ACCORDING TO THE TRAFFIC CONTROL PLANS, ROADWAY STANDARD DRAWINGS, OR AS DIRECTED BY THE ENGINEER. CONDUCT THE WORK SO THAT ALL PERSONNEL AND/OR EQUIPMENT REMAIN WITHIN THE CLOSED TRAVEL LANE.

E) DO NOT WORK SIMULTANEOUSLY WITHIN 15 FT ON BOTH SIDES OF AN OPEN TRAVELWAY, RAMP, OR LOOP WITHIN THE SAME LOCATION UNLESS PROTECTED WITH GUARDRAIL OR BARRIER.

F) PROVIDE TRAFFIC CONTROL FOR APPROPRIATE LANE CLOSURES FOR SURVEYING DONE BY THE DEPARTMENT.

PAVEMENT EDGE DROP OFF REQUIREMENTS

G) BACKFILL AT A 6:1 SLOPE UP TO THE EDGE AND ELEVATION OF EXISTING PAVEMENT IN AREAS ADJACENT TO AN OPENED TRAVEL LANE THAT HAS AN EDGE OF PAVEMENT DROP-OFF AS FOLLOWS:

BACKFILL DROP-OFFS THAT EXCEED 2 INCHES ON ROADWAYS WITH POSTED SPEED LIMITS OF 45 MPH OR GREATER.

BACKFILL DROP-OFFS THAT EXCEED 3 INCHES ON ROADWAYS WITH POSTED SPEED LIMITS LESS THAN 45 MPH.

BACKFILL WITH SUITABLE COMPACTED MATERIAL, AS APPROVED BY THE ENGINEER, AT NO EXPENSE TO THE DEPARTMENT.

H) DO NOT EXCEED A DIFFERENCE OF 2 INCHES IN ELEVATION BETWEEN OPEN LANES OF TRAFFIC FOR NOMINAL LIFTS OF 1.5 INCHES. INSTALL ADVANCE WARNING "UNEVEN LANES" SIGNS (W8-11) 200' IN ADVANCE AND A MINIMUM OF EVERY HALF MILE THROUGHOUT THE UNEVEN AREA.

TRAFFIC PATTERN ALTERATIONS

I) NOTIFY THE ENGINEER TWENTY ONE (21) CALENDAR DAYS PRIOR TO ANY TRAFFIC PATTERN ALTERATION.

SIGNING

J) INSTALL ADVANCE WORK ZONE WARNING SIGNS WHEN WORK IS WITHIN 40 FT FROM THE EDGE OF TRAVEL LANE AND NO MORE THAN THREE (3) DAYS PRIOR TO THE BEGINNING OF CONSTRUCTION.

K) PROVIDE SIGNING AND DEVICES REQUIRED TO CLOSE THE ROAD ACCORDING TO THE ROADWAY STANDARD DRAWINGS AND TRAFFIC CONTROL PLANS.

PROVIDE SIGNING REQUIRED FOR THE OFF-SITE DETOUR ROUTE AS SHOWN IN THE TRAFFIC CONTROL PLANS.

L) COVER OR REMOVE ALL SIGNS AND DEVICES REQUIRED TO CLOSE THE ROAD WHEN ROAD CLOSURE IS NOT IN OPERATION.

COVER OR REMOVE ALL SIGNS REQUIRED FOR THE OFF-SITE DETOUR WHEN THE DETOUR IS NOT IN OPERATION.

M) ENSURE ALL NECESSARY SIGNING IS IN PLACE PRIOR TO ALTERING ANY TRAFFIC PATTERN.

N) INSTALL BLACK ON ORANGE "DIP" SIGNS (W8-2) AND/OR "BUMP" SIGNS (W8-1) 100' IN ADVANCE OF THE UNEVEN AREA, OR AS DIRECTED BY THE ENGINEER.

TRAFFIC CONTROL DEVICES

O) WHEN LANE CLOSURES ARE NOT IN EFFECT SPACE CHANNELIZING DEVICES IN WORK AREAS NO GREATER IN FEET THAN TWICE THE POSTED SPEED LIMIT (MPH) EXCEPT, 10 FT ON-CENTER IN RADII, AND 3 FT OFF THE EDGE OF AN OPEN TRAVELWAY. REFER TO STANDARD SPECIFICATIONS FOR ROADS AND STRUCTURES SECTIONS 1130 (DRUMS), 1135 (CONES) AND 1180 (SKINNY DRUMS) FOR ADDITIONAL REQUIREMENTS.

P) PLACE TYPE III BARRICADES, WITH "ROAD CLOSED" SIGN R11-2 ATTACHED, OF SUFFICIENT LENGTH TO CLOSE ENTIRE ROADWAY.

Q) PLACE ADDITIONAL SETS OF THREE CHANNELIZING DEVICES DRUMS PERPENDICULAR TO THE EDGE OF TRAVELWAY ON 500 FT CENTERS WHEN UNOPENED LANES ARE CLOSED TO TRAFFIC.

TEMPORARY PAVEMENT MARKINGS AND MARKERS

R) INSTALL TEMPORARY PAVEMENT MARKINGS ON INTERIM LAYERS OF PAVEMENT AS FOLLOWS:

ROAD NAME	MARKING	MARKER
-L- (SR 1510, SNIDERS CREEK ROAD)	COLD APPLIED PLASTIC (TYPE 4)	N/A
-L- (SR 1509, McCLELLAND CREEK ROAD)	COLD APPLIED PLASTIC (TYPE 4)	N/A
-Y1- (SR 1509, McCLELLAND CREEK ROAD)	COLD APPLIED PLASTIC (TYPE 4)	N/A

S) PLACE ONE APPLICATION OF PAINT FOR TEMPORARY TRAFFIC PATTERNS. PLACE A SECOND APPLICATION OF PAINT SIX (6) MONTHS AFTER THE INITIAL APPLICATION AND EVERY SIX MONTHS AS DIRECTED BY THE ENGINEER.

T) TIE PROPOSED PAVEMENT MARKING LINES TO EXISTING PAVEMENT MARKING LINES.

U) REMOVE/REPLACE ANY CONFLICTING/DAMAGED PAVEMENT MARKINGS AND MARKERS BY THE END OF EACH DAY'S OPERATION.

MISCELLANEOUS

V) IN THE EVENT A TIE-IN CANNOT BE MADE IN ONE DAY'S TIME, BRING THE TIE-IN AREA TO AN APPROPRIATE ROADWAY ELEVATION AS DETERMINED BY THE ENGINEER. PLACE BLACK ON ORANGE "LOOSE GRAVEL" SIGNS (W8-7) AND BLACK ON ORANGE "PAVEMENT ENDS" SIGNS (W8-3) 200' AND 200' RESPECTIVELY IN ADVANCE OF THE UNEVEN AREAS. USE DRUMS TO DELINEATE THE EDGE OF ROADWAY ALONG UNPAVED AREAS.

APPROVED: _____ DATE: 3-10-2014

SEAL

NORTH CAROLINA PROFESSIONAL SEAL 029473 ENGINEER JASON M. TALLEY

RS&H
IMPROVING YOUR WORLD
RS&H Architects-Engineers-Planners, Inc.

TRANSPORTATION OPERATIONS PLAN

2/15/2014
X:\P\Bridge 190184\Project Production\Traffic\Traffic Control\190184_TC_TMP.dgn
User:TalleyJ

PROJ. REFERENCE NO.	SHEET NO.
17BP.14.R.59	TMP-2

PHASING

NOTE: MAINTAIN ACCESS TO ALL RESIDENCES WITHIN THE PROJECT LIMITS.

PHASE I

NOTE: PRIOR TO CONSTRUCTION, INSTALL ADVANCE WORK ZONE WARNING SIGNS AS SHOWN ON TMP-6.

USING FLAGGERS (RDS 1101.02, SHEET 1 OF 15) INSTALL TEMPORARY PAVEMENT MARKINGS AND DRUMS FROM -L- STA. 10+25.00 TO -L- STA. 14+50.00 AND FROM -Y1- STA 10+25.00 TO -Y1- STA. 11+56.00 AS SHOWN ON TMP-3.

THE CONTRACTOR SHALL WORK IN A CONTINUOUS MANNER TO COMPLETE THE WORK IN PHASE I, STEP 1 IN ONE WORK PERIOD.

STEP 1: USING RSD 1101.02, SHEET 1 OF 15, FLAGGERS, AND DRUMS COMPLETE THE FOLLOWING AS SHOWN ON TMP-3 AND CONSTRUCTION PLANS:

- SHIFT TRAFFIC TO A ONE-LANE, TWO-WAY PATTERN ON EXISTING SR 1509/1510 -L- LT. FROM 250′ IN ADVANCE OF -L- STA. 10+25.00 +/- TO 250′ PAST -L- STA. 14+50.00 +/-. SHIFT TRAFFIC TO A ONE-LANE, TWO-WAY PATTERN ON EXISTING SR 1509 -Y1- LT. FROM 250′ IN ADVANCE OF 10+25.00 +/- TO 11+99 +/- RT.

- NOTE: THE CONTRACTOR SHALL UTILIZE FLAGGERS, AS DIRECTED BY THE ENGINEER, FOR LANE/ROAD CLOSURES. HOWEVER, DRUMS SHALL BE USED TO DELINEATE THE TRAVEL WAY. PROVIDE MINIMUM OFFSET OF 2′ BETWEEN DRUMS AND TRAVELWAY.

- UNDER INTERMITTENT ROAD CLOSURE AS NEEDED, REMOVE EXISTING RIGHT SIDE BRIDGE RAIL. CUT APPROXIMATELY 10′ OFF RIGHT SIDE OF EXISTING STRUCTURE AND REMOVE. REINSTALL BRIDGE RAIL TO BRIDGE DECK, APPROXIMATELY 9′ FROM EXISTING LEFT SIDE BRIDGE RAIL.

NOTE: CONSTRUCT ANY PROPOSED WIDENING IN SUCH A MANNER THAT PONDING OF WATER WILL NOT OCCUR IN THE TRAVEL LANE.

STEP 2: USING RSD 1101.02, SHEET 1 OF 15, AND FLAGGERS, COMPLETE THE FOLLOWING AS SHOWN ON TMP-3 AND CONSTRUCTION PLANS:

- REMOVE EXISTING ROADWAY BED AS SHOWN FROM -L- STA. 12+46 +/- TO -L- STA. 13+55 +/- OR AS DIRECTED BY ENGINEER. PROVIDE ACCESS TO EXISTING DRIVES ALONG -L-.

- CONSTRUCT -L- PROPOSED CORED SLAB BRIDGE AND ROADWAY APPROACHES UP TO BUT NOT INCLUDING FINAL LAYER OF SURFACE COURSE FROM -L- STA. 10+25 +/- RT. TO -L- STA. 14+50 +\- RT. AND -Y1- 10+25 +/- RT. TO -Y1- STA. 11+99 +/- RT.

- USING INTERMITTENT ROAD CLOSURE AS NEEDED, CONSTRUCT TIE-INS FROM -L- STA. 10+25 RT. TO -L- STA. 11+00 RT. AND FROM -L- STA. 14+00 RT. TO -L- STA. 14+50 RT.

- INSTALL DRUMS AND TYPE III BARRICADES TO KEEP PROPOSED STRUCTURE AND APPROACHES CLOSED TO TRAFFIC FROM -L- STA. 10+25 +/- RT TO -L- STA. 14+50 +/- RT. AND -Y1- 10+25 +/- RT. TO -Y1- STA. 11+99 +/- RT.

- INSTALL PERMANENT GUARDRAIL ON THE RT SIDE OF -L- RT FROM STA. 11+61 +/- TO STA 12+17 +/- AND FROM STA. 12+69 +/- TO STA. 13+26 +/-.

- PLACE TEMPORARY PAVEMENT MARKINGS ON -L- ℄ APPROACHES.

PHASE II

NOTE: THE CONTRACTOR SHALL WORK IN A CONTINUOUS MANNER TO COMPLETE THE WORK IN PHASE II, STEP 1 IN ONE WORK PERIOD.

STEP 1: USING RSD 1101.02, SHEET 1 OF 15, FLAGGERS, AND DRUMS TO DELINEATE THE TRAVEL WAY AND MAINTAIN ONE-LANE, TWO-WAY PATTERN, COMPLETE THE FOLLOWING AS SHOWN ON TMP-4 AND CONSTRUCTION PLANS:

- REMOVE TYPE III BARRICADES FROM -L- RT. APPROACHES.

- INSTALL DRUMS AND TYPE III BARRICADES TO CLOSE EXISTING SR 1509 -Y1- LT. TO TRAFFIC FROM -Y1- STA. 10+25 +/- TO -L- 14+50 +/- LT.

- INSTALL DRUMS AND TYPE III BARRICADES TO CLOSE SR 1510 -L- LT. TO TRAFFIC FROM -L- STA. 10+25 +/- TO BRIDGE AND SHIFT TRAFFIC TO -L- RT. AND -Y1- RT.

NOTE: CONSTRUCT ANY PROPOSED WIDENING IN SUCH A MANNER THAT PONDING OF WATER WILL NOT OCCUR IN THE TRAVEL LANE.

STEP 2: USING RSD 1101.02, SHEET 1 OF 15, AND FLAGGERS, COMPLETE THE FOLLOWING AS SHOWN ON TMP-4 AND CONSTRUCTION PLANS:

- REMOVE REMAINING PORTION OF EXISTING STRUCTURE (LEFT SIDE).

- REMOVE PAVED EXISTING ROADWAY BED AS SHOWN OR DIRECTED BY ENGINEER. REMOVE AND REGRADE EXISTING GRAVEL ROADWAY BED. PROVIDE ACCESS TO EXISTING DRIVES ALONG -L-. USE INCIDENTAL STONE BASE AS DIRECTED BY THE ENGINEER.

- CONSTRUCT REMAINDER OF ROADWAY APPROACHES UP TO BUT NOT INCLUDING FINAL LAYER OF SURFACE COURSE FROM -L- STA. 10+25 +/- RT. TO -L- STA. 11+13 +/- RT., FROM -L- STA. 13+16 +/- RT. TO -L- STA. 14+50 +/- RT. AND FROM -Y1- STA. 10+25 +/- LT. TO -Y1- STA. 11+41 +/- LT.

- INSTALL PERMANENT GUARDRAIL ON THE LEFT SIDE OF -L- LT FROM STA. 11+42.71 TO STA. 11+84.77 AND FROM STA. 12+69.96 TO STA. 13+12.19.

PHASE III

NOTE: CONSTRUCT ANY PROPOSED WIDENING IN SUCH A MANNER THAT PONDING OF WATER WILL NOT OCCUR IN THE TRAVEL LANE.

STEP 1: USING RSD 1101.02, SHEET 1 OF 15, FLAGGERS, AND DRUMS TO DELINEATE THE TRAVEL WAY AND MAINTAIN ONE-LANE, TWO-WAY PATTERN, COMPLETE THE FOLLOWING AS SHOWN ON TMP-5 AND CONSTRUCTION PLANS:

- PLACE THE FINAL SURFACE LAYER, PAVEMENT MARKINGS AND PAVEMENT MARKERS ON -L- STA. 10+25.00 TO -L- STA 14+50.00 AND -Y1- 10+25.00 TO -Y1- 11+99.27 (SEE PMP-2).

STEP 2 - REMOVE SIGNING AND TEMPORARY DEVICES ASSOCIATED WITH ONE-LANE, TWO-WAY TRAFFIC PATTERN.

- OPEN TRAFFIC TO FINAL PATTERN.

APPROVED: J.A. Talley DATE: 3-20-2014

SEAL

NORTH CAROLINA PROFESSIONAL SEAL 029473 ENGINEER JASON M. TALLEY

RS&H

IMPROVING YOUR WORLD

RS&H Architects-Engineers-Planners, Inc.

TEMPORARY TRAFFIC CONTROL PHASING

2/5/2014
X:\P\Bridge 19084\Project Production\Traffic\Traffic Control\19084_TC_TMP.dgn
(User:jalley)

PROJ. REFERENCE NO.	SHEET NO.
17BP.14.R.59	TMP-3

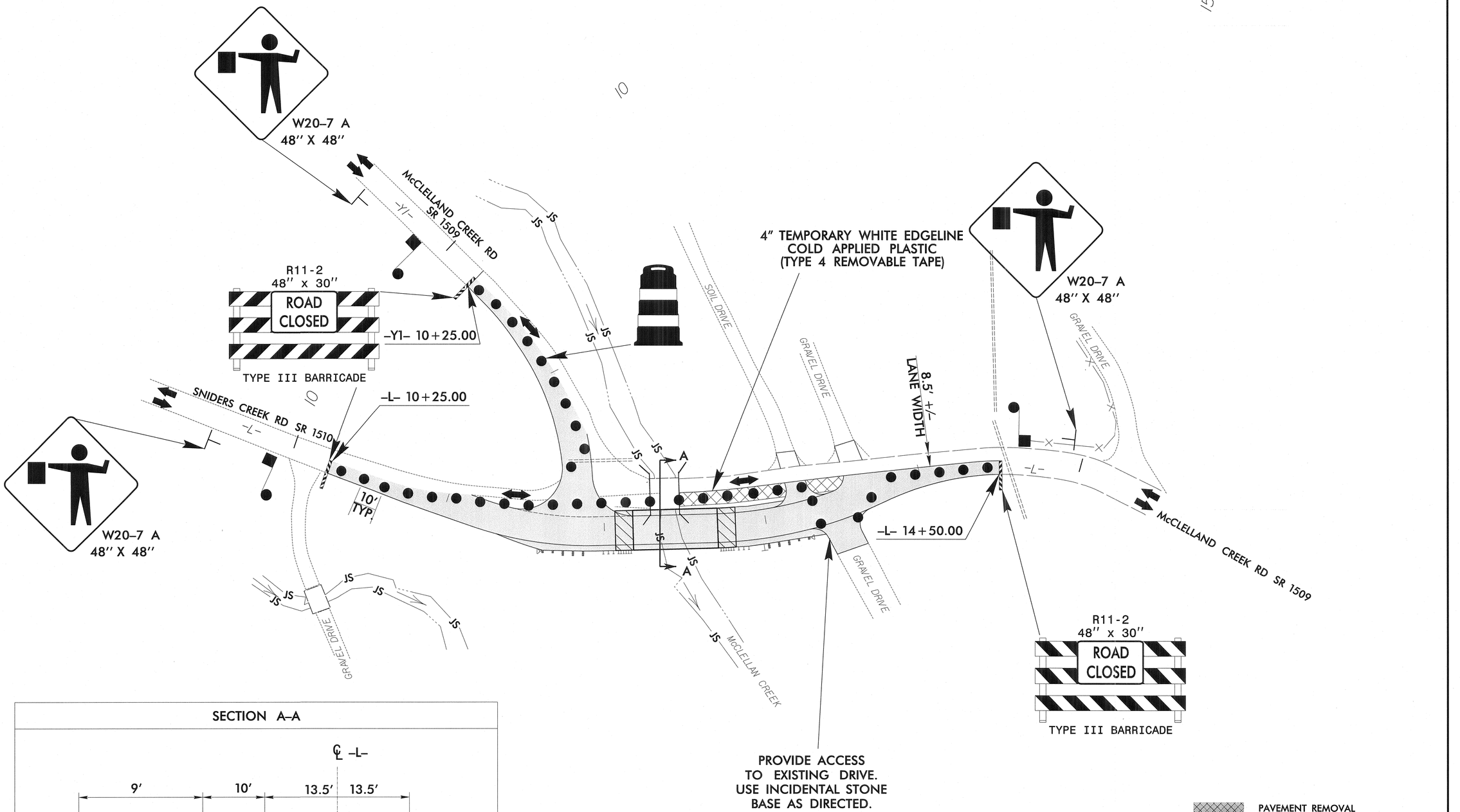

SECTION A–A

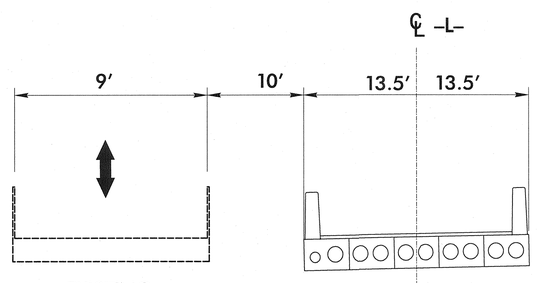

PAVEMENT REMOVAL

PROPOSED CONSTRUCTION

APPROVED: S.A. Talley DATE: 3-10-2014

SEAL

NORTH CAROLINA PROFESSIONAL SEAL 029473 ENGINEER JASON N. TALLEY

RS&H

IMPROVING YOUR WORLD

RS&H Architects-Engineers-Planners, Inc.

TEMPORARY TRAFFIC CONTROL PHASE I

2/15/2014
X:\P\Bridge 190184\Project Production\Traffic\Traffic Control\190184_TC_TMP_3.dgn
User:TalleyJ

PROJ. REFERENCE NO.	SHEET NO.
17BP.14.R.59	TMP-4

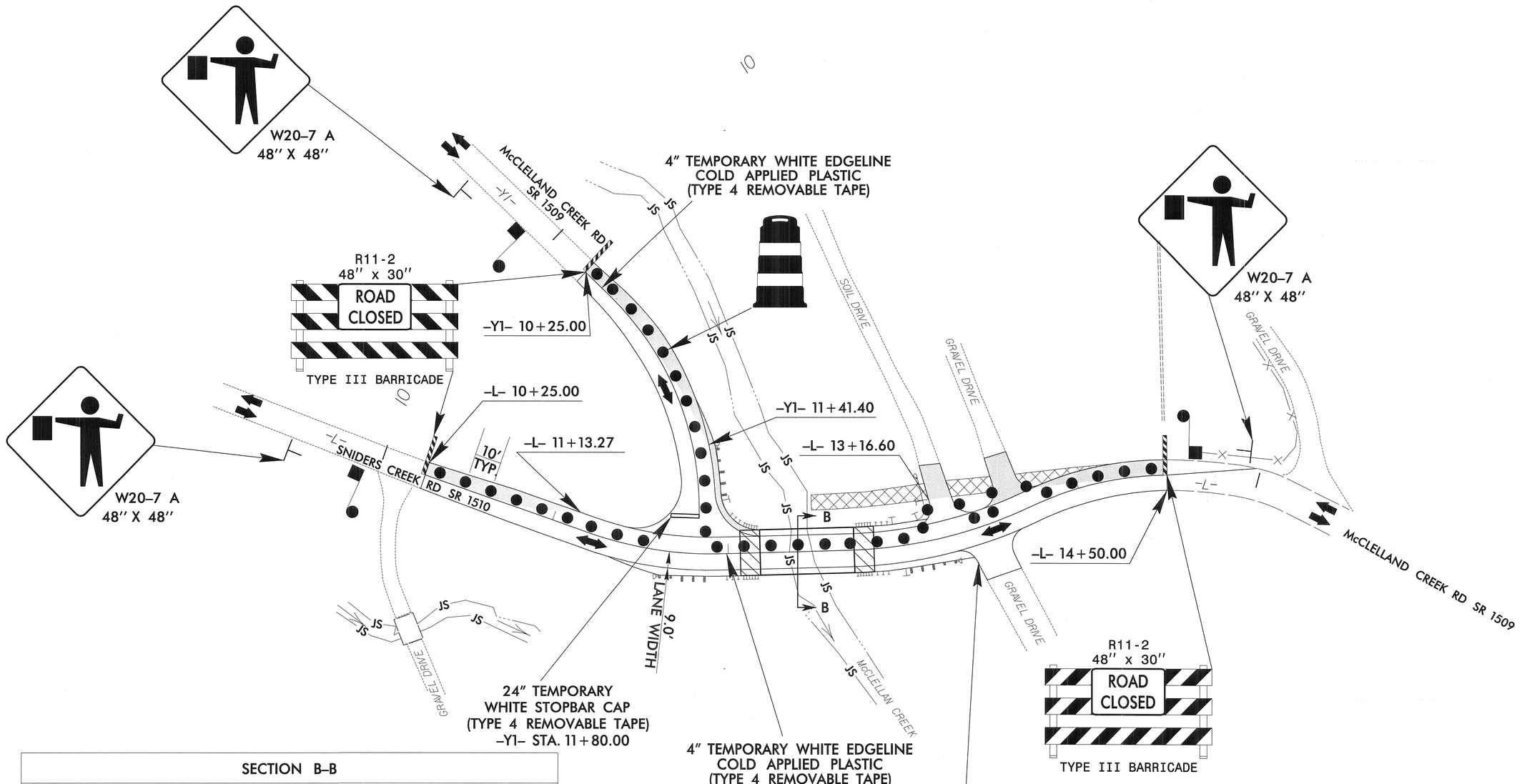

SECTION B–B

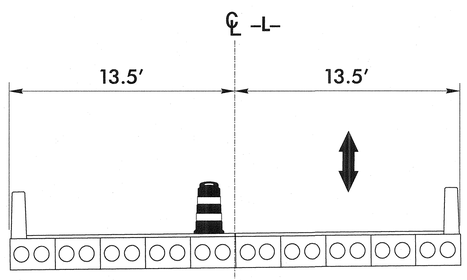

PAVEMENT REMOVAL

PROPOSED CONSTRUCTION

APPROVED: _____ DATE: 3-20-2014

SEAL

NORTH CAROLINA PROFESSIONAL SEAL 029473 ENGINEER JASON W. TALLEY

RS&H
IMPROVING YOUR WORLD
RS&H Architects-Engineers-Planners, Inc.

TEMPORARY TRAFFIC CONTROL PHASE II

2/19/2014
X:\P\Bridge 19084\Project Production\Traffic\Traffic Control\19084_TC_TMP_4.dgn
User:TalleyJ

PROJ. REFERENCE NO.	SHEET NO.
17BP.14.R.59	TMP-5

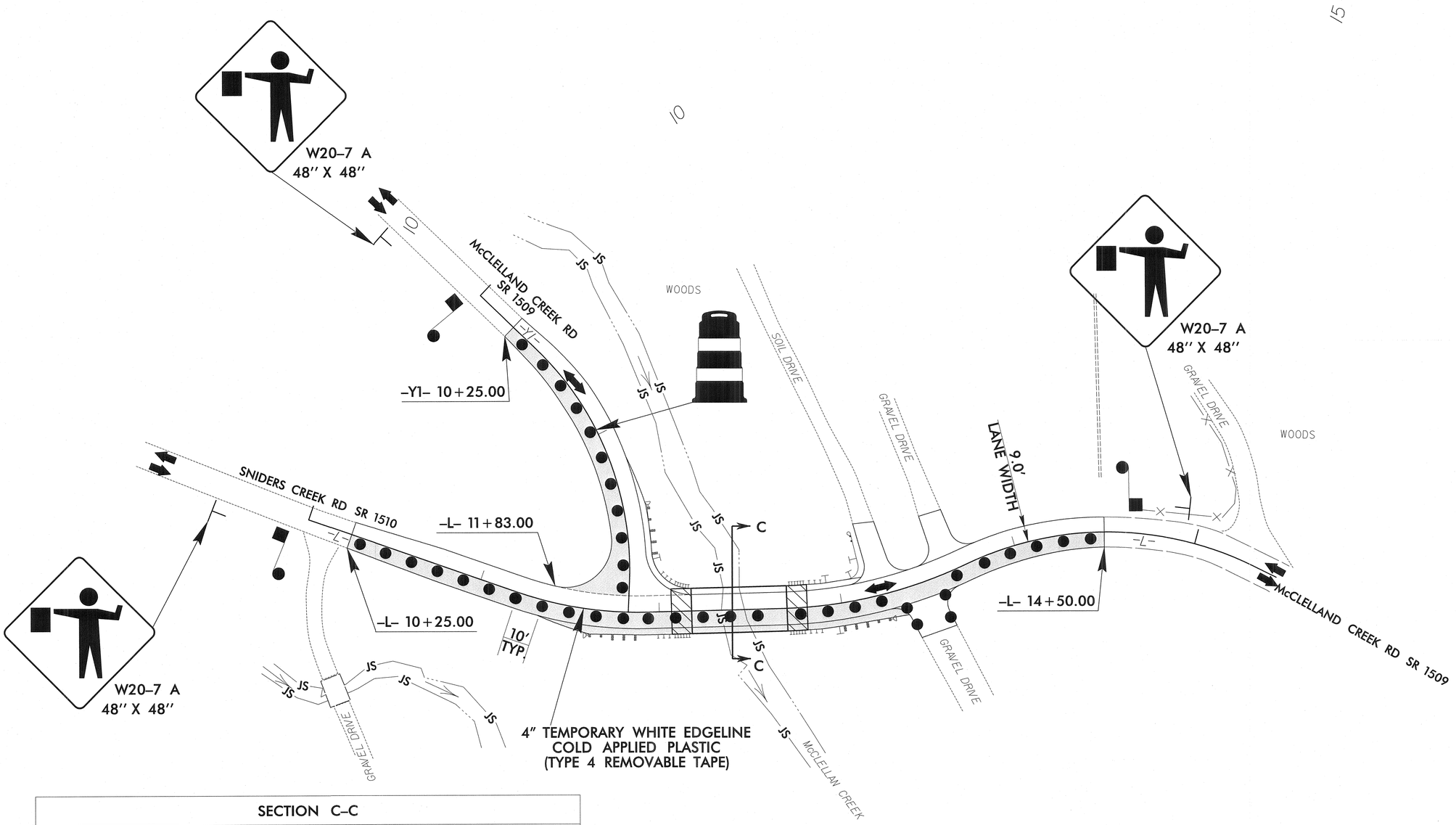

SECTION C–C

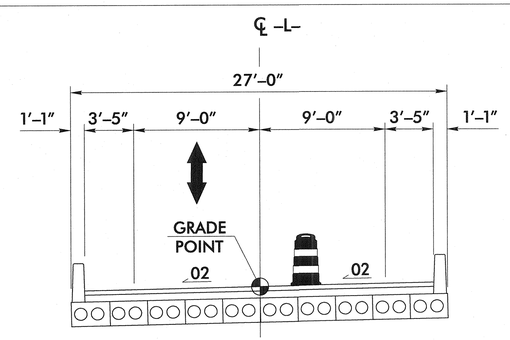

PROPOSED CONSTRUCTION

APPROVED: J.A. Talley DATE: 3-20-2014

SEAL

NORTH CAROLINA PROFESSIONAL SEAL 029473 ENGINEER JASON M. TALLEY

RS&H
IMPROVING YOUR WORLD
RS&H Architects-Engineers-Planners, Inc.

TEMPORARY TRAFFIC CONTROL PHASE III STEP 1

2/19/2014
X:\P\Bridge 190184\Project Production\Traffic\Traffic Control\190184_TC_TMP_5.dgn
User:TalleyJ

PROJ. REFERENCE NO.	SHEET NO.
17BP.14.R.59	TMP-6

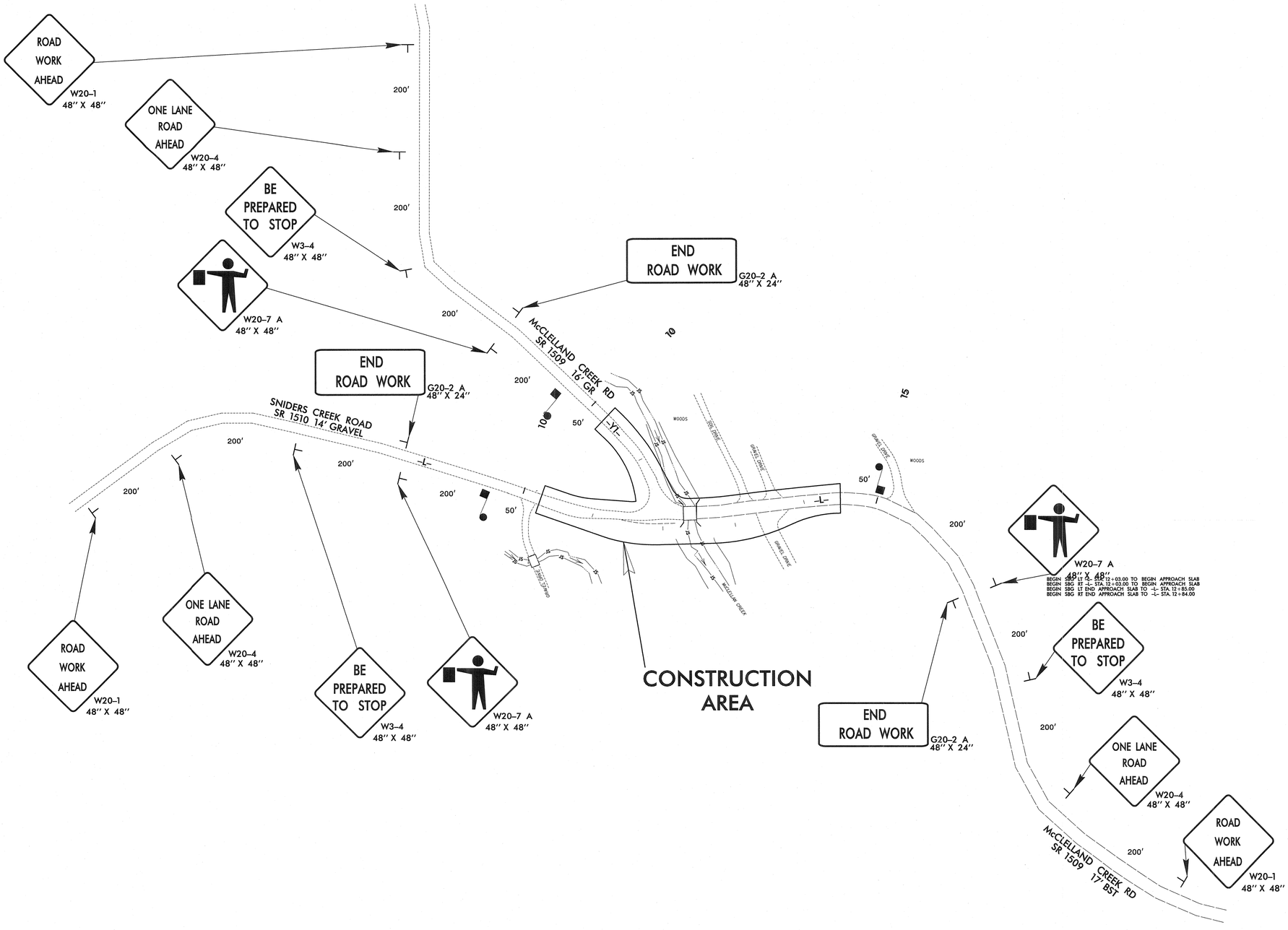

APPROVED: J. Talley DATE: 3-20-2014

SEAL

NORTH CAROLINA PROFESSIONAL SEAL 029473 ENGINEER JASON M. TALLEY

RS&H

IMPROVING YOUR WORLD

RS&H Architects-Engineers-Planners, Inc.

DETAIL FOR WORK ZONE SIGNING

2/15/2014
X:\P\Bridge 19018A\Project Production\Traffic\Traffic Control\19018A_TC_TMP_6.dgn
User:Talley,J

PROJ. REFERENCE NO.	SHEET NO.
17BP.14.R.59	PMP-1

APPROVED: J. Talley DATE: 3-20-2014

NORTH CAROLINA PROFESSIONAL SEAL 029473 ENGINEER JASON M. TALLEY

RS&H
IMPROVING YOUR WORLD
RS&H Architects-Engineers-Planners, Inc.

STATE OF NORTH CAROLINA
DIVISION OF HIGHWAYS

CHEROKEE COUNTY

LOCATION: REPLACE BRIDGE No. 184 ON SR 1509 OVER MCCLELLAN CREEK

ROADWAY STANDARD DRAWINGS

THE FOLLOWING ROADWAY STANDARDS AS SHOWN IN "ROADWAY STANDARD DRAWINGS" - PROJECT SERVICES UNIT - N.C. DEPARTMENT OF TRANSPORTATION - RALEIGH, N.C., DATED JANAUARY 2012 ARE APPLICABLE TO THIS PROJECT AND BY REFERENCE HEREBY ARE CONSIDERED A PART OF THESE PLANS:

STD. NO.	TITLE
1205.01	PAVEMENT MARKINGS - LINE TYPES AND OFFSETS
1205.02	PAVEMENT MARKINGS - 2 LANE AND MULTILANE ROADWAYS
1205.12	PAVEMENT MARKINGS - BRIDGES
1250.01	PAVEMENT MARKER SPACING
1251.01	RAISED PAVEMENT MARKERS
1261.01	GUARDRAIL AND BARRIER DELINEATOR SPACING
1261.02	GUARDRAIL AND BARRIER DELINEATOR TYPES
1262.01	GUARDRAIL END DELINEATION

GENERAL NOTES

THE FOLLOWING GENERAL NOTES APPLY AT ALL TIMES FOR THE DURATION OF THE CONSTRUCTION PROJECT EXCEPT WHEN OTHERWISE NOTED IN THE PLAN OR AS DIRECTED BYTHE ENGINEER.

A) INSTALL PAVEMENT MARKINGS ON THE FINAL SURFACE AS FOLLOWS:

ROAD NAME	MARKING	MARKER
SR 1509	PAINT	N/A
SR 1510	PAINT	N/A

PLACE TWO (2) APPLICATIONS OF PAINT PAVEMENT MARKINGS ON THE FINAL WEARING SURFACE. PLACE THE SECOND APPLICATION OF PAINT UPON SUFFICIENT DRYING TIME OF FIRST.

B) TIE PROPOSED PAVEMENT MARKING LINES TO EXISTING PAVEMENT MARKING LINES

C) REMOVE/REPLACE ANY CONFLICTING/DAMAGED PAVEMENT MARKINGS AND MARKERS.

D) PASSING ZONE WILL BE DETERMINED IN THE FIELD AND MUST BE APPROVED BY THE ENGINEER.

E) REMOVE ALL RESIDUE AND SURFACE LAITANCE BY ACCEPTABLE METHODS ON THE BRIDGE DECK PRIOR TO PLACING PAINT PAVEMENT MARKING.

PAVEMENT MARKING SCHEDULE
TIP PROJECT 17BP.14.R.59

FINAL
PAVEMENT MARKINGS

PA	WHITE EDGELINE	PAINT (4")
PI	YELLOW DOUBLE CENTER	PAINT (4")
STOP BAR		PAINT (24")

PLAN PREPARED BY: RS&H ARCHITECT-ENGINEERS-PLANNERS, INC.

KENNETH HERRING, PE	PROJECT ENGINEER
JASON TALLEY, PE	PROJECT DESIGN ENGINEER

INDEX

SHEET NO.	DESCRIPTION
PMP-1	PAVEMENT MARKING & SIGNING PLAN TITLE SHEET SIGNING & PAVEMENT MARKING SCHEDULE
PMP-2	PAVEMENT MARKING DETAIL

PROJECT: 17BP.14.R.59

CONTRACT: DN00184

09/08/99
2/15/2014
X:\P\Bridge 190184\Project Production\Traffic\Traffic Control\190184_TC_PMP.dgn
4:10:20 PM

PROJ. REFERENCE NO.	SHEET NO.
17BP.14.R.59	PMP-2
APPROVED:	DATE: 3-10-2014

NORTH CAROLINA PROFESSIONAL SEAL 029473 ENGINEER JASON M. TALLEY

RS&H
IMPROVING YOUR WORLD
RS&H Architects-Engineers-Planners, Inc.

SYMBOL AND PAVEMENT MARKING LEGEND

PA	WHITE EDGE LINE (4")
PI	YELLOW DOUBLE CENTER (4")
	STOP BAR (24")

10

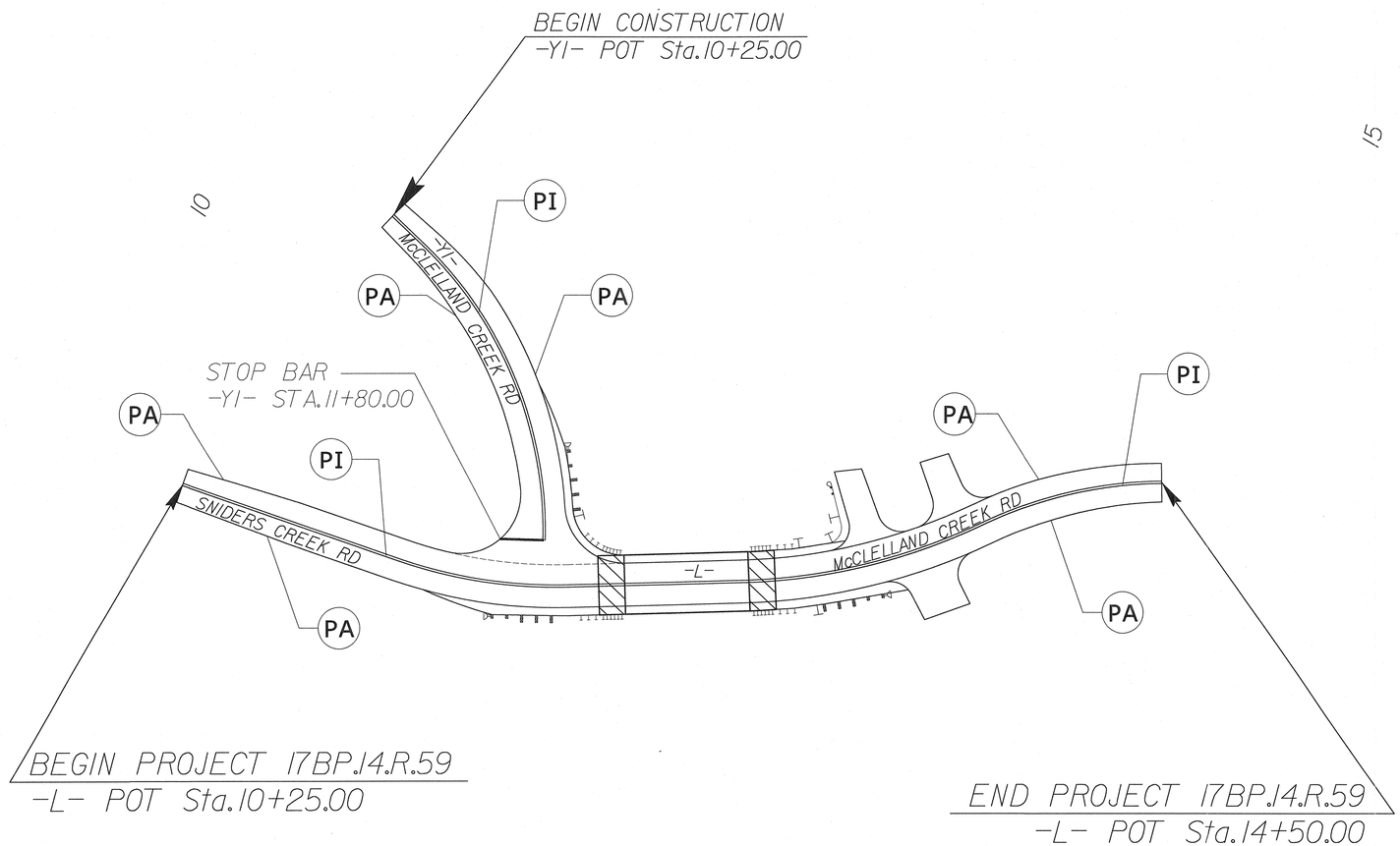

10

15

REFER TO RSD NO. 1205.01, 1205.12, 1250.01 AND 1251.01 FOR PLACEMENT OF FINAL PAVEMENT AND MARKERS UNLESS NOTED OTHERWISE.

PAVEMENT MARKING DETAIL

2/19/2014
X:\P\Bridge 190184\Project Production\Traffic\Traffic Control\190184_TC_PMP.dgn
8:01:15 PM

PROJECT: 17BP.14.R.59

STATE	STATE PROJECT REFERENCE NO.	SHEET NO.	TOTAL SHEETS
N.C.	17BP.14.R.59	EC-1	

STATE PROJ. NO.	F. A. PROJ. NO.	DESCRIPTION
17BP.14.R.59	N/A	PE
17BP.14.R.59	N/A	ROW, UTL
17BP.14.R.59	N/A	CONST.

STATE OF NORTH CAROLINA
DIVISION OF HIGHWAYS

PLAN FOR PROPOSED
HIGHWAY EROSION CONTROL

CHEROKEE COUNTY

LOCATION: REPLACE BRIDGE NO. 184 ON SR 1509 OVER MCCLELLAN CREEK

TYPE OF WORK: GRADING, DRAINAGE, PAVING AND STRUCTURE

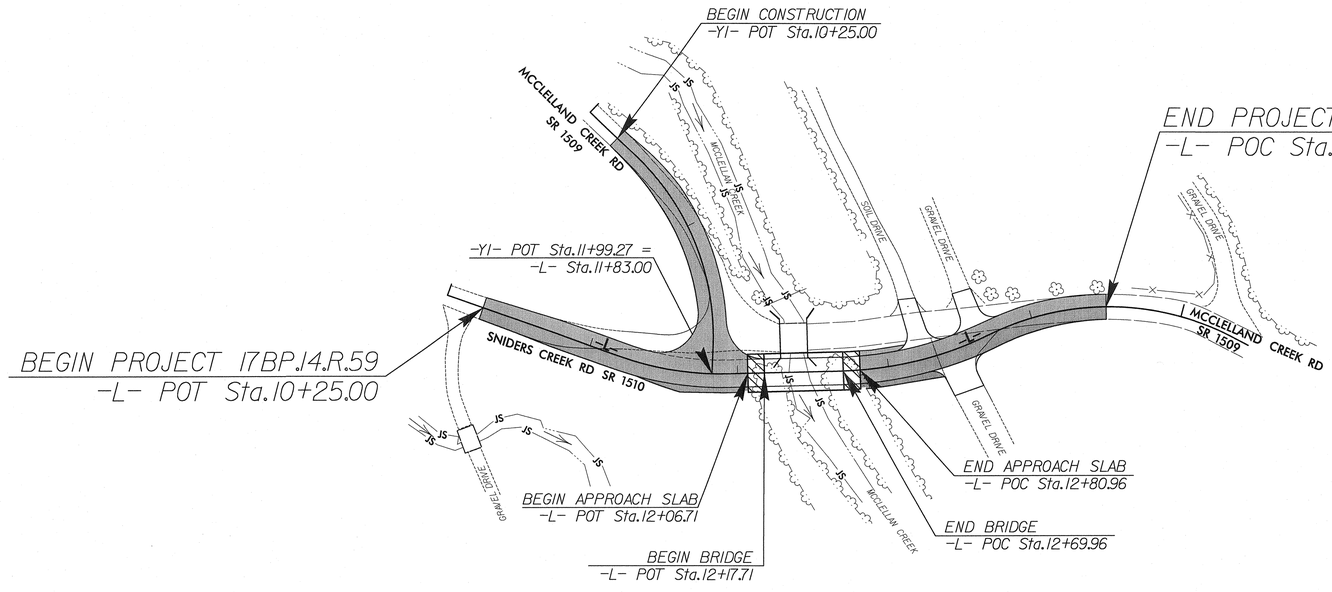

EROSION AND SEDIMENT CONTROL MEASURES

Std. #	Description	Symbol
1630.03	Temporary Silt Ditch	TSD
1630.05	Temporary Diversion	TD
1605.01	Temporary Silt Fence	
1606.01	Special Sediment Control Fence	
1622.01	Temporary Berms and Slope Drains	
1630.02	Silt Basin Type B	
1633.01	Temporary Rock Silt Check Type-A	
	Temporary Rock Silt Check Type-A with Matting and Polyacrylamide (PAM)	
1633.02	Temporary Rock Silt Check Type-B	
	Wattle / Coir Fiber Wattle	EW CFW
	Wattle / Coir Fiber Wattle with Polyacrylamide (PAM)	
1634.01	Temporary Rock Sediment Dam Type-A	
1634.02	Temporary Rock Sediment Dam Type-B	
1635.01	Rock Pipe Inlet Sediment Trap Type-A	
1635.02	Rock Pipe Inlet Sediment Trap Type-B	
1630.04	Stilling Basin	
1630.06	Special Stilling Basin	
	Rock Inlet Sediment Trap:	
1632.01	Type A	A
1632.02	Type B	B
1632.03	Type C	C
	Skimmer Basin	
	Tiered Skimmer Basin	
	Infiltration Basin	

THIS PROJECT CONTAINS EROSION CONTROL PLANS FOR CLEARING AND GRUBBING PHASE OF CONSTRUCTION.

GRAPHIC SCALE

25 0 50

PLANS

ROADSIDE ENVIRONMENTAL UNIT
DIVISION OF HIGHWAYS
STATE OF NORTH CAROLINA

THESE EROSION AND SEDIMENT CONTROL PLANS COMPLY WITH THE REGULATIONS SET FORTH BY THE NCG-010000 GENERAL CONSTRUCTION PERMIT EFFECTIVE AUGUST 3, 2011 ISSUED BY THE NORTH CAROLINA DEPARTMENT OF ENVIRONMENT AND NATURAL RESOURCES DIVISION OF WATER QUALITY.

Prepared In the Office of:

RS&H

ARCHITECTS-ENGINEERS-PLANNERS, INC.

1520 SOUTH BLVD, SUITE 200
CHARLOTTE, NC 28203

WILL WEATHERSBEE
LEVEL IIIA NAME

3161
LEVEL IIIA CERTIFICATION NO.

2012 STANDARD SPECIFICATIONS

Roadway Standard Drawings

The following roadway english standards as appear in "Roadway Standard Drawings"- Roadway Design Unit - N. C. Department of Transportation - Raleigh, N. C., dated January 2012 and the latest revison thereto are applicable to this project and by reference hereby are considered a part of these plans.

1604.01	Railroad Erosion Control Detail	1632.01	Rock Inlet Sediment Trap Type A
1605.01	Temporary Silt Fence	1632.02	Rock Inlet Sediment Trap Type B
1606.01	Special Sediment Control Fence	1632.03	Rock Inlet Sediment Trap Type C
1607.01	Gravel Construction Entrance	1633.01	Temporary Rock Silt Check Type A
1622.01	Temporary Berms and Slope Drains	1633.02	Temporary Rock Silt Check Type B
1630.01	Riser Basin	1634.01	Temporary Rock Sediment Dam Type A
1630.02	Silt Basin Type B	1634.02	Temporary Rock Sediment Dam Type B
1630.03	Temporary Silt Ditch	1635.01	Rock Pipe Inlet Sediment Trap Type A
1630.04	Stilling Basin	1635.02	Rock Pipe Inlet Sediment Trap Type B
1630.05	Temporary Diversion	1640.01	Coir Fiber Baffle
1630.06	Special Stilling Basin	1645.01	Temporary Stream Crossing
1631.01	Matting Installation		

2/15/2014
\\Rsh\Production\Environmental\B190184_EC_TSH.dgn

PROJECT REFERENCE NO.	SHEET NO.
17BP.14.R.59	EC-2

TEMPORARY ROCK SILT CHECK TYPE 'A' WITH EXCELSIOR MATTING AND POLYACRYLAMIDE (PAM)

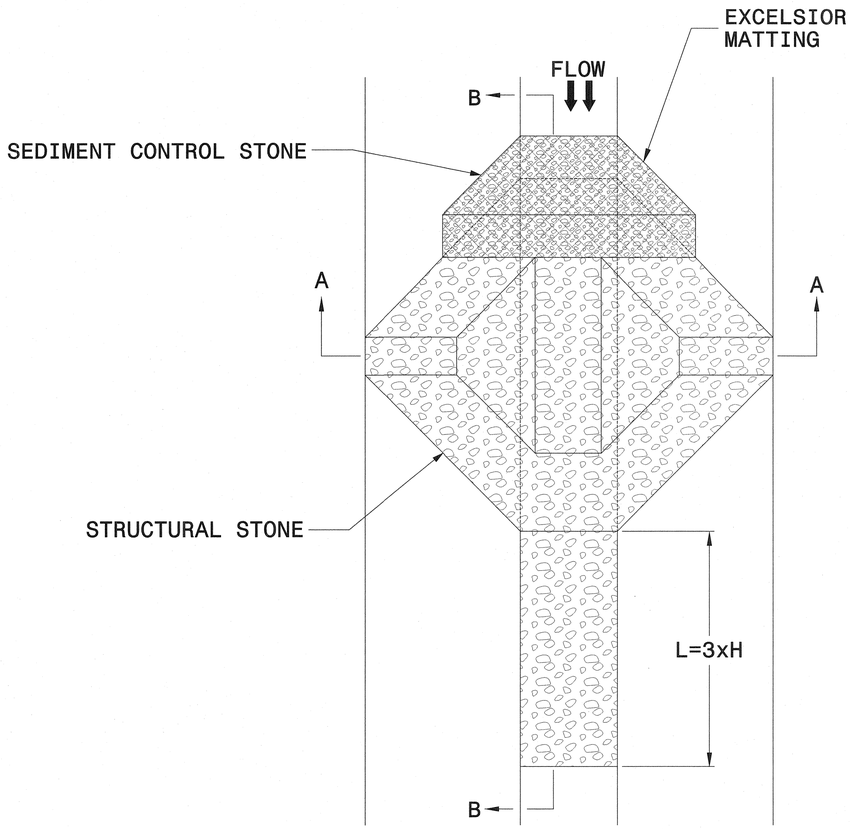

PLAN

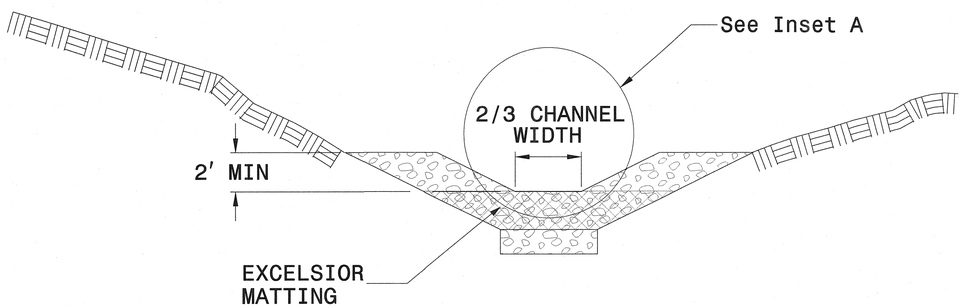

SECTION A-A

NOTES

USE EXCELSIOR FOR MATTING MATERIAL AND ANCHOR MATTING SECTION AT TOP AND BOTTOM WITH CLASS B STONE.

PRIOR TO POLYACRYLAMIDE (PAM) APPLICATION, OBTAIN A SOIL SAMPLE FROM PROJECT LOCATION, AND FROM OFFSITE MATERIAL, AND ANALYZE FOR APPROPRIATE PAM FLOCCULANT TO BE APPLIED TO EACH ROCK SILT CHECK.

INITIALLY APPLY 3.5 OUNCES OF POLYACRYLAMIDE (PAM) TO TOP OF MATTING SECTION AND AFTER EVERY RAINFALL EVENT THAT EQUALS OR EXCEEDS 0.50 INCHES.

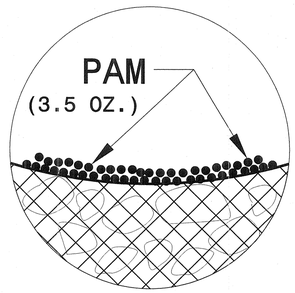

INSET A

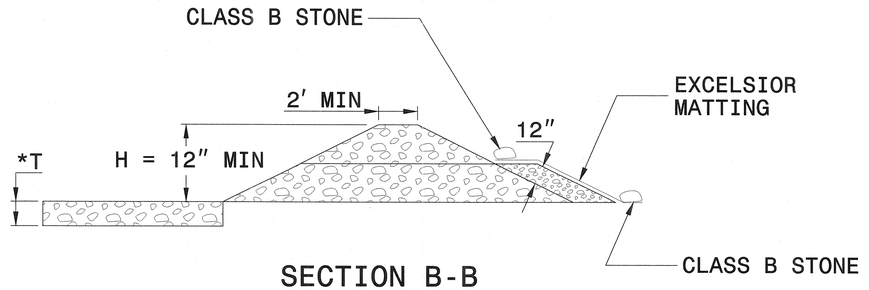

SECTION B-B

*T = 12" MIN., 18" MAX.

NOT TO SCALE

PROJECT REFERENCE NO.	SHEET NO.
17BP.14.R.59	EC-3

DIVISION OF HIGHWAYS
STATE OF NORTH CAROLINA

SOIL STABILIZATION TIMEFRAMES

SITE DESCRIPTION	STABILIZATION TIME	TIMEFRAME EXCEPTIONS
PERIMETER DIKES, SWALES, DITCHES AND SLOPES	7 DAYS	NONE
HIGH QUALITY WATER (HQW) ZONES	7 DAYS	NONE
SLOPES STEEPER THAN 3:1	7 DAYS	IF SLOPES ARE 10' OR LESS IN LENGTH AND ARE NOT STEEPER THAN 2:1, 14 DAYS ARE ALLOWED.
SLOPES 3:1 OR FLATTER	14 DAYS	7 DAYS FOR SLOPES GREATER THAN 50' IN LENGTH.
ALL OTHER AREAS WITH SLOPES FLATTER THAN 4:1	14 DAYS	NONE, EXCEPT FOR PERIMETERS AND HQW ZONES.

EROSION CONTROL PLAN

PROJECT REFERENCE NO.	SHEET NO.
17BP.14.R.59	EC-4/CONST.4

Environmentally Sensitive Areas:

This project is located in an "Environmentally Sensitive Area." This designation requires special procedures to be used for clearing and grubbing, temporary stream crossings, and grading operations within the area identified on the plans. This also requires special procedures to be used for seeding and mulching and staged seeding within the project.

Clearing and Grubbing:

In areas identified on the erosion control plans as "Environmentally Sensitive Areas", the Contractor may perform clearing operations, but not grubbing operations until immediately prior to beginning grading operations as described in Section 200, Article 200-1, in the Standard Specifications. The "Environmentally Sensitive Area" shall be defined as a 50 foot buffer zone on both sides of the stream (or depression), measured from top of streambank, (or center of depression). Only clearing operations (not grubbing) shall be allowed in this buffer zone until immediately prior to beginning grading operations. Erosion control devices shall be installed immediately following the clearing operation.

Grading:

Once grading operations begin in identified "Environmentally Sensitive Areas", work will progress in a continuous manner until complete. All construction within these areas must progress in a continuous manner such that each phase is complete and areas permanently stabilized prior to beginning of next phase. Failure on the part of the Contractor to complete any phase of construction in a continuous manner in "Environmentally Sensitive Areas" as specified will be just cause for the Engineer to direct the suspension of work in accordance with Section 108-7 of the Standard Specifications.

Temporary Stream Crossings:

Any crossing of streams within the limits of this project must be accomplished in accordance with Section 107-13(b) of the Standard Specifications.

Seeding and Mulching:

Seeding and mulching shall be performed in accordance with Section 1660 of the Standard Specifications and vegetative cover sufficient to restrain erosion shall be installed immediately following grade establishment.

Seeding and mulching shall be performed on the areas disturbed by construction immediately following final grade establishment. No appreciable time shall lapse into the contract time without stabilization of slopes, ditches and other areas within the "Environmentally Sensitive Areas" as indicated on the erosion control plans.

Stage Seeding:

The work covered by this section shall consist of the establishment of a vegetative cover on cut and fill slopes as grading progresses. Seeding and mulching shall be done in stages on cut and fill slopes which are greater than 20 feet in height measured along the slope, or greater than 2 acres in area. Each stage shall not exceed the limits stated above.

All work described above will be paid for at the contract price for "Lump Sum for Erosion Control" established in the contract for the work involved. Additional payments will not be made for the requirements of this section as the cost for this work should be included in the contract price for "Lump Sum for Erosion Control" for the work involved.

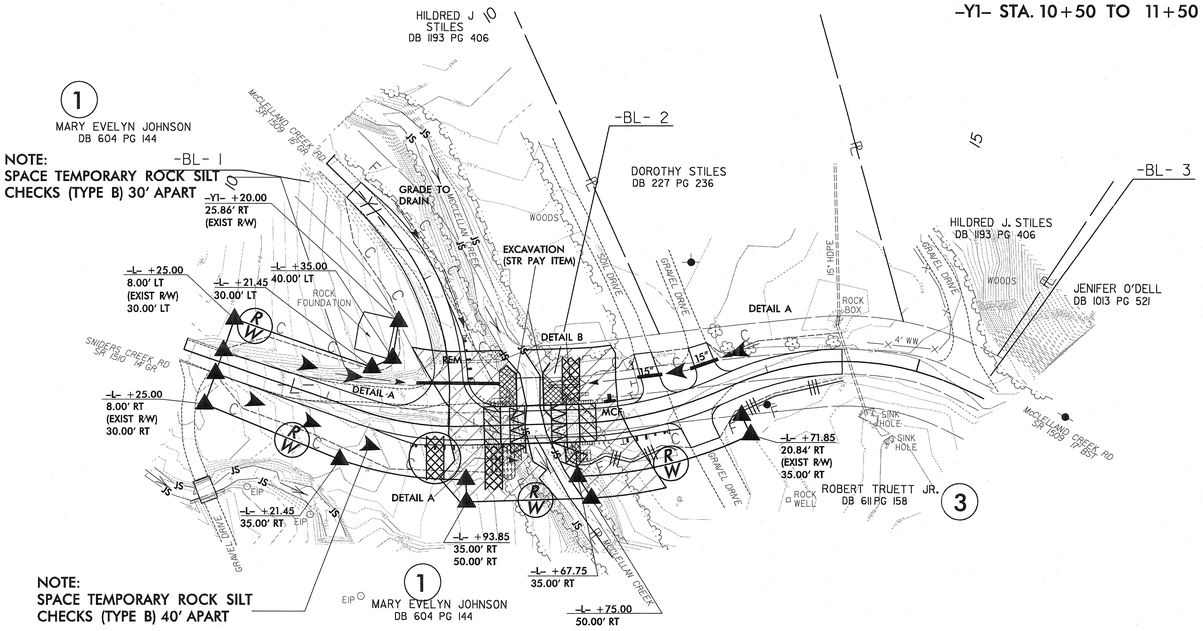

NOTE:
SPACE TEMPORARY ROCK SILT CHECKS (TYPE B) 40' APART

NOTE:
SPACE TEMPORARY ROCK SILT CHECKS (TYPE B) 40' APART

INSTALL PSRM IN THE PROPOSED DITCH LINE.

-L- STA. 10+50 TO 12+00

INSTALL MATTING FOR EROSION CONTROL IN THE PROPOSED DITCH LINE.

-Y1- STA. 10+50 TO 11+50 LT.

DETAIL A
SPECIAL CUT DITCH
(Not to Scale)

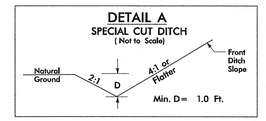

FROM -L- STA. 11+00.00 TO -L- STA. 11+50.00 LT.
FROM -L- STA. 12+00.00 TO -L- STA. 12+32.00 RT.
FROM -L- STA 12+70.00 TO -L- STA. 14+00.00 LT.

DETAIL B
LATERAL 'V' DITCH
(Not to Scale)

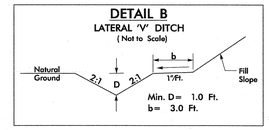

FROM -L- STA. 12+50.00 TO -L- STA. 12+70.00 LT.

BEGIN SSBC LT -L- STA. 12+03.00 TO BEGIN APPROACH SLAB
BEGIN SSBC RT -L- STA. 12+03.00 TO BEGIN APPROACH SLAB
BEGIN SSBC LT END APPROACH SLAB TO -L- STA. 12+89.00
BEGIN SSBC RT END APPROACH SLAB TO -L- STA. 12+84.00

CLEARING AND GRUBBING EROSION CONTROL FOR CONSTRUCTION SHEET 4

ENVIRONMENTALLY SENSITIVE AREA
SEE PROJECT SPECIAL PROVISIONS

NOTES: ANY DEVIATION FROM OPTIONS GIVEN WILL REQUIRE PRIOR APPROVAL BY ENGINEER.

ADDITIONAL EROSION CONTROL DEVICES MAY NEED TO BE INSTALLED AS DIRECTED BY THE ENGINEER.

PROJECT REFERENCE NO.	SHEET NO.
17BPJ4R59	EC-5/CONST.4

EROSION CONTROL PLAN

Environmentally Sensitive Areas:

This project is located in an "Environmentally Sensitive Area." This designation requires special procedures to be used for clearing and grubbing, temporary stream crossings, and grading operations within the area identified on the plans. This also requires special procedures to be used for seeding and mulching and staged seeding within the project.

Clearing and Grubbing:

In areas identified on the erosion control plans as "Environmentally Sensitive Areas", the Contractor may perform clearing operations, but not grubbing operations until immediately prior to beginning grading operations as described in Section 200, Article 200–1, in the Standard Specifications. The "Environmentally Sensitive Area" shall be defined as a 50 foot buffer zone on both sides of the stream (or depression), measured from top of streambank, (or center of depression). Only clearing operations (not grubbing) shall be allowed in this buffer zone until immediately prior to beginning grading operations. Erosion control devices shall be installed immediately following the clearing operation.

Grading:

Once grading operations begin in identified "Environmentally Sensitive Areas", work will progress in a continuous manner until complete. All construction within these areas must progress in a continuous manner such that each phase is complete and areas permanently stabilized prior to beginning of next phase. Failure on the part of the Contractor to complete any phase of construction in a continuous manner in "Environmentally Sensitive Areas" as specified will be just cause for the Engineer to direct the suspension of work in accordance with Section 108–7 of the Standard Specifications.

Temporary Stream Crossings:

Any crossing of streams within the limits of this project must be accomplished in accordance with Section 107–13(b) of the Standard Specifications.

Seeding and Mulching:

Seeding and mulching shall be performed in accordance with Section 1660 of the Standard Specifications and vegetative cover sufficient to restrain erosion shall be installed immediately following grade establishment.

Seeding and mulching shall be performed on the areas disturbed by construction immediately following final grade establishment. No appreciable time shall lapse into the contract time without stabilization of slopes, ditches and other areas within the "Environmentally Sensitive Areas" as indicated on the erosion control plans.

Stage Seeding:

The work covered by this section shall consist of the establishment of a vegetative cover on cut and fill slopes as grading progresses. Seeding and mulching shall be done in stages on cut and fill slopes which are greater than 20 feet in height measured along the slope, or greater than 2 acres in area. Each stage shall not exceed the limits stated above.

All work described above will be paid for at the contract price for "Lump Sum for Erosion Control " established in the contract for the work involved. Additional payments will not be made for the requirements of this section as the cost for this work should be included in the contract price for "Lump Sum for Erosion Control" for the work involved.

INSTALL PSRM IN THE PROPOSED DITCH LINE.

–L– STA. 10+50 TO 12+00

INSTALL MATTING FOR EROSION CONTROL IN THE PROPOSED DITCH LINE.

–Y1– STA. 10+50 TO 11+50 LT.

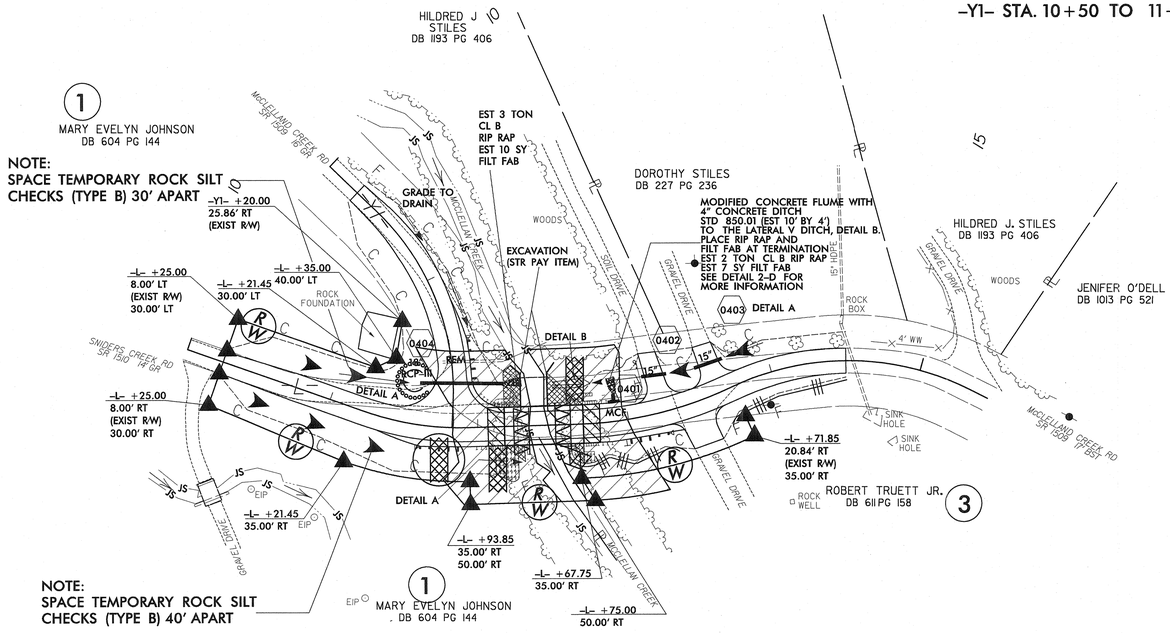

DETAIL A
SPECIAL CUT DITCH
(Not to Scale)

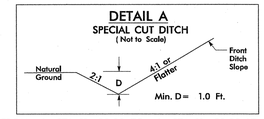

FROM –L– STA. 11+00.00 TO –L– STA. 11+50.00 LT.
FROM –L– STA. 12+00.00 TO –L– STA. 12+32.00 RT.
FROM –L– STA 12+70.00 TO –L– STA. 14+00.00 LT.

DETAIL B
LATERAL 'V' DITCH
(Not to Scale)

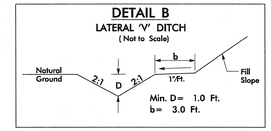

FROM –L– STA. 12+50.00 TO –L– STA. 12+70.00 LT.

BEGIN SSBC LT –L– STA. 12+03.00 TO BEGIN APPROACH SLAB
BEGIN SSBC RT –L– STA. 12+03.00 TO BEGIN APPROACH SLAB
BEGIN SSBC LT END APPROACH SLAB TO –L– STA. 12+89.00
BEGIN SSBC RT END APPROACH SLAB TO –L– STA. 12+84.00

ENVIRONMENTALLY SENSITIVE AREA
SEE PROJECT SPECIAL PROVISIONS

NOTES: ANY DEVIATION FROM OPTIONS GIVEN WILL REQUIRE PRIOR APPROVAL BY ENGINEER.

ADDITIONAL EROSION CONTROL DEVICES MAY NEED TO BE INSTALLED AS DIRECTED BY THE ENGINEER.

5/14/99

PROJECT REFERENCE NO.	SHEET NO.
17BP.14.R.59	U0-1

UTILITIES BY OTHERS PLANS

LOCATION: REPLACE BRIDGE No. 184 ON SR 1509 OVER McCLELLAN CREEK
TYPE OF WORK: GRADING, PAVING, DRAINAGE AND STRUCTURE

NOTE:
ALL PROPOSED UTILITY WORK SHOWN ON THIS SHEET WILL BE DONE BY OTHERS

NOTE:
FOR INFORMATION ONLY

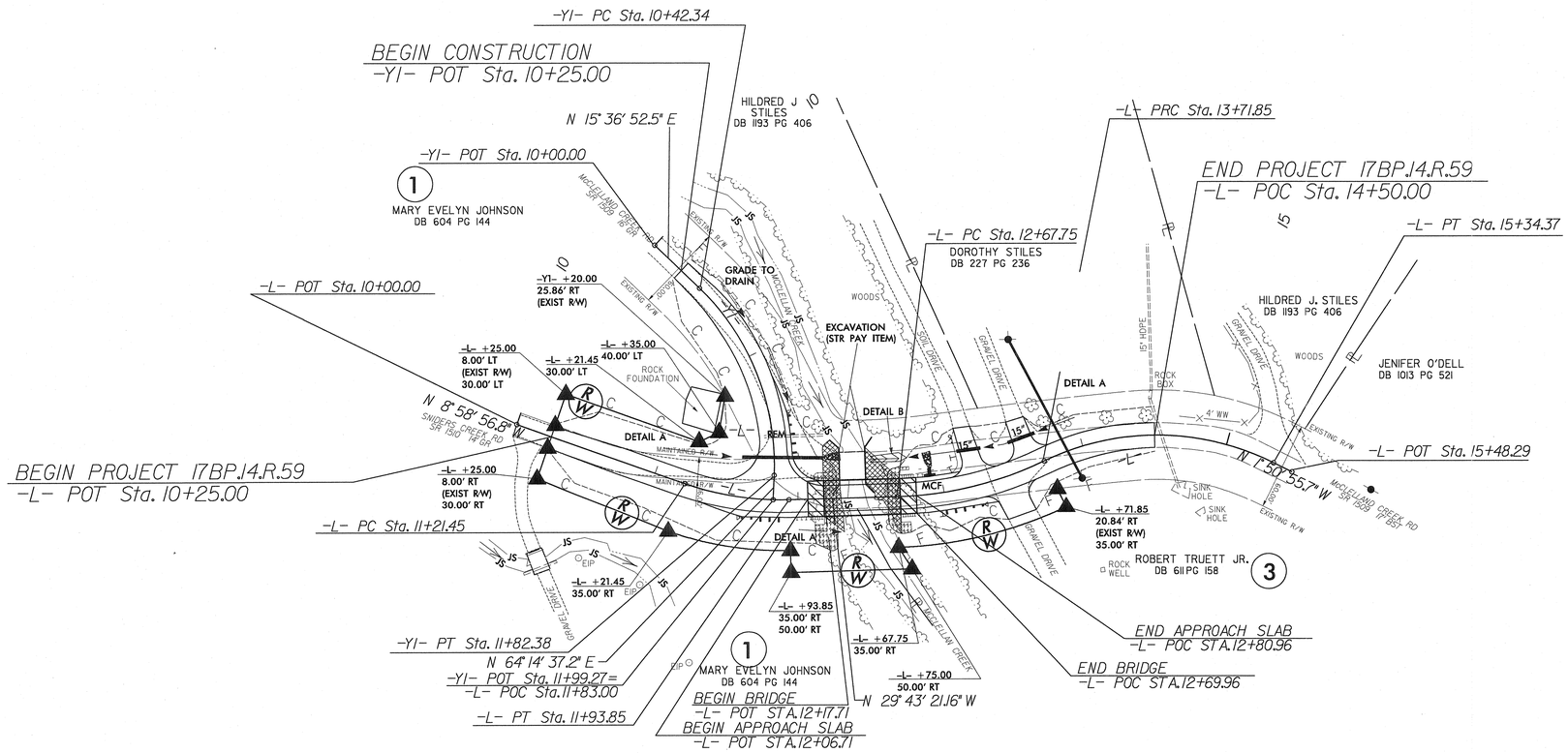

DETAIL A
SPECIAL CUT DITCH
(Not to Scale)

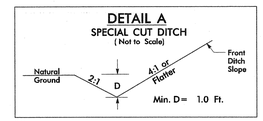

FROM -L- STA. 11+00.00 TO -L- STA. 11+50.00 LT.
FROM -L- STA. 12+00.00 TO -L- STA. 12+32.00 RT.
FROM -L- STA 12+70.00 TO -L- STA. 14+00.00 LT.

DETAIL B
LATERAL 'V' DITCH
(Not to Scale)

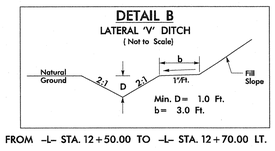

FROM -L- STA. 12+50.00 TO -L- STA. 12+70.00 LT.

FRONTIER COMMUNICATIONS HAS NO ANTICIPATED UTILITY CONFLICTS. HOWEVER THERE IS AN EXISTING AERIAL DROP THAT MAY BE TEMPORARILY DROPPED DURING BRIDGE WORK IF DEEMED NECESSARY BY RESIDENT ENGINEER. WORK WILL BE COMPLETED BY FRONTIER IF NEEDED.

-L- CURVE DATA

PI Sta 11+58.05	PI Sta 13+20.56	PI Sta 14+59.12
Δ = 20° 44' 24.4" (LT)	Δ = 23° 51' 31.9" (LT)	Δ = 51° 43' 57.4" (RT)
D = 28° 38' 52.4"	D = 22° 55' 05.9"	D = 31° 49' 51.6"
L = 72.40'	L = 104.10'	L = 162.52'
T = 36.60'	T = 52.82'	T = 87.27'
R = 200.00'	R = 250.00'	R = 180.00'
RO = SEE PLANS	RO = SEE PLANS	RO = SEE PLANS

-Y1- CURVE DATA

PI Sta 11+16.89
Δ = 48° 37' 44.8" (RT)
D = 34° 43' 29.0"
L = 140.04'
T = 74.55'
R = 165.00'
RO = SEE PLANS

GRAPHIC SCALES

50 25 0 50 100

UTILITY OWNERS ON PROJECT

(1) FRONTIER COMMUNICATIONS
(2) DUKE ENERGY CORPORATION (NO CONFLICT WITH PROJECT

NOTE:
FOR ROADWAY AND DRAINAGE INFORMATION, SEE SHEET 4.
FOR LOCATION AND SURVEY DATA SEE SHEET 1-C.

PREPARED IN THE OFFICE OF:
RS&H
ARCHITECTS-ENGINEERS-PLANNERS, INC.
1520 SOUTH BLVD, SUITE 200
CHARLOTTE, NC 28203
PHONE (704) 752-0610

Kenneth Herring, PE — *UTILITIES ENGINEER*
Jason Talley, P.E. — *UTILITIES COORDINATION ENGINEER*

3/20/2014
3:22:14 PM
...\Project Production\Utilities\Rdy_Ut\Proj_\B190184_Ut_U0put.dgn

PROJ. REFERENCE NO.	SHEET NO.
17BP.14.R.59	X-0

STATE OF NORTH CAROLINA
DIVISION OF HIGHWAYS

CROSS-SECTION SUMMARY

Approximate quantities only. Unclassified excavation, fine grading, clearing and grubbing, and removal of existing pavement will be paid for at the lump sum price for "Grading".

NOTE: EMBANKMENT COLUMN DOES NOT INCLUDES BACKFILL FOR UNDERCUT

Station L	Uncl. Exc. (cu. yd.)	Embt (cu. yd.)
10+25.00	0	0
10+50.00	32	1
11+00.00	119	5
11+50.00	226	4
12+00.00	224	0
12+17.71	39	0
12+69.96	0	0
13+00.00	44	2
13+50.00	54	11
14+00.00	25	12
14+50.00	8	2
Y1		
10+25.00	0	0
10+50.00	13	1
11+00.00	76	2
11+50.00	118	0
11+90.26	62	0

INDEX OF SHEETS

-L-	X-1 THRU X-3
-Y1-	X-4

PROJ. REFERENCE NO.	SHEET NO.
17BP.14.R.59	X-1

0 2.5 5

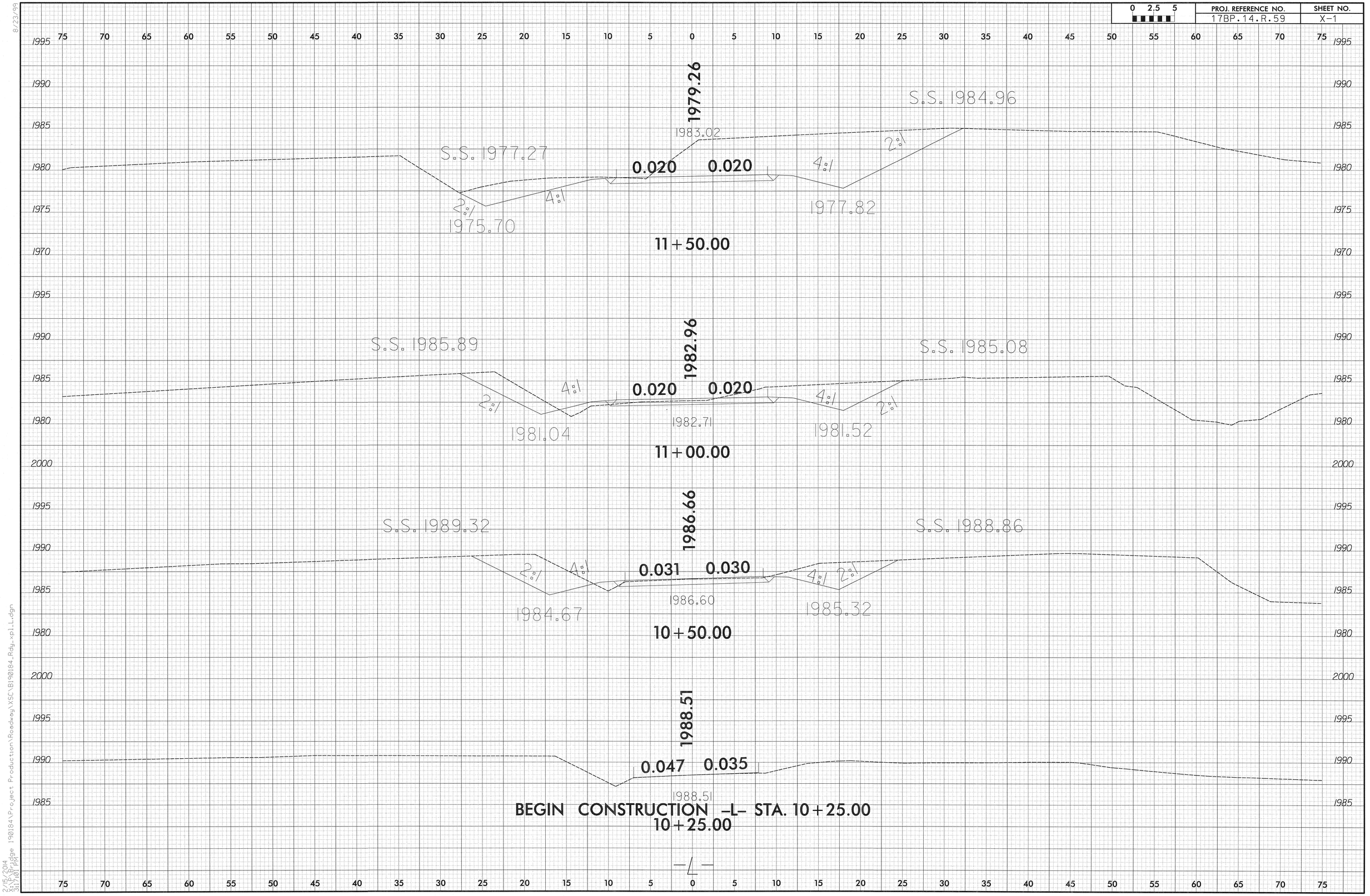

8/23/99

2/15/2014
X:\Bridge 190184\Project Production\Roadway\XSC\B190184_Rdy_xpl_L.dgn
3:17:01 PM

8/23/99

0 2.5 5	PROJ. REFERENCE NO.	SHEET NO.
	17BP.14.R.59	X-2

75 70 65 60 55 50 45 40 35 30 25 20 15 10 5 0 5 10 15 20 25 30 35 40 45 50 55 60 65 70 75

1990 1985 1980 1975 1970 1965 2000 1995 1990 1985 1980 1975 1970

S.S. 1975.71

1976.27

B

0.020 0.020

E

S.S. 1974.99

4:1

1972.90

1976.00

10:1

13+00.00

1976.48

0.020 0.020

1969.00

1969.19

12+50.00

INTERSECTION WITH
–Y1– STA. 11+89.41
ELEVATION 1976.52

1976.70

S.S. 1979.69

0.020 0.020

4:1 2:1

977.82

1975.14

12+00.00

–℄–

75 70 65 60 55 50 45 40 35 30 25 20 15 10 5 0 5 10 15 20 25 30 35 40 45 50 55 60 65 70 75

2/15/2014
3:17:04 PM
X:\P_Bridge 190184\Project Production\Roadway\XSC\B190184_Rdy_xpl_L.dgn

8/23/99

0 2.5 5	PROJ. REFERENCE NO.	SHEET NO.
	17BP.14.R.59	X-3

75 70 65 60 55 50 45 40 35 30 25 20 15 10 5 0 5 10 15 20 25 30 35 40 45 50 55 60 65 70 75

1985 1980 1975 1990

END CONSTRUCTION –L– STA. 14+50.00

1974.86

0.039 0.052

1974.61

14+50.00

1985 1980 1975 1970 1990

1975.20

S.S. 1974.23 0.022 0.022 S.S. 1974.07

1973.30 974.86

14+00.00

1990 1985 1980 1975 1970

1975.77

S.S. 1975.60 0.017 0.017 4:1

2:1 4:1

1973.10 974.92 1974.30

13+50.00

1965

—L—

75 70 65 60 55 50 45 40 35 30 25 20 15 10 5 0 5 10 15 20 25 30 35 40 45 50 55 60 65 70 75

2/5/2014
3:17:07 PM
X:\PW\Bridge 190184\Project Production\Roadway\XSC\B190184_Rdy_xpl_L.dgn

8/23/99

0 2.5 5	PROJ. REFERENCE NO.	SHEET NO.
	17BP.14.R.59	X-4

END CONSTRUCTION –Y1– STA. 11+90.26

1976.59

0.009 0.009

4:1 2:1

976.42

S.S. 1982.12

1975.50

11+50.00

1978.90

0.029 0.029

2:1 4:1 2:1

1979.024

978.74

S.S. 1981.78

1977.39

11+00.00

1981.44

0.041 0.041

2:1 4:1 2:1

1981.67

1981.43

S.S. 1983.26

1979.86

10+50.00

1982.69

0.055 0.055

982.69

BEGIN CONSTRUCTION –Y1– STA. 10+25.00

10+25.00

–Y1–

2/15/2014 3:17:11 PM
X:\P_Bridge 190184\Project Production\Roadway\XSC\B190184_Rdy_xpl_Y1.dgn

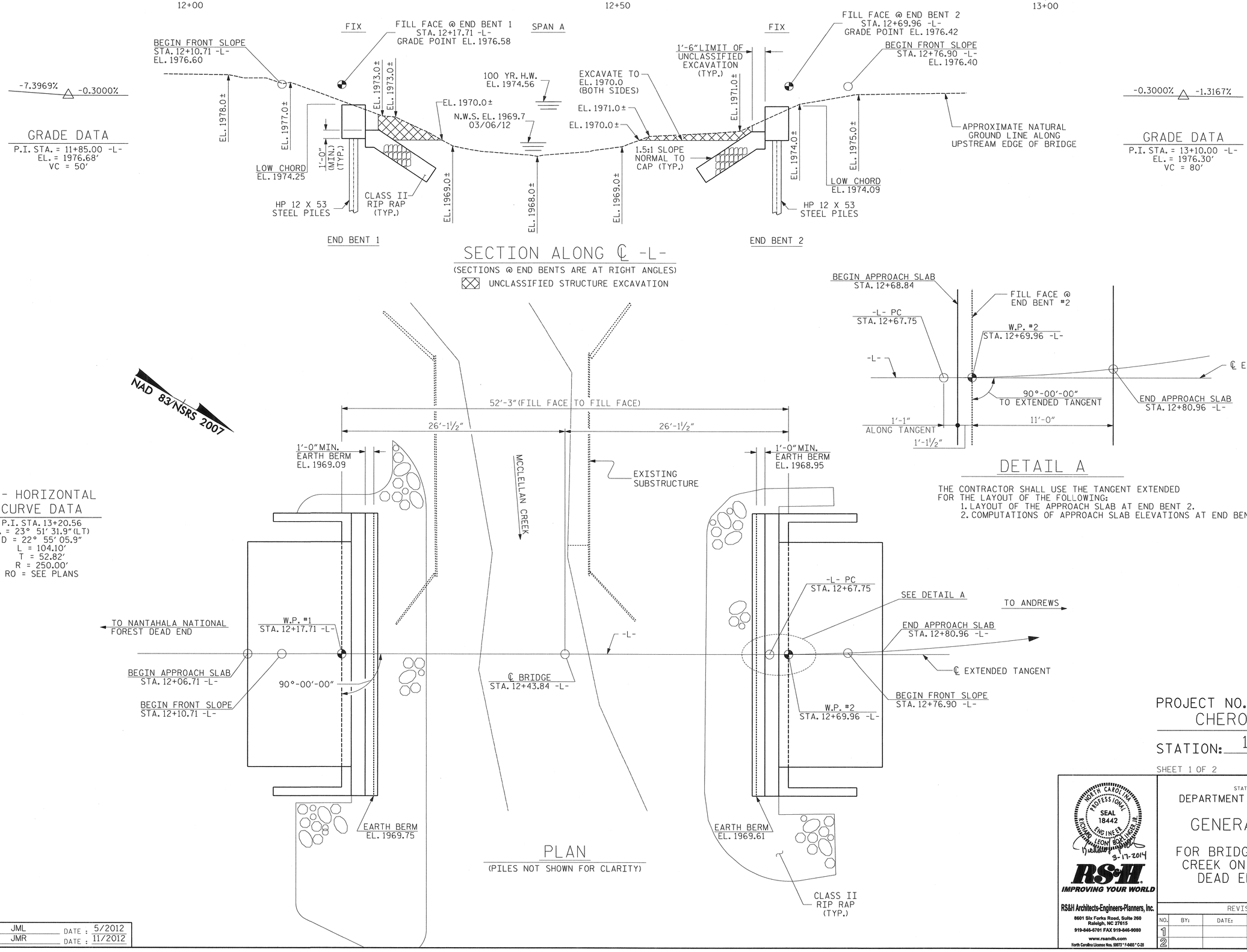

SECTION ALONG ℄ -L-

(SECTIONS @ END BENTS ARE AT RIGHT ANGLES)

UNCLASSIFIED STRUCTURE EXCAVATION

NAD 83/NSRS 2007

PLAN

(PILES NOT SHOWN FOR CLARITY)

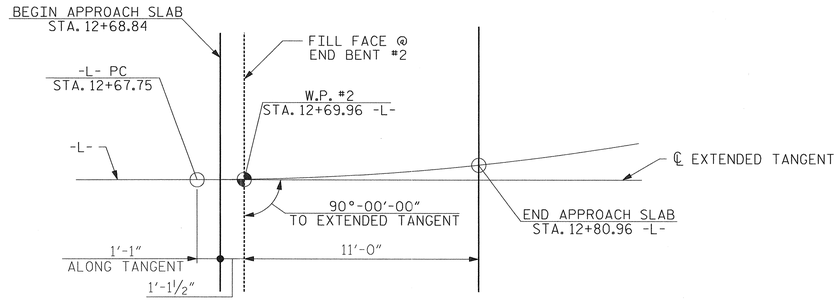

DETAIL A

THE CONTRACTOR SHALL USE THE TANGENT EXTENDED FOR THE LAYOUT OF THE FOLLOWING:

1. LAYOUT OF THE APPROACH SLAB AT END BENT 2.
2. COMPUTATIONS OF APPROACH SLAB ELEVATIONS AT END BENT 2.

-L- HORIZONTAL CURVE DATA

P.I. STA. 13+20.56
Δ = 23° 51' 31.9" (LT)
D = 22° 55' 05.9"
L = 104.10'
T = 52.82'
R = 250.00'
RO = SEE PLANS

DRAWN BY : JML DATE : 5/2012
CHECKED BY : JMR DATE : 11/2012

PROJECT NO. 17BP.14.R.59

CHEROKEE COUNTY

STATION: 12+43.84 -L-

SHEET 1 OF 2 REPLACES BRIDGE NO. 184

NORTH CAROLINA PROFESSIONAL SEAL 18442 ENGINEER LEON BOSWELL 3-17-2014

RS&H IMPROVING YOUR WORLD

RS&H Architects-Engineers-Planners, Inc.
8601 Six Forks Road, Suite 260
Raleigh, NC 27615
919-846-5701 FAX 919-846-9080
www.rsandh.com
North Carolina License Nos. 50073 * F-0493 * C-28

STATE OF NORTH CAROLINA
DEPARTMENT OF TRANSPORTATION
RALEIGH

GENERAL DRAWING

FOR BRIDGE OVER MCCLELLAN CREEK ON SR 1509 BETWEEN DEAD END AND SR 1507

REVISIONS						SHEET NO.
NO.	BY:	DATE:	NO.	BY:	DATE:	S-1
1			3			TOTAL SHEETS
2			4			13

BM#1: RR SPIKE IN 24" POPLAR TREE
47.90 FT. LEFT OF STA. 12+15.30, EL. 1976.60

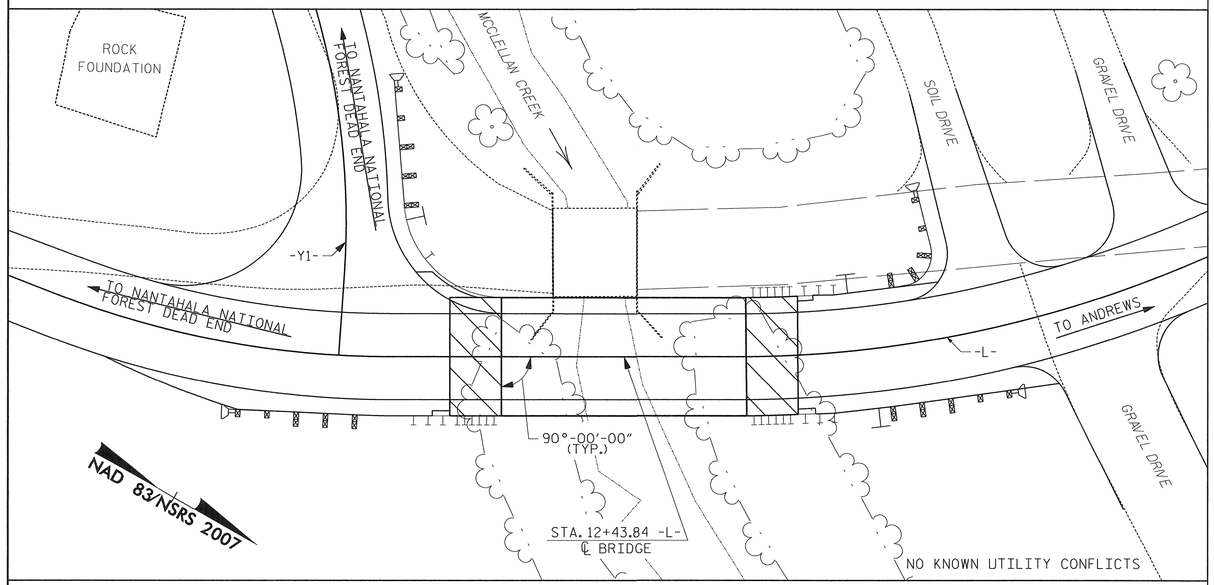

LOCATION SKETCH

NOTES:

ASSUMED LIVE LOAD = HL 93 OR ALTERNATE LOADING.

FOR OTHER DESIGN DATA AND GENERAL NOTES, SEE SHEET SN.

FOR EROSION CONTROL MEASURES, SEE EROSION CONTROL PLANS.

THIS BRIDGE HAS BEEN DESIGNED IN ACCORDANCE WITH THE AASHTO LRFD BRIDGE DESIGN SPECIFICATIONS.

THE EXISTING STRUCTURE CONSISTING OF ONE 18'-6" SPAN, A TIMBER FLOOR SUPPORTED BY 11 5¾"X 1'-1¾" TIMBER JOISTS WITH A CLEAR ROADWAY WIDTH OF 19'-2" AND SUPPORTED BY TIMBER CAPS ON TIMBER POSTS AND LOCATED AT THE PROPOSED STRUCTURE SHALL BE REMOVED. THE EXISTING BRIDGE IS PRESENTLY POSTED BELOW THE LEGAL LOAD LIMIT. SHOULD THE STRUCTURAL INTEGRITY OF THE BRIDGE FURTHER DETERIORATE, THIS LOAD LIMITATION MAY BE REDUCED AS FOUND NECESSARY DURING THE LIFE OF THE PROJECT.

THE SUBSTRUCTURE OF THE EXISTING BRIDGE INDICATED ON THE PLANS IS FROM THE BEST INFORMATION AVAILABLE. SINCE THIS INFORMATION IS SHOWN FOR THE CONVENIENCE OF THE CONTRACTOR, THE CONTRACTOR SHALL HAVE NO CLAIM WHATSOEVER AGAINST THE DEPARTMENT OF TRANSPORTATION FOR ANY DELAYS OR ADDITIONAL COST INCURRED BASED ON DIFFERENCES BETWEEN THE EXISTING BRIDGE SUBSTRUCTURE SHOWN ON THE PLANS AND THE ACTUAL CONDITIONS AT THE PROJECT SITE.

REMOVAL OF THE EXISTING BRIDGE SHALL BE PERFORMED SO AS NOT TO ALLOW DEBRIS TO FALL INTO THE WATER. THE CONTRACTOR SHALL REMOVE THE BRIDGE AND SUBMIT PLANS FOR DEMOLITION IN ACCORDANCE WITH ARTICLE 402-2 OF THE STANDARD SPECIFICATIONS.

THE MATERIAL SHOWN IN THE CROSS-HATCHED AREA ON SHEET 1 OF 2 SHALL BE EXCAVATED FOR A DISTANCE 40 FT TO THE LEFT AND 26 FT TO THE RIGHT OF CENTERLINE ROADWAY AS DIRECTED BY THE ENGINEER. THIS WORK WILL BE MEASURED AND PAID FOR AT THE CONTRACT LUMP SUM PRICE FOR UNCLASSIFIED STRUCTURE EXCAVATION. SEE SECTION 412 OF THE STANDARD SPECIFICATIONS.

THIS STRUCTURE HAS BEEN DESIGNED IN ACCORDANCE WITH HEC 18, "EVALUATING SCOUR AT BRIDGES," MAY, 2001.

ASPHALT WEARING SURFACE IS INCLUDED IN ROADWAY QUANTITY ON ROADWAY PLANS.

FOR SUBMITTAL OF WORKING DRAWINGS, SEE SPECIAL PROVISIONS.

FOR GROUT FOR STRUCTURES, SEE SPECIAL PROVISIONS.

FOR FALSEWORK AND FORMWORK, SEE SPECIAL PROVISIONS.

FOR CRANE SAFETY, SEE SPECIAL PROVISIONS.

THIS BRIDGE IS LOCATED IN SEISMIC ZONE 1.

HYDRAULIC DATA

DESIGN DISCHARGE	= 750 CFS
FREQUENCY OF DESIGN FLOOD	= 25 YRS
DESIGN HIGH WATER ELEVATION	= 1974.3
DRAINAGE AREA	= 2.33 SQ.MI.
BASIC DISCHARGE (Q100)	= 1100 CFS
BASIC HIGH WATER ELEVATION	= 1974.56

OVERTOPPING FLOOD DATA

OVERTOPPING DISCHARGE	= 2095 CFS
FREQUENCY OF OVERTOPPING FLOOD	= 500+ YRS
OVERTOPPING FLOOD ELEVATION	= 1975.6

FOUNDATION NOTES:

FOR PILES, SEE SECTION 450 OF THE STANDARD SPECEFICATIONS.

PILES AT END BENT NO. 1 AND 2 ARE DESIGNED FOR A FACTORED RESISTANCE OF 77 TONS PER PILE. DRIVE PILES TO A REQUIRED DRIVING RESISTANCE OF 128 TONS PER PILE.

STEEL H-PILE POINTS ARE REQUIRED FOR STEEL H-PILES. FOR STEEL PILE POINTS, SEE SECTION 450 OF THE STANDARD SPECIFICATIONS.SPECIFICATIONS.

TOTAL BILL OF MATERIAL

	REMOVAL OF EXISTING STRUCTURE	UNCLASSIFIED STRUCTURE EXCAVATION	CLASS A CONCRETE	BRIDGE APPROACH SLABS	REINFORCING STEEL	HP 12 X 53 STEEL PILES		STEEL PILE POINTS	VERTICAL CONCRETE BARRIER RAIL	RIP RAP CLASS II (2'-0" THICK)	GEOTEXTILE FOR DRAINAGE	ELASTOMERIC BEARINGS	3'-0" X 1'-9" PRESTRESSED CONCRETE CORED SLABS	
	LUMP SUM	LUMP SUM	CU. YDS.	LUMP SUM	LBS.	NO.	LIN. FT.	EACH	LIN. FT.	TONS	SQ. YDS.	LUMP SUM	NO.	LIN. FT.
SUPERSTRUCTURE									100.25				9	450
END BENT 1			18.8		2299	5	250	5		100	62			
END BENT 2			18.8		2299	5	175	5		70	50			
TOTAL	LUMP SUM	LUMP SUM	37.6	LUMP SUM	4598	10	425	10	100.25	170	112	LUMP SUM	9	450

PROJECT NO. 17BP.14.R.59
CHEROKEE COUNTY
STATION: 12+43.84 -L-

SHEET 2 OF 2

NORTH CAROLINA PROFESSIONAL SEAL 18442 ENGINEER RICHARD LEON MCDANIEL 3-17-2014

RS&H IMPROVING YOUR WORLD

RS&H Architects-Engineers-Planners, Inc.
8601 Six Forks Road, Suite 260
Raleigh, NC 27615
919-846-6701 FAX 919-846-9080
www.rsandh.com
North Carolina License Nos. 00073 * F-0481 * C-28

STATE OF NORTH CAROLINA
DEPARTMENT OF TRANSPORTATION
RALEIGH

GENERAL DRAWING

FOR BRIDGE OVER MCCLELLAN CREEK ON SR 1509 BETWEEN DEAD END AND SR 1507

REVISIONS						SHEET NO.
NO.	BY:	DATE:	NO.	BY:	DATE:	S-2
1			3			TOTAL SHEETS
2			4			13

DRAWN BY : JML DATE : 5/2012
CHECKED BY : JMR DATE : 11/2012

LOAD AND RESISTANCE FACTOR RATING (LRFD) SUMMARY FOR PRESTRESSED CONCRETE GIRDERS

LEVEL		VEHICLE	WEIGHT (W) (TONS)	CONTROLLING LOAD RATING	MINIMUM RATING FACTORS (RF)	TONS = W X RF	STRENGTH I LIMIT STATE										SERVICE III LIMIT STATE						COMMENT NUMBER
								MOMENT					SHEAR					MOMENT						
							LIVELOAD FACTORS	DISTRIBUTION FACTORS (DF)	RATING FACTOR	SPAN	GIRDER LOCATION	DISTANCE FROM LEFT END OF SPAN (ft)	DISTRIBUTION FACTORS (DF)	RATING FACTOR	SPAN	GIRDER LOCATION	DISTANCE FROM LEFT END OF SPAN (ft)	LIVELOAD FACTORS	DISTRIBUTION FACTORS (DF)	RATING FACTOR	SPAN	GIRDER LOCATION	DISTANCE FROM LEFT END OF SPAN (ft)	
DESIGN LOAD RATING		HL-93(Inv)	N/A	1	1.394	--	1.75	0.276	1.57	50′	EL	24.5	0.531	**1.39**	50′	EL	**2.45**	0.80	0.276	1.44	50′	EL	24.5	
		HL-93(Opr)	N/A	--	1.807	--	1.35	0.276	2.03	50′	EL	24.5	0.531	1.81	50′	EL	2.45	N/A	--	--	--	--	--	
		HS-20(Inv)	36.000	2	1.667	60.007	1.75	0.276	1.95	50′	EL	24.5	0.531	**1.67**	50′	EL	**2.45**	0.80	0.276	1.79	50′	EL	24.5	
		HS-20(Opr)	36.000	--	2.161	77.787	1.35	0.276	2.52	50′	EL	24.5	0.531	2.16	50′	EL	2.45	N/A	--	--	--	--	--	
LEGAL LOAD RATING	SV	SNSH	13.500	--	3.635	49.079	1.4	0.276	4.95	50′	EL	24.5	0.531	4.7	50′	EL	2.45	0.80	0.276	3.64	50′	EL	24.5	
		SNGARBS2	20.000	--	2.871	57.42	1.4	0.276	3.91	50′	EL	24.5	0.531	3.42	50′	EL	2.45	0.80	0.276	2.87	50′	EL	24.5	
		SNAGRIS2	22.000	--	2.778	61.109	1.4	0.276	3.78	50′	EL	19.6	0.531	3.21	50′	EL	2.45	0.80	0.276	2.78	50′	EL	24.5	
		SNCOTTS3	27.250	--	1.814	49.418	1.4	0.276	2.47	50′	EL	24.5	0.531	2.36	50′	EL	2.45	0.80	0.276	1.81	50′	EL	24.5	
		SNAGGRS4	34.925	--	1.577	55.063	1.4	0.276	2.15	50′	EL	24.5	0.531	2.01	50′	EL	2.45	0.80	0.276	1.58	50′	EL	24.5	
		SNS5A	35.550	--	1.537	54.657	1.4	0.276	2.09	50′	EL	24.5	0.531	2.07	50′	EL	2.45	0.80	0.276	1.54	50′	EL	24.5	
		SNS6A	39.950	--	1.438	57.43	1.4	0.276	1.96	50′	EL	24.5	0.531	1.91	50′	EL	2.45	0.80	0.276	1.44	50′	EL	24.5	
		SNS7B	42.000	--	1.370	57.54	1.4	0.276	1.87	50′	EL	24.5	0.531	1.91	50′	EL	2.45	0.80	0.276	1.37	50′	EL	24.5	
	TTST	TNAGRIT3	33.000	--	1.761	58.118	1.4	0.276	2.4	50′	EL	24.5	0.531	2.25	50′	EL	2.45	0.80	0.276	1.76	50′	EL	24.5	
		TNT4A	33.075	--	1.777	58.759	1.4	0.276	2.42	50′	EL	24.5	0.531	2.17	50′	EL	2.45	0.80	0.276	1.78	50′	EL	24.5	
		TNT6A	41.600	--	1.480	61.558	1.4	0.276	2.01	50′	EL	24.5	0.531	2.08	50′	EL	2.45	0.80	0.276	1.48	50′	EL	24.5	
		TNT7A	42.000	--	1.502	63.087	1.4	0.276	2.05	50′	EL	24.5	0.531	1.94	50′	EL	2.45	0.80	0.276	1.50	50′	EL	24.5	
		TNT7B	42.000	--	1.566	65.773	1.4	0.276	2.13	50′	EL	24.5	0.531	1.84	50′	EL	2.45	0.80	0.276	1.57	50′	EL	24.5	
		TNAGRIT4	43.000	--	1.486	63.902	1.4	0.276	2.02	50′	EL	24.5	0.531	1.77	50′	EL	2.45	0.80	0.276	1.49	50′	EL	24.5	
		TNAGT5A	45.000	--	1.388	62.47	1.4	0.276	1.89	50′	EL	24.5	0.531	1.8	50′	EL	2.45	0.80	0.276	1.39	50′	EL	24.5	
		TNAGT5B	45.000	3	1.360	61.206	1.4	0.276	1.85	50′	EL	24.5	0.531	1.68	50′	EL	2.45	0.80	0.276	**1.36**	50′	EL	**24.5**	

LOAD FACTORS:

DESIGN LOAD RATING FACTORS	LIMIT STATE	γ_{DC}	γ_{DW}
	STRENGTH I	1.25	1.50
	SERVICE III	1.00	1.00

NOTES:

MINIMUM RATING FACTORS ARE BASED ON THE STRENGTH I AND SERVICE III LIMIT STATES.

ALLOWABLE STRESSES FOR SERVICE III LIMIT STATE ARE AS REQUIRED FOR DESIGN.

COMMENTS:

1.

2.

3.

4.

⟨#⟩ CONTROLLING LOAD RATING

⟨1⟩ DESIGN LOAD RATING (HL-93)

⟨2⟩ DESIGN LOAD RATING (HS-20)

⟨3⟩ LEGAL LOAD RATING **

** SEE CHART FOR VEHICLE TYPE

GIRDER LOCATION

I - INTERIOR GIRDER
EL - EXTERIOR LEFT GIRDER
ER - EXTERIOR RIGHT GIRDER

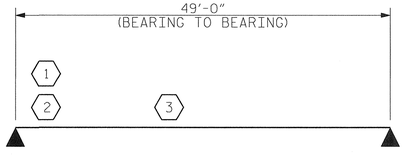

LRFR SUMMARY

FOR SPAN A

PROJECT NO. 17BP.14.R.59

CHEROKEE COUNTY

STATION: 12+43.84 -L-

SHEET 1 OF 1

NORTH CAROLINA PROFESSIONAL SEAL 18442 ENGINEER RICHARD LEON BOLLINGER III 3-17-2014

RS&H IMPROVING YOUR WORLD

RS&H Architects-Engineers-Planners, Inc.
8601 Six Forks Road, Suite 260
Raleigh, NC 27615
919-845-6701 FAX 919-846-9080
www.rsandh.com
North Carolina License Nos. 50073 * F-0493 * C-28

STATE OF NORTH CAROLINA
DEPARTMENT OF TRANSPORTATION
RALEIGH

STANDARD

LRFR SUMMARY FOR 50′ CORED SLAB UNIT 90° SKEW (NON-INTERSTATE TRAFFIC)

REVISIONS					
NO.	BY:	DATE:	NO.	BY:	DATE:
1			3		
2			4		

SHEET NO. S-3

TOTAL SHEETS 13

ASSEMBLED BY :	JML	DATE : 7/2012
CHECKED BY :	JMR	DATE : 11/2012
DRAWN BY : CVC	6/10	
CHECKED BY : DNS	6/10	

STD. NO. 21LRFR1_90S_50L

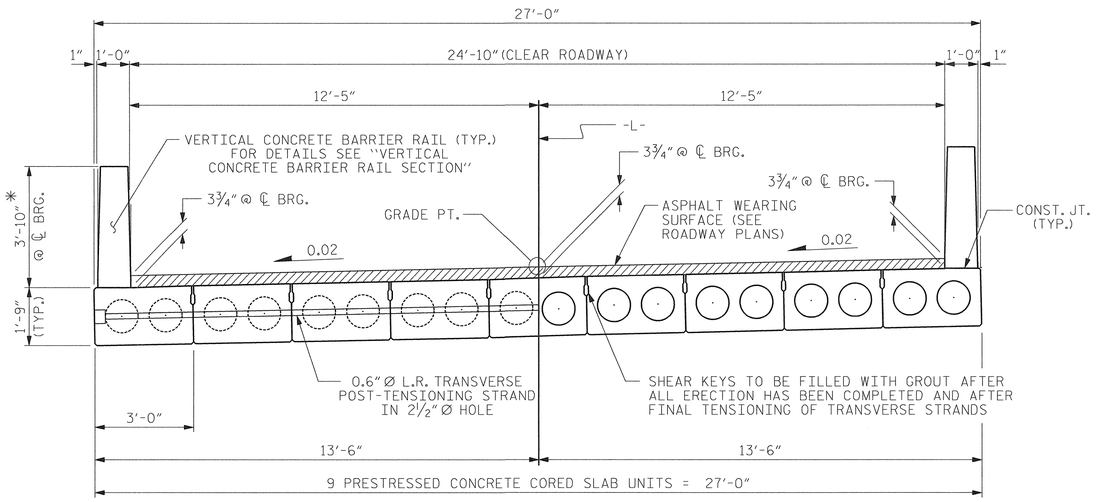

HALF SECTION
AT INTERMEDIATE DIAPHRAGMS

HALF SECTION
THROUGH VOIDS

TYPICAL SECTION

* - THE MAXIMUM BARRIER RAIL HEIGHT AND ASPHALT THICKNESS IS SHOWN. THE HEIGHT OF THE BARRIER RAIL AND ASPHALT THICKNESS VARIES WHILE THE TOP OF THE BARRIER RAIL FOLLOWS THE PROFILE OF THE GUTTERLINE. FOR RAIL HEIGHT DETAILS AND ASPHALT THICKNESS SEE THE "VERTICAL CONCRETE BARRIER RAIL SECTION" DETAIL.

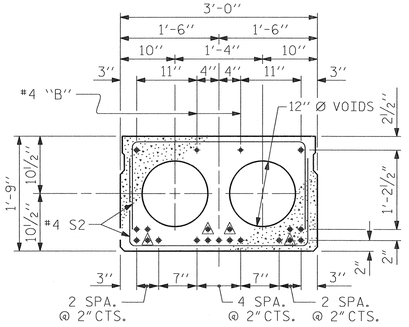

INTERIOR SLAB SECTION (50' UNIT)

(19 STRANDS REQUIRED)

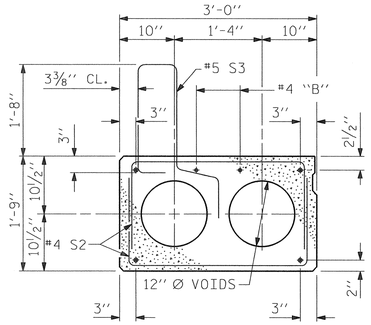

EXT. SLAB SECTION

(FOR PRESTRESSED STRAND LAYOUT, SEE INTERIOR SLAB SECTION.)

0.6" Ø LOW RELAXATION STRAND LAYOUT

DEBONDING LEGEND

△ BOND SHALL BE BROKEN ON THESE STRANDS FOR A DISTANCE OF 6'-0" FROM END OF CORED SLAB UNIT. SEE STANDARD SPECIFICATIONS, ARTICLE 1078-7.

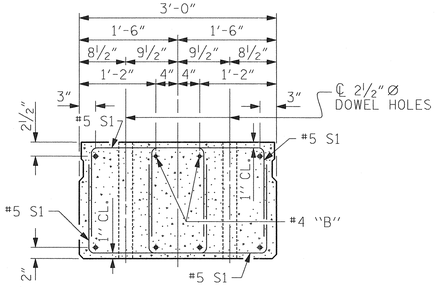

END ELEVATION

SHOWING PLACEMENT OF DOUBLE STIRRUPS AND LOCATION OF DOWEL HOLES. (STRAND LAYOUT NOT SHOWN.) INTERIOR SLAB UNIT SHOWN-EXTERIOR SLAB UNIT SIMILAR EXCEPT SHEAR KEY LOCATION.

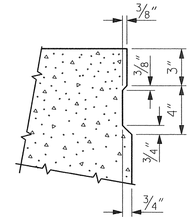

SHEAR KEY DETAIL

NOTE: OMIT SHEAR KEY ON OUTSIDE FACE OF EXTERIOR CORED SLABS.

FIXED END

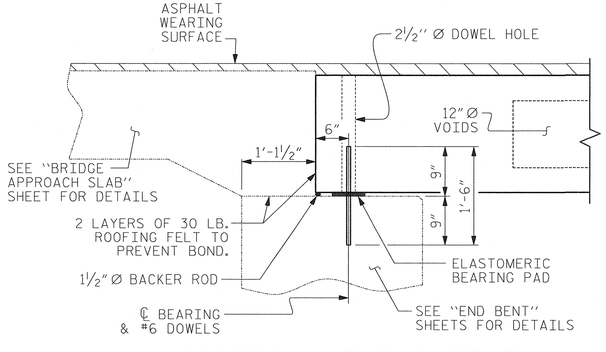

SECTION AT END BENT

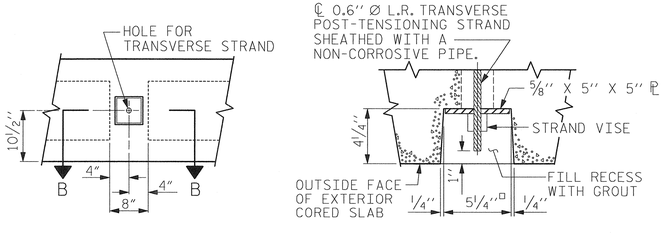

ELEVATION VIEW

SECTION B-B

GROUTED RECESS AT END OF POST-TENSIONED STRAND OF CORED SLABS

PROJECT NO. 17BP.14.R.59
CHEROKEE COUNTY
STATION: 12+43.84 -L-

SHEET 1 OF 3

NORTH CAROLINA PROFESSIONAL SEAL 18442 ENGINEER RICHARD LEON BRUNTMYER
3-17-2014

RS&H IMPROVING YOUR WORLD

RS&H Architects-Engineers-Planners, Inc.
8601 Six Forks Road, Suite 260
Raleigh, NC 27615
919-846-8701 FAX 919-846-9080
www.rsandh.com
North Carolina License Nos. 00073 * F-0493 * C-28

STATE OF NORTH CAROLINA
DEPARTMENT OF TRANSPORTATION
RALEIGH

STANDARD
3'-0" X 1'-9"
PRESTRESSED CONCRETE
CORED SLAB UNIT
90° SKEW

REVISIONS						SHEET NO.
NO.	BY:	DATE:	NO.	BY:	DATE:	S-4
1			3			TOTAL SHEETS
2			4			13

ASSEMBLED BY :	JML	DATE : 7/2012
CHECKED BY :	JMR	DATE : 11/2012
DRAWN BY : DGE	5/09	REV. 12/11 MAA/AAC
CHECKED BY : BCH	6/09	

STD. NO. 21"PCS2_27_90S

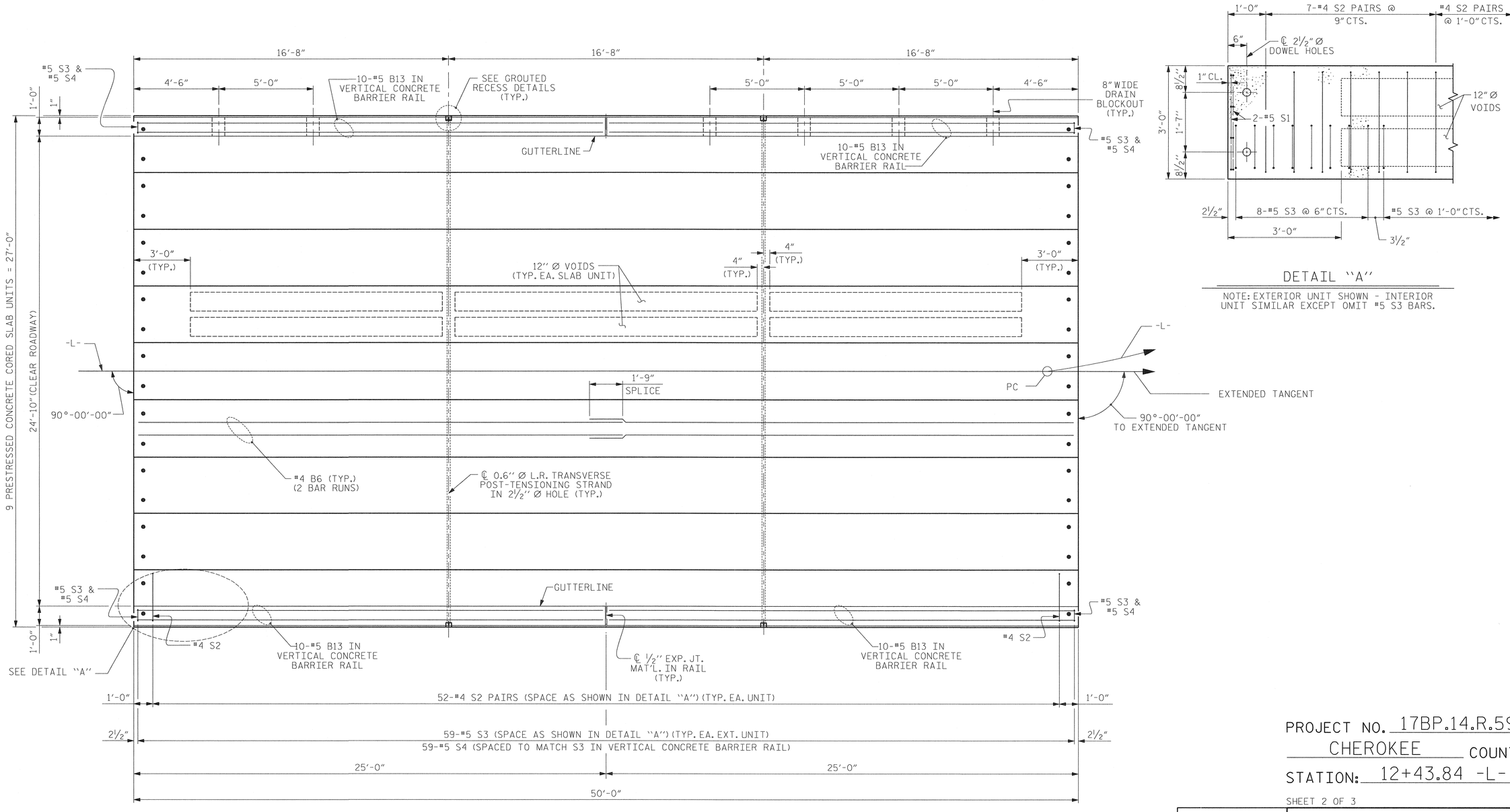

PLAN OF UNIT

DETAIL "A"

NOTE: EXTERIOR UNIT SHOWN - INTERIOR UNIT SIMILAR EXCEPT OMIT #5 S3 BARS.

PROJECT NO. 17BP.14.R.59

CHEROKEE COUNTY

STATION: 12+43.84 -L-

SHEET 2 OF 3

ASSEMBLED BY :	JML	DATE :	7/2012
CHECKED BY :	JMR	DATE :	11/2012
DRAWN BY : DGE	5/09	REV. 12/5/11	MAA/AAC
CHECKED BY : BCH	6/09		

NORTH CAROLINA PROFESSIONAL SEAL 18442 ENGINEER RICHARD LEON BOLLINGER JR. 3-17-2014

RS&H IMPROVING YOUR WORLD

RS&H Architects-Engineers-Planners, Inc.
8601 Six Forks Road, Suite 260
Raleigh, NC 27615
919-846-8701 FAX 919-846-9080
www.rsandh.com
North Carolina License Nos. 00073 * F-0493 * C-28

STATE OF NORTH CAROLINA
DEPARTMENT OF TRANSPORTATION
RALEIGH

PLAN OF 50' UNIT 24'-10" CLEAR ROADWAY 90° SKEW

REVISIONS						SHEET NO.
NO.	BY:	DATE:	NO.	BY:	DATE:	S-5
1			3			TOTAL SHEETS
2			4			13

STD. NO. 21"PCS_27_90S_50L

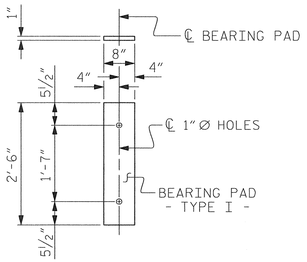

FIXED END
(TYPE I - 18 REQ'D)

ELASTOMERIC BEARING DETAILS

ELASTOMER IN ALL BEARINGS SHALL BE 50 DUROMETER HARDNESS.

GRADE 270 STRANDS	
	0.6"Ø L.R.
AREA (SQUARE INCHES)	0.217
ULTIMATE STRENGTH (LBS. PER STRAND)	58,600
APPLIED PRESTRESS (LBS. PER STRAND)	43,950

CONCRETE RELEASE STRENGTH	
UNIT	PSI
50' UNITS	4900

DEAD LOAD DEFLECTION AND CAMBER	
	3'-0" x 1'-9"
50' CORED SLAB UNIT	0.6"Ø L.R. STRAND
CAMBER (SLAB ALONE IN PLACE)	2½" ↑
DEFLECTION DUE TO SUPERIMPOSED DEAD LOAD**	¼" ↓
FINAL CAMBER	2¼" ↑

** INCLUDES FUTURE WEARING SURFACE

BAR TYPES

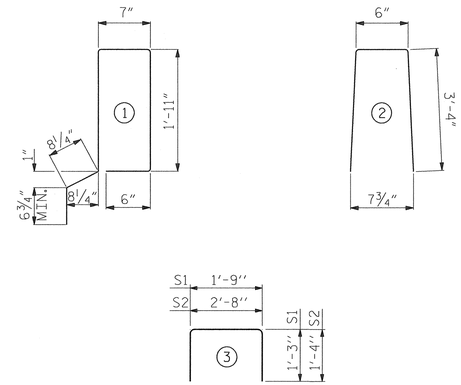

ALL BAR DIMENSIONS ARE OUT TO OUT

CORED SLABS REQUIRED			
	NUMBER	LENGTH	TOTAL LENGTH
50' UNIT			
EXTERIOR C.S.	2	50'-0"	100'-0"
INTERIOR C.S.	7	50'-0"	350'-0"
TOTAL	9		450'-0"

BILL OF MATERIAL FOR ONE 50' CORED SLAB UNIT

				EXTERIOR UNIT		INTERIOR UNIT	
BAR	NUMBER	SIZE	TYPE	LENGTH	WEIGHT	LENGTH	WEIGHT
B6	4	#4	STR	25'-9"	69	25'-9"	69
S1	8	#5	3	4'-3"	35	4'-3"	35
S2	104	#4	3	5'-4"	371	5'-4"	371
✳ S3	59	#5	1	6'-2"	379		
REINFORCING STEEL			LBS.		475		475
✳EPOXY COATED REINFORCING STEEL			LBS.		379		
6500 P.S.I. CONCRETE			CU. YDS.		7.1		7.1
0.6"Ø L.R. STRANDS			No.		19		19

BILL OF MATERIAL FOR VERTICAL CONCRETE BARRIER RAIL

BAR	BARS PER PAIR OF EXTERIOR UNITS 50' UNIT	TOTAL NO.	SIZE	TYPE	LENGTH	WEIGHT
✳B13	40	40	#5	STR	24'-7"	1026
✳ S4	118	118	#5	2	7'-2"	882
✳EPOXY COATED REINFORCING STEEL				LBS.		1908
CLASS AA CONCRETE				CU.YDS.		13.1
TOTAL VERTICAL CONCRETE BARRIER RAIL				LN. FT.		100.25

NOTES

ALL PRESTRESSING STRANDS SHALL BE 7-WIRE LOW RELAXATION GRADE 270 STRANDS AND SHALL CONFORM TO AASHTO M203 EXCEPT FOR SAMPLING REQUIREMENTS WHICH SHALL BE IN ACCORDANCE WITH THE STANDARD SPECIFICATIONS.

ALL REINFORCING STEEL CAST WITH THE CORED SLAB SECTIONS SHALL BE GRADE 60 AND SHALL BE INCLUDED IN THE UNIT PRICE BID FOR PRESTRESSED CONCRETE CORED SLABS.

RECESSES FOR TRANSVERSE STRANDS SHALL BE GROUTED AFTER THE TENSIONING OF THE STRANDS.

THE 2½"Ø DOWEL HOLES AT FIXED ENDS OF SLAB SECTIONS SHALL BE FILLED WITH NON-SHRINK GROUT.

THE BACKER ROD SHALL CONFORM TO THE REQUIREMENTS OF TYPE M BOND BREAKER. SEE SECTION 1028 OF THE STANDARD SPECIFICATIONS.

WHEN CORED SLABS ARE CAST, AN INTERNAL HOLD-DOWN SYSTEM SHALL BE EMPLOYED TO PREVENT VOIDS FROM RISING OR MOVING SIDEWAYS. AT LEAST SIX WEEKS PRIOR TO CASTING CORED SLABS, THE CONTRACTOR SHALL SUBMIT TO THE ENGINEER FOR REVIEW AND COMMENT, DETAILED DRAWINGS OF THE PROPOSED HOLD-DOWN SYSTEM. IN ADDITION TO STRUCTURAL DETAILS, LOCATION AND SPACING OF THE HOLD-DOWNS SHALL BE INDICATED.

ALL REINFORCING STEEL IN THE VERTICAL CONCRETE BARRIER RAIL SHALL BE EPOXY COATED.

PRESTRESSING STRANDS SHALL BE CUT FLUSH WITH THE CORED SLAB UNIT ENDS.

APPLY EPOXY PROTECTIVE COATING TO CORED SLAB UNIT ENDS.

GROOVED CONTRACTION JOINTS, ½" IN DEPTH, SHALL BE TOOLED IN ALL EXPOSED FACES OF THE BARRIER RAIL AND IN ACCORDANCE WITH ARTICLE 825-10(B) OF THE STANDARD SPECIFICATIONS. A CONTRACTION JOINT SHALL BE LOCATED AT EACH THIRD POINT BETWEEN BARRIER RAIL EXPANSION JOINTS. ONLY ONE CONTRACTION JOINT IS REQUIRED AT MIDPOINT OF BARRIER RAIL SEGMENTS LESS THAN 20 FEET IN LENGTH AND NO CONTRACTION JOINTS ARE REQUIRED FOR THOSE SEGMENTS LESS THAN 10 FEET IN LENGTH.

TRANSVERSE POST TENSIONING OF THE CORED SLAB UNITS SHALL BE DONE IN ACCORDANCE WITH THE STANDARD SPECIFICATIONS.

THE TRANSFER OF LOAD FROM THE ANCHORAGES TO THE CORED SLAB UNIT SHALL BE DONE WHEN THE CONCRETE HAS REACHED A COMPRESSIVE STRENGTH OF NOT LESS THAN THE REQUIRED STRENGTH SHOWN IN THE "CONCRETE RELEASE STRENGTH" TABLE.

FOR GROUT FOR STRUCTURES, SEE SPECIAL PROVISIONS.

THE DRAIN OPENING AT THE GUTTERLINE SHALL BE 4"X 8", THE HEIGHT OF THE BLOCKOUT IN THE VERTICAL CONCRETE BARRIER RAIL SHALL EXTEND FROM THE TOP OF THE CORED SLAB UNIT TO THE TOP OF THE DRAIN OPENING.

APPLY EPOXY PROTECTIVE COATING TO EXTERIOR FACE OF THE EXTERIOR CORED SLAB UNITS THAT REQUIRE DRAINS IN THE BARRIER RAIL.

GUTTERLINE ASPHALT THICKNESS & RAIL HEIGHT		
24'-10" CLEAR ROADWAY	ASPHALT OVERLAY THICKNESS	RAIL HEIGHT
	℗ MID-SPAN	℗ MID-SPAN
	SUPERED SECTION	
50' UNITS	1½"	3'-7¾"

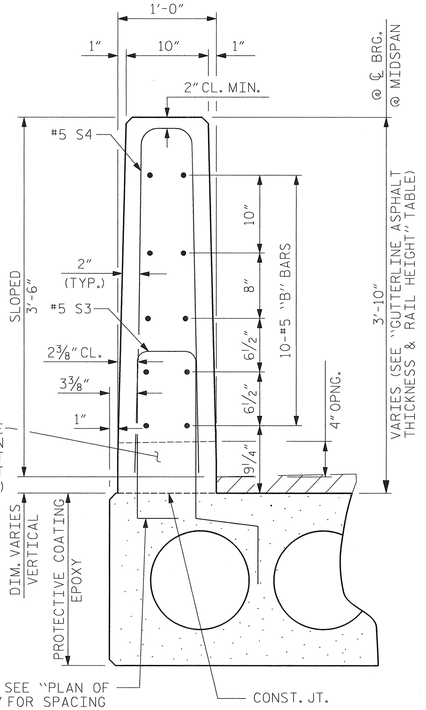

VERTICAL CONCRETE BARRIER RAIL SECTION

NOTE: LEFT VCBR SHOWN, RIGHT VCBR SIMILAR EXCEPT OMIT DRAIN DETAIL.

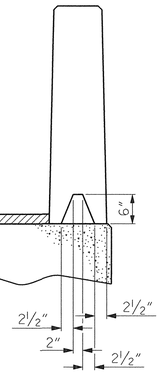

SECTION S-S
AT DAM IN OPEN JOINT
(THIS IS TO BE USED ONLY WHEN SLIP FORM IS USED)

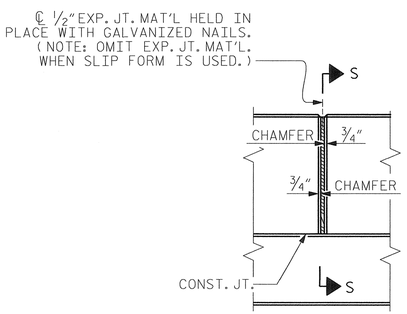

ELEVATION AT EXPANSION JOINTS

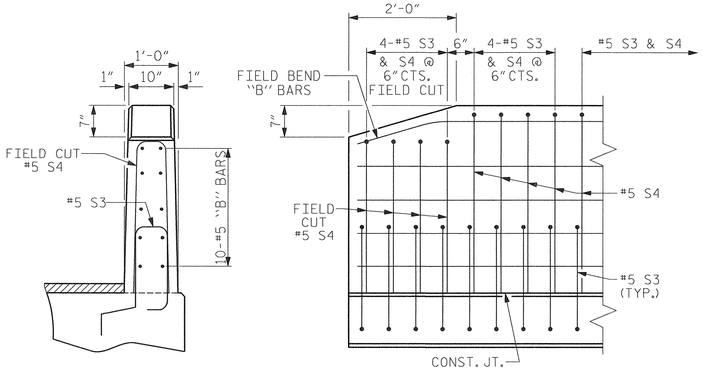

END VIEW SIDE VIEW

END OF RAIL DETAILS

PROJECT NO. 17BP.14.R.59
CHEROKEE COUNTY
STATION: 12+43.84 -L-

SHEET 3 OF 3

ASSEMBLED BY :	JML	DATE :	7/2012
CHECKED BY :	JMR	DATE :	11/2012
DRAWN BY :	DGE 5/09	REV. 12/11	MAA/AAC
CHECKED BY :	BCH 6/09		

RS&H Architects-Engineers-Planners, Inc.
8601 Six Forks Road, Suite 260
Raleigh, NC 27615
919-846-6701 FAX 919-846-9080
www.rsandh.com
North Carolina License Nos. 00073 * F-0493 * C-28

NORTH CAROLINA PROFESSIONAL SEAL 18442 ENGINEER RICHARD FOOK BOLLINGER JR. 3-17-2014

RS&H IMPROVING YOUR WORLD

STATE OF NORTH CAROLINA
DEPARTMENT OF TRANSPORTATION
RALEIGH

STANDARD
3'-0" X 1'-9"
PRESTRESSED CONCRETE
CORED SLAB UNIT
90° SKEW

REVISIONS						SHEET NO.
NO.	BY:	DATE:	NO.	BY:	DATE:	S-6
1			3			TOTAL SHEETS
2			4			13

STD. NO. 21"PCS3_27_90S

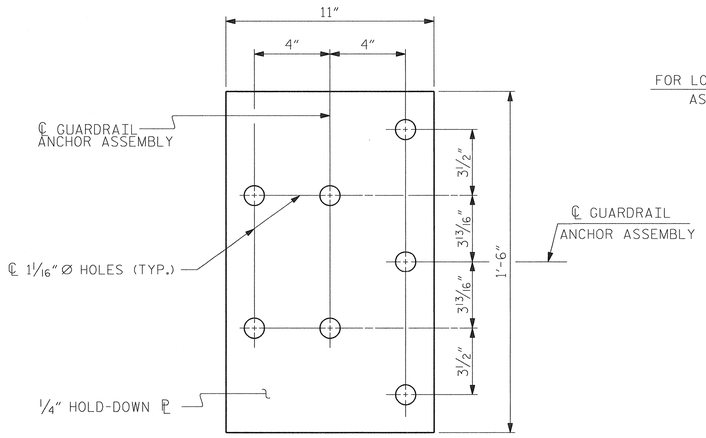

PLAN

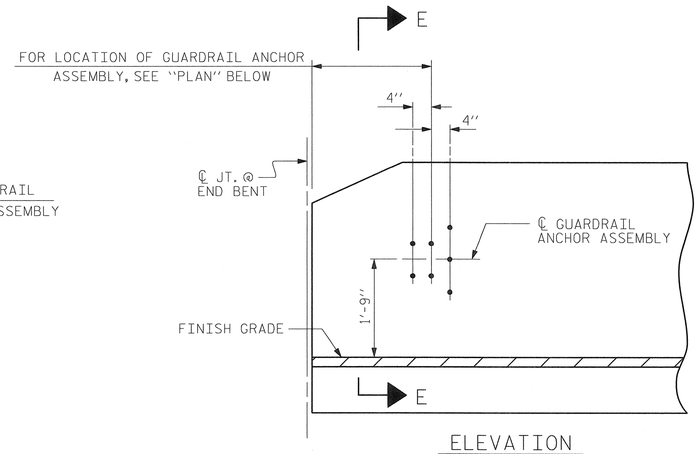

ELEVATION

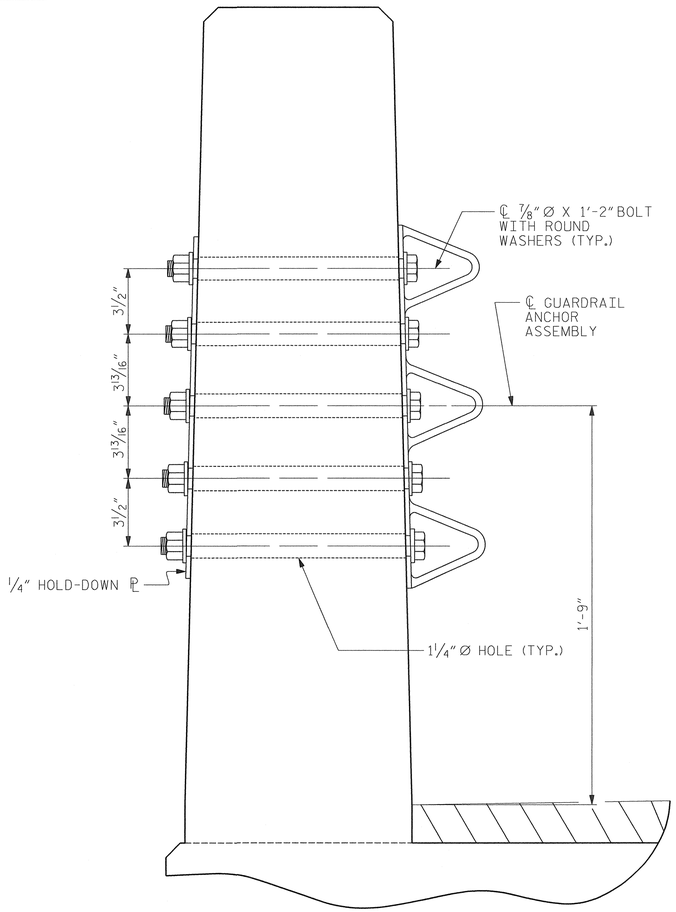

SECTION E-E

GUARDRAIL ANCHOR ASSEMBLY DETAILS
LOCATION OF GUARDRAIL ANCHOR AT END POST

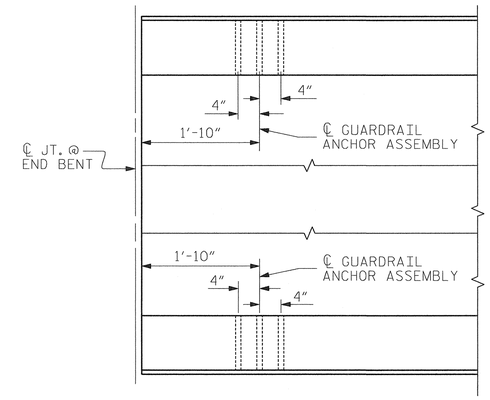

PLAN

LOCATION OF ANCHORS FOR GUARDRAIL

END BENT #1 SHOWN, END BENT #2 SIMILAR.

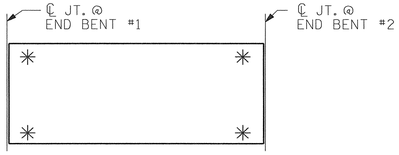

SKETCH SHOWING POINTS OF ATTACHMENT

✳ DENOTES GUARDRAIL ANCHOR ASSEMBLY

NOTES

THE GUARDRAIL ANCHOR ASSEMBLY SHALL CONSIST OF A 1/4" HOLD DOWN PLATE AND 7 - 7/8" Ø BOLTS WITH NUTS AND WASHERS.

THE HOLD-DOWN PLATE SHALL CONFORM TO AASHTO M270 GRADE 36. AFTER FABRICATION, THE HOLD-DOWN PLATE SHALL BE HOT-DIP GALVANIZED IN ACCORDANCE WITH AASHTO M111.

BOLTS SHALL CONFORM TO THE REQUIREMENTS OF ASTM A307 AND NUTS SHALL CONFORM TO THE REQUIREMENTS OF AASHTO M291. BOLTS, NUTS AND WASHERS SHALL BE GALVANIZED. (AT THE CONTRACTOR'S OPTION, STAINLESS STEEL BOLTS, NUTS AND WASHERS MAY BE USED AS AN ALTERNATE FOR THE 7/8" Ø GALVANIZED BOLTS, NUTS AND WASHERS. THEY SHALL CONFORM TO OR EXCEED THE MECHANICAL REQUIREMENTS OF ASTM A307. THE USE OF THIS ALTERNATE SHALL BE APPROVED BY THE ENGINEER.)

THE GUARDRAIL ANCHOR ASSEMBLY IS REQUIRED AT ALL POINTS WHERE APPROACH GUARDRAIL IS TO BE ATTACHED TO THE END OF BARRIER RAIL. FOR POINTS OF ATTACHMENT, SEE SKETCH.

AFTER INSTALLATION, THE EXPOSED THREAD OF THE BOLT SHALL BE BURRED WITH A SHARP POINTED TOOL.

THE COST OF THE GUARDRAIL ANCHOR ASSEMBLY SHALL BE INCLUDED IN THE UNIT CONTRACT PRICE BID FOR VERTICAL CONCRETE BARRIER RAIL.

THE VERTICAL REINFORCING BARS MAY BE SHIFTED SLIGHTLY IN THE VERTICAL CONCRETE BARRIER RAIL TO CLEAR ASSEMBLY BOLTS.

THE 1 1/4" Ø HOLES SHALL BE FORMED OR DRILLED WITH A CORE BIT. IMPACT TOOLS WILL NOT BE PERMITTED. ANY CONCRETE DAMAGED BY THIS WORK SHALL BE REPAIRED TO THE SATISFACTION OF THE ENGINEER.

ASSEMBLED BY :	JML	DATE : 7/2012	
CHECKED BY :	JMR	DATE : 11/2012	
DRAWN BY : MAA 5/10		ADDED 5/6/10	
CHECKED BY : GM 5/10		REV. 10/1/11	MAA/GM
		REV. 12/5/11	MAA/GM

PROJECT NO. 17BP.14.R.59

CHEROKEE COUNTY

STATION: 12+43.84 -L-

SHEET 1 OF 1

NORTH CAROLINA PROFESSIONAL SEAL 18442 ENGINEER RICHARD LEON BOCKLINE JR. 3-17-2014

RS&H IMPROVING YOUR WORLD

RS&H Architects-Engineers-Planners, Inc.
8601 Six Forks Road, Suite 260
Raleigh, NC 27615
919-846-6701 FAX 919-846-8080
www.rsandh.com
North Carolina License Nos. 59073 * F-0495 * C-28

STATE OF NORTH CAROLINA
DEPARTMENT OF TRANSPORTATION
RALEIGH

STANDARD
GUARDRAIL ANCHORAGE FOR VERTICAL CONCRETE BARRIER RAIL

REVISIONS						SHEET NO.
NO.	BY:	DATE:	NO.	BY:	DATE:	S-7
1			3			TOTAL SHEETS
2			4			13

STD. NO. GRA3

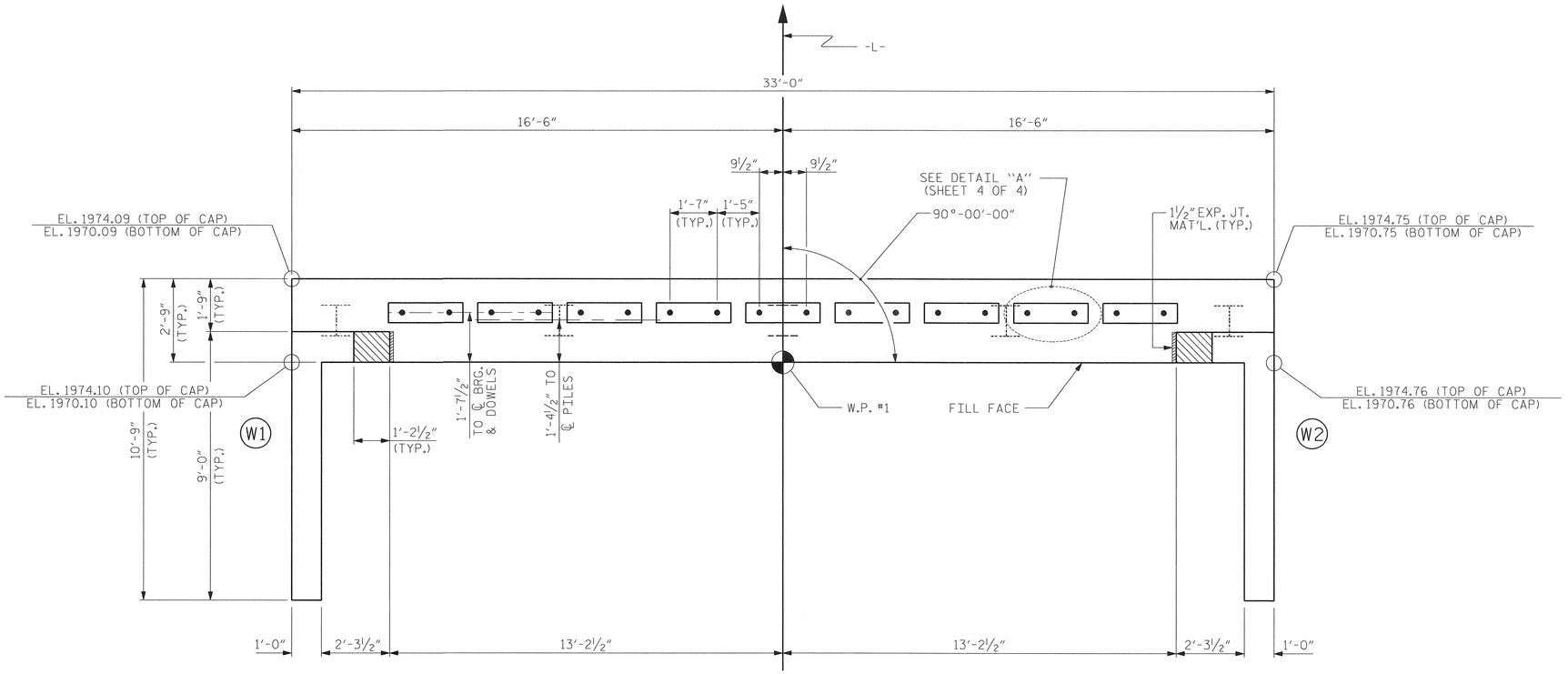

PLAN

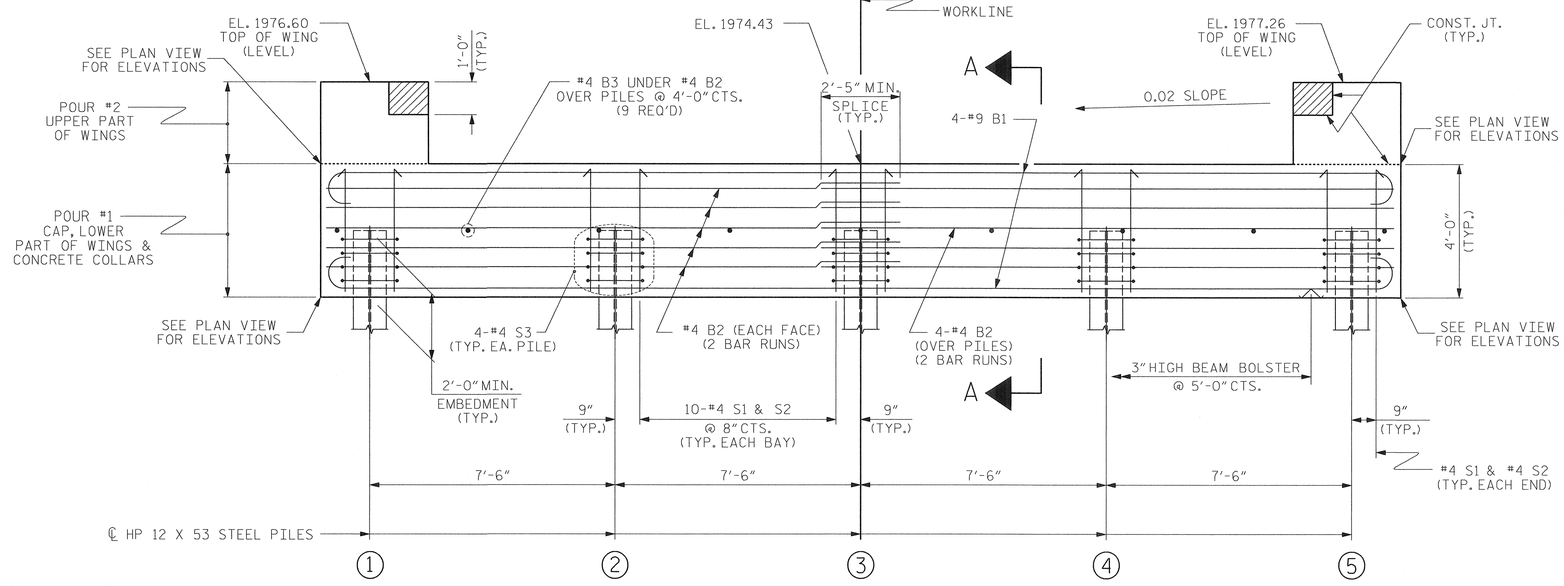

ELEVATION

WINGS NOT SHOWN FOR CLARITY.
FOR SECTION A-A, SEE SHEET 4 OF 4.
CONCRETE COLLARS FOR STEEL PILES NOT SHOWN IN PLAN AND ELEVATION VIEWS FOR CLARITY.
SEE "CORROSION PROTECTION FOR STEEL PILES DETAIL", SHEET 4 OF 4.

NOTES

STIRRUPS IN CAP MAY BE SHIFTED AS NECESSARY TO CLEAR DOWELS.

THE CONCRETE IN THE SHADED AREA OF THE WING SHALL BE POURED AFTER THE VERTICAL CONCRETE BARRIER RAIL IS CAST IF SLIP FORMING IS USED.

FOR PILE SPLICE DETAILS, SEE SHEET 4 OF 4.

FOR WING DETAILS, SEE SHEET 3 OF 4.

TOP OF PILE ELEVATIONS

1	1972.13
2	1972.28
3	1972.43
4	1972.58
5	1972.73

PROJECT NO. 17BP.14.R.59
CHEROKEE COUNTY
STATION: 12+43.84 -L-

SHEET 1 OF 4

ASSEMBLED BY :	JML	DATE : 7/2012	
CHECKED BY :	JMR	DATE : 11/2012	
DRAWN BY : DGE	02/10		
CHECKED BY : MKT	02/10		

NORTH CAROLINA PROFESSIONAL SEAL 18442 ENGINEER LEON BOLLINGER 3-17-2014

RS&H IMPROVING YOUR WORLD

RS&H Architects-Engineers-Planners, Inc.
8601 Six Forks Road, Suite 260
Raleigh, NC 27615
919-846-6791 FAX 919-846-9080
www.rsandh.com
North Carolina License Nos. 00073 * F-0493 * C-28

STATE OF NORTH CAROLINA
DEPARTMENT OF TRANSPORTATION
RALEIGH

SUBSTRUCTURE

END BENT No. 1

REVISIONS						SHEET NO.
NO.	BY:	DATE:	NO.	BY:	DATE:	S-8
1			3			TOTAL SHEETS
2			4			13

STD. NO. EB_27_90S4

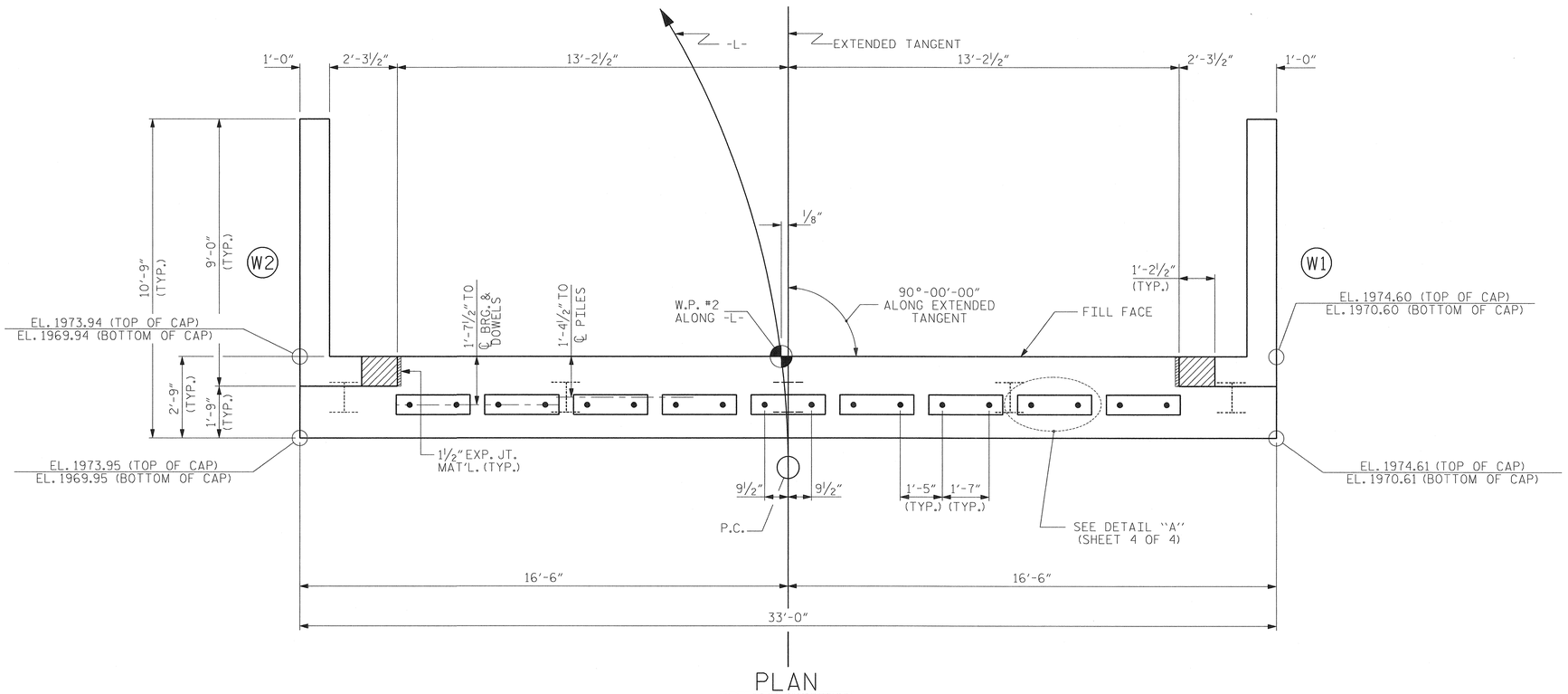

PLAN

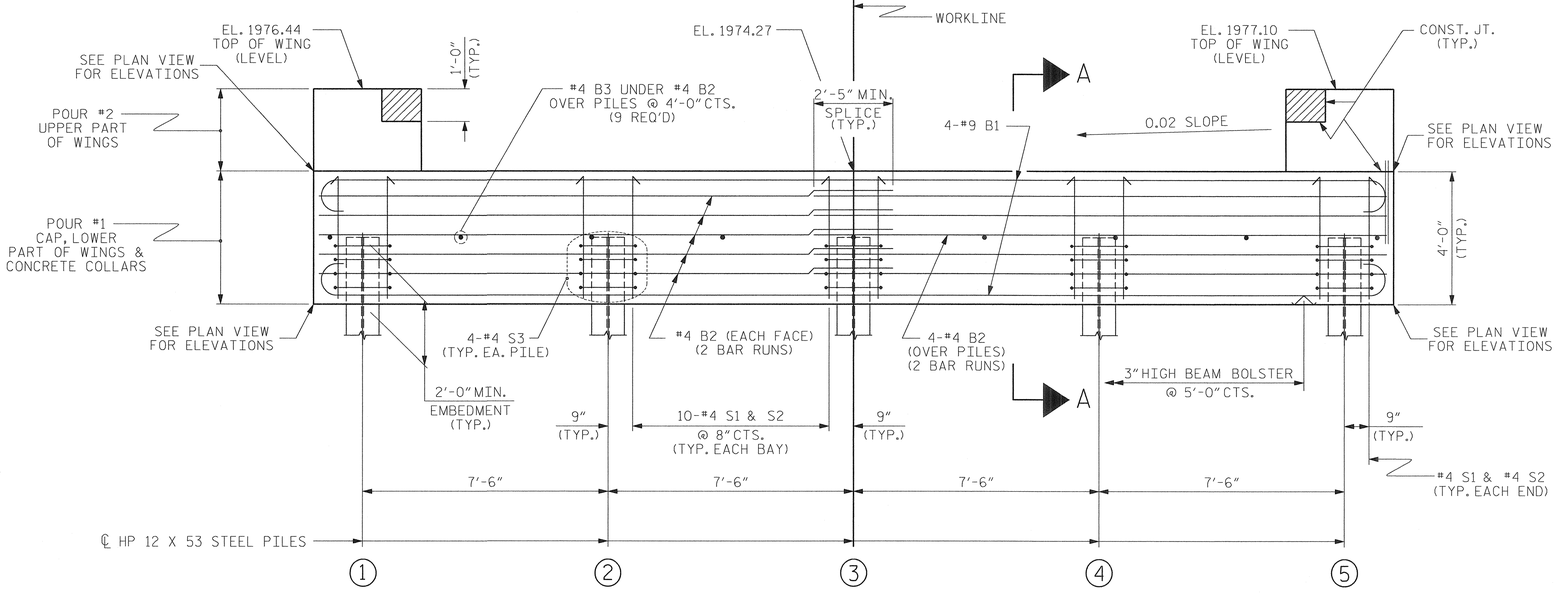

ELEVATION

WINGS NOT SHOWN FOR CLARITY.
FOR SECTION A-A, SEE SHEET 4 OF 4.
CONCRETE COLLARS FOR STEEL PILES NOT SHOWN IN PLAN AND ELEVATION VIEWS FOR CLARITY.
SEE "CORROSION PROTECTION FOR STEEL PILES DETAIL", SHEET 4 OF 4.

NOTES

STIRRUPS IN CAP MAY BE SHIFTED AS NECESSARY TO CLEAR DOWELS.

THE CONCRETE IN THE SHADED AREA OF THE WING SHALL BE POURED AFTER THE VERTICAL CONCRETE BARRIER RAIL IS CAST IF SLIP FORMING IS USED.

FOR PILE SPLICE DETAILS, SEE SHEET 4 OF 4.

FOR WING DETAILS, SEE SHEET 3 OF 4.

TOP OF PILE ELEVATIONS	
①	1971.97
②	1972.12
③	1972.27
④	1972.42
⑤	1972.57

PROJECT NO. 17BP.14.R.59
CHEROKEE COUNTY
STATION: 12+43.84 -L-
SHEET 2 OF 4

ASSEMBLED BY :	JML	DATE : 7/2012
CHECKED BY :	JMR	DATE : 11/2012
DRAWN BY : DGE	02/10	
CHECKED BY : MKT	02/10	

NORTH CAROLINA PROFESSIONAL SEAL 18442 ENGINEER RICHARD LEON BOLTON 3-17-2014
RS&H IMPROVING YOUR WORLD
RS&H Architects-Engineers-Planners, Inc.
8601 Six Forks Road, Suite 260
Raleigh, NC 27615
919-846-6701 FAX 919-846-9080
www.rsandh.com
North Carolina License Nos. 00073 * F-0493 * C-28

STATE OF NORTH CAROLINA
DEPARTMENT OF TRANSPORTATION
RALEIGH

SUBSTRUCTURE

END BENT No. 2

REVISIONS					
NO.	BY:	DATE:	NO.	BY:	DATE:
1			3		
2			4		

SHEET NO. S-9
TOTAL SHEETS 13

STD. NO. EB_27_90S4

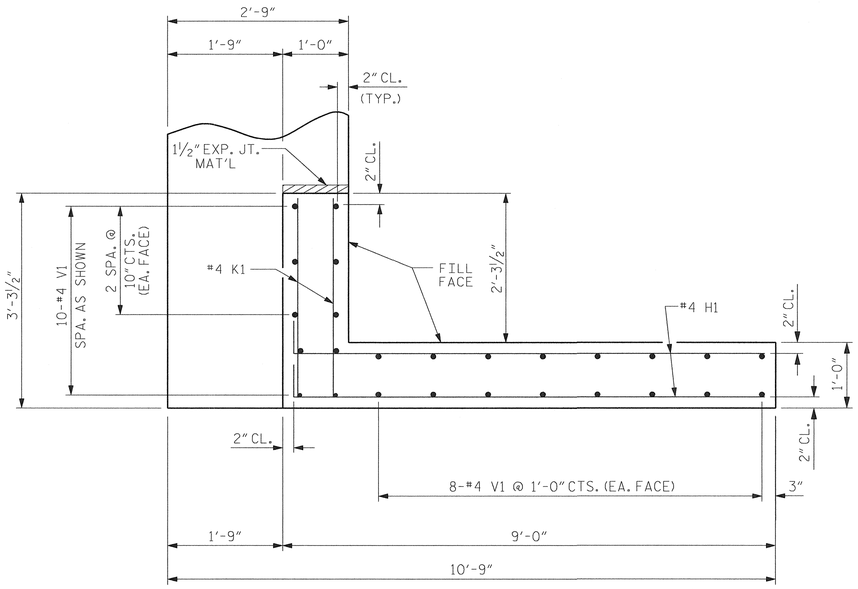

PLAN OF WING (W1)

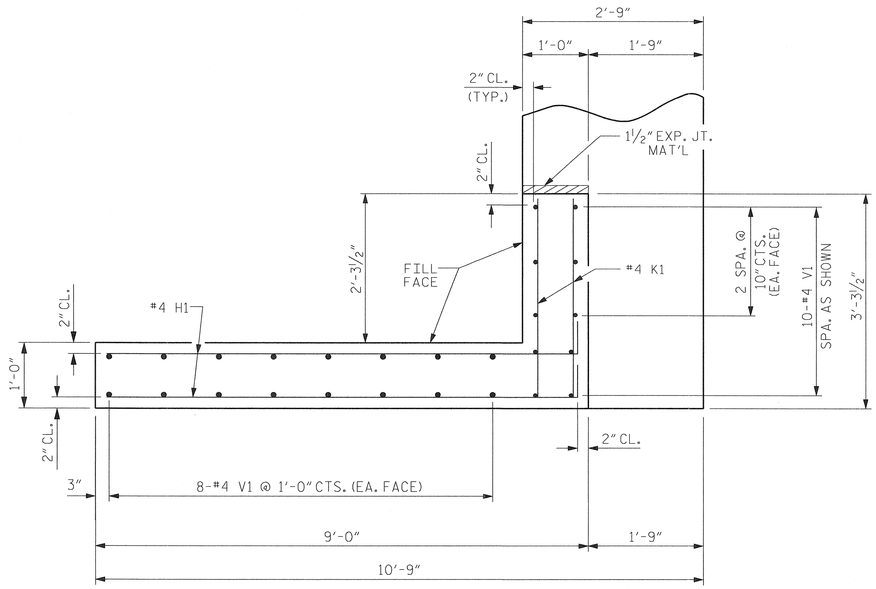

PLAN OF WING (W2)

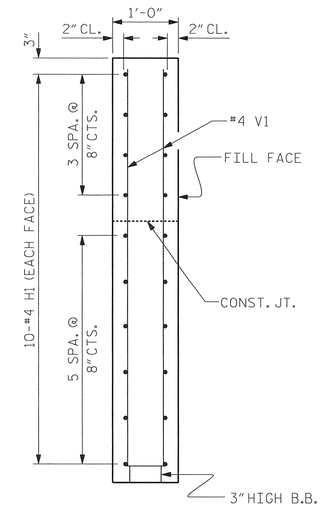

SECTION X-X

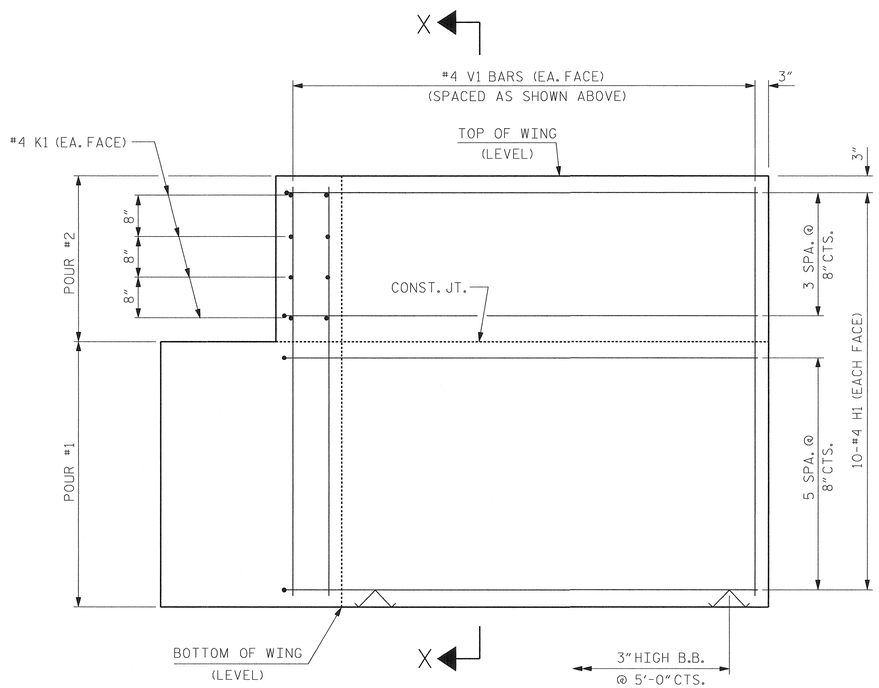

ELEVATION OF WING (W1)

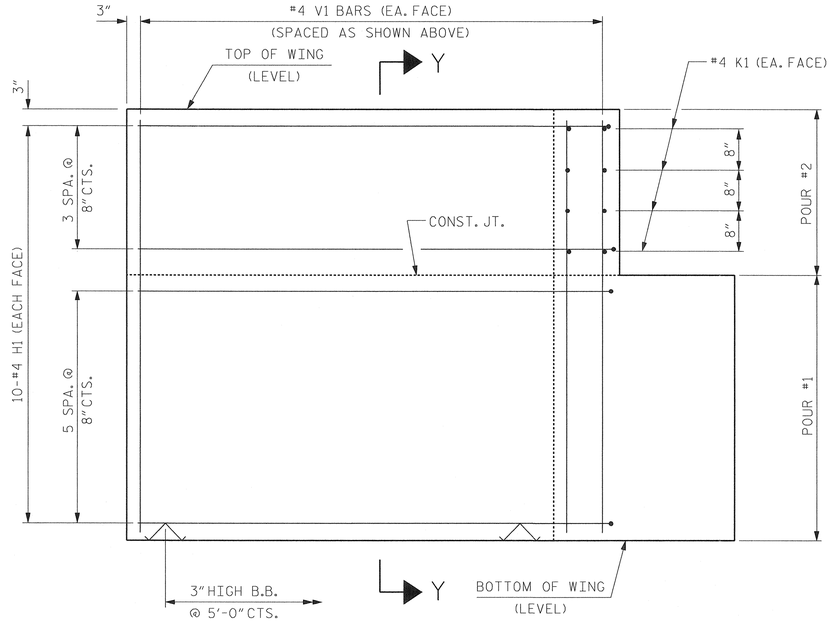

ELEVATION OF WING (W2)

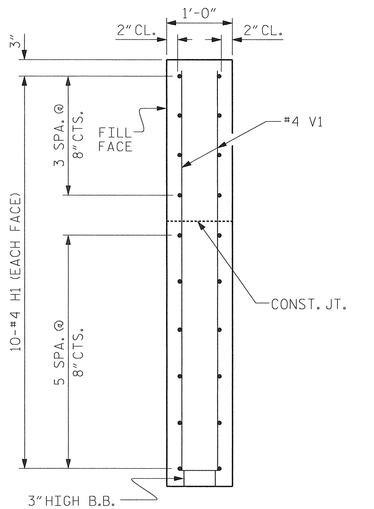

SECTION Y-Y

WING DETAILS

PROJECT NO. 17BP.14.R.59

CHEROKEE COUNTY

STATION: 12+43.84 -L-

SHEET 3 OF 4

ASSEMBLED BY :	JML	DATE : 7/2012	
CHECKED BY :	JMR	DATE : 11/2012	
DRAWN BY : DGE	02/10		
CHECKED BY : MKT	02/10		

NORTH CAROLINA PROFESSIONAL SEAL 18442 ENGINEER RICHARD LEON BOLLINGER JR.
3-17-2014

RS&H IMPROVING YOUR WORLD

RS&H Architects-Engineers-Planners, Inc.
8601 Six Forks Road, Suite 260
Raleigh, NC 27615
919-846-6701 FAX 919-846-9080
www.rsandh.com
North Carolina License Nos. 50073 * F-0403 * C-28

STATE OF NORTH CAROLINA
DEPARTMENT OF TRANSPORTATION
RALEIGH

SUBSTRUCTURE
END BENT
WING DETAILS

REVISIONS						SHEET NO.
NO.	BY:	DATE:	NO.	BY:	DATE:	S-10
1			3			TOTAL SHEETS
2			4			13

STD. NO. EB_27_90S4

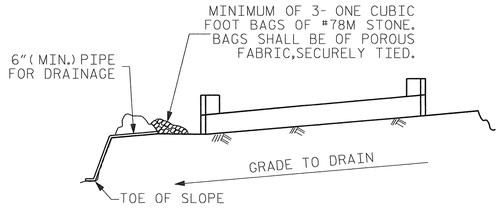

BAGGED STONE AND PIPE SHALL BE PLACED IMMEDIATELY AFTER COMPLETION OF END BENT EXCAVATION. PIPE MAY BE EITHER CONCRETE, CORRUGATED STEEL, CORRUGATED ALUMINUM ALLOY, OR CORRUGATED PLASTIC. PERFORATED PIPE WILL NOT BE ALLOWED.

BAGGED STONE SHALL REMAIN IN PLACE UNTIL THE ENGINEER DIRECTS THAT IT BE REMOVED. THE CONTRACTOR SHALL REMOVE AND DISPOSE OF SILT ACCUMULATIONS AT BAGGED STONE WHEN SO DIRECTED BY THE ENGINEER. BAGS SHALL BE REMOVED AND REPLACED WHENEVER THE ENGINEER DETERMINES THAT THEY HAVE DETERIORATED AND LOST THEIR EFFECTIVENESS.

NO SEPARATE PAYMENT WILL BE MADE FOR THIS WORK AND THE ENTIRE COST OF THIS WORK SHALL BE INCLUDED IN THE UNIT CONTRACT PRICE BID FOR THE SEVERAL PAY ITEMS.

TEMPORARY DRAINAGE AT END BENT

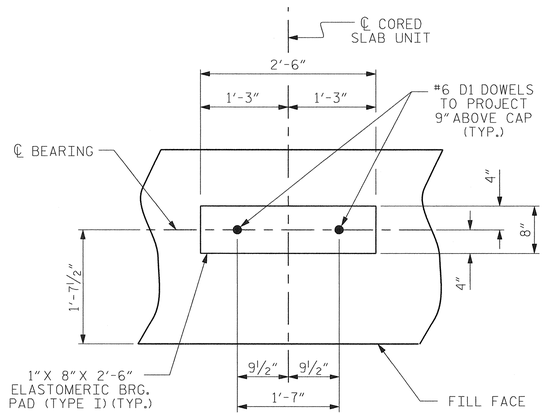

DETAIL "A"

(END BENT No. 1 SHOWN, END BENT No. 2 SIMILAR BY ROTATION)

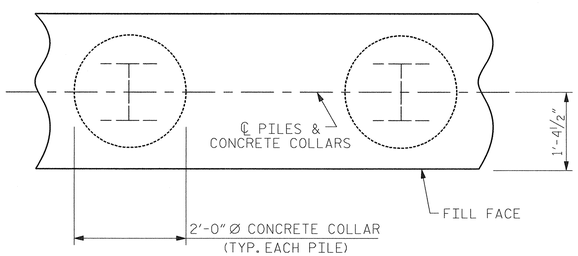

PLAN

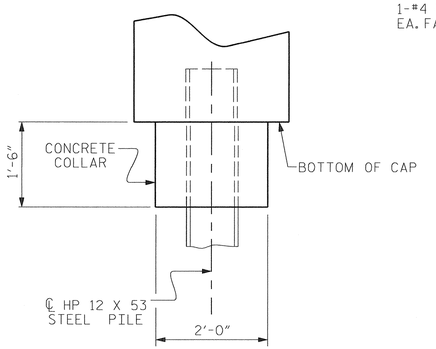

ELEVATION

CORROSION PROTECTION FOR STEEL PILES DETAIL

(END BENT No. 1 SHOWN, END BENT No. 2 SIMILAR BY ROTATION)

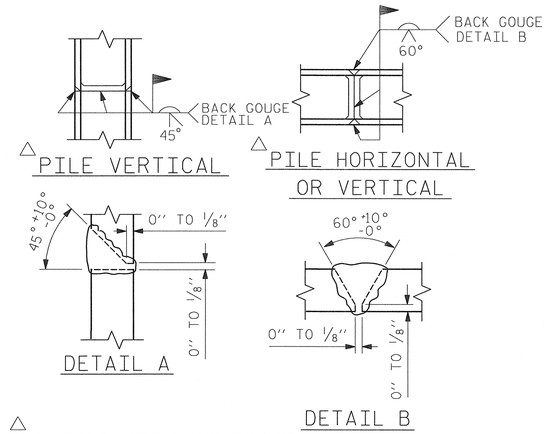

△ POSITION OF PILE DURING WELDING.

PILE SPLICE DETAILS

BAR TYPES

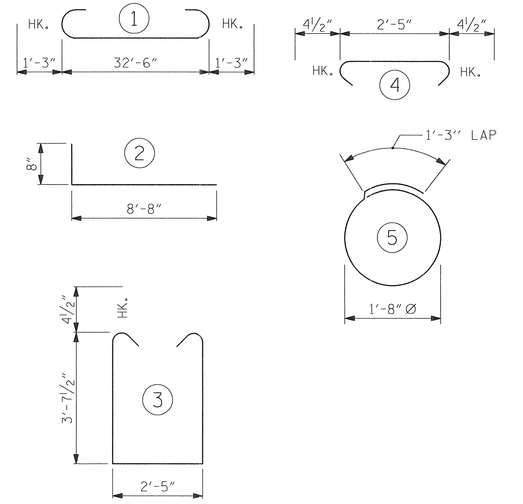

ALL BAR DIMENSIONS ARE OUT TO OUT.

END BENT No. 1	END BENT No. 2
HP 12 X 53 STEEL PILES	HP 12 X 53 STEEL PILES
NO: 5 LIN. FT.= 250	NO: 5 LIN. FT.= 175
STEEL PILE POINTS = 5	STEEL PILE POINTS = 5

BILL OF MATERIAL

FOR ONE END BENT

BAR	NO.	SIZE	TYPE	LENGTH	WEIGHT
B1	8	#9	1	35'-0"	952
B2	28	#4	STR	17'-7"	329
B3	9	#4	STR	2'-5"	15
D1	18	#6	STR	1'-6"	41
H1	40	#4	2	9'-4"	249
K1	16	#4	STR	2'-11"	31
S1	42	#4	3	10'-5"	292
S2	42	#4	4	3'-2"	89
S3	20	#4	5	6'-6"	87
V1	52	#4	STR	6'-6"	214

REINFORCING STEEL (FOR ONE END BENT) 2299 LBS.

CLASS A CONCRETE BREAKDOWN (FOR ONE END BENT)

POUR #1 CAP, LOWER PART OF WINGS & COLLARS 16.7 C.Y.

POUR #2 UPPER PART OF WINGS 2.1 C.Y.

TOTAL CLASS A CONCRETE 18.8 C.Y.

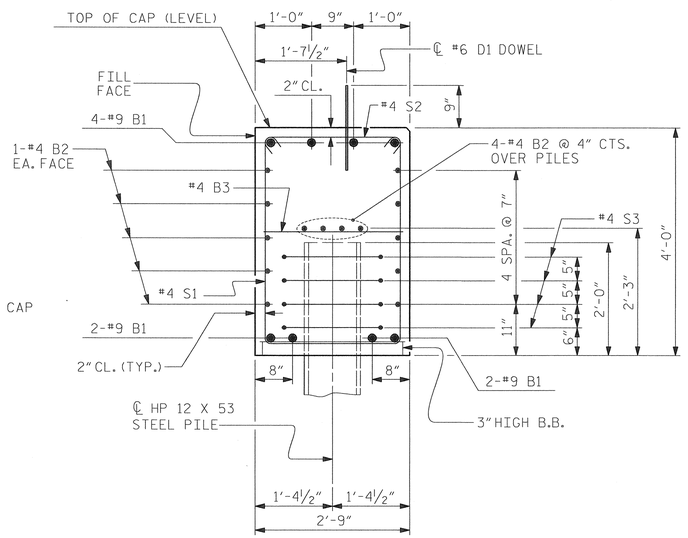

SECTION A-A

(CONCRETE COLLAR NOT SHOWN FOR CLARITY. SEE "CORROSION PROTECTION FOR STEEL PILES DETAIL.")

ASSEMBLED BY :	JML	DATE :	7/2012
CHECKED BY :	JMR	DATE :	11/2012
DRAWN BY : DGE	02/10		
CHECKED BY : MKT	02/10		

NORTH CAROLINA PROFESSIONAL SEAL 18442 ENGINEER LEON KIRKLAND MARTIN 3-17-2014

RS&H IMPROVING YOUR WORLD

RS&H Architects-Engineers-Planners, Inc.
8601 Six Forks Road, Suite 260
Raleigh, NC 27615
919-846-6701 FAX 919-846-9080
www.rsandh.com
North Carolina License Nos. 50073 * F-0493 * C-28

STATE OF NORTH CAROLINA
DEPARTMENT OF TRANSPORTATION
RALEIGH

SUBSTRUCTURE

END BENT No. 1 & 2 DETAILS

REVISIONS						SHEET NO.
NO.	BY:	DATE:	NO.	BY:	DATE:	S-11
1			3			TOTAL SHEETS
2			4			13

PROJECT NO. 17BP.14.R.59

CHEROKEE COUNTY

STATION: 12+43.84 -L-

SHEET 4 OF 4

STD. NO. EB_27_90S

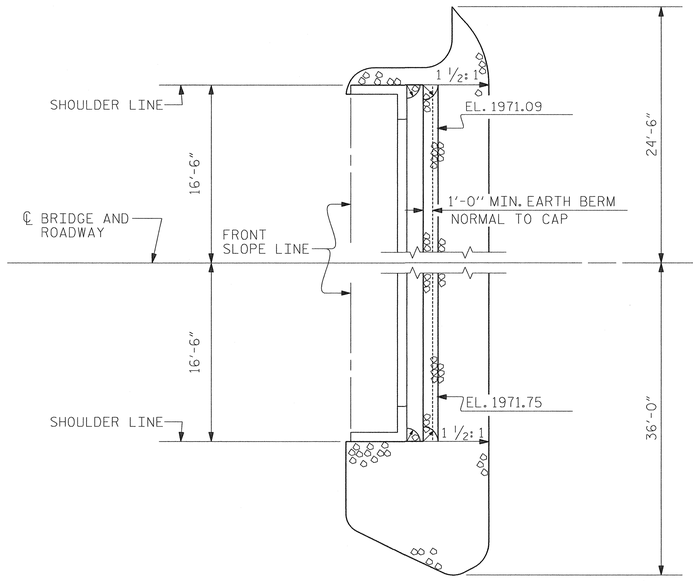

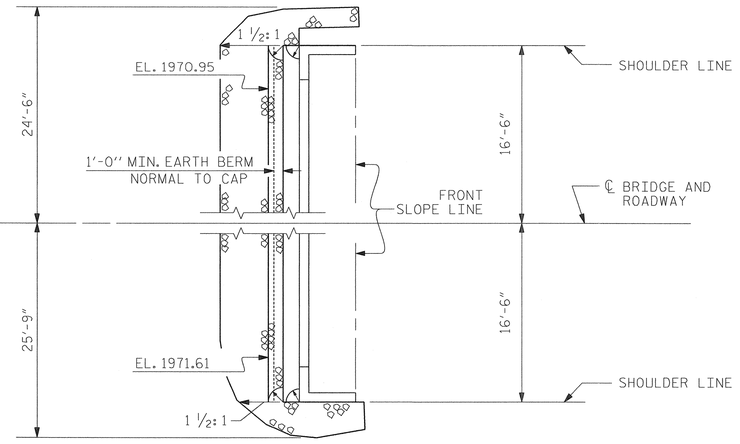

ESTIMATED QUANTITIES		
BRIDGE @ STA. 12+43.84 -L-	RIP RAP CLASS II (2'-0" THICK)	GEOTEXTILE FOR DRAINAGE
	TONS	SQUARE YARDS
END BENT 1	100	62
END BENT 2	70	50

END BENT 1

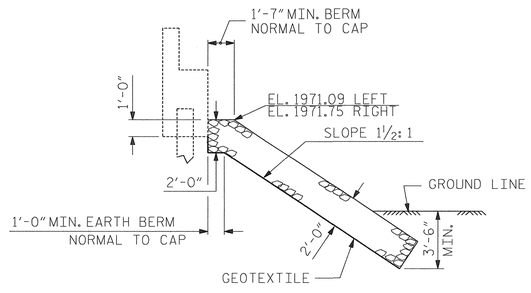

℄ SECTION

BERM RIP RAPPED

END BENT 2

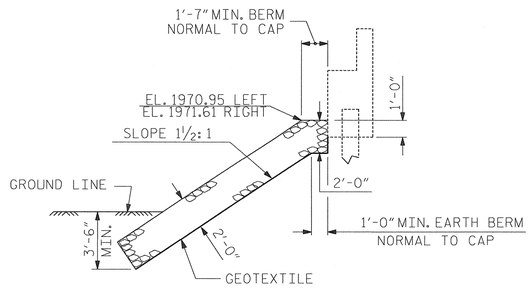

℄ SECTION

BERM RIP RAPPED

PROJECT NO. 17BP.14.R.59

CHEROKEE COUNTY

STATION: 12+43.84 -L-

SHEET 1 OF 1

NORTH CAROLINA PROFESSIONAL SEAL 18442 ENGINEER RICHARD DEAN MANN
3-17-2014

RS&H IMPROVING YOUR WORLD

RS&H Architects-Engineers-Planners, Inc.
8601 Six Forks Road, Suite 260
Raleigh, NC 27615
919-846-6701 FAX 919-846-9080
www.rsandh.com
North Carolina License Nos. 00073 * F-0493 * C-28

STATE OF NORTH CAROLINA
DEPARTMENT OF TRANSPORTATION
RALEIGH

STANDARD

RIP RAP DETAILS

ASSEMBLED BY :	JML	DATE : 7/2012
CHECKED BY :	JMR	DATE : 11/2012
DRAWN BY : REK 1/84	REV. 5/1/06R	TLA/GM
CHECKED BY : RDU 1/84	REV. 10/1/11	MAA/GM
	REV. 12/21/11	MAA/GM

REVISIONS						SHEET NO.
NO.	BY:	DATE:	NO.	BY:	DATE:	S-12
1			3			TOTAL SHEETS
2			4			13

STD. NO. RR1

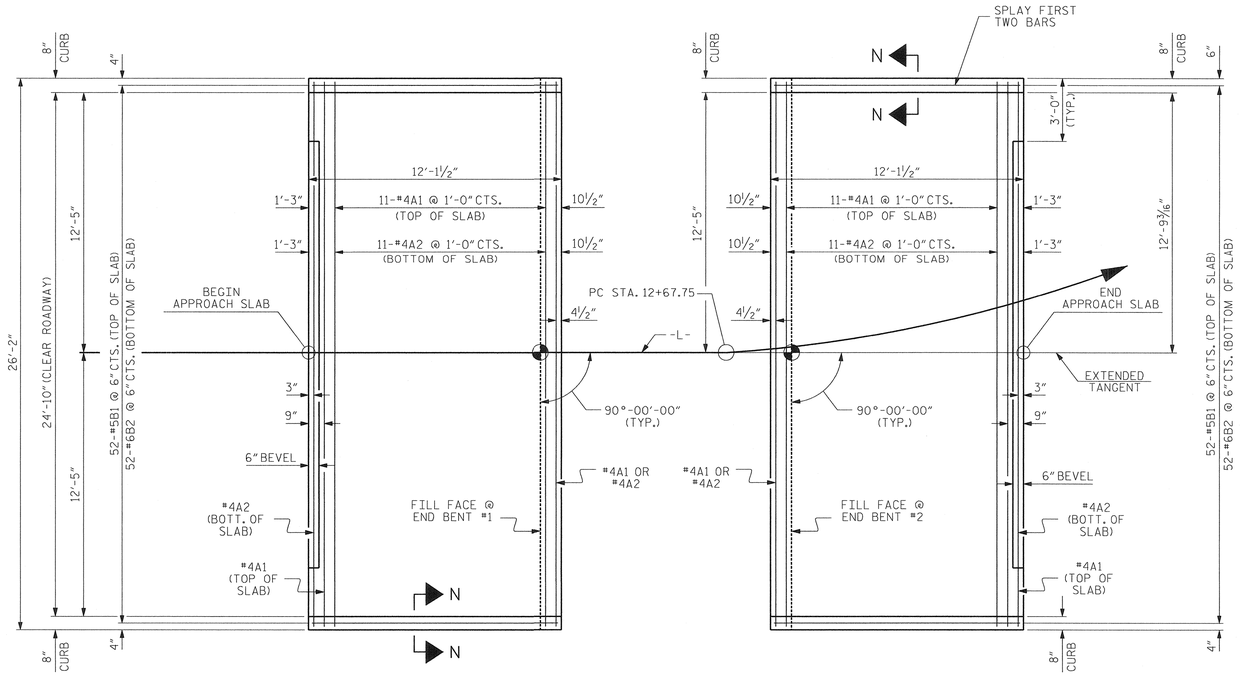

PLAN @ END BENT #1

PLAN @ END BENT #2

DIMENSIONS SHOWN ARE TYPICAL FOR BOTH APPROACH SLABS UNLESS NOTED OTHERWISE

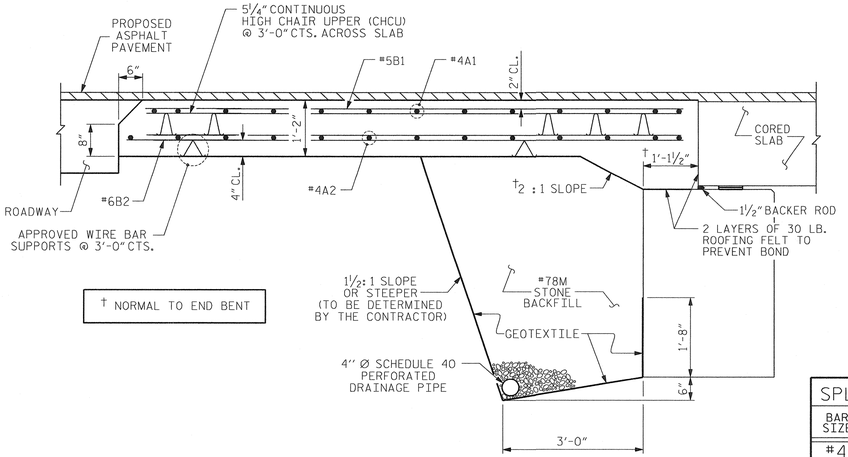

SECTION THRU SLAB

SPLICE LENGTHS		
BAR SIZE	EPOXY COATED	UNCOATED
#4	2'-0"	1'-9"
#5	2'-6"	2'-2"
#6	3'-10"	2'-7"

NOTES

FOR BRIDGE APPROACH FILL INCLUDING GEOTEXTILE, 4" Ø DRAINAGE PIPE, AND #78M STONE BACKFILL, SEE ROADWAY PLANS.

GEOTEXTILE SHALL BE TYPE 1IN ACCORDANCE WITH THE STANDARD SPECIFICATIONS SECTION 1056.

#78M STONE BACKFILL (CLASS V SELECT MATERIAL) SHALL BE IN ACCORDANCE WITH STANDARD SPECIFICATIONS SECTION 1016.

#78M STONE BACKFILL IS TO BE CONTINUOUS ALONG FILL FACE OF BACKWALL FROM OUTSIDE EDGE TO OUTSIDE EDGE OF APPROACH SLAB.

FOR THE 4" Ø DRAINAGE PIPE OUTLET(S), SEE ROADWAY STANDARD DRAWINGS.

AREA BETWEEN THE WINGWALL AND APPROACH SLAB SHALL BE GRADED TO DRAIN THE WATER AWAY FROM THE FILL FACE OF THE BRIDGE AND SHALL BE PAVED. SEE ROADWAY PLANS.

APPROACH SLAB GROOVING IS NOT REQUIRED.

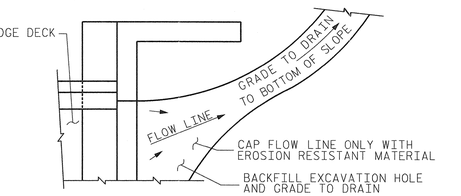

NOTE: IF THE APPROACH SLAB IS NOT CONSTRUCTED IMMEDIATELY AFTER THE BACKFILLING OF THE END BENT EXCAVATION, GRADE TO DRAIN TO THE BOTTOM OF THE SLOPE AND PROVIDE EROSION RESISTANT MATERIAL, SUCH AS FIBERGLASS ROVING OR AS DIRECTED BY THE ENGINEER TO PREVENT SOIL EROSION AND TO PROTECT THE AREA ADJACENT TO THE STRUCTURE. THE CONTRACTOR WILL BE REQUIRED TO REMOVE THESE MATERIALS PRIOR TO CONSTRUCTION OF THE APPROACH SLAB.

TEMPORARY DRAINAGE DETAIL

BILL OF MATERIAL

APPROACH SLAB AT EB #1

BAR	NO.	SIZE	TYPE	LENGTH	WEIGHT
* A1	13	#4	STR	25'-10"	224
A2	13	#4	STR	25'-10"	224
.	.	.	.	.	.
* B1	52	#5	STR	11'-2"	606
B2	52	#6	STR	11'-8"	911
REINFORCING STEEL				LBS.	1135
* EPOXY COATED . REINFORCING STEEL				LBS.	830
CLASS AA CONCRETE				C. Y.	15.2

APPROACH SLAB AT EB #2

BAR	NO.	SIZE	TYPE	LENGTH	WEIGHT
* A1	13	#4	STR	25'-10"	224
A2	13	#4	STR	25'-10"	224
.	.	.	.	.	.
* B1	52	#5	STR	11'-2"	606
B2	52	#6	STR	11'-8"	911
REINFORCING STEEL				LBS.	1135
* EPOXY COATED . REINFORCING STEEL				LBS.	830
CLASS AA CONCRETE				C. Y.	15.3

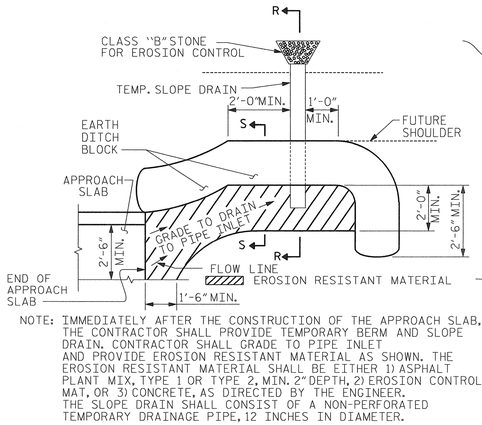

NOTE: IMMEDIATELY AFTER THE CONSTRUCTION OF THE APPROACH SLAB, THE CONTRACTOR SHALL PROVIDE TEMPORARY BERM AND SLOPE DRAIN. CONTRACTOR SHALL GRADE TO PIPE INLET AND PROVIDE EROSION RESISTANT MATERIAL AS SHOWN. THE EROSION RESISTANT MATERIAL SHALL BE EITHER 1) ASPHALT PLANT MIX, TYPE 1 OR TYPE 2, MIN. 2" DEPTH, 2) EROSION CONTROL MAT, OR 3) CONCRETE, AS DIRECTED BY THE ENGINEER. THE SLOPE DRAIN SHALL CONSIST OF A NON-PERFORATED TEMPORARY DRAINAGE PIPE, 12 INCHES IN DIAMETER.

PLAN VIEW

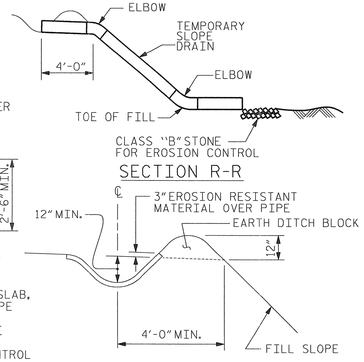

SECTION R-R

SECTION S-S

TEMPORARY BERM AND SLOPE DRAIN DETAILS

(TO BE USED WHEN SHOULDER BERM GUTTER IS REQUIRED)

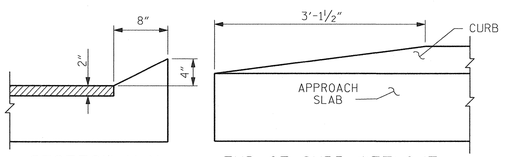

SECTION N-N

END OF CURB WITHOUT SHOULDER BERM GUTTER

CURB DETAILS

PROJECT NO. 17BP.14.R.59

CHEROKEE COUNTY

STATION: 12+43.84 -L-

SHEET 1 OF 1

NORTH CAROLINA PROFESSIONAL SEAL 18442 ENGINEER RICHARD A. BOLTON 3-17-2014

RS&H IMPROVING YOUR WORLD

RS&H Architects-Engineers-Planners, Inc.
8601 Six Forks Road, Suite 260
Raleigh, NC 27615
919-846-6701 FAX 919-846-9080
www.rsandh.com
North Carolina License Nos. 00073 * F-0493 * C-28

STATE OF NORTH CAROLINA
DEPARTMENT OF TRANSPORTATION
RALEIGH

STANDARD BRIDGE APPROACH SLAB FOR PRESTRESSED CONCRETE CORED SLAB UNIT (SUB-REGIONAL TIER) 90° SKEW

REVISIONS						SHEET NO.
NO.	BY:	DATE:	NO.	BY:	DATE:	S-13
1			3			TOTAL SHEETS
2			4			13

ASSEMBLED BY :	JML	DATE :	7/2012
CHECKED BY :	JMR	DATE :	11/2012
DRAWN BY : SHS/MAA	5-09	REV. 12-11	MAA/AAC
CHECKED BY : BCH	5-09		

STD. NO. BAS_27_90S

STANDARD NOTES

DESIGN DATA:

SPECIFICATIONS	A.A.S.H.T.O. (CURRENT)
LIVE LOAD	SEE PLANS
IMPACT ALLOWANCE	SEE A.A.S.H.T.O.
STRESS IN EXTREME FIBER OF	
STRUCTURAL STEEL - AASHTO M270 GRADE 36	20,000 LBS. PER SQ. IN.
- AASHTO M270 GRADE 50W	27,000 LBS. PER SQ. IN.
- AASHTO M270 GRADE 50	27,000 LBS. PER SQ. IN.
REINFORCING STEEL IN TENSION	
GRADE 60	24,000 LBS. PER SQ. IN.
CONCRETE IN COMPRESSION	1,200 LBS. PER SQ. IN.
CONCRETE IN SHEAR	SEE A.A.S.H.T.O.
STRUCTURAL TIMBER - TREATED OR	
UNTREATED - EXTREME FIBER STRESS	1,800 LBS. PER SQ. IN.
COMPRESSION PERPENDICULAR TO GRAIN OF TIMBER	375 LBS. PER SQ. IN.
EQUIVALENT FLUID PRESSURE OF EARTH	30 LBS. PER CU. FT. (MINIMUM)

MATERIAL AND WORKMANSHIP:

EXCEPT AS MAY OTHERWISE BE SPECIFIED ON PLANS OR IN THE SPECIAL PROVISIONS, ALL MATERIAL AND WORKMANSHIP SHALL BE IN ACCORDANCE WITH THE 2012 "STANDARD SPECIFICATIONS FOR ROADS AND STRUCTURES" OF THE N. C. DEPARTMENT OF TRANSPORTATION.

STEEL SHEET PILING FOR PERMANENT OR TEMPORARY APPLICATIONS SHALL BE HOT ROLLED.

CONCRETE:

UNLESS OTHERWISE REQUIRED ON PLANS, CLASS A CONCRETE SHALL BE USED FOR ALL PORTIONS OF ALL STRUCTURES WITH THE EXCEPTION THAT: CLASS AA CONCRETE SHALL BE USED IN BRIDGE SUPERSTRUCTURES, ABUTMENT BACKWALLS, AND APPROACH SLABS; AND CLASS B CONCRETE SHALL BE USED FOR SLOPE PROTECTION AND RIP RAP.

CONCRETE CHAMFERS:

UNLESS OTHERWISE NOTED ON THE PLANS, ALL EXPOSED CORNERS ON STRUCTURES SHALL BE CHAMFERED 3/4" WITH THE FOLLOWING EXCEPTIONS: TOP CORNERS OF CURBS MAY BE ROUNDED TO 1-1/2" RADIUS WHICH IS BUILT INTO CURB FORMS; CORNERS OF TRANSVERSE FLOOR EXPANSION JOINTS SHALL BE ROUNDED WITH A 1/4" FINISHING TOOL UNLESS OTHERWISE REQUIRED ON PLANS; AND CORNERS OF EXPANSION JOINTS IN THE ROADWAY FACES AND TOPS OF CURBS AND SIDEWALKS SHALL BE ROUNDED TO A 1/4" RADIUS WITH A FINISHING STONE OR TOOL UNLESS OTHERWISE REQUIRED ON PLANS.

DOWELS:

DOWELS WHEN INDICATED ON PLANS AS FOR CULVERT EXTENSIONS, SHALL BE EMBEDDED AT LEAST 12" INTO THE OLD CONCRETE AND GROUTED INTO PLACE WITH 1:2 CEMENT MORTAR.

ALLOWANCE FOR DEAD LOAD DEFLECTION, SETTLEMENT, ETC. IN CASTING SUPERSTRUCTURES:

BRIDGES SHALL BE BUILT ON THE GRADE OR VERTICAL CURVE SHOWN ON PLANS. SLABS, CURBS AND PARAPETS SHALL CONFORM TO THE GRADE OR CURVE.

ALL DIMENSIONS WHICH ARE GIVEN IN SECTION AND ARE AFFECTED BY DEAD LOAD DEFLECTIONS ARE DIMENSIONS AT CENTER LINE OF BEARING UNLESS OTHERWISE NOTED ON PLANS. IN SETTING FORMS FOR STEEL BEAM BRIDGES AND PRESTRESSED CONCRETE GIRDER BRIDGES, ADJUSTMENTS SHALL BE MADE DUE TO THE DEAD LOAD DEFLECTIONS FOR THE ELEVATIONS SHOWN. WHERE BLOCKS ARE SHOWN OVER BEAMS FOR BUILDING UP TO THE SLAB, THE VERTICAL DIMENSIONS OF THE BLOCKS SHALL BE ADJUSTED BETWEEN BEARINGS TO COMPENSATE FOR DEAD LOAD DEFLECTIONS, VERTICAL CURVE ORDINATE, AND ACTUAL BEAM CAMBER. WHERE BOTTOM OF SLAB IS IN LINE WITH BOTTOM OF TOP FLANGES, DEPTH OF SLAB BETWEEN BEARINGS SHALL BE ADJUSTED TO COMPENSATE FOR DEAD LOAD DEFLECTION, VERTICAL CURVE ORDINATE, AND ACTUAL BEAM CAMBER.

IN SETTING FALSEWORK AND FORMS FOR REINFORCED CONCRETE SPANS, AN ALLOWANCE SHALL BE MADE FOR DEAD LOAD DEFLECTIONS, SETTLEMENT OF FALSEWORK, AND PERMANENT CAMBER WHICH SHALL BE PROVIDED FOR IN ADDITION TO THE ELEVATIONS SHOWN. AFTER REMOVAL OF THE FALSEWORK, THE FINISHED STRUCTURES SHALL CONFORM TO THE PROFILE AND ELEVATIONS SHOWN ON THE PLANS AND CONSTRUCTION ELEVATIONS FURNISHED BY THE ENGINEER.

DETAILED DRAWINGS FOR FALSEWORK OR FORMS FOR BRIDGE SUPERSTRUCTURE AND ANY STRUCTURE OR PARTS OF A STRUCTURE AS NOTED ON THE PLANS SHALL BE SUBMITTED TO THE ENGINEER FOR APPROVAL BEFORE CONSTRUCTION OF THE FALSEWORK OR FORMS IS STARTED.

REINFORCING STEEL:

ALL REINFORCING STEEL SHALL BE DEFORMED. DIMENSIONS RELATIVE TO PLACEMENT OF REINFORCING ARE TO CENTERS OF BARS UNLESS OTHERWISE INDICATED IN THE PLANS. DIMENSIONS ON BAR DETAILS ARE TO CENTERS OF BARS OR ARE OUT TO OUT AS INDICATED ON PLANS.

WIRE BAR SUPPORTS SHALL BE PROVIDED FOR REINFORCING STEEL WHERE INDICATED ON THE PLANS. WHEN BAR SUPPORT PIECES ARE PLACED IN CONTINUOUS LINES, THEY SHALL BE SO PLACED THAT THE ENDS OF THE SUPPORTING WIRES SHALL BE LAPPED TO LOCK LEGS ON ADJOINING PIECES.

STRUCTURAL STEEL:

AT THE CONTRACTOR'S OPTION, HE MAY SUBSTITUTE 7/8" Ø SHEAR STUDS FOR THE 3/4" Ø STUDS SPECIFIED ON THE PLANS. THIS SUBSTITUTION SHALL BE MADE AT THE RATE OF 3 - 7/8" Ø STUDS FOR 4 - 3/4" Ø STUDS, AND STUD SPACING CHANGES SHALL BE MADE AS NECESSARY TO PROVIDE THE SAME EQUIVALENT NUMBER OF 7/8" Ø STUDS ALONG THE BEAM AS SHOWN FOR 3/4" Ø STUDS BASED ON THE RATIO OF 3 - 7/8" Ø STUDS FOR 4 - 3/4" Ø STUDS. STUDS OF THE LENGTH SPECIFIED ON THE PLANS MUST BE PROVIDED. THE MAXIMUM SPACING SHALL BE 2'-0".

EXCEPT AT THE INTERIOR SUPPORTS OF CONTINUOUS BEAMS WHERE THE COVER PLATE IS IN CONTACT WITH BEARING PLATE, THE CONTRACTOR MAY, AT HIS OPTION, SUBSTITUTE FOR THE COVER PLATES DESIGNATED ON THE PLANS COVER PLATES OF THE EQUIVALENT AREA PROVIDED THESE PLATES ARE AT LEAST 5/16" IN THICKNESS AND DO NOT EXCEED A WIDTH EQUAL TO THE FLANGE WIDTH LESS 2" OR A THICKNESS EQUAL TO 2 TIMES THE FLANGE THICKNESS. THE SIZE OF FILLET WELDS SHALL CONFORM TO THE REQUIREMENTS OF THE CURRENT ANSI/AASHTO/AWS "BRIDGE WELDING CODE". ELECTROSLAG WELDING WILL NOT BE PERMITTED.

WITH THE SOLE EXCEPTION OF EDGES AT SURFACES WHICH BEAR ON OTHER SURFACES, ALL SHARP EDGES AND ENDS OF SHAPES AND PLATES SHALL BE SLIGHTLY ROUNDED BY SUITABLE MEANS TO A RADIUS OF APPROXIMATELY 1/16 INCH OR EQUIVALENT FLAT SURFACE AT A SUITABLE ANGLE PRIOR TO PAINTING, GALVANIZING, OR METALLIZING.

HANDRAILS AND POSTS:

METAL STANDARDS AND FACES OF THE CONCRETE END POSTS FOR THE METAL RAIL SHALL BE SET NORMAL TO THE GRADE OF THE CURB, UNLESS OTHERWISE SHOWN ON PLANS. THE METAL RAIL AND TOPS OF CONCRETE POSTS USED WITH THE ALUMINUM RAIL SHALL BE BUILT PARALLEL TO THE GRADE OF THE CURB.

METAL HANDRAILS SHALL BE IN ACCORDANCE WITH THE PLANS. RAILS SHALL BE AS MANUFACTURED FOR BRIDGE RAILING. CASTINGS SHALL BE OF A UNIFORM APPEARANCE. FINS AND OTHER DEFORMATIONS RESULTING FROM CASTING OR OTHERWISE SHALL BE REMOVED IN A MANNER SO THAT A UNIFORM COLORING OF THE COMPLETED CASTING SHALL BE OBTAINED. CASTINGS WITH DISCOLORATIONS OR OF NON-UNIFORM COLORING WILL NOT BE ACCEPTED. CERTIFIED MILL REPORTS ARE REQUIRED FOR METAL RAILS AND POSTS.

SPECIAL NOTES:

GENERALLY, IN CASE OF DISCREPANCY, THIS STANDARD SHEET OF NOTES SHALL GOVERN OVER THE SPECIFICATIONS, BUT THE REMAINDER OF THE PLANS SHALL GOVERN OVER NOTES HEREON, AND SPECIAL PROVISIONS SHALL GOVERN OVER ALL. SEE SPECIFICATIONS ARTICLE 105-4.

ENGLISH

JANUARY, 1990