**This electronic collection of documents is provided for the convenience of the user and is Not a Certified Document –**

**The documents contained herein were originally issued and sealed by the individuals whose names and license numbers appear on each page, on the dates appearing with their signature on that page.**
**This file or an individual page shall not be considered a certified document.**

| STATE | STATE PROJECT REFERENCE NO. | SHEET NO. | TOTAL SHEETS |
|---|---|---|---|
| N.C. | W-5601DU | 1 | |

| TIP NO. | WBS NO | DESCRIPTION |
|---|---|---|
| W-5601DU | 50138.1 | |

STATE OF NORTH CAROLINA
DIVISION OF HIGHWAYS

# TRANSYLVANIA COUNTY

## LOCATION: US 276 FROM SOUTH CAROLINA STATE LINE TO SR1118 GALLIMORE ROAD

## TYPE OF WORK: GUARDRAIL INSTALLATION, RETAINING WALL, GRADING, DRAINAGE, EROSION CONTROL AND TRAFFIC CONTROL

TIP PROJECT: W-5601DU

CONTRACT: DN00552

5/23/2017

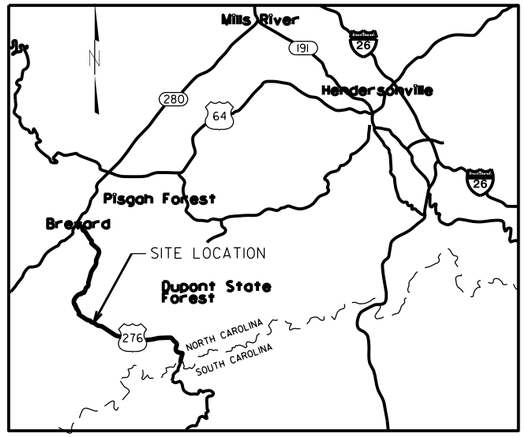


HWY 276 VICINITY MAP
NOT TO SCALE

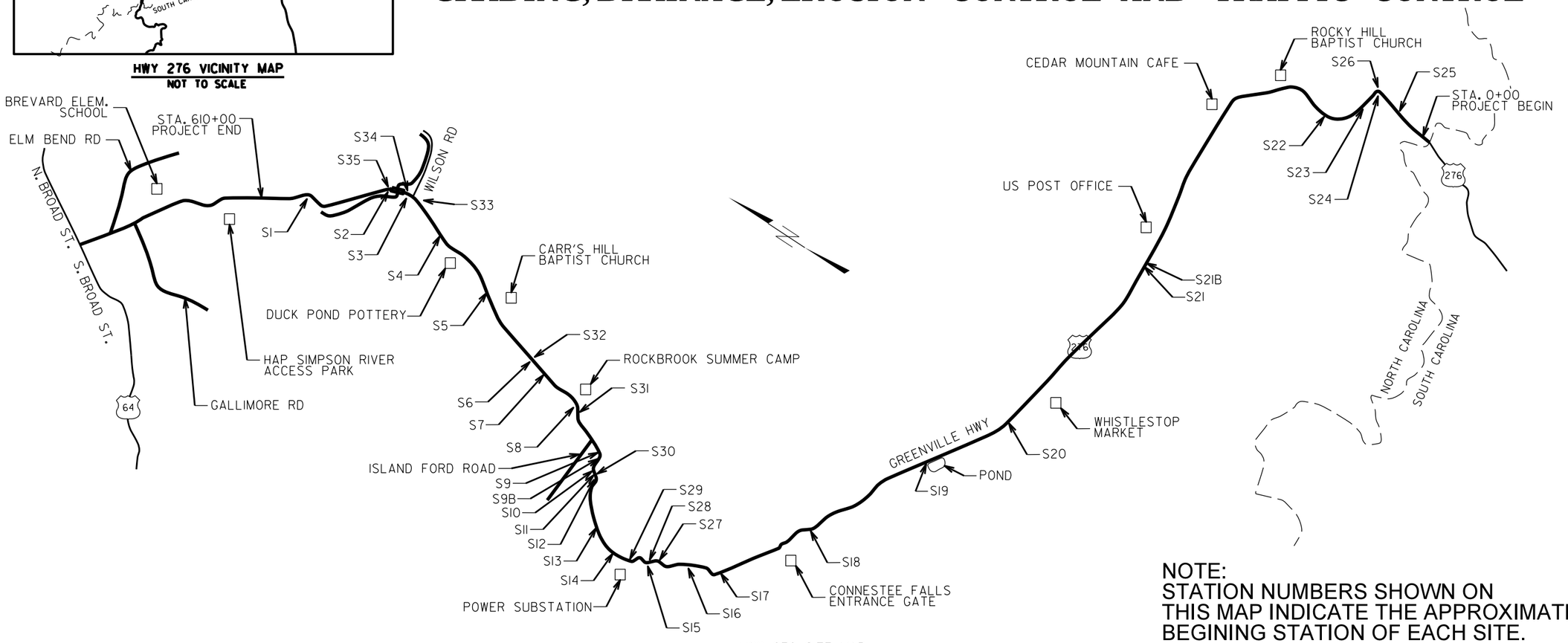


HWY 276 SITE MAP
NOT TO SCALE

NOTE:
STATION NUMBERS SHOWN ON THIS MAP INDICATE THE APPROXIMATE BEGINING STATION OF EACH SITE.

**PROJECT LENGTH**

W-5601DU (11.55 MILES)

Prepared in the Office of:
**DIVISION OF HIGHWAYS**
1000 Birch Ridge Dr., Raleigh NC, 27610

2012 STANDARD SPECIFICATIONS

RIGHT OF WAY DATE:

LETTING DATE:

S.L. Cannon, PE
PROJECT ENGINEER

R.C. Chambard
PROJECT DESIGN ENGINEER

HYDRAULICS ENGINEER
SIGNATURE: P.E.

ROADWAY DESIGN ENGINEER
SIGNATURE: P.E.

STATE OF NORTH CAROLINA • DEPARTMENT OF TRANSPORTATION

| PROJECT REFERENCE NO. | SHEET NO. |
|---|---|
| W-5601DU | 1A |

# INDEX OF SHEETS

| SHEET NUMBER: | SHEET: |
|---|---|
| 1 | TITLE SHEET |
| 1A | INDEX OF SHEETS |
| 1B | CONVENTIONAL SYMBOLS |
| 2C–1 thru 2C–27 | STANDARD DRAWINGS 862.01, 862.02, 862.03 |
| 3B–1 thru 3B–3 | GUARDRAIL & EARTHWORK SUMMARY SHEETS |
| 4 | SITE 1 |
| 5 | SITE 2 |
| 6 | SITE 3 |
| 7 | SITE 4 |
| 7–A thru 7–C | DETAIL SITE 4 |
| 8 | SITE 5 |
| 9 | SITE 6 |
| 10 | SITE 7 |
| 11 | SITE 8 |
| 12 | SITE 9 |
| 13 | SITE 9–B |
| 14 | SITE 10 |
| 15 | SITE 11 |
| 16 | SITE 12 |
| 17 | SITE 13 |
| 18 | SITE 14 |
| 19 | SITE 15 |
| 20 | SITE 16 |
| 21 | SITE 17 |
| 22 | SITE 18 |
| 23 | SITE 19 |
| 24 | SITE 20 |
| 25 | SITE 21 |
| 25–A thru 25–B | DETAIL SITE 21 |
| 26 | SITE 21–B |
| 26–A | DETAIL SITE 21–B |
| 27 | SITE 22 |
| 28 | SITE 23 |
| 29 | SITE 24 |
| 30 | SITE 25 |
| 31 | SITE 26 |
| 32 | SITE 27 |
| 33 | SITE 28 |
| 34 | SITE 29 |
| 34–A | DETAIL SITE 29 |
| 35 | SITE 30 |
| 36 | SITE 31 |
| 37 | SITE 32 |
| 38 | SITE 33 |
| 39 | SITE 34 |
| 40 | SITE 35 |
| X–1 thru X–7 | SITE 4 CROSS SECTIONS |
| X–8 thru X–12 | SITE 21 CROSS SECTIONS |
| X13 thru X–20 | SITE 21B CROSS SECTIONS |

## GENERAL NOTES:

CLEARING ON THIS PROJECT SHALL BE PERFORMED TO THE LIMITS ESTABLISHED BY METHOD II.

THE GUARDRAIL LOCATIONS SHOWN ON THE PLANS MAY BE ADJUSTED DURING CONSTRUCTION AS DIRECTED BY THE ENGINEER. THE CONTRACTOR SHOULD CONSULT WITH THE ENGINEER PRIOR TO ORDERING GUARDRAIL MATERIAL.

NO SUBSURFACE PLANS ARE AVAILABLE ON THIS PROJECT. THE CONTRACTOR SHOULD MAKE HIS OWN INVESTIGATION AS TO THE SUBSURFACE CONDITIONS.

EACH OF THE GUARDRAIL SITES LISTED IN THESE PLANS HAVE BEEN IDENTIFIED AND MARKED IN THE FIELD PRIOR TO THE LET OF THIS CONTRACT.

MARKINGS OF EACH SITE INCLUDE "WHITE" PAINT ON THE PAVEMENT INDICATING THE STATION AND THE END UNIT TYPE, & 4 FOOT STAKE WITH SITE NUMBER.

ALL THE STANDARD DRAWINGS LISTED IN THIS CONTRACT, MAY OR MAY NOT BE APPLICABLE.

DETAIL SITE SHEETS DENOTE ADDITIONAL CONSTRUCTION OUTSIDE OF GUARDRAIL PLACEMENT.

REVISIONS HAVE BEEN MADE TO THE STANDARD DRAWINGS TO INCLUDE THE USE OF 31" MASH COMPLIANT GUARDRAIL PLACEMENT (862.01, 862.02, 862.03, 862.04)

UTILITY OWNERS ON THIS PROJECT ARE:

CITIZENS TELEPHONE COMPANY (COMPORIUM) (828–553–9599), PSNC ENERGY (877–776–2427),

DUKE ENERGY (800–769–3766),

ANY RELOCATION OF EXISTING UTILITIES WILL BE ACCOMPLISHED BY OTHERS.

2012 ROADWAY ENGLISH STANDARD DRAWINGS

EFF. 01–17–2012
REV. 10–30–2012

The following Roadway Standards as appear in "Roadway Standard Drawings" Highway Design Branch – N. C. Department of Transportation – Raleigh, N. C., Dated January, 2012 are applicable to this project and by reference hereby are considered a part of these plans:

| STD.NO. | TITLE |
|---|---|
| **DIVISION 2 – EARTHWORK** | |
| 200.02 | Method of Clearing – Method II |
| **DIVISION 3 – PIPE CULVERTS** | |
| 300.01 | Method of Pipe Installation |
| **DIVISION 8 – INCIDENTALS** | |
| 840.72 | Pipe Collar |
| 850.01 | Concrete Paved Ditches |
| 862.01 | Guardrail Placement |
| 862.02 | Guardrail Installation |
| 862.04 | Anchoring End of Guardrail – B–77 and B–83 Anchor Units |
| 1605.01 | Temporary Silt Fence |

| PROJECT REFERENCE NO. | SHEET NO. |
|---|---|
| W-5601DU | 1B |

STATE OF NORTH CAROLINA, DIVISION OF HIGHWAYS

# CONVENTIONAL PLAN SHEET SYMBOLS

*Note: Not to Scale* **S.U.E. = Subsurface Utility Engineering*

## *BOUNDARIES AND PROPERTY:*

- State Line
- County Line
- Township Line
- City Line
- Reservation Line
- Property Line
- Existing Iron Pin
- Computed Property Corner
- Property Monument
- Parcel/Sequence Number
- Existing Fence Line
- Proposed Woven Wire Fence
- Proposed Chain Link Fence
- Proposed Barbed Wire Fence
- Existing Wetland Boundary
- Proposed Wetland Boundary
- Existing Endangered Animal Boundary
- Existing Endangered Plant Boundary
- Existing Historic Property Boundary
- Known Contamination Area: Soil
- Potential Contamination Area: Soil
- Known Contamination Area: Water
- Potential Contamination Area: Water
- Contaminated Site: Known or Potential

## *BUILDINGS AND OTHER CULTURE:*

- Gas Pump Vent or U/G Tank Cap
- Sign
- Well
- Small Mine
- Foundation
- Area Outline
- Cemetery
- Building
- School
- Church
- Dam

## *HYDROLOGY:*

- Stream or Body of Water
- Hydro, Pool or Reservoir
- Jurisdictional Stream
- Buffer Zone 1
- Buffer Zone 2
- Flow Arrow
- Disappearing Stream
- Spring
- Wetland
- Proposed Lateral, Tail, Head Ditch
- False Sump

## *RAILROADS:*

- Standard Gauge
- RR Signal Milepost
- Switch
- RR Abandoned
- RR Dismantled

## *RIGHT OF WAY & PROJECT CONTROL:*

- Secondary Horiz and Vert Control Point
- Primary Horiz Control Point
- Primary Horiz and Vert Control Point
- Exist Permanent Easment Pin and Cap
- New Permanent Easement Pin and Cap
- Vertical Benchmark
- Existing Right of Way Marker
- Existing Right of Way Line
- New Right of Way Line
- New Right of Way Line with Pin and Cap
- New Right of Way Line with Concrete or Granite R/W Marker
- New Control of Access Line with Concrete C/A Marker
- Existing Control of Access
- New Control of Access
- Existing Easement Line
- New Temporary Construction Easement
- New Temporary Drainage Easement
- New Permanent Drainage Easement
- New Permanent Drainage / Utility Easement
- New Permanent Utility Easement
- New Temporary Utility Easement
- New Aerial Utility Easement

## *ROADS AND RELATED FEATURES:*

- Existing Edge of Pavement
- Existing Curb
- Proposed Slope Stakes Cut
- Proposed Slope Stakes Fill
- Proposed Curb Ramp
- Existing Metal Guardrail
- Proposed Guardrail
- Existing Cable Guiderail
- Proposed Cable Guiderail
- Equality Symbol
- Pavement Removal

## *VEGETATION:*

- Single Tree
- Single Shrub
- Hedge
- Woods Line
- Orchard
- Vineyard

## *EXISTING STRUCTURES:*

MAJOR:

- Bridge, Tunnel or Box Culvert
- Bridge Wing Wall, Head Wall and End Wall

MINOR:

- Head and End Wall
- Pipe Culvert
- Footbridge
- Drainage Box: Catch Basin, DI or JB
- Paved Ditch Gutter
- Storm Sewer Manhole
- Storm Sewer

## *UTILITIES:*

POWER:

- Existing Power Pole
- Proposed Power Pole
- Existing Joint Use Pole
- Proposed Joint Use Pole
- Power Manhole
- Power Line Tower
- Power Transformer
- U/G Power Cable Hand Hole
- H-Frame Pole
- U/G Power Line LOS B (S.U.E.*)
- U/G Power Line LOS C (S.U.E.*)
- U/G Power Line LOS D (S.U.E.*)

TELEPHONE:

- Existing Telephone Pole
- Proposed Telephone Pole
- Telephone Manhole
- Telephone Pedestal
- Telephone Cell Tower
- U/G Telephone Cable Hand Hole
- U/G Telephone Cable LOS B (S.U.E.*)
- U/G Telephone Cable LOS C (S.U.E.*)
- U/G Telephone Cable LOS D (S.U.E.*)
- U/G Telephone Conduit LOS B (S.U.E.*)
- U/G Telephone Conduit LOS C (S.U.E.*)
- U/G Telephone Conduit LOS D (S.U.E.*)
- U/G Fiber Optics Cable LOS B (S.U.E.*)
- U/G Fiber Optics Cable LOS C (S.U.E.*)
- U/G Fiber Optics Cable LOS D (S.U.E.*)

WATER:

- Water Manhole
- Water Meter
- Water Valve
- Water Hydrant
- U/G Water Line LOS B (S.U.E*)
- U/G Water Line LOS C (S.U.E*)
- U/G Water Line LOS D (S.U.E*)
- Above Ground Water Line

TV:

- TV Pedestal
- TV Tower
- U/G TV Cable Hand Hole
- U/G TV Cable LOS B (S.U.E.*)
- U/G TV Cable LOS C (S.U.E.*)
- U/G TV Cable LOS D (S.U.E.*)
- U/G Fiber Optic Cable LOS B (S.U.E.*)
- U/G Fiber Optic Cable LOS C (S.U.E.*)
- U/G Fiber Optic Cable LOS D (S.U.E.*)

GAS:

- Gas Valve
- Gas Meter
- U/G Gas Line LOS B (S.U.E.*)
- U/G Gas Line LOS C (S.U.E.*)
- U/G Gas Line LOS D (S.U.E.*)
- Above Ground Gas Line

SANITARY SEWER:

- Sanitary Sewer Manhole
- Sanitary Sewer Cleanout
- U/G Sanitary Sewer Line
- Above Ground Sanitary Sewer
- SS Forced Main Line LOS B (S.U.E.*)
- SS Forced Main Line LOS C (S.U.E.*)
- SS Forced Main Line LOS D (S.U.E.*)

MISCELLANEOUS:

- Utility Pole
- Utility Pole with Base
- Utility Located Object
- Utility Traffic Signal Box
- Utility Unknown U/G Line LOS B (S.U.E.*)
- U/G Tank; Water, Gas, Oil
- Underground Storage Tank, Approx. Loc.
- A/G Tank; Water, Gas, Oil
- Geoenvironmental Boring
- U/G Test Hole LOS A (S.U.E.*)
- Abandoned According to Utility Records — AATUR
- End of Information — E.O.I.

| PROJECT REFERENCE NO. | SHEET NO. |
|---|---|
| W-5601DU | 2C-1 |

STD. DRAWING 862.01

STATE OF
NORTH CAROLINA
DEPT. OF TRANSPORTATION
DIVISION OF HIGHWAYS
RALEIGH, N.C.

1-18

ROADWAY STANDARD DRAWING FOR
**GUARDRAIL PLACEMENT**

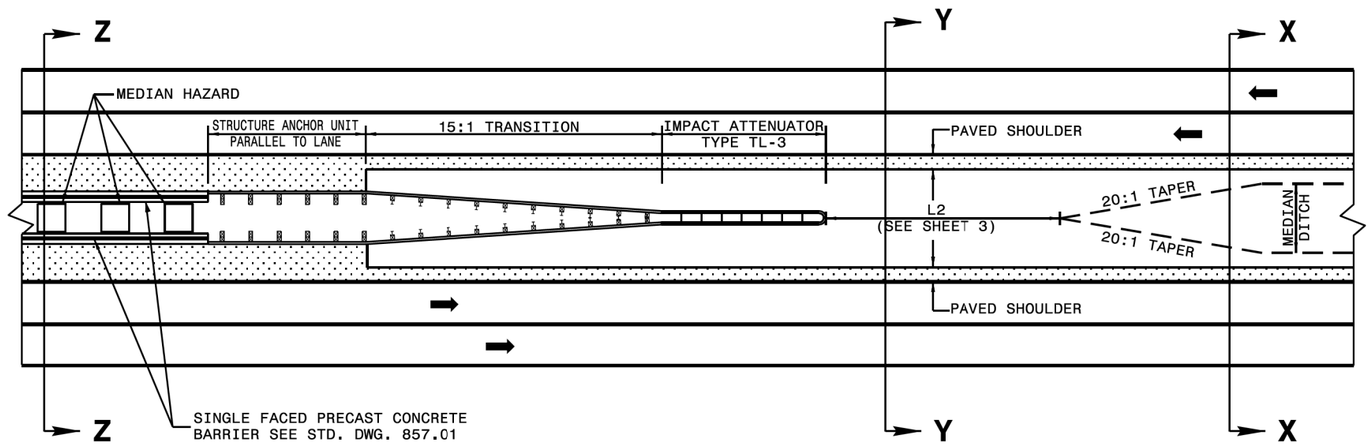


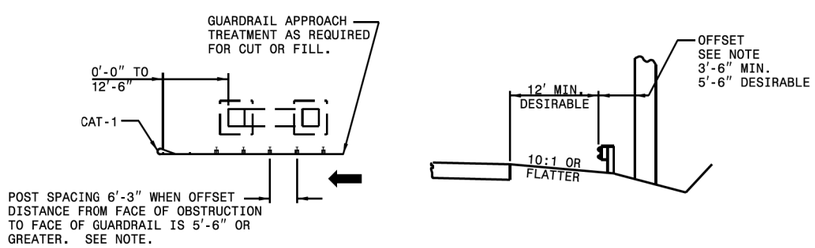


NOTE: WHEN OFFSET DISTANCE FROM FACE OF OBSTRUCTION TO FACE OF GUARDRAIL IS BETWEEN 3'-6" AND 5'-6", BEGIN 3'-1½" POST SPACING AT A POINT 25' BEFORE REACHING THE OBSTRUCTION AND CARRY THROUGHOUT ITS LENGTH. IF THE OFFSET IS LESS THAN 3'-6" USE CONCRETE BARRIER.

## DETAIL OF RIGHT SIDE GUARDRAIL AT UNDERPASS

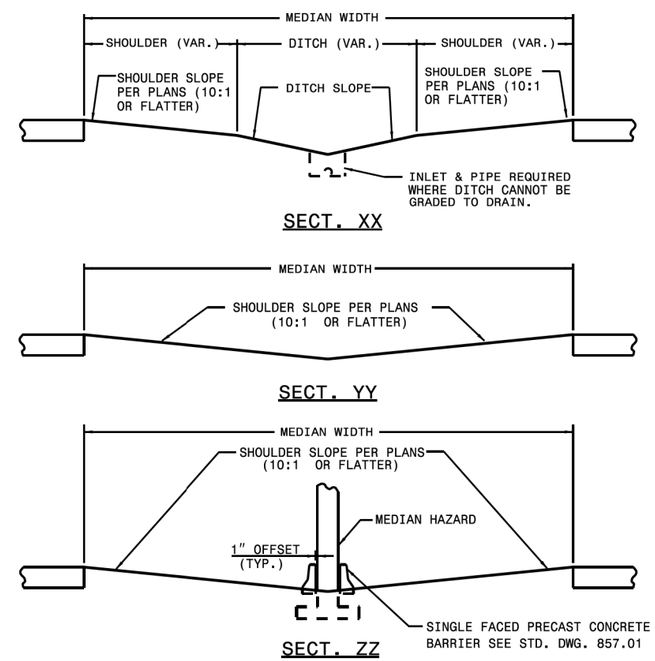


## DETAIL OF MEDIAN TREATMENT AT UNDERPASS

STATE OF
NORTH CAROLINA
DEPT. OF TRANSPORTATION
DIVISION OF HIGHWAYS
RALEIGH, N.C.

1-18

ROADWAY STANDARD DRAWING FOR
**GUARDRAIL PLACEMENT**

SHEET 1 OF 12
**862.01**

SHEET 1 OF 12
**862.01**

STATE OF
NORTH CAROLINA
DEPT. OF TRANSPORTATION
DIVISION OF HIGHWAYS
RALEIGH, N.C.

1-18

ROADWAY STANDARD DRAWING FOR
**GUARDRAIL PLACEMENT**

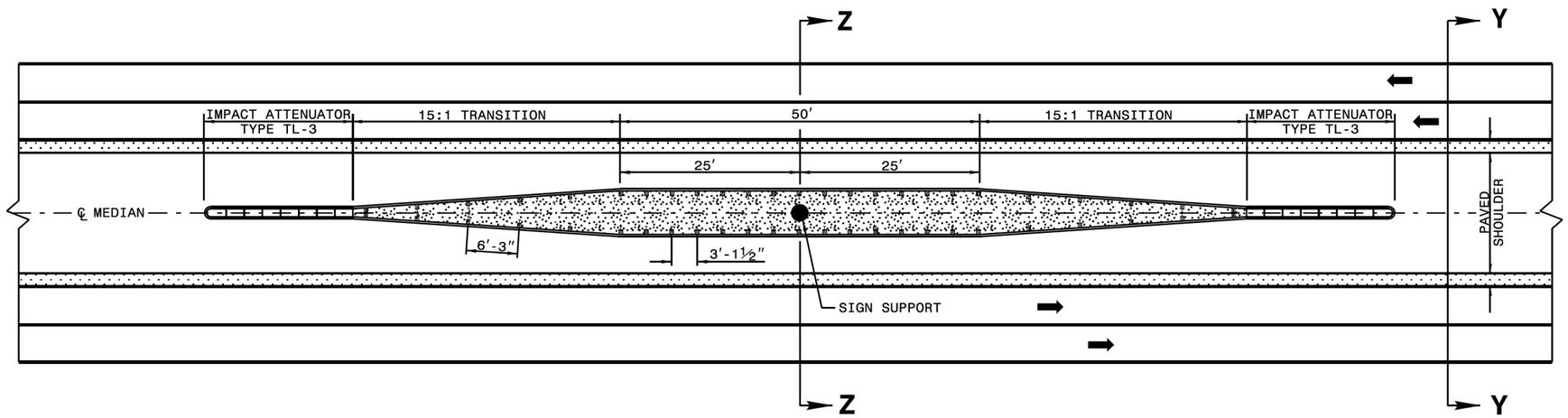


NOTE SPECIAL LAYER OF PAVEMENT .....

USE 3'-1½" POST SPACING ON THE 50' OF GUARDRAIL PARALLEL TO LANES AND 6'-3" POST SPACING ON 15:1 TRANSITION SECTIONS.
GRADE MEDIAN IN THE VICINITY OF THE SIGN SUPPORT AS ILLUSTRATED IN THE ROADWAY STANDARD DRAWINGS (STARDARD 862.01 SHEET 1 OF 12).

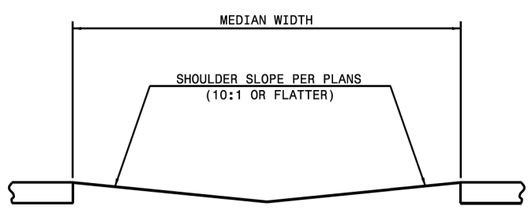


SECT. YY

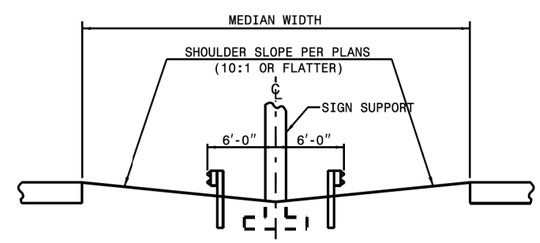


SECT. ZZ

## DETAIL OF GUARDRAIL AT MEDIAN SIGN SUPPORT


STATE OF
NORTH CAROLINA
DEPT. OF TRANSPORTATION
DIVISION OF HIGHWAYS
RALEIGH, N.C.

1-18

ROADWAY STANDARD DRAWING FOR
**GUARDRAIL PLACEMENT**

STATE OF NORTH CAROLINA
DEPT. OF TRANSPORTATION
DIVISION OF HIGHWAYS
RALEIGH, N.C.

1-18

ROADWAY STANDARD DRAWING FOR
**GUARDRAIL PLACEMENT**

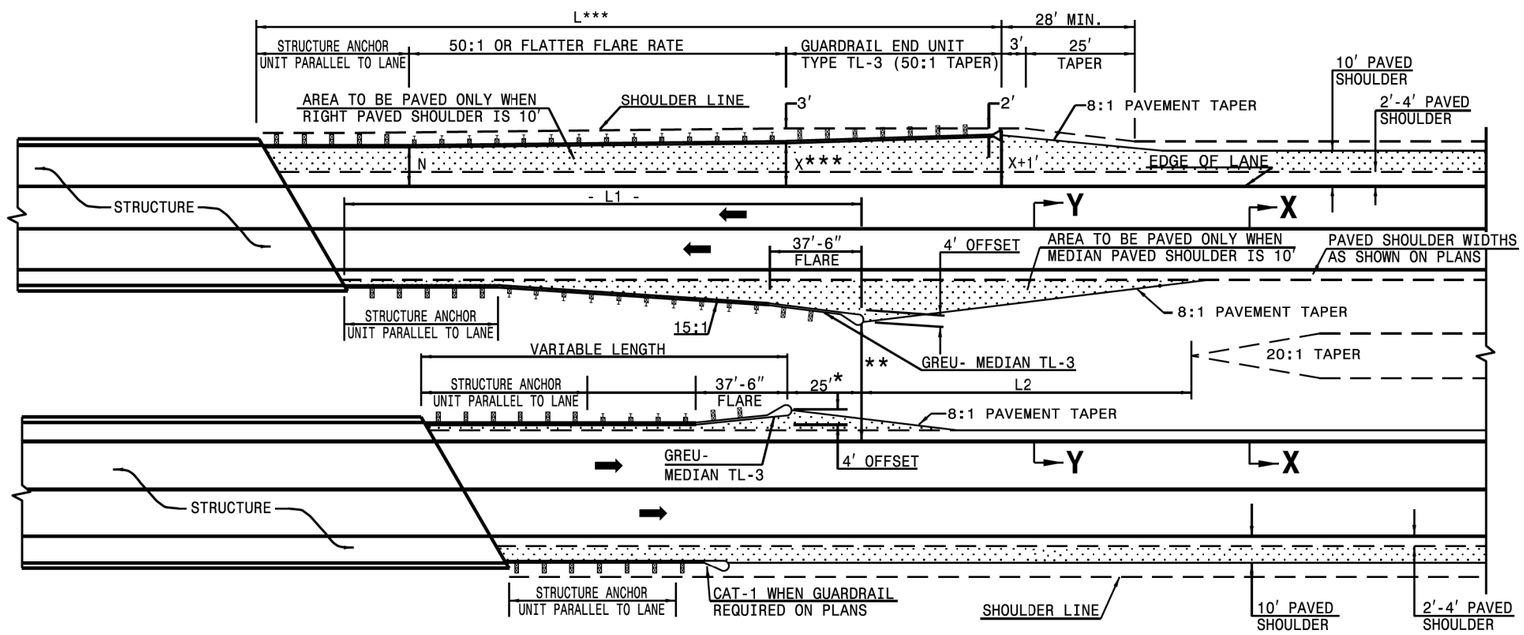


| DIMENSIONS FOR LENGTH OF GUARDRAIL APPROACHING DUAL LANE BRIDGES | | | | | | | |
|---|---|---|---|---|---|---|---|
| MEDIAN WIDTH | -L-*** | | | -L1- | | | -L2- |
| | 70 MPH | 60 MPH | 50 MPH | 70 MPH | 60 MPH | 50 MPH | DIM. |
| 30' | 300.0' | 250.0' | 150.0' | 187.5' | 162.5' | 137.5' | 80.0' |
| 36' | 300.0' | 250.0' | 150.0' | 212.5' | 187.5' | 137.5' | 60.0' |
| 40' & ABOVE | 300.0' | 250.0' | 150.0' | 212.5' | 187.5' | 137.5' | 40.0' |

NOTES: * MINOR VARIATION TO THE 25'-0" DIMENSION IS PERMISSIBLE TO ACCOMODATE THE 12'-6" IN GUARDRAIL LENGTHS.

** NO GUARDRAIL IS REQUIRED ON THE TRAILING END WHEN THIS DISTANCE EXCEEDS CLEAR ROADSIDE RECOVERY AREA FOR THE APPROPRIATE DESIGN SPEED.

*** BASED ON "X" OF 12'
USE FLARE RATE AS THE CONTROL IF THE "X" DISTANCE IS NOT OBTAINED. ("X" IS BASED ON SHOULDER WIDTHS IN THE HIGHWAY DESIGN BRANCH MANUAL, PART 1, 1-4B, F1A).

"N"= DISTANCE FROM EDGE OF LANE TO FACE OF GUARDRAIL WHERE GUARDRAIL IS PARALLEL TO LANE.

THE DESIGN LAYOUT FOR LENGTHS SHOWN ON THIS STANDARD ARE MINIMUM DESIGN LENGTHS.

SEE SHEET 1 OF 12 FOR SECTIONS XX, YY

SEE STD. 862.03 FOR STRUCTURE ANCHOR UNITS

## DETAIL OF GUARDRAIL APPROACHING DUAL LANE BRIDGES


STATE OF NORTH CAROLINA
DEPT. OF TRANSPORTATION
DIVISION OF HIGHWAYS
RALEIGH, N.C.

1-18

ROADWAY STANDARD DRAWING FOR
**GUARDRAIL PLACEMENT**

STATE OF NORTH CAROLINA
DEPT. OF TRANSPORTATION
DIVISION OF HIGHWAYS
RALEIGH, N.C.

1-18

ROADWAY STANDARD DRAWING FOR
**GUARDRAIL PLACEMENT**

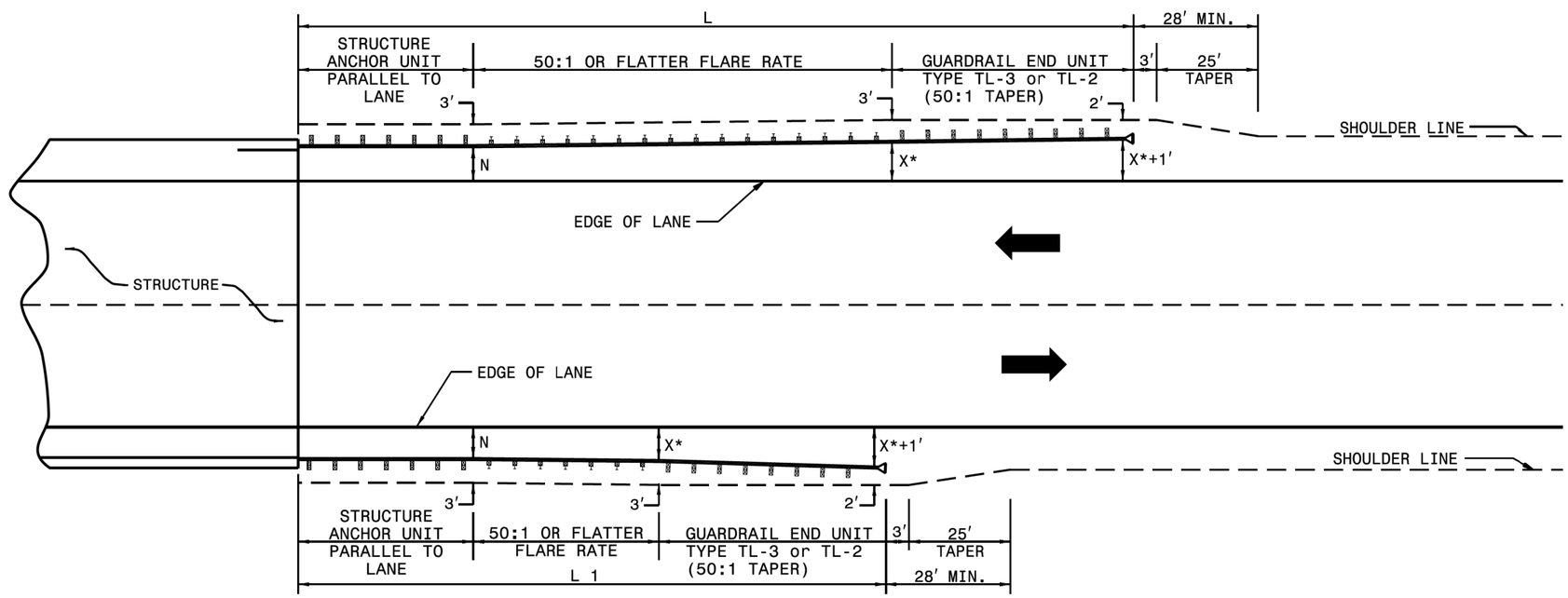


* USE FLARE RATE AS THE CONTROL IF THE "X" DISTANCE IS NOT OBTAINED. ("X" IS BASED ON SHOULDER WIDTHS IN THE HIGHWAY DESIGN BRANCH MANUAL, PART 1, 1-4B, F1).

"N"= DISTANCE FROM EDGE OF LANE TO FACE OF GUARDRAIL WHERE GUARDRAIL IS PARALLEL TO LANE.

SEE STD. 862.03 FOR STRUCTURE ANCHOR UNITS

GUARDRAIL INSTALLATION AT BRIDGE APPROACHES FOR TWO-LANE, TWO-WAY TRAFFIC

| DESIGN SPEED (MPH) | "L" APPROACH LENGTH (FT.) | | | | "L1" TRAILING LENGTH (FT.) | | | |
|---|---|---|---|---|---|---|---|---|
| | DESIGN YEAR ADT | | CURRENT YEAR ADT | | DESIGN YEAR ADT | | CURRENT YEAR ADT | |
| | OVER 2000 | 1001-2000 | 400-1000 | UNDER 400 | OVER 2000 | 1001-2000 | 400-1000 | UNDER 400 |
| 70 | 362.5′ | 362.5′ | 350.0′ | 287.5′ | 187.5′ | 187.5′ | 175.0′ | 75.0′ |
| 60 | 300.0′ | 287.5 | 275.0′ | 225.0′ | 137.5′ | 137.5′ | 100.0′ | 75.0′ |
| 50 | 212.5′ | 212.5′ | 200.0′ | 162.5′ | 87.5′ | 75.0′ | 75.0′ | 75.0′ |
| 40 | 175.0′ | 150.0′ | 137.5′ | 112.5′ | 75.0′ | 75.0′ | 75.0′ | 75.0′ |
| | | | | | | | | |
| X * | 8′ | 6′ | 4′ | 4′ | 8′ | 6′ | 4′ | 4′ |

## LENGTHS AND OFFSETS FOR PROPOSED GUARDRAIL AT TWO LANE - TWO WAY LOCATIONS


STATE OF NORTH CAROLINA
DEPT. OF TRANSPORTATION
DIVISION OF HIGHWAYS
RALEIGH, N.C.

1-18

ROADWAY STANDARD DRAWING FOR
**GUARDRAIL PLACEMENT**

STATE OF NORTH CAROLINA
DEPT. OF TRANSPORTATION
DIVISION OF HIGHWAYS
RALEIGH, N.C.

1-18

ROADWAY STANDARD DRAWING FOR
**GUARDRAIL PLACEMENT**

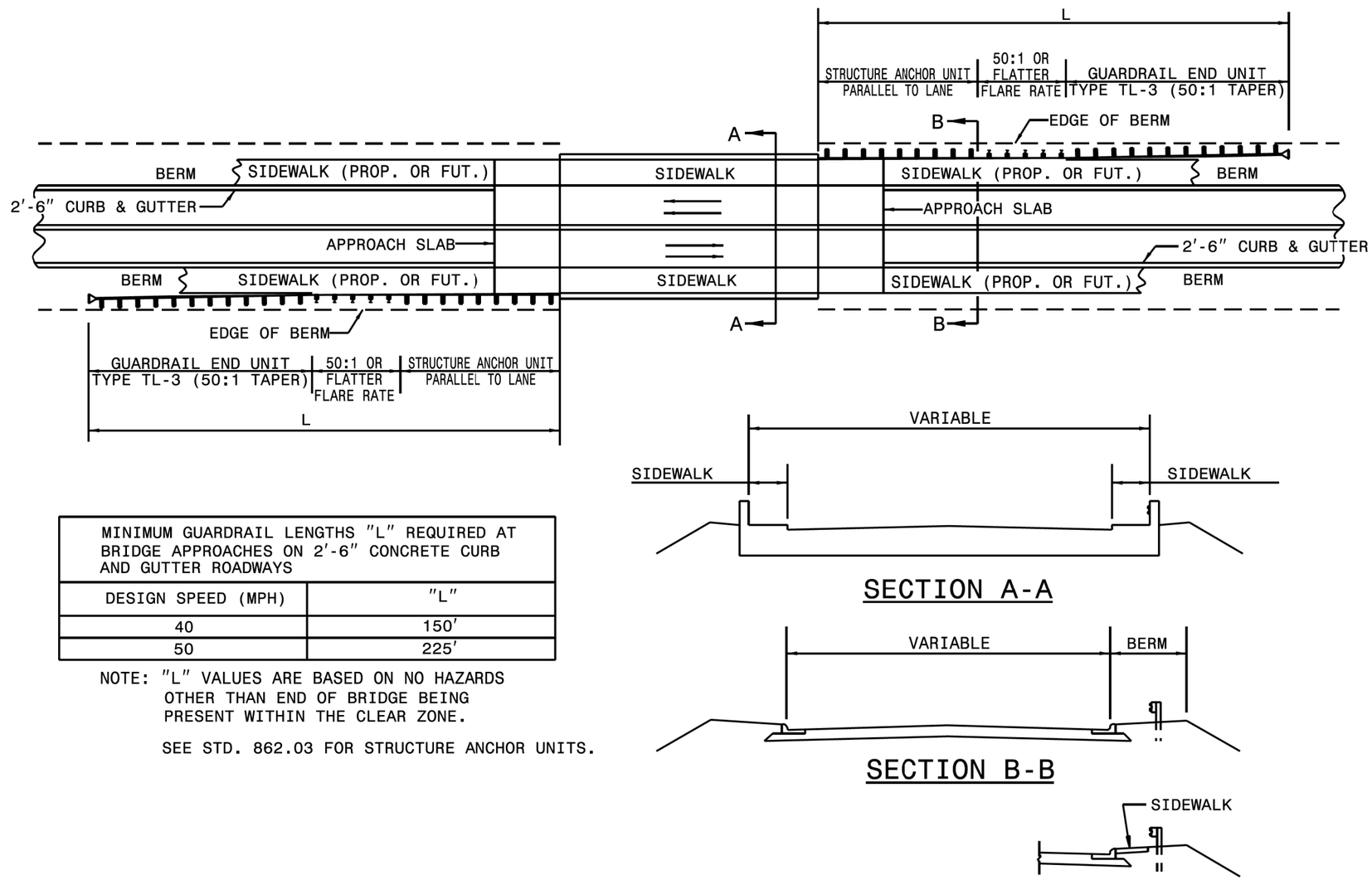


| MINIMUM GUARDRAIL LENGTHS "L" REQUIRED AT BRIDGE APPROACHES ON 2'-6" CONCRETE CURB AND GUTTER ROADWAYS | |
|---|---|
| DESIGN SPEED (MPH) | "L" |
| 40 | 150' |
| 50 | 225' |

NOTE: "L" VALUES ARE BASED ON NO HAZARDS OTHER THAN END OF BRIDGE BEING PRESENT WITHIN THE CLEAR ZONE.

SEE STD. 862.03 FOR STRUCTURE ANCHOR UNITS.

## STANDARD GUARDRAIL PLACEMENT AT BRIDGES WITH 2'-6" CONCRETE CURB AND GUTTER


STATE OF NORTH CAROLINA
DEPT. OF TRANSPORTATION
DIVISION OF HIGHWAYS
RALEIGH, N.C.

1-18

ROADWAY STANDARD DRAWING FOR
**GUARDRAIL PLACEMENT**

STATE OF NORTH CAROLINA
DEPT. OF TRANSPORTATION
DIVISION OF HIGHWAYS
RALEIGH, N.C.

1-18

ROADWAY STANDARD DRAWING FOR
**GUARDRAIL PLACEMENT**

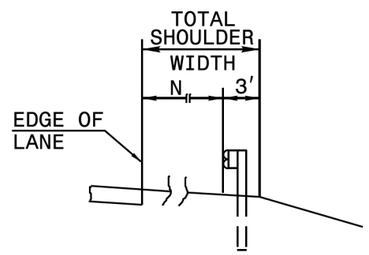


FILL SECTION

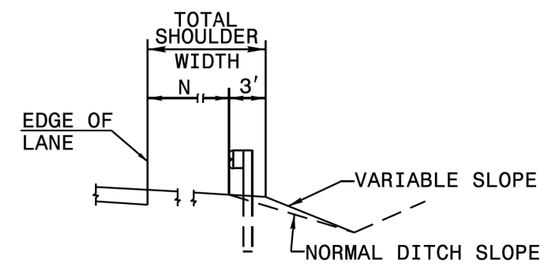


CUT SECTION

"N"= DISTANCE FROM EDGE OF LANE TO FACE OF GUARDRAIL WHERE GUARDRAIL IS PARALLEL TO LANE.

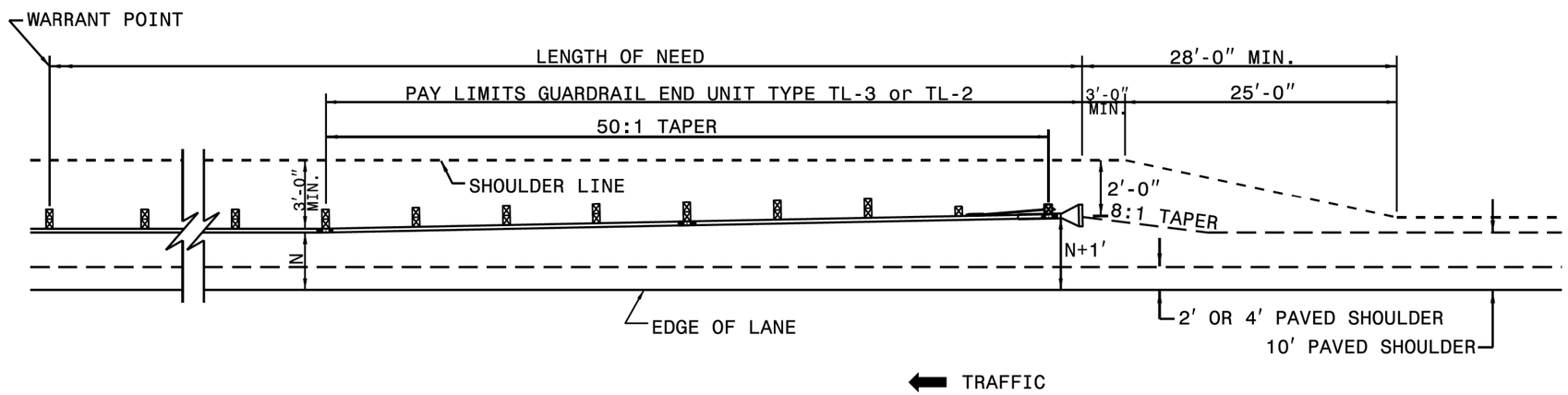


**DETAIL OF BEGINNING OF GUARDRAIL IN CUT OR FILL SECTION**


STATE OF NORTH CAROLINA
DEPT. OF TRANSPORTATION
DIVISION OF HIGHWAYS
RALEIGH, N.C.

1-18

ROADWAY STANDARD DRAWING FOR
**GUARDRAIL PLACEMENT**





SHEET 6 OF 12
862.01

| PROJECT REFERENCE NO. | SHEET NO. |
|---|---|
| W-5601DU | 2C-7 |

STD. DRAWING 862.01

STATE OF NORTH CAROLINA
DEPT. OF TRANSPORTATION
DIVISION OF HIGHWAYS
RALEIGH, N.C.

1-18

ROADWAY STANDARD DRAWING FOR
**GUARDRAIL PLACEMENT**

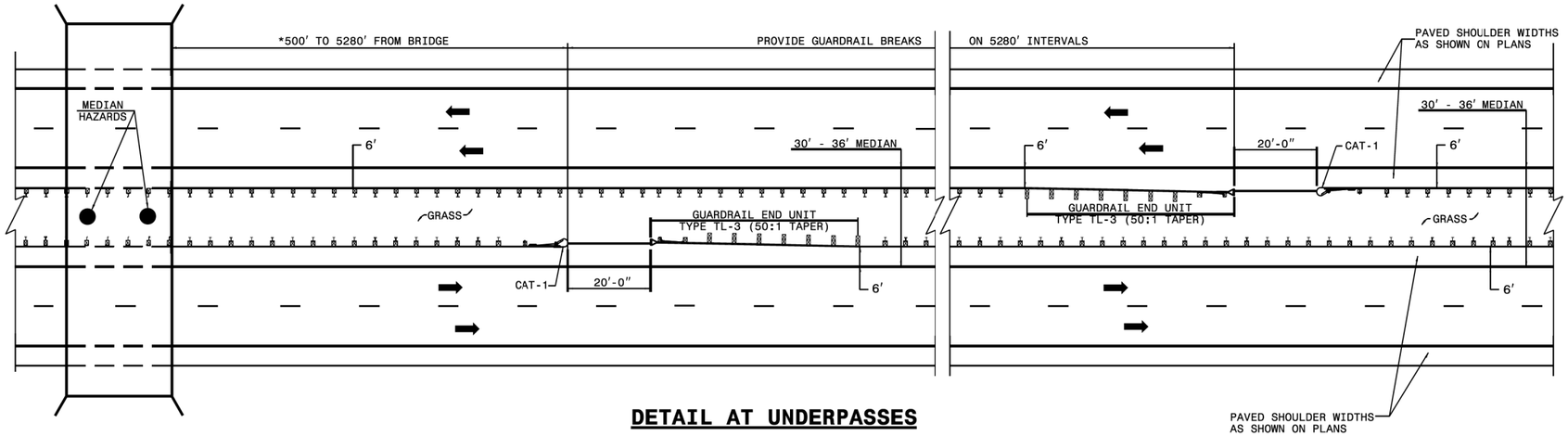


**DETAIL AT UNDERPASSES**

* GUARDRAIL OPENING MAY BE SPACED AS CLOSE AS 350 FT. FROM STRUCTURE IF NECCESSARY TO ALLOW MOWER ACCESS TO MEDIAN

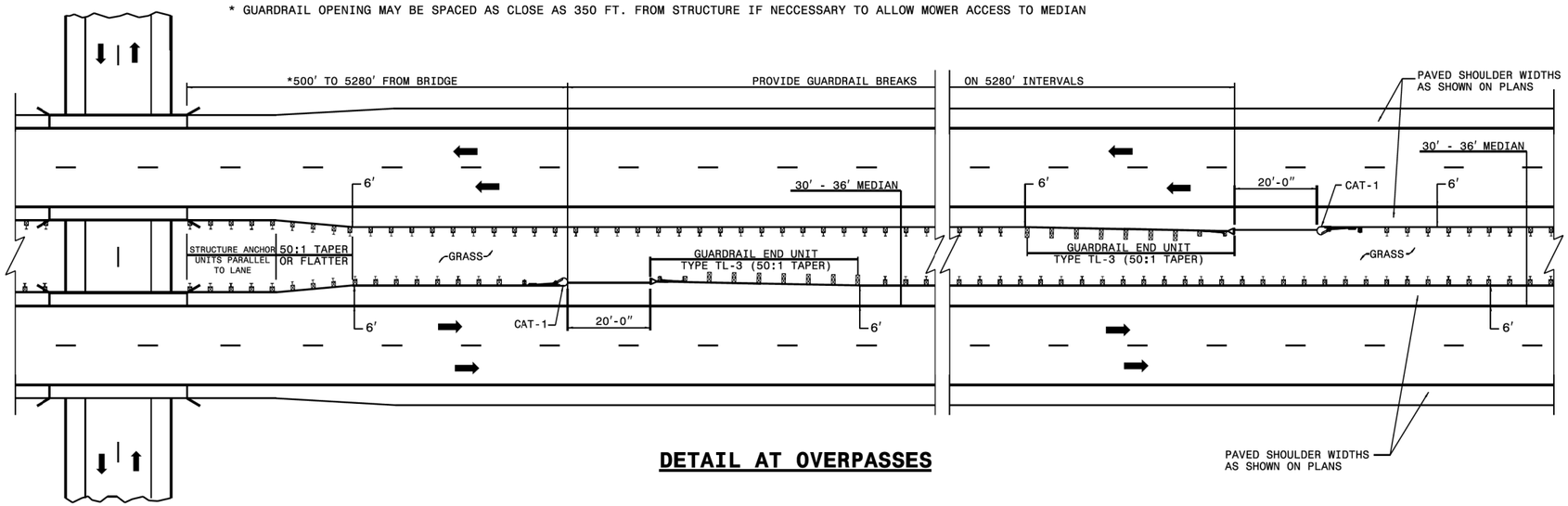


**DETAIL AT OVERPASSES**

## GUARDRAIL BREAK INTERVALS WITH 30' - 36' MEDIANS

SHEET 7 OF 12
862.01

STATE OF NORTH CAROLINA
DEPT. OF TRANSPORTATION
DIVISION OF HIGHWAYS
RALEIGH, N.C.

1-18

ROADWAY STANDARD DRAWING FOR
**GUARDRAIL PLACEMENT**

SHEET 7 OF 12
862.01

STATE OF NORTH CAROLINA
DEPT. OF TRANSPORTATION
DIVISION OF HIGHWAYS
RALEIGH, N.C.

1-18

ROADWAY STANDARD DRAWING FOR
**GUARDRAIL PLACEMENT**

NOTES:

SHOP CURVED GUARDRAIL IS DEFINED AS HAVING A RADIUS OF 150′ OR LESS.

WHEN RADIUS IS LESS THAN 20′ REFER TO SHEET 9.

WHENEVER SHOP CURVED GUARDRAIL IS USED AS AN ANCHOR AND THE RADIUS IS FROM 20′ TO 75′, USE A MINIMUM LENGTH OF 50′ OF SHOP CURVED GUARDRAIL AND FLARE WITH AN AT-1 ANCHOR UNIT. REFER TO DETAIL 1.

WHENEVER SHOP CURVED GUARDRAIL RADIUS IS MORE THAN 75′, REFER TO DETAIL 2.

MAINTAIN CLEAR SIGHT DISTANCE.

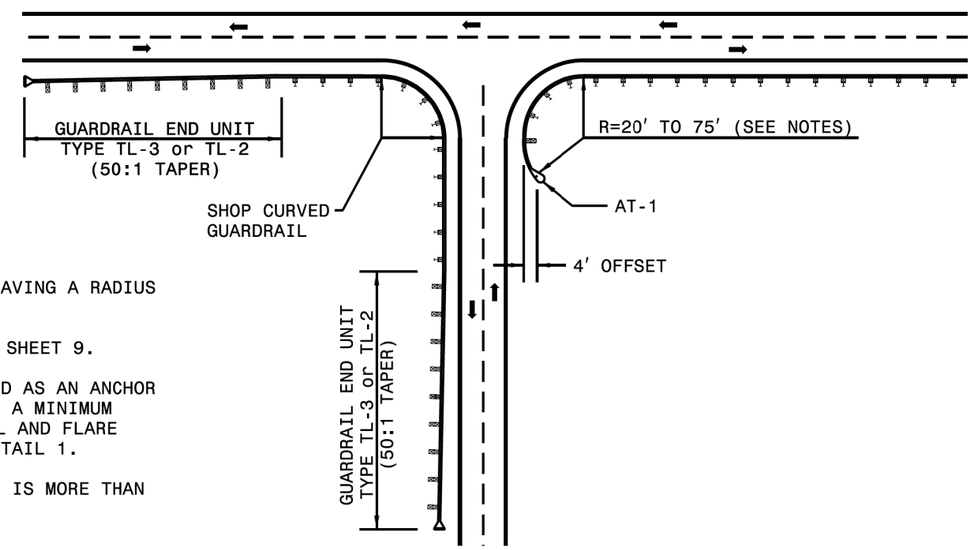


**DETAIL-1**

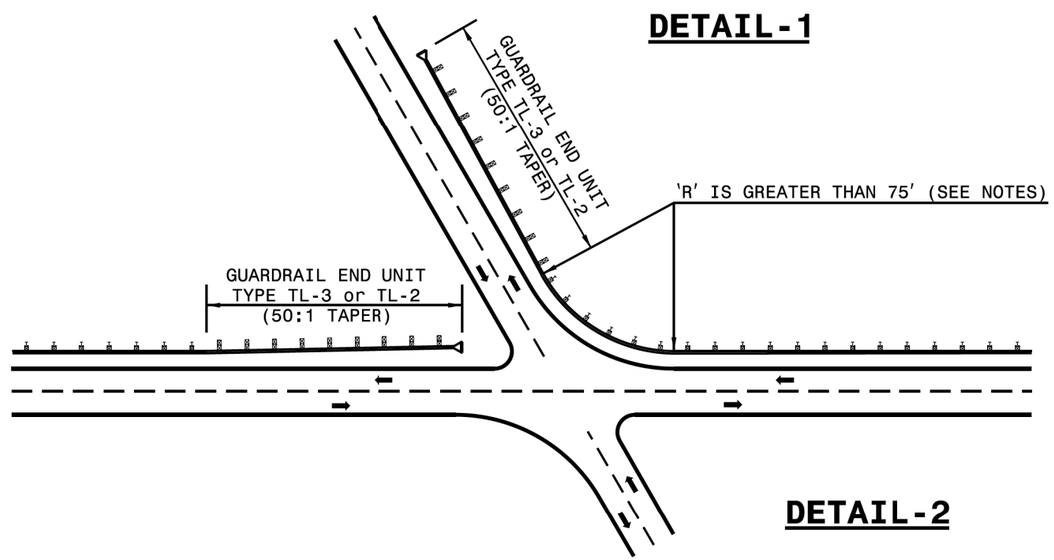


**DETAIL-2**

## GUARDRAIL TREATMENT AT INTERSECTIONS

STATE OF NORTH CAROLINA
DEPT. OF TRANSPORTATION
DIVISION OF HIGHWAYS
RALEIGH, N.C.

1-18

ROADWAY STANDARD DRAWING FOR
**GUARDRAIL PLACEMENT**

STATE OF
NORTH CAROLINA
DEPT. OF TRANSPORTATION
DIVISION OF HIGHWAYS
RALEIGH, N.C.

1-18

ROADWAY STANDARD DRAWING FOR
**GUARDRAIL PLACEMENT**

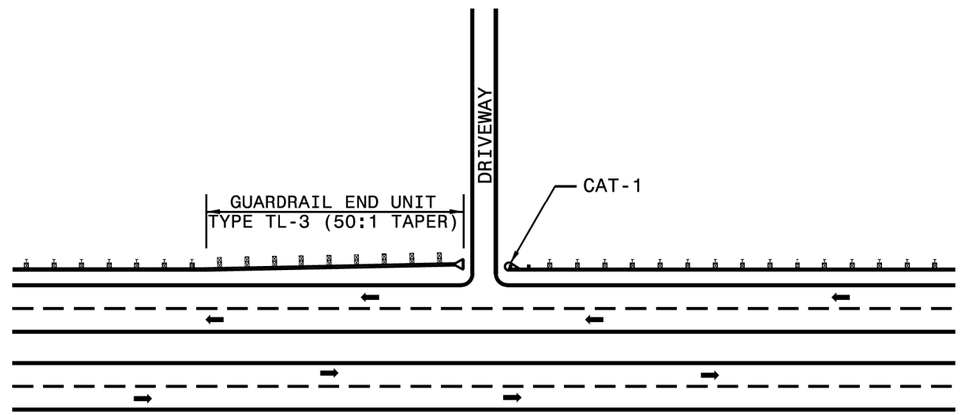


**DETAIL-3**

DIVIDED HIGHWAY

NOTE: USE DETAIL 3 & 4 WHENEVER 20′ OR LARGER RADIUS CANNOT BE UTILIZED.

MAINTAIN CLEAR SIGHT DISTANCE.

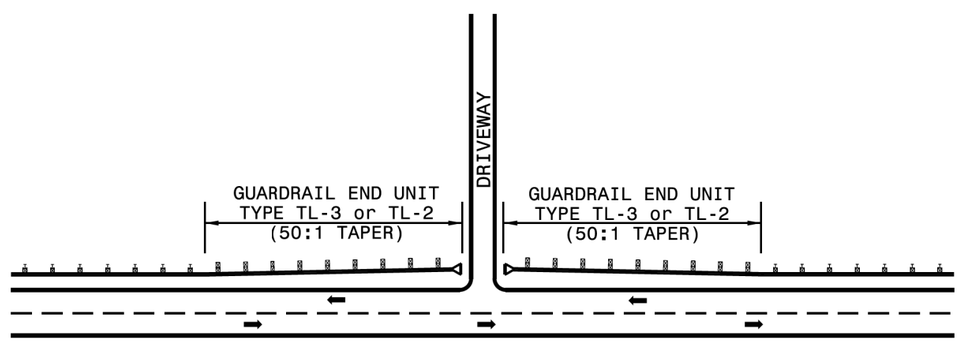


**DETAIL-4**

UNDIVIDED HIGHWAY

## GUARDRAIL TREATMENT AT DRIVEWAYS




STATE OF
NORTH CAROLINA
DEPT. OF TRANSPORTATION
DIVISION OF HIGHWAYS
RALEIGH, N.C.

1-18

ROADWAY STANDARD DRAWING FOR
**GUARDRAIL PLACEMENT**

SHEET 9 OF 12
862.01

| PROJECT REFERENCE NO. | SHEET NO. |
|---|---|
| W-5601DU | 2C-10 |

STD. DRAWING 862.01

STATE OF NORTH CAROLINA
DEPT. OF TRANSPORTATION
DIVISION OF HIGHWAYS
RALEIGH, N.C.

1-18

ROADWAY STANDARD DRAWING FOR
**GUARDRAIL PLACEMENT**
25'-0" CLEAR SPAN

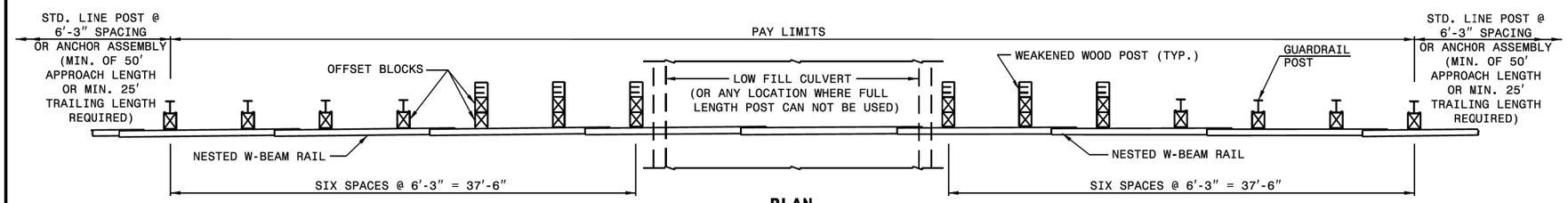


**PLAN**

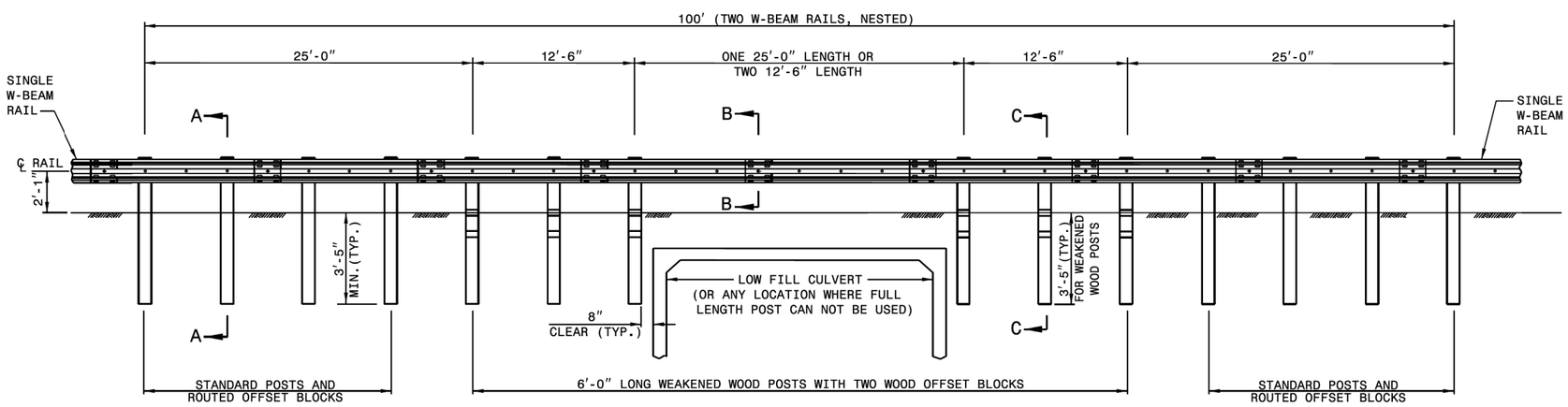


**ELEVATION**
**25'-0" GUARDRAIL SPAN**

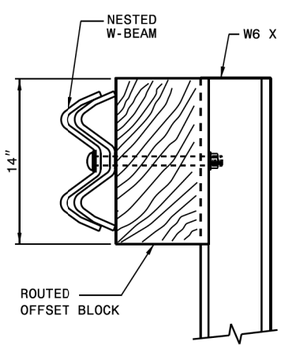


**SECTION A-A**

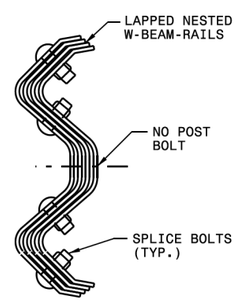


**RAIL SPLICE**
**SECTION B-B**

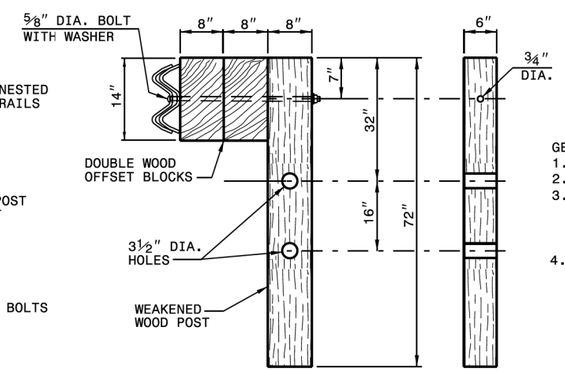


**SECTION C-C**
**WEAKENED WOOD POST**

**FRONT**

GENERAL NOTES:
1. LAP RAIL IN THE DIRECTION OF TRAFFIC FLOW.
2. SEE ROADWAY PLANS FOR LOCATIONS AND CONTINUATION OF RAIL OR END SECTIONS.
3. 25'-0" SPAN: POSTS MAY BE ELIMINATED SUCH THAT A MAXIMUM OF ONE RAIL SPLICE IS LOCATED WITHIN THE UNSUPPORTED LENGTH. A 25'-0" LENGTH OF NESTED W-BEAM RAIL MAY BE USED TO ELIMINATE A SPLICE WITHIN THE 25'-0" CLEAR SPAN.
4. MINIMUM DISTANCE OF 5 FEET BEHIND THE GUARDRAIL SHOULD BE CLEAR OF ANY FIXED-OBJECT HAZARDS THAT COULD SNAG AN IMPACTING VEHICLE.

STATE OF NORTH CAROLINA
DEPT. OF TRANSPORTATION
DIVISION OF HIGHWAYS
RALEIGH, N.C.

1-18

ROADWAY STANDARD DRAWING FOR
**GUARDRAIL PLACEMENT**
25'-0" CLEAR SPAN



SHEET 10 OF 12
862.01

STATE OF
NORTH CAROLINA
DEPT. OF TRANSPORTATION
DIVISION OF HIGHWAYS
RALEIGH, N.C.

1-18

ENGLISH STANDARD DRAWING FOR

# GUARDRAIL PLACEMENT

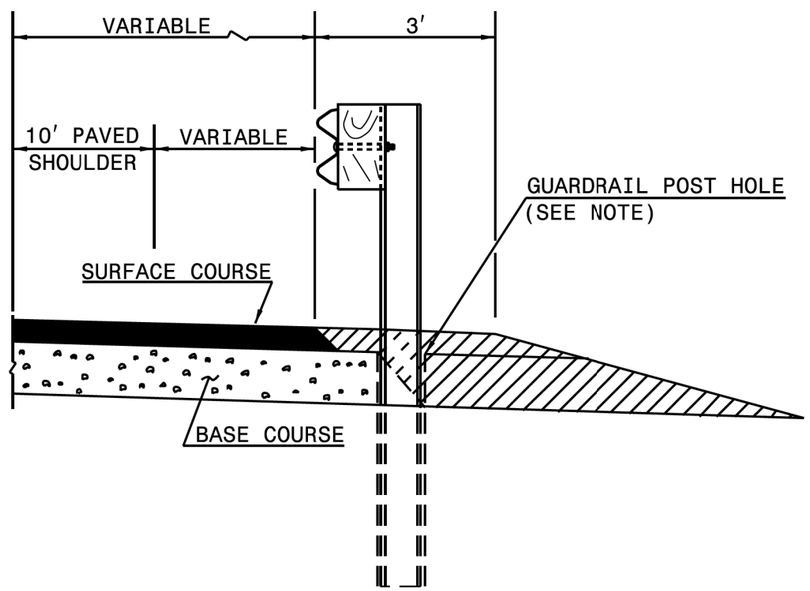


**FLEXIBLE PAVED SHOULDER**

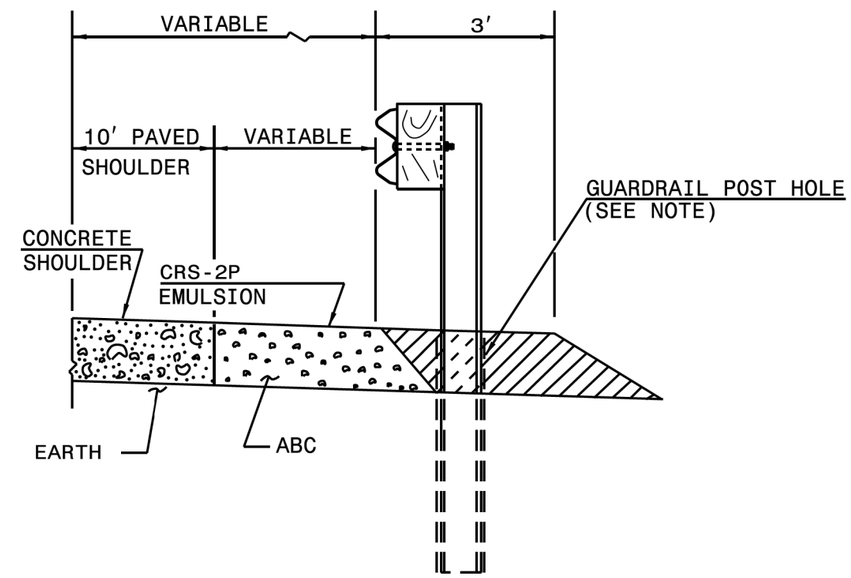


**CONCRETE PAVED SHOULDER**

EARTH MATERIAL

NOTE:
WHEN WOODEN GUARDRAIL POSTS ARE USED, DRILL HOLES THROUGH EARTH MATERIAL AND BASE COURSE.THE POST MAY THEN BE DRIVEN TO THE PROPER DEPTH. DRILL THE HOLE OF SUFFICIENT SIZE TO ACCOMMODATE THE PARTICULAR POST BEING USED. BACKFILL AND TAMP HOLES USING THE EXCAVATED MATERIAL.


STATE OF
NORTH CAROLINA
DEPT. OF TRANSPORTATION
DIVISION OF HIGHWAYS
RALEIGH, N.C.

1-18

ENGLISH STANDARD DRAWING FOR

GUARDRAIL PLACEMENT

| PROJECT REFERENCE NO. | SHEET NO. |
|---|---|
| W-5601DU | 2C-12 |

STD. DRAWING 862.01

STATE OF NORTH CAROLINA
DEPT. OF TRANSPORTATION
DIVISION OF HIGHWAYS
RALEIGH, N.C.

1-18

ROADWAY STANDARD DRAWING FOR

**GUARDRAIL PLACEMENT**

GUARDRAIL TREATMENT AT CURB AND GUTTER

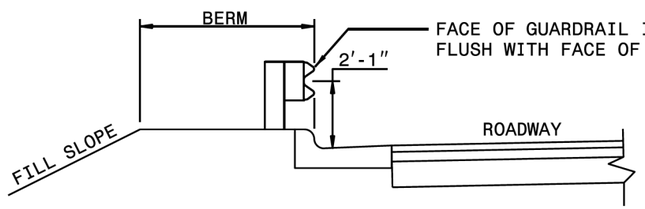


**SECTION D-D**

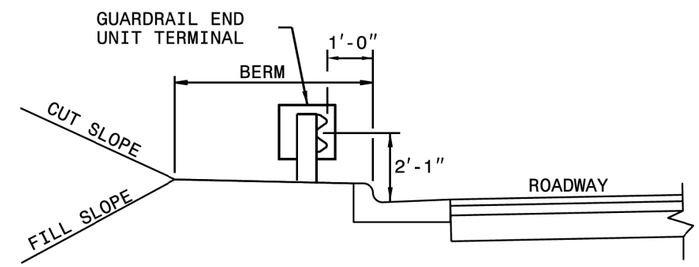


**SECTION C-C**

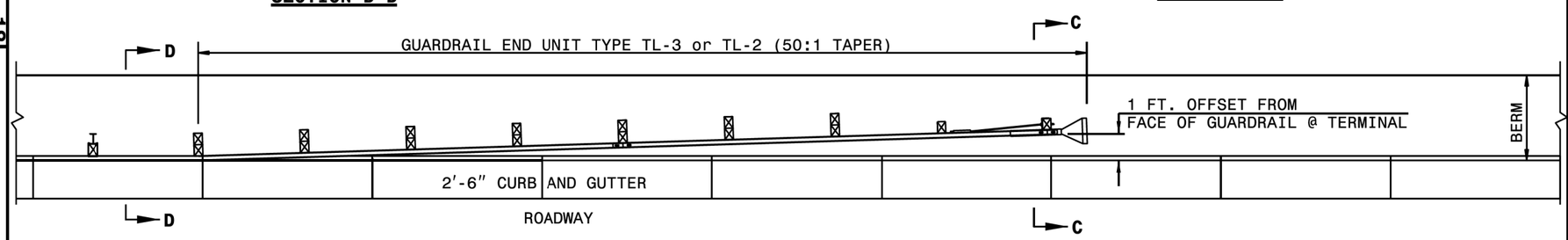


**GUARDRAIL AT FACE OF CURB**

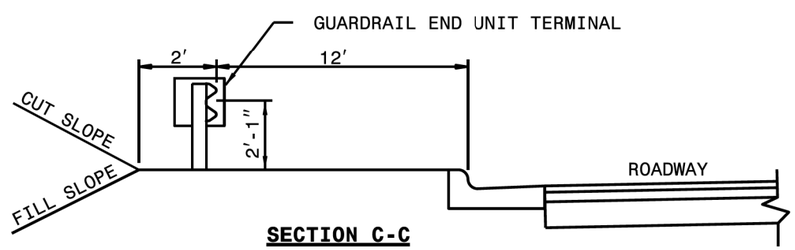


**SECTION C-C**

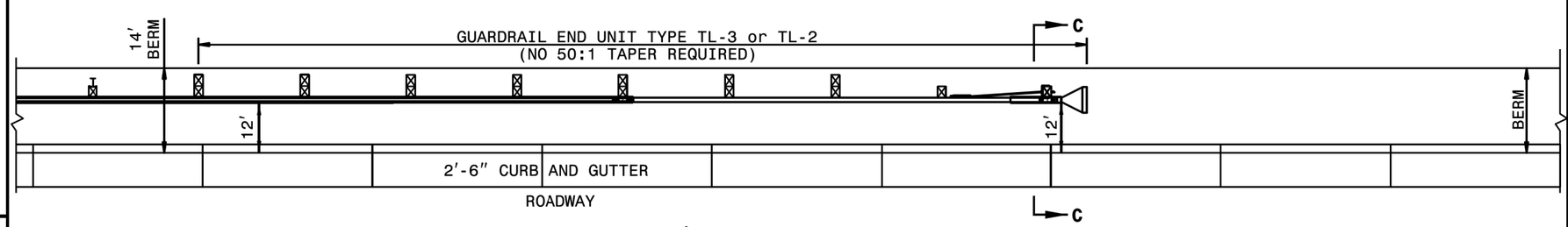


**GUARDRAIL 12' OFFSET FROM FACE OF CURB**

STATE OF NORTH CAROLINA
DEPT. OF TRANSPORTATION
DIVISION OF HIGHWAYS
RALEIGH, N.C.

1-18

ROADWAY STANDARD DRAWING FOR

**GUARDRAIL PLACEMENT**

GUARDRAIL TREATMENT AT CURB AND GUTTER



SHEET 12 OF 12
862.01

| PROJECT REFERENCE NO. | SHEET NO. |
|---|---|
| W-5601DU | 2C-13 |

STD. DRAWING 862.02

STATE OF
NORTH CAROLINA
DEPT. OF TRANSPORTATION
DIVISION OF HIGHWAYS
RALEIGH, N.C.

1-18

ROADWAY STANDARD DRAWING FOR
**GUARDRAIL INSTALLATION**

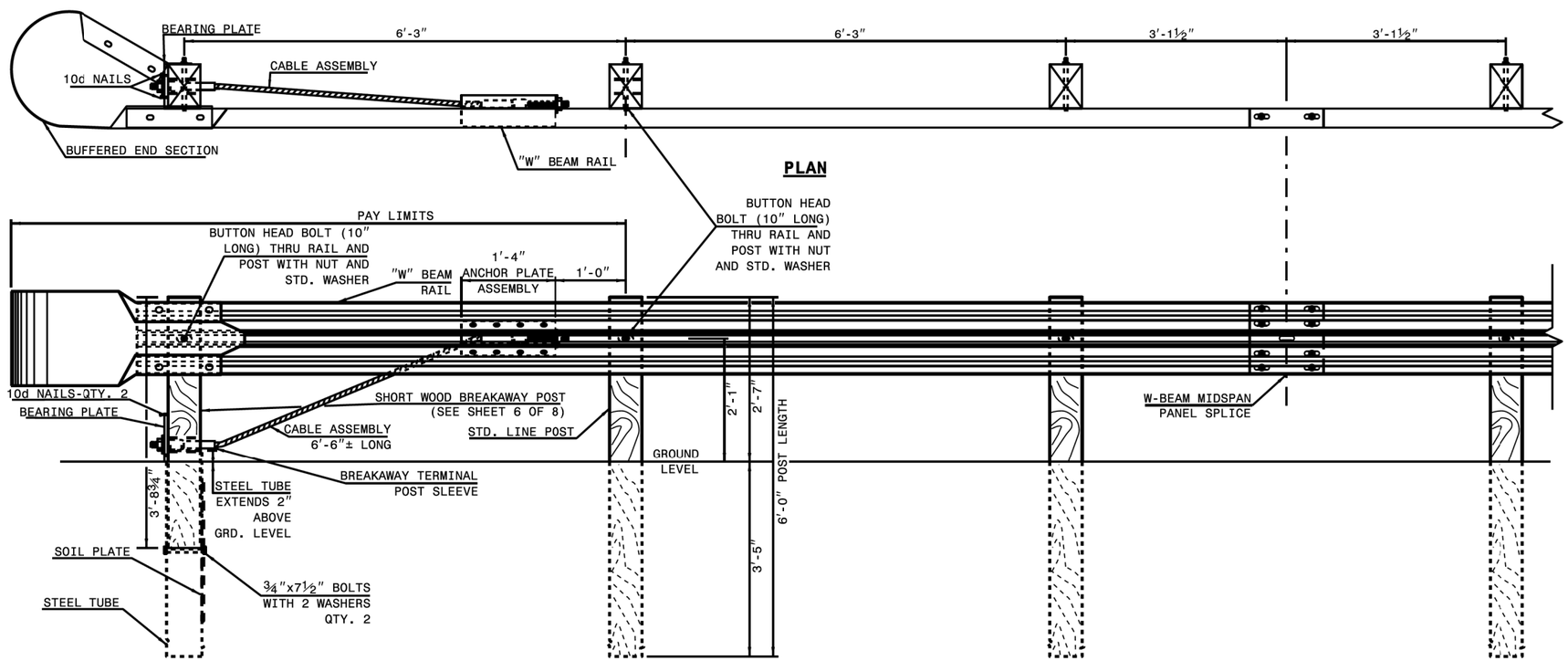


# TRAILING END UNIT ASSEMBLY

## C.A.T.-1 SYSTEM

SHEET 1 OF 8

**862.02**


STATE OF
NORTH CAROLINA
DEPT. OF TRANSPORTATION
DIVISION OF HIGHWAYS
RALEIGH, N.C.

1-18

ROADWAY STANDARD DRAWING FOR
**GUARDRAIL INSTALLATION**

SHEET 1 OF 8

**862.02**

STATE OF
NORTH CAROLINA
DEPT. OF TRANSPORTATION
DIVISION OF HIGHWAYS
RALEIGH, N.C.

1-18

ROADWAY STANDARD DRAWING FOR
**GUARDRAIL INSTALLATION**

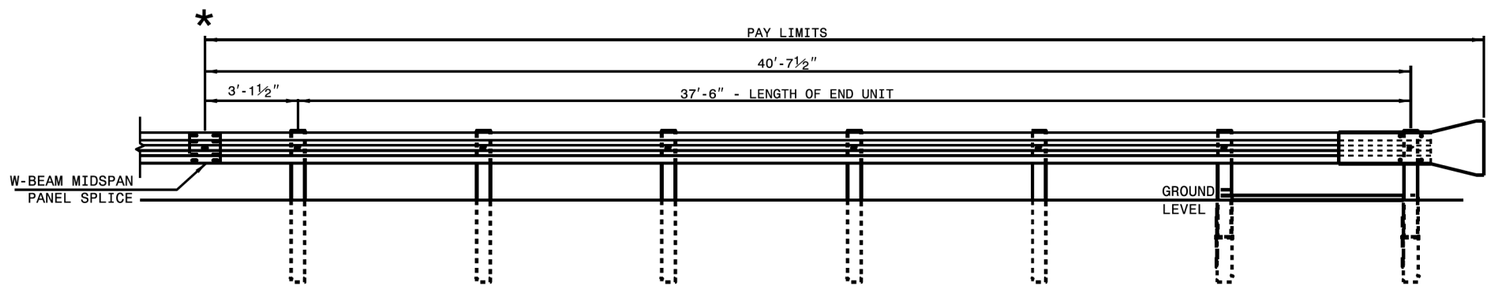


**FLARED AND TANGENT**
**ELEVATION VIEW**

*** WHEN INSTALLING GUARDRAIL END UNITS THAT ARE 2'-1" MOUNTING HEIGHT TO EXISTING GUARDRAIL, REMOVE THE EXISTING GUARDRAIL TO TRANSITION FROM THE EXISTING HEIGHT TO THE PROPOSED 2'-1" HEIGHT. SEE 862.02, SHEET 4 OF 8 FOR TRANSITION DETAILS.**

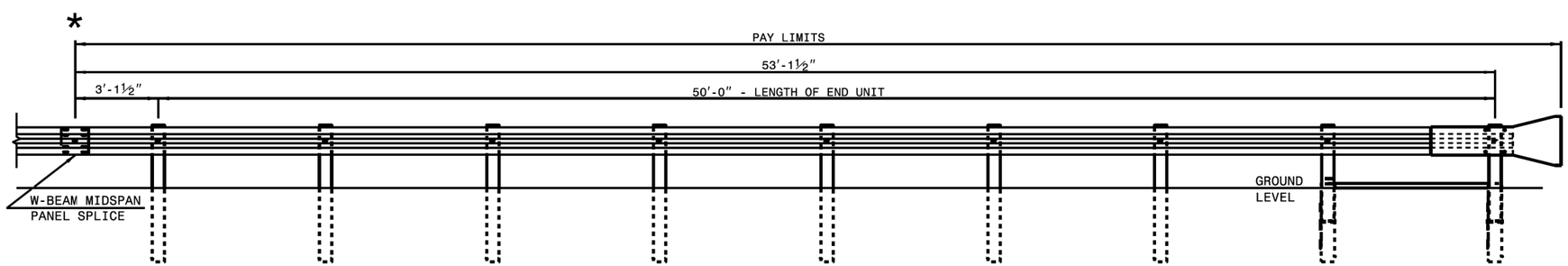


**FLARED AND TANGENT**
**ELEVATION VIEW**

## APPROACH END UNITS




STATE OF
NORTH CAROLINA
DEPT. OF TRANSPORTATION
DIVISION OF HIGHWAYS
RALEIGH, N.C.

1-18

ROADWAY STANDARD DRAWING FOR
**GUARDRAIL INSTALLATION**

SHEET 2 OF 8
862.02

STATE OF
NORTH CAROLINA
DEPT. OF TRANSPORTATION
DIVISION OF HIGHWAYS
RALEIGH, N.C.

1-18

ROADWAY STANDARD DRAWING FOR
**GUARDRAIL INSTALLATION**

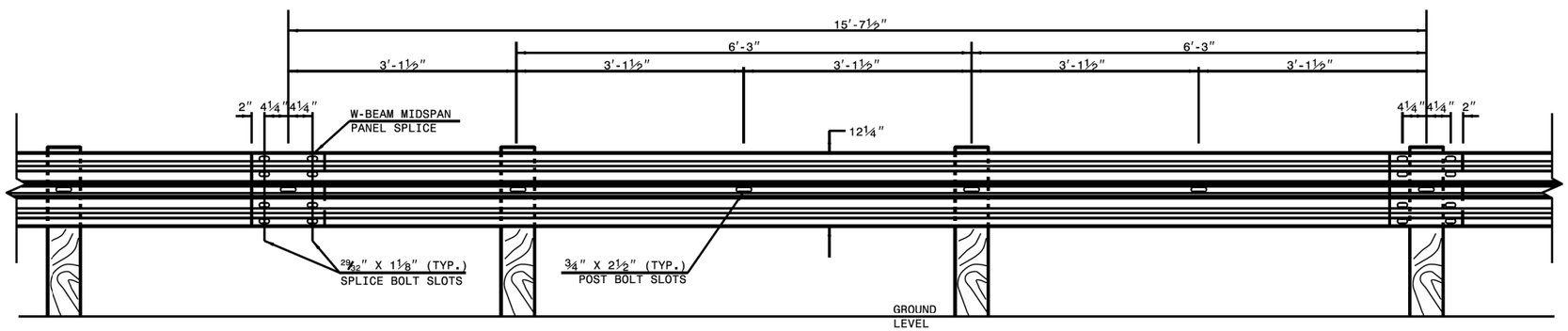


**15'-7½" W-BEAM GUARDRAIL PANEL**

**NOTE:** USE 5-SPACE 15'-7½" W-BEAM GUARDRAIL PANEL AT THE DOWNSTREAM END OF AN END UNIT THAT DOES NOT OFFSET THE W-BEAM PANEL SPLICE TO MIDSPAN


STATE OF
NORTH CAROLINA
DEPT. OF TRANSPORTATION
DIVISION OF HIGHWAYS
RALEIGH, N.C.

1-18

ROADWAY STANDARD DRAWING FOR
**GUARDRAIL INSTALLATION**





SHEET 3 OF 8
862.02

STATE OF
NORTH CAROLINA
DEPT. OF TRANSPORTATION
DIVISION OF HIGHWAYS
RALEIGH, N.C.

1-18

ROADWAY STANDARD DRAWING FOR
**GUARDRAIL INSTALLATION**

**NOTE: IF EXISTING GUARDRAIL IS LOWER THAN 1′-11″, USE AN ADDITIONAL 12′-6″ LONG SECTION OF GUARDRAIL, FOR EVERY 1″ OF HEIGHT DIFFERENCE, TO TRANSITION FROM EXISTING GUARDRAIL TO PROPOSED 2′-1″ GUARDRAIL.**

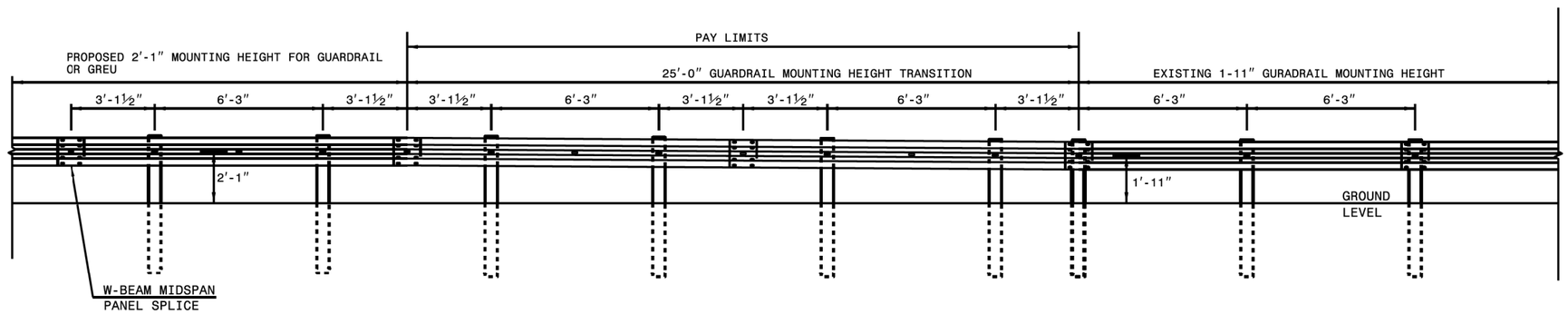


**ELEVATION VIEW**

## TRANSITION FROM OR 1′-11″ TO 2′-1″ W-BEAM GUARDRAIL MOUNTING HEIGHT


STATE OF
NORTH CAROLINA
DEPT. OF TRANSPORTATION
DIVISION OF HIGHWAYS
RALEIGH, N.C.

1-18

ROADWAY STANDARD DRAWING FOR
**GUARDRAIL INSTALLATION**

STATE OF
NORTH CAROLINA
DEPT. OF TRANSPORTATION
DIVISION OF HIGHWAYS
RALEIGH, N.C.

1-18

ROADWAY STANDARD DRAWING FOR
**GUARDRAIL INSTALLATION**

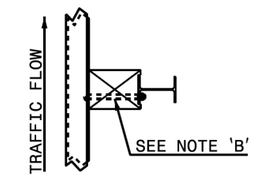


'W6' STEEL POST WITH
ROUTED OFFSET BLOCK

**PLAN**

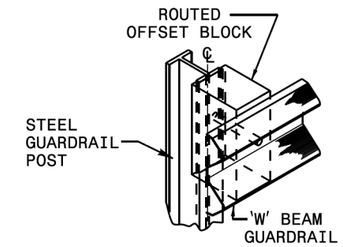


**ISOMETRIC VIEW**

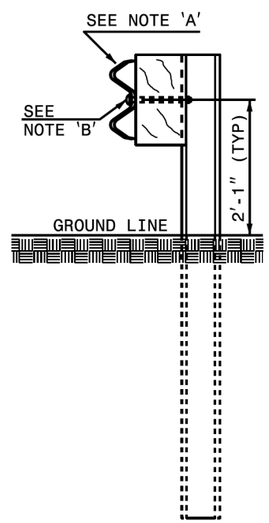


'W6' STEEL POST WITH
ROUTED OFFSET BLOCK

**SIDE**

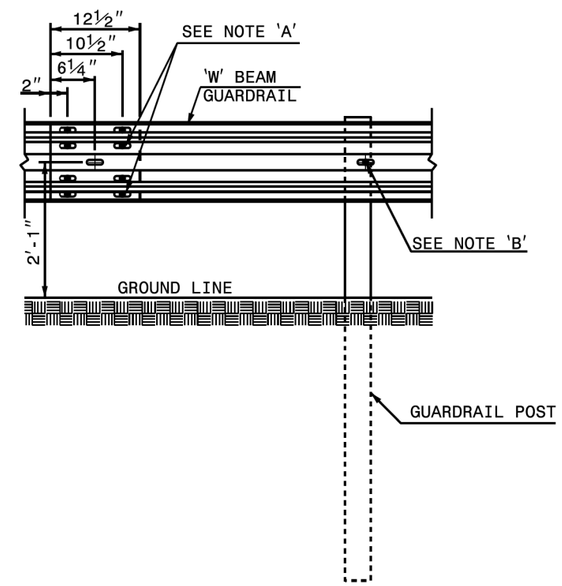


**FRONT - MID SPAN SPLICE**

NOTES:
A - ⅝" DIA. BUTTON HEAD SPLICE BOLT 1¼" LONG (8 REQ. PER SPLICE JOINT).
B - ⅝" DIA. BUTTON HEAD BOLT 7½"/9" LONG WITH NUT FOR BOLTING 6"/8" ROUTED OFFSET BLOCK TO STEEL POSTS.
C - FIELD PUNCHING OF HOLES INTO GUARDRAIL AS DIRECTED BY THE ENGINEER.

**TYPICAL GUARDRAIL AND GUARDRAIL POST ALTERNATIVES**


STATE OF
NORTH CAROLINA
DEPT. OF TRANSPORTATION
DIVISION OF HIGHWAYS
RALEIGH, N.C.

1-18

ROADWAY STANDARD DRAWING FOR
**GUARDRAIL INSTALLATION**

| PROJECT REFERENCE NO. | SHEET NO. |
|---|---|
| W-5601DU | 2C-18 |

STD. DRAWING 862.02

STATE OF
NORTH CAROLINA
DEPT. OF TRANSPORTATION
DIVISION OF HIGHWAYS
RALEIGH, N.C.

1-18

ROADWAY STANDARD DRAWING FOR
**GUARDRAIL INSTALLATION**

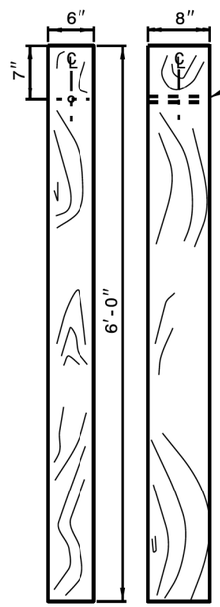


**STANDARD LINE POST**

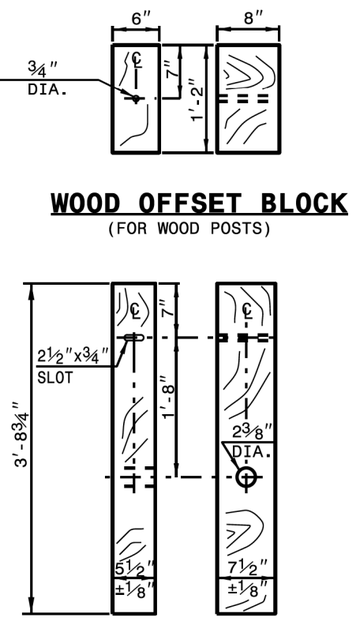


**WOOD OFFSET BLOCK**
(FOR WOOD POSTS)

**SHORT WOOD BREAKAWAY POST**

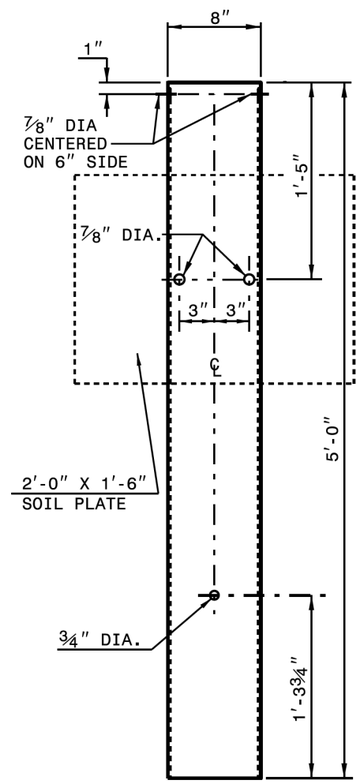


**STEEL TUBE**
TS 6"x8"x0.1875"

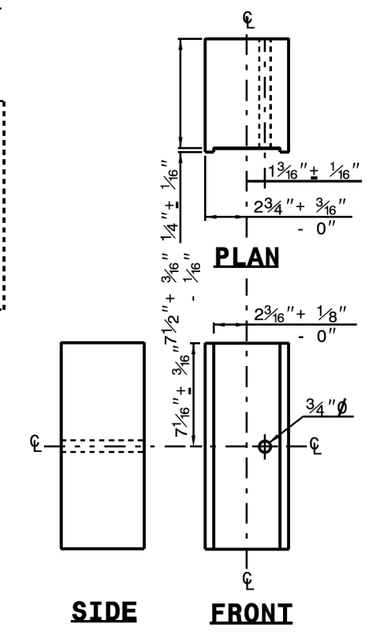


**ROUTED OFFSET BLOCK**

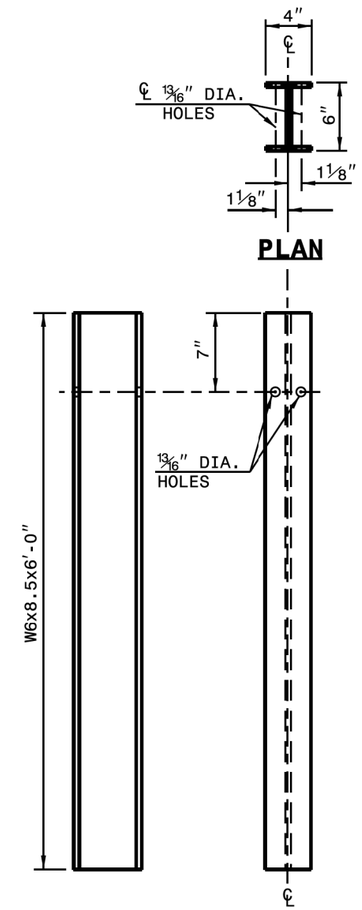


**"W6" STEEL POST**

## SYSTEM PARTS

SHEET 6 OF 8
**862.02**

STATE OF
NORTH CAROLINA
DEPT. OF TRANSPORTATION
DIVISION OF HIGHWAYS
RALEIGH, N.C.

1-18

ROADWAY STANDARD DRAWING FOR
**GUARDRAIL INSTALLATION**

SHEET 6 OF 8
**862.02**

| PROJECT REFERENCE NO. | SHEET NO. |
|---|---|
| W-5601DU | 2C-19 |

STD. DRAWING 862.02

STATE OF NORTH CAROLINA
DEPT. OF TRANSPORTATION
DIVISION OF HIGHWAYS
RALEIGH, N.C.

1-18

ROADWAY STANDARD DRAWING FOR
**GUARDRAIL INSTALLATION**

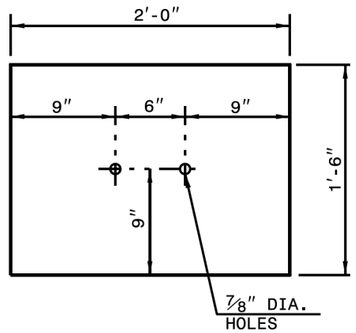


**SOIL PLATE**

1/4" THICK PLATE

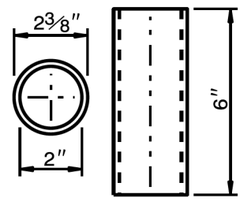


**BREAKAWAY TERMINAL POST SLEEVE**

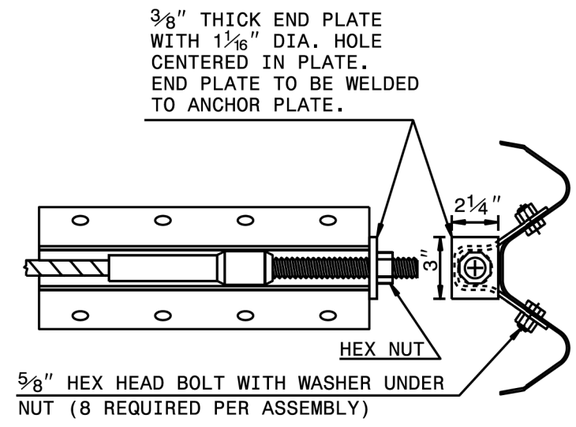


**ANCHOR PLATE ASSEMBLY**

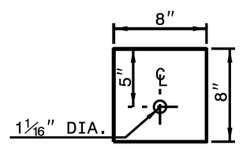


**BEARING PLATE**

5/8" THICK PLATE

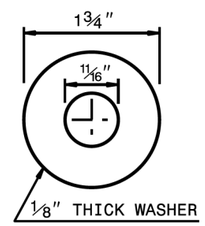


**DETAIL OF STANDARD WASHER**

STANDARD WASHER: TYPICAL USE UNDER NUT WITH WOOD POST

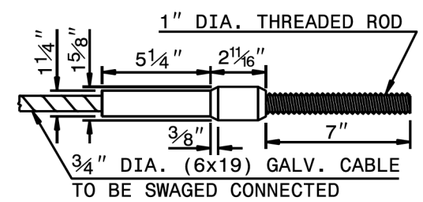


**SWAGED CABLE**

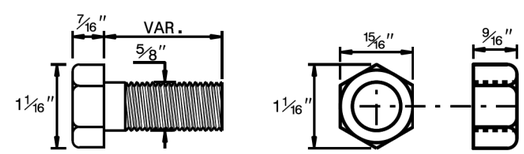


**DETAIL OF STANDARD HEX BOLT AND NUT**

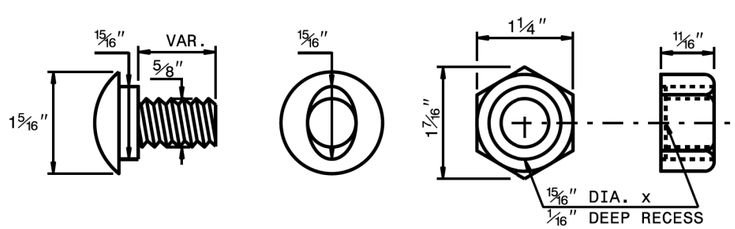


**DETAIL OF BUTTON HEAD BOLT AND NUT**

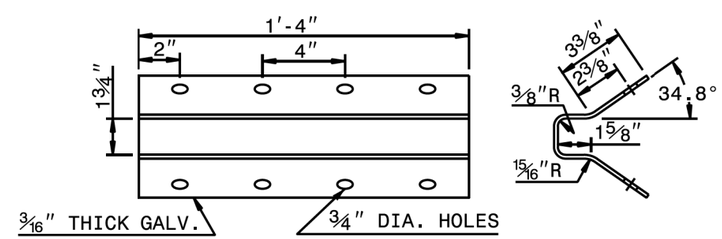


**ANCHOR PLATE**

**CABLE ASSEMBLY**

**SYSTEM PARTS**

STATE OF NORTH CAROLINA
DEPT. OF TRANSPORTATION
DIVISION OF HIGHWAYS
RALEIGH, N.C.

1-18

ROADWAY STANDARD DRAWING FOR
**GUARDRAIL INSTALLATION**



SHEET 7 OF 8
862.02

| PROJECT REFERENCE NO. | SHEET NO. |
|---|---|
| W-5601DU | 2C-20 |

STD. DRAWING 862.02

STATE OF
NORTH CAROLINA
DEPT. OF TRANSPORTATION
DIVISION OF HIGHWAYS
RALEIGH, N.C.

1-18

ROADWAY STANDARD DRAWING FOR
**GUARDRAIL INSTALLATION**

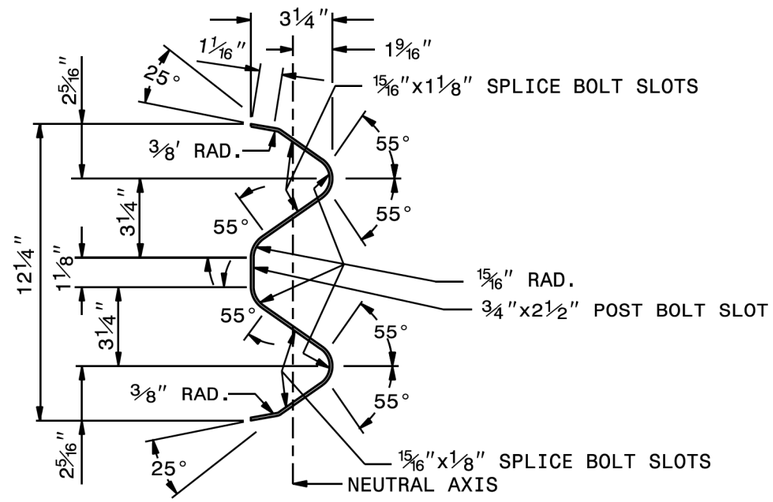


**SECTION X-X**

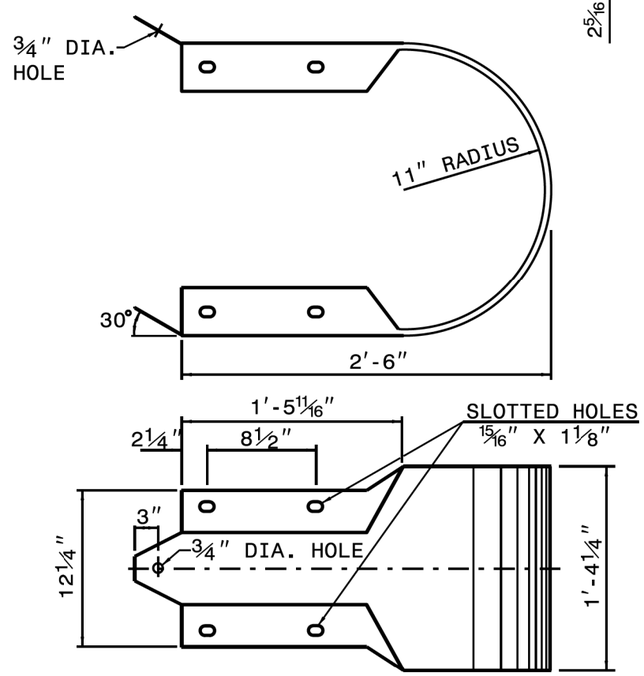


**BUFFERED END SECTION**

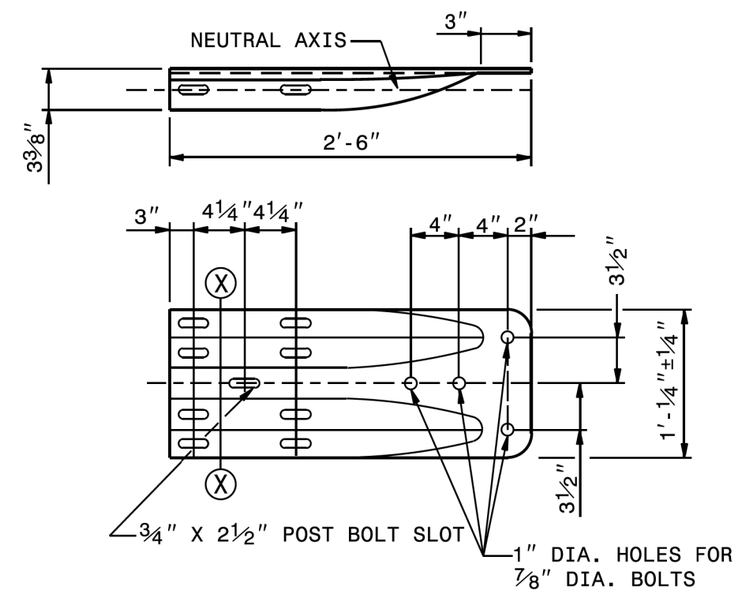


**TYPICAL END SHOE**

**SYSTEM PARTS - GENERAL USE**

STATE OF
NORTH CAROLINA
DEPT. OF TRANSPORTATION
DIVISION OF HIGHWAYS
RALEIGH, N.C.

1-18

ROADWAY STANDARD DRAWING FOR
**GUARDRAIL INSTALLATION**

SHEET 8 OF 8
**862.02**

SHEET 8 OF 8
**862.02**

STATE OF NORTH CAROLINA
DEPT. OF TRANSPORTATION
DIVISION OF HIGHWAYS
RALEIGH, N.C.

1-18

ROADWAY STANDARD DRAWING FOR
**STRUCTURE ANCHOR UNITS**
GUARDRAIL ANCHOR UNIT, TYPE III
FOR ATTACHMENT TO RAIL ON BRIDGE

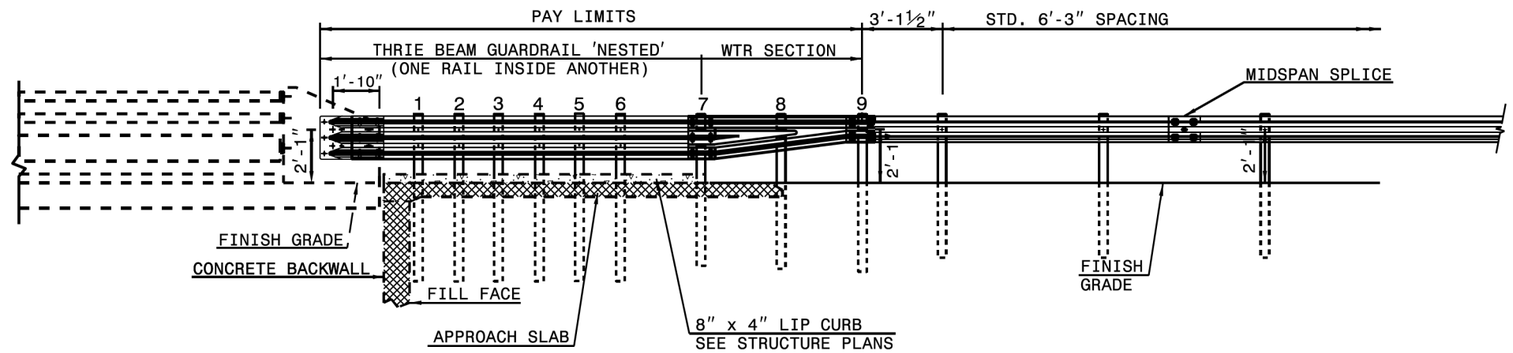


**ELEVATION**

NOTE:
- **POST NOT REQUIRED FOR SKEW ANGLES GREATER THAN 150° OR LESS THAN 30° UNLESS OTHERWISE DIRECTED BY THE ENGINEER.
- *THE DISTANCE FROM END OF BRIDGE RAIL TO CENTER LINE OF THE FIRST POST SHOULD BE 11½" IF CONCRETE BACKWALL IS NOT PRESENT.
- -SHOULDER BERM GUTTER MUST BE INSTALLED TO THE LIMITS 8" x 4" LIP CURB IS SHOWN IF ANCHOR UNIT IS NOT ADJACENT TO AN APPROACH SLAB.
- -MEASURE GUARDRAIL HEIGHT FROM THE TOP OF ADJACENT SURFACE (SHOULDER, BERM, OR GUTTER).
- -LAP JOINTS IN THE DIRECTION OF TRAFFIC FLOW.
- -SEE SHEET 5 FOR POST SECTIONS 1 THRU 9.

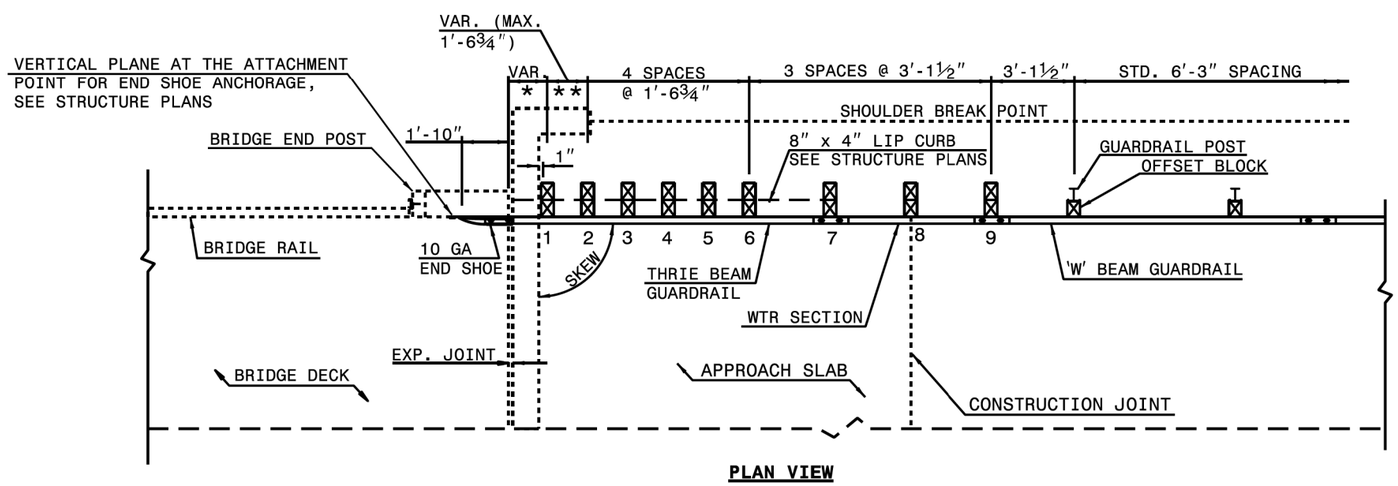


**PLAN VIEW**

## GUARDRAIL ANCHOR UNIT, TYPE III
## FOR ATTACHMENT TO RAIL ON BRIDGE


STATE OF NORTH CAROLINA
DEPT. OF TRANSPORTATION
DIVISION OF HIGHWAYS
RALEIGH, N.C.

1-18

ROADWAY STANDARD DRAWING FOR
**STRUCTURE ANCHOR UNITS**
GUARDRAIL ANCHOR UNIT, TYPE III
FOR ATTACHMENT TO RAIL ON BRIDGE

STATE OF NORTH CAROLINA
DEPT. OF TRANSPORTATION
DIVISION OF HIGHWAYS
RALEIGH, N.C.

1-18

ROADWAY STANDARD DRAWING FOR
**STRUCTURE ANCHOR UNITS**
GUARDRAIL ANCHOR UNIT, TYPE III FOR ATTACHMENT TO RAIL ON BRIDGE - SUB REGIONAL TIER

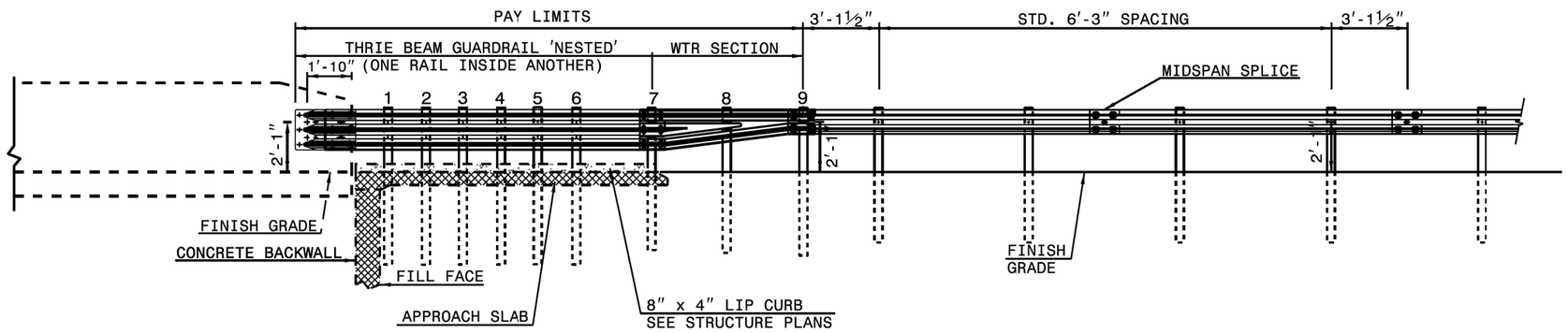


**ELEVATION**

NOTE:
**POST NOT REQUIRED FOR SKEW ANGLES GREATER THAN 150° OR LESS THAN 30° UNLESS OTHERWISE DIRECTED BY THE ENGINEER.
*THE DISTANCE FROM END OF BRIDGE RAIL TO CENTER LINE OF THE FIRST POST SHOULD BE 11½" IF CONCRETE BACKWALL IS NOT PRESENT.
-SHOULDER BERM GUTTER MUST BE INSTALLED TO THE LIMITS 8" x 4" LIP CURB IS SHOWN IF ANCHOR UNIT IS NOT ADJACENT TO AN APPROACH SLAB.
-MEASURE GUARDRAIL HEIGHT FROM THE TOP OF ADJACENT SURFACE (SHOULDER, BERM, OR GUTTER).
-LAP JOINTS IN THE DIRECTION OF TRAFFIC FLOW.
-SEE SHEET 5 FOR POST SECTIONS 1 THRU 9.

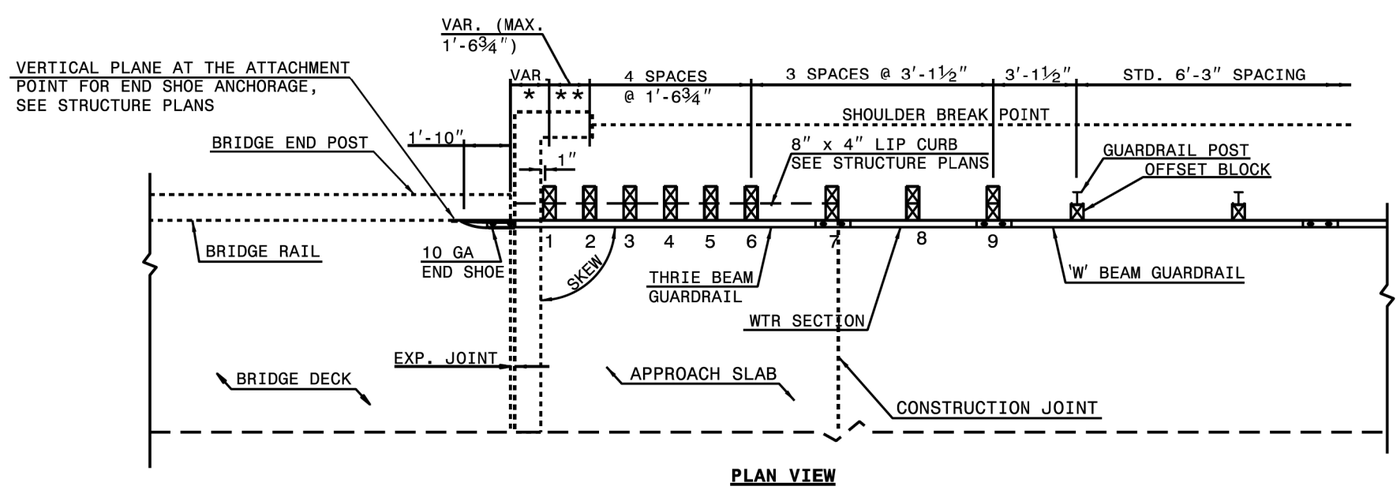


**PLAN VIEW**

## GUARDRAIL ANCHOR UNIT, TYPE III FOR ATTACHMENT TO RAIL ON BRIDGE - SUB REGIONAL TIER


STATE OF NORTH CAROLINA
DEPT. OF TRANSPORTATION
DIVISION OF HIGHWAYS
RALEIGH, N.C.

1-18

ROADWAY STANDARD DRAWING FOR
**STRUCTURE ANCHOR UNITS**
GUARDRAIL ANCHOR UNIT, TYPE III FOR ATTACHMENT TO RAIL ON BRIDGE - SUB REGIONAL TIER

| PROJECT REFERENCE NO. | SHEET NO. |
|---|---|
| W-5601DU | 2C-23 |

STD. DRAWING 862.03

STATE OF
NORTH CAROLINA
DEPT. OF TRANSPORTATION
DIVISION OF HIGHWAYS
RALEIGH, N.C.

1-18

ROADWAY STANDARD DRAWING FOR
**STRUCTURE ANCHOR UNITS**
GUARDRAIL ANCHOR UNIT, TYPE III

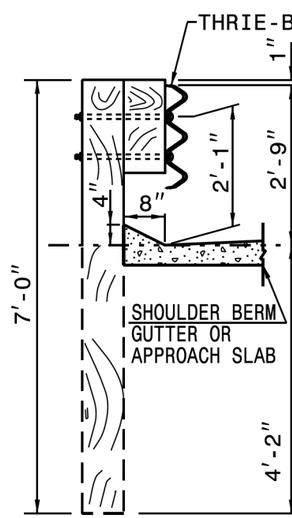


**SECTION OF THRIE BEAM POSTS 1 THRU 6**

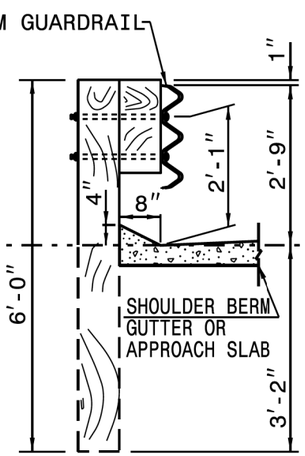


**SECTION OF THRIE BEAM POST 7**

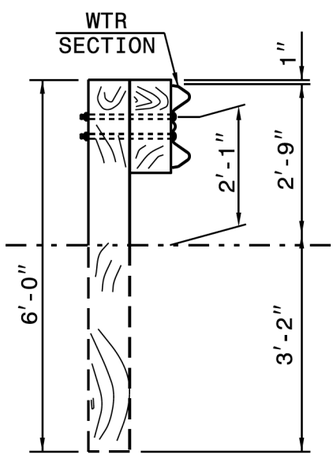


**SECTION OF WTR BEAM POST 8**

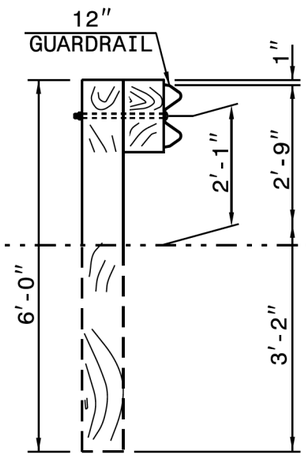


**SECTION OF 'W' BEAM POST 9**

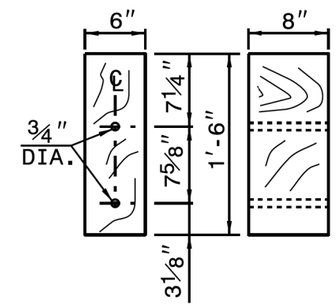


**THRIE BEAM OFFSET BLOCK**

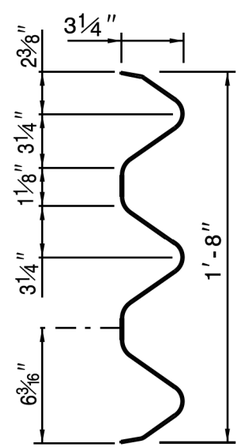


**THRIE-BEAM SECTION**

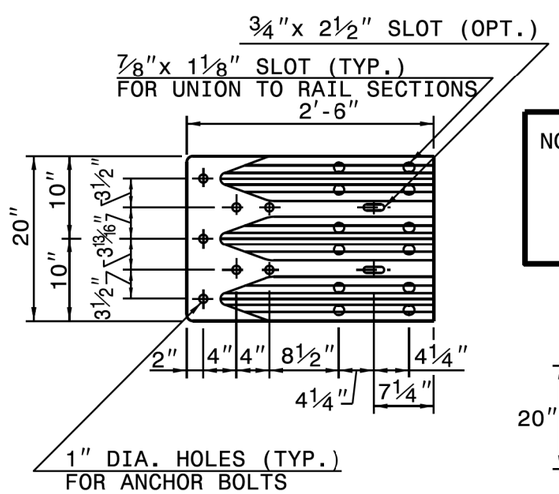


**END SHOE**

NOTE: THE MID POST AND OFFSET BLOCK OF THE WTR SECTION WILL REQUIRE SPECIAL BOLT HOLE DRILLING IN THE THRIE BEAM OFFSET BLOCK AND LINE POST.

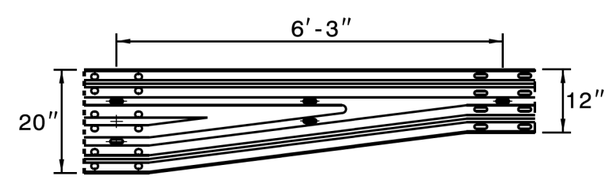


**WTR SECTION**
ELEVATION VIEW

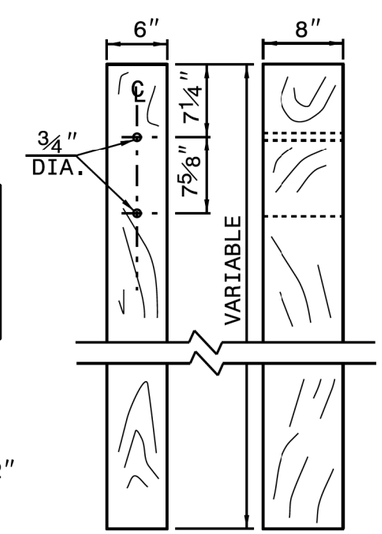


**THRIE BEAM LINE POST**

SHEET 3 OF 7
862.03

STATE OF
NORTH CAROLINA
DEPT. OF TRANSPORTATION
DIVISION OF HIGHWAYS
RALEIGH, N.C.

1-18

ROADWAY STANDARD DRAWING FOR
**STRUCTURE ANCHOR UNITS**
GUARDRAIL ANCHOR UNIT, TYPE III

SHEET 3 OF 7
862.03

STATE OF NORTH CAROLINA
DEPT. OF TRANSPORTATION
DIVISION OF HIGHWAYS
RALEIGH, N.C.

1-18

ROADWAY STANDARD DRAWING FOR
**GUARDRAIL ANCHOR UNIT**
GUARDRAIL ANCHOR UNIT TYPE B-77
FOR F-SHAPE BARRIER

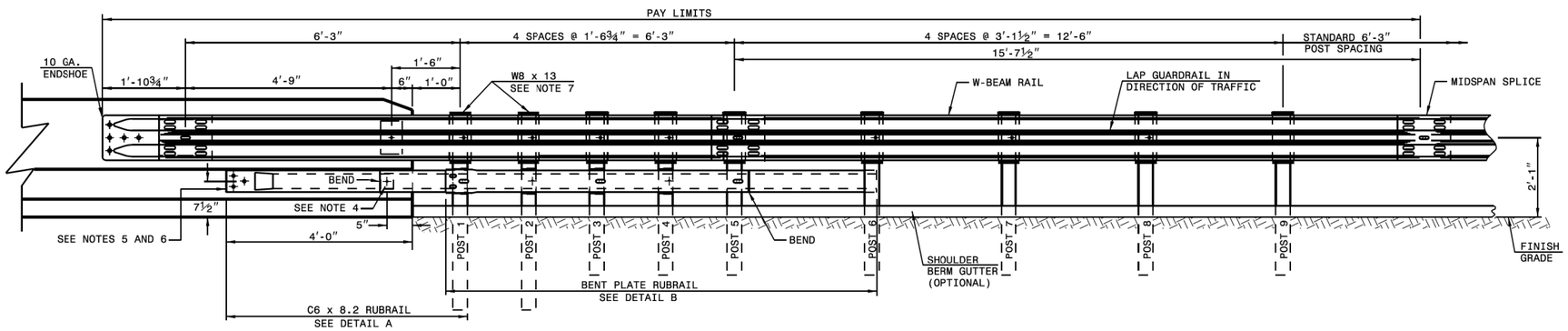


## ELEVATION

GENERAL NOTES:
1) POSTS 1 THROUGH 5 REQUIRE AN ADDITIONAL HOLE TO ATTACH LOWER BLOCKOUTS AND/OR RUBRAIL.
2) RUBRAIL BLOCKOUTS LOCATED ON POSTS 1 THROUGH 4 ARE OFFSET DRILLED AND SECURED WITH ⅝" BUTTONHEAD BOLTS (SEE CHART FOR BOLT LENGTHS). SECURE BLOCKS ONLY TO POSTS 2 AND 4. SECURE RUBRAIL AND BLOCKOUTS TO POSTS 1 AND 3. RUBRAIL IS SECURED TO POST 5 WITH A ⅝" x 4½" BUTTONHEAD BOLT. RUBRAIL IS FLARED TO BACK OF POST 6 AND NOT SECURED.
3) STEEL SPACER TUBE IS A SCHEDULE 40 GALVANIZED PIPE 6" INSIDE DIAMETER x 9" LONG. ATTACH TUBE TO GUARDRAIL ONLY WITH ⅝" x 1¼" LONG BUTTONHEAD BOLT AND RECTANGULAR PLATE WASHER.
4) SEE DETAIL D FOR SLOPED RUBRAIL BLOCKOUT. BLOCKOUT IS ATTACHED TO RAIL ELEMENT ONLY. USE ⅜" x 3" LAG BOLT WITH FLAT WASHER.
5) SHOP FABRICATE THE C6 x 8.2 RUBRAIL END TO BE CONSISTENT WITH THE SLOPE OF THE F SHAPE AND ATTACH FLUSH WITH THE SLOPED TOE OF THE BARRIER OR BRIDGE RAIL.
6) ANCHORAGE:
   (a) AT EXISTING BRIDGE RAIL AND NEW OR EXISTING BARRIERS, ANCHOR RUBRAIL USING THREE ⅝" x 6" CHEMICALLY ANCHORED BOLTS WITH WASHERS. MAXIMUM PROJECTION FOR BOLTS IS ½".
   (b) AT EXISTING BRIDGE RAIL AND NEW OR EXISTING BARRIERS, ANCHOR THE W-BEAM END SHOE USING A 4 BOLT HOLD DOWN PLATE (SEE STD. DWG. 862.04). A 4 BOLT INSERT ASSEMBLY IS ALLOWED ON PRECAST REINFORCED CONCRETE BARRIER (SEE STD. DWG. 857.01). INSTALL THE W-BEAM END SHOE BEHIND THE NESTED W-BEAM ELEMENTS.
   (c) AT NEW BRIDGE RAIL, ANCHOR THE W-BEAM END SHOE AND RUBRAIL AS DETAILED ON THE STRUCTURE PLANS.
7) POSTS 1 AND 2 ARE W8 x 13, 7'-6" LONG. ALL OTHER POSTS IN THE ANCHOR UNIT ARE W6 x 8.5.

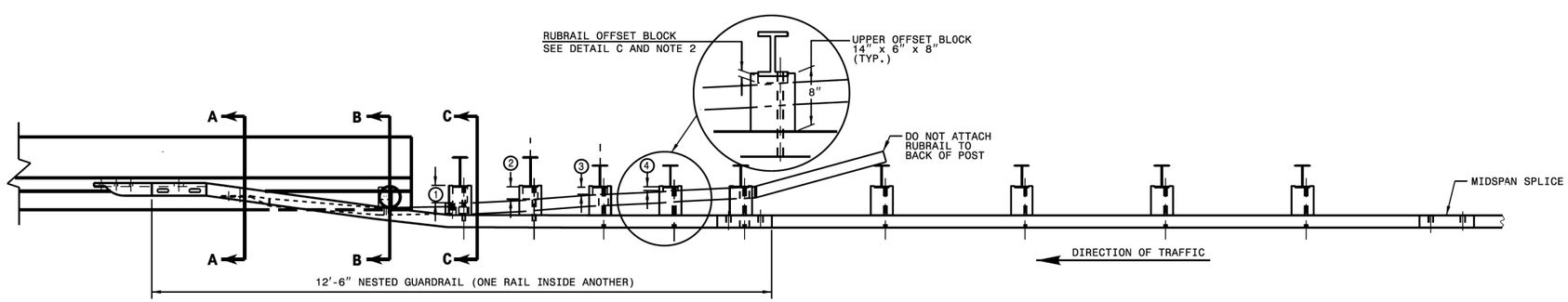


## PLAN

## GUARDRAIL ANCHOR UNIT TYPE B-77


STATE OF NORTH CAROLINA
DEPT. OF TRANSPORTATION
DIVISION OF HIGHWAYS
RALEIGH, N.C.

1-18

ROADWAY STANDARD DRAWING FOR
**STRUCTURE ANCHOR UNIT**
GUARDRAIL ANCHOR UNIT TYPE B-77
FOR F-SHAPE BARRIER

STATE OF NORTH CAROLINA
DEPT. OF TRANSPORTATION
DIVISION OF HIGHWAYS
RALEIGH, N.C.

1-18

ROADWAY STANDARD DRAWING FOR
**STRUCTURE ANCHOR UNIT**
GUARDRAIL ANCHOR UNIT TYPE B-77
FOR F-SHAPE BARRIER

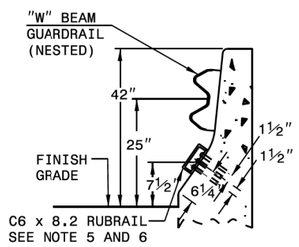


**SECTION A-A**

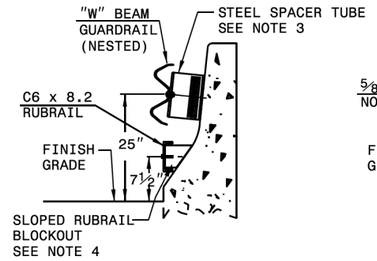


**SECTION B-B**

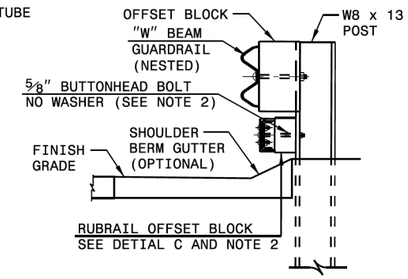


**SECTION C-C**

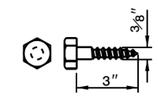


**DETAIL E**
**LAG BOLT**

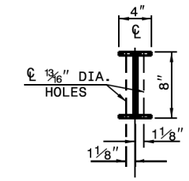


**PLAN**

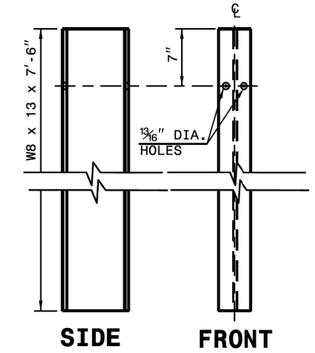


**DETAIL F STEEL POST**
**"W8 X 13 X 7'-6"**

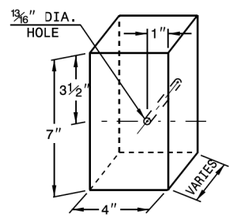


| RUBRAIL BLOCKS 7" HIGH x 4" WIDE | | |
|---|---|---|
| POST | THICKNESS | BOLT LENGTH |
| 1 | 4¼" | 9" |
| 2 | 3¼" | 5" * |
| 3 | 2" | 6" |
| 4 | 1" | 3" * |

* BOLTS FOR POSTS 2 AND 4 ARE USED TO ATTACH BLOCK TO POST. RUBRAIL NOT ATTACHED TO BLOCK.

**DETAIL C**
**RUBRAIL BLOCKOUT**

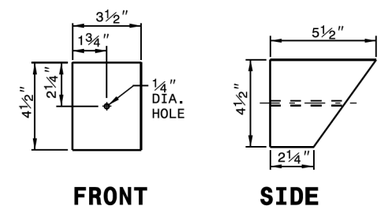


**DETAIL D**
**SLOPED RUBRAIL BLOCKOUT**

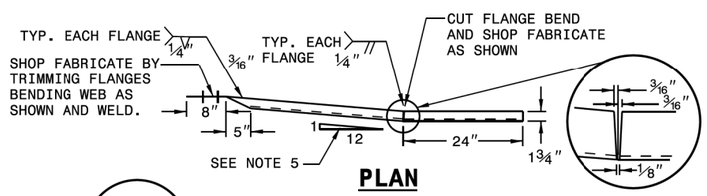


**PLAN**

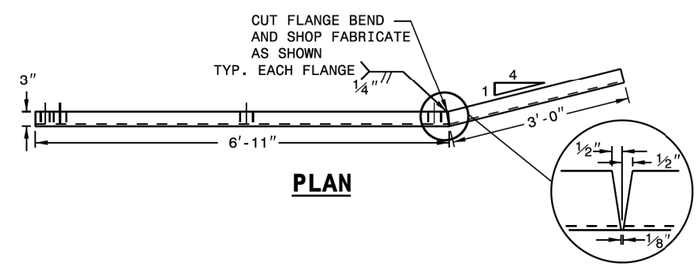


**PLAN**

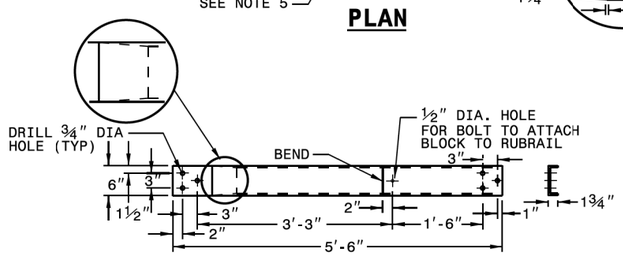


**ELEVATION**

**DETAIL A**
**C6 x 8.2 RUBRAIL**

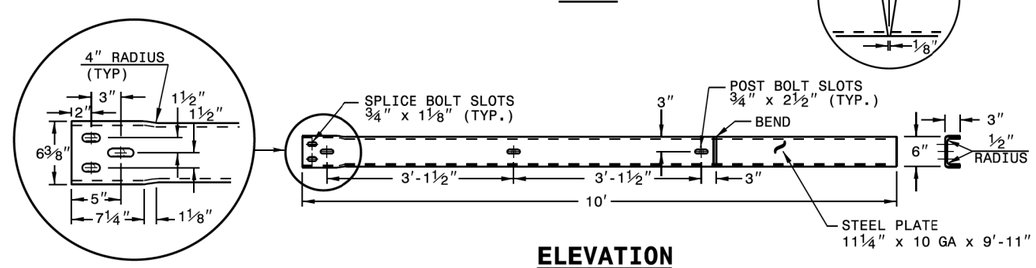


**ELEVATION**

**DETAIL B**
**BENT PLATE RUBRAIL**

## GUARDRAIL ANCHOR UNIT TYPE B-77


STATE OF NORTH CAROLINA
DEPT. OF TRANSPORTATION
DIVISION OF HIGHWAYS
RALEIGH, N.C.

1-18

ROADWAY STANDARD DRAWING FOR
**STRUCTURE ANCHOR UNIT**
GUARDRAIL ANCHOR UNIT TYPE B-77
FOR F-SHAPE BARRIER

STATE OF NORTH CAROLINA
DEPT. OF TRANSPORTATION
DIVISION OF HIGHWAYS
RALEIGH, N.C.

1-18

ROADWAY STANDARD DRAWING FOR
**STRUCTURE ANCHOR UNITS**
GUARDRAIL ANCHOR UNIT TYPE B-83

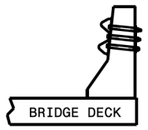


**SECTION A-A**

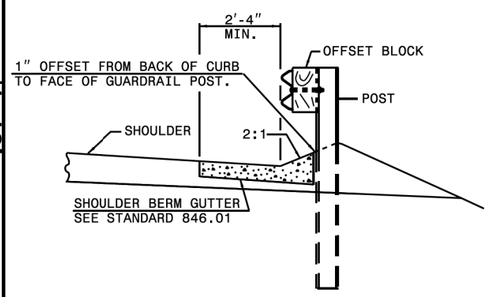


SEE STANDARD 820.04 FOR DRAINAGE INSTALLATION IN SHOULDER BERM GUTTER

**SECTION B-B**

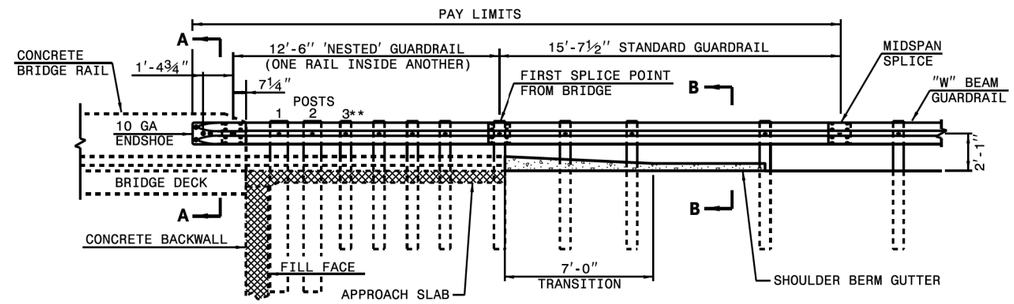


**ELEVATION VIEW**

NOTE:
**ELIMINATE POST 3 AND SHIFT POSTS 1 & 2 ON SKEW ANGLES GREATER THAN 150° OR LESS THAN 30° UNLESS OTHERWISE DIRECTED BY THE ENGINEER.
*THE DISTANCE FROM END OF BRIDGE RAIL TO CENTER LINE OF THE FIRST POST SHOULD BE 11½" IF CONCRETE BACKWALL IS NOT PRESENT.
-MEASURE GUARDRAIL HEIGHT FROM THE TOP OF ADJACENT SURFACE (SHOULDER, BERM, OR GUTTER).
-USE NO WOOD POSTS WITHIN THE GUARDRAIL ANCHOR UNIT LIMITS.
-LAP JOINTS IN THE DIRECTION OF TRAFFIC FLOW.
-POSTS 1 AND 2 TO BE W8 x 21 X 8'-0" LONG STEEL POST AND 8" X 8" X 14" WOOD ROUTED OFFSET BLOCK.
-SHOULDER BERM GUTTER IS REQUIRED IF NO CURBING EXISTS THROUGH ANCHOR UNIT PAY LIMITS.
-ANCHOR THE W-BEAM END SHOE USING A 4 BOLT HOLD DOWN PLATE AS SHOWN IN STANDARD 862.04

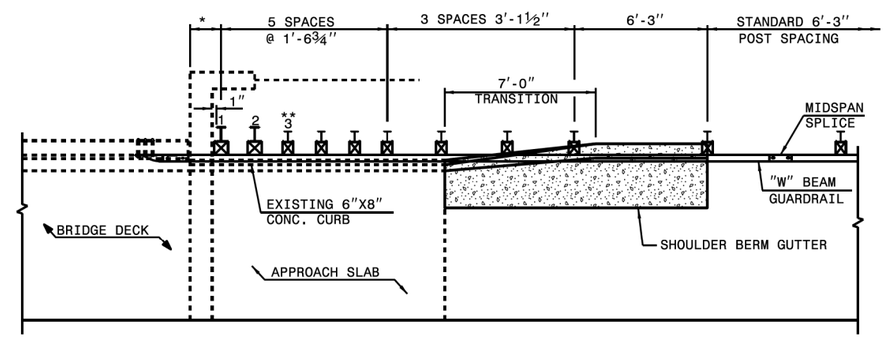


**PLAN VIEW**

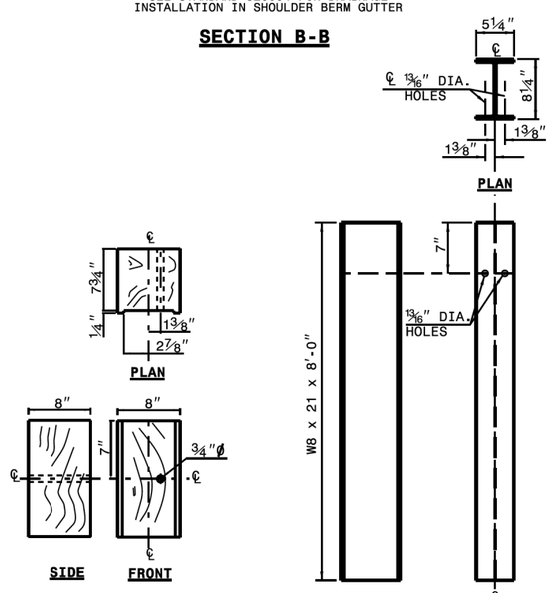


**8"X 8"X 14" ROUTED WOOD OFFSET BLOCK**

**"W8 X 21 X 8'-0" STEEL POST**

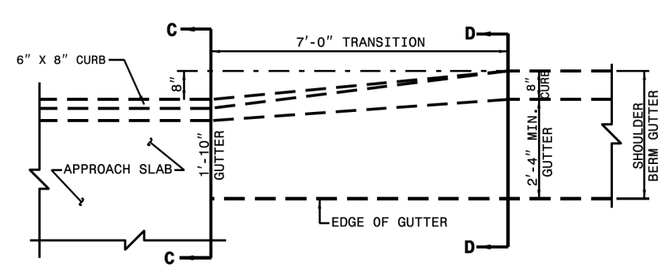


**TRANSITION APPROACH SLAB CURB TO SHOULDER BERM GUTTER**

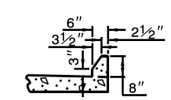


**SECTION C-C APPROACH SLAB CURB**

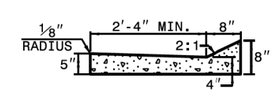


**SECTION D-D SHOULDER BERM GUTTER**

# GUARDRAIL ANCHOR UNIT TYPE B-83


STATE OF NORTH CAROLINA
DEPT. OF TRANSPORTATION
DIVISION OF HIGHWAYS
RALEIGH, N.C.

1-18

ROADWAY STANDARD DRAWING FOR
**STRUCTURE ANCHOR UNITS**
GUARDRAIL ANCHOR UNIT TYPE B-83

STATE OF NORTH CAROLINA
DEPT. OF TRANSPORTATION
DIVISION OF HIGHWAYS
RALEIGH, N.C.

1-18

ROADWAY STANDARD DRAWING FOR
**STRUCTURE ANCHOR UNITS**
ANCHORAGE FOR GUARDRAIL POST ON BOX CULVERT

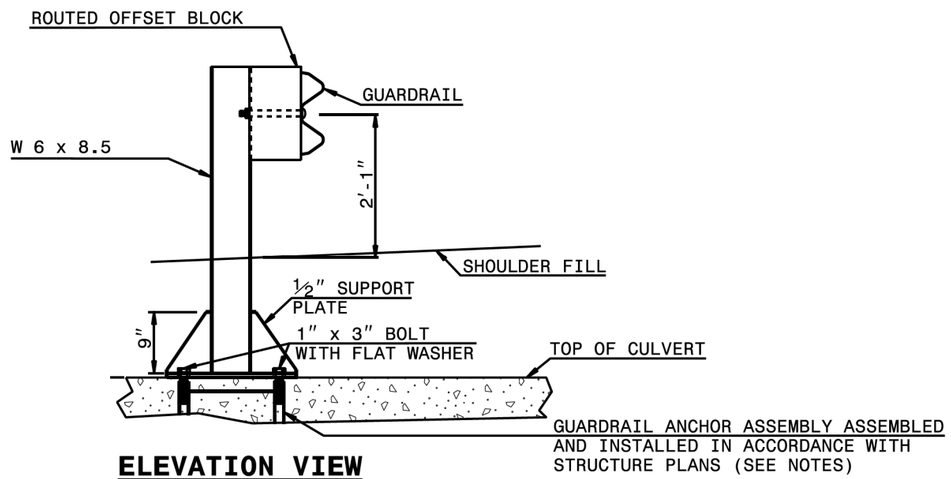


**ELEVATION VIEW**

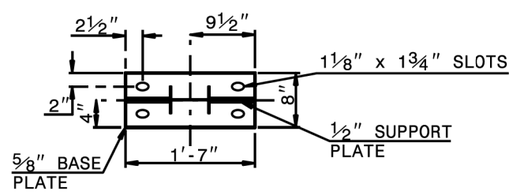


**PLAN VIEW**

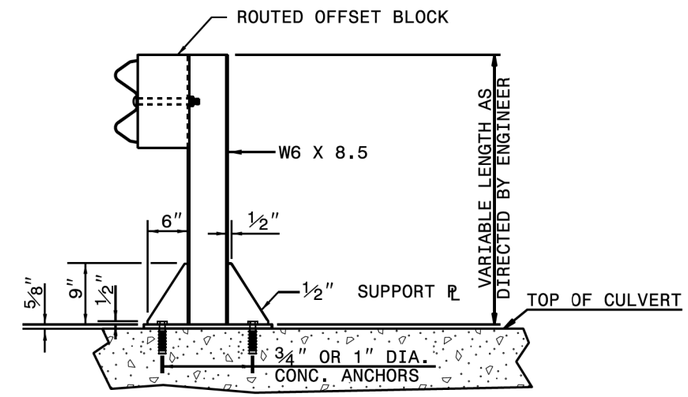


**ELEVATION VIEW**

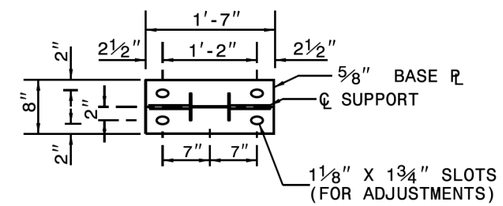


**PLAN VIEW**

NOTES FOR:
GUARDRAIL POST ANCHORED TO STRUCTURE:
- -USE FULL LENGTH ¼" BUTT WELDS AT ALL LOCATIONS OF CONTACT BETWEEN THE BASE PLATE, SUPPORT PLATES AND STEEL POST.
- -USE POST AND POST BASE PLATES CONFORMING TO THE REQUIREMENTS OF A.S.T.M. A-36 AND GALVANIZED AFTER FABRICATION TO CONFORM TO A.S.T.M. A-123.

NEW STRUCTURES:
- -ATTACH POST TO INSERT ASSEMBLY UNITS (USING ANCHOR BOLTS SUPPLIED WITH INSERTS) WHICH HAVE BEEN CAST INTO THE STRUCTURE DURING CONSTRUCTION.

EXISTING STRUCTURES:
- -USE CONCRETE ANCHORS CONSISTING OF A STUD BOLT WITH NUT AND WASHER. USE STUDS THREADED ON ONE END AND HAVING AN EXPANDED WEDGE ASSEMBLY POSITIONED AROUND A TAPERED AREA AT THE OTHER END. USE ANCHORS WHICH PROVIDE A MINIMUM SAFE HOLDING POWER OF 2875 LBS. FOR A ¾" OR 1" DIAMETER BOLT. CALCULATE HOLDING POWER BASED ON ¼ THE ACTUAL HOLDING POWER OF THE ANCHOR IN 3500 PSI CONCRETE AS DETERMINED BY AN APPROVED COMMERCIAL TESTING LABORATORY.

- -USE ANCHORS GALVANIZED IN ACCORDANCE WITH A.S.T.M. A-153. SIZE HOLES FOR THE CONCRETE ANCHORS IN ACCORDANCE WITH THE ANCHOR MANUFACTURER'S RECOMMENDATIONS. DRILL HOLES WITH A CARBIDE OR DIAMOND TIPPED MASONRY BIT POWERED BY A ROTARY OR ROTARY IMPACT DRILL. NO OTHER IMPACT TOOLS WILL BE PERMITTED. DRILL HOLES VERTICALLY. FURNISH DOCUMENTATION OF HOLE SIZE RECOMMENDED FOR THE SPECIFIED ANCHOR TO THE ENGINEER BEFORE DRILLING HOLES. THOROUGHLY CLEAN HOLES FOR ANCHORS OF ALL CONCRETE CHIPS, DUST, GREASE, OIL, ETC. BEFORE ANCHORS ARE INSTALLED. REPAIR ALL DAMAGE CAUSED BY THIS WORK TO THE SATISFACTION OF THE ENGINEER.

## ANCHORAGE FOR GUARDRAIL POST ON BOX CULVERT


STATE OF NORTH CAROLINA
DEPT. OF TRANSPORTATION
DIVISION OF HIGHWAYS
RALEIGH, N.C.

1-18

ROADWAY STANDARD DRAWING FOR
**STRUCTURE ANCHOR UNITS**
ANCHORAGE FOR GUARDRAIL POST ON BOX CULVERT

COMPUTED BY: BGS DATE: 5/01/2017
CHECKED BY: RCC DATE: 5/01/2017

STATE OF NORTH CAROLINA
DIVISION OF HIGHWAYS

| PROJECT REFERENCE NO. | SHEET NO. |
|---|---|
| W-5601DU | 3B-1 |

# US 276 – GUARDRAIL SUMMARY

| SITE NO. | BEG. STA. | END STA. | LOCATION | LENGTH | | | | WARRANT POINT | | "N" DIST. FROM E.O.L. | TOTAL SHOULDER WIDTH | FLARE LENGTH | | W | | ANCHORS | | | | | | PERMITTED | | | IMPACT ATTENUATOR TYPE 350 | REMOVE EXISTING GUARDRAIL | REMARKS |
|---|---|---|---|---|---|---|---|---|---|---|---|---|---|---|---|---|---|---|---|---|---|---|---|---|---|---|---|
| | | | | NUGUARD STRAIGHT | NUGUARD SHOP CURVED | STRAIGHT | SHOP CURVED | APPROACH END | TRAILING END | | | APPROACH END | TRAILING END | APPROACH END | TRAILING END | GREU TL-3 END UNIT | GREU CAT-1 END UNIT | GREU B-77 END UNIT | GRAU 350 END UNIT | AT-1 END UNIT | B-77 END UNIT | NO. | G | NG | | | |
| S1 | 584+81 | 607+00 | LT | | | 2125.0 | | | | | | | | | | 2 | | | | | | | | | | 1018.0 | |
| S2 | 561+90 | 564+12 | LT | | | 150.0 | | | | | | | | | | 1 | | 1 | | | | | | | | 216.0 | |
| S3 | 556+46 | 559+46 | LT | | | 225.0 | | | | | | | | | | 1 | | 1 | | | | | | | | 291.0 | |
| S4 | 539+45 | 540+70 | LT | | | 25.0 | | | | | | | | | | 2 | | | | | | | | | | | |
| S5 | 508+87 | 510+00 | LT | | | 12.5 | | | | | | | | | | 2 | | | | | | | | | | | |
| S6 | 485+00 | 486+50 | LT | | | 50.0 | | | | | | | | | | 2 | | | | | | | | | | | |
| S7 | 469+28 | 477+75 | LT | | | 750.0 | | | | | | | | | | 2 | | | | | | | | | | | POSSIBLE GUARDRAIL POST BOLTED TO BOX CULVERT |
| S8 | 453+50 | 458+38 | LT | | | 387.5 | | | | | | | | | | 2 | | | | | | | | | | 155.0 | |
| S9 | 437+08 | 438+37 | LT | | | 25.0 | | | | | | | | | | 2 | | | | | | | | | | | |
| S9B | 432+96 | 435+45 | LT | | | 150.0 | | | | | | | | | | 2 | | | | | | | | | | | POSSIBLE GUARDRAIL POST BOLTED TO BOX CULVERT |
| S10 | 427+75 | 431+00 | LT | | | 225.0 | | | | | | | | | | 2 | | | | | | | | | | 332.0 | |
| S11 | 424+92 | 427+15 | LT | | | 125.0 | | | | | | | | | | 2 | | | | | | | | | | 219.0 | |
| S12 | 417+50 | 423+64 | LT | | | 537.5 | 50.0 | | | | | | | | | 1 | 1 | | | | | | | | | 427.0 | |
| S13 | 410+50 | 413+00 | LT | | | 150.0 | | | | | | | | | | 2 | | | | | | | | | | | |
| S14 | 400+02 | 404+86 | LT | | | 387.5 | | | | | | | | | | 2 | | | | | | | | | | | |
| S15 | 378+30 | 394+19 | LT | | | 1562.5 | 25.0 | | | | | | | | | 1 | 1 | | | | | | | | | 1367.0 | |
| S16 | 361+08 | 377+00 | LT | | | 1512.5 | | | | | | | | | | 2 | | | | | | | | | | 1256.0 | |
| S17 | 355+88 | 359+82 | LT | | | 350.0 | 25.0 | | | | | | | | | 1 | 1 | | | | | | | | | 377.0 | |
| S18 | 303+60 | 339+41 | LT | | | 3500.0 | | | | | | | | | | 1 | 1 | | | | | | | | | 1898.0 | |
| S19 | 261+80 | 266+36 | LT | | | 325.0 | 25.0 | | | | | | | | | 2 | 2 | | | | | | | | | | LEAVE 8FT OPENING /DH24 |
| S20 | 243+00 | 244+50 | LT | | | 150.0 | | | | | | | | | | 2 | | | | | | | | | | | POSSIBLE GUARDRAIL SPAN |
| S21 | 144+53 | 145+80 | LT | | | 25.0 | | | | | | | | | | 2 | | | | | | | | | | | |
| PAGE TOTALS | | | | | | 12750.0 | 125.0 | | | | | | | | | 38 | 6 | 2 | | | | | | | | 7556.0 | |

COMPUTED BY: BGS DATE: 5/01/2017
CHECKED BY: RCC DATE: 5/01/2017

STATE OF NORTH CAROLINA
DIVISION OF HIGHWAYS

| PROJECT REFERENCE NO. | SHEET NO. |
|---|---|
| W-5601DU | 3B-2 |

# US 276 – GUARDRAIL SUMMARY

| SITE NO. | BEG. STA. | END STA. | LOCATION | LENGTH | | | | WARRANT POINT | | "N" DIST. FROM E.O.L. | TOTAL SHOULDER WIDTH | FLARE LENGTH | | W | | ANCHORS | | | | | | | | IMPACT ATTENUATOR TYPE 350 | REMOVE EXISTING GUARDRAIL | REMARKS |
|---|---|---|---|---|---|---|---|---|---|---|---|---|---|---|---|---|---|---|---|---|---|---|---|---|---|---|
| | | | | NUGUARD STRAIGHT | NUGUARD SHOP CURVED | STRAIGHT | SHOP CURVED | APPROACH END | TRAILING END | | | APPROACH END | TRAILING END | APPROACH END | TRAILING END | GREU TL-3 END UNIT | GREU CAT-1 END UNIT | GREU B-77 END UNIT | GRAU 350 END UNIT | AT-1 END UNIT | B-77 END UNIT | PERMITTED NO. | PERMITTED G | PERMITTED NG | | | |
| S21-B | 142+56 | 143+98 | LT | | | | | | | | | | | | | | | | | | | | | | | | NO GUARDRAIL AT THIS SITE |
| S22 | 37+14 | 44+10 | LT | | | 612.5 | | | | | | | | | | 2 | | | | | | | | | 725.0 | |
| S23 | 28+47 | 34+84 | LT | | | 537.5 | | | | | | | | | | 2 | | | | | | | | | 627.0 | |
| S24 | 24+44 | 27+13 | LT | | | 150.0 | | | | | | | | | | 2 | | | | | | | | | 228.0 | |
| S25 | 17+26 | 19+75 | RT | | | 150.0 | | | | | | | | | | 2 | | | | | | | | | 234.0 | |
| S26 | 25+15 | 26+88 | RT | | | 75.0 | | | | | | | | | | 2 | | | | | | | | | 170.0 | |
| S27 | 367+54 | 369+25 | RT | | | 75.0 | | | | | | | | | | 2 | | | | | | | | | | |
| S28 | 378+10 | 381+35 | RT | | | 225.0 | | | | | | | | | | 2 | | | | | | | | | | |
| S29 | 392+40 | 394+55 | RT | | | | | | | | | | | | | | | | | | | | | | | NO GUARDRAIL AT THIS SITE |
| S30 | 428+33 | 430+33 | RT | | | 100.0 | | | | | | | | | | 2 | | | | | | | | | | |
| S31 | 455+34 | 458+57 | RT | | | 225.0 | | | | | | | | | | 2 | | | | | | | | | 155.0 | POSSIBLE GUARDRAIL SPAN |
| S32 | 485+00 | 487+00 | RT | | | 100.0 | | | | | | | | | | 2 | | | | | | | | | | |
| S33 | 553+44 | 556+13 | RT | | | 187.5 | 25.0 | | | | | | | | | 1 | 1 | | | | | | | | | |
| S34 | 556+78 | 559+12 | RT | | | 200.0 | 50.0 | | | | | | | | | 1 | | 1 | | | | | | | 219.0 | |
| S35 | 561+43 | 563+72 | RT | | | 162.5 | | | | | | | | | | 1 | | 1 | | | | | | | 243.0 | |
| PAGE TOTALS | | | | | | 2800.0 | 75.0 | | | | | | | | | 23 | 1 | 2 | | | | | | | 2601.0 | |
| PROJECT TOTAL | | | | | | 1550.0 | 200.0 | | | | | | | | | 61 | 7 | 4 | | | | | | | 10157.0 | |

DIVISION OF HIGHWAYS
STATE OF NORTH CAROLINA

# *SUMMARY OF EARTHWORK*

***IN CUBIC YARDS***

| LOCATION | UNCLASSIFIED EXCAVATION | UNDERCUT | EMBT + % | BORROW | WASTE |
|---|---|---|---|---|---|
| SITE 4 (539 + 45 to 540 + 70) LEFT | | | | 2075.47 | |
| SITE 21 (144 + 53 to 145 + 80) LEFT | | | | 232.23 | |
| SITE 21B (142 + 56 to 143 + 98) LEFT | | | | 238.30 | |
| SITE 29 (392 + 40 to 394 + 55) RIGHT | | | | 2254.20 | |
| PROJECT TOTAL (CUBIC YARDS) | | | | 4835.01 | |

COMPUTED BY: BGS DATE: 5/02/2017
CHECKED BY: BCC DATE: 5/02/2017

PROJECT REFERENCE NO.
W-5601DU

SHEET NO.
3B-3