This electronic collection of documents is provided for the convenience of the user and is Not a Certified Document –

The documents contained herein were originally issued and sealed by the individuals whose names and license numbers appear on each page, on the dates appearing with their signature on that page.
This file or an individual page shall not be considered a certified document.

DocuSign Envelope ID: D25BF417-50CB-4E3D-B866-D685803946CC

BM#2: 8" SPIKE SET IN ROOT OF 20" POPLAR, STA. 21+54.76 -L- 78.22' RT.
ELEV. 2117.42

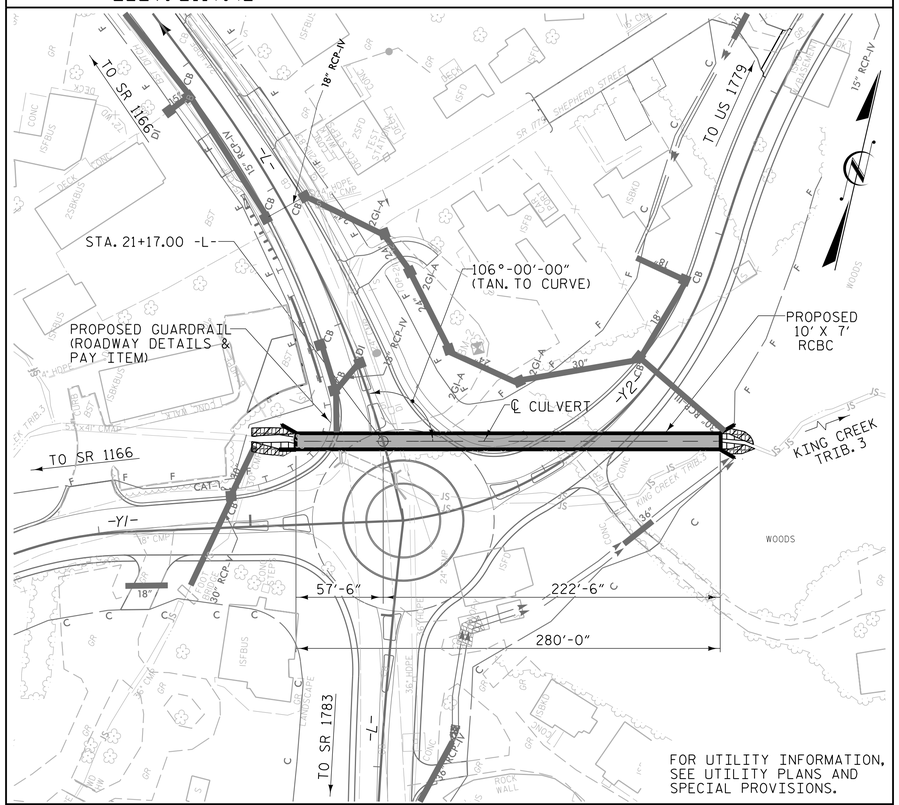

LOCATION SKETCH

GRADE DATA

GRADE POINT ELEV. @ STA. 21+17.00 -L- = 2120.18
BED ELEV. @ STA. 21+17.00 -L- = 2108.72
ROADWAY SLOPES 2:1

HYDRAULIC DATA

DESIGN DISCHARGE = 500 C.F.S.
FREQUENCY OF DESIGN FLOOD = 50 YRS.
DESIGN HIGH WATER ELEVATION = 2117.8 FT
DRAINAGE AREA = 0.33 SQ. MI.
BASE DISCHARGE (Q100) = 600 C.F.S.
BASE HIGH WATER ELEVATION = 2119.99 FT

OVERTOPPING FLOOD DATA

OVERTOPPING DISCHARGE = 705 C.F.S
FREQUENCY OF OVERTOPPING FLOOD = 100+ YRS.
OVERTOPPING FLOOD ELEVATION = 2120.3 FT

PROPOSED OVETOPPING OCCURS AT STA. 21+93 -L-

TOTAL STRUCTURE QUANTITIES

CLASS A CONCRETE			
BARREL @ 1.014 CY/FT	284.0	C.Y.	
WINGS, SILLS, ETC.	23.7	C.Y.	
TOTAL	307.7	C.Y.	
REINFORCING STEEL			
BARREL	47126	LBS.	
WINGS ETC.	1237	LBS.	
TOTAL	48363	LBS.	
CULVERT EXCAVATION STA. 21+17.00 -L-			LUMP SUM
FOUNDATION COND. MAT'L.			303 TONS
REMOVAL OF EXISTING STRUCTURE			LUMP SUM
NATIVE MATERIAL			140 TONS

I HEREBY CERTIFY THESE PLANS
ARE THE AS-BUILT PLANS

NOTES

ASSUMED LIVE LOAD ----------HL-93 OR ALTERNATE LOADING.

DESIGN FILL -L- ---------- 3.50'

DESIGN FILL -Y2- ---------- 6.60'

FOR OTHER DESIGN DATA AND NOTES SEE STANDARD NOTE SHEET.

3" Ø WEEP HOLES INDICATED TO BE IN ACCORDANCE WITH THE SPECIFICATIONS.

CONCRETE IN CULVERTS TO BE POURED IN THE FOLLOWING ORDER:

1. WING FOOTINGS AND FLOOR SLAB INCLUDING 4" OF ALL VERTICAL WALLS.
2. THE REMAINING PORTIONS OF THE WALLS AND WINGS FULL HEIGHT FOLLOWED BY ROOF SLAB AND HEADWALLS.

THE RESIDENT ENGINEER SHALL CHECK THE LENGTH OF CULVERT BEFORE STAKING IT OUT TO MAKE CERTAIN THAT IT WILL PROPERLY TAKE CARE OF THE FILL.

DIMENSIONS FOR WING LAYOUT AS WELL AS ADDITIONAL REINFORCING STEEL EMBEDDED IN BARREL ARE SHOWN ON WING SHEET.

TRANSVERSE CONSTRUCTION JOINTS SHALL BE USED IN THE BARREL, SPACED TO LIMIT THE POURS TO A MAXIMUM OF 70 FT. LOCATION OF JOINTS SHALL BE SUBJECT TO APPROVAL OF THE ENGINEER.

AT THE CONTRACTORS OPTION, HE MAY SPLICE THE VERTICAL REINFORCING STEEL IN THE INTERIOR FACE OF EXTERIOR WALL ABOVE LOWER WALL CONSTRUCTION JOINT. THE SPLICE LENGTH SHALL BE AS PROVIDED IN THE SPLICE LENGTH CHART SHOWN ON SHEET 6 OF 7 IN THE PLANS. EXTRA WEIGHT OF STEEL DUE TO THE SPLICES SHALL BE PAID FOR BY THE CONTRACTOR.

FOR CULVERT DIVERSION DETAILS AND PAY ITEM, SEE EROSION CONTROL PLANS.

A 3 FOOT STRIP OF FILTER FABRIC SHALL BE ATTACHED TO THE FILL FACE OF THE WING COVERING THE ENTIRE LENGTH OF THE EXPANSION JOINT.

AT THE CONTRACTOR'S OPTION HE MAY SUBMIT, TO THE ENGINEER FOR APPROVAL, DESIGN AND DETAIL DRAWINGS FOR A PRECAST REINFORCED CONCRETE BOX CULVERT IN LIEU OF THE CAST-IN-PLACE CULVERT SHOWN ON THE PLANS. THE DESIGN SHALL PROVIDE THE SAME SIZE AND NUMBER OF BARRELS AS USED ON THE CAST-IN-PLACE DESIGN. FOR OPTIONAL PRECAST REINFORCED CONCRETE BOX CULVERT, SEE SPECIAL PROVISIONS.

FOR SUBMITTAL OF WORKING DRAWINGS, SEE SPECIAL PROVISIONS.

FOR FALSEWORK AND FORMWORK, SEE SPECIAL PROVISIONS.

FOR CRANE SAFETY, SEE SPECIAL PROVISIONS.

FOR GROUT FOR STRUCTURES, SEE SPECIAL PROVISIONS.

FOUNDATION NOTES

EXCAVATE A MINIMUM OF 1.0 FEET BELOW BEARING ELEVATION AND REPLACE WITH FOUNDATION CONDITIONING MATERIAL PER SECTION 414 OF THE STANDARD SPECIFICATIONS.

OVEREXCAVATE LOOSE/SOFT MATERIAL IF PRESENT TO SUITABLE BEARING MATERIALS AND REPLACE WITH ADDITIONAL CLASS VI FOUNDATION CONDITIONING MATERIAL.

IF SUITABLE BEARING MATERIALS ARE NOT PRESENT AFTER 3.0 FEET OF EXCAVATION, PLACE GEOTEXTILE FOR SOIL STABILIZATION IN ACCORDANCE WITH SECTION 270 OF THE STANDARD SPECIFICATIONS BEFORE REPLACING WITH ADDITIONAL CLASS VI FOUNDATION CONDITIONING MATERIAL.

CONSTRUCT THE REINFORCED BOX CULVERT AT STATION 21+17 -L- WITH 2" OF CAMBER TO ACCOUNT FOR ANTICIPATED SETTLEMENT.

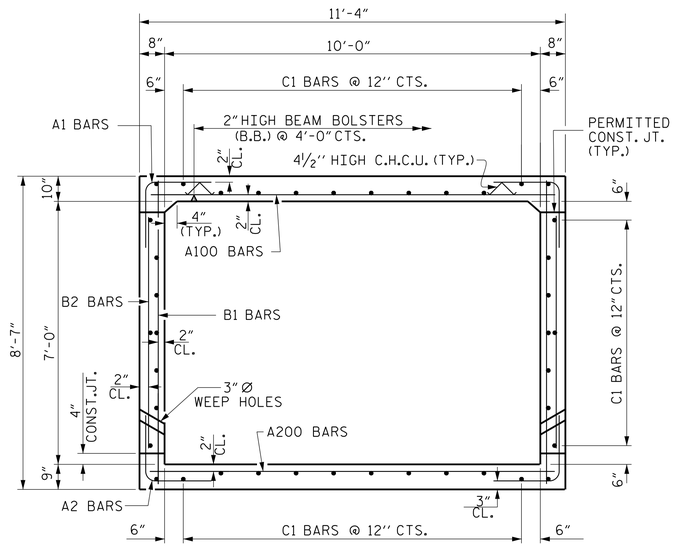

RIGHT ANGLE SECTION OF BARREL

THERE ARE 40 "C" BARS IN SECTION OF BARREL

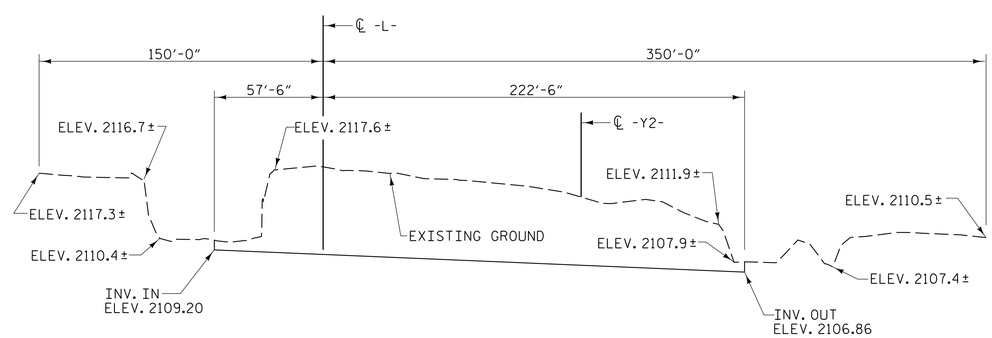

PROFILE ALONG ℄ CULVERT

PROJECT NO. U-5105
HENDERSON COUNTY
STATION: 21+17.00 -L-

SHEET 1 OF 7

STATE OF NORTH CAROLINA
DEPARTMENT OF TRANSPORTATION
RALEIGH

SINGLE BARREL
10 FT. X 7 FT.
CONCRETE BOX CULVERT
106° SKEW

NORTH CAROLINA PROFESSIONAL SEAL ENGINEER KEVIN AUSTIN
DocuSigned by: L. Kevin Austin 72B3720E9F9466...
2/27/2018

PLANS PREPARED BY:
CALYX ENGINEERS + CONSULTANTS
6750 TRYON ROAD
CARY, NC 27518
phone: 919.851.1912
CALYXengineers.com
NC License # F-1333

DOCUMENT NOT CONSIDERED FINAL
UNLESS ALL SIGNATURES COMPLETED

REVISIONS						SHEET NO.
NO.	BY:	DATE:	NO.	BY:	DATE:	C-1
1			3			TOTAL SHEETS
2			4			7

DRAWN BY :	W. B. ALLEN	DATE :	1/17
CHECKED BY :	Z. H. BROWN	DATE :	2/17
DESIGN ENGINEER OF RECORD:	L. K. AUSTIN	DATE :	2/17

2/15/2018 11:33:25 AM R:\Structures\U-5105_SMU_COL_01.dgn

DocuSign Envelope ID: D25BF417-50CB-4E3D-B866-D685803946CC

LOAD AND RESISTANCE FACTOR RATING (LRFR) SUMMARY FOR REINFORCED CONCRETE BOX CULVERTS

LEVEL		VEHICLE	WEIGHT (W) (TONS)	CONTROLLING LOAD RATING (#)	MINIMUM RATING FACTORS (RF)	TONS = W × RF	STRENGTH I LIMIT STATE									COMMENT NUMBER
							LIVE-LOAD FACTORS (γ_{LL})	MOMENT				SHEAR				
								RATING FACTOR	BOX NO.	ELEMENT TYPE	DISTANCE FROM LEFT END OF ELEMENT (ft)	RATING FACTOR	BOX NO.	ELEMENT TYPE	DISTANCE FROM LEFT END OF ELEMENT (ft)	
DESIGN LOAD RATING		HL-93 (INVENTORY)	N/A	1	**1.06**	--	1.75	1.37	1	BOTTOM SLAB	5.667	**1.06**	1	BOTTOM SLAB	0.873	
		HL-93 (OPERATING)	N/A		1.37	--	1.35	1.78	1	BOTTOM SLAB	5.667	1.37	1	BOTTOM SLAB	0.873	
		HS-20 (INVENTORY)	36.000	2	**1.10**	39.60	1.75	1.43	1	BOTTOM SLAB	5.667	**1.10**	1	BOTTOM SLAB	0.873	
		HS-20 (OPERATING)	36.000		1.43	51.48	1.35	1.85	1	BOTTOM SLAB	5.667	1.43	1	BOTTOM SLAB	0.873	
LEGAL LOAD RATING	SINGLE VEHICLE (SV)	SNSH	13.500		1.43	19.31	1.40	1.85	1	BOTTOM SLAB	5.667	1.43	1	BOTTOM SLAB	0.873	
		SNGARBS2	20.000		1.43	28.60	1.40	1.85	1	BOTTOM SLAB	5.667	1.43	1	BOTTOM SLAB	0.873	
		SNAGRIS2	22.000		1.43	31.46	1.40	1.85	1	BOTTOM SLAB	5.667	1.43	1	BOTTOM SLAB	0.873	
		SNCOTTS3	27.250		1.43	38.97	1.40	1.85	1	BOTTOM SLAB	5.667	1.43	1	BOTTOM SLAB	0.873	
		SNAGGRS4	34.925		1.43	49.94	1.40	1.85	1	BOTTOM SLAB	5.667	1.43	1	BOTTOM SLAB	0.873	
		SNS5A	35.550		1.43	50.84	1.40	1.85	1	BOTTOM SLAB	5.667	1.43	1	BOTTOM SLAB	0.873	
		SNS6A	39.950		1.43	57.13	1.40	1.85	1	BOTTOM SLAB	5.667	1.43	1	BOTTOM SLAB	0.873	
		SNS7B	42.000		1.43	60.06	1.40	1.85	1	BOTTOM SLAB	5.667	1.43	1	BOTTOM SLAB	0.873	
	TRUCK TRACTOR SEMI-TRAILER (TTST)	TNAGRIT3	33.000		1.43	47.19	1.40	1.85	1	BOTTOM SLAB	5.667	1.43	1	BOTTOM SLAB	0.873	
		TNT4A	33.075		1.43	47.30	1.40	1.85	1	BOTTOM SLAB	5.667	1.43	1	BOTTOM SLAB	0.873	
		TNT6A	41.600		1.43	59.49	1.40	1.85	1	BOTTOM SLAB	5.667	1.43	1	BOTTOM SLAB	0.873	
		TNT7A	42.000		1.43	60.06	1.40	1.85	1	BOTTOM SLAB	5.667	1.43	1	BOTTOM SLAB	0.873	
		TNT7B	42.000		1.43	60.06	1.40	1.85	1	BOTTOM SLAB	5.667	1.43	1	BOTTOM SLAB	0.873	
		TNAGRIT4	43.000		1.43	61.49	1.40	1.85	1	BOTTOM SLAB	5.667	1.43	1	BOTTOM SLAB	0.873	
		TNAGT5A	45.000		1.43	64.35	1.40	1.85	1	BOTTOM SLAB	5.667	1.43	1	BOTTOM SLAB	0.873	
		TNAGT5B	45.000	3	**1.43**	64.35	1.40	1.85	1	BOTTOM SLAB	5.667	**1.43**	1	BOTTOM SLAB	0.873	

LOAD FACTORS:

DESIGN LOAD RATING FACTORS

LOAD TYPE	MAX FACTOR	MIN FACTOR
DC	1.25	0.90
DW	1.50	0.65
EV	1.30	0.90
EH	1.35	0.90
ES	1.35	0.90
LS	1.75	--
WA	1.00	--

NOTE:

RATING FACTORS ARE BASED ON THE STRENGTH I LIMIT STATE.

COMMENTS:

1.
2.
3.
4.

(#) CONTROLLING LOAD RATING

(1) DESIGN LOAD RATING (HL-93)

(2) DESIGN LOAD RATING (HS-20)

(3) LEGAL LOAD RATING **

** SEE CHART FOR VEHICLE TYPE

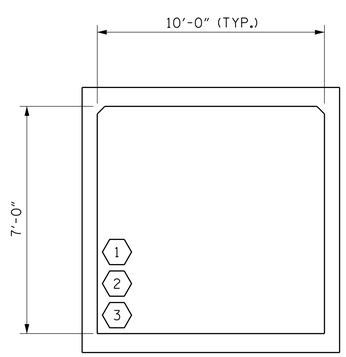

LRFR SUMMARY

(LOOKING DOWNSTREAM)

PROJECT NO. U-5105

HENDERSON COUNTY

STATION: 21+17.00 -L-

SHEET 2 OF 7

STATE OF NORTH CAROLINA
DEPARTMENT OF TRANSPORTATION
RALEIGH

STANDARD

LRFR SUMMARY FOR REINFORCED CONCRETE BOX CULVERTS
(NON-INTERSTATE TRAFFIC)

NORTH CAROLINA PROFESSIONAL ENGINEER SEAL KEVIN AUSTIN 027837 DocuSigned by: K. Kevin Austin 2/27/2018 2:15:00 PM EST

2/27/2018

PLANS PREPARED BY:

CALYX ENGINEERS + CONSULTANTS
6750 TRYON ROAD
CARY, NC 27518
phone: 919.851.1912
CALYXengineers.com
NC License # F-1333

DOCUMENT NOT CONSIDERED FINAL UNLESS ALL SIGNATURES COMPLETED

REVISIONS						SHEET NO.
NO.	BY:	DATE:	NO.	BY:	DATE:	C-2
1			3			TOTAL SHEETS 7
2			4			

STD. NO. LRFR5

ASSEMBLED BY : W. B. ALLEN DATE : 2/17
CHECKED BY : Z. H. BROWN DATE : 2/17
DRAWN BY : WMC 7/11
CHECKED BY : GM 7/11
REV. 10/1/11 MAA/GM

2/15/2018 11:33:27 AM R:\Structures\U-5105_SMU_CU_02.dgn

DocuSign Envelope ID: D25BF417-50CB-4E3D-B866-D685803946CC

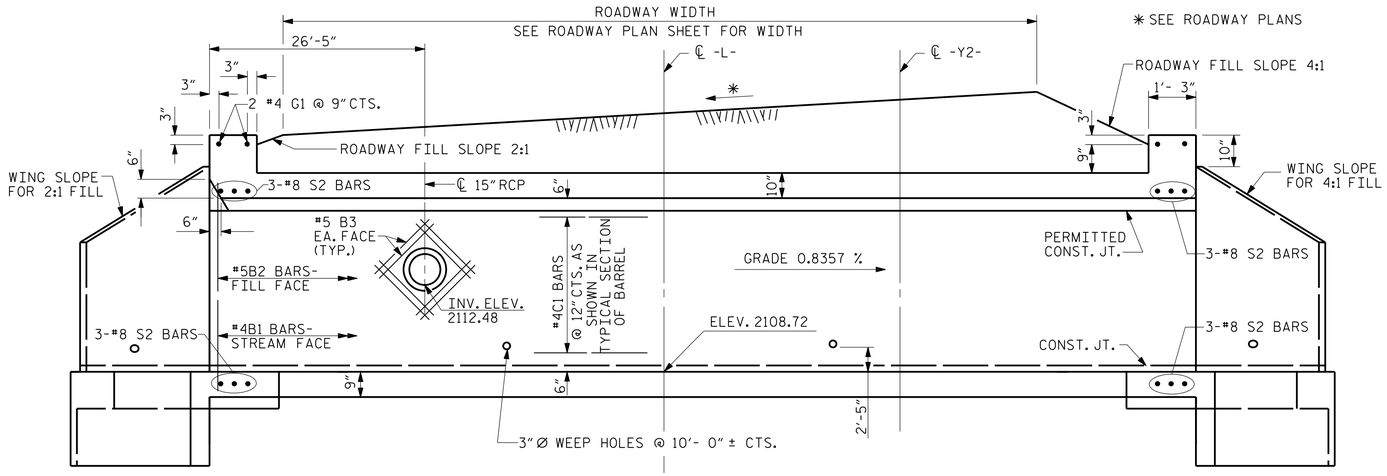

CULVERT SECTION NORMAL TO ROADWAY

NOTE:

CUT REINFORCING STEEL AS NECESSARY TO PROVIDE 2" MIN. CLEAR TO 15" RCP.

THE 15" Ø PIPE THROUGH THE SIDEWALL OF THE CULVERT SHALL BE LOCATED BY THE ENGINEER.

FOR DETAIL OF REINFORCING AROUND PIPE SEE SHEET 6 OF 7.

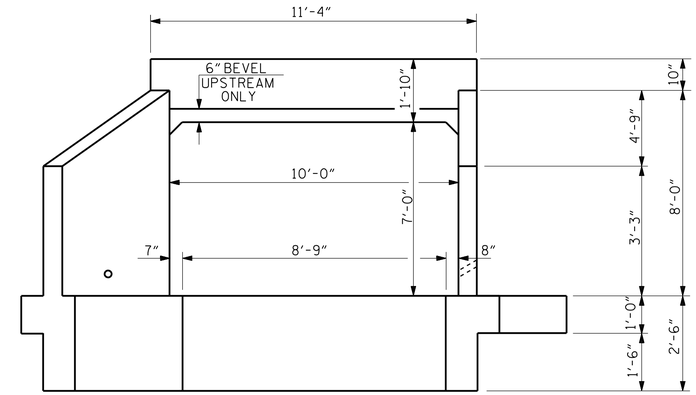

END ELEVATION

INLET END

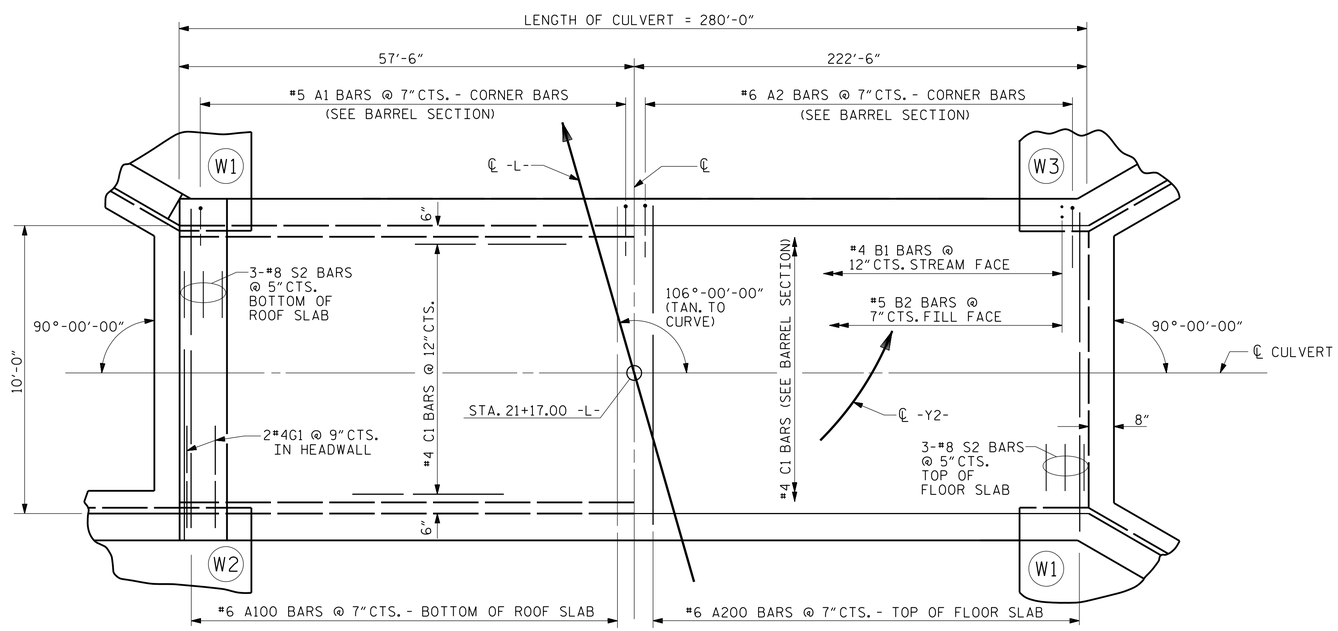

PART PLAN ROOF SLAB

PART PLAN FLOOR SLAB

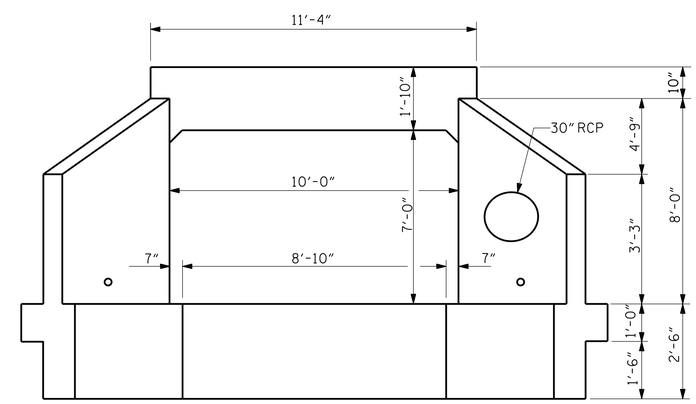

END ELEVATION

OUTLET END

PROJECT NO. U-5105

HENDERSON COUNTY

STATION: 21+17.00 -L-

SHEET 3 OF 7

STATE OF NORTH CAROLINA
DEPARTMENT OF TRANSPORTATION
RALEIGH

BARREL STANDARD SINGLE 10 FT. X 7 FT. CONCRETE BOX CULVERT 106° SKEW

1971

NORTH CAROLINA PROFESSIONAL ENGINEER L. KEVIN AUSTIN

Digitally signed by L. Kevin Austin
DN: cn=L. Kevin Austin, o=CALYX, ou=Engineering, email=kevin.austin@calyxengineers.com, c=US
Date: 2018.02.27 10:10:00 -05'00'

2/27/2018

PLANS PREPARED BY:

CALYX ENGINEERS + CONSULTANTS
6750 TRYON ROAD
CARY, NC 27518
phone: 919.851.1912
CALYXengineers.com
NC License # F-1333

DOCUMENT NOT CONSIDERED FINAL UNLESS ALL SIGNATURES COMPLETED

REVISIONS						
NO.	BY:	DATE:	NO.	BY:	DATE:	
1			3			
2			4			

SHEET NO. C-3

TOTAL SHEETS 7

STD. NO. CB11

ASSEMBLED BY : W. B. ALLEN	DATE : 1/17	SPECIAL	
CHECKED BY : Z. H. BROWN	DATE : 2/17		
DRAWN BY : R. WRIGHT	DATE : AUG. 1989	STANDARD	
CHECKED BY : A.R. BISSETTE	DATE : AUG. 1989		

REVISED 8-28-92 BY E.L.R. CHECKED BY G.R.P.
REVISED 8-22-89 BY A.R.B. CHECKED BY C.R.K.
REDRAWN 8-22-1989
REVISED 11-19-99 BY M.M. CHECKED BY R.W.W.

2/15/2018 11:33:28 AM R:\Structures\U-5105_SMU_CU_03.dgn

DocuSign Envelope ID: D25BF417-50CB-4E3D-B866-D685803946CC

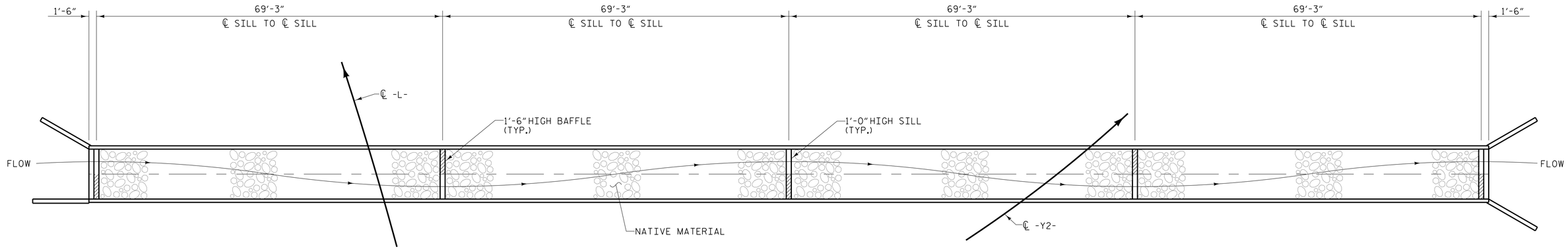

PLAN

NOTES:

BED MATERIAL PLACED BETWEEN SILLS IN THE CULVERT SHALL PROVIDE A CONTINUOUS LOW FLOW CHANNEL BETWEEN THE LOWER SILLS. THE MATERIAL SHALL BE NATIVE MATERIAL THAT IS EXCAVATED FROM THE STREAM BED AT THE PROJECT SITE DURING CULVERT CONSTRUCTION. STONES LARGER THAN 12 INCHES SHALL NOT BE PLACED WITHIN THE LOW FLOW CHANNEL. NATIVE MATERIAL IS SUBJECT TO APPROVAL BY THE ENGINEER AND MAY BE SUBJECT TO PERMIT CONDITIONS.

SILLS AND ALTERNATING BAFFLES ARE TO BE 1' WIDE AND CAST SEPERATELY AND ATTACHED BY DOWELS.

#6 'D' BARS ARE INCLUDED IN "REINFORCING STEEL" QUANTITY ON SHEET C-6.

SILL & BAFFLE CONCRETE QUANTITY IS INCLUDED IN CLASS 'A' CONCRETE ON SHEET C-6.

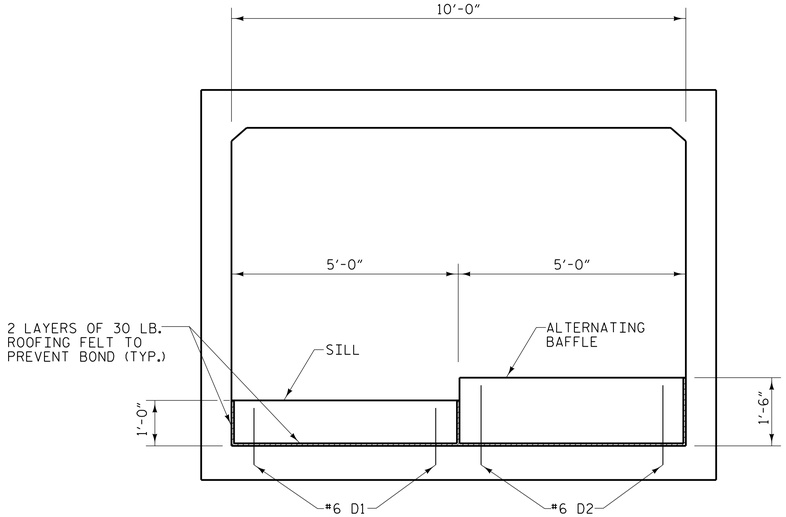

BARREL SECTION
(LOOKING DOWNSTREAM)

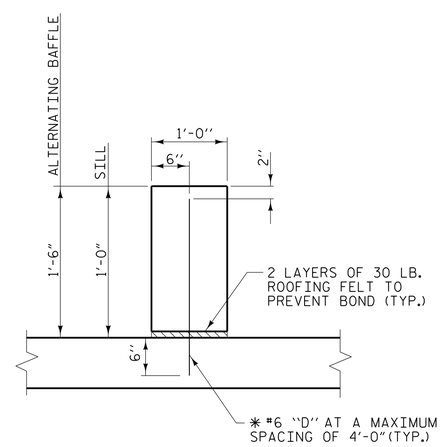

SECTION THROUGH SILL & ALTERNATING BAFFLE

✱ DOWELS MAY BE PUSHED INTO GREEN CONCRETE AFTER SLAB HAS BEEN FLOAT FINISHED.

SILL & BAFFLE DETAILS

PROJECT NO. U-5105
HENDERSON COUNTY
STATION: 21+17.00 -L-

SHEET 4 OF 7

NORTH CAROLINA ENGINEER L. KEVIN AUSTIN 2/27/2018
DocuSigned by: L. Kevin Austin
2/27/2018 | 3:30:57 PM PST

PLANS PREPARED BY:
CALYX ENGINEERS + CONSULTANTS
6750 TRYON ROAD
CARY, NC 27518
phone: 919.851.1912
CALYXengineers.com
NC License # F-1333

STATE OF NORTH CAROLINA
DEPARTMENT OF TRANSPORTATION
RALEIGH

SINGLE 10 FT. X 7 FT.
CONCRETE BOX CULVERT
106° SKEW
SILL DETAILS

REVISIONS						SHEET NO.
NO.	BY:	DATE:	NO.	BY:	DATE:	C-4
1			3			TOTAL SHEETS
2			4			7

DRAWN BY : W. B. ALLEN DATE : 2/17
CHECKED BY : Z. H. BROWN DATE : 2/17
DESIGN ENGINEER OF RECORD: L. K. AUSTIN DATE : 2/17

DOCUMENT NOT CONSIDERED FINAL UNLESS ALL SIGNATURES COMPLETED

2/5/2018 11:33:30 AM R:\Structures\U-5105_SMU_CU_04.dgn

DocuSign Envelope ID: D25BF417-50CB-4E3D-B866-D685803946CC

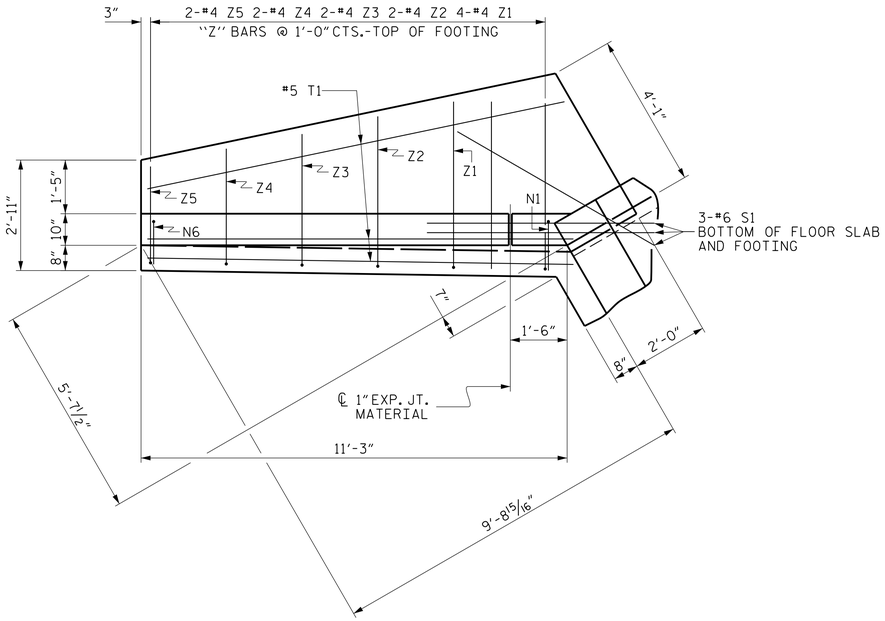

PLAN (W1)

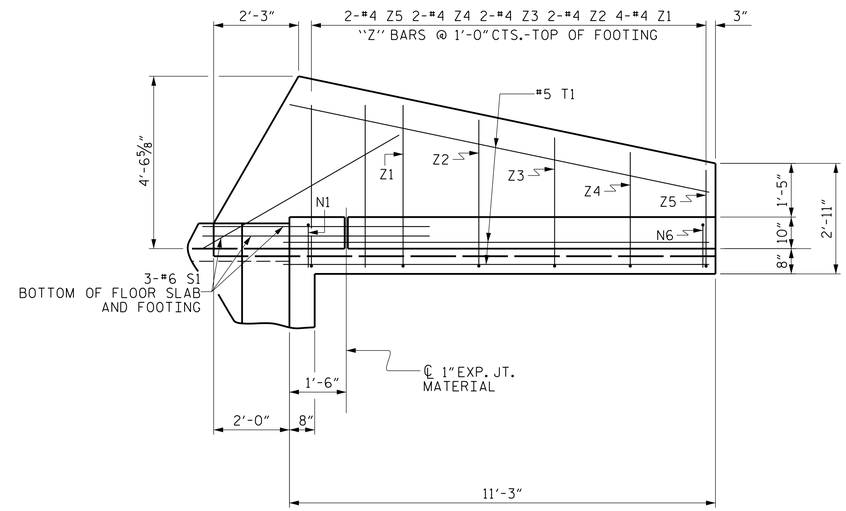

PLAN (W2)

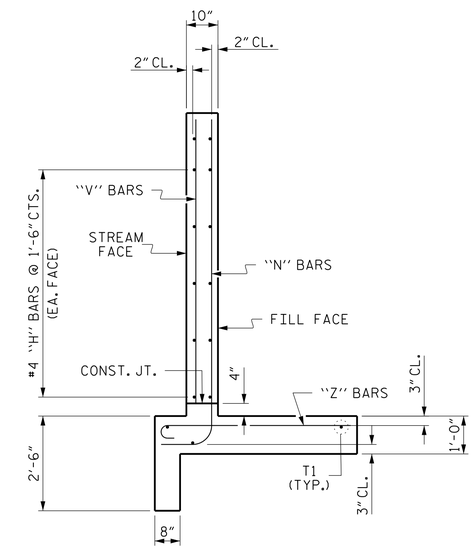

TYPICAL WING SECTION

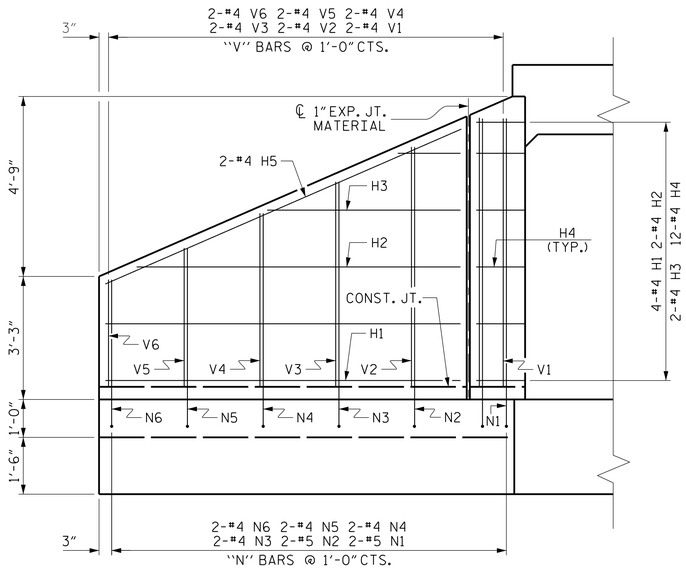

ELEVATION (W1)

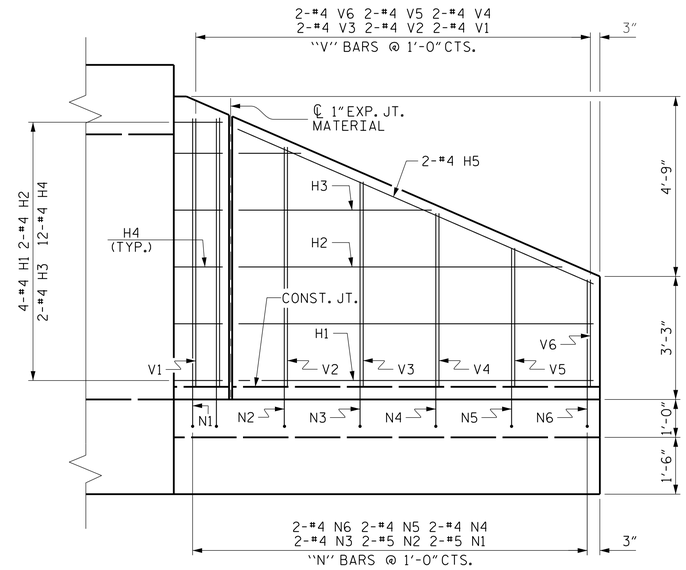

ELEVATION (W2)

PROJECT NO. U-5105

HENDERSON COUNTY

STATION: 21+17.00 -L-

SHEET 5 OF 7

STATE OF NORTH CAROLINA
DEPARTMENT OF TRANSPORTATION
RALEIGH

STANDARD WINGS FOR CONCRETE BOX CULVERT

H = 7'-0" SLOPE = 2:1

90° SKEW

NORTH CAROLINA PROFESSIONAL SEAL 029783 ENGINEER KEVIN AUSTIN
DocuSigned by: Kevin Austin
2/27/2018

PLANS PREPARED BY:

CALYX
ENGINEERS + CONSULTANTS
6750 TRYON ROAD
CARY, NC 27518
phone: 919.851.1912
CALYXengineers.com
NC License # F-1333

DOCUMENT NOT CONSIDERED FINAL UNLESS ALL SIGNATURES COMPLETED

REVISIONS						SHEET NO.
NO.	BY:	DATE:	NO.	BY:	DATE:	C-5
1			3			TOTAL SHEETS
2			4			7

STD. NO. CW9007

ASSEMBLED BY : W. B. ALLEN	DATE : 1/17	
CHECKED BY : Z. H. BROWN	DATE : 2/17	
DRAWN BY : CCJ	10/99	
CHECKED BY : RWW	03/00	

2/15/2018 11:33:31 AM R:\Structures\U-5105_SMU_CU_05.dgn

DocuSign Envelope ID: D25BF417-50CB-4E3D-B866-D685803946CC

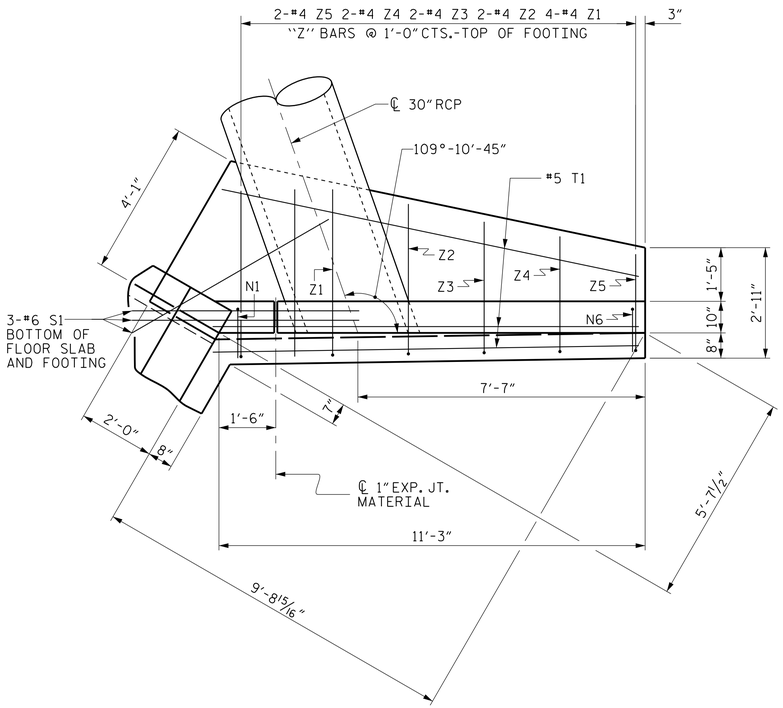

PLAN (W3)

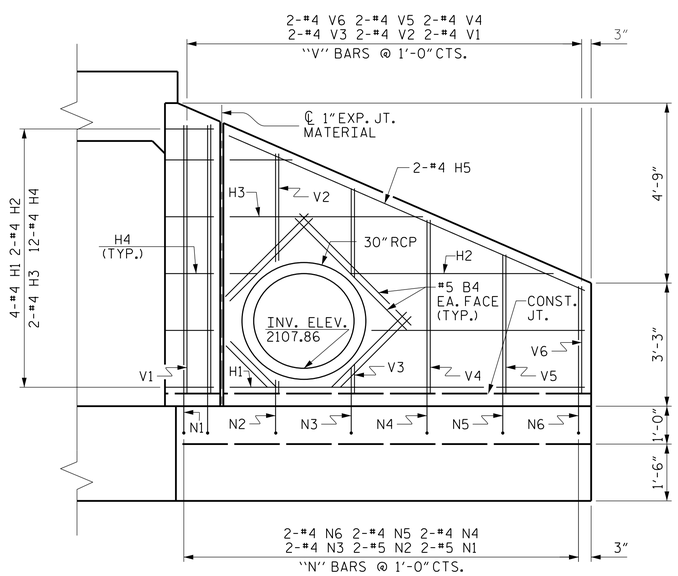

ELEVATION (W3)

BAR TYPES FOR BOX CULVERT

ALL BAR DIMENSIONS ARE OUT TO OUT.

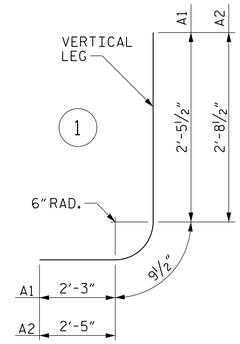

BILL OF MATERIAL FOR BOX CULVERT

BAR	NO.	SIZE	TYPE	LENGTH	WEIGHT
A100	480	#6	STR	10'-11"	7870
A200	482	#6	STR	10'-11"	7903
A1	960	#5	1	5'-6"	5507
A2	960	#6	1	5'-11"	8531
B1	560	#4	STR	8'-1"	3024
B2	960	#5	STR	6'-0"	6008
B3	16	#5	STR	3'-8"	61
C1	400	#4	STR	29'-2"	7793
D1	10	#6	STR	1'-4"	20
D2	10	#6	STR	1'-10"	28
G1	4	#4	STR	11'-0"	29
S2	12	#8	STR	11'-0"	352

TOTAL REINFORCING STEEL 47126 LBS

BAR TYPES FOR WINGS

ALL BAR DIMENSIONS ARE OUT TO OUT.

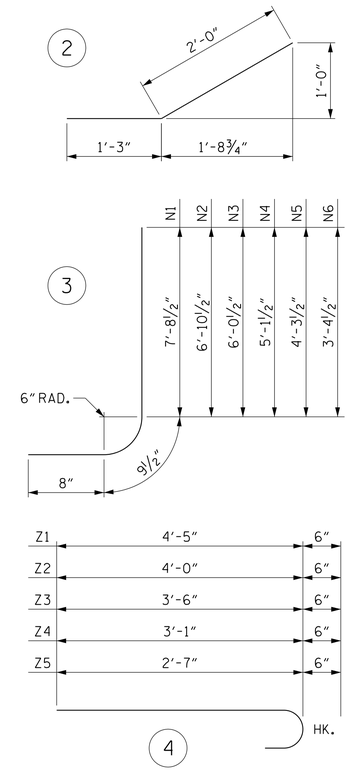

BILL OF MATERIAL FOR WINGS

BAR	NO.	SIZE	TYPE	LENGTH	WEIGHT
B4	16	#5	STR	5'-2"	86
H1	16	#4	STR	9'-4"	100
H2	8	#4	STR	8'-6"	45
H3	8	#4	STR	5'-1"	27
H4	48	#4	2	3'-3"	104
H5	8	#4	STR	10'-3"	55
N1	8	#5	3	9'-2"	76
N2	8	#5	3	8'-4"	70
N3	8	#4	3	7'-6"	40
N4	8	#4	3	6'-7"	35
N5	8	#4	3	5'-9"	31
N6	8	#4	3	4'-10"	26
S1	12	#6	STR	6'-0"	108
T1	12	#5	STR	11'-3"	141
V1	8	#4	STR	7'-1"	38
V2	8	#4	STR	6'-4"	34
V3	8	#4	STR	5'-5"	29
V4	8	#4	STR	4'-7"	24
V5	8	#4	STR	3'-8"	20
V6	8	#4	STR	2'-10"	15
Z1	16	#4	4	4'-11"	53
Z2	8	#4	4	4'-6"	24
Z3	8	#4	4	4'-0"	21
Z4	8	#4	4	3'-7"	19
Z5	8	#4	4	3'-1"	16

TOTAL REINFORCING STEEL FOR 4 WINGS 1237 LBS

CLASS A CONCRETE

4 WINGS	18.7	CY
2 HEADWALLS	1.1	CY
2 END CURTAIN WALLS	1.6	CY
SILLS & BAFFLES	2.3	CY
TOTAL	23.7	CY

NOTE:

CUT REINFORCING AS NECESSARY TO PROVIDE 2" MIN. CLEARANCE TO 30" RCP & TO CONST. JOINTS.

THE 30" Ø PIPE THROUGH THE WING WALL SHALL BE LOCATED BY THE ENGINEER.

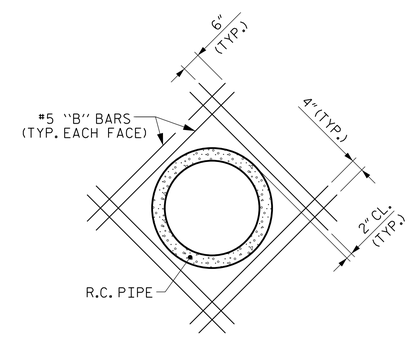

DETAIL OF REINFORCING AROUND PIPES

SPLICE LENGTH CHART

BAR	SIZE	SPLICE LENGTH
B1	#4	1'-9"
C1	#4	1'-11"

PROJECT NO. U-5105

HENDERSON COUNTY

STATION: 21+17.00 -L-

SHEET 6 OF 7

STATE OF NORTH CAROLINA
DEPARTMENT OF TRANSPORTATION
RALEIGH

SINGLE 10 FT. X 7 FT. CONCRETE BOX CULVERT 106° SKEW

NORTH CAROLINA PROFESSIONAL SEAL 034864 ENGINEER L. KEVIN AUSTIN

DocuSigned by: L. Kevin Austin
C2F7B372B4C4B8...
2/27/2018

PLANS PREPARED BY:

CALYX ENGINEERS + CONSULTANTS
6750 TRYON ROAD
CARY, NC 27518
phone: 919.851.1912
CALYXengineers.com
NC License # F-1333

DOCUMENT NOT CONSIDERED FINAL UNLESS ALL SIGNATURES COMPLETED

REVISIONS							SHEET NO.
NO.	BY:	DATE:	NO.	BY:	DATE:		C-6
1			3				TOTAL SHEETS
2			4				7

DRAWN BY :	W. B. ALLEN	DATE :	1/17
CHECKED BY :	Z. H. BROWN	DATE :	2/17
DESIGN ENGINEER OF RECORD:	L. K. AUSTIN	DATE :	2/17

2/15/2018 11:33:35 AM R:\Structures\U-5105_SMU_CU_06.dgn

DocuSign Envelope ID: D25BF417-50CB-4E3D-B866-D685803946CC

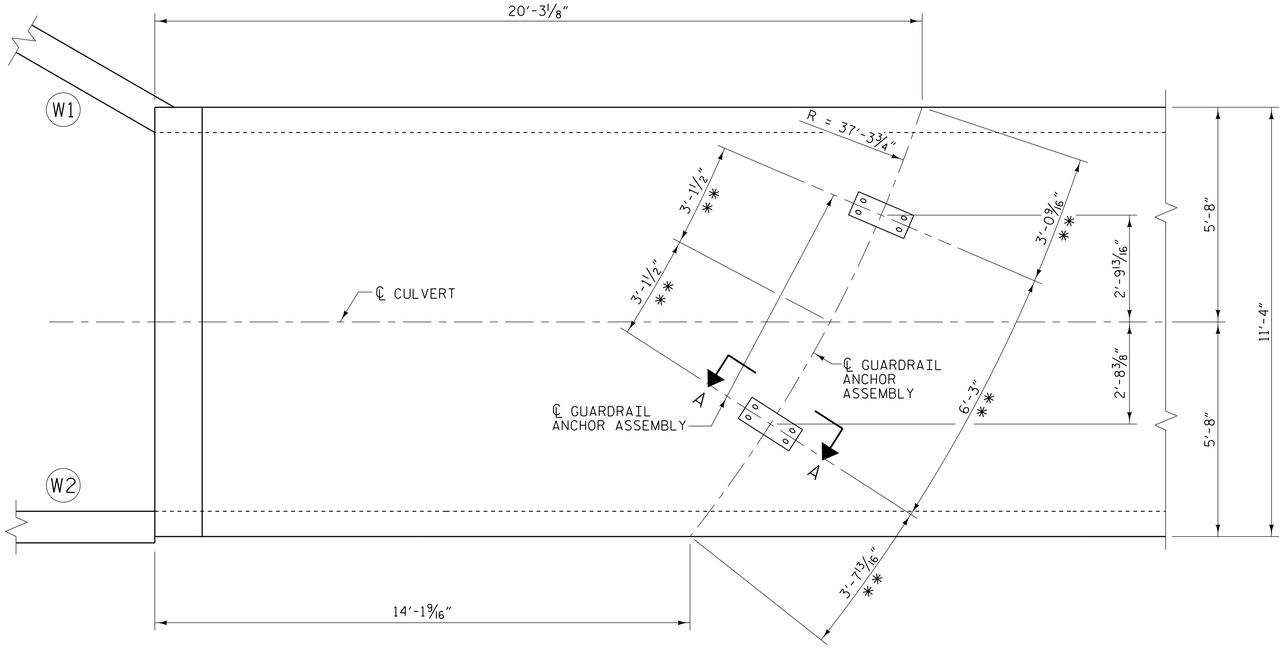

PLAN

SHOWING : GUARDRAIL ANCHOR ASSEMBLY SPACING.

** THIS DIMENSION MEASURED ALONG ARC

NOTES

THE GUARDRAIL ANCHOR ASSEMBLY FOR CULVERTS SHALL CONSIST OF THE FOLLOWING COMPONENTS :

A. FERRULES SHALL BE MADE FROM STEEL MEETING THE REQUIREMENTS OF AASHTO M169, GRADE 12L14 AND SHALL HAVE A MINIMUM LENGTH OF THREADS OF 2 1/2".

B. 4 - 1" Ø X 2 1/4" BOLTS WITH WASHERS, BOLTS SHALL CONFORM TO THE REQUIREMENTS OF ASTM A307. BOLTS AND WASHERS SHALL BE GALVANIZED. (AT THE CONTRACTOR'S OPTION, STAINLESS STEEL BOLTS AND WASHERS MAY BE USED AS AN ALTERNATE FOR THE 1" Ø X 2 1/4" GALVANIZED BOLTS AND WASHERS. THEY SHALL CONFORM TO OR EXCEED THE MECHANICAL REQUIREMENTS OF ASTM A307. THE USE OF THIS ALTERNATE SHALL BE APPROVED BY THE ENGINEER.)

C. WIRE STRUTS SHOWN IN THE GUARDRAIL ANCHOR ASSEMBLY FOR CULVERTS DETAIL ARE MINIMUM ALLOWABLE SIZE AND SHALL HAVE A MINIMUM TENSILE STRENGTH OF 100,000 P.S.I. AS AN OPTION, A 7/16" Ø WIRE STRUT WITH A MINIMUM TENSILE STRENGTH OF 90,000 PSI IS ACCEPTABLE.

GUARDRAIL ANCHOR ASSEMBLY WITH BOLTS SHALL BE ASSEMBLED IN THE SHOP. BOLT THREADS MAY BE RECUT AS NECESSARY TO INSURE FIT.

THE COST OF THE GUARDRAIL ANCHOR ASSEMBLY FOR CULVERTS COMPLETE IN PLACE, SHALL BE INCLUDED IN THE UNIT CONTRACT PRICE BID FOR CLASS "A" CONCRETE.

FERRULES TO BE PLUGGED DURING POURING OF SLAB AS RECOMMENDED BY THE MANUFACTURER.

AT THE CONTRACTOR'S OPTION, FERRULES WITH OPEN OR CLOSED ENDS MAY BE USED.

PAYMENT FOR GUARDRAIL, POSTS, AND POST BASE PLATES IS INCLUDED IN ROADWAY PAY ITEMS.

SLAB REINFORCING STEEL MAY BE SHIFTED AS NECESSARY TO CLEAR GUARDRAIL ANCHOR ASSEMBLY. CARE SHOULD BE TAKEN TO KEEP THE SHIFTING OF REINFORCING STEEL TO A MINIMUM.

THE CONTRACTOR MAY USE ADHESIVELY ANCHORED ANCHOR BOLTS IN PLACE OF GUARDRAIL ANCHOR ASSEMBLY. LEVEL TWO FIELD TESTING IS REQUIRED, AND THE YIELD LOAD OF THE 1"Ø BOLT IS 21.8 KIPS. FOR ADHESIVELY ANCHORED ANCHOR BOLTS OR DOWELS, SEE STANDARD SPECIFICATIONS.

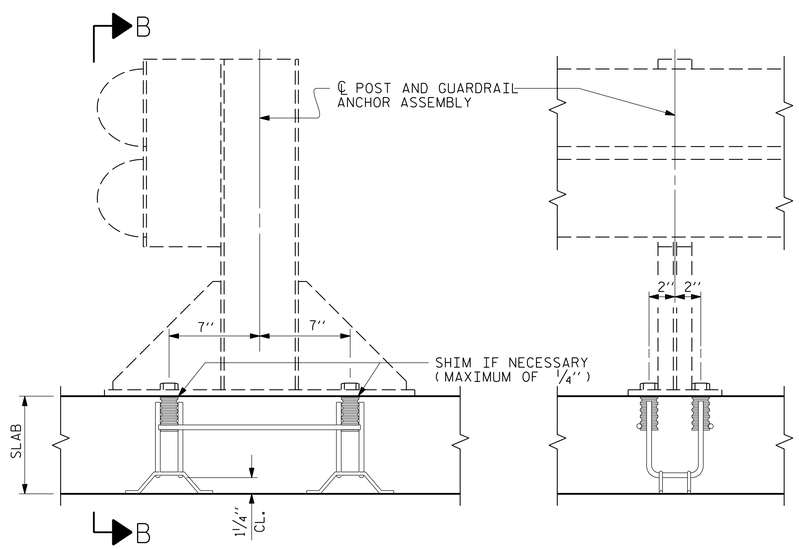

SECTION A-A

SECTION B-B

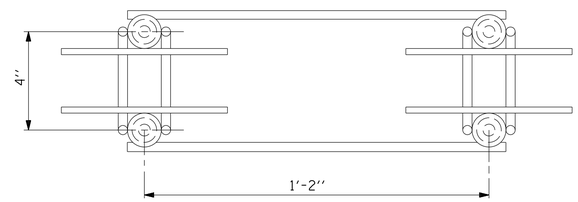

PLAN

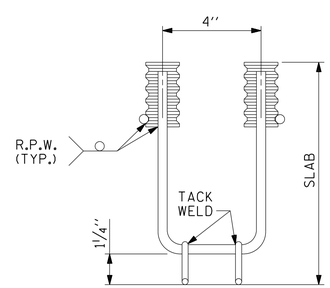

ELEVATION

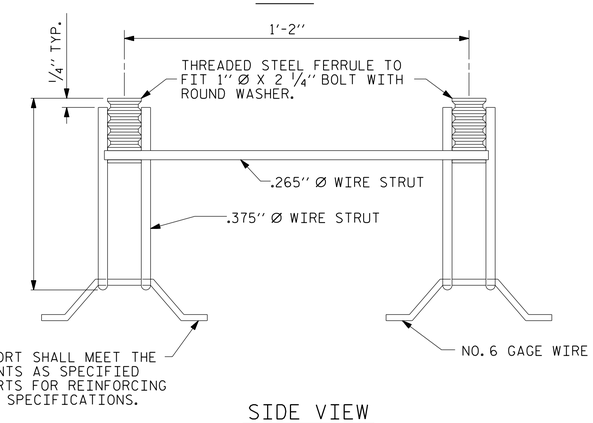

SIDE VIEW

GUARDRAIL ANCHOR ASSEMBLY FOR CULVERTS

PROJECT NO. U-5105

HENDERSON COUNTY

STATION: 21+17.00 -L-

SHEET 7 OF 7

STATE OF NORTH CAROLINA
DEPARTMENT OF TRANSPORTATION
RALEIGH

STANDARD

ANCHORAGE DETAILS FOR GUARDRAIL ANCHOR ASSEMBLY FOR CULVERTS

NORTH CAROLINA PROFESSIONAL ENGINEER SEAL KEVIN AUSTIN 2/27/2018

DocuSigned by: K. Kevin Austin 2/27/2018 3:59:06 PM EST

PLANS PREPARED BY:

CALYX ENGINEERS + CONSULTANTS
6750 TRYON ROAD
CARY, NC 27518
phone: 919.851.1912
CALYXengineers.com
NC License # F-1333

DOCUMENT NOT CONSIDERED FINAL UNLESS ALL SIGNATURES COMPLETED

REVISIONS						SHEET NO.
NO.	BY:	DATE:	NO.	BY:	DATE:	C-7
1			3			TOTAL SHEETS
2			4			7

ASSEMBLED BY : W. B. ALLEN		DATE : 2/17	
CHECKED BY : L. K. AUSTIN		DATE : 2/17	
DRAWN BY : FCJ	6/88	REV. 5/1/06R	KMM/GM
CHECKED BY : ARB	6/88	REV. 10/1/11	MAA/GM
		REV. 12/17	MAA/THC

STD. NO. GRA1

2/15/2018 11:33:37 AM R:\Structures\U-5105_SMU_CU_07.dgn

DocuSign Envelope ID: D25BF417-50CB-4E3D-B866-D685803946CC

STANDARD NOTES

DESIGN DATA:

SPECIFICATIONS	A.A.S.H.T.O. (CURRENT)
LIVE LOAD	SEE PLANS
IMPACT ALLOWANCE	SEE A.A.S.H.T.O.
STRESS IN EXTREME FIBER OF STRUCTURAL STEEL - AASHTO M270 GRADE 36	20,000 LBS. PER SQ. IN.
- AASHTO M270 GRADE 50W	27,000 LBS. PER SQ. IN.
- AASHTO M270 GRADE 50	27,000 LBS. PER SQ. IN.
REINFORCING STEEL IN TENSION - GRADE 60	24,000 LBS. PER SQ. IN.
CONCRETE IN COMPRESSION	1,200 LBS. PER SQ. IN.
CONCRETE IN SHEAR	SEE A.A.S.H.T.O.
STRUCTURAL TIMBER - TREATED OR UNTREATED EXTREME FIBER STRESS	1,800 LBS. PER SQ. IN.
COMPRESSION PERPENDICULAR TO GRAIN OF TIMBER	375 LBS. PER SQ. IN.
EQUIVALENT FLUID PRESSURE OF EARTH	30 LBS. PER CU. FT. (MINIMUM)

MATERIAL AND WORKMANSHIP:

EXCEPT AS MAY OTHERWISE BE SPECIFIED ON PLANS OR IN THE SPECIAL PROVISIONS, ALL MATERIAL AND WORKMANSHIP SHALL BE IN ACCORDANCE WITH THE 2018 "STANDARD SPECIFICATIONS FOR ROADS AND STRUCTURES" OF THE N. C. DEPARTMENT OF TRANSPORTATION.

STEEL SHEET PILING FOR PERMANENT OR TEMPORARY APPLICATIONS SHALL BE HOT ROLLED.

CONCRETE:

UNLESS OTHERWISE REQUIRED ON PLANS, CLASS A CONCRETE SHALL BE USED FOR ALL PORTIONS OF ALL STRUCTURES WITH THE EXCEPTION THAT: CLASS AA CONCRETE SHALL BE USED IN BRIDGE SUPERSTRUCTURES, ABUTMENT BACKWALLS, AND APPROACH SLABS; AND CLASS B CONCRETE SHALL BE USED FOR SLOPE PROTECTION AND RIP RAP.

CONCRETE CHAMFERS:

UNLESS OTHERWISE NOTED ON THE PLANS, ALL EXPOSED CORNERS ON STRUCTURES SHALL BE CHAMFERED ¾" WITH THE FOLLOWING EXCEPTIONS: TOP CORNERS OF CURBS MAY BE ROUNDED TO 1½" RADIUS WHICH IS BUILT INTO CURB FORMS; CORNERS OF TRANSVERSE FLOOR EXPANSION JOINTS SHALL BE ROUNDED WITH A ¼" FINISHING TOOL UNLESS OTHERWISE REQUIRED ON PLANS; AND CORNERS OF EXPANSION JOINTS IN THE ROADWAY FACES AND TOPS OF CURBS AND SIDEWALKS SHALL BE ROUNDED TO A ¼" RADIUS WITH A FINISHING STONE OR TOOL UNLESS OTHERWISE REQUIRED ON PLANS.

DOWELS:

DOWELS WHEN INDICATED ON PLANS AS FOR CULVERT EXTENSIONS, SHALL BE EMBEDDED AT LEAST 12" INTO THE OLD CONCRETE AND GROUTED INTO PLACE WITH 1:2 CEMENT MORTAR.

ALLOWANCE FOR DEAD LOAD DEFLECTION, SETTLEMENT, ETC. IN CASTING SUPERSTRUCTURES:

BRIDGES SHALL BE BUILT ON THE GRADE OR VERTICAL CURVE SHOWN ON PLANS. SLABS, CURBS AND PARAPETS SHALL CONFORM TO THE GRADE OR CURVE.

ALL DIMENSIONS WHICH ARE GIVEN IN SECTION AND ARE AFFECTED BY DEAD LOAD DEFLECTIONS ARE DIMENSIONS AT CENTER LINE OF BEARING UNLESS OTHERWISE NOTED ON PLANS. IN SETTING FORMS FOR STEEL BEAM BRIDGES AND PRESTRESSED CONCRETE GIRDER BRIDGES, ADJUSTMENTS SHALL BE MADE DUE TO THE DEAD LOAD DEFLECTIONS FOR THE ELEVATIONS SHOWN. WHERE BLOCKS ARE SHOWN OVER BEAMS FOR BUILDING UP TO THE SLAB, THE VERTICAL DIMENSIONS OF THE BLOCKS SHALL BE ADJUSTED BETWEEN BEARINGS TO COMPENSATE FOR DEAD LOAD DEFLECTIONS, VERTICAL CURVE ORDINATE, AND ACTUAL BEAM CAMBER. WHERE BOTTOM OF SLAB IS IN LINE WITH BOTTOM OF TOP FLANGES, DEPTH OF SLAB BETWEEN BEARINGS SHALL BE ADJUSTED TO COMPENSATE FOR DEAD LOAD DEFLECTION, VERTICAL CURVE ORDINATE, AND ACTUAL BEAM CAMBER.

IN SETTING FALSEWORK AND FORMS FOR REINFORCED CONCRETE SPANS, AN ALLOWANCE SHALL BE MADE FOR DEAD LOAD DEFLECTIONS, SETTLEMENT OF FALSEWORK, AND PERMANENT CAMBER WHICH SHALL BE PROVIDED FOR IN ADDITION TO THE ELEVATIONS SHOWN. AFTER REMOVAL OF THE FALSEWORK, THE FINISHED STRUCTURES SHALL CONFORM TO THE PROFILE AND ELEVATIONS SHOWN ON THE PLANS AND CONSTRUCTION ELEVATIONS FURNISHED BY THE ENGINEER.

DETAILED DRAWINGS FOR FALSEWORK OR FORMS FOR BRIDGE SUPERSTRUCTURE AND ANY STRUCTURE OR PARTS OF A STRUCTURE AS NOTED ON THE PLANS SHALL BE SUBMITTED TO THE ENGINEER FOR APPROVAL BEFORE CONSTRUCTION OF THE FALSEWORK OR FORMS IS STARTED.

REINFORCING STEEL:

ALL REINFORCING STEEL SHALL BE DEFORMED. DIMENSIONS RELATIVE TO PLACEMENT OF REINFORCING ARE TO CENTERS OF BARS UNLESS OTHERWISE INDICATED IN THE PLANS. DIMENSIONS ON BAR DETAILS ARE TO CENTERS OF BARS OR ARE OUT TO OUT AS INDICATED ON PLANS.

WIRE BAR SUPPORTS SHALL BE PROVIDED FOR REINFORCING STEEL WHERE INDICATED ON THE PLANS. WHEN BAR SUPPORT PIECES ARE PLACED IN CONTINUOUS LINES, THEY SHALL BE SO PLACED THAT THE ENDS OF THE SUPPORTING WIRES SHALL BE LAPPED TO LOCK LEGS ON ADJOINING PIECES.

STRUCTURAL STEEL:

AT THE CONTRACTOR'S OPTION, HE MAY SUBSTITUTE ⅞" Ø SHEAR STUDS FOR THE ¾" Ø STUDS SPECIFIED ON THE PLANS. THIS SUBSTITUTION SHALL BE MADE AT THE RATE OF 3 - ⅞" Ø STUDS FOR 4 - ¾" Ø STUDS, AND STUD SPACING CHANGES SHALL BE MADE AS NECESSARY TO PROVIDE THE SAME EQUIVALENT NUMBER OF ⅞" Ø STUDS ALONG THE BEAM AS SHOWN FOR ¾" Ø STUDS BASED ON THE RATIO OF 3 - ⅞" Ø STUDS FOR 4 - ¾" Ø STUDS. STUDS OF THE LENGTH SPECIFIED ON THE PLANS MUST BE PROVIDED. THE MAXIMUM SPACING SHALL BE 2'-0".

EXCEPT AT THE INTERIOR SUPPORTS OF CONTINUOUS BEAMS WHERE THE COVER PLATE IS IN CONTACT WITH BEARING PLATE, THE CONTRACTOR MAY, AT HIS OPTION, SUBSTITUTE FOR THE COVER PLATES DESIGNATED ON THE PLANS COVER PLATES OF THE EQUIVALENT AREA PROVIDED THESE PLATES ARE AT LEAST 5/16" IN THICKNESS AND DO NOT EXCEED A WIDTH EQUAL TO THE FLANGE WIDTH LESS 2" OR A THICKNESS EQUAL TO 2 TIMES THE FLANGE THICKNESS. THE SIZE OF FILLET WELDS SHALL CONFORM TO THE REQUIREMENTS OF THE CURRENT ANSI/AASHTO/AWS "BRIDGE WELDING CODE". ELECTROSLAG WELDING WILL NOT BE PERMITTED.

WITH THE SOLE EXCEPTION OF EDGES AT SURFACES WHICH BEAR ON OTHER SURFACES, ALL SHARP EDGES AND ENDS OF SHAPES AND PLATES SHALL BE SLIGHTLY ROUNDED BY SUITABLE MEANS TO A RADIUS OF APPROXIMATELY 1/16 INCH OR EQUIVALENT FLAT SURFACE AT A SUITABLE ANGLE PRIOR TO PAINTING, GALVANIZING, OR METALLIZING.

HANDRAILS AND POSTS:

METAL STANDARDS AND FACES OF THE CONCRETE END POSTS FOR THE METAL RAIL SHALL BE SET NORMAL TO THE GRADE OF THE CURB, UNLESS OTHERWISE SHOWN ON PLANS. THE METAL RAIL AND TOPS OF CONCRETE POSTS USED WITH THE ALUMINUM RAIL SHALL BE BUILT PARALLEL TO THE GRADE OF THE CURB.

METAL HANDRAILS SHALL BE IN ACCORDANCE WITH THE PLANS. RAILS SHALL BE AS MANUFACTURED FOR BRIDGE RAILING. CASTINGS SHALL BE OF A UNIFORM APPEARANCE. FINS AND OTHER DEFORMATIONS RESULTING FROM CASTING OR OTHERWISE SHALL BE REMOVED IN A MANNER SO THAT A UNIFORM COLORING OF THE COMPLETED CASTING SHALL BE OBTAINED. CASTINGS WITH DISCOLORATIONS OR OF NON-UNIFORM COLORING WILL NOT BE ACCEPTED. CERTIFIED MILL REPORTS ARE REQUIRED FOR METAL RAILS AND POSTS.

SPECIAL NOTES:

GENERALLY, IN CASE OF DISCREPANCY, THIS STANDARD SHEET OF NOTES SHALL GOVERN OVER THE SPECIFICATIONS, BUT THE REMAINDER OF THE PLANS SHALL GOVERN OVER NOTES HEREON, AND SPECIAL PROVISIONS SHALL GOVERN OVER ALL. SEE SPECIFICATIONS ARTICLE 105-4.

ENGLISH

JANUARY, 1990

STD. NO. SN

2/15/2018 11:33:38 AM R:\Structures\U-505_SMU_SN.dgn

REV. 6-16-95 EEM (✓) RGW REV. 5-7-03 RWW (✓) JTE REV. 10-1-11 MAA (✓) GM
REV. 8-16-99 RWW (✓) LES REV. 5-1-06 TLA (✓) GM REV. 12-17 MAA (✓) THC