PROJECT: 17BP.14.R.12

CONTRACT: DN00145

See Sheet 1-A For Index of Sheets
See Sheet 1-B For Conventional Symbols

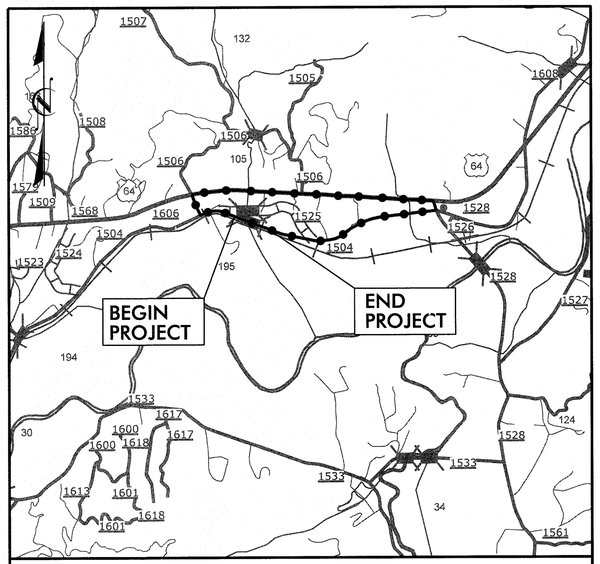

VICINITY MAP

DETOUR

STATE OF NORTH CAROLINA
DIVISION OF HIGHWAYS

TRANSYLVANIA COUNTY

LOCATION: BRIDGE No. 195 ON SR 1504 (OLD US 64) OVER LYDAY CREEK

TYPE OF WORK: PAVING, GRADING, GUARDRAIL, DRAINAGE AND STRUCTURE

STATE	STATE PROJECT REFERENCE NO.	SHEET NO.	TOTAL SHEETS
N.C.	17BP.14.R.12	1	

STATE PROJ. NO.	F.A. PROJ. NO.	DESCRIPTION
17BP.14.R.12		PE
17BP.14.R.12		ROW & UTIL
17BP.14.R.12		CONSTR

DESIGN EXCEPTION

SHOULDER WIDTH
STA. 10+60 TO STA. 11+50 LT -L-
FDPS = 0'-0"
TOTAL SHOULDER = 3'-0"

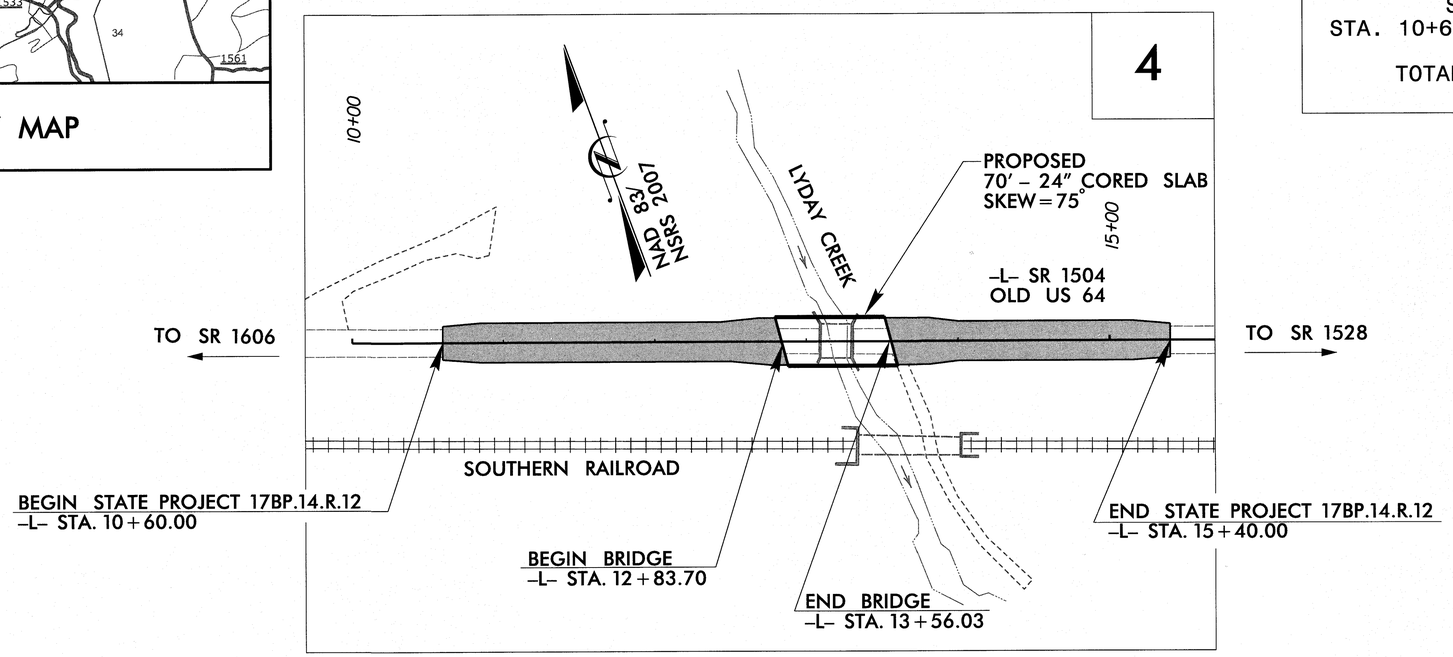

GRAPHIC SCALES

20 10 0 20 40
PLANS

20 10 0 20 40
PROFILE (HORIZONTAL)

5 2.5 0 5 10
PROFILE (VERTICAL)

DESIGN DATA

ADT 2013 = 2,970
ADT 2033 = 6,090
DHV = N/A %
D = N/A %
T = 7 % *
V = 60 MPH
* TTST = N/A DUAL 7%
FUNC CLASS =
MAJOR COLLECTOR
SUBREGIONAL TIER

PROJECT LENGTH

LENGTH ROADWAY PROJECT 17BP.14.R.12 = 0.077 mi.
LENGTH STRUCTURE PROJECT 17BP.14.R.12 = 0.014 mi.
TOTAL LENGTH PROJECT 17BP.14.R.12 = 0.091 mi.

Prepared for NCDOT In the Office of:
moffatt & nichol
1616 EAST MILLBROOK ROAD, SUITE 160
RALEIGH, NORTH CAROLINA 27609
(919) 781-4626 VOICE (919) 781-4869 FAX

2012 STANDARD SPECIFICATIONS

RIGHT OF WAY DATE:
JANUARY 11, 2013

LETTING DATE:
JUNE 10, 2014

TIM REID, P.E.
PROJECT ENGINEER

TRENT HUFFMAN, P.E.
PROJECT DESIGN ENGINEER

HYDRAULICS ENGINEER

moffatt & nichol
1616 EAST MILLBROOK ROAD, SUITE 160
RALEIGH, NORTH CAROLINA 27609
(919) 781-4626 VOICE (919) 781-4869 FAX

NORTH CAROLINA PROFESSIONAL SEAL 026696 ENGINEER JEFFERY L. RECK

SIGNATURE: Jeff Reck P.E. 5-9-2014

ROADWAY DESIGN ENGINEER

moffatt & nichol
1616 EAST MILLBROOK ROAD, SUITE 160
RALEIGH, NORTH CAROLINA 27609
(919) 781-4626 VOICE (919) 781-4869 FAX

NORTH CAROLINA PROFESSIONAL SEAL 015869 ENGINEER T. R. REID

SIGNATURE: T. R. Reid P.E. 5/9/2014

STATE OF NORTH CAROLINA DEPARTMENT OF TRANSPORTATION

5/9/2014
R:\Roadway\Proj\870195_rdy_tsh.dgn
thuffman

PROJECT REFERENCE NO.	SHEET NO.
17BP.14.R.12	1-A

ROADWAY DESIGN ENGINEER

NORTH CAROLINA PROFESSIONAL SEAL 015869 ENGINEER R. REID

5/9/2014

moffatt & nichol
1616 EAST MILLBROOK ROAD, SUITE 160
RALEIGH, NORTH CAROLINA 27609
(919) 781-4626 VOICE (919) 781-4865 FAX

INDEX OF SHEETS

INDEX OF SHEETS

SHEET NUMBER	SHEET
1	TITLE SHEET
1-A	INDEX OF SHEETS, GENERAL NOTES, AND LIST OF STANDARD DRAWINGS
1-B	CONVENTIONAL SYMBOLS
1-C	SURVEY CONTROL SHEET
2	PAVEMENT SCHEDULE AND TYPICAL SECTIONS
2-A	STRUCTURE ANCHOR UNITS - STANDARD 862d03
3	SUMMARY OF QUANTITIES
3-A	SUMMARY OF GUARDRAIL, EARTHWORK SUMMARY PARCEL INDEX, SHOULDER BERM GUTTER SUMMARY, DRAINAGE SUMMARY, PAVEMENT REMOVAL SUMMARY
4	PLAN SHEET
5	PROFILE SHEET
TMP-1 THRU TMP-3	TRANSPORTATION MANAGEMENT PLANS
PMP-1 THRU PMP-2	PAVEMENT MARKING PLANS
EC-1, EC-3 THRU EC-5	EROSION CONTROL PLAN
UO-1 THRU UO-2	UTILITY PLANS BY OTHERS
X-A THRU X-7	CROSS-SECTION SUMMARY, CROSS-SECTIONS
S-1 THRU S-14	STRUCTURE PLANS
SN	STRUCTURE NOTES SHEET

GENERAL NOTES:

2012 SPECIFICATIONS
EFFECTIVE: 01-17-2012
REVISED: 07-30-2012

GRADING AND SURFACING OR RESURFACING AND WIDENING:

THE GRADE LINES SHOWN DENOTE THE FINISHED ELEVATION OF THE PROPOSED SURFACING AT GRADE POINTS SHOWN ON THE TYPICAL SECTIONS. WHERE NO GRADE LINES ARE SHOWN, THE PROFILES SHOWN DENOTE THE TOP ELEVATION OF THE EXISTING PAVEMENT ALONG THE CENTER LINE OF SURVEY ON WHICH THE PROPOSED RESURFACING WILL BE PLACED. GRADE LINES MAY BE ADJUSTED BY THE ENGINEER IN ORDER TO SECURE A PROPER TIE-IN.

CLEARING:

CLEARING ON THIS PROJECT SHALL BE PERFORMED TO THE LIMITS ESTABLISHED BY METHOD II.

SUPERELEVATION:

ALL CURVES ON THIS PROJECT SHALL BE SUPERELEVATED IN ACCORDANCE WITH STD. NO. 225.04 USING THE RATE OF SUPERELEVATION AND RUNOFF SHOWN ON THE PLANS. SUPERELEVATION IS TO BE REVOLVED ABOUT THE GRADE POINTS SHOWN ON THE TYPICAL SECTIONS.

SHOULDER CONSTRUCTION:

ASPHALT, EARTH, AND CONCRETE SHOULDER CONSTRUCTION ON THE HIGH SIDE OF SUPERELEVATED CURVES SHALL BE IN ACCORDANCE WITH STD. NO. 560.01

GUARDRAIL:

THE GUARDRAIL LOCATIONS SHOWN ON THE PLANS MAY BE ADJUSTED DURING CONSTRUCTION AS DIRECTED BY THE ENGINEER. THE CONTRACTOR SHOULD CONSULT WITH THE ENGINEER PRIOR TO ORDERING GUARDRAIL MATERIAL.

SUBSURFACE PLANS:

NO SUBSURFACE PLANS ARE AVAILABLE ON THIS PROJECT. THE CONTRACTOR SHOULD MAKE HIS OWN INVESTIGATION AS TO THE SUBSURFACE CONDITIONS.

END BENTS:

THE ENGINEER SHALL CHECK THE STRUCTURE END BENT PLANS, DETAILS, AND CROSS-SECTION PRIOR TO SETTING OF THE SLOPE STAKES FOR THE EMBANKMENT OR EXCAVATION APPROACHING A BRIDGE.

UTILITIES:

UTILITY OWNERS ON THIS PROJECT ARE COMPORIUM - TELEPHONE & CATV

ANY RELOCATION OF EXISTING UTILITIES WILL BE ACCOMPLISHED BY OTHERS.

RIGHT-OF-WAY MARKERS:

ALL RIGHT-OF-WAY MARKERS ON THIS PROJECT SHALL BE PLACED BY CONTRACT IN ACCORDANCE WITH SECTION 801 OF THE 2012 NORTH CAROLINA STANDARD SPECIFICATIONS FOR ROADS AND STRUCTURES.

EFF. 01-17-2012
REV. 10-30-2012

2012 ROADWAY ENGLISH STANDARD DRAWINGS

The following Roadway Standards as appear in "Roadway Standard Drawings" Highway Design Branch - N. C. Department of Transportation - Raleigh, N. C., Dated January, 2012 are applicable to this project and by reference hereby are considered a part of these plans:

STD.NO.	TITLE
DIVISION 2 - EARTHWORK	
200.02	Method of Clearing - Method II
225.02	Guide for Grading Subgrade - Secondary and Local
225.04	Method of Obtaining Superelevation - Two Lane Pavement
DIVISION 3 - PIPE CULVERTS	
300.01	Method of Pipe Installation
DIVISION 4 - MAJOR STRUCTURES	
422.11	Reinforced Bridge Approach Fills - Sub Regional Tier
DIVISION 5 - SUBGRADE, BASES AND SHOULDERS	
560.01	Method of Shoulder Construction - High Side of Superelevated Curve - Method I
DIVISION 6 - ASPHALT BASES AND PAVEMENTS	
654.01	Pavement Repairs
DIVISION 8 - INCIDENTALS	
806.01	Concrete Right-of-Way Marker
840.36	Traffic Bearing Grated Drop Inlet - for Steel (840.37) Double Frame and Grates
840.37	Steel Grate and Frame
840.46	Traffic Bearing Precast Drainage Structure
846.01	Concrete Curb, Gutter and Curb & Gutter
846.04	Drop Inlet Installation in Shoulder Berm Gutter
862.01	Guardrail Placement
862.02	Guardrail Installation
876.02	Guide for Rip Rap at Pipe Outlets
876.03	Drainage Ditches with Class 'A' Rip Rap

8/17/99

5/9/2014
R:\Roadway\Proj\8701195_rdy_psh01-A.dgn

12/05/11

PROJECT REFERENCE NO.	SHEET NO.
17BP.14.R.12	1-B

Note: Not to Scale

****S.U.E. = Subsurface Utility Engineering***

STATE OF NORTH CAROLINA
DIVISION OF HIGHWAYS

CONVENTIONAL PLAN SHEET SYMBOLS

BOUNDARIES AND PROPERTY:

- State Line
- County Line
- Township Line
- City Line
- Reservation Line
- Property Line
- Existing Iron Pin — EIP
- Property Corner
- Property Monument — ECM
- Parcel/Sequence Number — 123
- Existing Fence Line
- Proposed Woven Wire Fence
- Proposed Chain Link Fence
- Proposed Barbed Wire Fence
- Existing Wetland Boundary — WLB
- Proposed Wetland Boundary — WLB
- Existing Endangered Animal Boundary — EAB
- Existing Endangered Plant Boundary — EPB
- Known Soil Contamination: Area or Site
- Potential Soil Contamination: Area or Site

BUILDINGS AND OTHER CULTURE:

- Gas Pump Vent or U/G Tank Cap
- Sign — S
- Well — W
- Small Mine
- Foundation
- Area Outline
- Cemetery
- Building
- School
- Church
- Dam

HYDROLOGY:

- Stream or Body of Water
- Hydro, Pool or Reservoir
- Jurisdictional Stream — JS
- Buffer Zone 1 — BZ 1
- Buffer Zone 2 — BZ 2
- Flow Arrow
- Disappearing Stream
- Spring
- Wetland
- Proposed Lateral, Tail, Head Ditch — FLOW
- False Sump

RAILROADS:

- Standard Gauge — CSX TRANSPORTATION
- RR Signal Milepost — MILEPOST 35
- Switch — SWITCH
- RR Abandoned
- RR Dismantled

RIGHT OF WAY:

- Baseline Control Point
- Existing Right of Way Marker
- Existing Right of Way Line
- Proposed Right of Way Line — RW
- Proposed Right of Way Line with Iron Pin and Cap Marker — RW
- Proposed Right of Way Line with Concrete or Granite R/W Marker — RW
- Proposed Control of Access Line with Concrete C/A Marker — CA
- Existing Control of Access — CA
- Proposed Control of Access — CA
- Existing Easement Line — E
- Proposed Temporary Construction Easement — E
- Proposed Temporary Drainage Easement — TDE
- Proposed Permanent Drainage Easement — PDE
- Proposed Permanent Drainage / Utility Easement — DUE
- Proposed Permanent Utility Easement — PUE
- Proposed Temporary Utility Easement — TUE
- Proposed Aerial Utility Easement — AUE
- Proposed Permanent Easement with Iron Pin and Cap Marker

ROADS AND RELATED FEATURES:

- Existing Edge of Pavement
- Existing Curb
- Proposed Slope Stakes Cut — C
- Proposed Slope Stakes Fill — F
- Proposed Curb Ramp — CR
- Existing Metal Guardrail
- Proposed Guardrail
- Existing Cable Guiderail
- Proposed Cable Guiderail
- Equality Symbol
- Pavement Removal

VEGETATION:

- Single Tree
- Single Shrub
- Hedge
- Woods Line
- Orchard
- Vineyard — Vineyard

EXISTING STRUCTURES:

MAJOR:

- Bridge, Tunnel or Box Culvert — CONC
- Bridge Wing Wall, Head Wall and End Wall — CONC WW

MINOR:

- Head and End Wall — CONC HW
- Pipe Culvert
- Footbridge
- Drainage Box: Catch Basin, DI or JB — CB
- Paved Ditch Gutter
- Storm Sewer Manhole — S
- Storm Sewer — S

UTILITIES:

POWER:

- Existing Power Pole
- Proposed Power Pole
- Existing Joint Use Pole
- Proposed Joint Use Pole
- Power Manhole — P
- Power Line Tower
- Power Transformer
- U/G Power Cable Hand Hole
- H-Frame Pole
- Recorded U/G Power Line — P
- Designated U/G Power Line (S.U.E.*) — P

TELEPHONE:

- Existing Telephone Pole
- Proposed Telephone Pole
- Telephone Manhole — T
- Telephone Booth
- Telephone Pedestal — T
- Telephone Cell Tower
- U/G Telephone Cable Hand Hole — HH
- Recorded U/G Telephone Cable — T
- Designated U/G Telephone Cable (S.U.E.*) — T
- Recorded U/G Telephone Conduit — TC
- Designated U/G Telephone Conduit (S.U.E.*) — TC
- Recorded U/G Fiber Optics Cable — T FO
- Designated U/G Fiber Optics Cable (S.U.E.*) — T FO

WATER:

- Water Manhole — W
- Water Meter
- Water Valve
- Water Hydrant
- Recorded U/G Water Line — W
- Designated U/G Water Line (S.U.E.*) — W
- Above Ground Water Line — A/G Water

TV:

- TV Satellite Dish
- TV Pedestal — C
- TV Tower
- U/G TV Cable Hand Hole — HH
- Recorded U/G TV Cable — TV
- Designated U/G TV Cable (S.U.E.*) — TV
- Recorded U/G Fiber Optic Cable — TV FO
- Designated U/G Fiber Optic Cable (S.U.E.*) — TV FO

GAS:

- Gas Valve
- Gas Meter
- Recorded U/G Gas Line — G
- Designated U/G Gas Line (S.U.E.*) — G
- Above Ground Gas Line — A/G Gas

SANITARY SEWER:

- Sanitary Sewer Manhole
- Sanitary Sewer Cleanout
- U/G Sanitary Sewer Line — SS
- Above Ground Sanitary Sewer — A/G Sanitary Sewer
- Recorded SS Forced Main Line — FSS
- Designated SS Forced Main Line (S.U.E.*) — FSS

MISCELLANEOUS:

- Utility Pole
- Utility Pole with Base
- Utility Located Object
- Utility Traffic Signal Box — S
- Utility Unknown U/G Line — ?UTL
- U/G Tank; Water, Gas, Oil
- Underground Storage Tank, Approx. Loc. — UST
- A/G Tank; Water, Gas, Oil
- Geoenvironmental Boring
- U/G Test Hole (S.U.E.*)
- Abandoned According to Utility Records — AATUR
- End of Information — E.O.I.

PROJECT REFERENCE NO.	SHEET NO.
17BP.14.R.12	1-C
Location and Surveys	

SURVEY CONTROL SHEET 87-0195
-FINAL-

BL POINT	DESC.	NORTH	EAST	ELEVATION	L STATION	OFFSET
1	BL-1	574082.4550	906216.6738	0000.00	OUTSIDE PROJECT LIMITS	
2	BL-2	517964.6590	908383.7778	0000.00	OUTSIDE PROJECT LIMITS	
3	BL-3	573827.9705	908744.8995	0000.00	13+55.51	13.25 RT
4	BL-4	573774.7610	908956.6960	0000.00	15+72.44	11.80 LT
5	BL-5	573616.3448	909235.2710	0000.00	OUTSIDE PROJECT LIMITS	

****
BM1 ELEVATION = 2111.72
N 574042 E 908139
OUTSIDE PROJECT LIMITS
MARKER TYPE NOT DESCRIBED
****

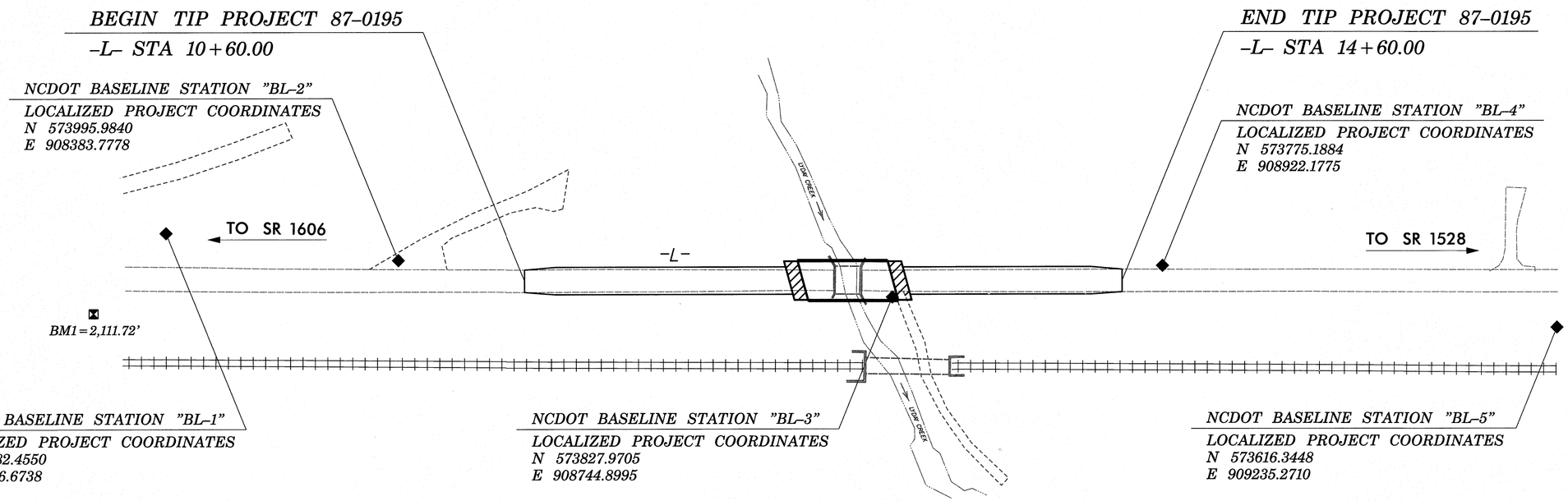

DATUM DESCRIPTION

THE LOCALIZED COORDINATE SYSTEM DEVELOPED FOR THIS PROJECT IS BASED ON THE STATE PLANE COORDINATES ESTABLISHED BY OTHERS FOR MONUMENT "BL-1" WITH NAD 83 STATE PLANE GRID COORDINATES OF NORTHING: 574082.4550(ft) EASTING: 908216.6738(ft)

THE AVERAGE COMBINED GRID FACTOR USED ON THIS PROJECT (GROUND TO GRID) IS: 0.9998727

THE N.C. LAMBERT GRID BEARING AND LOCALIZED HORIZONTAL GROUND DISTANCE FROM "BL-1" TO -L- STATION 10+60.00 IS S 61° 46' 07.79" E 291.08 FT.

ALL LINEAR DIMENSIONS ARE LOCALIZED HORIZONTAL DISTANCES
VERTICAL DATUM USED IS NGVD 29

FINAL -L-

TYPE	STATION	NORTH	SOUTH
POT	10+00.00	573965.9618	908416.9989
POT	16+50.00	573736.3271	909025.0843

FINAL ROW MARKER AND IRON PIN AND CAP-E

ALIGN	STATION	OFFSET	NORTH	SOUTH
L	10+35.00	-18.39	573970.7985	908456.2379
L	10+35.00	-35.00	573986.3399	908462.1069
L	11+00.00	-40.00	573968.0540	908524.6818
L	11+65.00	-40.00	573945.0906	908585.4904
L	11+95.00	-35.00	573929.8145	908611.7894
L	12+60.00	-35.00	573906.8510	908672.5980
L	13+64.00	-30.00	573865.4319	908768.1252
L	14+40.00	-30.00	573838.5823	908839.2245
L	14+40.00	-17.44	573826.8358	908834.7886

GEOIDAL MODEL -
NOTE: DRAWING NOT TO SCALE

NOTES:

1. THE CONTROL DATA FOR THIS PROJECT CAN BE FOUND ELECTRONICALLY BY SELECTING PROJECT CONTROL DATA AT:
HTTPS://CONNECT.NCDOT.GOV/RESOURCES/LOCATION/

THE FILES TO BE FOUND ARE AS FOLLOWS:
87-0195_LS_CONTROL.TXT

SITE CALIBRATION INFORMATION HAS NOT BEEN PROVIDED FOR THIS PROJECT. IF FURTHER INFORMATION IS NEEDED, PLEASE CONTACT THE LOCATION AND SURVEYS UNIT.

△ INDICATES GEODETIC CONTROL MONUMENTS USED OR SET FOR HORIZONTAL PROJECT CONTROL BY THE NCDOT LOCATION AND SURVEYS UNIT.
PROJECT CONTROL ESTABLISHED USING GLOBAL POSITIONING SYSTEM.

6/2/99
5/31/2014
R:\Roadway\Proj\8701195_rdy_psh01-C.dgn

PROJECT REFERENCE NO.	SHEET NO.
17BP.14.R.12	2
R/W SHEET NO.	
ROADWAY DESIGN ENGINEER	PAVEMENT ENGINEER

NORTH CAROLINA PROFESSIONAL SEAL 015869 ENGINEER T. R. REID 5/9/2014

moffatt & nichol
1616 EAST MILLBROOK ROAD, SUITE 160
RALEIGH, NORTH CAROLINA 27609
(919) 781-4626 VOICE (919) 781-4628 FAX

PAVEMENT SCHEDULE

(FINAL PAVEMENT DESIGN)

C1	PROP. APPROX. 3" ASPHALT CONCRETE SURFACE COURSE, TYPE SF9.5A, AT AN AVERAGE RATE OF 168 LBS. PER SQ. YD. IN EACH OF TWO LAYERS.
C2	PROP. VAR. DEPTH ASPHALT CONCRETE SURFACE COURSE, TYPE SF9.5A, AT AN AVERAGE RATE OF 110 LBS. PER SQ. YD. PER 1" DEPTH. TO BE PLACED IN LAYERS NOT TO EXCEED 1½" IN DEPTH.
E1	PROP. APPROX. 5½" ASPHALT CONCRETE BASE COURSE, TYPE B25.0B, AT AN AVERAGE RATE OF 627 LBS. PER SQ. YD.
E2	PROP. VAR. DEPTH ASPHALT CONCRETE BASE COURSE, TYPE B25.0B, AT AN AVERAGE RATE OF 114 LBS. PER SQ. YD. PER 1" DEPTH. TO BE PLACED IN LAYERS NOT LESS THAN 3" IN DEPTH OR GREATER THAN 5½" IN DEPTH.
R1	SHOULDER BERM GUTTER
T	EARTH MATERIAL.
U	EXISTING PAVEMENT.
W	VARIABLE DEPTH ASPHALT PAVEMENT (SEE STANDARD WEDGING DETAIL ON THIS SHEET)

NOTE: PAVEMENT EDGE SLOPES ARE 1:1 UNLESS SHOWN OTHERWISE.

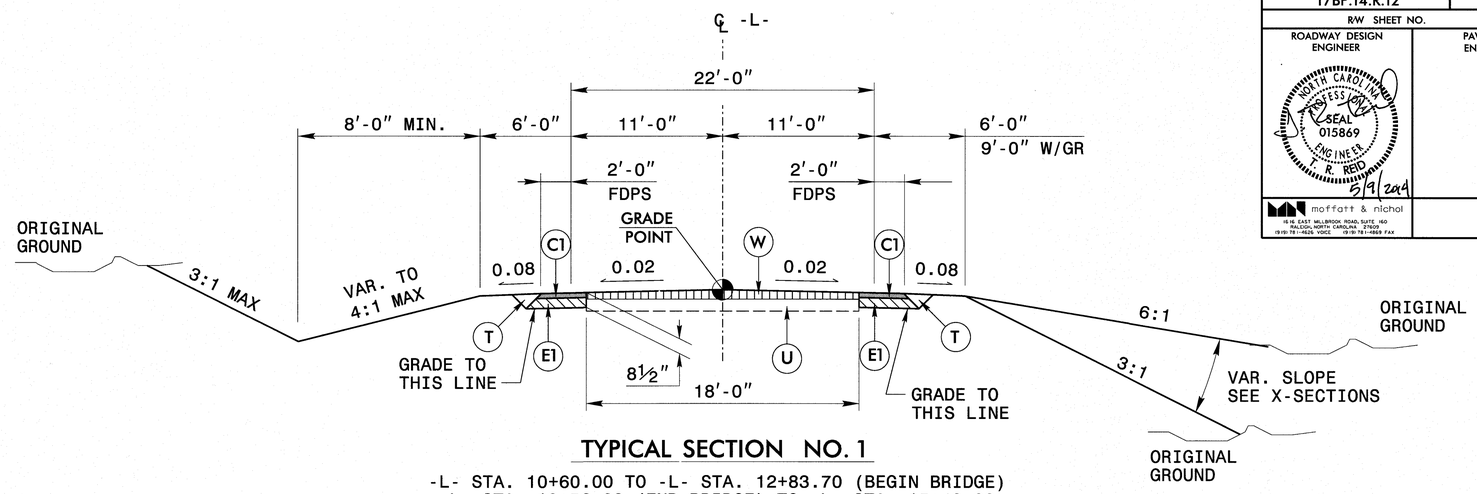

TYPICAL SECTION NO. 1

-L- STA. 10+60.00 TO -L- STA. 12+83.70 (BEGIN BRIDGE)
-L- STA. 13+56.03 (END BRIDGE) TO -L- STA. 15+40.00

DESIGN EXCEPTION

SHOULDER WIDTH
STA. 10+60 TO STA. 11+50 LT -L-
FDPS = 0'-0"
TOTAL SHOULDER = 3'-0"

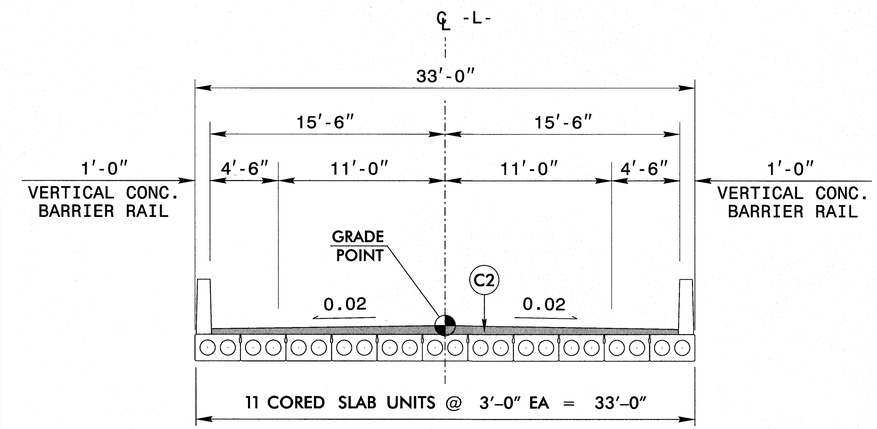

NOTE: SEE STRUCTURE PLANS FOR ASPHALT WEARING SURFACE

BRIDGE TYPICAL

(-L-) SR 1504 (Old US 64) over Lyday Creek
-L- STA. 12+83.70 TO -L- STA. 13+56.03

Detail Showing Shoulder Berm Gutter on Top of Subgrade

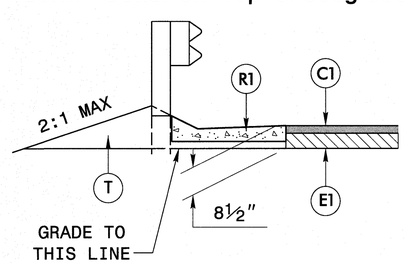

INSET DETAIL No. 1

TO BE USED IN CONJUNCTION WITH TYPICAL SECTION No. 1 AS FOLLOWS

-L- STA. 13+62.89 TO -L- STA. 13+81.00 (LT)
-L- STA. 13+71.12 TO -L- STA. 13+81.00 (RT)

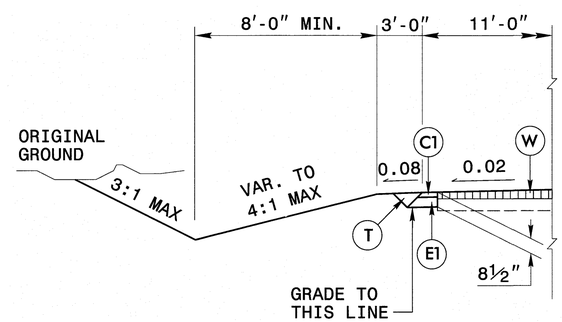

INSET DETAIL No. 2

TO BE USED IN CONJUNCTION WITH TYPICAL SECTION No. 1 AS FOLLOWS

-L- STA. 10+60.00 TO -L- STA. 11+50.00 (LT)

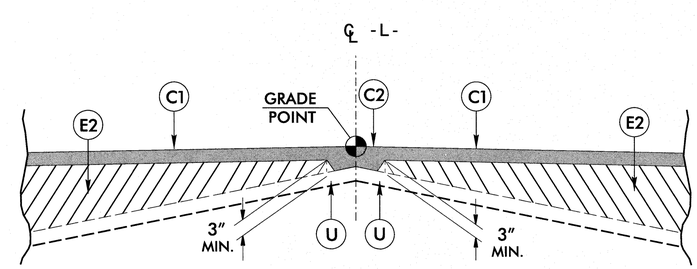

Detail Showing Method of Wedging

5/14/99

5/9/2014
R:\Roadway\Proj\B70195_rdy_typ.dgn
thurman

PROJECT REFERENCE NO.	SHEET NO.
17BP.14.R.12	2-A

STATE OF NORTH CAROLINA DEPT. OF TRANSPORTATION DIVISION OF HIGHWAYS RALEIGH, N.C.
ENGLISH DETAIL DRAWING FOR STRUCTURE ANCHOR UNITS GUARDRAIL ANCHOR UNIT, TYPE III FOR ATTACHMENT TO RAIL ON BRIDGE - SUB REGIONAL TIER
SHEET 2 OF 7 862d03

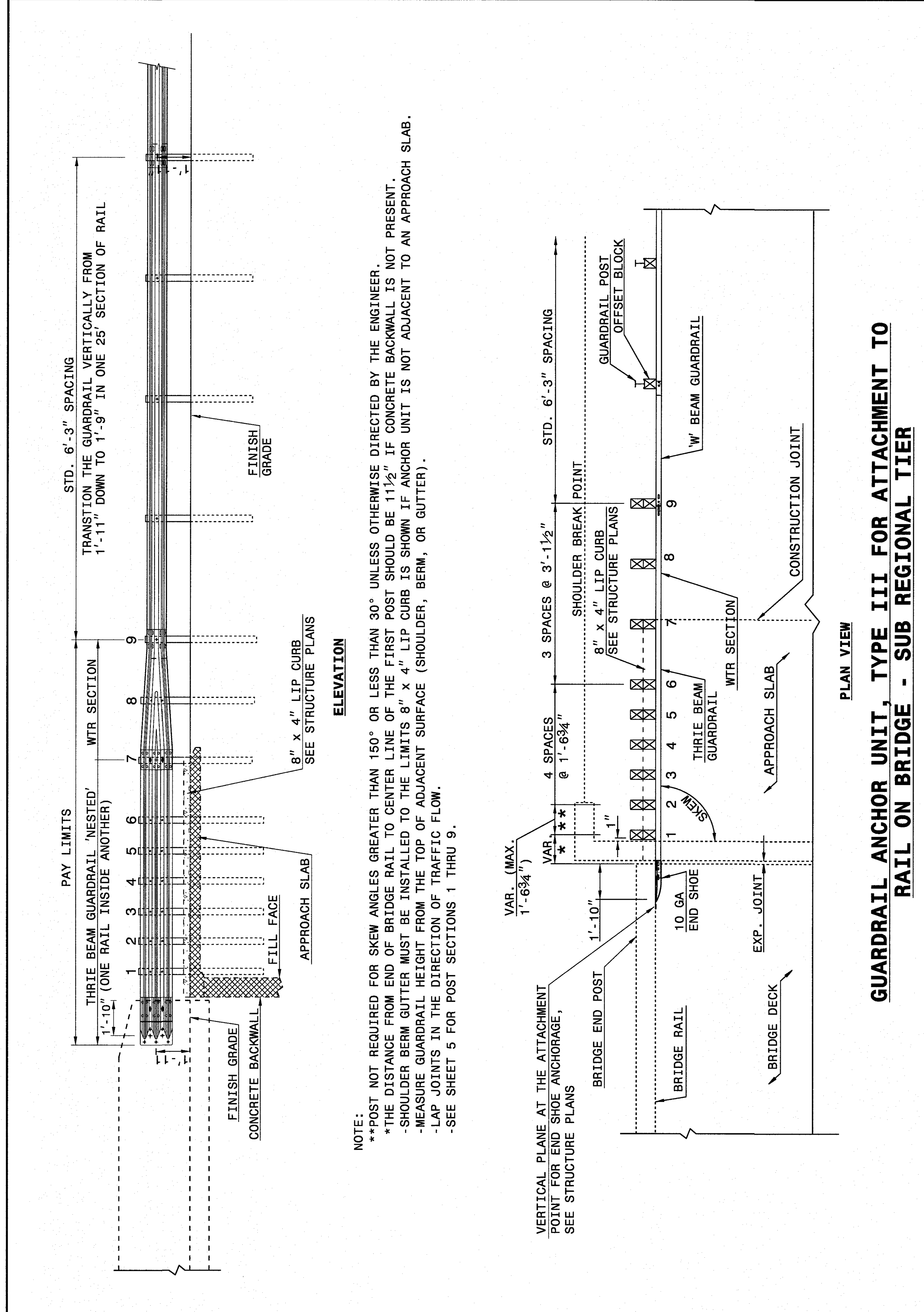

GUARDRAIL ANCHOR UNIT, TYPE III FOR ATTACHMENT TO RAIL ON BRIDGE - SUB REGIONAL TIER

STATE OF NORTH CAROLINA DEPT. OF TRANSPORTATION DIVISION OF HIGHWAYS RALEIGH, N.C.	ENGLISH DETAIL DRAWING FOR **STRUCTURE ANCHOR UNITS** GUARDRAIL ANCHOR UNIT, TYPE III FOR ATTACHMENT TO RAIL ON BRIDGE - SUB REGIONAL TIER	SHEET 2 OF 7 862d03

STATE OF NORTH CAROLINA DEPT. OF TRANSPORTATION DIVISION OF HIGHWAYS RALEIGH, N.C.
ENGLISH DETAIL DRAWING FOR STRUCTURE ANCHOR UNITS GUARDRAIL ANCHOR UNIT, TYPE III
SHEET 3 OF 7 862d03

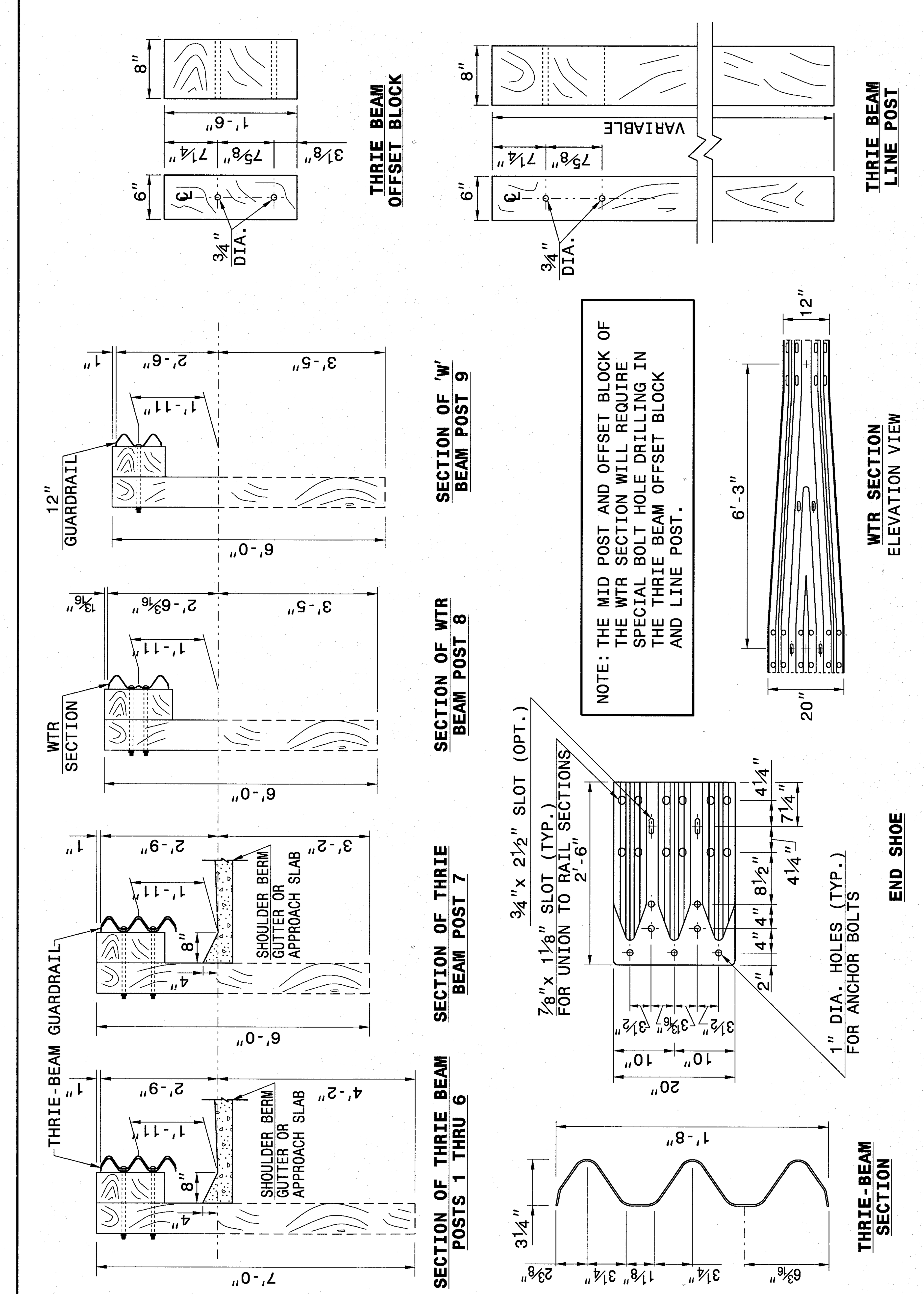

STATE OF NORTH CAROLINA DEPT. OF TRANSPORTATION DIVISION OF HIGHWAYS RALEIGH, N.C.	ENGLISH DETAIL DRAWING FOR **STRUCTURE ANCHOR UNITS** GUARDRAIL ANCHOR UNIT, TYPE III	SHEET 3 OF 7 862d03

CONTRACT STANDARDS AND DEVELOPMENT UNIT
Office 919-707-6950 FAX 919-250-4119

SEE TITLE BLOCK

ORIGINAL BY: J HOWERTON DATE: 06-22-12
MODIFIED BY: DATE:
CHECKED BY: DATE:
FILE SPEC.:

$$$$$SYSTIME$$$$ $$$$$$$$$$$DGN$$$$$$$$$$$$$$$$ $$$$USERNAME$$$$
PDF created with pdfFactory Pro trial version www.pdffactory.com

COMPUTED BY: C. POWELL DATE: 05/08/2014
CHECKED BY: T. HUFFMAN DATE: 05/08/2014

PROJECT REFERENCE NO.	SHEET NO.
17BP.14.R.12	3

STATE OF NORTH CAROLINA
DIVISION OF HIGHWAYS

SUMMARY OF QUANTITIES

STATE OF NORTH CAROLINA
DIVISION OF HIGHWAYS
ROADWAY SUMMARY OF QUANTITIES FOR CONTRACT - 17BP.14.R.12

Item Number	Sec #	Qunatity	Unit	Description
0000100000-N	800	1	LS	MOBILIZATION
0000400000-N	801	1	LS	CONSTRUCTION SURVEYING
0030000000-N	SP	1	LS	REIENFORCED BRDIGE APPROACH FILL SUB-REGIONAL TIER, STA 13+19.90
0043000000-N	226	1	LS	GRADING
0050000000-E	226	1	ACR	SUPPLEMENTARY CLEARING AND GRUBBING
0057000000-E	226	50	CY	UNDERCUT EXCAVATION
0195000000-E	265	50	CY	SELECT GRANULAR MATERIAL
0196000000-E	270	50	SY	GEOTEXTILE FOR SOIL STABILIZATION
0318000000-E	300	10	TON	FOUNDATION CONDITIONING MATERIAL, MINOR STRUCTURES
0320000000-E	300	20	SY	FOUNDATION CONDITIONING GEOTEXTILE
0335200000-E	305	48	LF	15" DRAINAGE PIPE
0995000000-E	340	30	LF	PIPE REMOVAL
1220000000-E	545	50	TON	INCIDENTAL STONE BASE
1489000000-E	610	180	TON	ASPHALT CONC BASE COURSE, TYPE B 25.0 B
1525000000-E	610	330	TON	ASPHALT CONC SURFACE COURSE, TYPE SF 9.5 A
1575000000-E	620	35	TON	ASPHALT BINDER FOR PLANT MIX
2286000000-N	840	2	EA	MASONRY DRAINAGE STRUCTURES (TBDI - 840.36)
2407000000-N	840	2	EA	STEEL FRAME WITH TWO GRATES, 840.37
2556000000-E	846	30	LF	SHOULDER BERM GUTTER
3030000000-E	862	150	LF	STEEL BEAM GUARDRAIL
3150000000-N	862	4	EA	ADDITIONAL GUARDRAIL POSTS
3165000000-N	SP	4	EA	GUARDRAIL ANCHOR UNITS, TYPE 350 (TL-2)
3215000000-N	862	4	EA	GUARDRAIL ANCHOR UNITS, TYPE III
3574000000-N	867	60	LF	SPLIT RAIL FENCE RESET
3574000000-N	867	200	LF	ELECTRIC FENCE RESET
3628000000-E	876	7	TON	PLAIN RIP RAP, CLASS I
3642000000-E	876	7	TON	PLAIN RIP RAP, CLASS A
3656000000-E	876	47	SY	GEOTEXTILE FOR DRAINAGE
4400000000-E	1110	94	SF	WORK ZONE SIGNS (STATIONARY)
4410000000-E	1110	58	SF	WORK ZONE SIGNS (BARRICADE MOUNTED)
4445000000-E	1145	64	LF	BARRICADES (TYPE III)
4450000000-N	1150	16	HR	FLAGGER
4810000000-E	1205	4610	LF	PAINT PAVEMENT MARKING LINES (4")
6000000000-E	1605	640	LF	TEMPORARY SILT FENCE
6009000000-E	1610	75	TON	STONE FOR EROSION CONTROL, CLASS B
6012000000-E	1610	100	TON	SEDIMENT CONTROL STONE
6015000000-E	1615	1.0	ACR	TEMPORARY MULCHING
6018000000-E	1620	50	LB	SEED FOR TEMPORARY SEEDING

STATE OF NORTH CAROLINA
DIVISION OF HIGHWAYS
ROADWAY SUMMARY OF QUANTITIES FOR CONTRACT - 17BP.14.R.12

Item Number	Sec #	Qunatity	Unit	Description
6021000000-E	1620	0.25	TON	FERTILIZER FOR TEMPORARY SEEDING
6024000000-E	1622	100	LF	TEMPORARY SLOPE DRAINS
6029000000-E	SP	100	LF	SAFETY FENCE
6030000000-E	1630	40	CY	SILT EXCAVATION
6036000000-E	1631	1280	SY	MATTING FOR EROSION CONTROL
6042000000-E	1632	105	LF	¼" HARDWARE CLOTH
6070000000-N	1639	1	EA	SPECIAL STILLING BASINS
6084000000-E	1660	1.0	ACR	SEEDING & MULCHING
6087000000-E	1660	3.0	ACR	MOWING
6090000000-E	1661	50	LB	SEED FOR REPAIR SEEDING
6093000000-E	1661	0.25	TON	FERTILIZER FOR REPAIR SEEDING
6096000000-E	1662	50	LB	SEED FOR SUPPLEMENTAL SEEDING
6108000000-E	1665	0.75	TON	FERTILIZER TOPDRESSING
6117000000-N	SP	7	EA	RESPONSE FOR EROSION CONTROL
6123000000-E	1670	0.1	ACR	REFORESTATION
8035000000-N	402	1	LS	REMOVAL OF EXIST STRUCTURE AT STATION -L- 13+19.87
8121000000-N	412	1	LS	UNCLASSIFIED STR EXCAVATION AT STATION 13+19.87
8182000000-E	420	44.4	CY	CLASS A CONCRETE (BRIDGE)
8210000000-N	422	1	LS	BRIDGE APPROACH SLABS, STATION 13+19.87
8217000000-E	425	5428	LB	REINFORCING STEEL (BRIDGE)
8364000000-E	450	370	LF	HP 12x53 STEEL PILES
8391000000-N	450	14	EA	STEEL PILE POINTS
8505000000-E	460	140.26	LF	VERTICAL CONCRETE BARRIER RAIL
8590000000-E	876	60	TON	PLAIN RIP RAP, CLASS I
8608000000-E	876	91	TON	PLAIN RIP RAP, CLASS II (2" THICK)
8622000000-E	876	189	SY	GEOTEXTILE FOR DRAINAGE
8657000000-N	430	1	LS	ELASTOMERIC BEARINGS
8763000000-E	430	770	LF	3'-0" x 2'-0" PRESTRESSED CONC CORED SLABS

12/05/07
5/8/2014
R:\Roadway\Proj\8701195_rdy_psh03.dgn
thuffman

12/06/07

COMPUTED BY: C. POWELL DATE: 03-21-14
CHECKED BY: T. HUFFMAN DATE: 03-21-14

STATE OF NORTH CAROLINA
DIVISION OF HIGHWAYS

PROJECT REFERENCE NO.	SHEET NO.
17BP.14.R.12	3-A

SUMMARY OF EARTHWORK

ALIGNMENT	STATION	STATION	UNCL. EXCAV.	EMBANK. +%	BORROW	WASTE
L	10+60.00	12+84.87	74	173	99	
L	13+54.87	15+40.00	72	176	104	
SUBTOTALS:			146	349	203	
PROJECT TOTALS:			146	349	203	
5% TO REPLACE TOPSOIL ON BORROW PIT					10	
GRAND TOTALS:			146		213	
SAY:			160		240	

EST 50 CY UNDERCUT EXCAVATION (CONTINGENCY)
EST 50 CY SELECT GRANULAR MATERIAL (CONTINGENCY)
EST 50 SY GEOTEXTILE FOR SOIL STABILIZATION (CONTINGENCY)
EST 50 TONS INCIDENTAL STONE (CONTINGENCY)

Earthwork quantities are calculated by the Roadway Design Unit. These earthwork quantities are based in part on subsurface data provided by the Geotechnical Engineering Unit.

Note: Approximate quantities only. Unclassified Excavation, Borrow Excavation, Shoulder Borrow, Fine Grading, Clearing and Grubbing, Breaking of Existing Pavement, and Removal of Existing Pavement will be paid for at the contract lump sum price for "Grading."

RIGHT OF WAY AREA DATA

PARCEL NO.	PROPERTY OWNERS NAMES	TOTAL ACREAGE	AREA TAKEN	AREA REMAINING RT.	AREA REMAINING LT.	CONSTRUCTION EASEMENT	PERMANANT DRAINAGE EASEMENT	TEMPORARY DRAINAGE EASEMENT	PERMANANT UTILITY EASEMENT
1	THOMAS P. SWEET & NANCY L. SWEET	2.28 AC	1,530 SF	–	2.24 AC	576 SF	–	–	817 SF
2	ROLAND H. ENLOE AND WIFE, WILMA P. ENLOE	4.30 AC	1,482 SF	–	4.27 AC	779 SF	–	–	1,141 SF
3	SOUTHERN RAILROAD	UNK	–	UNK	–	9,876 SF	–	–	

SHOULDER BERM GUTTER SUMMARY

SURVEY LINE	STATION	STATION	LENGTH
L	13+62.89 LT	13+81.00 LT	18.11
L	13+71.12 RT	13+81.00 RT	9.88
TOTAL:			27.99
SAY:			30

LIST OF PIPES, ENDWALLS, ETC. (FOR PIPES 48" & UNDER)

STATION -L-	LOCATION (LT,RT, OR CL)	STRUCTURE NO. FROM	STRUCTURE NO. TO	TOP ELEVATION	INVERT ELEVATION	INVERT ELEVATION	SLOPE CRITICAL	DRAINAGE PIPE (RCP, CSP, CAAP, HDPE, or PVC) 12"	15"	18"	24"	30"	36"	42"	48"
13+77	LT	0401		2097.93	2094.76										
13+77		0401	0402		2094.76	2094.62			26						
13+77	RT	0402		2097.93	2094.62										
13+77		0402	0403		2094.62	2090.70			22						
14+09	CL														
TOTALS									48						

STATION -L-	C.S. PIPE (UNLESS NOTED OTHRWISE) 12" .064	15" .064	18" .064	24" .064	24"	30" .079	30"	36" .079	36"	42" .109	42"	48" .109	48"	CLASS III R.C. PIPE (UNLESS OTHERWISE NOTED) 12"	15"	18"	24"	30"	36"	42"	48"	15" SIDE DRAIN PIPE	18" SIDE DRAIN PIPE	24" SIDE DRAIN PIPE
13+77																								
13+77																								
13+77																								
13+77																								
14+09																								
TOTALS																								

STATION -L-	ENDWALLS STD. 838.01, STD. 838.11 OR STD. 838.80 (UNLESS NOTED OTHERWISE) CU. YDS. R.C.P.	C.S.P.	QUANTITIES FOR DRAINAGE STRUCTURES PER EACH (0' THRU 5.0')	* TOTAL L.F. FOR PAY QUANTITY SHALL BE COL. 'A' + (1.3 X COL.'B') LIN. *FT. A 5.0' THRU 10.0'	B 10.0' AND ABOVE	C.B. STD. 840.01 OR STD. 840.02	FRAME, GRATES AND HOOD STANDARD 840.03 TYPE OF GRATE E	F	G		CONCRETE TRANSITIONAL SECTION CATCH BASIN	DROP INLET	D.I. STD. 840.14 OR STD. 840.15	D.I. FRAME & GRATE STD. 840.16	G.D.I. TYPE "A" STD. 840.17 OR 840.26	G.D.I. TYPE "B" STD. 840.18 OR 840.27	G.D.I. TYPE "D" STD. 840.19 OR 840.28	G.D.I. FRAME WITH GRATE STD. 840.22	G.D.I. FRAME WITH TWO GRATES STD. 840.22	G.D.I. (N.S.) FRAME WITH GRATE STD. 840.24	G.D.I. (N.S.) FRAME WITH TWO GRATES STD. 840.24	J.B. STD. 840.31 OR 840.32	T.B.D.I. STD. 840.36	G.D.I. FRAME WITH TWO GRATES STD. 840.37				CORR. STEEL ELBOWS NO. & SIZE	CONC. COLLARS CL. "B" C.Y. STD 840.72	CONC. & BRICK PIPE PLUG, C.Y. STD. 840.71	PIPE REMOVAL LIN.FT.	REMARKS
13+77			1																				1	1									
13+77																																	
13+77			1																				1	1									
13+77																																	
14+09																																30	REM EX 18" RCP AND HEADWALLS
TOTALS			2																				2	2								30	

ABBREVIATIONS

C.B.	CATCH BASIN
N.D.I.	NARROW DROP INLET
D.I.	DROP INLET
G.D.I.	GRATED DROP INLET
G.D.I. (N.S.)	GRATED DROP INLET (NARROW SLOT)
J.B.	JUNCTION BOX
M.H.	MANHOLE
T.B.D.I.	TRAFFIC BEARING DROP INLET
T.B.J.B.	TRAFFIC BEARING JUNCTION BOX

"N" = DISTANCE FROM EDGE OF LANE TO FACE OF GUARDRAIL.
TOTAL SHOULDER WIDTH = DISTANCE FROM EDGE OF TRAVEL LANE TO SHOULDER BREAK POINT.
FLARE LENGTH = DISTANCE FROM LAST SECTION OF PARALLEL GUARDRAIL TO END OF GUARDRAIL.
W = TOTAL WIDTH OF FLARE FROM BEGINNING OF TAPER TO END OF GUARDRAIL.
G = GATING IMPACT ATTENUATOR TYPE 350
NG = NON-GATING IMPACT ATTENUATOR TYPE 350

GUARDRAIL SUMMARY

SURVEY LINE	BEG. STA.	END STA.	LOCATION	LENGTH STRAIGHT	SHOP CURVED	DOUBLE FACED	WARRANT POINT APPROACH END	TRAILING END	"N" DIST. FROM E.O.L.	TOTAL SHOUL. WIDTH	FLARE LENGTH APPROACH END	TRAILING END	W APPROACH END	TRAILING END	ANCHORS XI MOD	XI	GRAU 350	III	XIII	CAT-1	VI MOD	BIC	AT-1	TL-2	IMPACT ATTENUATOR TYPE 350 EA	G	NG	SINGLE FACED GUARDRAIL	REMOVE EXISTING GUARDRAIL	REMOVE AND STOCKPILE EXISTING GUARDRAIL	REMARKS
L	12+01.10	12+79.55	LT	78.45				12+79.55	4.4	7.4								1						1							BRIDGE / FILL WARRANT
L	12+09.40	12+87.85	RT	78.45			12+87.85		4.4	7.4								1						1							BRIDGE / FILL WARRANT
L	13+51.88	14+30.33	LT	78.45			13+51.88		4.4	7.4								1						1							BRIDGE / FILL WARRANT
L	13+60.18	14+38.63	RT	78.45				13+60.18	4.4	7.4								1						1							BRIDGE / FILL WARRANT
TOTALS				313.80														4						4							
LESS ANCHOR DEDUCTIONS																															
GRAU-350 (TYPE TL-2)		4 @ 25.00		-100.00																											
TYPE III		4 @ 18.75		-75.00																											
GRAND TOTALS				138.80														4						4							
SAY				150														4						4							

ADDITIONAL GUARDRAIL POSTS = 4

5/9/2014
R:\Roadway\Proj\870195_rdy_psh03-A.dgn
thuffman

PROJECT REFERENCE NO.	SHEET NO.
17BP.14.R.12	4
R/W SHEET NO.	

ROADWAY DESIGN ENGINEER: SEAL 015869, ENGINEER T. R. REID, 5/9/2014

HYDRAULICS ENGINEER: SEAL 026696, ENGINEER JEFFREY L. RECK, 5-9-14

moffatt & nichol — 1616 EAST MILLBROOK ROAD, SUITE 160, RALEIGH, NORTH CAROLINA 27609 — (919) 781-4626 VOICE (919) 781-4869 FAX

DESIGN EXCEPTION

SHOULDER WIDTH
STA. 10+60 TO STA. 11+50 LT -L-
FDPS = 0'-0"
TOTAL SHOULDER = 3'-0"

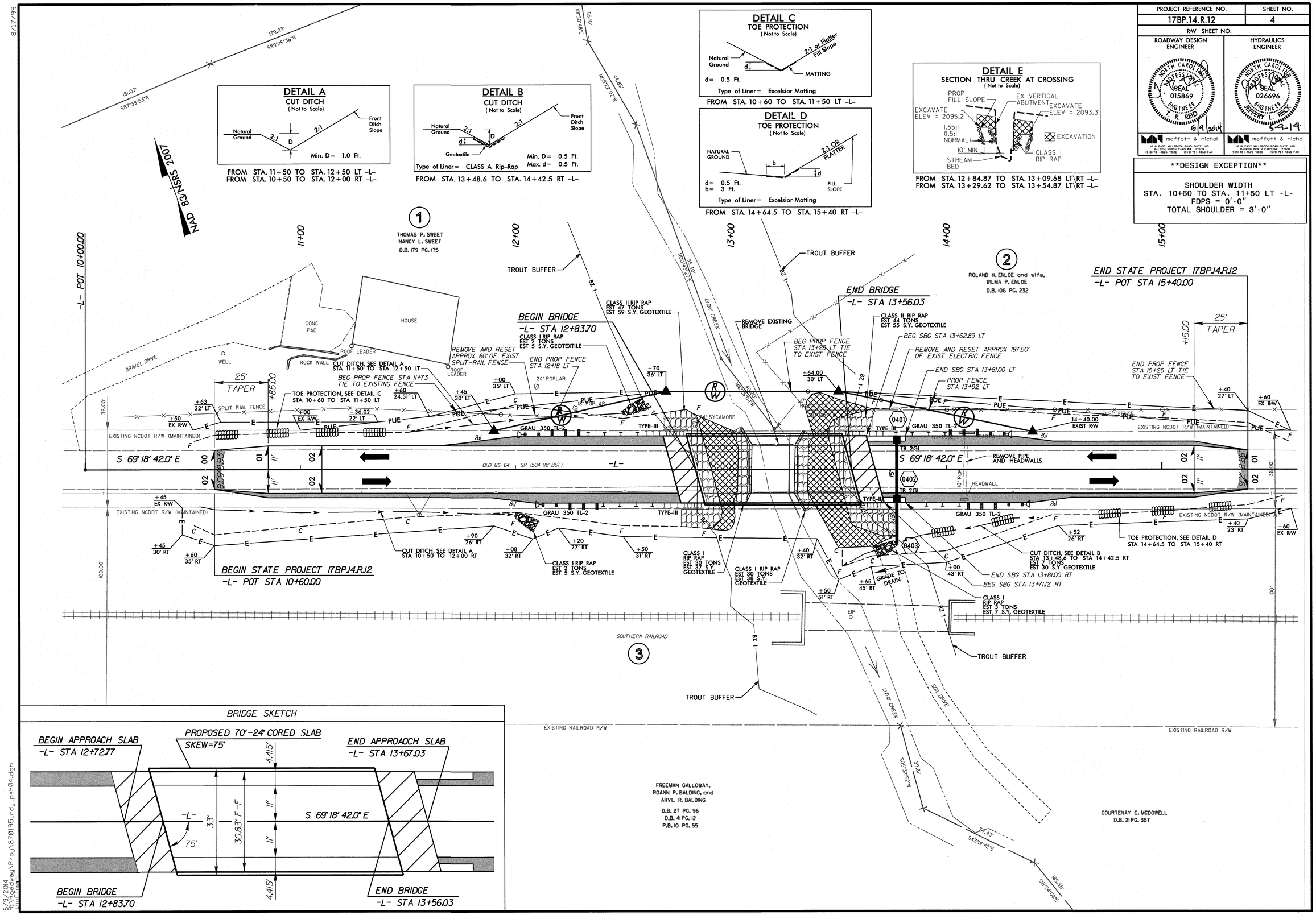

BRIDGE SKETCH

8/17/99

5/9/2014
R:\Roadway\Proj\8701195_rdy_psh04.dgn
bkfreeman

5/28/99

PROJECT REFERENCE NO.	SHEET NO.
17BP.14.R.12	5

ROADWAY DESIGN ENGINEER

NORTH CAROLINA PROFESSIONAL SEAL 015869 ENGINEER T. R. REID

5/9/2014

moffatt & nichol
1616 EAST MILLBROOK ROAD, SUITE 160
RALEIGH, NORTH CAROLINA 27609
(919) 781-4626 VOICE (919) 781-4865 FAX

HYDRAULICS ENGINEER

NORTH CAROLINA PROFESSIONAL SEAL 026696 ENGINEER JEFFREY L. BECK

5-9-14

moffatt & nichol
1616 EAST MILLBROOK ROAD, SUITE 160
RALEIGH, NORTH CAROLINA 27609
(919) 781-4626 VOICE (919) 781-4865 FAX

BRIDGE HYDRAULIC DATA

DESIGN DISCHARGE	= 780	CFS
DESIGN FREQUENCY	= 25	YRS
DESIGN HW ELEVATION	= 2094.9	FT
BASE DISCHARGE	= 1400	CFS
BASE FREQUENCY	= 100	YRS
BASE HW ELEVATION	= 2095.93	FT
OVERTOPPING DISCHARGE	= 800	CFS
OVERTOPPING FREQUENCY	= 25+	YRS
OVERTOPPING ELEVATION	= 2094.9	FT
DATE OF SURVEY	= 3/28/2012	
W.S. ELEVATION AT DATE OF SURVEY	= 2089.8	FT

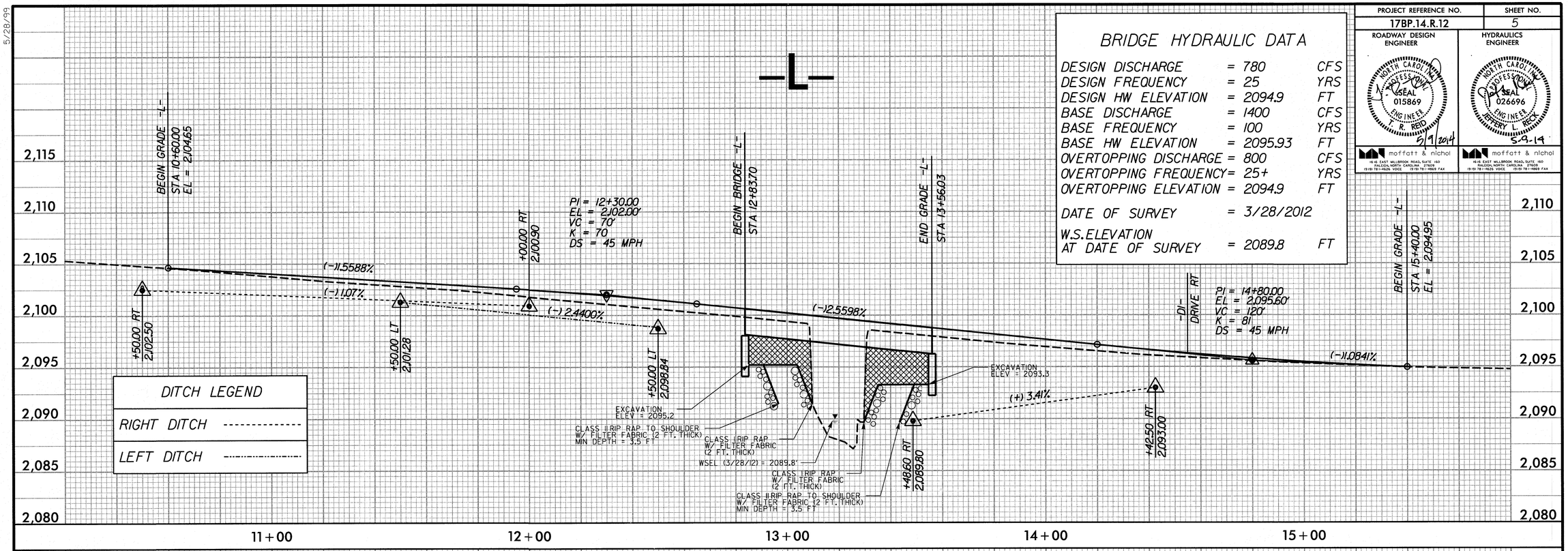

5/9/2014
R:\Roadway\Proj\8700195_rdy_psh05.dgn
bhuffman

PROJ. REFERENCE NO.	SHEET NO.
17BP.14.R.12	TMP-1

RAMEY KEMP & ASSOCIATES, INC.
Transportation Engineers
8601 Farrington Place, Suite 106
Raleigh, North Carolina 27609
919-872-5115 Tel. 919-872-5415 Fax.
www.ramey-kemp.com
NC License No. C-0910

PROJECT: 17BP.14.R.12

CONTRACT: DN00145

STATE OF NORTH CAROLINA
DIVISION OF HIGHWAYS

TRANSPORTATION MANAGEMENT PLAN

TRANSYLVANIA COUNTY

BRIDGE NO. 195 ON SR 1504 (OLD US 64)

ROADWAY STANDARD DRAWINGS

THE FOLLOWING ROADWAY STANDARDS AS SHOWN IN "ROADWAY STANDARD DRAWINGS" - PROJECT SERVICES UNIT - N.C. DEPARTMENT OF TRANSPORTATION - RALEIGH, N.C., DATED JANUARY 2012 ARE APPLICABLE TO THIS PROJECT AND BY REFERENCE HEREBY ARE CONSIDERED A PART OF THESE PLANS:

STD. NO.	TITLE
1101.01	WORK ZONE ADVANCE WORKING SIGNS FOR FACILITIES ≤ 55 MPH
1101.03	TEMPORARY ROAD CLOSURES
1101.11	TRAFFIC CONTROL DESIGN TABLES
1110.01	STATIONARY WORK ZONE SIGNS
1145.01	BARRICADES
1205.01	PAVEMENT MARKINGS - LINE TYPES AND OFFSETS
1205.02	PAVEMENT MARKINGS - TWO LANE AND MULTILANE ROADWAYS
1205.12	PAVEMENT MARKINGS - BRIDGES
1250.01	RAISED PAVEMENT MARKERS - INSTALLATION SPACING
1251.01	RAISED PAVEMENT MARKERS - (PERMANENT AND TEMPORARY)
1261.01	GUARDRAIL AND BARRIER DELINEATORS - INSTALLATION SPACING
1261.02	GUARDRAIL AND BARRIER DELINEATORS - TYPES AND MOUNTING
1262.01	GUARDRAIL END DELINEATION

INDEX OF SHEETS

SHEET NO.	TITLE
TMP-1	LIST OF APPLICABLE ROADWAY STANDARD DRAWINGS. LEGEND AND INDEX OF SHEETS
TMP-2	GENERAL NOTES, PHASING
TMP-3	DETOUR SIGNING

LEGEND

GENERAL

- DIRECTION OF TRAFFIC FLOW
- DIRECTION OF PEDESTRIAN TRAFFIC FLOW
- EXIST. PVMT.
- NORTH ARROW
- PROPOSED PVMT.
- WORK AREA
- REMOVAL

TRAFFIC CONTROL DEVICES

- BARRICADE (TYPE III)
- CONE
- DRUM — SKINNY DRUM — TUBULAR MARKER
- TEMPORARY CRASH CUSHION
- FLASHING ARROW PANEL (TYPE C)
- FLAGGER
- LAW ENFORCEMENT
- TRUCK MOUNTED IMPACT ATTENUATOR (TMIA)
- CHANGEABLE MESSAGE SIGN

TEMPORARY SIGNING

- PORTABLE SIGN
- STATIONARY SIGN
- STATIONARY OR PORTABLE SIGN

PAVEMENT MARKERS

- CRYSTAL/CRYSTAL
- CRYSTAL/RED
- YELLOW/YELLOW

PAVEMENT MARKING SYMBOLS

- PAVEMENT MARKING SYMBOLS

APPROVED: _____ DATE: _____

SEAL

NORTH CAROLINA PROFESSIONAL SEAL 022609 ENGINEER MERRICK & DUGAL, INC.
10/10/13

DIVISION OF HIGHWAYS STATE OF NORTH CAROLINA DEPARTMENT OF TRANSPORTATION WORK ZONE TRAFFIC CONTROL

ROADWAY STANDARD DRAWINGS, INDEX OF SHEETS & LEGEND

10/10/2013
TMP_87015_TC_TCP_1.dgn
User:ROBBIE

PDF created with pdfFactory Pro trial version www.pdffactory.com

PROJ. REFERENCE NO.	SHEET NO.
17BP.14.R.12	TMP-2

RAMEY KEMP & ASSOCIATES, INC.
Transportation Engineers
5808 Faringdon Place, Suite 100
Raleigh, North Carolina 27609
919-872-5115 Tel. 919-878-9416 Fax.
www.rameykemp.com
NC License No. C-0910

GENERAL NOTES

CHANGES MAY BE REQUIRED WHEN PHYSICAL DIMENSIONS IN THE DETAIL DRAWING, STANDARD DETAILS AND ROADWAY DETAILS ARE NOT ATTAINABLE TO MEET FIELD CONDITIONS OR RESULT IN DUPLICATE OR UNDESIRED OVERLAPPING OF DEVICES. MODIFICATION MAY INCLUDE: MOVING, SUPPLEMENTING, COVERING, OR REMOVAL OF DEVICES AS DIRECTED BY THE ENGINEERING.

THE FOLLOWING GENERAL NOTES APPLY AT ALL TIMES FOR THE DURATION OF THE CONSTRUCTION PROJECT EXCEPT WHEN OTHERWISE NOTED IN THE PLAN OR DIRECTED BY THE ENGINEER.

TRAFFIC PATTERN ALTERATIONS

A) NOTIFY THE ENGINEER TWENTY ONE (21) CALENDAR DAYS PRIOR TO ANY TRAFFIC PATTERN ALTERATION SIGNING.

SIGNING

B) INSTALL ADVANCED WORK ZONE WARNING SIGNS WHEN WORK IS WITHIN 40 FT FROM THE EDGE OF TRAVEL LANE AND NO MORE THAN THREE (3) DAYS PRIOR TO THE BEGINNING OF CONSTRUCTION.

C) PROVIDE SIGNING AND DEVICES REQUIRED TO CLOSE THE ROAD ACCORDING TO THE ROADWAY STANDARD DRAWINGS AND TRAFFIC CONTROL PLANS.

PROVIDE SIGNING REQUIRED FOR THE OFF-SITE DETOUR ROUTE AS SHOWN IN THE TRAFFIC CONTROL PLANS.

D) COVER OR REMOVE ALL SIGNS AND DEVICES REQUIRED TO CLOSE THE ROAD WHEN ROAD CLOSURE IS NOT IN OPERATION.

COVER OR REMOVE ALL SIGNS AND DEVICES REQUIRED FOR THE OFF-SITE DETOUR WHEN THE DETOUR IS NOT IN OPERATION.

E) ENSURE ALL NECESSARY SIGNING IS IN PLACE PRIOR TO ALTERING ANY TRAFFIC PATTERN.

F) PLACE TYPE III BARRICADES, WITH "ROAD CLOSED" SIGN R11-2 ATTACHED, OF SUFFICIENT LENGTH TO CLOSE ENTIRE ROAD.

PAVEMENT MARKINGS AND MARKERS

G) INSTALL PAVEMENT MARKINGS ON THE FINAL SURFACE AS FOLLOWS:

ROAD NAME	MARKING	MARKERS
SR 1504	PAINT	RAISED

H) TIE PROPOSED PAVEMENT MARKING LINES TO EXISTING PAVEMENT MARKING LINES.

I) REMOVE/REPLACE ANY CONFLICTING/DAMAGED PAVEMENT MARKINGS.

J) PASSING ZONE WILL BE DETERMINED IN THE FIELD AND MUST BE APPROVED BY THE ENGINEER.

PHASING

PHASE I

PRIOR TO ANY CONSTRUCTION OPERATIONS, PLACE AND COVER OFF-SITE DETOUR SIGNING AS SHOWN ON TMP-3 AND IN ACCORDANCE WITH RSD 1101.03 (SHEET 1 OF 9).

PHASE II

USING OFF-SITE DETOUR, UNCOVER DETOUR SIGNS, CLOSE -L- (SR 1504 / OLD US 64) TO TRAFFIC AND CONSTRUCT BRIDGE, APPROACHES AND ROADWAY UP TO AND INCLUDING FINAL LAYER OF SURFACE COURSE.

PHASE III

UPON COMPLETION OF BRIDGE, APPROACHES AND ROADWAY, PLACE FINAL PAVEMENT MARKING IN ACCORDANCE WITH RSD 1205.02.AND 1205.12. REMOVE BARRICADES AND DETOUR SIGNS AND OPEN -L- (SR 1504/ OLD US 64) TO TRAFFIC.

APPROVED:_____ DATE:_____

SEAL

NORTH CAROLINA PROFESSIONAL SEAL 022609 ENGINEER MERRICK A DUGAL, III

10/10/13

DIVISION OF HIGHWAYS
STATE OF NORTH CAROLINA
DEPARTMENT OF TRANSPORTATION
WORK ZONE TRAFFIC CONTROL

GENERAL NOTES AND PHASING

10/10/2013
\87095_TC_TCP_2.dgn
User:bcatts

PDF created with pdfFactory Pro trial version www.pdffactory.com

PROJ. REFERENCE NO.	SHEET NO.
17BP.14.R.12	TMP-3

RAMEY KEMP & ASSOCIATES, INC.
Transportation Engineers
5808 Faringdon Place, Suite 100
Raleigh, North Carolina 27609
919-872-5115 Tel. 919-878-8416 Fax.
www.rameykemp.com
NC License No. C-0910

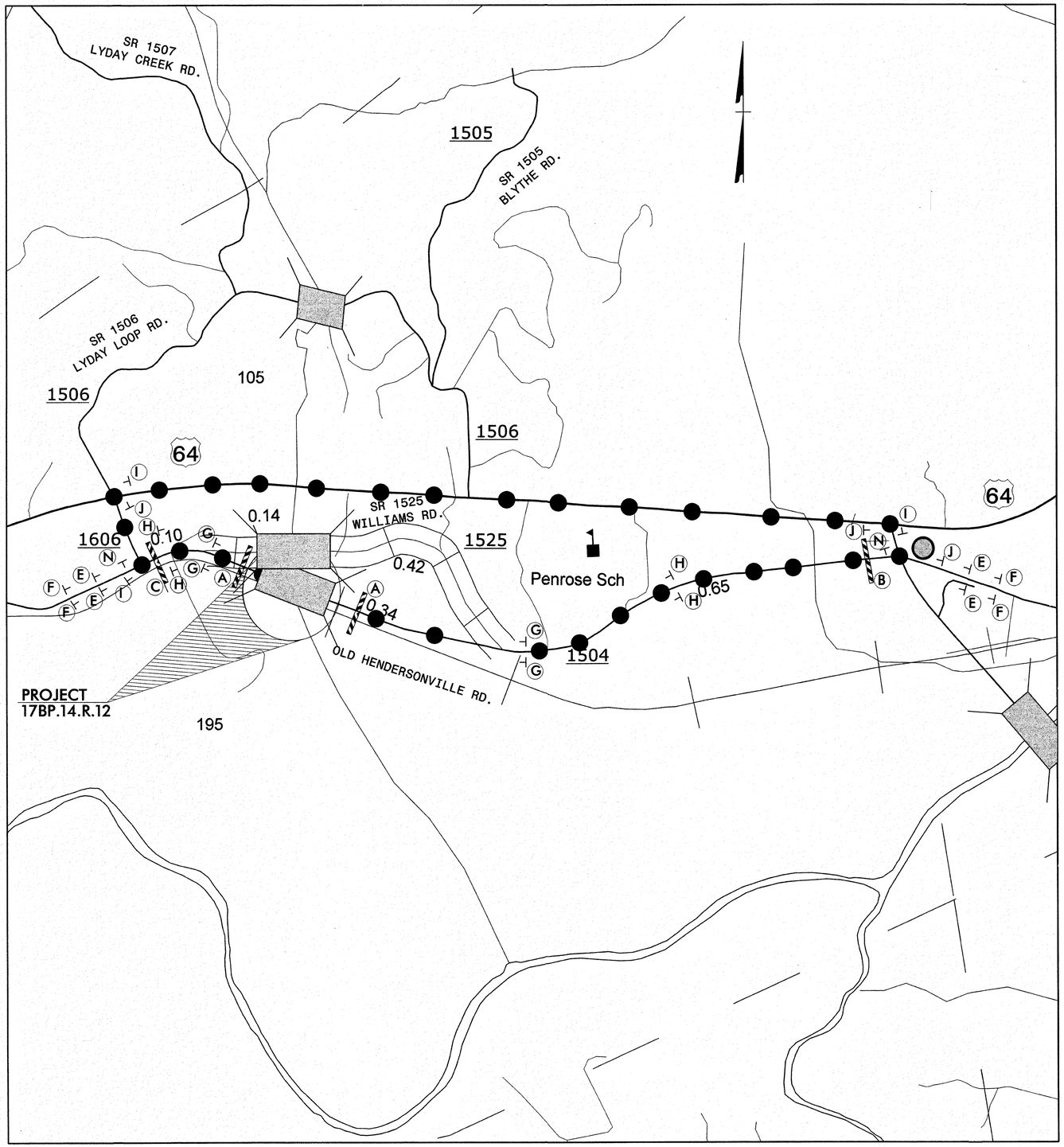

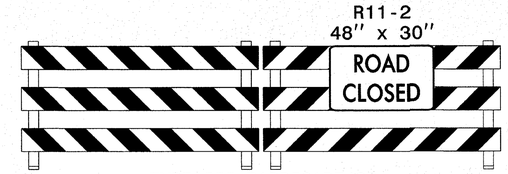

TYPE III BARRICADE(S)
(A)

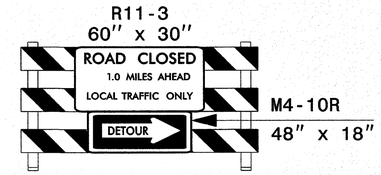

TYPE III BARRICADE
(B)

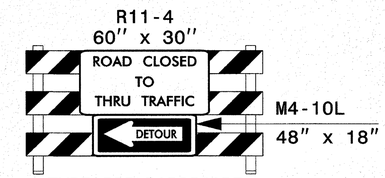

TYPE III BARRICADE
(C)

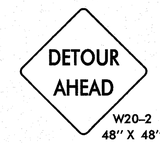

W20-2
48" X 48"
(E)

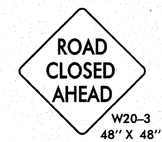

W20-3
48" X 48"
(F)

W20-3
48" X 48"
(G)

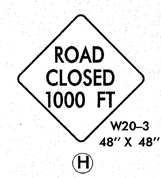

W20-3
48" X 48"
(H)

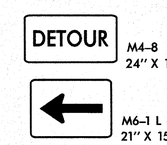

M4-8
24" X 12"

M6-1 L
21" X 15"
(I)

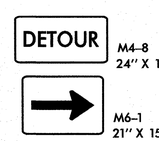

M4-8
24" X 12"

M6-1
21" X 15"
(J)

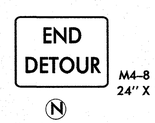

M4-8 A
24" X 18"
(N)

PROPOSED DETOUR

DETOUR ROUTE

DETOUR LENGTH 2 MILE

APPROVED:_____ DATE:_____

SEAL

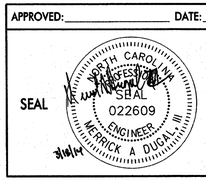

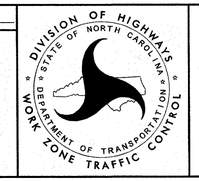

3/18/2014
S:\2012 Projects\12085 NCDOT 17BP - Bridge No 195 Transylvania County NC\Traffic\Traffic Control\870195_TC_TCP_3.dgn
User:bpalis

PDF created with pdfFactory Pro trial version www.pdffactory.com

8/17/99

PROJECT: 17BP.14.R.12

CONTRACT: DN00145

PROJECT REFERENCE NO.	SHEET NO.
17BP.14.R.12	PMP-01

APPROVED: _____

DATE: _____

SEAL

NORTH CAROLINA PROFESSIONAL SEAL 015869 ENGINEER J. R. REID

5/9/2014

moffatt & nichol
1616 EAST MILLBROOK ROAD, SUITE 160
RALEIGH, NORTH CAROLINA 27609
(919) 781-4626 VOICE (919) 781-4869 FAX

STATE OF NORTH CAROLINA
DEPARTMENT OF TRANSPORTATION

PAVEMENT MARKING PLANS

LOCATION: BRIDGE NO. 195 ON SR 1504 (OLD US 64) OVER LYDAY CREEK

ROADWAY STANDARD DRAWINGS

THE FOLLOWING ROADWAY STANDARDS AS SHOWN IN "ROADWAY STANDARD DRAWINGS" - PROJECT SERVICES UNIT - N.C. DEPARTMENT OF TRANSPORTATION - RALEIGH, N.C., DATED JANUARY 2012 ARE APPLICABLE TO THIS PROJECT AND BY REFERENCE HEREBY ARE CONSIDERED A PART OF THESE PLANS:

STD. NO.	TITLE
1205.01	PAVEMENT MARKINGS - LINE TYPES AND OFFSETS
1205.02	PAVEMENT MARKINGS - TWO LANE AND MULTILANE ROADWAYS

PAVEMENT MARKING SCHEDULE

SYMBOL	DESCRIPTION
PA - WHITE EDGE LINE (4")	PAINT
PI - YELLOW DOUBLE CENTER LINE (4")	PAINT

GENERAL NOTES

THE FOLLOWING GENERAL NOTES APPLY AT ALL TIMES FOR THE DURATION OF THE CONSTRUCTION PROJECT, EXCEPT WHEN OTHERWISE NOTED IN THE PLAN, OR DIRECTED BY THE ENGINEER.

A) INSTALL PAVEMENT MARKINGS AND PAVEMENT MARKERS ON THE FINAL SURFACE AS FOLLOWS:

ROAD NAME	MARKING	MARKER
SR 1504	PAINT	NONE

B) TIE PROPOSED PAVEMENT MARKING LINES TO EXISTING PAVEMENT MARKING LINES.

C) REMOVE / REPLACE ANY CONFLICTING / DAMAGED PAVEMENT MARKINGS AND MARKERS.

D) PASSING ZONES WILL BE DETERMINED IN THE FIELD AND MUST BE APPROVED BY THE ENGINEER.

INDEX

SHEET NO.	DESCRIPTION
PMP-1	PAVEMENT MARKING PLAN COVER SHEET NOTES & SCHEDULE
PMP-2	PAVEMENT MARKING DETAIL

5/9/2014
R:\Roadway\Proj\8701195_rdy_pmp01.dgn
bwilliams

8/17/99

PROJECT REFERENCE NO.	SHEET NO.
17BP.14.R.12	PMP-02

APPROVED: _____

DATE: _____

SEAL

NORTH CAROLINA PROFESSIONAL SEAL 015869 ENGINEER T. R. REID

5/9/2014

moffatt & nichol

1616 EAST MILLBROOK ROAD, SUITE 160
RALEIGH, NORTH CAROLINA 27609
(919) 781-4626 VOICE (919) 781-4869 FAX

20 10 0 20 40
SCALE

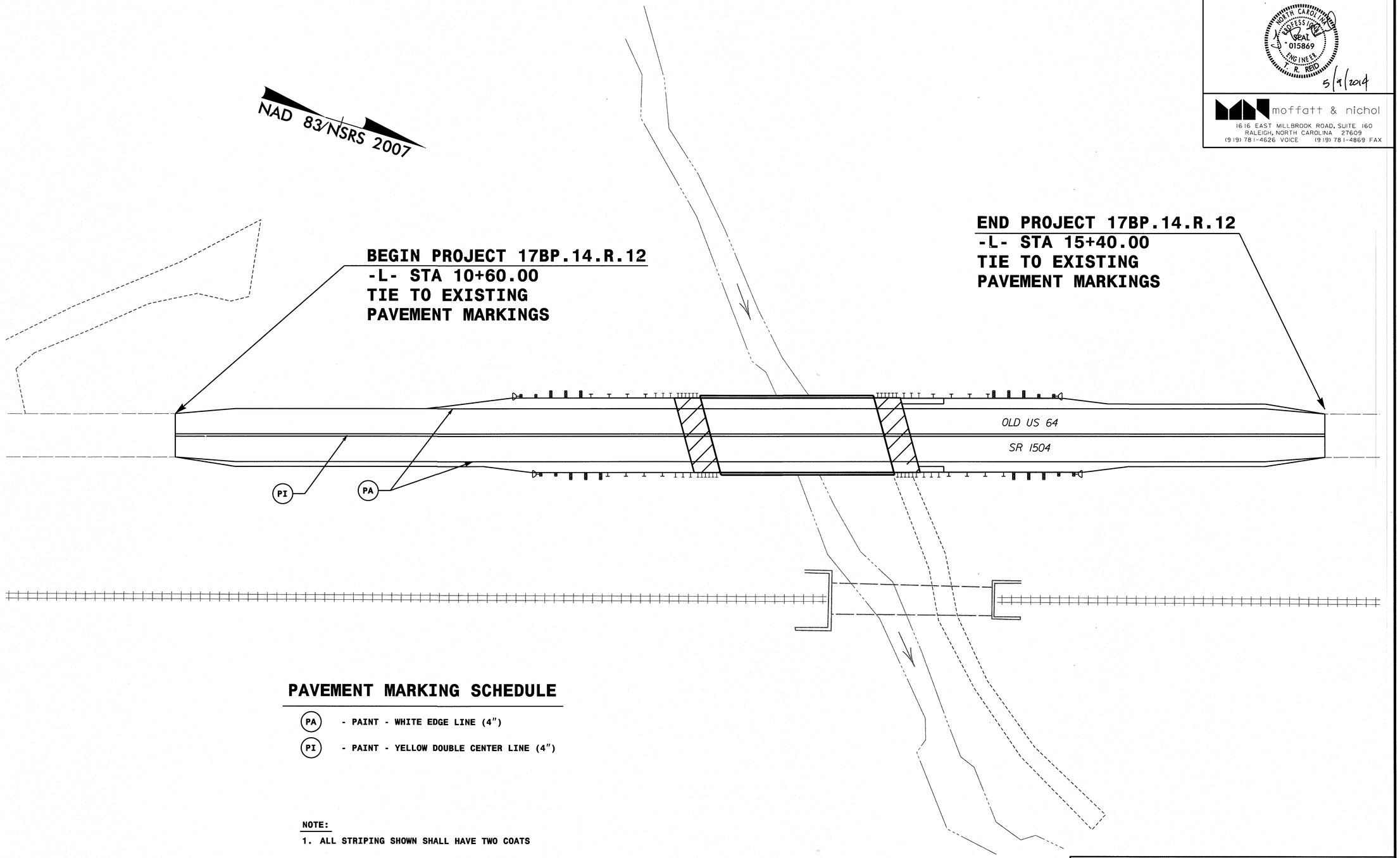

PAVEMENT MARKING SCHEDULE

PA - PAINT - WHITE EDGE LINE (4")

PI - PAINT - YELLOW DOUBLE CENTER LINE (4")

NOTE:

1. ALL STRIPING SHOWN SHALL HAVE TWO COATS

PAVEMENT MARKING DETAIL OLD US 64

5/9/2014
R:\Roadway\Proj\8701195_rdy_pmp02.dgn
bmitman

PROJECT: 17BP.14.R.12

CONTRACT: DN00145

BRIDGE 870195

STATE	STATE PROJECT REFERENCE NO.	SHEET NO.	TOTAL SHEETS
N.C.	17BP.14.R.12	EC-1	

STATE PROJ. NO.	F. A. PROJ. NO.	DESCRIPTION
17BP.14.R.12		PE
17BP.14.R.12		ROW & UTIL
17BP.14.R.12		CONSTR

STATE OF NORTH CAROLINA
DIVISION OF HIGHWAYS

PLAN FOR PROPOSED
HIGHWAY EROSION CONTROL

TRANSYLVANIA COUNTY

LOCATION: BRIDGE NO. 195 ON SR 1504 (OLD US 64) OVER LYDAY CREEK

TYPE OF WORK: PAVING, GRADING, GUARDRAIL, DRAINAGE AND STRUCTURE

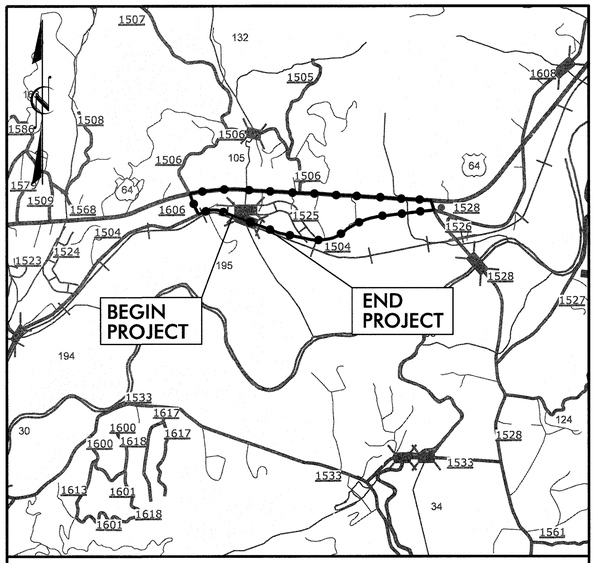

VICINITY MAP

DETOUR

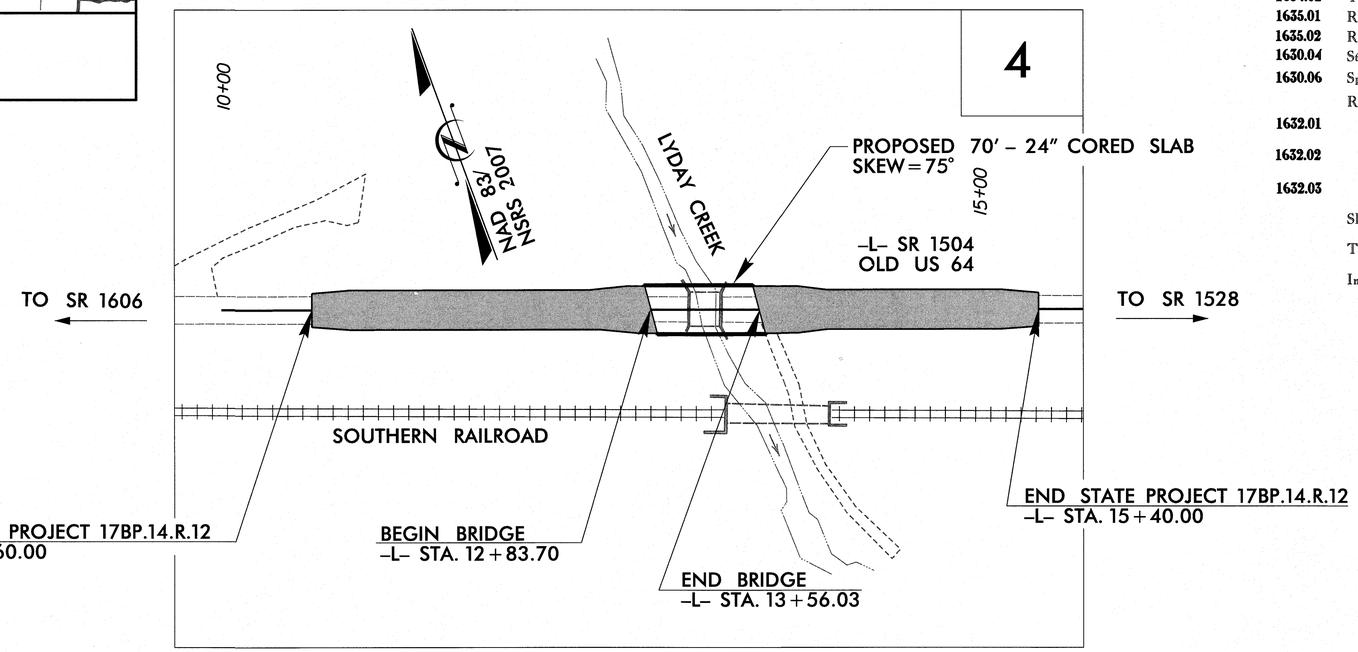

EROSION AND SEDIMENT CONTROL MEASURES

Std. #	Description	Symbol
1630.03	Temporary Silt Ditch	TSD
1630.05	Temporary Diversion	TD
1605.01	Temporary Silt Fence	
1606.01	Special Sediment Control Fence	
1622.01	Temporary Berms and Slope Drains	
1630.02	Silt Basin Type B	
1633.01	Temporary Rock Silt Check Type-A	
	Temporary Rock Silt Check Type-A with Matting and Polyacrylamide (PAM)	
1633.02	Temporary Rock Silt Check Type-B	
	Wattle / Coir Fiber Wattle	SW CFW
	Wattle / Coir Fiber Wattle with Polyacrylamide (PAM)	
1634.01	Temporary Rock Sediment Dam Type-A	
1634.02	Temporary Rock Sediment Dam Type-B	
1635.01	Rock Pipe Inlet Sediment Trap Type-A	
1635.02	Rock Pipe Inlet Sediment Trap Type-B	
1630.04	Stilling Basin	
1630.06	Special Stilling Basin	
	Rock Inlet Sediment Trap:	
1632.01	Type A	A
1632.02	Type B	B
1632.03	Type C	C
	Skimmer Basin	
	Tiered Skimmer Basin	
	Infiltration Basin	

THIS PROJECT CONTAINS EROSION CONTROL PLANS FOR CLEARING AND GRUBBING PHASE OF CONSTRUCTION.

THIS PROJECT HAS BEEN DESIGNED TO SENSITIVE WATERSHED STANDARDS.

ENVIRONMENTALLY SENSITIVE AREA(S) EXIST ON THIS PROJECT

Refer To E. C. Special Provisions for Special Considerations.

GRAPHIC SCALE

10 0 20
PLANS

10 0 20
PROFILE (HORIZONTAL)

2.5 0 5
PROFILE (VERTICAL)

ROADSIDE ENVIRONMENTAL UNIT
DIVISION OF HIGHWAYS
STATE OF NORTH CAROLINA

THESE EROSION AND SEDIMENT CONTROL PLANS COMPLY WITH THE REGULATIONS SET FORTH BY THE NCG-010000 GENERAL CONSTRUCTION PERMIT EFFECTIVE AUGUST 3, 2011 ISSUED BY THE NORTH CAROLINA DEPARTMENT OF ENVIRONMENT AND NATURAL RESOURCES DIVISION OF WATER QUALITY.

PREPARED BY: moffatt & nichol
1616 EAST MILLBROOK ROAD, SUITE 160
RALEIGH, NORTH CAROLINA 27609
(919) 781-4626 VOICE (919) 781-4869 FAX

DESIGN BY: *LEAH M. YOUNG, PE*
NCDOT LEVEL III: DESIGNER OF EROSION AND SEDIMENT CONTROL PLANS CERT #3157

REVIEWED BY: *JEFFREY L. RECK, PE*
NCDOT LEVEL III-A: DESIGNER OF EROSION AND SEDIMENT CONTROL PLANS CERT #132

Prepared for the Office of:

ROADSIDE ENVIRONMENTAL UNIT
1 South Wilmington St.
Raleigh, NC 27611

2012 STANDARD SPECIFICATIONS

Roadway Standard Drawings

The following roadway english standards as appear in "Roadway Standard Drawings"– Roadway Design Unit – N. C. Department of Transportation – Raleigh, N. C., dated January 2012 and the latest revison thereto are applicable to this project and by reference hereby are considered a part of these plans.

1605.01 Temporary Silt Fence
1606.01 Special Sediment Control Fence
1622.01 Temporary Berms and Slope Drains
1631.01 Matting Installation
1632.03 Rock Inlet Sediment Trap Type C
1633.01 Temporary Rock Silt Check Type A
1633.02 Temporary Rock Silt Check Type B

5/9/2014
R:\Roadway\Proj\870195_rev_psh01_title.dgn

PROJECT REFERENCE NO.	SHEET NO.
17BP.14.R.12	EC-3

DIVISION OF HIGHWAYS
STATE OF NORTH CAROLINA

SOIL STABILIZATION SUMMARY SHEET

MATTING FOR EROSION CONTROL

CONST SHEET NO.	LINE	FROM STATION	TO STATION	SIDE	ESTIMATE (SY)
4	-L-	11+50	12+50	LT	100
4	-L-	10+50	12+00	RT	150
4	-L-	10+60	11+50	LT	22
4	-L-	14+64.5	15+40	RT	68
				SUBTOTAL	340
MISCELLANEOUS MATTING TO BE INSTALLED AS DIRECTED BY THE ENGINEER					750
				TOTAL	1090
				SAY	1280

PERMANENT SOIL REINFORCEMENT MAT

CONST SHEET NO.	LINE	FROM STATION	TO STATION	SIDE	ESTIMATE (SY)
				SUBTOTAL	
		ADDITIONAL PSRM TO BE INSTALLED			
				TOTAL	
				SAY	

8/17/99

5/9/2014
R:\Roadside\870195_rev_psh03_matting.dgn
bhuffman

DIVISION OF HIGHWAYS
STATE OF NORTH CAROLINA

SOIL STABILIZATION TIMEFRAMES

SITE DESCRIPTION	STABILIZATION TIME	TIMEFRAME EXCEPTIONS
PERIMETER DIKES, SWALES, DITCHES AND SLOPES	7 DAYS	NONE
HIGH QUALITY WATER (HQW) ZONES	7 DAYS	NONE
SLOPES STEEPER THAN 3:1	7 DAYS	IF SLOPES ARE 10' OR LESS IN LENGTH AND ARE NOT STEEPER THAN 2:1, 14 DAYS ARE ALLOWED.
SLOPES 3:1 OR FLATTER	14 DAYS	7 DAYS FOR SLOPES GREATER THAN 50' IN LENGTH.
ALL OTHER AREAS WITH SLOPES FLATTER THAN 4:1	14 DAYS	NONE, EXCEPT FOR PERIMETERS AND HQW ZONES.

8/17/99
5/9/2014
R:\Roadside\870195_rev_psh03A_stabilization.dgn
bhuffman

PROJECT REFERENCE NO.	SHEET NO.
17BP.14.R.12	EC-4\CONST-4

NOTE:
PERIMETER EROSION CONTROL MEASURES SHALL BE INSTALLED DURING CLEARING AND GRUBBING PHASE.

DETAIL A
CUT DITCH
(Not to Scale)

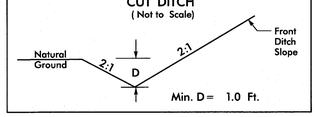

Min. D= 1.0 Ft.

FROM STA. 11+50 TO STA. 12+50 LT -L-
FROM STA. 10+50 TO STA. 12+00 RT -L-

DETAIL B
CUT DITCH
(Not to Scale)

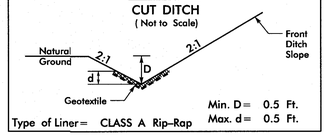

Min. D= 0.5 Ft.
Max. d= 0.5 Ft.
Type of Liner= CLASS A Rip-Rap

FROM STA. 13+48.6 TO STA. 14+42.5 RT -L-

DETAIL C
TOE PROTECTION
(Not to Scale)

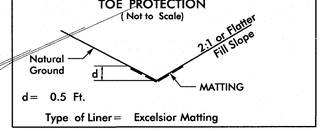

d= 0.5 Ft.
Type of Liner= Excelsior Matting

FROM STA. 10+60 TO STA. 11+50 LT -L-

DETAIL D
TOE PROTECTION
(Not to Scale)

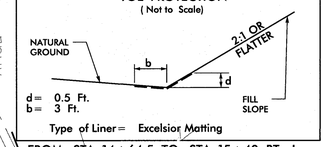

d= 0.5 Ft.
b= 3 Ft.
Type of Liner= Excelsior Matting

FROM STA. 14+64.5 TO STA. 15+40 RT -L-

DETAIL E
SECTION THRU CREEK AT CROSSING
(Not to Scale)

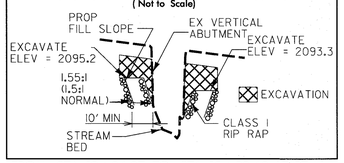

FROM STA. 12+84.87 TO STA. 13+09.68 LT\RT -L-
FROM STA. 13+29.62 TO STA. 13+54.87 LT\RT -L-

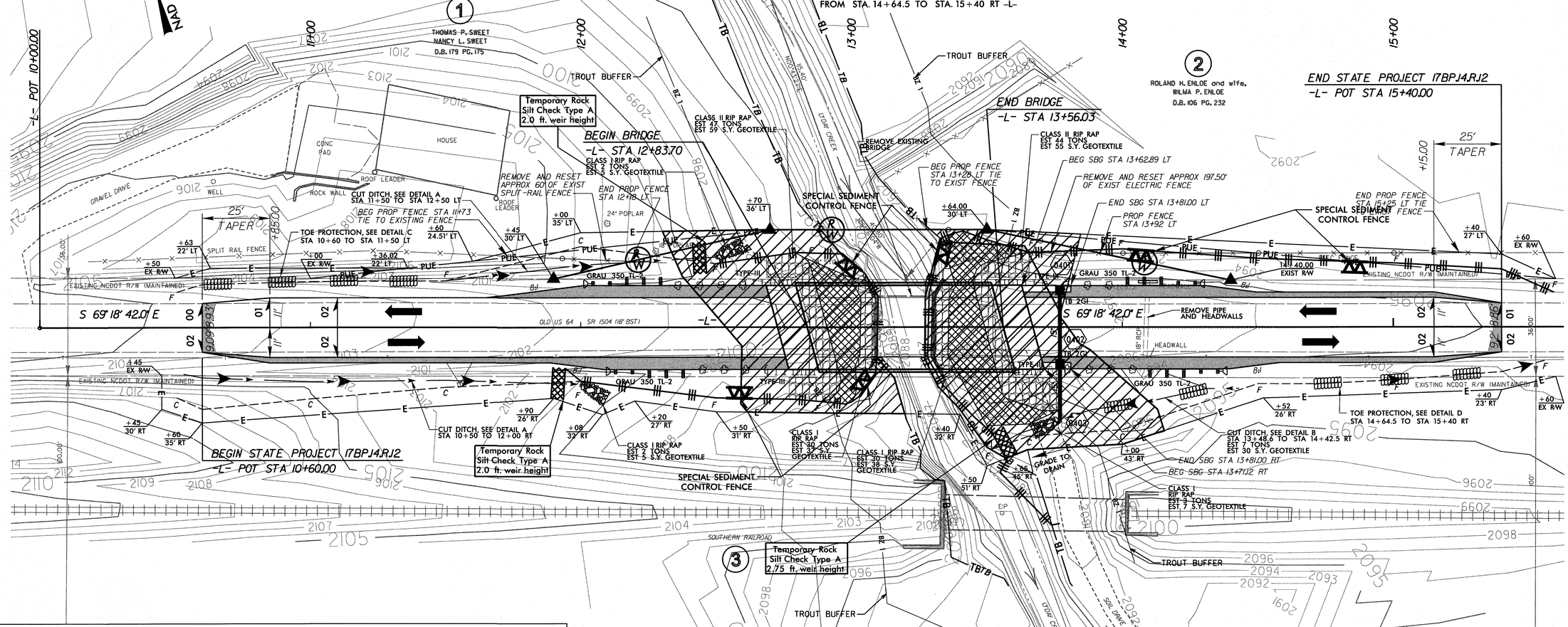

CLEARING AND GRUBBING EROSION CONTROL FOR CONSTRUCTION SHEET 4

NOTE:
PLACE TEMPORARY ROCK SILT CHECKS TYPE - A AT DRAINAGE OUTLETS.

TROUT STREAM BUFFER ZONE

BRIDGE SKETCH

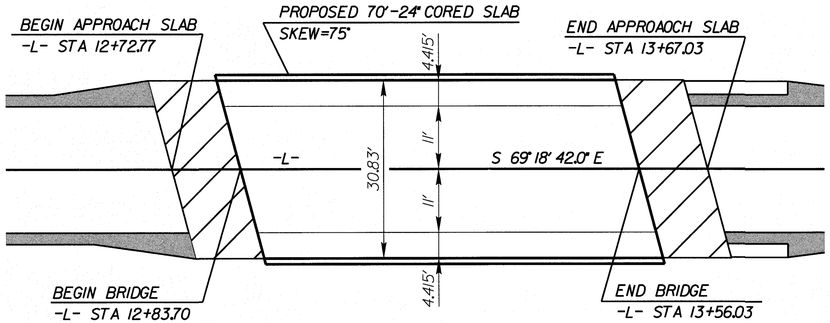

8/17/99

5/9/2014
R:\Roadside\870195_reu_psh04_cg.dgn

PROJECT REFERENCE NO.	SHEET NO.
17BP.14.R.12	EC-5\CONST-4

8/17/99

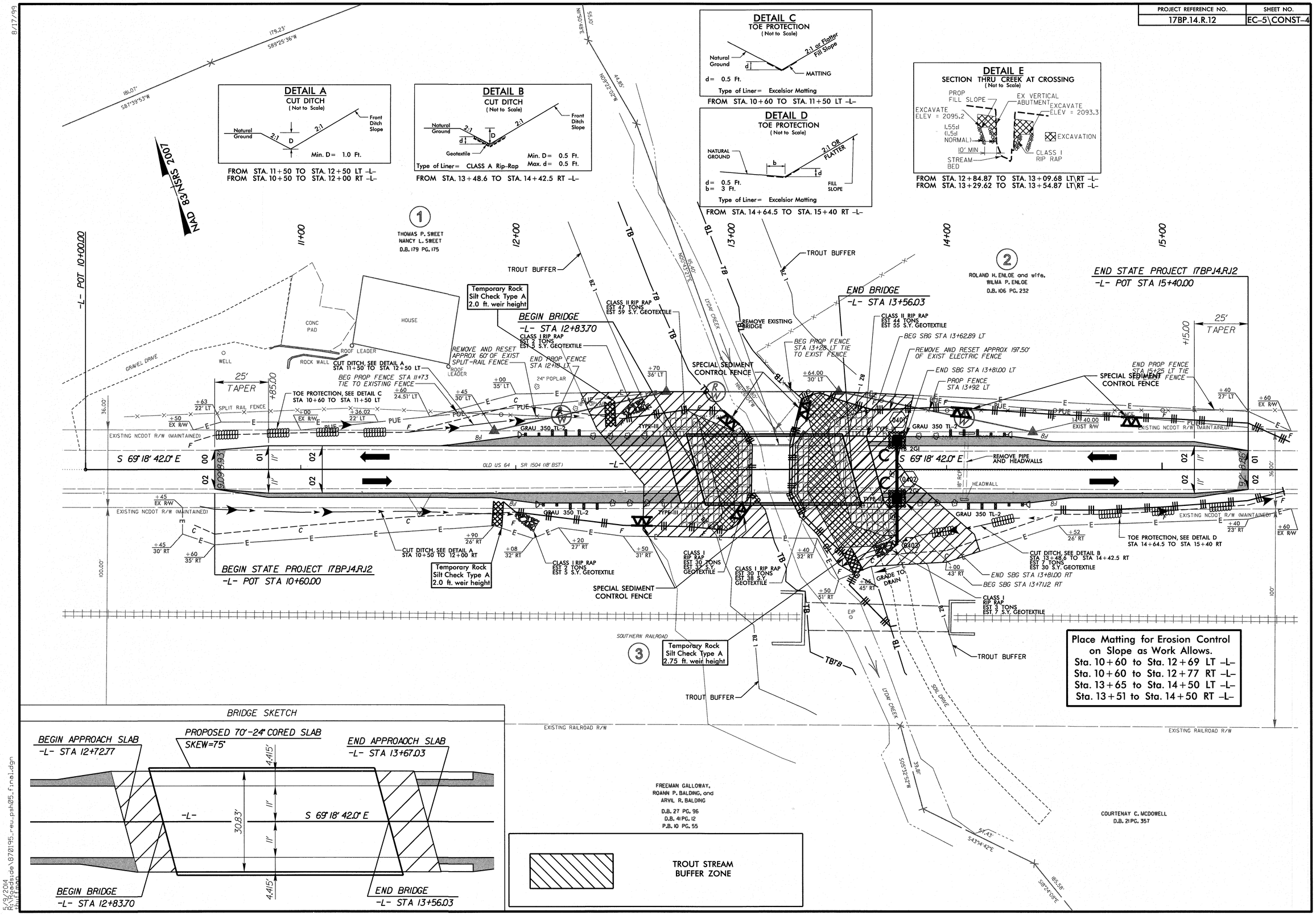

5/3/2014
R:\Roadside\870195_reu_psh05_final.dgn
hilt1mon

09/08/99

PROJECT: 17BP.14.R.12

CONTRACT: DN00145

See Sheet 1-A For Index of Sheets
See Sheet 1-B For Conventional Symbols

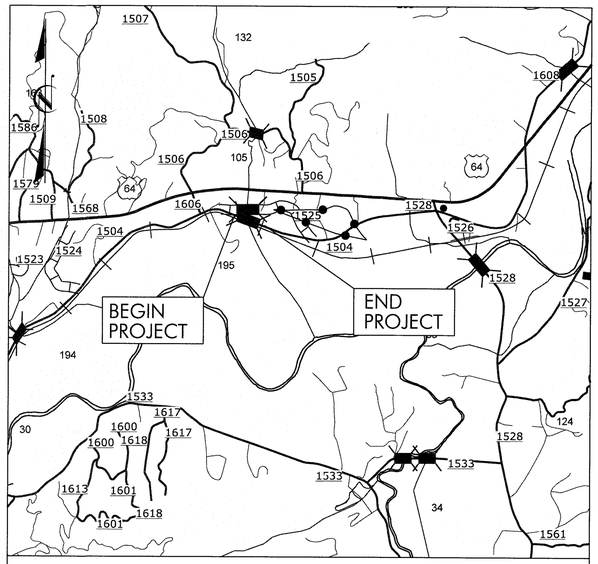

VICINITY MAP

DETOUR

STATE OF NORTH CAROLINA
DIVISION OF HIGHWAYS

T.I.P. NO.	SHEET NO.
17BP.14.R.12	UO–1

UTILITIES BY OTHERS PLANS
TRANSYLVANIA COUNTY

LOCATION: BRIDGE No. 195 ON SR 1504 (OLD US 64) OVER LYDAY CREEK

TYPE OF WORK: UTILITIES BY OTHERS

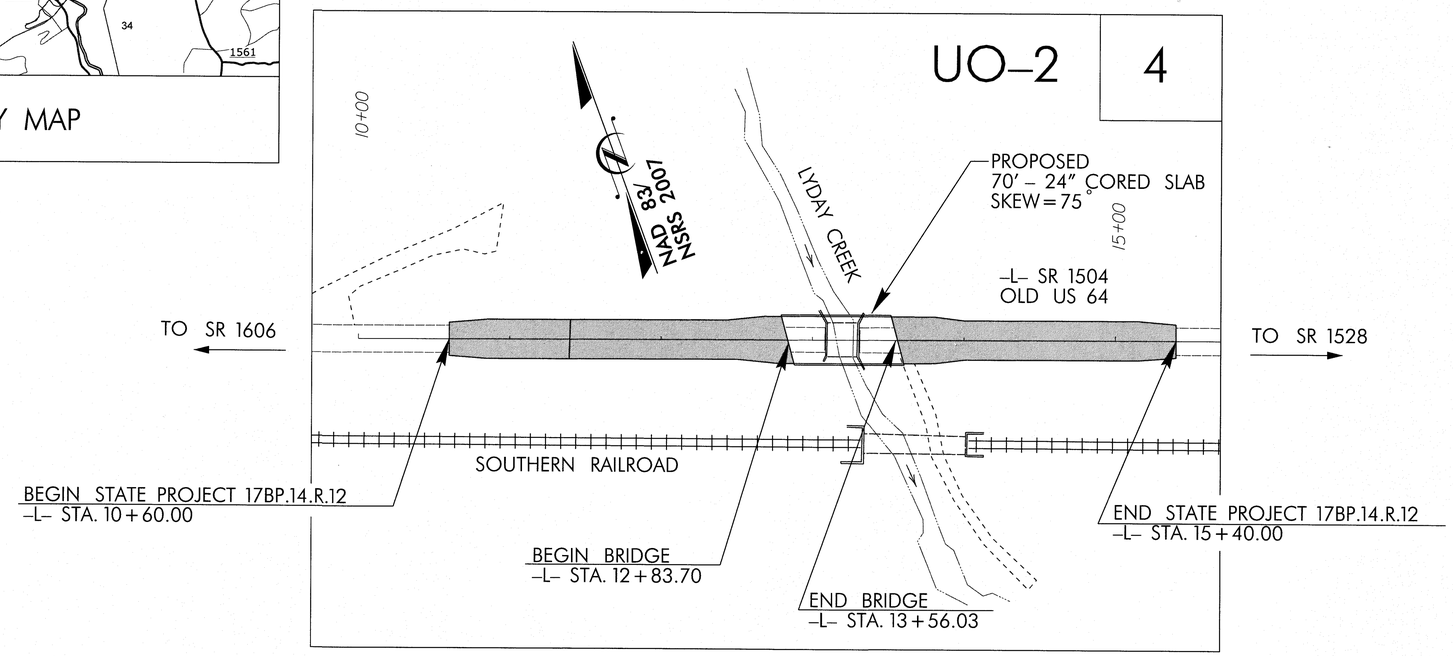

GRAPHIC SCALES

20 10 0 20 40
PLANS

INDEX OF SHEETS

SHEET NO.	DESCRIPTION
UO–1	TITLE SHEET
UO–2	UTILITIES BY OTHERS PLAN SHEETS

UTILITY OWNERS ON PROJECT

(1) TELEPHONE & CATV – COMPORIUM

UTILITIES BY OTHER PLANS PREPARED BY:
DAVIS • MARTIN • POWELL
ENGINEERS & SURVEYORS
6415 OLD PLANK RD., HIGH POINT, NC 27265
PHONE: (336)886-4821 FAX: (336)886-4458
WWW.DMP-INC.COM LICENSE: F-0245

STATE OF NORTH CAROLINA • DEPARTMENT OF TRANSPORTATION •

25-APR-2014 14:16
P:\20IR\R0203\Civil\17BP.14.R.12.ut_U01_psh.dgn
Davis-Martin-Powell and Associates

PROJECT REFERENCE NO.	SHEET NO.
17BP.14.R.12	UO-2

UTILITIES BY OTHERS

NOTE:
ALL PROPOSED UTILITY WORK SHOWN ON THIS SHEET WILL BE DONE BY OTHERS

LEGEND

-O- PROPOSED JOINT-USE UTILITY POLE

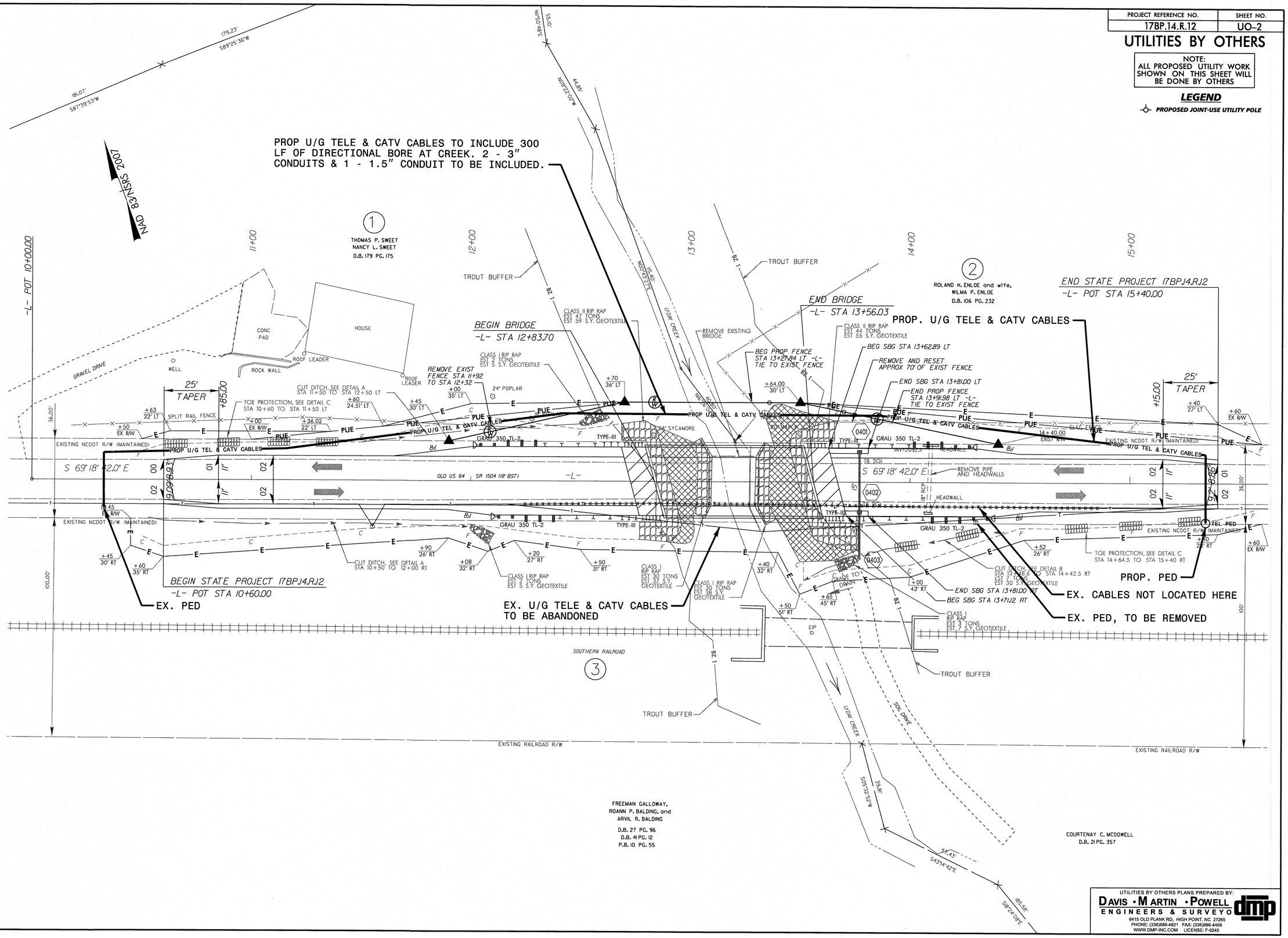

UTILITIES BY OTHERS PLANS PREPARED BY:
DAVIS • MARTIN • POWELL
ENGINEERS & SURVEYO
6415 OLD PLANK RD, HIGH POINT, NC 27265
PHONE: (336)886-4821 FAX: (336)886-4458
WWW.DMP-INC.COM LICENSE: F-0245

8/17/99

25-APR-2014 14:16
P:\2011\110203\Civil\17BP.14.R.12.ut.rdy4.U02_psh.dgn
Davis-Martin-Powell and Associates

PROJ. REFERENCE NO.	SHEET NO.
17BP.14.R.12	X-A

STATE OF NORTH CAROLINA
DIVISION OF HIGHWAYS

CROSS-SECTION SUMMARY

NOTE: EMBANKMENT COLUMN INCLUDES BACKFILL FOR UNDERCUT

Station L	Uncl. Exc. (cu. yd.)	Embt (cu. yd.)
10+60.00000	0	0
11+00.00000	19	12
11+50.00000	14	19
12+00.00000	22	23
12+50.00000	19	51
12+79.39000	0	45

Station L	Uncl. Exc. (cu. yd.)	Embt (cu. yd.)
13+65.61000	0	0
14+00.00000	35	50
14+50.00000	29	56
15+00.00000	4	31
15+40.00000	4	16

0 2.5 5	PROJ. REFERENCE NO.	SHEET NO.
	17BP.14.R.12	X-1

Note: Approximate quantities only. Unclassified Excavation, Borrow Excavation, Shoulder Borrow, Fine Grading, Clearing and Grubbing, Breaking of Existing Pavement, and Removal of Existing Pavement will be paid for at the contract lump sum price for "Grading."

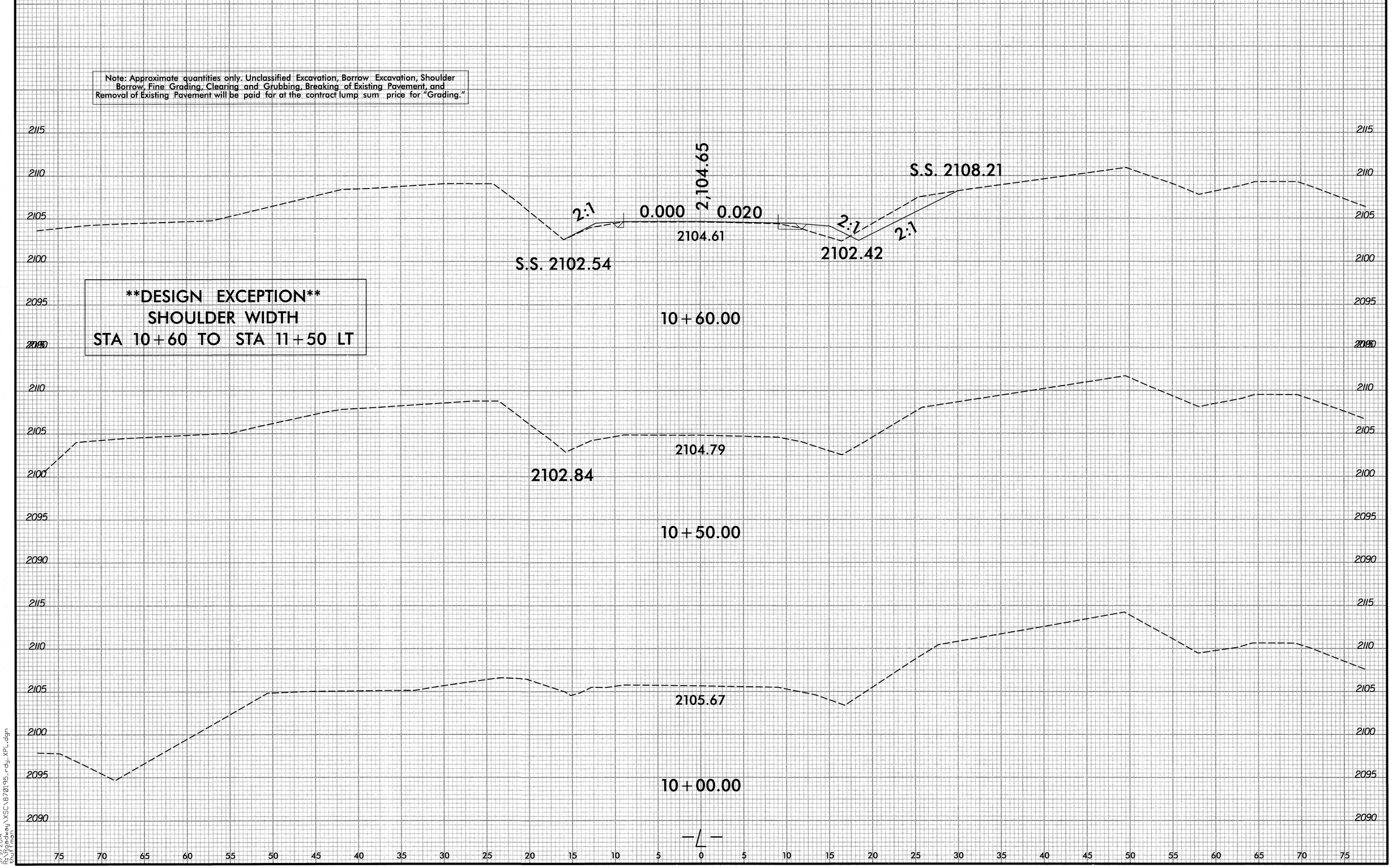

DESIGN EXCEPTION
SHOULDER WIDTH
STA 10+60 TO STA 11+50 LT

8/23/99

5/9/2014
R:\Roadway\XSC\870195_rdy_XPL.dgn
bhuffman

0 2.5 5	PROJ. REFERENCE NO.	SHEET NO.
	17BP.14.R.12	X-2

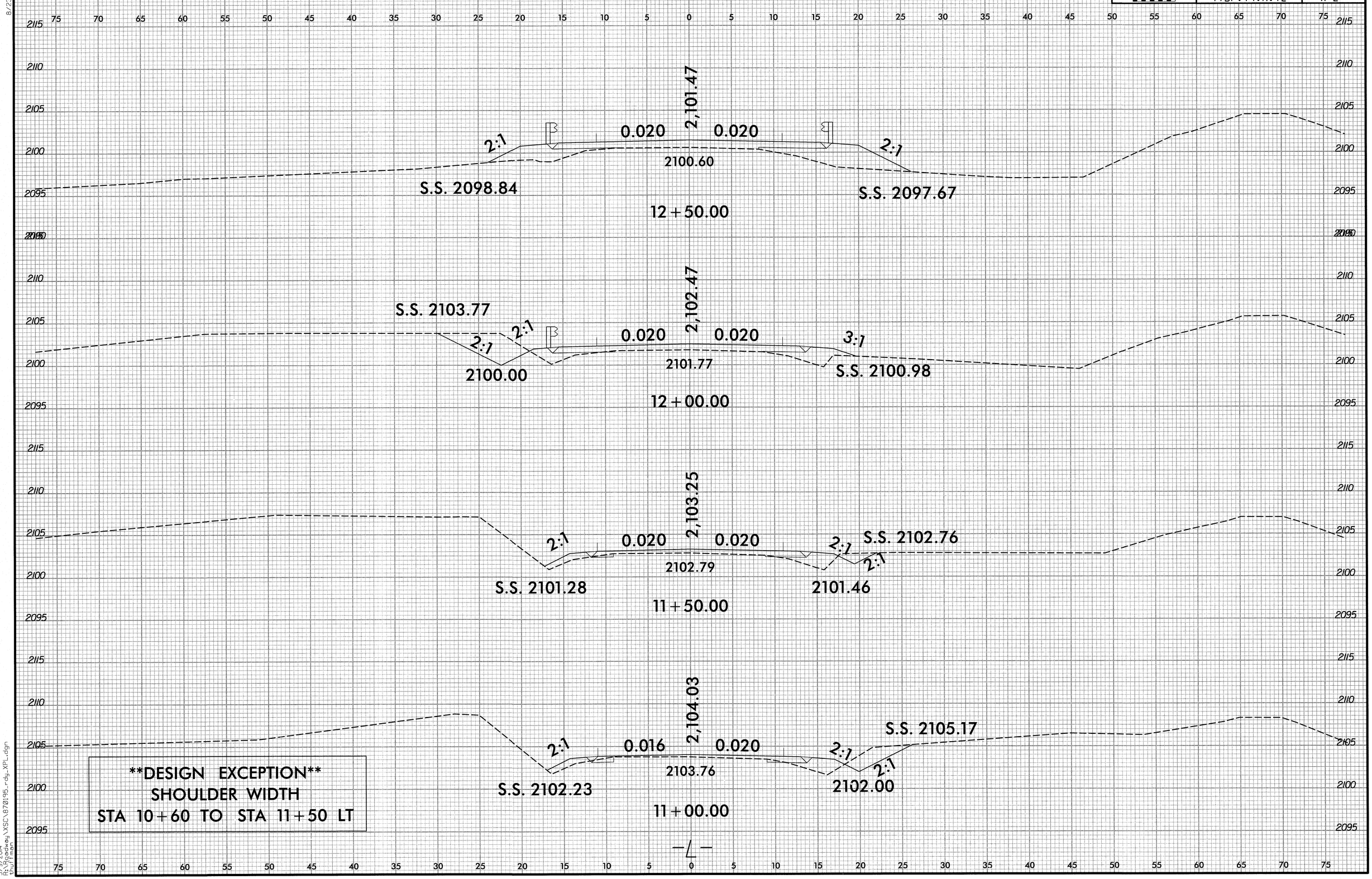

8/23/99

5/9/2014
R:\Roadway\XSC\870195-rdy_XPL.dgn
thuffman

8/23/99

0 2.5 5	PROJ. REFERENCE NO.	SHEET NO.
	17BP.14.R.12	X-3

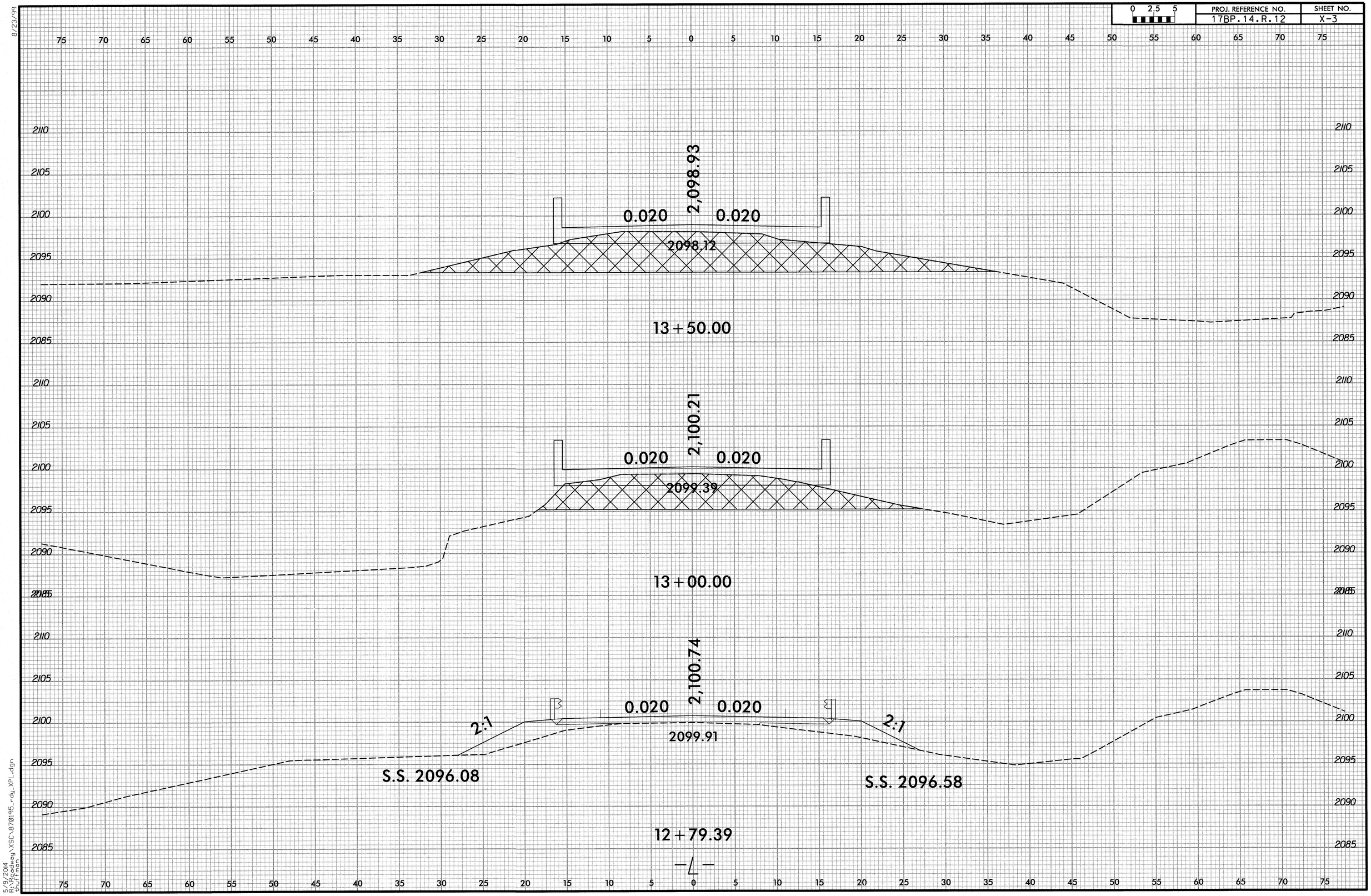

5/9/2014
R:\Roadway\XSC\870195_rdy_XPL.dgn
thuffman

8/23/99

0 2.5 5	PROJ. REFERENCE NO.	SHEET NO.
	17BP.14.R.12	X-4

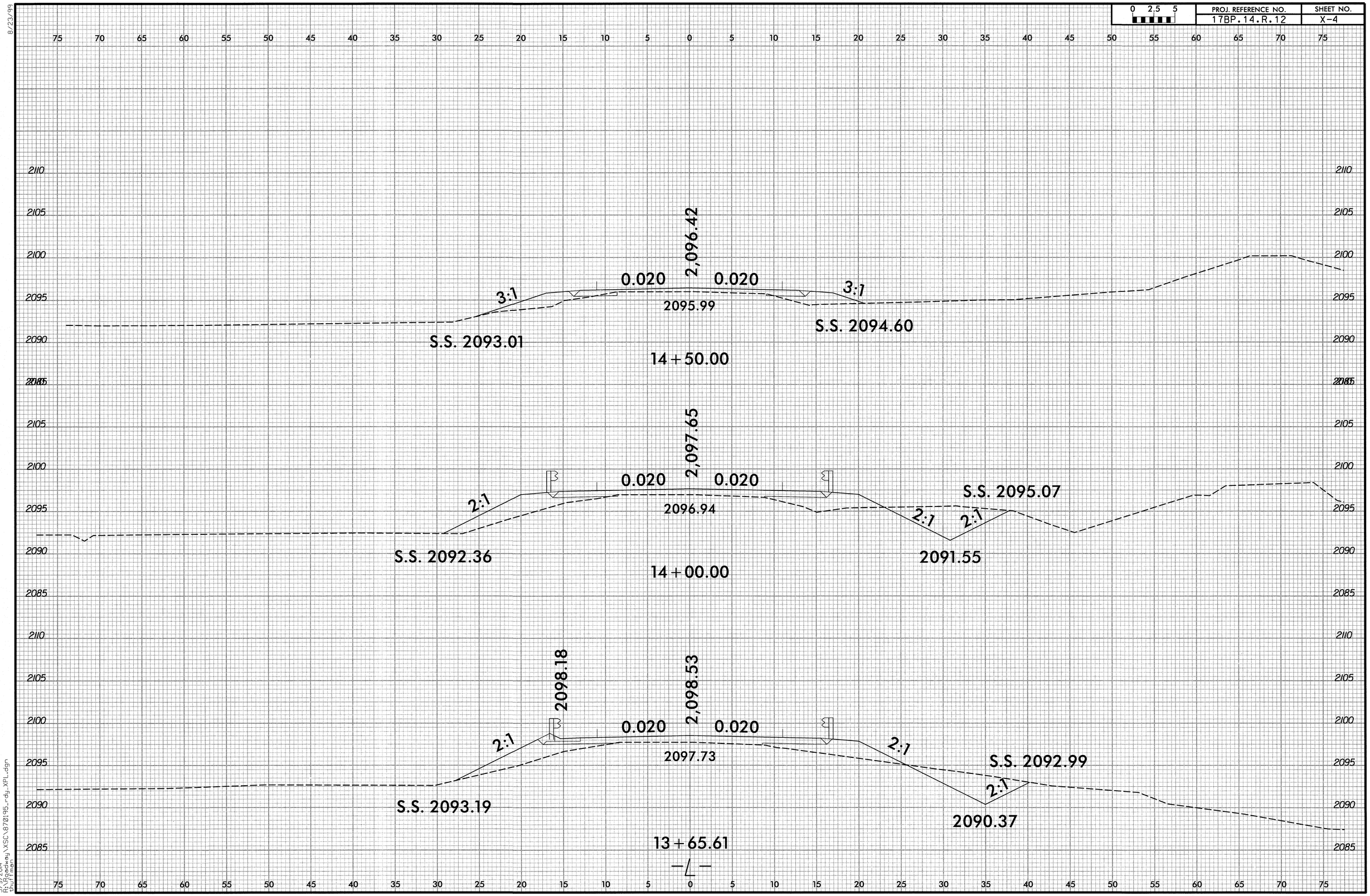

5/9/2014
R:\Roadway\XSC\870195_rdy_XPL.dgn
bhuffman

8/23/99

0 2.5 5	PROJ. REFERENCE NO.	SHEET NO.
	17BP.14.R.12	X-5

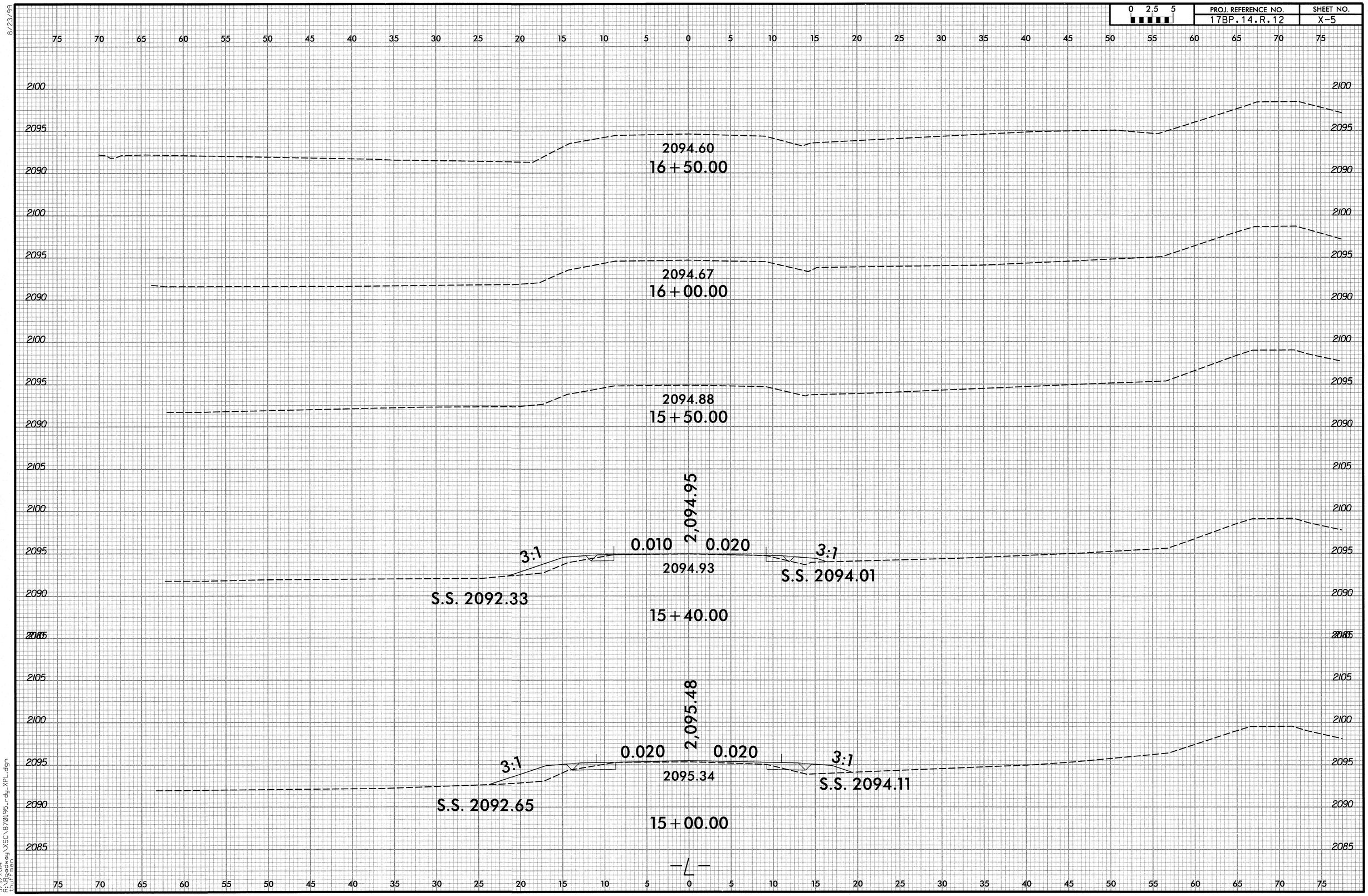

5/9/2014
R:\Roadway\XSC\870195_rdy_XPL.dgn
thurtman

PROJECT: 17BP.14.R.12

CONTRACT: DN00145

STATE	STATE PROJECT REFERENCE NO.	SHEET NO.	TOTAL SHEETS
N.C.	17BP.14.R.12	1	

STATE PROJ. NO.	F.A. PROJ. NO.	DESCRIPTION
17BP.14.R.12		PE
17BP.14.R.12		ROW & UTIL
17BP.14.R.12		CONST.

STATE OF NORTH CAROLINA

DIVISION OF HIGHWAYS

TRANSYLVANIA COUNTY

LOCATION: BRIDGE NO. 195 ON SR 1504 (OLD US 64) OVER LYDAY CREEK

TYPE OF WORK: PAVING, GRADING, GUARDRAIL, DRAINAGE AND STRUCTURE

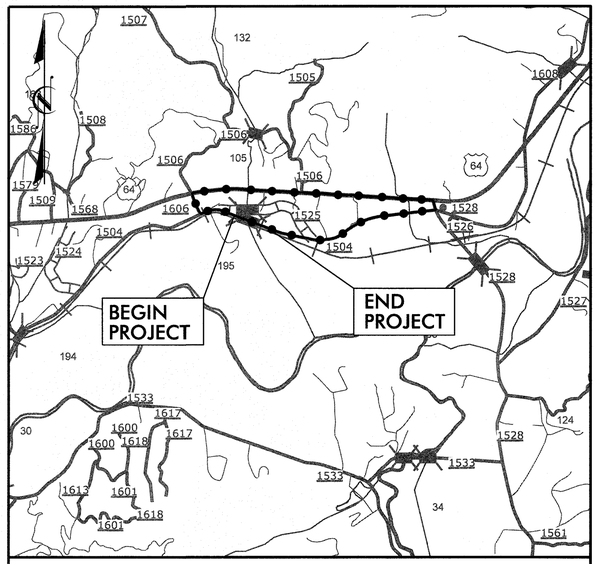

VICINITY MAP

DETOUR

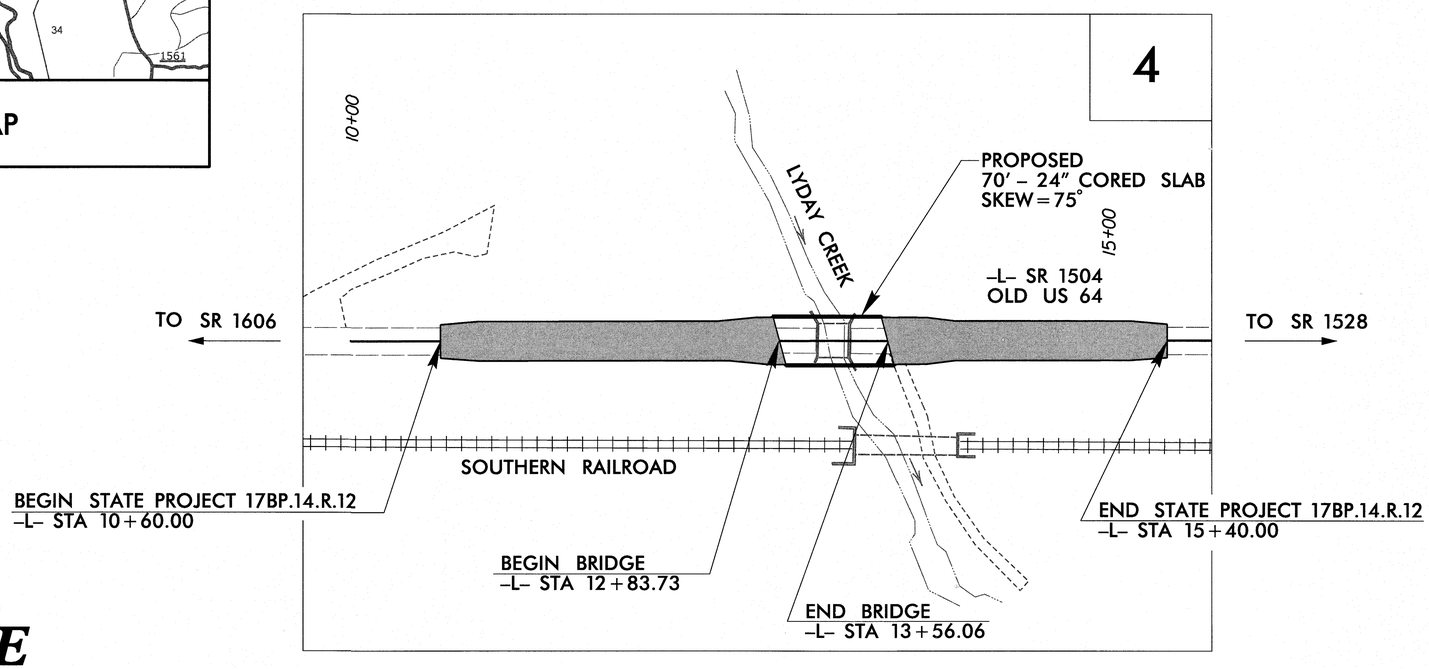

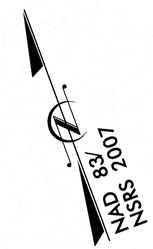

STRUCTURE

STATE OF NORTH CAROLINA DEPARTMENT OF TRANSPORTATION

DESIGN DATA

ADT 2013 = 2,970
ADT 2033 = 6,090
DHV = N/A %
D = N/A %
T = 7 % *
V = 60 MPH
* TTST = N/A DUAL 7%
FUNC CLASS =
MAJOR COLLECTOR
SUBREGIONAL TIER

PROJECT LENGTH

LENGTH ROADWAY OF PROJECT 17BP.14.R.12 = 0.077 mi.
LENGTH STRUCTURE OF PROJECT 17BP.14.R.12 = 0.014 mi.
TOTAL LENGTH OF STATE PROJECT 17BP.14.R.12 = 0.091mi.

Prepared for NCDOT In the Office of:

moffatt & nichol
1616 EAST MILLBROOK ROAD, SUITE 160
RALEIGH, NORTH CAROLINA 27609
(919) 781-4626 VOICE (919) 781-4869 FAX

2012 STANDARD SPECIFICATIONS

LETTING DATE :
JUNE 10, 2014

TIM REID, P.E.
PROJECT ENGINEER

MIKELE WINTERS, P.E.
PROJECT DESIGN ENGINEER

STRUCTURES MANAGEMENT UNIT
1000 BIRCH RIDGE DR.
RALEIGH, N.C. 27610

STATE OF NORTH CAROLINA DEPARTMENT OF TRANSPORTATION

5/9/2014
R:\Structures\870195_str_tsh.dgn
thuffman

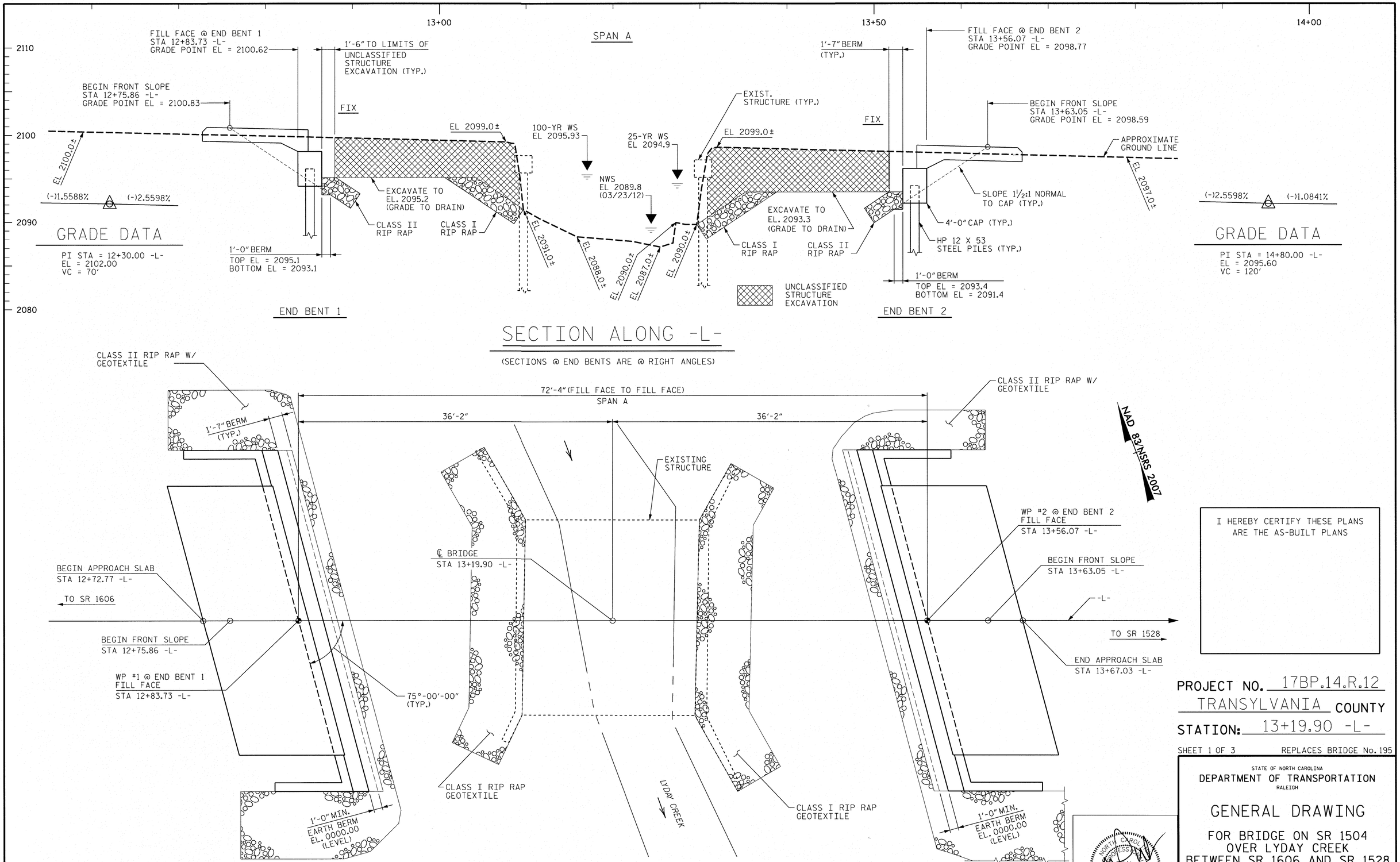

I HEREBY CERTIFY THESE PLANS ARE THE AS-BUILT PLANS

PROJECT NO. 17BP.14.R.12

TRANSYLVANIA COUNTY

STATION: 13+19.90 -L-

SHEET 1 OF 3 REPLACES BRIDGE No. 195

STATE OF NORTH CAROLINA
DEPARTMENT OF TRANSPORTATION
RALEIGH

GENERAL DRAWING

FOR BRIDGE ON SR 1504
OVER LYDAY CREEK
BETWEEN SR 1606 AND SR 1528

REVISIONS						SHEET NO.
NO.	BY:	DATE:	NO.	BY:	DATE:	S-1
1			3			TOTAL SHEETS
2			4			14

DRAWN BY : C. POWELL DATE : 12/2012
CHECKED BY : M. WINTERS DATE : 04/2013
DESIGN ENGINEER OF RECORD : M. WINTERS DATE :

moffatt & nichol
1616 EAST MILLBROOK ROAD, SUITE 160
RALEIGH, NORTH CAROLINA 27609
(919) 781-4626 VOICE (919) 781-4869 FAX

NORTH CAROLINA PROFESSIONAL SEAL 026433 ENGINEER MICHELLE WINTERS
5/9/2014

FOUNDATION NOTES:

FOR PILES SEE SECTION 450 OF THE STANDARD SPECIFICATIONS.

PILES AT END BENT NO. 1 ARE DESIGNED FOR A FACTORED RESISTANCE OF 81 TONS PER PILE.

DRIVE PILES AT END BENT NO. 1 TO A REQUIRED DRIVING RESISTANCE OF 135 TONS PER PILE.

STEEL H-PILE POINTS ARE REQUIRED FOR STEEL H-PILES AT END BENT NO. 1. FOR STEEL POINTS, SEE SECTION 450 OF THE STANDARD SPECIFICATIONS.

PILES AT END BENT NO. 2 ARE DESGINED FOR A FACTORED RESISTANCE OF 81 TONS PER PILE.

DRIVE PILES AT END BENT NO. 2 TO A REQUIRED DRIVING RESISTANCE OF 135 TONS PER PILE.

STEEL H-PILE POINTS ARE REQUIRED FOR STEEL H-PILES AT END BENT NO. 2. FOR STEEL POINTS, SEE SECTION 450 OF THE STANDARD SPECIFICATIONS.

IT HAS BEEN ESTIMATED THAT A HAMMER WITH AN EQUIVALENT RATED ENERGY IN THE RANGE OF 40,000 FT-LBS PER BLOW WILL BE REQUIRED TO DRIVE PILES AT END BENTS NO.1 AND 2. THIS ESTIMATED ENERGY RANGE DOES NOT RELEASE THE CONTRACTOR FROM PROVIDING DRIVING EQUIPMENT IN ACCORDANCE WITH SUBARTICLE 450-3(D)(2) OF THE STANDARD SPECIFICATIONS.

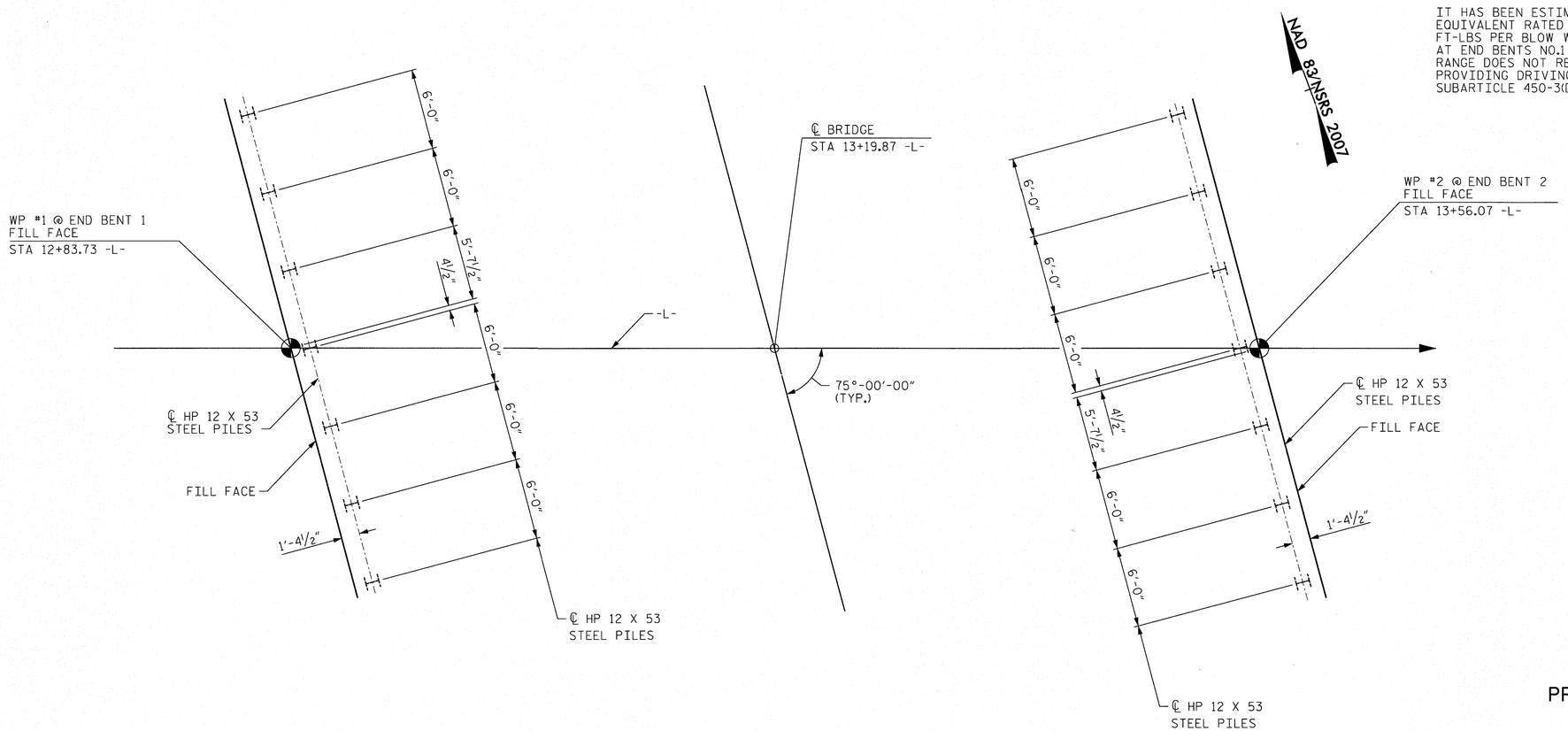

END BENT 1

END BENT 2

FOUNDATION LAYOUT

(DIMENSIONS LOCATING PILES ARE SHOWN TO PILE CENTERLINE)

PROJECT NO. 17BP.14.R.12

TRANSYLVANIA COUNTY

STATION: 13+19.90 -L-

SHEET 2 OF 3

STATE OF NORTH CAROLINA
DEPARTMENT OF TRANSPORTATION
RALEIGH

GENERAL DRAWING

FOR BRIDGE ON SR 1504
OVER LYDAY CREEK
BETWEEN SR 1606 AND SR 1528

REVISIONS						SHEET NO.
NO.	BY:	DATE:	NO.	BY:	DATE:	S-2
1			3			TOTAL SHEETS
2			4			14

moffatt & nichol
1616 EAST MILLBROOK ROAD, SUITE 160
RALEIGH, NORTH CAROLINA 27609
(919) 781-4626 VOICE (919) 781-4869 FAX

NORTH CAROLINA PROFESSIONAL SEAL 026433 ENGINEER MIKELE E. WINTERS
5/9/2014

DRAWN BY : C. POWELL DATE : 12/2012
CHECKED BY : M. WINTERS DATE : 04/2013
DESIGN ENGINEER OF RECORD : M. WINTERS DATE :

TBM BM-1 RR SPIKE IN TREE LOCATED AT STA 7+13.02 -L-; 26.15' RT, EL. 2111.72

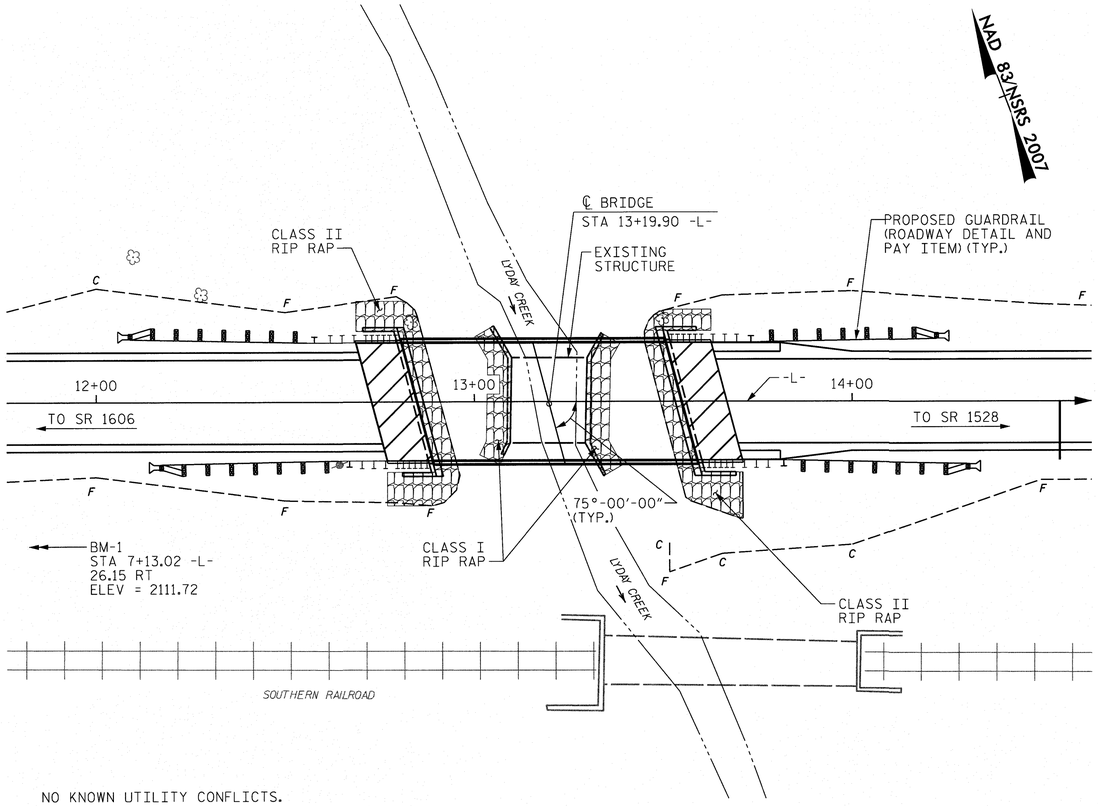

NO KNOWN UTILITY CONFLICTS.

LOCATION SKETCH

NOTES:

ASSUMED LIVE LOAD = HL-93 OR ALTERNATE LOADING.

THIS BRIDGE HAS BEEN DESIGNED IN ACCORDANCE WITH THE REQUIREMENTS OF THE AASHTO LRFD BRIDGE DESIGN SPECIFICATIONS.

THIS BRIDGE IS LOCATED IN SEISMIC ZONE 1.

FOR OTHER DESIGN DATA AND GENERAL NOTES, SEE SHEET SN.

FOR EROSION CONTROL MEASURES SEE EROSION CONTROL PLANS.

THE EXISTING STRUCTURE CONSISTING OF ONE SPAN, 1 @ 21'-8" WITH CONCRETE RAILS AND A CLEAR ROADWAY WIDTH OF 18'-4" AND A CONCRETE SLAB DECK ON VERTICAL CONCRETE ABUTMENTS AT THE END BENTS LOCATED AT THE SITE OF THE PROPOSED STRUCTURE SHALL BE REMOVED. THE EXISTING BRIDGE IS PRESENTLY POSTED BELOW THE LEGAL LOAD LIMIT. SHOULD THE STRUCTURAL INTEGRITY OF THE BRIDGE FURTHER DETERIORATE, THIS LOAD LIMITATION MAY BE REDUCED AS FOUND NECESSARY DURING THE LIFE OF THE PROJECT.

REMOVAL OF THE EXISTING BRIDGE SHALL BE PERFORMED SO AS NOT TO ALLOW DEBRIS TO FALL INTO THE WATER. THE CONTRACTOR SHALL REMOVE THE BRIDGE AND SUBMIT PLANS FOR DEMOLITION IN ACCORDANCE WITH ARTICLE 402-2 OF THE STANDARD SPECIFICATIONS.

THE MATERIAL SHOWN IN THE CROSS-HATCHED AREA ON SHEET S-1 SHALL BE EXCAVATED FOR A DISTANCE OF 25 FT. EACH SIDE OF CENTERLINE ROADWAY AS DIRECTED BY THE ENGINEER. THIS WORK WILL BE PAID FOR AT THE CONTRACT LUMP SUM PRICE FOR UNCLASSIFIED STRUCTURE EXCAVATION. SEE SECTION 412 OF THE STANDARD SPECIFICATIONS.

THE SUBSTRUCTURE OF THE EXISTING BRIDGE INDICATED ON THE PLANS IS FROM THE BEST INFORMATION AVAILABLE. SINCE THIS INFORMATION IS SHOWN FOR THE CONVENIENCE OF THE CONTRACTOR, THE CONTRACTOR SHALL HAVE NO CLAIM WHATSOEVER AGAINST THE DEPARTMENT OF TRANSPORTATION FOR ANY DELAYS OR ADDITIONAL COST INCURRED BASED ON THE DIFFERENCES BETWEEN THE EXISTING BRIDGE SUBSTRUCTURE SHOWN ON THE PLANS AND THE ACTUAL CONDITIONS AT THE PROJECT SITE.

THIS STRUCTURE HAS BEEN DESIGNED IN ACCORDANCE WITH HEC 18 "EVALUATING SCOUR AT BRIDGES", APRIL, 2012.

THE CONTRACTOR SHALL PROVIDE INDEPENDENT ASSURANCE SAMPLES OF REINFORCING STEEL AS FOLLOWS: FOR PROJECTS REQUIRING UP TO 400 TONS OF REINFORCING STEEL, ONE 30 INCH SAMPLE OF EACH SIZE BAR USED AND FOR PROJECTS REQUIRING OVER 400 TONS OF REINFORCING STEEL, TWO 30 INCH SAMPLES OF EACH SIZE BAR USED. THE BARS FROM WHICH THE SAMPLES ARE TAKEN MUST THEN BE SPLICED WITH THE REPLACEMENT BARS OF THE SIZE AND LENGTH OF THE SAMPLE, PLUS A MINIMUM LAP SPLICE OF THIRTY BAR DIAMETERS. PAYMENT FOR THE SAMPLES OF REINFORCING STEEL SHALL BE CONSIDERED INCIDENTAL TO VARIOUS PAY ITEMS.

IN AS MUCH AS THE PAINT SYSTEM ON THE EXISTING STRUCTURAL STEEL CONTAINS LEAD, THE CONTRACTOR'S ATTENTION IS DIRECTED TO ARTICLE 107-1 OF THE STANDARD SPECIFICATIONS. ANY COSTS RESULTING FROM COMPLIANCE WITH APPLICABLE STATE OR FEDERAL REGULATIONS PERTAINING TO HANDLING OF MATERIALS CONTAINING LEAD BASED PAINT SHALL BE INCLUDED IN THE BID PRICE FOR "REMOVAL OF EXISTING STRUCTURE AT STATION 13+19.90 -L-".

FOR SUBMITTAL OF WORKING DRAWINGS, SEE SPECIAL PROVISIONS.

FOR FALSEWORK AND FORMWORK, SEE SPECIAL PROVISIONS.

FOR CRANE SAFETY, SEE SPECIAL PROVISIONS.

FOR GROUT FOR STRUCTURES, SEE SPECIAL PROVISIONS.

ASPHALT WEARING SURFACE IS INCLUDED IN ROADWAY QUANTITY ON ROADWAY PLANS.

HYDRAULIC DATA

DESIGN DISCHARGE	= 780 CFS
FREQUENCY OF DESIGN DISCHARGE	= 25-YR
DESIGN HIGH WATER ELEVATION	= 2094.9
DRAINAGE AREA	= 2.5 SQ MI
BASE DISCHARGE (Q100)	= 1400 CFS
BASE HIGH WATER ELEVATION	= 2095.93

OVERTOPPING FLOOD DATA

OVERTOPPING DISCHARGE	= 800 CFS
FREQUENCY OF OVERTOPPING FLOOD	= 25-YR+/-
OVERTOPPING ELEVATION	= 2094.9
OVERTOPPING OCCURS AT STA 17+42.6 -L-	

TOTAL BILL OF MATERIAL

	REMOVAL OF EXISTING STRUCTURE	UNCLASSIFIED STRUCTURE EXCAVATION	CLASS A CONCRETE	BRIDGE APPROACH SLABS	REINFORCING STEEL	HP 12 X 53 STEEL PILES		STEEL PILE POINTS	VERTICAL CONCRETE BARRIER RAIL	RIP RAP CLASS I	GEOTEXTILE FOR DRAINAGE (W/ CL I)	RIP RAP CLASS II	GEOTEXTILE FOR DRAINAGE (W/ CL II)	ELASTOMERIC BEARINGS	3'-0" x 2'-0" PRESTRESSED CONCRETE CORED SLABS	
	LUMP SUM	LUMP SUM	CU.YDS.	LUMP SUM	LBS.	NO.	LIN.FT.	NO.	LIN.FT.	TONS	SQ. YD.	TONS	SQ. YD.	LUMP SUM	NO.	LIN.FT.
SUPERSTRUCTURE				LUMP SUM					140.26					LUMP SUM	11	770
END BENT NO.1		LUMP SUM	22.2		2714	7	160	7		30	37	47	59			
END BENT NO.2		LUMP SUM	22.2		2714	7	210	7		30	38	44	55			
TOTAL	LUMP SUM	LUMP SUM	44.4	LUMP SUM	5428	14	370	14	140.26	60	75	91	114	LUMP SUM	11	770

PROJECT NO. 17BP.14.R.12
TRANSYLVANIA COUNTY
STATION: 13+19.90 -L-

SHEET 3 OF 3

STATE OF NORTH CAROLINA
DEPARTMENT OF TRANSPORTATION
RALEIGH

GENERAL DRAWING

FOR BRIDGE ON SR 1504
OVER LYDAY CREEK
BETWEEN SR 1606 AND SR 1528

DRAWN BY : C. POWELL DATE : 12/2012
CHECKED BY : M. WINTERS DATE : 04/2013
DESIGN ENGINEER OF RECORD : M. WINTERS DATE :

moffatt & nichol
1616 EAST MILLBROOK ROAD, SUITE 160
RALEIGH, NORTH CAROLINA 27609
(919) 781-4626 VOICE (919) 781-4869 FAX

NORTH CAROLINA PROFESSIONAL SEAL 026433 ENGINEER MIKELE E. WINTERS
5/9/2014

REVISIONS						SHEET NO.
NO.	BY:	DATE:	NO.	BY:	DATE:	S-3
1			3			TOTAL SHEETS
2			4			14

LOAD AND RESISTANCE FACTOR RATING (LRFD) SUMMARY FOR PRESTRESSED CONCRETE CORED SLAB UNITS

LEVEL		VEHICLE	WEIGHT (W) (TONS)	CONTROLLING LOAD RATING	MINIMUM RATING FACTORS (RF)	TONS = W X RF	STRENGTH I LIMIT STATE											SERVICE III LIMIT STATE						COMMENT NUMBER
								MOMENT					SHEAR						MOMENT					
							LIVELOAD FACTORS	DISTRIBUTION FACTORS (DF)	RATING FACTOR	SPAN	GIRDER LOCATION	DISTANCE FROM LEFT END OF SPAN (ft)	DISTRIBUTION FACTORS (DF)	RATING FACTOR	SPAN	GIRDER LOCATION	DISTANCE FROM LEFT END OF SPAN (ft)	LIVELOAD FACTORS	DISTRIBUTION FACTORS (DF)	RATING FACTOR	SPAN	GIRDER LOCATION	DISTANCE FROM LEFT END OF SPAN (ft)	
DESIGN LOAD RATING		HL-93(Inv)	N/A	**1**	1.014	--	1.75	0.269	1.04	70'	EL	34.482	0.608	1.1	70'	EL	3.448	0.80	0.269	**1.01**	70'	EL	**34.482**	
		HL-93(Opr)	N/A	--	1.355	--	1.35	0.269	1.35	70'	EL	34.482	0.608	1.43	70'	EL	3.448	N/A	--	--	--	--	--	
		HS-20(Inv)	36.000	**2**	1.315	47.356	1.75	0.269	1.36	70'	EL	34.482	0.608	1.38	70'	EL	3.448	0.80	0.269	**1.32**	70'	EL	**34.482**	
		HS-20(Opr)	36.000	--	1.757	63.236	1.35	0.269	1.76	70'	EL	34.482	0.608	1.79	70'	EL	3.448	N/A	--	--	--	--	--	
LEGAL LOAD RATING	SV	SNSH	13.500	--	2.938	39.656	1.4	0.269	3.78	70'	EL	34.482	0.608	4.12	70'	EL	3.448	0.80	0.269	2.94	70'	EL	34.482	
		SNGARBS2	20.000	--	2.203	44.052	1.4	0.269	2.84	70'	EL	34.482	0.608	2.93	70'	EL	3.448	0.80	0.269	2.20	70'	EL	34.482	
		SNAGRIS2	22.000	--	2.092	46.016	1.4	0.269	2.69	70'	EL	34.482	0.608	2.72	70'	EL	3.448	0.80	0.269	2.09	70'	EL	34.482	
		SNCOTTS3	27.250	--	1.462	39.844	1.4	0.269	1.88	70'	EL	34.482	0.608	2.06	70'	EL	3.448	0.80	0.269	1.46	70'	EL	34.482	
		SNAGGRS4	34.925	--	1.227	42.856	1.4	0.269	1.58	70'	EL	34.482	0.608	1.71	70'	EL	3.448	0.80	0.269	1.23	70'	EL	34.482	
		SNS5A	35.550	--	1.2	42.646	1.4	0.269	1.54	70'	EL	34.482	0.608	1.73	70'	EL	3.448	0.80	0.269	1.20	70'	EL	34.482	
		SNS6A	39.950	--	1.103	44.058	1.4	0.269	1.42	70'	EL	34.482	0.608	1.58	70'	EL	3.448	0.80	0.269	1.10	70'	EL	34.482	
		SNS7B	42.000	--	1.05	44.113	1.4	0.269	1.35	70'	EL	34.482	0.608	1.55	70'	EL	3.448	0.80	0.269	1.05	70'	EL	34.482	
	TTST	TNAGRIT3	33.000	--	1.345	44.401	1.4	0.269	1.73	70'	EL	34.482	0.608	1.88	70'	EL	3.448	0.80	0.269	1.35	70'	EL	34.482	
		TNT4A	33.075	--	1.352	44.717	1.4	0.269	1.74	70'	EL	34.482	0.608	1.83	70'	EL	3.448	0.80	0.269	1.35	70'	EL	34.482	
		TNT6A	41.600	--	1.108	46.073	1.4	0.269	1.43	70'	EL	34.482	0.608	1.65	70'	EL	3.448	0.80	0.269	1.11	70'	EL	34.482	
		TNT7A	42.000	--	1.114	46.794	1.4	0.269	1.43	70'	EL	34.482	0.608	1.62	70'	EL	3.448	0.80	0.269	1.11	70'	EL	34.482	
		TNT7B	42.000	--	1.155	48.526	1.4	0.269	1.49	70'	EL	34.482	0.608	1.51	70'	EL	3.448	0.80	0.269	1.16	70'	EL	34.482	
		TNAGRIT4	43.000	--	1.097	47.174	1.4	0.269	1.41	70'	EL	34.482	0.608	1.46	70'	EL	3.448	0.80	0.269	1.10	70'	EL	34.482	
		TNAGT5A	45.000	--	1.033	46.505	1.4	0.269	1.33	70'	EL	34.482	0.608	1.45	70'	EL	3.448	0.80	0.269	1.03	70'	EL	34.482	
		TNAGT5B	45.000	**3**	1.02	45.905	1.4	0.269	1.31	70'	EL	34.482	0.608	1.39	70'	EL	3.448	0.80	0.269	**1.02**	70'	EL	**34.482**	

LOAD FACTORS:

DESIGN LOAD RATING FACTORS	LIMIT STATE	γ_{DC}	γ_{DW}
	STRENGTH I	1.25	1.50
	SERVICE III	1.00	1.00

NOTES:

MINIMUM RATING FACTORS ARE BASED ON THE STRENGTH I AND SERVICE III LIMIT STATES.

ALLOWABLE STRESSES FOR SERVICE III LIMIT STATE ARE AS REQUIRED FOR DESIGN.

COMMENTS:

1.
2.
3.
4.

CONTROLLING LOAD RATING

(1) DESIGN LOAD RATING (HL-93)
(2) DESIGN LOAD RATING (HS-20)
(3) LEGAL LOAD RATING **
** SEE CHART FOR VEHICLE TYPE

GIRDER LOCATION

I - INTERIOR GIRDER
EL - EXTERIOR LEFT GIRDER
ER - EXTERIOR RIGHT GIRDER

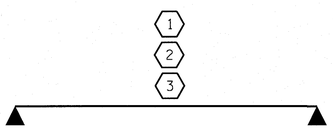

LRFR SUMMARY

FOR SPAN 'A'

PROJECT NO. 17BP.14.R.12
TRANSYLVANIA COUNTY
STATION: 13+19.90 -L-

STATE OF NORTH CAROLINA
DEPARTMENT OF TRANSPORTATION
RALEIGH

STANDARD
LRFR SUMMARY FOR
70' CORED SLAB UNIT
75° SKEW
(NON-INTERSTATE TRAFFIC)

REVISIONS								SHEET NO.
NO.	BY:	DATE:	NO.	BY:	DATE:			S-4
1			3					TOTAL SHEETS
2			4					14

moffatt & nichol
1616 EAST MILLBROOK ROAD, SUITE 160
RALEIGH, NORTH CAROLINA 27609
(919) 781-4626 VOICE (919) 781-4869 FAX

NORTH CAROLINA PROFESSIONAL SEAL 026433 ENGINEER MINGLE E. WINTERS
5/9/2014

ASSEMBLED BY : C. POWELL DATE : 12/2012
CHECKED BY : M. WINTERS DATE : 04/2013
DESIGN ENGINEER OF RECORD : M. WINTERS DATE :
DRAWN BY : CVC 6/10
CHECKED BY : DNS 6/10

5/9/2014
P:\7658-08\CADD\870195\Structures\870195_LRFR.dgn
thuffman

STD. NO. 24LRFR1_75&105S_70L

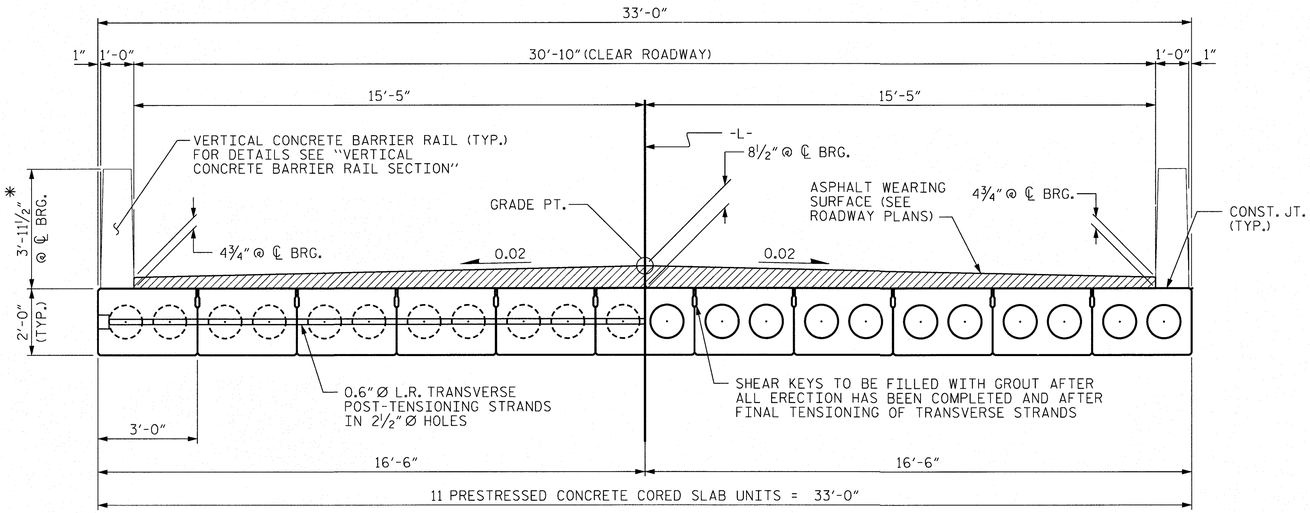

HALF SECTION
AT INTERMEDIATE DIAPHRAGMS

TYPICAL SECTION

HALF SECTION
THROUGH VOIDS

* - THE MAXIMUM BARRIER RAIL HEIGHT AND ASPHALT THICKNESS IS SHOWN. THE HEIGHT OF THE BARRIER RAIL AND ASPHALT THICKNESS VARIES WHILE THE TOP OF THE BARRIER RAIL FOLLOWS THE PROFILE OF THE GUTTERLINE. FOR RAIL HEIGHT DETAILS AND ASPHALT THICKNESS, SEE THE "VERTICAL CONCRETE BARRIER RAIL SECTION" DETAIL.

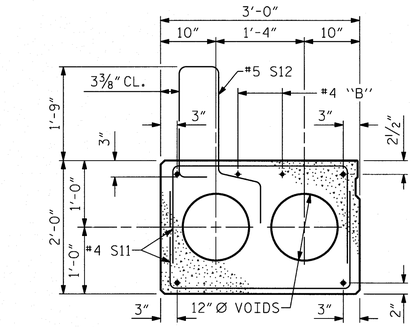

EXTERIOR SLAB SECTION

(FOR PRESTRESSED STRAND LAYOUT, SEE INTERIOR SLAB SECTION.)

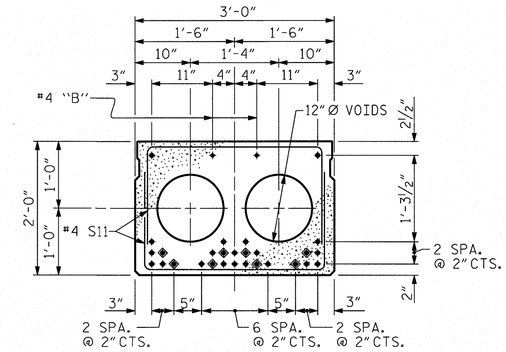

INTERIOR SLAB SECTION (70' UNIT)

(28 STRANDS REQUIRED)

0.6'' Ø LOW RELAXATION STRAND LAYOUT

◈ BOND SHALL BE BROKEN ON THESE STRANDS FOR A DISTANCE OF 12'-0" FROM END OF CORED SLAB UNIT. SEE STANDARD SPECIFICATIONS, ARTICLE 1078-7.

DEBONDING LEGEND

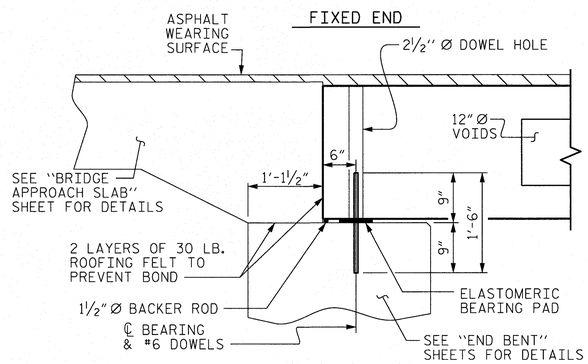

SECTION AT END BENT

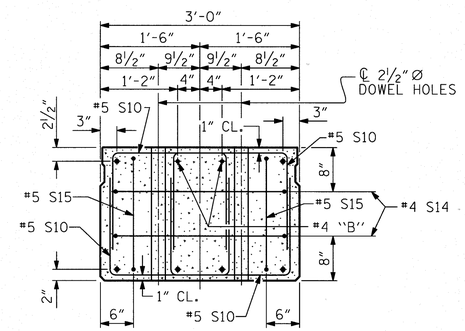

END ELEVATION

SHOWING PLACEMENT OF DOUBLE STIRRUPS AND LOCATION OF DOWEL HOLES.
(STRAND LAYOUT NOT SHOWN.)
INTERIOR SLAB UNIT SHOWN-EXTERIOR SLAB UNIT SIMILAR EXCEPT SHEAR KEY LOCATION.

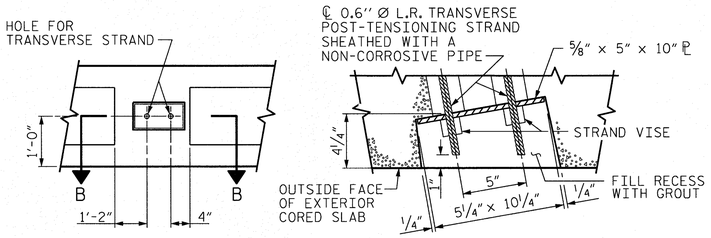

ELEVATION VIEW

SECTION B-B

GROUTED RECESS AT END OF POST-TENSIONED STRAND OF CORED SLABS

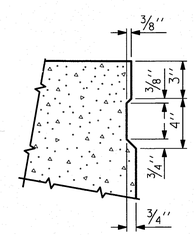

SHEAR KEY DETAIL

NOTE: OMIT SHEAR KEY ON OUTSIDE FACE OF EXTERIOR CORED SLABS.

PROJECT NO. 17BP.14.R.12
TRANSYLVANIA COUNTY
STATION: 13+19.90 -L-

SHEET 1 OF 3

STATE OF NORTH CAROLINA
DEPARTMENT OF TRANSPORTATION
RALEIGH
STANDARD

3'-0'' X 2'-0'' PRESTRESSED CONCRETE CORED SLAB UNIT

ASSEMBLED BY : C. POWELL	DATE : 12/2012
CHECKED BY : M. WINTERS	DATE : 04/2013
DESIGN ENGINEER OF RECORD : M. WINTERS	DATE :
DRAWN BY : MAA 6/10	REV. 12/11 MAA/AAC
CHECKED BY : MKT 7/10	

moffatt & nichol
1616 EAST MILLBROOK ROAD, SUITE 160
RALEIGH, NORTH CAROLINA 27609
(919) 781-4626 VOICE (919) 781-4869 FAX

NORTH CAROLINA PROFESSIONAL SEAL 026433 ENGINEER MICHELE E. WINTERS
5/9/2014

REVISIONS						SHEET NO.
NO.	BY:	DATE:	NO.	BY:	DATE:	S-5
1			3			TOTAL SHEETS
2			4			14

STD. NO. 24PCS4_33_75S

5/9/2014
P:\7658-08\CADD\870195\Structures\870195_24CSU_SECTION.dgn
thuffman

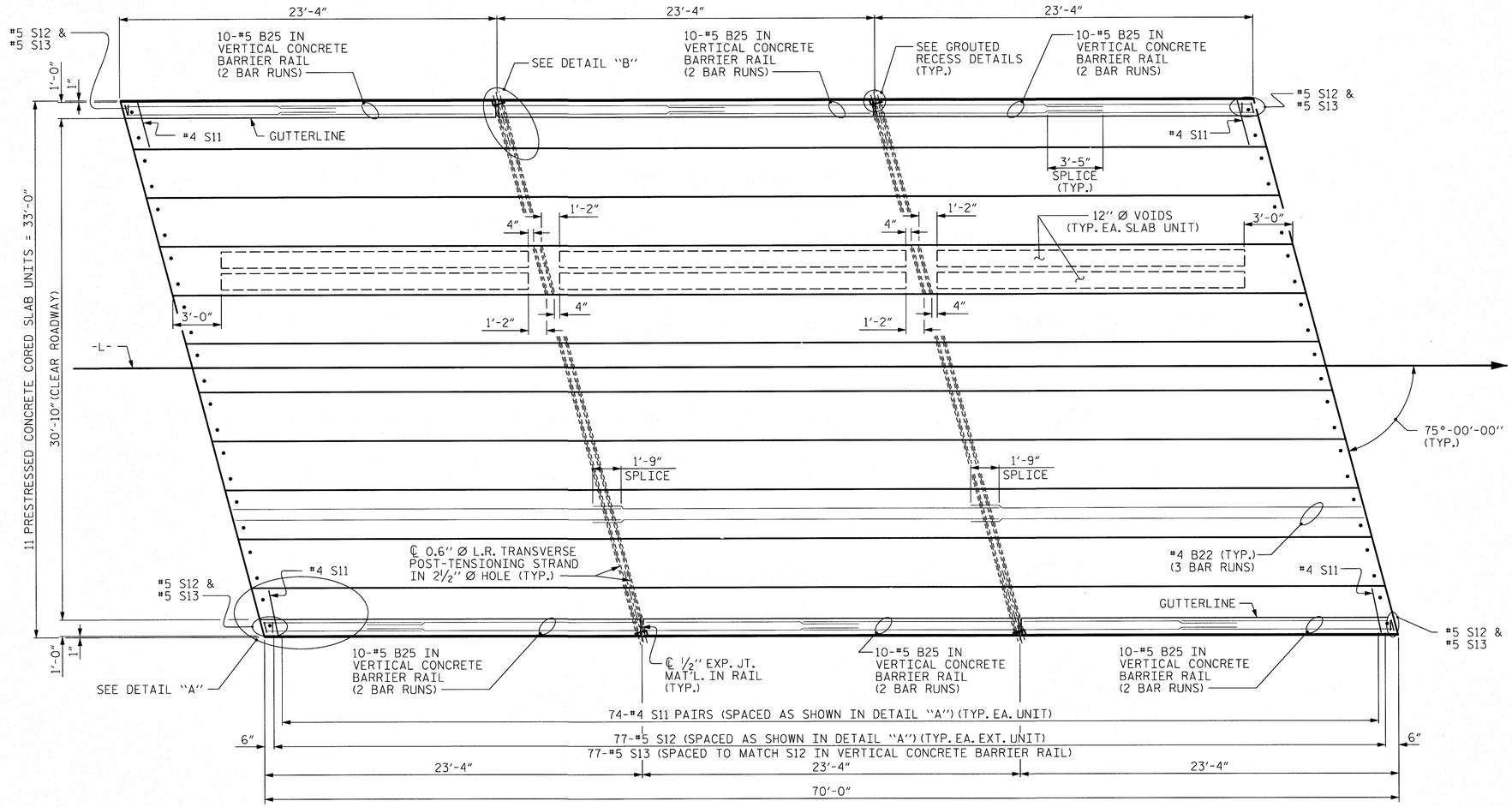

PLAN OF UNIT

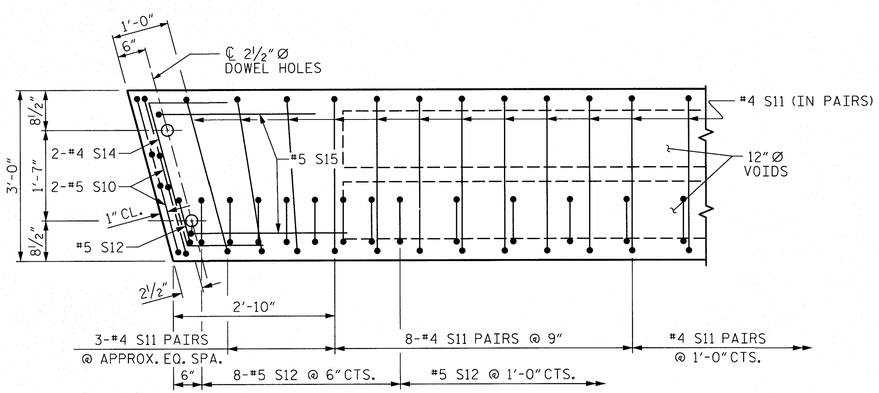

DETAIL "A"

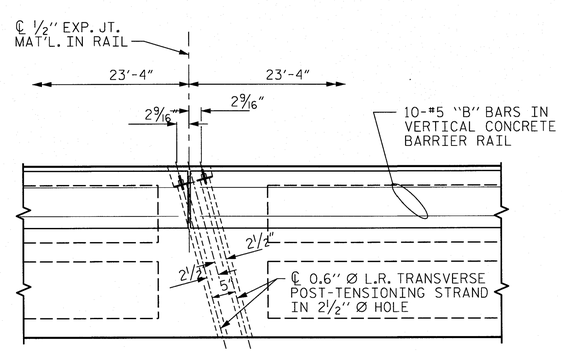

DETAIL "B"

#4 S11 BARS MAY BE SHIFTED AS NECESSARY TO MAINTAIN 1" CLEAR TO GROUTED RECESS AND 2½" Ø TRANSVERSE POST-TENSIONING STRAND HOLES

NOTE: EXTERIOR UNIT SHOWN - INTERIOR UNIT SIMILAR EXCEPT OMIT #5 S12 BARS.

ASSEMBLED BY : C. POWELL DATE : 12/2012
CHECKED BY : M. WINTERS DATE : 04/2013
DESIGN ENGINEER OF RECORD : M. WINTERS DATE :

DRAWN BY : MAA 6/10
CHECKED BY : MKT 7/10

REV. 12/5/11 MAA/AAC

5/9/2014
P:\7658-08\CADD\870195\Structures\870195_24CSU_PLAN.dgn
thuffman

moffatt & nichol
1616 EAST MILLBROOK ROAD, SUITE 160
RALEIGH, NORTH CAROLINA 27609
(919) 781-4626 VOICE (919) 781-4869 FAX

NORTH CAROLINA PROFESSIONAL SEAL 026433 ENGINEER MIKELE C. WINTERS
5/9/2014

PROJECT NO. 17BP.14.R.12
TRANSYLVANIA COUNTY
STATION: 13+19.90 -L-

SHEET 2 OF 3

STATE OF NORTH CAROLINA
DEPARTMENT OF TRANSPORTATION
RALEIGH

PLAN OF 70' UNIT 30'-10" CLEAR ROADWAY 75° SKEW

REVISIONS						
NO.	BY:	DATE:	NO.	BY:	DATE:	
1			3			
2			4			

SHEET NO. S-6
TOTAL SHEETS 14

STD. NO. 24PCS_33_75S_70L

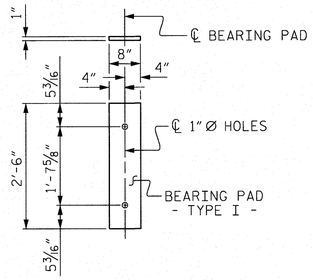

FIXED END
(TYPE I - 22 REQ'D)

ELASTOMERIC BEARING DETAILS

ELASTOMER IN ALL BEARINGS SHALL BE 60 DUROMETER HARDNESS.

GUTTERLINE ASPHALT THICKNESS & RAIL HEIGHT		
33' NORMAL CROWN	ASPHALT OVERLAY THICKNESS @ MID-SPAN	RAIL HEIGHT @ MID-SPAN
70' UNITS	1 1/4"	3'-8"

CORED SLABS REQUIRED			
	NUMBER	LENGTH	TOTAL LENGTH
70' UNIT			
EXTERIOR C.S.	2	70'-0"	140'-0"
INTERIOR C.S.	9	70'-0"	630'-0"
TOTAL	11	70'-0"	770'-0"

DEAD LOAD DEFLECTION AND CAMBER	
	3'-0" x 2'-0"
70' CORED SLAB UNIT	0.6" Ø L.R. STRAND
CAMBER (SLAB ALONE IN PLACE)	4 5/16" ↑
DEFLECTION DUE TO SUPERIMPOSED DEAD LOAD**	13/16" ↓
FINAL CAMBER	3 1/2" ↑

** INCLUDES FUTURE WEARING SURFACE

BAR TYPES

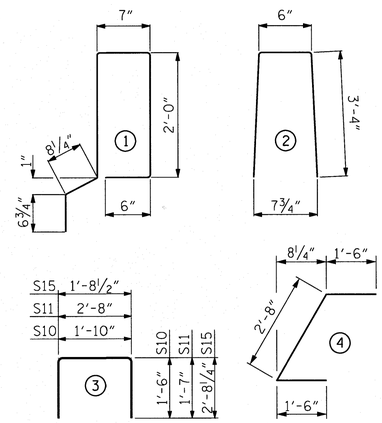

ALL BAR DIMENSIONS ARE OUT TO OUT

NOTES

ALL PRESTRESSING STRANDS SHALL BE 7-WIRE LOW RELAXATION GRADE 270 STRANDS AND SHALL CONFORM TO AASHTO M203 EXCEPT FOR SAMPLING REQUIREMENTS WHICH SHALL BE IN ACCORDANCE WITH THE STANDARD SPECIFICATIONS.

ALL REINFORCING STEEL CAST WITH THE CORED SLAB SECTIONS SHALL BE GRADE 60 AND SHALL BE INCLUDED IN THE UNIT PRICE BID FOR PRESTRESSED CONCRETE CORED SLABS.

RECESSES FOR TRANSVERSE STRANDS SHALL BE GROUTED AFTER THE TENSIONING OF THE STRANDS.

THE 2 1/2" Ø DOWEL HOLES AT FIXED ENDS OF SLAB SECTIONS SHALL BE FILLED WITH NON-SHRINK GROUT.

THE BACKER RODS SHALL CONFORM TO THE REQUIREMENTS OF TYPE M BOND BREAKER. SEE SECTION 1028 OF THE STANDARD SPECIFICATIONS.

WHEN CORED SLABS ARE CAST, AN INTERNAL HOLD-DOWN SYSTEM SHALL BE EMPLOYED TO PREVENT VOIDS FROM RISING OR MOVING SIDEWAYS. AT LEAST SIX WEEKS PRIOR TO CASTING CORED SLABS, THE CONTRACTOR SHALL SUBMIT TO THE ENGINEER FOR REVIEW AND COMMENT, DETAILED DRAWINGS OF THE PROPOSED HOLD-DOWN SYSTEM. IN ADDITION TO STRUCTURAL DETAILS, LOCATION AND SPACING OF THE HOLD-DOWNS SHALL BE INDICATED.

THE TRANSFER OF LOAD FROM THE ANCHORAGES TO THE CORED SLAB UNIT SHALL BE DONE WHEN THE CONCRETE HAS REACHED A COMPRESSIVE STRENGTH OF NOT LESS THAN THE REQUIRED STRENGTH SHOWN IN THE "CONCRETE RELEASE STRENGTH" TABLE.

ALL REINFORCING STEEL IN VERTICAL CONCRETE BARRIER RAILS SHALL BE EPOXY COATED.

PRESTRESSING STRANDS SHALL BE CUT FLUSH WITH THE CORED SLAB UNIT ENDS.

APPLY EPOXY PROTECTIVE COATING TO CORED SLAB UNIT ENDS.

GROOVED CONTRACTION JOINTS, 1/2" IN DEPTH, SHALL BE TOOLED IN ALL EXPOSED FACES OF THE BARRIER RAIL AND IN ACCORDANCE WITH ARTICLE 825-10(B) OF THE STANDARD SPECIFICATIONS. A CONTRACTION JOINT SHALL BE LOCATED AT EACH THIRD POINT BETWEEN BARRIER RAIL EXPANSION JOINTS. ONLY ONE CONTRACTION JOINT IS REQUIRED AT MIDPOINT OF BARRIER RAIL SEGMENTS LESS THAN 20 FEET IN LENGTH AND NO CONTRACTION JOINTS ARE REQUIRED FOR THOSE SEGMENTS LESS THAN 10 FEET IN LENGTH.

TRANSVERSE POST TENSIONING OF THE CORED SLAB UNITS SHALL BE DONE IN ACCORDANCE WITH THE STANDARD SPECIFICATIONS.

MAINTAIN A SYMMETRIC TENSION FORCE BETWEEN EACH PAIR OF TRANSVERSE POST TENSIONING STRANDS IN THE DIAPHRAGM.

THE #4 S11 STIRRUPS MAY BE SHIFTED AS NECESSARY TO MAINTAIN 1" CLEAR TO THE GROUTED RECESS.

FOR GROUT FOR STRUCTURES, SEE SPECIAL PROVISIONS.

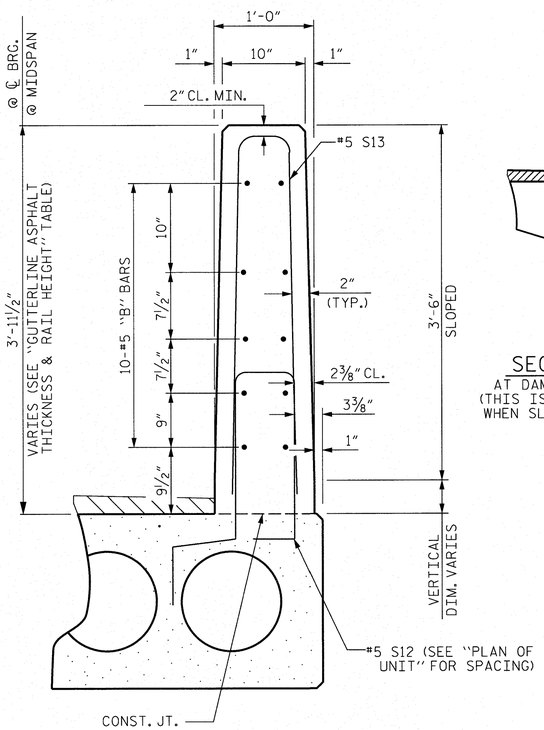

SECTION THRU RAIL

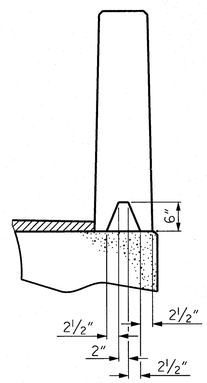

SECTION S-S
AT DAM IN OPEN JOINT
(THIS IS TO BE USED ONLY WHEN SLIP FORM IS USED)

℄ 1/2" EXP. JT. MAT'L HELD IN PLACE WITH GALVANIZED NAILS.
(NOTE: OMIT EXP. JT. MAT'L. WHEN SLIP FORM IS USED)

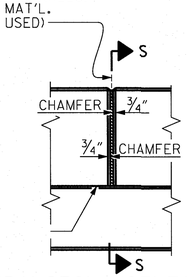

ELEVATION AT EXPANSION JOINTS

BILL OF MATERIAL FOR ONE 70' CORED SLAB UNIT							
				EXTERIOR UNIT		INTERIOR UNIT	
BAR	NUMBER	SIZE	TYPE	LENGTH	WEIGHT	LENGTH	WEIGHT
B22	6	#4	STR	24'-6"	98	24'-6"	98
S10	8	#5	3	4'-10"	40	4'-10"	40
S11	148	#4	3	5'-10"	577	5'-10"	577
*S12	79	#5	1	6'-4"	522		
S14	4	#4	4	5'-8"	15	5'-8"	15
S15	4	#5	3	7'-1"	30	7'-1"	30
REINFORCING STEEL			LBS.		760		760
* EPOXY COATED REINFORCING STEEL			LBS.		522		
7000 P.S.I. CONCRETE			CU. YDS.		12.0		12.0
0.6" Ø L.R. STRANDS			No.		28		28

CONCRETE RELEASE STRENGTH	
UNIT	PSI
60' & 65' UNITS	4800
70' UNITS	5500

BILL OF MATERIAL FOR VERTICAL CONCRETE BARRIER RAIL						
BAR	BARS PER PAIR OF EXTERIOR UNITS	TOTAL NO.	SIZE	TYPE	LENGTH	WEIGHT
	70' UNIT					
*B25	120	120	#5	STR	13'-8"	1711
*S13	158	158	#5	2	7'-2"	1181
* EPOXY COATED REINFORCING STEEL				LBS.		2892
CLASS AA CONCRETE				CU.YDS.		18.9
TOTAL VERTICAL CONCRETE BARRIER RAIL				LN. FT.		140.26

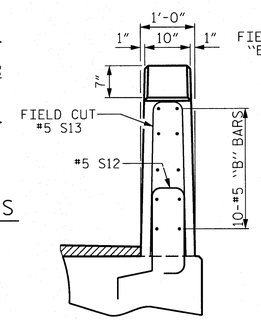

END VIEW

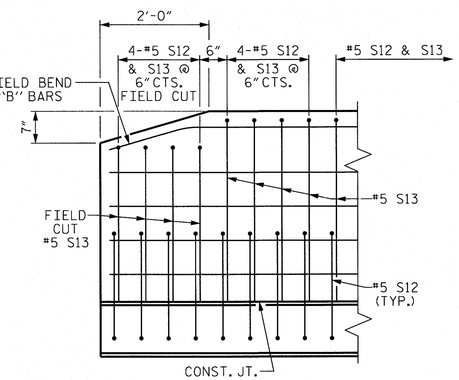

SIDE VIEW

END OF RAIL DETAILS

VERTICAL CONCRETE BARRIER RAIL DETAILS

GRADE 270 STRANDS	
	0.6" Ø L.R.
AREA (SQUARE INCHES)	0.217
ULTIMATE STRENGTH (LBS. PER STRAND)	58,600
APPLIED PRESTRESS (LBS. PER STRAND)	43,950

PROJECT NO. 17BP.14.R.12
TRANSYLVANIA COUNTY
STATION: 13+19.90 -L-

SHEET 3 OF 3

STATE OF NORTH CAROLINA
DEPARTMENT OF TRANSPORTATION
RALEIGH
STANDARD

MISC. INFO.
24" CORED SLAB
UNIT 75°/105° SKEW

ASSEMBLED BY : C. POWELL DATE : 12/2012
CHECKED BY : M. WINTERS DATE : 04/2013
DESIGN ENGINEER OF RECORD : M. WINTERS DATE :

DRAWN BY : MAA 6/10
CHECKED BY : MKT 7/10

REV. 12/11 MAA/AAC

moffatt & nichol
1616 EAST MILLBROOK ROAD, SUITE 160
RALEIGH, NORTH CAROLINA 27609
(919) 781-4626 VOICE (919) 781-4869 FAX

NORTH CAROLINA PROFESSIONAL SEAL 026433 ENGINEER MARIE E. WINTERS
5/9/2014

REVISIONS							SHEET NO.
NO.	BY:	DATE:	NO.	BY:	DATE:		S-7
1			3				TOTAL SHEETS
2			4				14

STD. NO. 24PCS3_33_75&105S

5/9/2014
P:\7658-08\CADD\870195\Structures\870195_24CSU_DETAILS.dgn
thuffman

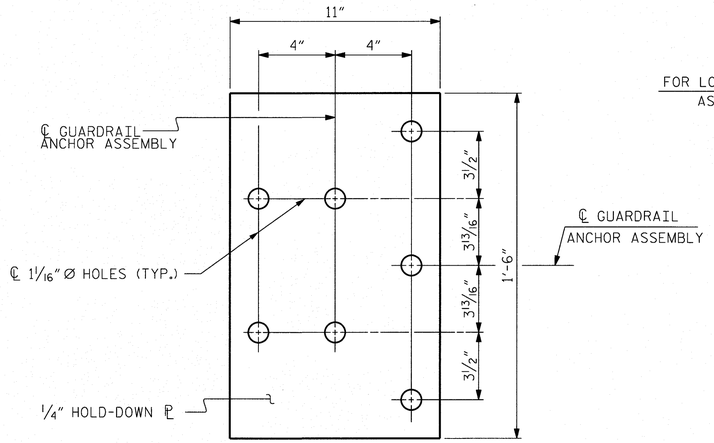

PLAN

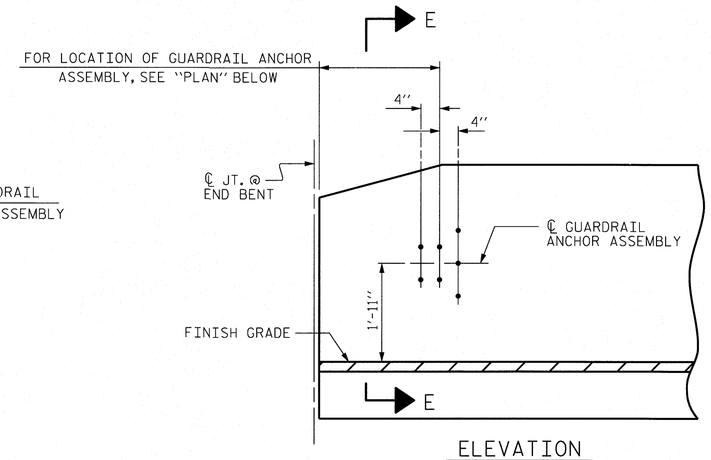

ELEVATION

NOTES

THE GUARDRAIL ANCHOR ASSEMBLY SHALL CONSIST OF A 1/4" HOLD DOWN PLATE AND 7 - 7/8" Ø BOLTS WITH NUTS AND WASHERS.

THE HOLD-DOWN PLATE SHALL CONFORM TO AASHTO M270 GRADE 36. AFTER FABRICATION, THE HOLD-DOWN PLATE SHALL BE HOT-DIP GALVANIZED IN ACCORDANCE WITH AASHTO M111.

BOLTS SHALL CONFORM TO THE REQUIREMENTS OF ASTM A307 AND NUTS SHALL CONFORM TO THE REQUIREMENTS OF AASHTO M291. BOLTS, NUTS AND WASHERS SHALL BE GALVANIZED. (AT THE CONTRACTOR'S OPTION, STAINLESS STEEL BOLTS, NUTS AND WASHERS MAY BE USED AS AN ALTERNATE FOR THE 7/8" Ø GALVANIZED BOLTS, NUTS AND WASHERS. THEY SHALL CONFORM TO OR EXCEED THE MECHANICAL REQUIREMENTS OF ASTM A307. THE USE OF THIS ALTERNATE SHALL BE APPROVED BY THE ENGINEER.)

THE GUARDRAIL ANCHOR ASSEMBLY IS REQUIRED AT ALL POINTS WHERE APPROACH GUARDRAIL IS TO BE ATTACHED TO THE END OF BARRIER RAIL. FOR POINTS OF ATTACHMENT, SEE SKETCH.

AFTER INSTALLATION, THE EXPOSED THREAD OF THE BOLT SHALL BE BURRED WITH A SHARP POINTED TOOL.

THE COST OF THE GUARDRAIL ANCHOR ASSEMBLY SHALL BE INCLUDED IN THE UNIT CONTRACT PRICE BID FOR VERTICAL CONCRETE BARRIER RAIL.

THE VERTICAL REINFORCING BARS MAY BE SHIFTED SLIGHTLY IN THE VERTICAL CONCRETE BARRIER RAIL TO CLEAR ASSEMBLY BOLTS.

THE 1 1/4" Ø HOLES SHALL BE FORMED OR DRILLED WITH A CORE BIT. IMPACT TOOLS WILL NOT BE PERMITTED. ANY CONCRETE DAMAGED BY THIS WORK SHALL BE REPAIRED TO THE SATISFACTION OF THE ENGINEER.

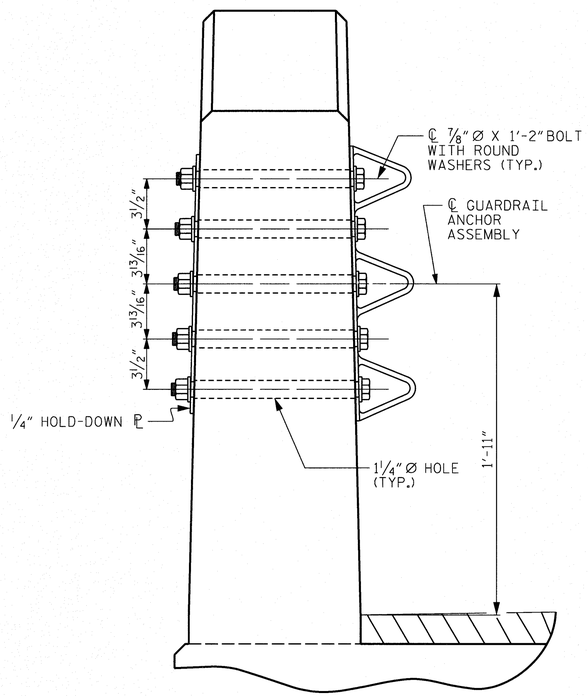

SECTION E-E

GUARDRAIL ANCHOR ASSEMBLY DETAILS

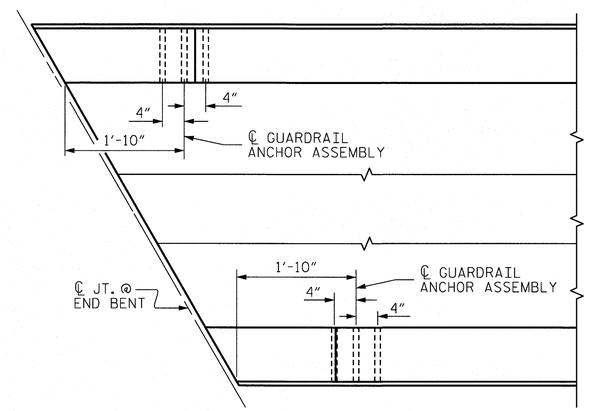

PLAN

LOCATION OF ANCHORS FOR GUARDRAIL

END BENT #1 SHOWN, END BENT #2 SIMILAR.

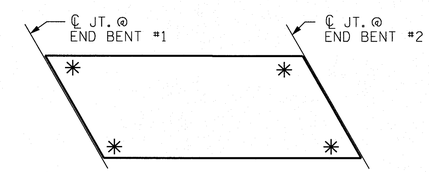

SKETCH SHOWING POINTS OF ATTACHMENT

✳ DENOTES GUARDRAIL ANCHOR ASSEMBLY

PROJECT NO. 17BP.14.R.12

TRANSYLVANIA COUNTY

STATION: 13+19.90 -L-

STATE OF NORTH CAROLINA
DEPARTMENT OF TRANSPORTATION
RALEIGH

STANDARD
GUARDRAIL ANCHORAGE FOR VERTICAL CONCRETE BARRIER RAIL

ASSEMBLED BY : C. POWELL	DATE : 12/2012		
CHECKED BY : M. WINTERS	DATE : 04/2013		
DESIGN ENGINEER OF RECORD : M. WINTERS	DATE :		
DRAWN BY : MAA 5/10	ADDED 5/6/10		
CHECKED BY : GM 5/10	REV. 10/1/11	MAA/GM	
	REV. 12/5/11	MAA/GM	

moffatt & nichol
1616 EAST MILLBROOK ROAD, SUITE 160
RALEIGH, NORTH CAROLINA 27609
(919) 781-4626 VOICE (919) 781-4869 FAX

NORTH CAROLINA PROFESSIONAL SEAL 026433 ENGINEER MICHELE E. WINTERS 5/9/2014

REVISIONS

NO.	BY:	DATE:	NO.	BY:	DATE:
1			3		
2			4		

SHEET NO. S-8

TOTAL SHEETS 14

5/9/2014
R:\Structures\870195_gra3_12.dgn
thuffman

Sheet 3 at less than 90

(SHT 3) STD. NO. GRA3

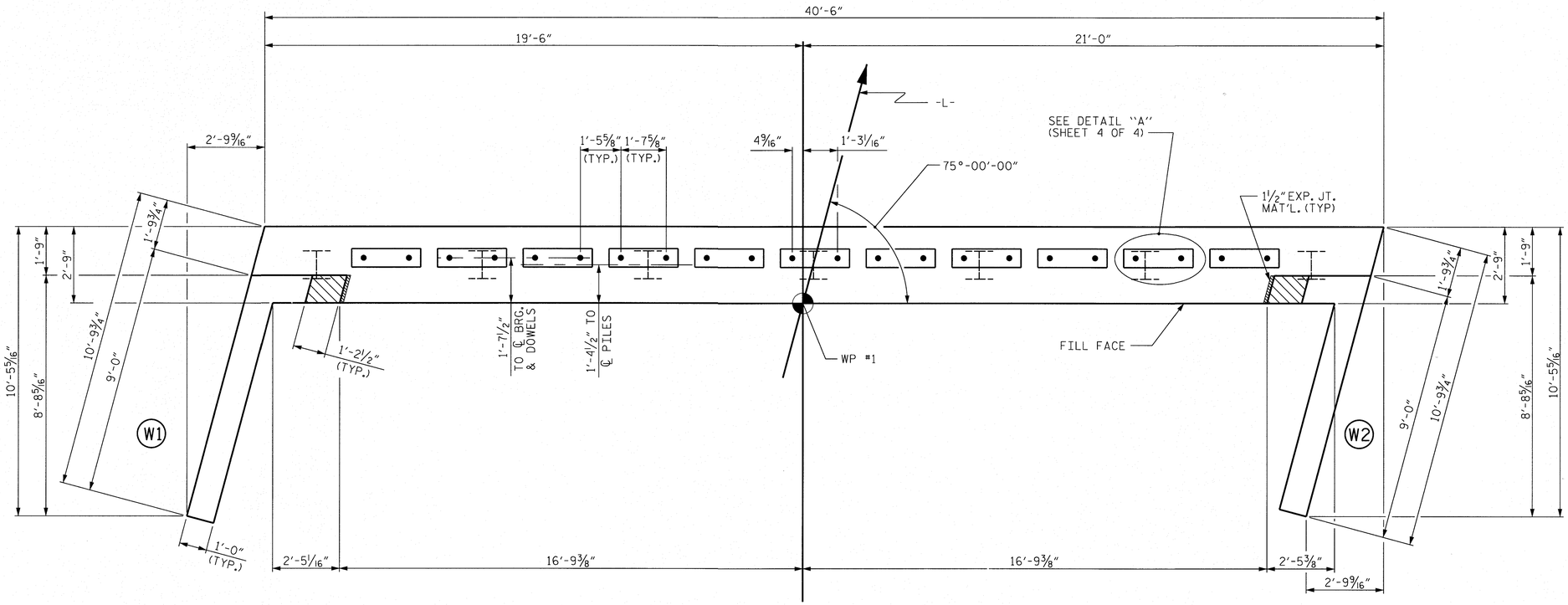

PLAN

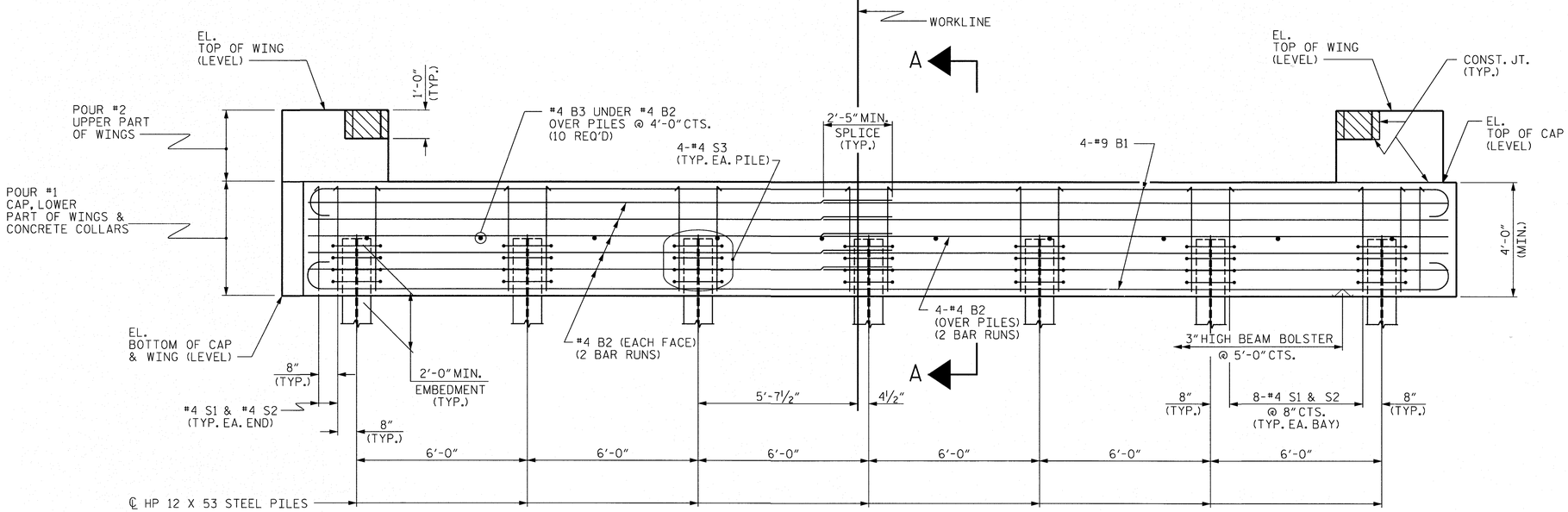

ELEVATION

WINGS NOT SHOWN FOR CLARITY.
FOR SECTION A-A, SEE SHEET 4 OF 4.
CONCRETE COLLARS FOR STEEL PILES NOT SHOWN IN PLAN AND ELEVATION VIEWS FOR CLARITY.
SEE "CORROSION PROTECTION FOR STEEL PILES DETAIL", SHEET 4 OF 4.

NOTES

STIRRUPS IN CAP MAY BE SHIFTED AS NECESSARY TO CLEAR DOWELS.

THE CONCRETE IN THE SHADED AREA OF THE WING SHALL BE POURED AFTER THE VERTICAL CONCRETE BARRIER RAIL IS CAST IF SLIP FORMING IS USED.

FOR PILE SPLICE DETAILS, SEE SHEET 4 OF 4.

FOR WING DETAILS, SEE SHEET 3 OF 4.

PROJECT NO. 17BP.14.R.12
TRANSYLVANIA COUNTY
STATION: 13+19.90 -L-

SHEET 1 OF 4

STATE OF NORTH CAROLINA
DEPARTMENT OF TRANSPORTATION
RALEIGH

SUBSTRUCTURE

END BENT No. 1

REVISIONS						SHEET NO.
NO.	BY:	DATE:	NO.	BY:	DATE:	S-9
1			3			TOTAL SHEETS
2			4			14

ASSEMBLED BY : C. POWELL DATE : 12/2012
CHECKED BY : M. WINTERS DATE : 04/2013
DESIGN ENGINEER OF RECORD : M. WINTERS DATE :

DRAWN BY : WJH 12/11
CHECKED BY : AAC 12/11

moffatt & nichol
1616 EAST MILLBROOK ROAD, SUITE 160
RALEIGH, NORTH CAROLINA 27609
(919) 781-4626 VOICE (919) 781-4869 FAX

NORTH CAROLINA PROFESSIONAL SEAL 026433 ENGINEER MINELLE E. WINTERS
5/9/2014

5/9/2014
P:\7658-08\CADD\870195\Structures\870195_EB_1.dgn
thuffman

STD. NO. EB_33_75S4

NOTES

STIRRUPS IN CAP MAY BE SHIFTED AS NECESSARY TO CLEAR DOWELS.

THE CONCRETE IN THE SHADED AREA OF THE WING SHALL BE POURED AFTER THE VERTICAL CONCRETE BARRIER RAIL IS CAST IF SLIP FORMING IS USED.

FOR PILE SPLICE DETAILS, SEE SHEET 4 OF 4.

FOR WING DETAILS, SEE SHEET 3 OF 4.

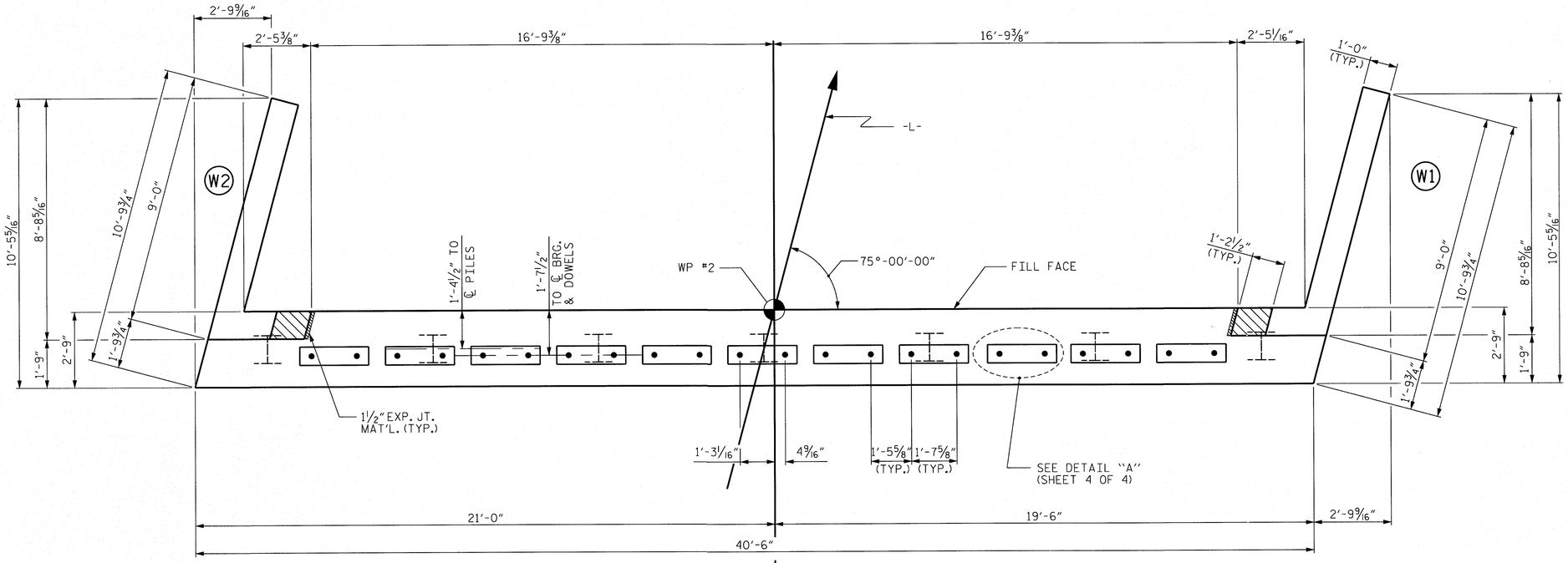

PLAN

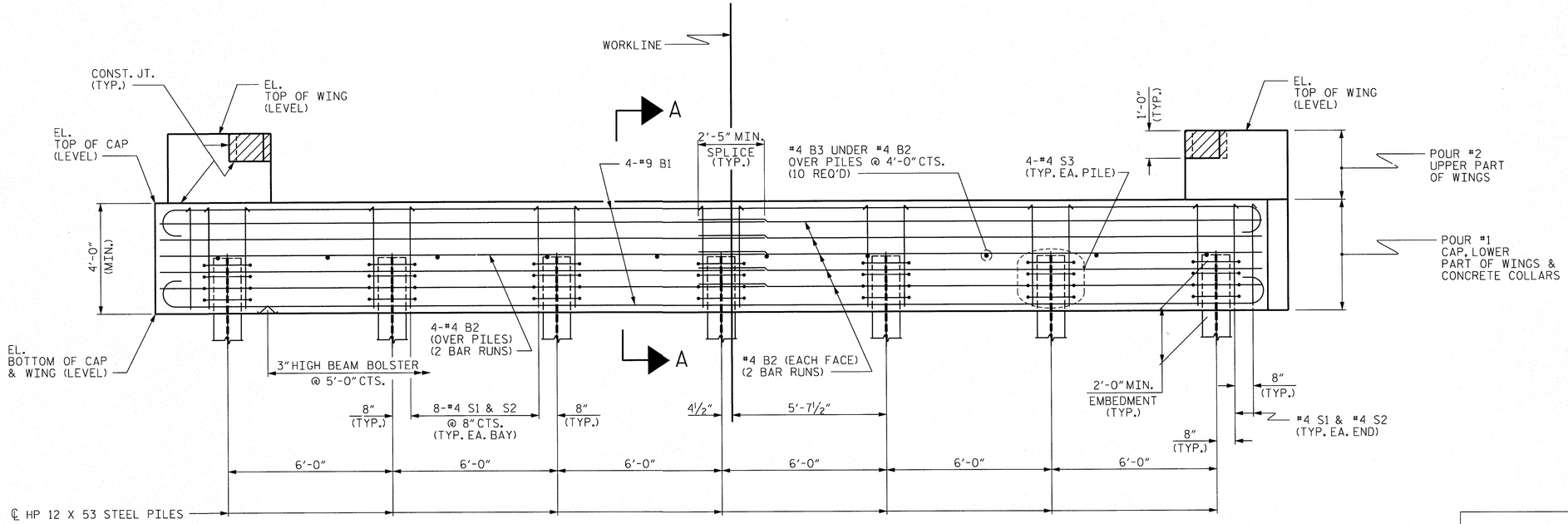

ELEVATION

WINGS NOT SHOWN FOR CLARITY.
FOR SECTION A-A, SEE SHEET 4 OF 4.
CONCRETE COLLARS FOR STEEL PILES NOT SHOWN IN PLAN AND ELEVATION VIEWS FOR CLARITY.
SEE "CORROSION PROTECTION FOR STEEL PILES DETAIL", SHEET 4 OF 4.

PROJECT NO. 17BP.14.R.12
TRANSYLVANIA COUNTY
STATION: 13+19.90 -L-

SHEET 2 OF 4

STATE OF NORTH CAROLINA
DEPARTMENT OF TRANSPORTATION
RALEIGH

SUBSTRUCTURE

END BENT No. 2

ASSEMBLED BY : C. POWELL	DATE : 12/2012
CHECKED BY : M. WINTERS	DATE : 04/2013
DESIGN ENGINEER OF RECORD : M. WINTERS	DATE :
DRAWN BY : WJH 12/11	
CHECKED BY : AAC 12/11	

moffatt & nichol
1616 EAST MILLBROOK ROAD, SUITE 160
RALEIGH, NORTH CAROLINA 27609
(919) 781-4626 VOICE (919) 781-4869 FAX

NORTH CAROLINA PROFESSIONAL SEAL 026433 ENGINEER MIKELE E. WINTERS
5/9/2014

REVISIONS						
NO.	BY:	DATE:	NO.	BY:	DATE:	
1			3			
2			4			

SHEET NO. S-10
TOTAL SHEETS 14

STD. NO. EB_33_75S4

5/9/2014
R:\7658-08\CADD\870195\Structures\870195_EB_2.dgn
thuffman

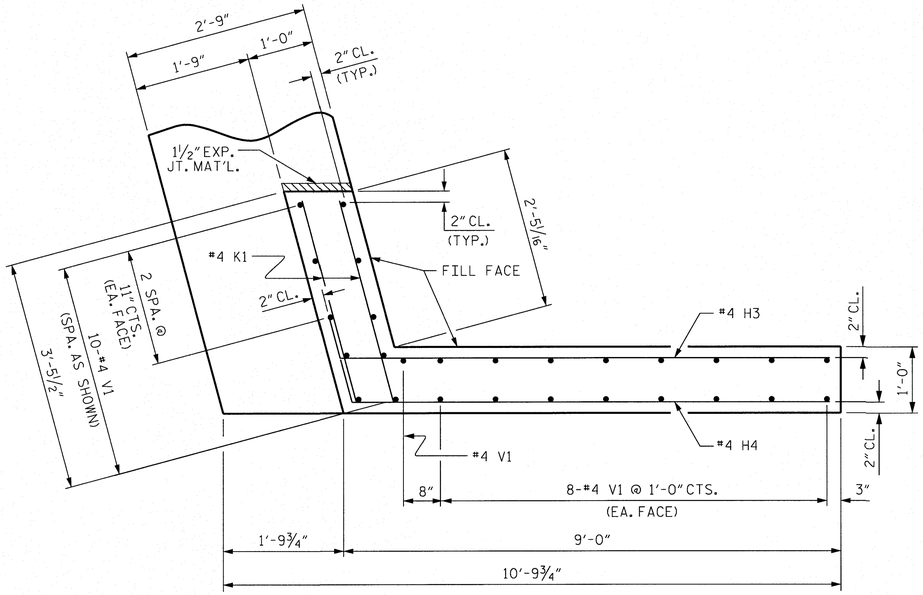

PLAN OF WING (W1)

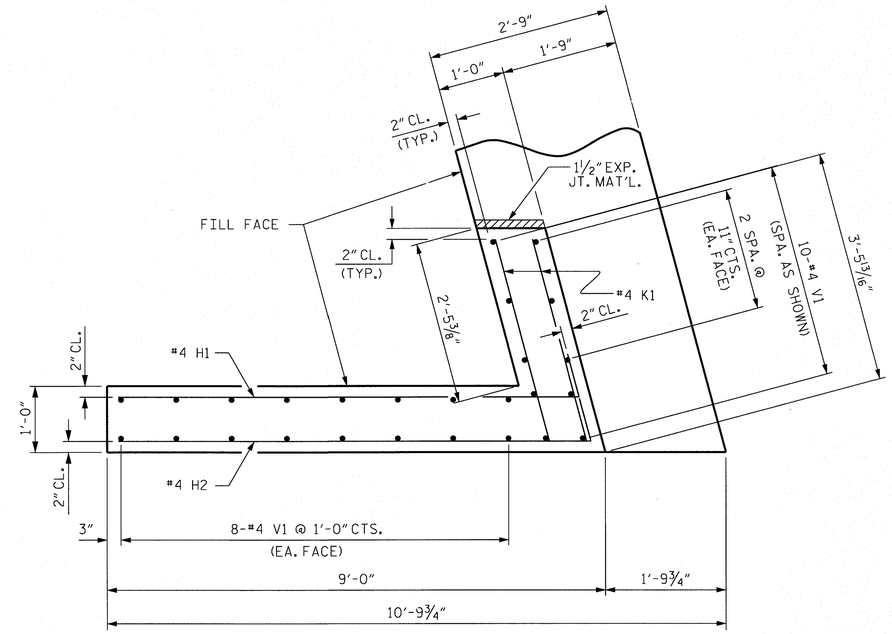

PLAN OF WING (W2)

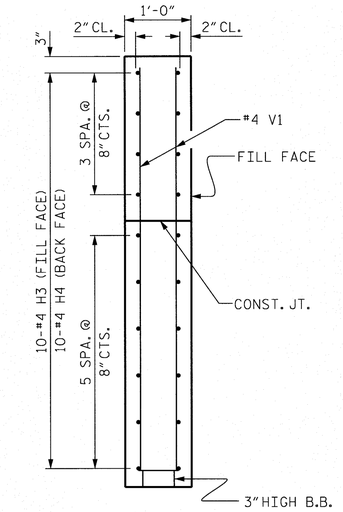

SECTION X-X

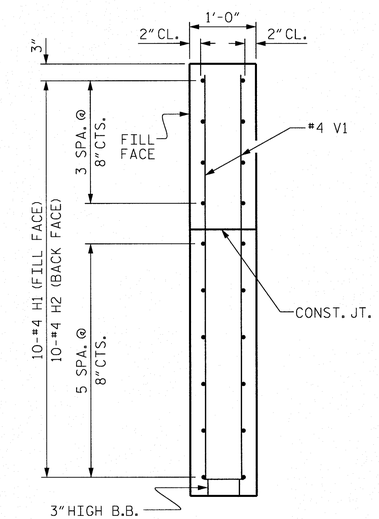

SECTION Y-Y

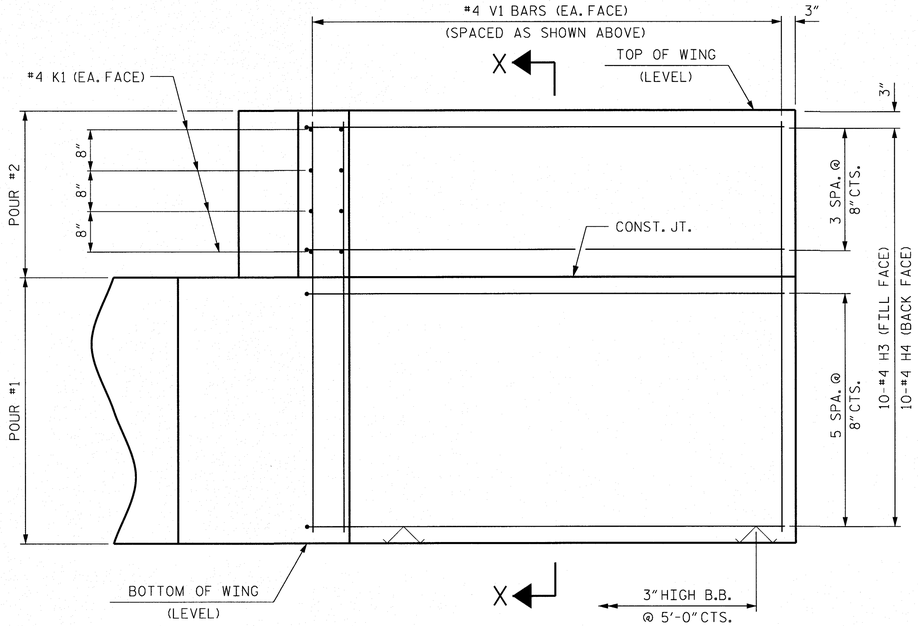

ELEVATION OF WING (W1)

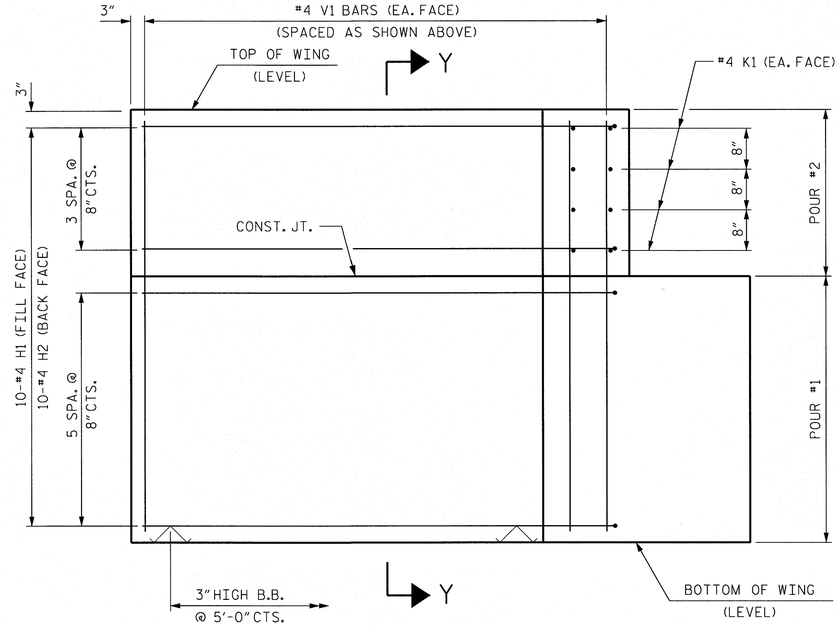

ELEVATION OF WING (W2)

WING DETAILS

ASSEMBLED BY : C. POWELL	DATE : 12/2012		
CHECKED BY : M. WINTERS	DATE : 04/2013		
DESIGN ENGINEER OF RECORD : M. WINTERS	DATE :		
DRAWN BY : WJH 12/11			
CHECKED BY : AAC 12/11			

moffatt & nichol
1616 EAST MILLBROOK ROAD, SUITE 160
RALEIGH, NORTH CAROLINA 27609
(919) 781-4626 VOICE (919) 781-4869 FAX

NORTH CAROLINA PROFESSIONAL SEAL 026433 ENGINEER MICHELE E. WINTERS 5/9/2014

PROJECT NO. 17BP.14.R.12

TRANSYLVANIA COUNTY

STATION: 13+19.90 -L-

SHEET 3 OF 4

STATE OF NORTH CAROLINA
DEPARTMENT OF TRANSPORTATION
RALEIGH

SUBSTRUCTURE
END BENT
WING DETAILS

REVISIONS								SHEET NO.
NO.	BY:	DATE:	NO.	BY:	DATE:			S-11
1			3					TOTAL SHEETS
2			4					14

5/9/2014
P:\7658-08\CADD\870195\Structures\870195_EB_WING_DETAILS.dgn
thuffman

STD. NO. EB_33_75S4

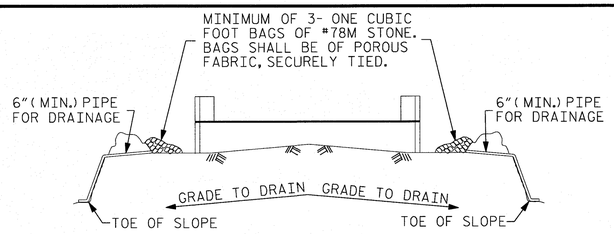

BAGGED STONE AND PIPE SHALL BE PLACED IMMEDIATELY AFTER COMPLETION OF END BENT EXCAVATION. PIPE MAY BE EITHER CONCRETE, CORRUGATED STEEL, CORRUGATED ALUMINUM ALLOY, OR CORRUGATED PLASTIC. PERFORATED PIPE WILL NOT BE ALLOWED.

BAGGED STONE SHALL REMAIN IN PLACE UNTIL THE ENGINEER DIRECTS THAT IT BE REMOVED. THE CONTRACTOR SHALL REMOVE AND DISPOSE OF SILT ACCUMULATIONS AT BAGGED STONE WHEN SO DIRECTED BY THE ENGINEER. BAGS SHALL BE REMOVED AND REPLACED WHENEVER THE ENGINEER DETERMINES THAT THEY HAVE DETERIORATED AND LOST THEIR EFFECTIVENESS.

NO SEPARATE PAYMENT WILL BE MADE FOR THIS WORK AND THE ENTIRE COST OF THIS WORK SHALL BE INCLUDED IN THE UNIT CONTRACT PRICE BID FOR THE SEVERAL PAY ITEMS.

TEMPORARY DRAINAGE AT END BENT

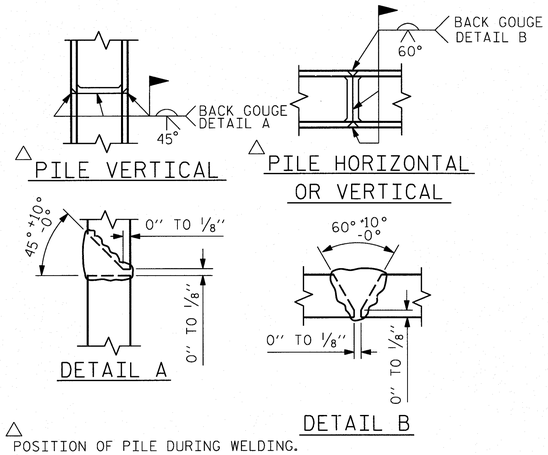

△ POSITION OF PILE DURING WELDING.

PILE SPLICE DETAILS

BAR TYPES

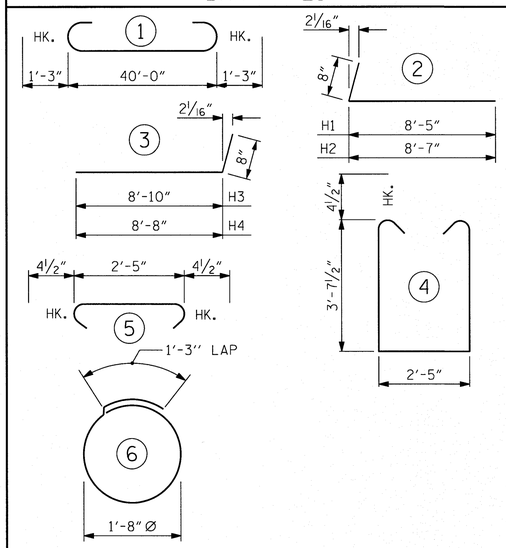

ALL BAR DIMENSIONS ARE OUT TO OUT

END BENT No. 1	END BENT No. 2
HP 12 X 53 STEEL PILES	HP 12 X 53 STEEL PILES
NO: 7 LIN. FT.= 160	NO: 7 LIN. FT.= 210

BILL OF MATERIAL FOR ONE END BENT

BAR	NO.	SIZE	TYPE	LENGTH	WEIGHT
B1	8	#9	1	42'-6"	1156
B2	28	#4	STR	21'-4"	399
B3	10	#4	STR	2'-5"	16
D1	22	#6	STR	1'-6"	50
H1	10	#4	2	9'-1"	61
H2	10	#4	2	9'-3"	62
H3	10	#4	3	9'-6"	63
H4	10	#4	3	9'-4"	62
K1	16	#4	STR	3'-1"	33
S1	52	#4	4	10'-5"	362
S2	52	#4	5	3'-2"	110
S3	28	#4	6	6'-6"	122
V1	53	#4	STR	6'-2"	218

REINFORCING STEEL (FOR ONE END BENT) 2714 LBS.

CLASS A CONCRETE BREAKDOWN (FOR ONE END BENT)

POUR #1 CAP, LOWER PART OF WINGS & COLLARS 20.1 C.Y.

POUR #2 UPPER PART OF WINGS 2.1 C.Y.

TOTAL CLASS A CONCRETE 22.2 C.Y.

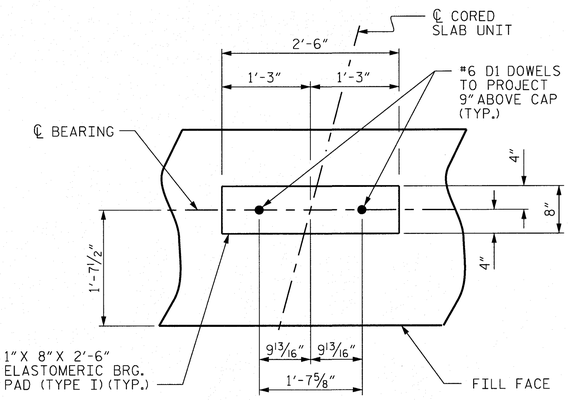

DETAIL "A"

(END BENT No. 1 SHOWN, END BENT No. 2 SIMILAR BY ROTATION)

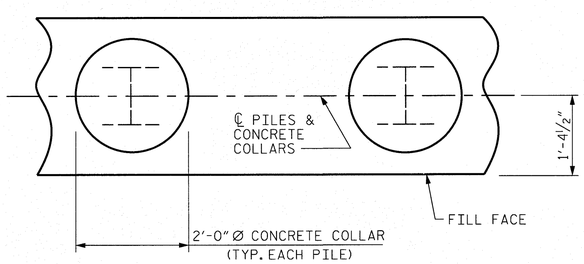

PLAN

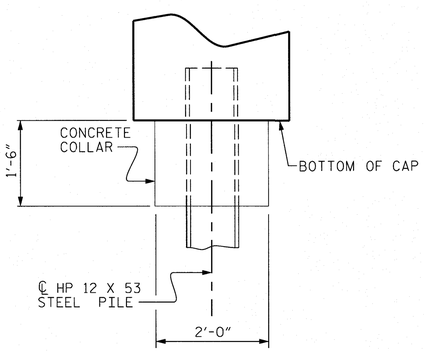

ELEVATION

CORROSION PROTECTION FOR STEEL PILES DETAIL

(END BENT No. 1 SHOWN, END BENT No. 2 SIMILAR BY ROTATION)

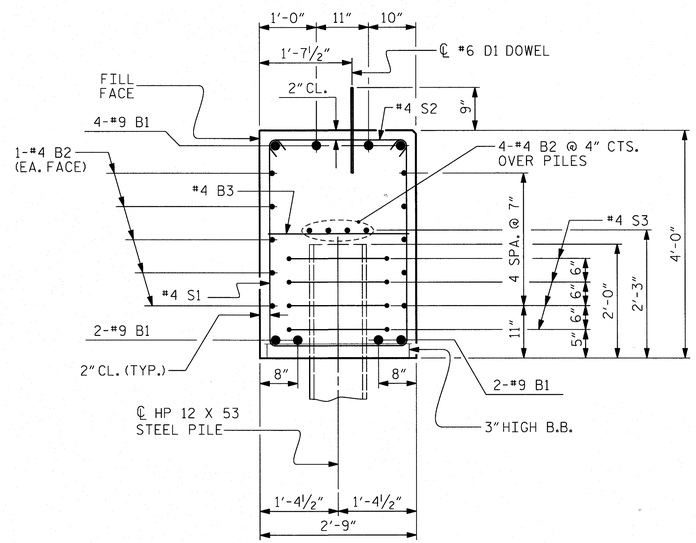

SECTION A-A

(CONCRETE COLLAR NOT SHOWN FOR CLARITY. SEE "CORROSION PROTECTION FOR STEEL PILES DETAIL.")

PROJECT NO. 17BP.14.R.12

TRANSYLVANIA COUNTY

STATION: 13+19.90 -L-

SHEET 4 OF 4

STATE OF NORTH CAROLINA
DEPARTMENT OF TRANSPORTATION
RALEIGH

SUBSTRUCTURE

END BENT No. 1 & 2 DETAILS

REVISIONS						SHEET NO.
NO.	BY:	DATE:	NO.	BY:	DATE:	S-12
1			3			TOTAL SHEETS
2			4			14

ASSEMBLED BY : C. POWELL DATE : 12/2012
CHECKED BY : M. WINTERS DATE : 04/2013
DESIGN ENGINEER OF RECORD : M. WINTERS DATE :

DRAWN BY : WJH 12/11
CHECKED BY : AAC 12/11

moffatt & nichol
1616 EAST MILLBROOK ROAD, SUITE 160
RALEIGH, NORTH CAROLINA 27609
(919) 781-4626 VOICE (919) 781-4869 FAX

NORTH CAROLINA PROFESSIONAL SEAL 026433 ENGINEER MIKKLE E. WINTERS 5/9/2014

5/9/2014
P:\7658-08\CADD\870195\Structures\870195_EB_DETAILS.dgn
thuffman

STD. NO. EB_33_75S4

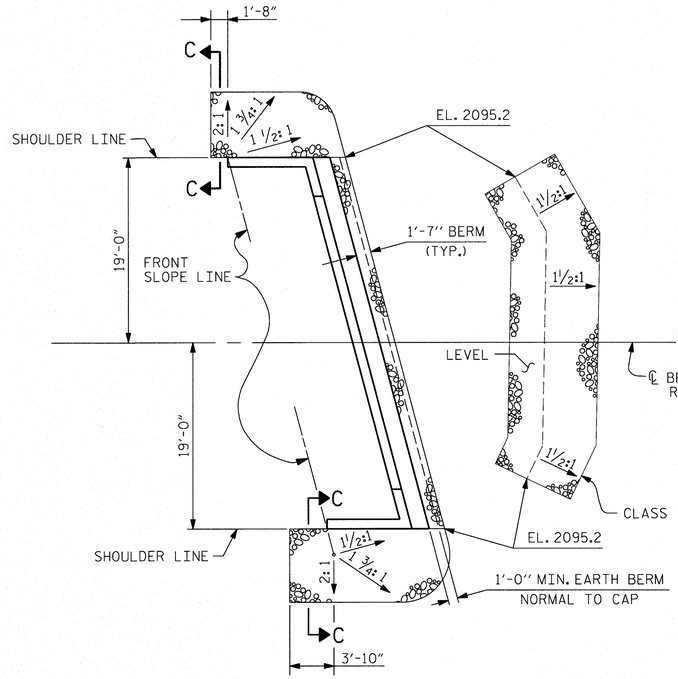

END BENT 1

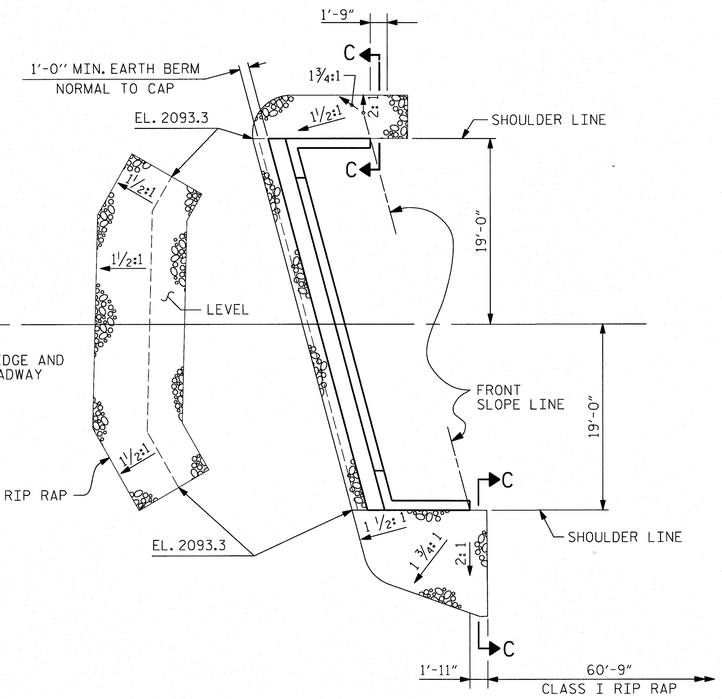

END BENT 2

PLAN OF RIP RAP

ESTIMATED QUANTITIES		
BRIDGE @ STA. 13+19.90 -L-	RIP RAP CLASS II (2'-0" THICK)	GEOTEXTILE FOR DRAINAGE
	TONS	SQUARE YARDS
END BENT 1	47	59
END BENT 2	44	55

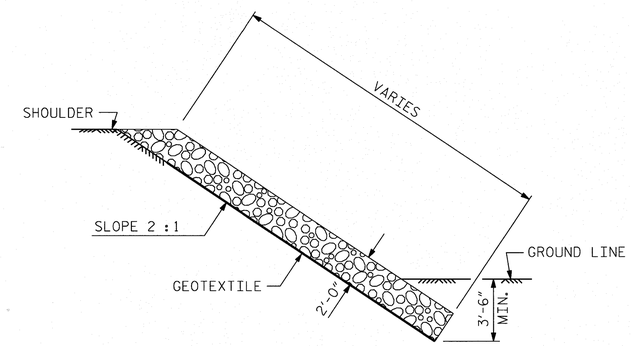

SECTION C-C

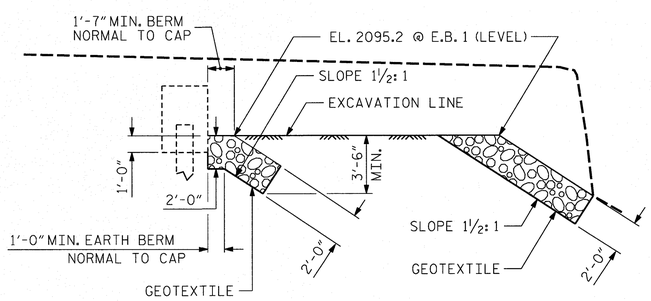

℄ SECTION
BERM RIP RAPPED
@ END BENT 1

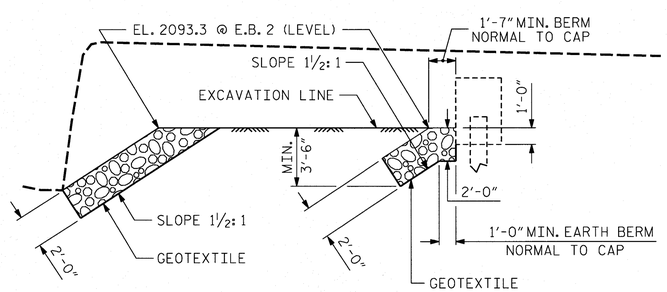

℄ SECTION
BERM RIP RAPPED
@ END BENT 2

PROJECT NO. 17BP.14.R.12
TRANSYLVANIA COUNTY
STATION: 13+19.90 -L-

STATE OF NORTH CAROLINA
DEPARTMENT OF TRANSPORTATION
RALEIGH
STANDARD
RIP RAP DETAILS

ASSEMBLED BY : C. POWELL DATE : 12/2012
CHECKED BY : M. WINTERS DATE : 04/2013
DESIGN ENGINEER OF RECORD : M. WINTERS DATE :

DRAWN BY : REK 1/84
CHECKED BY : RDU 1/84

REV. 5/1/06R TLA/GM
REV. 10/1/11 MAA/GM
REV. 12/21/11 MAA/GM

moffatt & nichol
1616 EAST MILLBROOK ROAD, SUITE 160
RALEIGH, NORTH CAROLINA 27609
(919) 781-4626 VOICE (919) 781-4869 FAX

NORTH CAROLINA PROFESSIONAL SEAL 026433 ENGINEER MICHELE E. WINTERS
5/9/2014

REVISIONS								SHEET NO.
NO.	BY:	DATE:	NO.	BY:	DATE:			S-13
1			3					TOTAL SHEETS
2			4					14

5/9/2014
R:\Structures\870195_rr1_12.dgn
thuffman

STD. NO. RR1

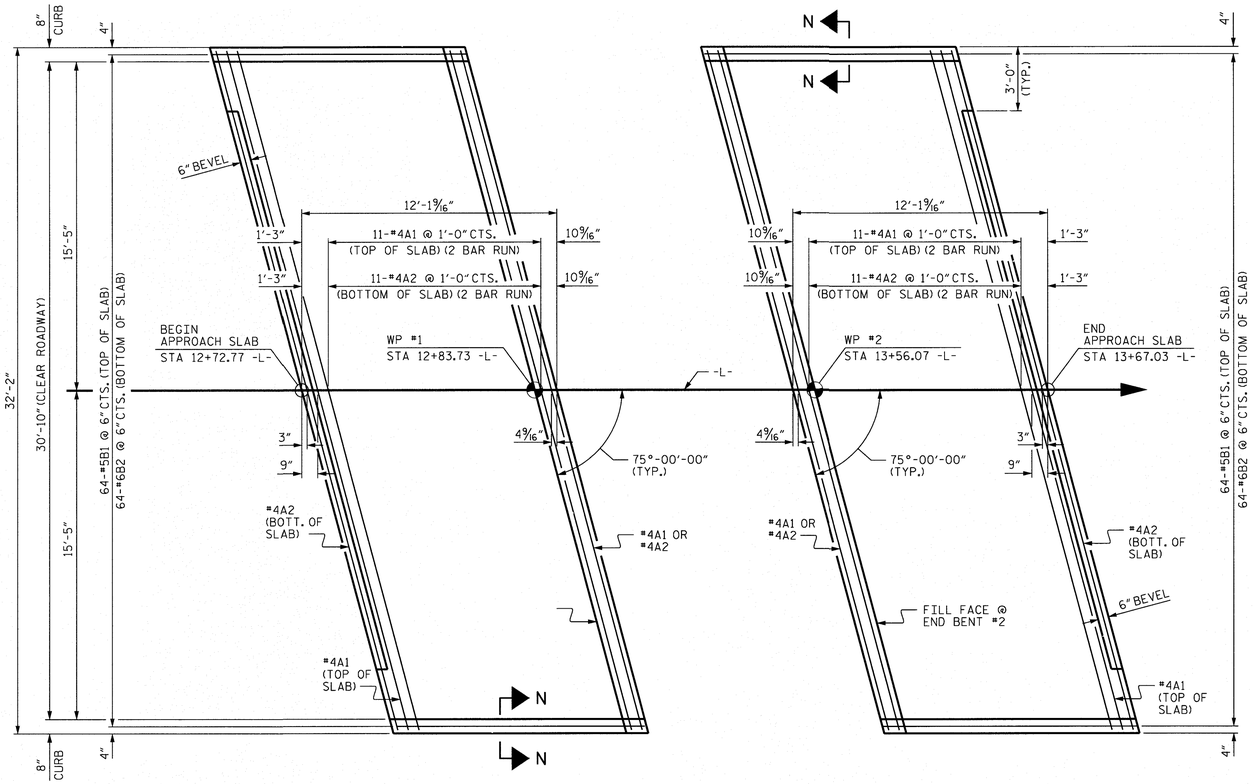

PLAN @ END BENT #1

PLAN @ END BENT #2

DIMENSIONS SHOWN ARE TYPICAL FOR BOTH APPROACH SLABS

NOTES

FOR REINFORCED BRIDGE APPROACH FILL INCLUDING GEOTEXTILE, IMPERMEABLE GEOMEMBRANE, 4"Ø DRAINAGE PIPE, #78M STONE, AND SELECT MATERIAL, SEE ROADWAY PLANS.

AREA BETWEEN THE WINGWALL AND APPROACH SLAB SHALL BE GRADED TO DRAIN THE WATER AWAY FROM THE FILL FACE OF THE BRIDGE AND SHALL BE PAVED. SEE ROADWAY PLANS.

APPROACH SLAB GROOVING IS NOT REQUIRED.

BILL OF MATERIAL

APPROACH SLAB AT EB #1

BAR	NO.	SIZE	TYPE	LENGTH	WEIGHT
* A1	26	#4	STR	17'-6"	304
A2	26	#4	STR	17'-5"	302
* B1	64	#5	STR	11'-1"	740
B2	64	#6	STR	11'-7"	1113
REINFORCING STEEL				LBS.	1415
* EPOXY COATED REINFORCING STEEL				LBS.	1044
CLASS AA CONCRETE				C. Y.	18.7

APPROACH SLAB AT EB #2

BAR	NO.	SIZE	TYPE	LENGTH	WEIGHT
* A1	26	#4	STR	17'-6"	304
A2	26	#4	STR	17'-5"	302
* B1	64	#5	STR	11'-1"	740
B2	64	#6	STR	11'-7"	1113
REINFORCING STEEL				LBS.	1415
* EPOXY COATED REINFORCING STEEL				LBS.	1044
CLASS AA CONCRETE				C. Y.	18.7

SPLICE LENGTHS

BAR SIZE	EPOXY COATED	UNCOATED
#4	2'-0"	1'-9"
#5	2'-6"	2'-2"
#6	3'-10"	2'-7"

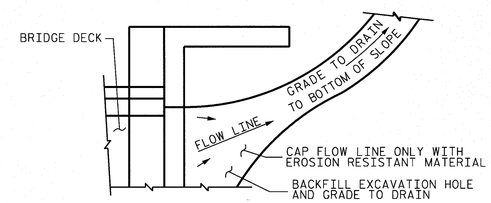

NOTE: IF THE APPROACH SLAB IS NOT CONSTRUCTED IMMEDIATELY AFTER THE BACKFILLING OF THE END BENT EXCAVATION, GRADE TO DRAIN TO THE BOTTOM OF THE SLOPE AND PROVIDE EROSION RESISTANT MATERIAL, SUCH AS FIBERGLASS ROVING OR AS DIRECTED BY THE ENGINEER TO PREVENT SOIL EROSION AND TO PROTECT THE AREA ADJACENT TO THE STRUCTURE. THE CONTRACTOR WILL BE REQUIRED TO REMOVE THESE MATERIALS PRIOR TO CONSTRUCTION OF THE APPROACH SLAB.

TEMPORARY DRAINAGE DETAIL

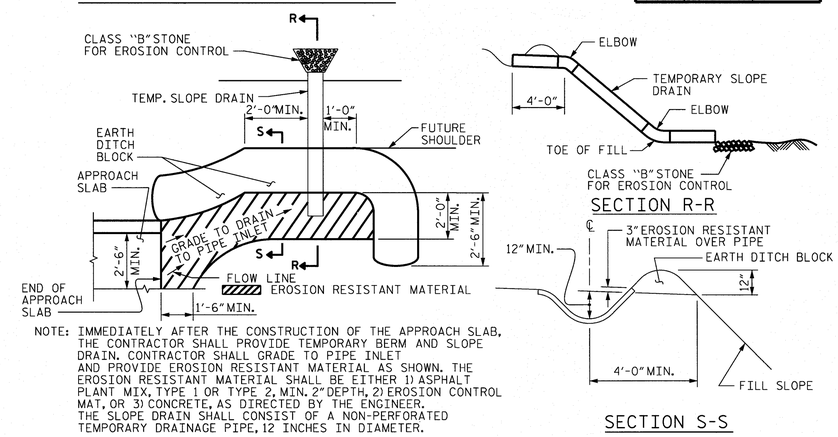

PLAN VIEW

NOTE: IMMEDIATELY AFTER THE CONSTRUCTION OF THE APPROACH SLAB, THE CONTRACTOR SHALL PROVIDE TEMPORARY BERM AND SLOPE DRAIN. CONTRACTOR SHALL GRADE TO PIPE INLET AND PROVIDE EROSION RESISTANT MATERIAL AS SHOWN. THE EROSION RESISTANT MATERIAL SHALL BE EITHER 1) ASPHALT PLANT MIX, TYPE 1 OR TYPE 2, MIN. 2" DEPTH, 2) EROSION CONTROL MAT, OR 3) CONCRETE, AS DIRECTED BY THE ENGINEER. THE SLOPE DRAIN SHALL CONSIST OF A NON-PERFORATED TEMPORARY DRAINAGE PIPE, 12 INCHES IN DIAMETER.

TEMPORARY BERM AND SLOPE DRAIN DETAILS

(TO BE USED WHEN SHOULDER BERM GUTTER IS REQUIRED)

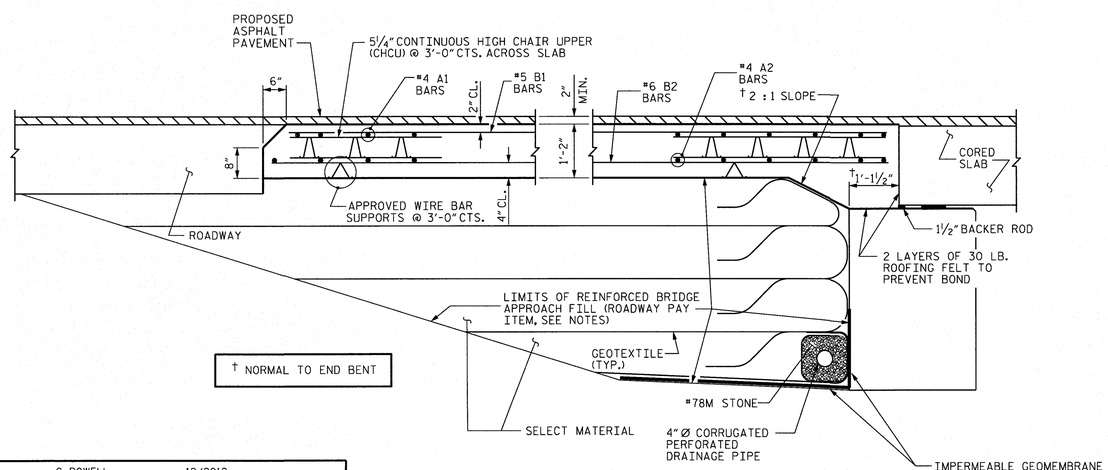

† NORMAL TO END BENT

SECTION THRU SLAB

4"Ø PERFORATED PIPE OUTFALL NEEDS TO BE INSTALLED ABOVE THE WATER SURFACE

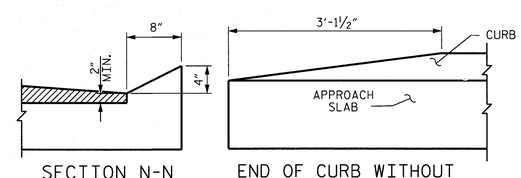

SECTION N-N

END OF CURB WITHOUT SHOULDER BERM GUTTER

CURB DETAILS

PROJECT NO. 17BP.14.R.12

TRANSYLVANIA COUNTY

STATION: 13+19.90 -L-

STATE OF NORTH CAROLINA
DEPARTMENT OF TRANSPORTATION
RALEIGH

STANDARD BRIDGE APPROACH SLAB FOR PRESTRESSED CONCRETE CORED SLAB UNIT (SUB-REGIONAL TIER) 75° SKEW

ASSEMBLED BY : C. POWELL DATE : 12/2012
CHECKED BY : M. WINTERS DATE : 04/2013
DESIGN ENGINEER OF RECORD : M. WINTERS DATE :

DRAWN BY : SHS/MAA 5-09
CHECKED BY : BCH 5-09

REV. 12-11 MAA/AAC

moffatt & nichol
1616 EAST MILLBROOK ROAD, SUITE 160
RALEIGH, NORTH CAROLINA 27609
(919) 781-4626 VOICE (919) 781-4869 FAX

NORTH CAROLINA PROFESSIONAL SEAL 026433 ENGINEER MICHELE E. WINTERS 5/9/2014

REVISIONS							SHEET NO.
NO.	BY:	DATE:	NO.	BY:	DATE:		S-14
1			3				TOTAL SHEETS
2			4				14

STD. NO. BAS_33_75S

5/9/2014
P:\7658-08\CADD\870195\Structures\870195_APP_SLAB_1.dgn
thuffman

STANDARD NOTES

DESIGN DATA:

SPECIFICATIONS	A.A.S.H.T.O. (CURRENT)
LIVE LOAD	SEE PLANS
IMPACT ALLOWANCE	SEE A.A.S.H.T.O.
STRESS IN EXTREME FIBER OF	
STRUCTURAL STEEL - AASHTO M270 GRADE 36	20,000 LBS. PER SQ. IN.
- AASHTO M270 GRADE 50W	27,000 LBS. PER SQ. IN.
- AASHTO M270 GRADE 50	27,000 LBS. PER SQ. IN.
REINFORCING STEEL IN TENSION	
GRADE 60	24,000 LBS. PER SQ. IN.
CONCRETE IN COMPRESSION	1,200 LBS. PER SQ. IN.
CONCRETE IN SHEAR	SEE A.A.S.H.T.O.
STRUCTURAL TIMBER - TREATED OR	
UNTREATED - EXTREME FIBER STRESS	1,800 LBS. PER SQ. IN.
COMPRESSION PERPENDICULAR TO GRAIN OF TIMBER	375 LBS. PER SQ. IN.
EQUIVALENT FLUID PRESSURE OF EARTH	30 LBS. PER CU. FT. (MINIMUM)

MATERIAL AND WORKMANSHIP:

EXCEPT AS MAY OTHERWISE BE SPECIFIED ON PLANS OR IN THE SPECIAL PROVISIONS, ALL MATERIAL AND WORKMANSHIP SHALL BE IN ACCORDANCE WITH THE 2012 "STANDARD SPECIFICATIONS FOR ROADS AND STRUCTURES" OF THE N. C. DEPARTMENT OF TRANSPORTATION.

STEEL SHEET PILING FOR PERMANENT OR TEMPORARY APPLICATIONS SHALL BE HOT ROLLED.

CONCRETE:

UNLESS OTHERWISE REQUIRED ON PLANS, CLASS A CONCRETE SHALL BE USED FOR ALL PORTIONS OF ALL STRUCTURES WITH THE EXCEPTION THAT: CLASS AA CONCRETE SHALL BE USED IN BRIDGE SUPERSTRUCTURES, ABUTMENT BACKWALLS, AND APPROACH SLABS; AND CLASS B CONCRETE SHALL BE USED FOR SLOPE PROTECTION AND RIP RAP.

CONCRETE CHAMFERS:

UNLESS OTHERWISE NOTED ON THE PLANS, ALL EXPOSED CORNERS ON STRUCTURES SHALL BE CHAMFERED 3/4" WITH THE FOLLOWING EXCEPTIONS: TOP CORNERS OF CURBS MAY BE ROUNDED TO 1-1/2" RADIUS WHICH IS BUILT INTO CURB FORMS; CORNERS OF TRANSVERSE FLOOR EXPANSION JOINTS SHALL BE ROUNDED WITH A 1/4" FINISHING TOOL UNLESS OTHERWISE REQUIRED ON PLANS; AND CORNERS OF EXPANSION JOINTS IN THE ROADWAY FACES AND TOPS OF CURBS AND SIDEWALKS SHALL BE ROUNDED TO A 1/4" RADIUS WITH A FINISHING STONE OR TOOL UNLESS OTHERWISE REQUIRED ON PLANS.

DOWELS:

DOWELS WHEN INDICATED ON PLANS AS FOR CULVERT EXTENSIONS, SHALL BE EMBEDDED AT LEAST 12" INTO THE OLD CONCRETE AND GROUTED INTO PLACE WITH 1:2 CEMENT MORTAR.

ALLOWANCE FOR DEAD LOAD DEFLECTION, SETTLEMENT, ETC. IN CASTING SUPERSTRUCTURES:

BRIDGES SHALL BE BUILT ON THE GRADE OR VERTICAL CURVE SHOWN ON PLANS. SLABS, CURBS AND PARAPETS SHALL CONFORM TO THE GRADE OR CURVE.

ALL DIMENSIONS WHICH ARE GIVEN IN SECTION AND ARE AFFECTED BY DEAD LOAD DEFLECTIONS ARE DIMENSIONS AT CENTER LINE OF BEARING UNLESS OTHERWISE NOTED ON PLANS. IN SETTING FORMS FOR STEEL BEAM BRIDGES AND PRESTRESSED CONCRETE GIRDER BRIDGES, ADJUSTMENTS SHALL BE MADE DUE TO THE DEAD LOAD DEFLECTIONS FOR THE ELEVATIONS SHOWN. WHERE BLOCKS ARE SHOWN OVER BEAMS FOR BUILDING UP TO THE SLAB, THE VERTICAL DIMENSIONS OF THE BLOCKS SHALL BE ADJUSTED BETWEEN BEARINGS TO COMPENSATE FOR DEAD LOAD DEFLECTIONS, VERTICAL CURVE ORDINATE, AND ACTUAL BEAM CAMBER. WHERE BOTTOM OF SLAB IS IN LINE WITH BOTTOM OF TOP FLANGES, DEPTH OF SLAB BETWEEN BEARINGS SHALL BE ADJUSTED TO COMPENSATE FOR DEAD LOAD DEFLECTION, VERTICAL CURVE ORDINATE, AND ACTUAL BEAM CAMBER.

IN SETTING FALSEWORK AND FORMS FOR REINFORCED CONCRETE SPANS, AN ALLOWANCE SHALL BE MADE FOR DEAD LOAD DEFLECTIONS, SETTLEMENT OF FALSEWORK, AND PERMANENT CAMBER WHICH SHALL BE PROVIDED FOR IN ADDITION TO THE ELEVATIONS SHOWN. AFTER REMOVAL OF THE FALSEWORK, THE FINISHED STRUCTURES SHALL CONFORM TO THE PROFILE AND ELEVATIONS SHOWN ON THE PLANS AND CONSTRUCTION ELEVATIONS FURNISHED BY THE ENGINEER.

DETAILED DRAWINGS FOR FALSEWORK OR FORMS FOR BRIDGE SUPERSTRUCTURE AND ANY STRUCTURE OR PARTS OF A STRUCTURE AS NOTED ON THE PLANS SHALL BE SUBMITTED TO THE ENGINEER FOR APPROVAL BEFORE CONSTRUCTION OF THE FALSEWORK OR FORMS IS STARTED.

REINFORCING STEEL:

ALL REINFORCING STEEL SHALL BE DEFORMED. DIMENSIONS RELATIVE TO PLACEMENT OF REINFORCING ARE TO CENTERS OF BARS UNLESS OTHERWISE INDICATED IN THE PLANS. DIMENSIONS ON BAR DETAILS ARE TO CENTERS OF BARS OR ARE OUT TO OUT AS INDICATED ON PLANS.

WIRE BAR SUPPORTS SHALL BE PROVIDED FOR REINFORCING STEEL WHERE INDICATED ON THE PLANS. WHEN BAR SUPPORT PIECES ARE PLACED IN CONTINUOUS LINES, THEY SHALL BE SO PLACED THAT THE ENDS OF THE SUPPORTING WIRES SHALL BE LAPPED TO LOCK LEGS ON ADJOINING PIECES.

STRUCTURAL STEEL:

AT THE CONTRACTOR'S OPTION, HE MAY SUBSTITUTE 7/8" Ø SHEAR STUDS FOR THE 3/4" Ø STUDS SPECIFIED ON THE PLANS. THIS SUBSTITUTION SHALL BE MADE AT THE RATE OF 3 - 7/8" Ø STUDS FOR 4 - 3/4" Ø STUDS, AND STUD SPACING CHANGES SHALL BE MADE AS NECESSARY TO PROVIDE THE SAME EQUIVALENT NUMBER OF 7/8" Ø STUDS ALONG THE BEAM AS SHOWN FOR 3/4" Ø STUDS BASED ON THE RATIO OF 3 - 7/8" Ø STUDS FOR 4 - 3/4" Ø STUDS. STUDS OF THE LENGTH SPECIFIED ON THE PLANS MUST BE PROVIDED. THE MAXIMUM SPACING SHALL BE 2'-0".

EXCEPT AT THE INTERIOR SUPPORTS OF CONTINUOUS BEAMS WHERE THE COVER PLATE IS IN CONTACT WITH BEARING PLATE, THE CONTRACTOR MAY, AT HIS OPTION, SUBSTITUTE FOR THE COVER PLATES DESIGNATED ON THE PLANS COVER PLATES OF THE EQUIVALENT AREA PROVIDED THESE PLATES ARE AT LEAST 5/16" IN THICKNESS AND DO NOT EXCEED A WIDTH EQUAL TO THE FLANGE WIDTH LESS 2" OR A THICKNESS EQUAL TO 2 TIMES THE FLANGE THICKNESS. THE SIZE OF FILLET WELDS SHALL CONFORM TO THE REQUIREMENTS OF THE CURRENT ANSI/AASHTO/AWS "BRIDGE WELDING CODE". ELECTROSLAG WELDING WILL NOT BE PERMITTED.

WITH THE SOLE EXCEPTION OF EDGES AT SURFACES WHICH BEAR ON OTHER SURFACES, ALL SHARP EDGES AND ENDS OF SHAPES AND PLATES SHALL BE SLIGHTLY ROUNDED BY SUITABLE MEANS TO A RADIUS OF APPROXIMATELY 1/16 INCH OR EQUIVALENT FLAT SURFACE AT A SUITABLE ANGLE PRIOR TO PAINTING, GALVANIZING, OR METALLIZING.

HANDRAILS AND POSTS:

METAL STANDARDS AND FACES OF THE CONCRETE END POSTS FOR THE METAL RAIL SHALL BE SET NORMAL TO THE GRADE OF THE CURB, UNLESS OTHERWISE SHOWN ON PLANS. THE METAL RAIL AND TOPS OF CONCRETE POSTS USED WITH THE ALUMINUM RAIL SHALL BE BUILT PARALLEL TO THE GRADE OF THE CURB.

METAL HANDRAILS SHALL BE IN ACCORDANCE WITH THE PLANS. RAILS SHALL BE AS MANUFACTURED FOR BRIDGE RAILING. CASTINGS SHALL BE OF A UNIFORM APPEARANCE. FINS AND OTHER DEFORMATIONS RESULTING FROM CASTING OR OTHERWISE SHALL BE REMOVED IN A MANNER SO THAT A UNIFORM COLORING OF THE COMPLETED CASTING SHALL BE OBTAINED. CASTINGS WITH DISCOLORATIONS OR OF NON-UNIFORM COLORING WILL NOT BE ACCEPTED. CERTIFIED MILL REPORTS ARE REQUIRED FOR METAL RAILS AND POSTS.

SPECIAL NOTES:

GENERALLY, IN CASE OF DISCREPANCY, THIS STANDARD SHEET OF NOTES SHALL GOVERN OVER THE SPECIFICATIONS, BUT THE REMAINDER OF THE PLANS SHALL GOVERN OVER NOTES HEREON, AND SPECIAL PROVISIONS SHALL GOVERN OVER ALL. SEE SPECIFICATIONS ARTICLE 105-4.

ENGLISH

JANUARY, 1990