N.T.S.

PROJECT REFERENCE NO.	SHEET NO.
38197	2
R/W SHEET NO.	
ROADWAY DESIGN ENGINEER	HYDRAULICS ENGINEER

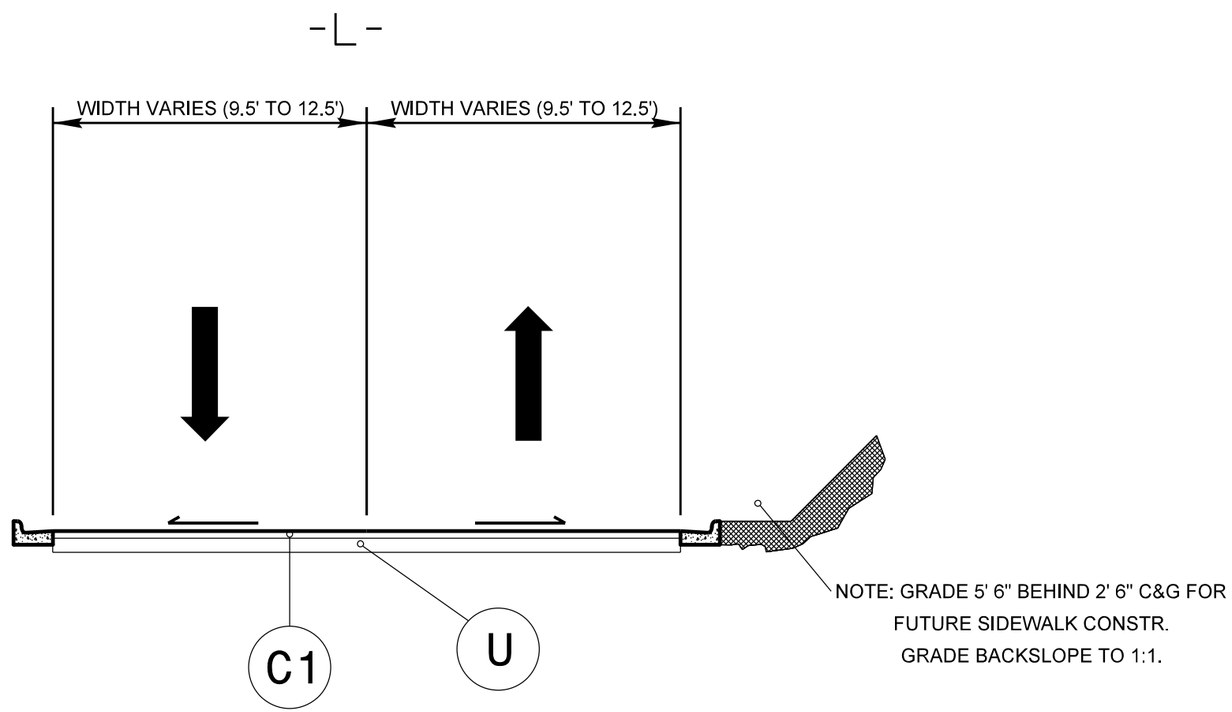

NOTE: ALL PLACING OF ASPHALT CONCRETE SURFACECOURSE SHOULD BE MATCHED TO EXISTING GRADE

TYPICAL SECTION No. 1

-L- STA 10+00.00 TO -L- STA 24+49.00

PAVEMENT SCHEDULE

ITEM	DESCRIPTION
C1	PROP. APPROX. 1 1/2" ASPHALT CONCRETE SURFACE COURSE, TYPE S9.5B, AT AN AVERAGE RATE OF 165 LBS. PER SQ. YD. IN ONE SINGLE LIFT.
U	EXISTING ASPHALT PAVEMENT

REVISIONS

8/17/99

$$$$$$SYSTIME$$$$$
$$$$$$$$$$$$$$$$$$$$$$$$$$$