09/08/99

WBS ELEMENT: 44337.3.1

CONTRACT: DN00364

See Sheet 1-A For Index of Sheets

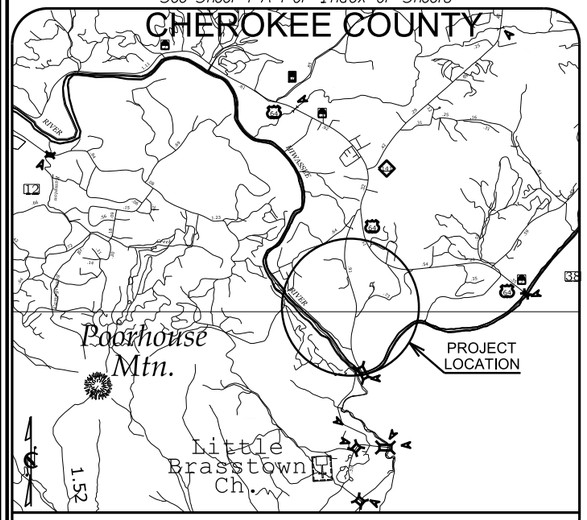

VICINITY MAP

STATE OF NORTH CAROLINA
DIVISION OF HIGHWAYS

CHEROKEE COUNTY

LOCATION: ALONG SR-1548 OLD HIGHWAY 64

TYPE OF WORK: GUARDRAIL INSTALLATION

STATE	STATE PROJECT REFERENCE NO.	SHEET NO.	TOTAL SHEETS
N.C.	44337.3.1	1	

STATE PROJ. NO.	F.A. PROJ. NO.	DESCRIPTION

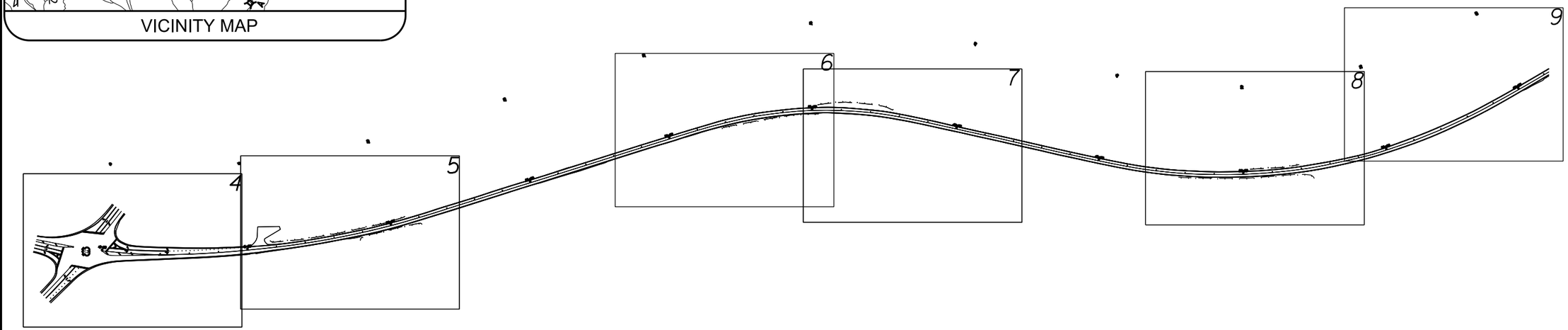

GRAPHIC SCALES

0
PLANS

0
PROFILE (HORIZONTAL)

0
PROFILE (VERTICAL)

PROJECT LENGTH

1.02 MILES

Prepared In the Office of:
DIVISION OF HIGHWAYS
191 Robbinsville Rd., Andrews NC, 28901

2012 STANDARD SPECIFICATIONS

RIGHT OF WAY DATE:

LETTING DATE:

WESLEY GRINDSTAFF P.E.
PROJECT ENGINEER

ALAN R BROWN
PROJECT DESIGN ENGINEER

HYDRAULICS ENGINEER

SIGNATURE: P.E.

ROADWAY DESIGN ENGINEER

SIGNATURE: P.E.

STATE OF NORTH CAROLINA • DEPARTMENT OF TRANSPORTATION •

15-APR-2015 10:38
S:\Dist3\Macon\DN00364_tensentee old 64 brasstown guardrail\TESNETEE GR_Rdy_dsn.dgn
arbrown4 AT DI4CAD272166