PROJECT: 17BP.14.R.10

CONTRACT: DN00143

See Sheet 1A For Index of Sheets
See Sheet 1B For Conventional Symbols

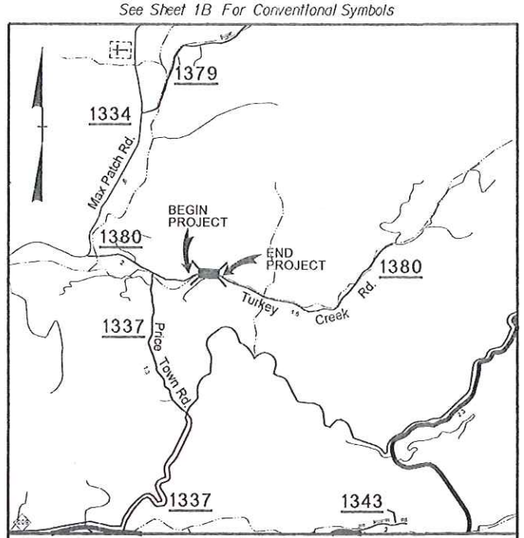

VICINITY MAP NTS

FINAL PLANS

STATE OF NORTH CAROLINA
DIVISION OF HIGHWAYS

HAYWOOD COUNTY

STATE	STATE PROJECT REFERENCE NO.	SHEET NO.	TOTAL SHEETS
N.C.	17BP.14.R.10	1	

STATE PROJ. NO.	F.A. PROJ. NO.	DESCRIPTION
17BP.14.R.10		

LOCATION: BRIDGE NO. 216 ON SR 1380 OVER TURKEY CREEK

TYPE OF WORK: GRADING, PAVING, DRAINAGE, SIGNING, AND STRUCTURE

4

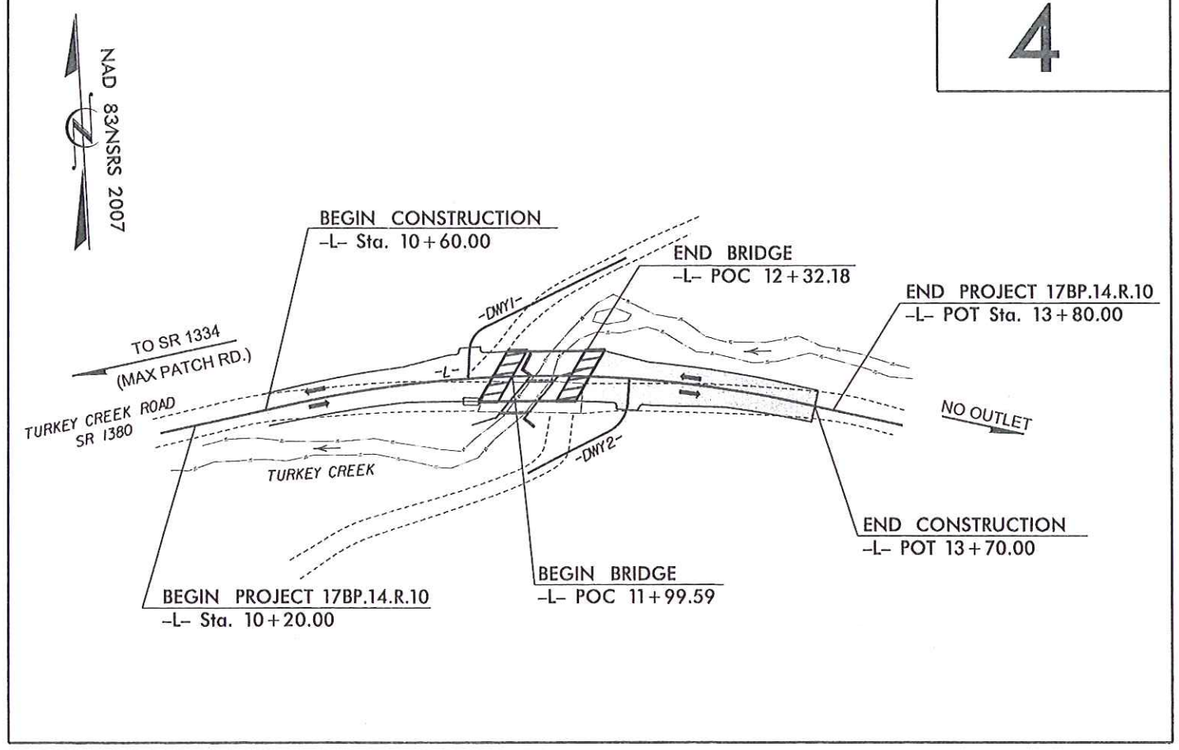

NCDOT CONTACT:
JOSH DEYTON, PE
HIGHWAY DIVISION 14
BRIDGE MANAGER
828-488-0902

GRAPHIC SCALES

20 10 0 20 40
PLANS

20 10 0 20 40
PROFILE (HORIZONTAL)

4 2 0 4 8
PROFILE (VERTICAL)

DESIGN DATA

ADT 2007 = 390
ADT =
DHV = %
D = %
T = % *
V = 35 MPH
* TTST = DUAL
FUNC CLASS = LOCAL
SUBREGIONAL TIER

PROJECT LENGTH

LENGTH ROADWAY PROJECT	=	0.062 MILES
LENGTH STRUCTURES PROJECT	=	0.006 MILES
TOTAL LENGTH PROJECT	=	0.068 MILES

Prepared In the Office of:
THE LOUIS BERGER GROUP, Inc.
1001 Wade Avenue, Suite 400
Raleigh, North Carolina 27605
License No.: F-0840

2012 STANDARD SPECIFICATIONS

RIGHT OF WAY DATE:
MAY 2, 2012

LETTING DATE:
JUNE 25, 2013

DEAN HATFIELD, PE
PROJECT ENGINEER

WILLIAM TILLITT, PE
PROJECT DESIGN ENGINEER

HYDRAULICS ENGINEER
SIGNATURE: Lara Starnell P.E. 6/3/13
NORTH CAROLINA PROFESSIONAL SEAL 27876 ENGINEER LARA STARNELL

ROADWAY DESIGN ENGINEER
SIGNATURE: Dean Hatfield P.E. 6/3/13
NORTH CAROLINA PROFESSIONAL SEAL 16003 ENGINEER DEAN C. HATFIELD

DIVISION OF HIGHWAYS
STATE OF NORTH CAROLINA
STATE OF NORTH CAROLINA DEPARTMENT OF TRANSPORTATION
P.E.
STATE HIGHWAY DESIGN ENGINEER

6/3/2013 2:26:17 PM
G:\OR Projects\OR1100 - NCDOT Group W\430216\Roadway\Proj\430216_RDY_00_TSH.dgn
G:\CADD\Plot\OR1100\1100_rdy.tbl

PROJECT REFERENCE NO.	SHEET NO.
17BPJ4RJ0	1A

ROADWAY DESIGN ENGINEER

NORTH CAROLINA PROFESSIONAL SEAL 16003 ENGINEER

REGISTERED ENGINEER
5/23/2013

STATE OF NORTH CAROLINA
DIVISION OF HIGHWAYS

INDEX OF SHEETS

INDEX OF SHEETS

SHEET NUMBER	SHEET
1	TITLE SHEET
1-A	INDEX OF SHEETS, GENERAL NOTES, AND LIST OF STANDARD DRAWINGS
1-B	CONVENTIONAL SYMBOLS
1-C	SURVEY CONTROL
2	PAVEMENT SCHEDULE & TYPICAL SECTIONS
2-A THRU 2-B	RETAINING WALL DETAILS
3	SUMMARY OF QUANTITIES
3A	SUMMARIES OF EARTHWORK, GUARDRAIL & SUMMARY OF DRAINAGE QUANTITIES
4	PLAN SHEET
5	PROFILE SHEET
TMP-1 THRU TMP-4	TRAFFIC CONTROL PLANS
PMP-1 THRU PMP-2	PAVEMENT MARKING PLANS
EC-1 THRU EC-3	EROSION CONTROL PLANS
X-1 THRU X-11	CROSS-SECTIONS
S-1 THRU S-20	STRUCTURE PLANS

GENERAL NOTES

GENERAL NOTES: 2012 SPECIFICATIONS
EFFECTIVE: 01-17-12
REVISED: 11/01/11

GRADING AND SURFACING OR RESURFACING AND WIDENING:

THE GRADE LINES SHOWN DENOTE THE FINISHED ELEVATION OF THE PROPOSED SURFACING AT GRADE POINTS SHOWN ON THE TYPICAL SECTIONS. WHERE NO GRADE LINES ARE SHOWN, THE PROFILES SHOWN DENOTE THE TOP ELEVATION OF THE EXISTING PAVEMENT ALONG THE CENTER LINE OF SURVEY ON WHICH THE PROPOSED RESURFACING WILL BE PLACED. GRADE LINES MAY BE ADJUSTED BY THE ENGINEER IN ORDER TO SECURE A PROPER TIE-IN.

CLEARING:

CLEARING ON THIS PROJECT SHALL BE PERFORMED TO THE LIMITS ESTABLISHED BY METHOD II.

SUPERELEVATION:

ALL CURVES ON THIS PROJECT SHALL BE SUPERELEVATED IN ACCORDANCE WITH STD. NO. 225.04 USING THE RATE OF SUPERELEVATION AND RUNOFF SHOWN ON THE PLANS. SUPERELEVATION IS TO BE REVOLVED ABOUT THE GRADE POINTS SHOWN ON THE TYPICAL SECTIONS.

SHOULDER CONSTRUCTION:

ASPHALT, EARTH, AND CONCRETE SHOULDER CONSTRUCTION ON THE HIGH SIDE OF SUPERELEVATED CURVES SHALL BE IN ACCORDANCE WITH STD. NO. 560.01.

SIDE ROADS:

THE CONTRACTOR WILL BE REQUIRED TO DO ALL NECESSARY WORK TO PROVIDE SUITABLE CONNECTIONS WITH ALL ROADS, STREETS, AND DRIVES ENTERING THIS PROJECT. THIS WORK WILL BE PAID FOR AT THE CONTRACT UNIT PRICE FOR THE PARTICULAR ITEMS INVOLVED.

GUARDRAIL:

THE GUARDRAIL LOCATIONS SHOWN ON THE PLANS MAY BE ADJUSTED DURING CONSTRUCTION AS DIRECTED BY THE ENGINEER. THE CONTRACTOR SHOULD CONSULT WITH THE ENGINEER PRIOR TO ORDERING GUARDRAIL MATERIAL.

TEMPORARY SHORING:

SHORING REQUIRED FOR THE MAINTENANCE OF TRAFFIC NOT SHOWN ON THE PLANS WILL BE PAID FOR AT THE CONTRACT PRICE FOR "TEMPORARY SHORING".

END BENTS:

THE ENGINEER SHALL CHECK THE STRUCTURE END BENT PLANS, DETAILS, AND CROSS-SECTION PRIOR TO SETTING OF THE SLOPE STAKES FOR THE EMBANKMENT OR EXCAVATION APPROACHING A BRIDGE.

UTILITIES:

UTILITY OWNERS ON THIS PROJECT ARE

HAYWOOD ELECTRIC MEMBERSHIP CORP. AND AT&T COMMUNICATION

ANY RELOCATION OF EXISTING UTILITIES WILL BE ACCOMPLISHED BY OTHERS.

RIGHT-OF-WAY MARKERS:

ALL RIGHT-OF-WAY MARKERS ON THIS PROJECT SHALL BE PLACED BY CONTRACT.

ROADWAY ENGLISH STANDARD DRAWINGS

2012 ROADWAY ENGLISH STANDARD DRAWINGS

The following Roadway Standards as appear in "Roadway Standard Drawings" Highway Design Branch - N. C. Department of Transportation - Raleigh, N. C., Dated January, 2012 are applicable to this project and by reference hereby are considered a part of these plans:

STD.NO.	TITLE
DIVISION 2 - EARTHWORK	
200.02	Method of Clearing - Method II
225.02	Guide for Grading Subgrade - Secondary and Local
225.04	Method of Obtaining Superelevation - Two Lane Pavement
DIVISION 3 - PIPE CULVERTS	
300.01	Method of Pipe Installation
310.10	Driveway Pipe Construction
DIVISION 4 - MAJOR STRUCTURES	
422.11	Reinforced Bridge Approach Fills - Sub Regional Tier
DIVISION 5 - SUBGRADE, BASES AND SHOULDERS	
560.01	Method of Shoulder Construction - High Side of Superelevated Curve - Method I
DIVISION 8 - INCIDENTALS	
840.14	Concrete Drop Inlet - 12" thru 30" Pipe
840.15	Brick Drop Inlet - 12" thru 30" Pipe
840.16	Drop Inlet Frame and Grates - for use with Std. Dwg 840.14 and 840.15
840.35	Traffic Bearing Grated Drop Inlet - for Cast Iron Double Frame and Grates
846.04	Drop Inlet Installation in Shoulder Berm Gutter
862.01	Guardrail Placement
862.02	Guardrail Installation
862.03	Structure Anchor Units
876.02	Guide for Rip Rap at Pipe Outlets
876.04	Drainage Ditches with Class 'B' Rip Rap

5/23/2013 10:51:50 AM
G:\OR Projects\OR1100 - NCDOT Group W\430216\Roadway\Proj\430216_RDY_01_1A.dgn
G:\CADD\Plot\OR1100\1100_rdy.tbl

PROJECT REFERENCE NO.	SHEET NO.
17BP.14.R.10	1B

Note: Not to Scale

**S.U.E. = Subsurface Utility Engineering*

STATE OF NORTH CAROLINA
DIVISION OF HIGHWAYS

CONVENTIONAL PLAN SHEET SYMBOLS

BOUNDARIES AND PROPERTY:

- State Line
- County Line
- Township Line
- City Line
- Reservation Line
- Property Line
- Existing Iron Pin — EIP
- Property Corner
- Property Monument — ECM
- Parcel/Sequence Number — 123
- Existing Fence Line
- Proposed Woven Wire Fence
- Proposed Chain Link Fence
- Proposed Barbed Wire Fence
- Existing Wetland Boundary — WLB
- Proposed Wetland Boundary — WLB
- Existing Endangered Animal Boundary — EAB
- Existing Endangered Plant Boundary — EPB
- Known Soil Contamination: Area or Site
- Potential Soil Contamination: Area or Site

BUILDINGS AND OTHER CULTURE:

- Gas Pump Vent or U/G Tank Cap
- Sign
- Well
- Small Mine
- Foundation
- Area Outline
- Cemetery
- Building
- School
- Church
- Dam

HYDROLOGY:

- Stream or Body of Water
- Hydro, Pool or Reservoir
- Jurisdictional Stream — JS
- Buffer Zone 1 — BZ 1
- Buffer Zone 2 — BZ 2
- Flow Arrow
- Disappearing Stream
- Spring
- Wetland
- Proposed Lateral, Tail, Head Ditch — FLOW
- False Sump

RAILROADS:

- Standard Gauge — CSX TRANSPORTATION
- RR Signal Milepost — MILEPOST 35
- Switch — SWITCH
- RR Abandoned
- RR Dismantled

RIGHT OF WAY:

- Baseline Control Point
- Existing Right of Way Marker
- Existing Right of Way Line
- Proposed Right of Way Line — RW
- Proposed Right of Way Line with Iron Pin and Cap Marker — RW
- Proposed Right of Way Line with Concrete or Granite Marker — RW
- Existing Control of Access — CA
- Proposed Control of Access — CA
- Existing Easement Line — E
- Proposed Temporary Construction Easement — E
- Proposed Temporary Drainage Easement — TDE
- Proposed Permanent Drainage Easement — PDE
- Proposed Permanent Drainage / Utility Easement — DUE
- Proposed Permanent Utility Easement — PUE
- Proposed Temporary Utility Easement — TUE
- Proposed Aerial Utility Easement — AUE
- Proposed Permanent Easement with Iron Pin and Cap Marker

ROADS AND RELATED FEATURES:

- Existing Edge of Pavement
- Existing Curb
- Proposed Slope Stakes Cut — C
- Proposed Slope Stakes Fill — F
- Proposed Curb Ramp — CR
- Existing Metal Guardrail
- Proposed Guardrail
- Existing Cable Guiderail
- Proposed Cable Guiderail
- Equality Symbol
- Pavement Removal

VEGETATION:

- Single Tree
- Single Shrub
- Hedge
- Woods Line
- Orchard
- Vineyard — Vineyard

EXISTING STRUCTURES:

MAJOR:

- Bridge, Tunnel or Box Culvert — CONC
- Bridge Wing Wall, Head Wall and End Wall — CONC WW

MINOR:

- Head and End Wall — CONC HW
- Pipe Culvert
- Footbridge
- Drainage Box: Catch Basin, DI or JB — CB
- Paved Ditch Gutter
- Storm Sewer Manhole — S
- Storm Sewer — S

UTILITIES:

POWER:

- Existing Power Pole
- Proposed Power Pole
- Existing Joint Use Pole
- Proposed Joint Use Pole
- Power Manhole — P
- Power Line Tower
- Power Transformer
- U/G Power Cable Hand Hole
- H-Frame Pole
- Recorded U/G Power Line — P
- Designated U/G Power Line (S.U.E.*) — P

TELEPHONE:

- Existing Telephone Pole
- Proposed Telephone Pole
- Telephone Manhole — T
- Telephone Booth
- Telephone Pedestal — T
- Telephone Cell Tower
- U/G Telephone Cable Hand Hole — HH
- Recorded U/G Telephone Cable — T
- Designated U/G Telephone Cable (S.U.E.*) — T
- Recorded U/G Telephone Conduit — TC
- Designated U/G Telephone Conduit (S.U.E.*) — TC
- Recorded U/G Fiber Optics Cable — T FO
- Designated U/G Fiber Optics Cable (S.U.E.*) — T FO

WATER:

- Water Manhole — W
- Water Meter
- Water Valve
- Water Hydrant
- Recorded U/G Water Line — W
- Designated U/G Water Line (S.U.E.*) — W
- Above Ground Water Line — A/G Water

TV:

- TV Satellite Dish
- TV Pedestal — C
- TV Tower
- U/G TV Cable Hand Hole — HH
- Recorded U/G TV Cable — TV
- Designated U/G TV Cable (S.U.E.*) — TV
- Recorded U/G Fiber Optic Cable — TV FO
- Designated U/G Fiber Optic Cable (S.U.E.*) — TV FO

GAS:

- Gas Valve
- Gas Meter
- Recorded U/G Gas Line — G
- Designated U/G Gas Line (S.U.E.*) — G
- Above Ground Gas Line — A/G Gas

SANITARY SEWER:

- Sanitary Sewer Manhole
- Sanitary Sewer Cleanout
- U/G Sanitary Sewer Line — SS
- Above Ground Sanitary Sewer — A/G Sanitary Sewer
- Recorded SS Forced Main Line — FSS
- Designated SS Forced Main Line (S.U.E.*) — FSS

MISCELLANEOUS:

- Utility Pole
- Utility Pole with Base
- Utility Located Object
- Utility Traffic Signal Box — S
- Utility Unknown U/G Line — ?UTL
- U/G Tank; Water, Gas, Oil
- Underground Storage Tank, Approx. Loc. — UST
- A/G Tank; Water, Gas, Oil
- Geoenvironmental Boring
- U/G Test Hole (S.U.E.*)
- Abandoned According to Utility Records — AATUR
- End of Information — E.O.I.

04/16/11

5/3/2013 3:54:12 PM
G:\OR Projects\OR1100 - NCDOT Group W\430216\Roadway\Proj\430216_RDY_01_1B.dgn
G:\CADD\Plots\OR1100\1100_rdu.tb)

PROJECT REFERENCE NO.	SHEET NO.
17BP.14.R.10	1C
Location and Surveys	

SURVEY CONTROL SHEET 43-0216
-FINAL-

BL

POINT	DESC.	NORTH	EAST	ELEVATION	L STATION	OFFSET
1	BL-1	728986.4383	834412.7205	2684.20	10+03.55	19.70 LT
2	BL-2	728983.0499	834652.9523	2692.17	12+42.20	1.10 RT
3	BL-3	728943.0250	834864.7124	2699.47	OUTSIDE PROJECT LIMITS	

BM1 ELEVATION = 2687.22
N 729007 E 834479
BL STATION 5+66.00 22 LEFT
8 INCH SPIKE IN 42 INCH WALNUT TREE

BM2 ELEVATION = 2703.98
N 728891 E 834958
BL STATION 9+55.77
S 60°54'44.64" E DIST 107.03'
8 INCH SPIKE IN 24 INCH RED OAK TREE

-FINAL- ROW MARKER IRON PIN AND CAP-E

ALIGN	STATION	OFFSET	NORTH	EAST
L	10+20.00	-10.39	728979.8587	834430.4467
L	10+60.00	-25.00	729020.6441	834467.6142
L	10+76.13	-25.00	729003.2096	834483.5405
L	13+62.24	-25.00	728996.4144	834777.6858
L	13+80.00	-25.00	728981.6121	834794.7860
L	13+80.00	-10.67	728967.8158	834790.9115
L	13+80.00	9.35	728948.5414	834785.4986
L	13+80.00	25.00	728933.4743	834781.2672
L	13+62.24	25.00	728938.2767	834764.1670
L	12+80.00	25.00	728954.8746	834686.8567
L	12+80.00	30.00	728949.9301	834686.1135
L	11+40.00	30.00	728955.6799	834552.8515
L	10+20.00	9.62	728960.1034	834433.6290

FINAL -L-

TYPE	STATION	NORTH	EAST
POT	10+00.00	728966.4203	834412.3536
PC	10+76.13	728978.5277	834487.5163
PT	13+62.24	728962.3455	834770.9264
POT	14+26.72	728944.9125	834833.0021

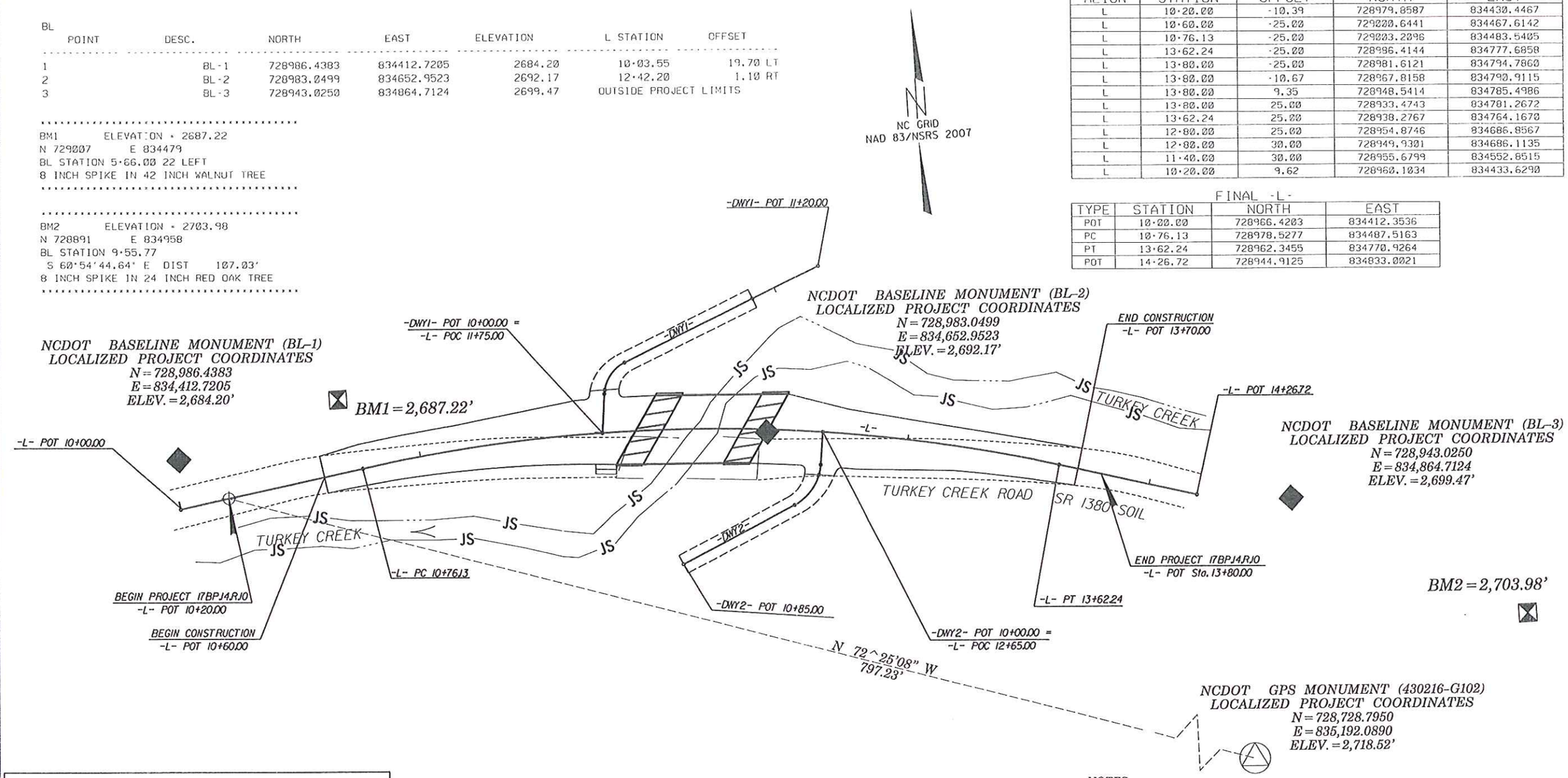

DATUM DESCRIPTION

THE LOCALIZED COORDINATE SYSTEM DEVELOPED FOR THIS PROJECT IS BASED ON THE STATE PLANE COORDINATES ESTABLISHED BY NCDOT FOR MONUMENT "430216-G102"
WITH NAD 83/NSRS 2007 STATE PLANE GRID COORDINATES OF
NORTHING: 728728.795(ft) EASTING: 835192.089(ft)
ELEVATION: 2718.52(ft)
THE AVERAGE COMBINED GRID FACTOR USED ON THIS PROJECT (GROUND TO GRID) IS: 0.999776017
THE N.C. LAMBERT GRID BEARING AND LOCALIZED HORIZONTAL GROUND DISTANCE FROM "430216-G102" TO -L- STATION 10+20.00 IS
N 72°25'08" W 797.23'
ALL LINEAR DIMENSIONS ARE LOCALIZED HORIZONTAL DISTANCES
VERTICAL DATUM USED IS NAVD 88

GEOID MODEL - G09NC
NOTE: DRAWING NOT TO SCALE

NOTES:

1. THE CONTROL DATA FOR THIS PROJECT CAN BE FOUND ELECTRONICALLY BY SELECTING PROJECT CONTROL DATA AT:
HTTPS://CONNECT.NCDOT.GOV/RESOURCES/LOCATION/

THE FILES TO BE FOUND ARE AS FOLLOWS:
430216_LS_CONTROL.TXT

SITE CALIBRATION INFORMATION HAS NOT BEEN PROVIDED FOR THIS PROJECT. IF FURTHER INFORMATION IS NEEDED, PLEASE CONTACT THE LOCATION AND SURVEYS UNIT.

INDICATES GEODETIC CONTROL MONUMENTS USED OR SET FOR HORIZONTAL PROJECT CONTROL BY THE NCDOT LOCATION AND SURVEYS UNIT.
PROJECT CONTROL ESTABLISHED USING GLOBAL POSITIONING SYSTEM.

6/2/99

N.T.S

PROJECT REFERENCE NO.	SHEET NO.
17BP.14.R.10	2
R/W SHEET NO.	
ROADWAY DESIGN ENGINEER	PAVEMENT DESIGN ENGINEER

NORTH CAROLINA PROFESSIONAL SEAL 16002 ENGINEER DAVID H. HAIRFIELD
REGISTERED ENGINEER
5/3/2013

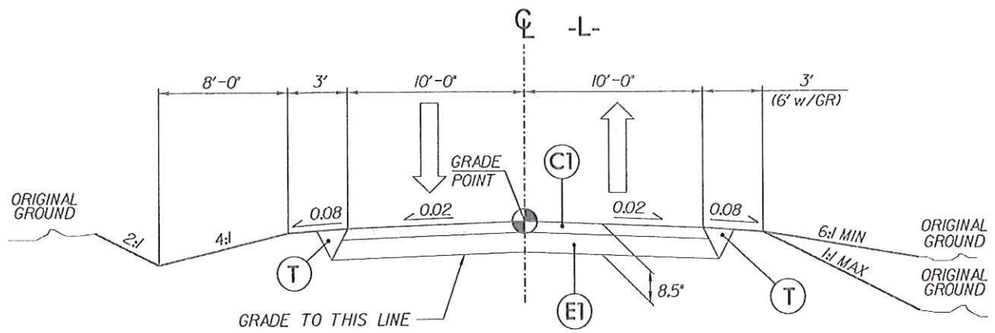

TYPICAL SECTION

-L- STA 10+60.00 TO -L- STA 11+99.59 (BEGIN BRIDGE)
-L- STA 12+32.18 (END BRIDGE) TO -L- STA 13+70.00

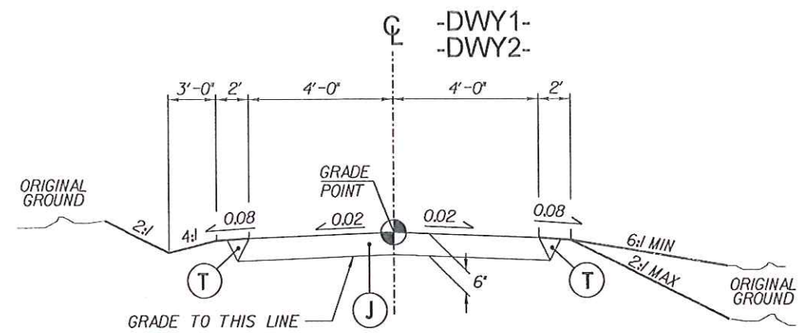

TYPICAL SECTION No. 2

-DWY1- STA 10+17.50 TO -DWY1- STA 10+90.00
-DWY2- STA 10+17.50 TO -DWY2- STA 10+85.00

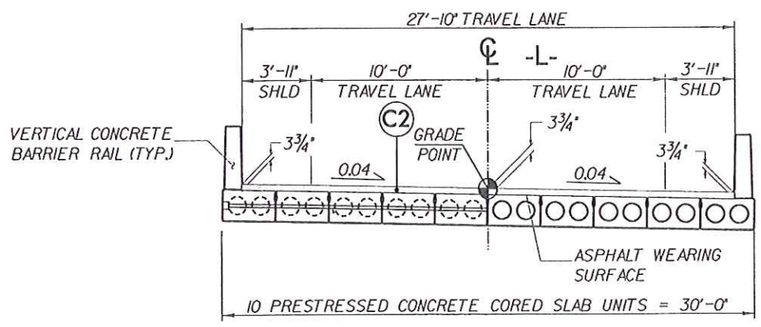

TYPICAL SECTION ON STRUCTURE

-L- STA 11+99.59 (BEGIN BRIDGE) TO -L- STA 12+32.18 (END BRIDGE)

Note: Pavement edge slopes are 1:1 unless shown otherwise.

PAVEMENT SCHEDULE	
ITEM	DESCRIPTION
C1	Prop. Approx 3.0" Asphalt Concrete Surface Course, Type S9.5B, at an Average Rate of 168 lbs. Per sq. yard in each of two layers.
C2	Prop. Var. Depth Asphalt Concrete Surface Course, Type S9.5B, at an Average Rate of 112 lbs. Per sq. yard Per 1" Depth, to be placed in layers not less than 1.5" or greater than 2" in depth.
E1	Prop. Approx 5.5" Asphalt Concrete Base Course, Type B25.0B, at an Average Rate of 627 lbs. Per sq. yard.
J	6" ABC
T	Earth Material

REVISIONS

5/3/2013 3:54:14 PM
G:\DR Projects\DR1100 - NCDOT Group W\430216\Roadway\Proj\430216_RDY_02_TYP.dgn
G:\CADD\Plot\DR1100\1102_rdy.tbl

PROJECT REFERENCE NO.	SHEET NO.
17BP.14.R.10	2A
R/W SHEET NO.	
ROADWAY DESIGN ENGINEER	PAVEMENT DESIGN ENGINEER

NORTH CAROLINA PROFESSIONAL SEAL 19003 ENGINEER
REGISTERED ENGINEER
5/3/2013

N.T.S

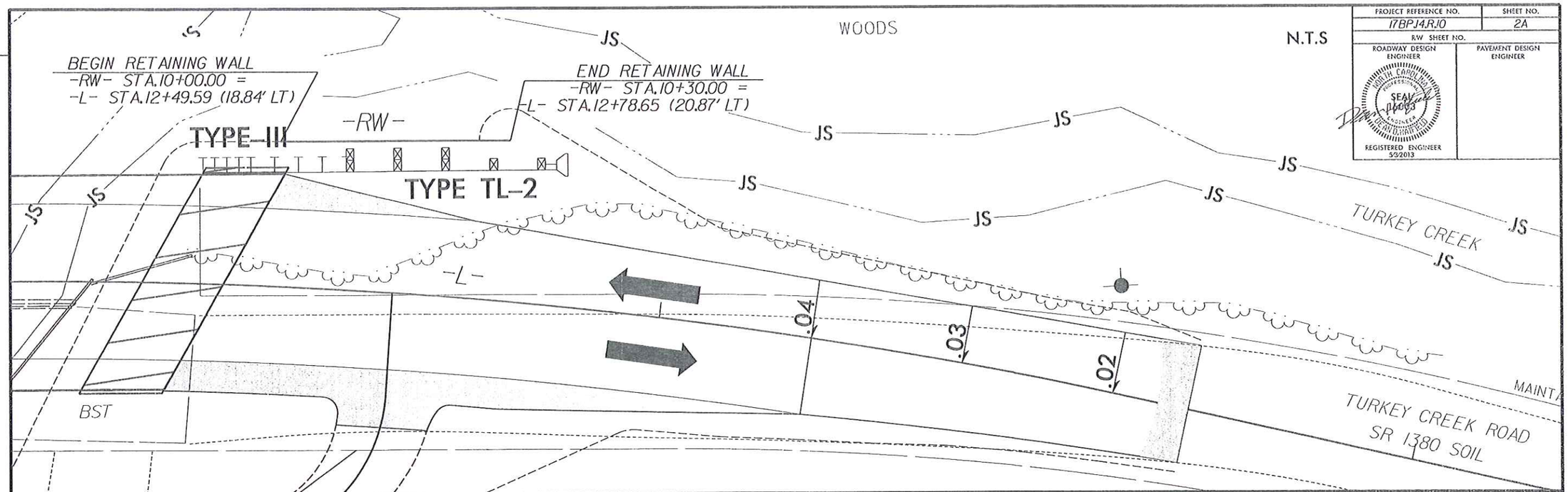

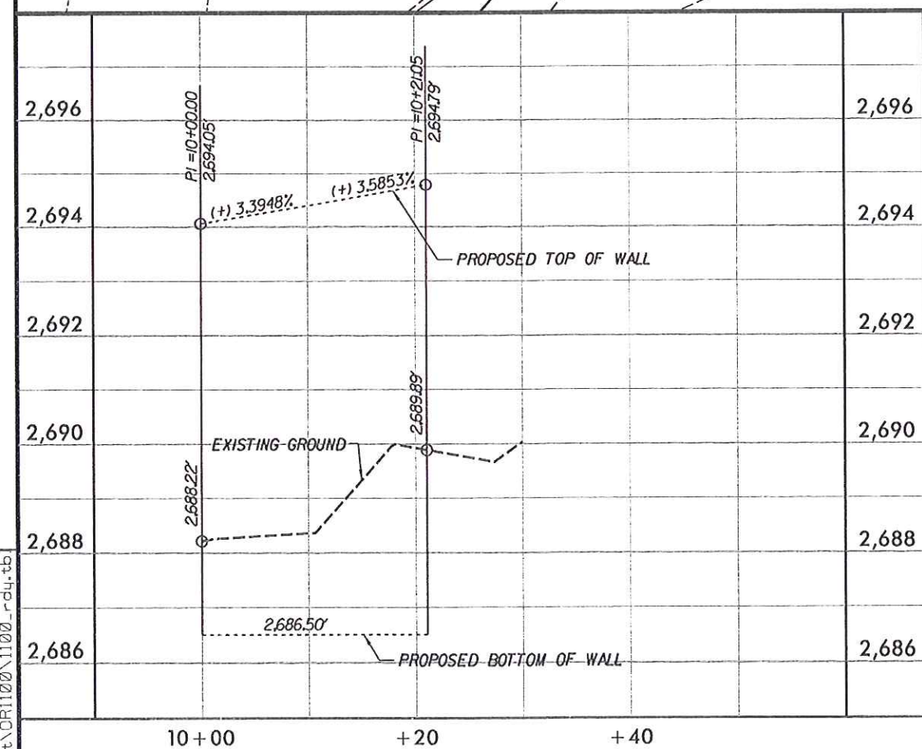

WALL ENVELOPE

PROPOSED WALL ENVELOPE IS AN ESTIMATE. ACTUAL FIELD INSTALLATION LIMITS MAY VARY DUE TO VARIATIONS IN INSTALLATION AS DIRECTED BY THE ENGINEER.

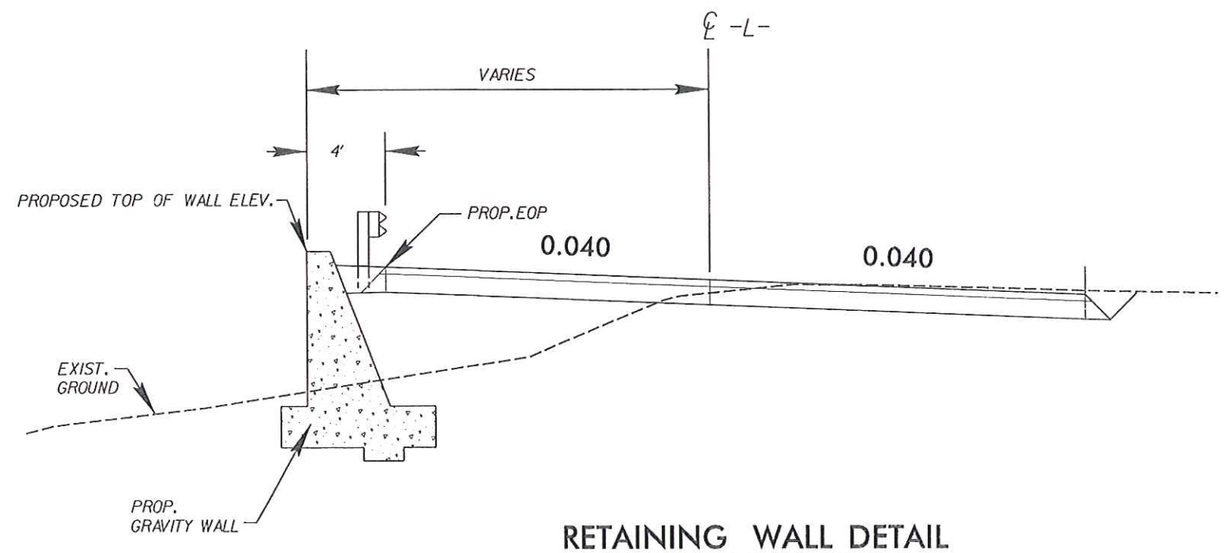

RETAINING WALL DETAIL

-RW- STA 10+00 TO 10+30.00

REVISIONS

5/3/2013 5:54:16 PM
G:\DR Projects\DR1100 - NCDOT Group W\430216\Roadway\Proj\430216_RDY_02A_WALL.dgn
G:\CADD\Plot\DR1100\1100_rd4.tb

NTS

PROJECT REFERENCE NO.	SHEET NO.
17BP.14.R.10	2B
R/W SHEET NO.	

ROADWAY DESIGN ENGINEER
NORTH CAROLINA PROFESSIONAL SEAL 19003 ENGINEER DAVID L. HAYFIELD
5/3/2013
REGISTERED ENGINEER

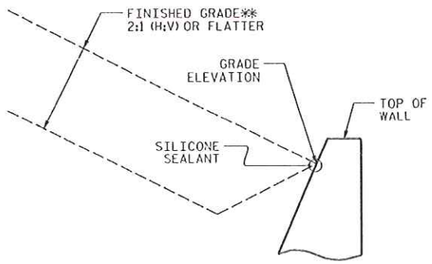

SLOPE CASE

**SEE ROADWAY PLANS FOR FINISHED GRADE AND DITCH DETAILS.

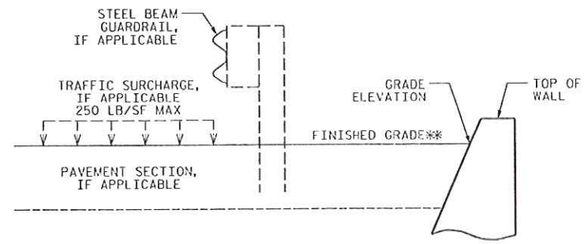

NO SLOPE CASE

**SEE ROADWAY PLANS FOR FINISHED GRADE DETAILS.

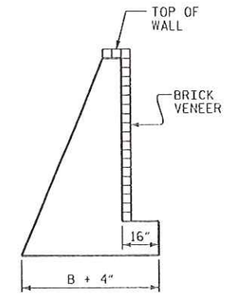

BRICK VENEER DETAIL

(WHEN APPLICABLE)

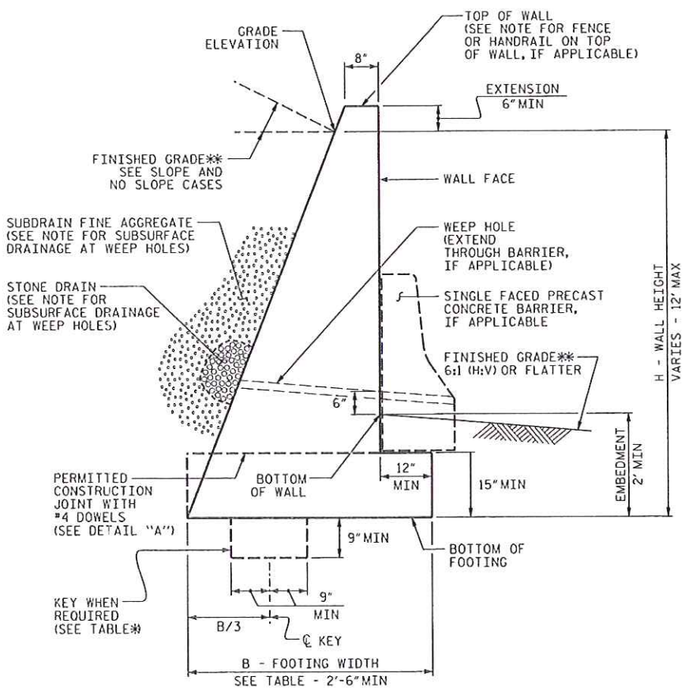

STANDARD CIP GRAVITY WALL

**SEE ROADWAY PLANS FOR FINISHED GRADE AND DITCH DETAILS.

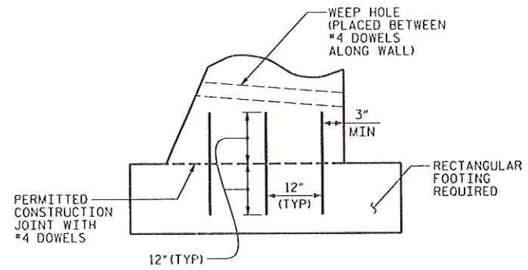

DETAIL "A"

H (FT)	3 - < 6	6 - 9	> 9 - 12
SLOPE CASE	.66	.70*	.75*
NO SLOPE CASE WITH TRAFFIC SURCHARGE	.80	.75*	.70*
NO SLOPE CASE WITHOUT TRAFFIC SURCHARGE	.60	.60	.60

B/H RATIO (B = 2'-6" MIN)

*KEY IS REQUIRED FOR "SLOPE CASE" OR "NO SLOPE CASE WITH TRAFFIC SURCHARGE" WHEN H IS 6' OR GREATER.

NOTES:

FOR STANDARD CAST-IN-PLACE (CIP) GRAVITY RETAINING WALLS, SEE CAST-IN-PLACE GRAVITY RETAINING WALLS PROVISION.

FOR STEEL BEAM GUARDRAIL, SEE ROADWAY PLANS AND SECTION 862 OF THE STANDARD SPECIFICATIONS.

FOR SINGLE FACED PRECAST CONCRETE BARRIER, SEE ROADWAY PLANS AND SECTION 857 OF THE STANDARD SPECIFICATIONS.

FOR FENCES OR HANDRAILS ON TOP OF WALLS, SEE ROADWAY PLANS FOR FENCE OR HANDRAIL ATTACHMENT DETAILS.

FOR SUBSURFACE DRAINAGE AT WEEP HOLES, SEE ARTICLE 414-8 OF THE STANDARD SPECIFICATIONS.

STANDARD CIP GRAVITY WALLS ARE BASED ON THE FOLLOWING IN-SITU ASSUMED SOIL PARAMETERS:
- UNIT WEIGHT, γ = 120 LB/CF
- FRICTION ANGLE, ϕ = 35 DEGREES (GROUNDWATER WITHIN 7' OF BOTTOM OF FOOTING)
- FRICTION ANGLE, ϕ = 30 DEGREES (GROUNDWATER MORE THAN 7' BELOW BOTTOM OF FOOTING)
- COHESION, c = 0 LB/SF

DO NOT USE STANDARD CIP GRAVITY WALLS IF ASSUMED SOIL PARAMETERS ARE NOT APPLICABLE OR GROUNDWATER IS ABOVE BOTTOM OF FOOTING.

DO NOT USE STANDARD CIP GRAVITY WALLS WHEN VERY LOOSE OR SOFT SOIL OR MUCK IS BELOW WALLS.

BEFORE BEGINNING STANDARD CIP GRAVITY WALL CONSTRUCTION, SURVEY WALL LOCATIONS AND SUBMIT WALL PROFILE VIEWS (WALL ENVELOPES) FOR REVIEW. FOR WALL ENVELOPES, INCLUDE BOTTOM OF WALL, EXISTING GROUND AND GRADE ELEVATIONS AND OTHER ELEVATIONS AS NEEDED AT INTERVALS OF 25' OR LESS ALONG WALLS. DO NOT START WALL CONSTRUCTION UNTIL WALL ENVELOPES ARE ACCEPTED.

FOR BRICK VENEERS, SUBMIT BRICK SAMPLES FOR APPROVAL BEFORE BEGINNING STANDARD CIP GRAVITY WALL CONSTRUCTION.

DO NOT PLACE CONCRETE FOR FOOTINGS UNTIL EXCAVATION DIMENSIONS AND FOUNDATION MATERIAL ARE APPROVED.

WHEN CONSTRUCTING STANDARD CIP GRAVITY WALLS WITH A CONSTRUCTION JOINT AS SHOWN IN DETAIL "A", PROVIDE A MINIMUM OF 3 EQUALLY SPACED #4 DOWELS AT INTERVALS OF 1'-6" ALONG WALLS.

REVISIONS

5/3/2013 3:54:17 PM
G:\DR Projects\DR1100 - NCDOT Group W\430216\Roadway\Proj\430216_RDY_028_WALL.dgn
G:\CADD\Plots\DR1100\11100_rdy.tbl

GEOTECHNICAL ENGINEERING UNIT

STATE OF NORTH CAROLINA DEPARTMENT OF TRANSPORTATION RALEIGH

STANDARD DRAWING NO. 453.01

STANDARD CAST-IN-PLACE (CIP) GRAVITY RETAINING WALL

DATE: 1-17-12

THE LOUIS BERGER GROUP, Inc.
1001 Wade Avenue, Suite 400
Raleigh, NC 27605-3322

ROADWAY PLANS

STATE OF NORTH CAROLINA
DIVISION OF HIGHWAYS

SUMMARY OF QUANTITIES

Line Item	Des	Sec No.	Description	Quantity	Unit
1	0000100000-N	800	MOBILIZATION	1	LS
2	0000400000-N	801	CONSTRUCTION SURVEYING	1	LS
3	0005000000-E	200	SUPPLEMENTARY CLEARING & GRUBBING	1	ACR
4	0030000000-N	SP	BRIDGE APPROACH FILL - SUB REGIONAL TIER, STATION -L- 12+16	1	LS
5	0036000000-E	225	UNDERCUT EXCAVATION	50	CY
6	0043000000-N	226	GRADING	1	LS
7	0001000000-E	200	CLEARING & GRUBBING (0.5 Acres)	1	LS
8	0022000000-E	225	UNCLASSIFIED EXCAVATION	230	CY
9	0100000000-E	230	BORROW EXCAVATION	65	CY
10	1011000000-N	500	FINE GRADING (990 SY)	1	LS
11	0195000000-E	265	SELECT GRANULAR MATERIAL	50	CY
12	0196000000-E	270	GEOTEXTILE FOR SOIL STABILIZA-TION	50	SY
13	0199000000-E	SP	TEMPORARY SHORING	600	SF
14	0318000000-E	300	FOUNDATION CONDITIONING MATERIAL MINOR STRUCTURES	10	TON
15	0320000000-E	300	FOUNDATION CONDITIONING FABRIC	20	SY
16	0343000000-E	310	15" SIDE DRAIN PIPE	22	LF
17	0366000000-E	310	15" RC PIPE CULVERTS, CLASS III	12	LF
18	1099700000-E	505	CLASS IV SUBGRADE STABILIZA- TION	50	TON
19	1121000000-E	520	AGGREGATE BASE COURSE	49	TON
20	1220000000-E	545	INCIDENTAL STONE BASE	50	TON
21	1489000000-E	610	ASPHALT CONC BASE COURSE, TYPE B25.0B	210	TON
22	1519000000-E	610	ASPHALT CONC SURFACE COURSE, TYPE S9.5B	140	TON
23	1575000000-E	620	ASPHALT BINDER FOR PLANT MIX	20	TON
24	2000000000-N	806	RIGHT OF WAY MARKERS	13	EA
25	2286000000-N	840	MASONRY DRAINAGE STRUCTURES	1	EA
26	2407000000-N	840	STEEL FRAME WITH TWO GRATES, STD 840.37	1	EA
27	2556000000-E	846	SHOULDER BERM GUTTER	10	LF
28	3030000000-E	862	STEEL BM GUARDRAIL	6.25	LF
29	3045000000-E	862	STEEL BM GUARDRAIL, SHOP CURVED	12.5	LF
30	3165000000-N	SP	GUARDRAIL ANCHOR UNITS, TYPE 350 TL-2	1	EA
31	3195000000-N	862	GUARDRAIL ANCHOR UNITS, TYPE AT-1	3	EA
32	3215000000-N	862	GUARDRAIL ANCHOR UNITS, TYPE III	4	EA
33	3628000000-E	876	RIP RAP, CLASS I	2	TON
34	3649000000-E	876	RIP RAP, CLASS B	15	TON
35	3656000000-E	876	GEOTEXTILE FOR DRAINAGE	40	SY
36	4400000000-E	1110	WORK ZONE SIGNS (STATIONARY)	144	SF
37	4410000000-E	1110	WORK ZONE SIGNS (BARRICADE MOUNTED)	20	SF
38	4430000000-E	1130	DRUMS	30	EA
39	4445000000-E	1145	BARRICADES (TYPE III)	16	LF
40	4450000000-N	1150	FLAGGER	32	HR
41	4465000000-E	1160	TEMPORARY CRASH CUSHIONS	2	EA
42	4490000000-E	1170	PORTABLE CONCRETE BARRIER (ANCHORED)	30	LF
43	4810000000-E	1205	PAINT PAVEMENT MARKING LINES (4")	1,860	LF
44	6000000000-E	1605	TEMPORARY SILT FENCE	500	LF
45	6009000000-E	1610	STONE FOR EROSION CONTROL, CLASS B	20	TON
46	6012000000-E	1610	SEDIMENT CONTROL STONE	20	TON
47	6015000000-E	1615	TEMPORARY MULCHING	0.6	ACR
48	6018000000-E	1620	SEED FOR TEMPORARY SEEDING	50	LB
49	6021000000-E	1620	FERTILIZER FOR TEMPORARY SEEDING	0.25	TON
50	6024000000-E	1622	TEMPORARY SLOPE DRAINS	200.00	LF
51	6029000000-E	SP	SAFETY FENCE	100	LF
52	6030000000-E	1630	SILT EXCAVATION	20	CY
53	6036000000-E	1631	MATTING FOR EROSION CONTROL	2,420	SY
54	6042000000-E	1632	1/4" HARDWARE CLOTH	55	LF
55	6071000000-E	SP	POLYACRYLAMIDE (PAM)	10	LB
56	6084000000-E	1660	SEEDING & MULCHING	0.6	ACR
57	6087000000-E	1660	MOWING	0.6	ACR
58	6090000000-E	1661	SEED FOR REPAIR SEEDING	50	LB
59	6093000000-E	1661	FERTILIZER FOR REPAIR SEEDING	0.25	TON
60	6096000000-E	1662	SEED FOR SUPPLEMENTAL SEEDING	50	LB
61	6108000000-E	1665	FERTILIZER TOPDRESSING	0.50	TON
62	6114500000-N	1667	SPECIALIZED HAND MOWING	10	MHR
63	6117000000-N	SP	RESPONSE FOR EROSION CONTROL	9	EA
			STRUCTURES		
64	8035000000-N	402	REMOVAL OF EXISTING STRUCTURE AT STATION -L- 12+16	1	LS
65	8077000000-E	410	FOUNDATION EXCAVATION (RETAINING WALL)	15	CY
66	8084000000-N	410	FOUNDATION EXCAVATION FOR END BENT ** AT STATION -L- 12+16	1	LS
67	8121000000-N	412	UNCLASSIFIED STRUCTURE EXCAVA-TION AT STATION -L- 12+16	1	LS
68	8182000000-E	420	CLASS A CONCRETE (BRIDGE)	112.2	CY
69	8210000000-N	422	BRIDGE APPROACH SLABS, STATION -L- 12+16	1	LS
70	8217000000-E	425	REINFORCING STEEL (BRIDGE)	12,201	LB
71	8505000000-E	460	VERTICAL CONCRETE BARRIER RAIL	60.29	LF
72	8605000000-E	876	RIP RAP CLASS II (2'-0" THICK)	71	TON
73	8622000000-E	876	GEOTEXTILE FOR DRAINAGE	15	SY
74	8657000000-N	430	ELASTOMERIC BEARINGS	1	LS
75	8762000000-E	430	3'-0" X 1'-9" PRESTRESSED CONC CORED SLABS	300	LF
76	8847000000-E	SP	GENERIC RETAINING WALL ITEM	170	SF

REVISIONS

6/3/2013 11:29:39 AM
G:\DR Projects\DR1302 - NCDOT Group V\1302216\Roadway\Proj\1302216_RDY_03_SOQ.dgn
G:\CADD\Plot\DR1302\1302_rdy.tbl

THE LOUIS BERGER GROUP, Inc.
1001 Wade Avenue, Suite 400
Raleigh, NC 27605-3322

ROADWAY PLANS

STATE OF NORTH CAROLINA
DIVISION OF HIGHWAYS

"N" = DISTANCE FROM EDGE OF LANE TO FACE OF GUARDRAIL.
TOTAL SHOULDER WIDTH = DISTANCE FROM EDGE OF TRAVEL LANE TO SHOULDER BREAK POINT.
FLARE LENGTH = DISTANCE FROM LAST SECTION OF PARALLEL GUARDRAIL TO END OF GUARDRAIL.
W = TOTAL WIDTH OF FLARE FROM BEGINNING OF TAPER TO END OF GUARDRAIL.
G = GATING IMPACT ATTENUATOR TYPE 350
NG = NON-GATING IMPACT ATTENUATOR TYPE 350

GUARDRAIL SUMMARY

SURVEY LINE	BEG. STA.	END STA.	LOCATION	LENGTH			WARRANT POINT		"N" DIST. FROM E.O.L.	TOTAL SHOUL. WIDTH	FLARE LENGTH		W		ANCHORS									IMPACT ATTENUATOR TYPE 350			SINGLE FACED GUARDRAIL	REMOVE EXISTING GUARDRAIL	REMOVE AND STOCKPILE EXISTING GUARDRAIL	REMARKS
				STRAIGHT	SHOP CURVED	DOUBLE FACED	APPROACH END	TRAILING END			APPROACH END	TRAILING END	APPROACH END	TRAILING END	XI MOD	XI	GRAU 350 TL-2	M-350	TYPE-III	CAT-1	VI MOD	B-77	AT-1	EA	G	NG				
-L-	11+66.03	11+91.03	RT	25'	-	-	-	-	4'	-	-	-	-	-	-	-	-	-	1	-	-	-	1	-	-	-	-	-	-	-
-L-	11+82.91	12+07.91	LT	25'	-	-	-	-	2.5'	-	-	-	-	-	-	-	-	-	1	-	-	-	1	-	-	-	-	-	-	-
-L-	12+24.05	12+67.80	RT	43.75	12.5	-	-	-	4'	-	-	-	-	-	-	-	-	-	1	-	-	-	1	-	-	-	-	-	-	-
-L-	12+39.82	12+83.57	LT	43.75	-	-	-	-	3'	-	-	-	-	-	-	-	1	-	1	-	-	-	-	-	-	-	-	-	-	-
-	-	-	-	-	-	-	-	-	-	-	-	-	-	-	-	-	-	-	-	-	-	-	-	-	-	-	-			-
-	-	-	-	-	-	-	-	-	-	-	-	-	-	-	DEDUCTIONS FOR GUARDRAIL ANCHOR UNITS						-	-	-	-	-	-	-	-	-	-
			SUB-TOTAL	137.5'											TYPE TL-2			1 @ 25.00' =		25'										
	DEDUCTIONS FOR GUARDRAIL ANCHOR UNITS			118.75'											TYPE-III			4 @ 18.75' =		75'										
			TOTAL	18.75'											AT-1			3 @ 6.25' =		18.75'										
			SAY	18.75'															TOTAL =	118.75'										

SUMMARY OF EARTHWORK (IN CUBIC YARDS)

STATION	STATION	UNCL. EXCAV.	EMBANK. +%	BORROW	WASTE
PHASE I					
-L- 10+60.00	11+99.59 (BEGIN BRIDGE)	76	0	0	76
-L- 12+32.18 (END BRIDGE)	13+60.00	25	77	64	-64
PROJECT SUBTOTAL:		101	77	64	12
PHASE II					
-L- 10+60.00	11+99.59 (BEGIN BRIDGE)	66	0	0	66
-L- 12+32.18 (END BRIDGE)	13+60.00	53	3	0	50
-DWY1- 10+20.00	10+90.00	7	1	0	6
-DWY2- 10+10.00	10+80.00	14	1	0	13
PROJECT SUBTOTAL:		140	5	0	135
PROJECT TOTALS:		241	82	64	147
		-	-	-	-
-		-	-	-	-
WASTE IN LIEU OF BORROW		-	-	35	-35
LOSS DUE TO CLEARING & GRUBBING		-15	-	-35	-
-		-	-	-	-
-		-	-	-	-
GRAND TOTALS:		226	0	64	112
-		-	-	-	-
SAY:		230	-	65	115

CONTINGENCY ITEMS
UNDERCUT EXCAVATION 50 CY
SELECT GRANULAR MATERIAL 50 CY
GEOTEXTILE FOR SOIL STABILIZATION 50 SY
CLASS IV SUBGRADE STABILIZATION 50 TON

NOTE: INVERT ELEVATIONS INDICATED ARE FOR BID PURPOSES ONLY AND SHALL NOT BE USED FOR PROJECT CONSTRUCTION STAKEOUT.
SEE "STANDARDS SPECIFICATIONS FOR ROADS AND STRUCTURES, SECTION 300-5".

LIST OF PIPES, ENDWALLS, ETC. (FOR PIPES 48" & UNDER)

STATION	LOCATION (LT, RT, OR CL)	STRUCTURE NO. FROM	STRUCTURE NO. TO	TOP ELEVATION	INVERT ELEVATION	INVERT ELEVATION	SLOPE CRITICAL
-L- 11+75	RT	0401		2690.08			
	RT	0401	0402		2688.00	2687.65	
-DWY2- 10+22	CL				2690.00	2689.30	
SHEET TOTALS							

STATION	DRAINAGE PIPE (RCP, CSP, CAAP, HDPE, or PVC) 12" / 15" / 18" / 24" / 30" / 36" / 42" / 48"; DO NOT USE RCP; DO NOT USE CSP; DO NOT USE CAAP; DO NOT USE HDPE	C.S. PIPE 12" (.064) / 15" (.064) / 18" (.064) / 24" (.064) / 30" (.079) / 36" (.079) / 42" (.109) / 48" (.109)
-L- 11+75		
-DWY2- 10+22		
SHEET TOTALS		

STATION	R.C. PIPE CLASS III 12"	15"	18"	24"	30"	36"	42"	48"	R.C. PIPE CLASS IV 12" / 15" / 18" / 24" / 30" / 36" / 42" / 48"
-L- 11+75									
		12							
-DWY2- 10+22									
SHEET TOTALS		12							

STATION	** R.C. PIPE (CLASS V)	**** R.C. PIPE CULVERTS, CONTRACTOR DESIGN	**** R.C. PIPE CULVERTS, CONTRACTOR DESIGN	15" SIDE DRAIN PIPE	ENDWALLS STD. 838.01, STD. 838.11 OR STD. 838.80 (UNLESS NOTED OTHERWISE) CU. YDS. R.C.P.	C.S.P.	QUANTITIES FOR DRAINAGE STRUCTURES PER EACH (0' THRU 5.0')	* TOTAL L.F. FOR PAY QUANTITY SHALL BE COL. "A" + (1.3 X COL."B") UN. FT. A 5.0' THRU 10.0'	B 10.0' AND ABOVE	C.B. STD. 840.01 OR STD. 840.02
-L- 11+75										
-DWY2- 10+22										
				22						
SHEET TOTALS				22						

STATION	FRAME, GRATES AND HOOD STANDARD 840.03 TYPE OF GRATE E	F	G		CONCRETE TRASITIONAL SECTION DROP INLET	CATCH BASIN	D.I. STD. 840.14 OR STD. 840.15	D.I. FRAME & GRATE STD. 840.16	G.D.I. TYPE "A" STD. 840.17 OR 840.26	G.D.I. TYPE "B" STD. 840.18 OR 840.27	G.D.I. TYPE "D" STD. 840.19 OR 840.28	G.D.I. FRAME WITH GRATE STD. 840.20	G.D.I. FRAME WITH TWO GRATE STD. 840.22	G.D.I. (N.S.) FRAME WITH GRATE STD. 840.24	G.D.I. (N.S.) FRAME WITH TWO GRATES STD. 840.29
-L- 11+75															
-DWY2- 10+22															
SHEET TOTALS															

STATION	T.B.D.I STD. 840.36	STEEL GRATE AND FRAME STD. 840.37 FOR STD. 840.36	F.E.S. FLARED END SECTION STD	CONVERT TO MH	DRAINAGE PIPE ELBOWS NO. & SIZE	DRAINAGE PIPE ELBOWS NO. & SIZE	CONC. & BRICK PIPE PLUG, C.Y. STD. 840.71	CONC. COLLARS CL "B" C.Y. STD 840.72	PIPE REMOVAL LIN. FT.	REMARKS
-L- 11+75	1	1								
-DWY2- 10+22										
SHEET TOTALS	1	1								

ABBREVIATIONS

- C.B. CATCH BASIN
- N.D.I. NARROW DROP INLET
- D.I. DROP INLET
- G.D.I. GRATED DROP INLET
- G.D.I. (N.S.) GRATED DROP INLET (NARROW SLOT)
- J.B. JUNCTION BOX
- M.H. MANHOLE
- T.B.D.I. TRAFFIC BEARING DROP INLET
- T.B.J.B. TRAFFIC BEARING JUNCTION BOX

Note: Approximate quantities only. Unclassified Excavation, Borrow Excavation, Fine Grading, and Clearing and Grubbing will be paid for at the contract lump sum price for "Grading."

REVISIONS

5/23/2013 10:34:36 AM
G:\OR Projects\OR1100 - NCDOT Group W\430216\Roadway\Proj\430216_RDY_03A_SUMMARY.dgn
G:\CADD\Plot\OR1100\1100_rdy.tbl

THE LOUIS BERGER GROUP, Inc.
1001 Wade Avenue, Suite 400
Raleigh, NC 27605-3322

ROADWAY PLANS

PROJECT REFERENCE NO.	SHEET NO.
17BP.14.R.10	4
R/W SHEET NO.	

ROADWAY DESIGN ENGINEER — NORTH CAROLINA PROFESSIONAL SEAL 16903 ENGINEER — REGISTERED ENGINEER 6/3/2013

HYDRAULICS ENGINEER — NORTH CAROLINA PROFESSIONAL SEAL 026876 ENGINEER — REGISTERED ENGINEER 6/3/2013

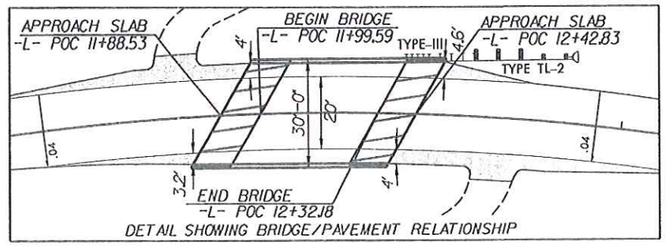

DETAIL SHOWING BRIDGE/PAVEMENT RELATIONSHIP

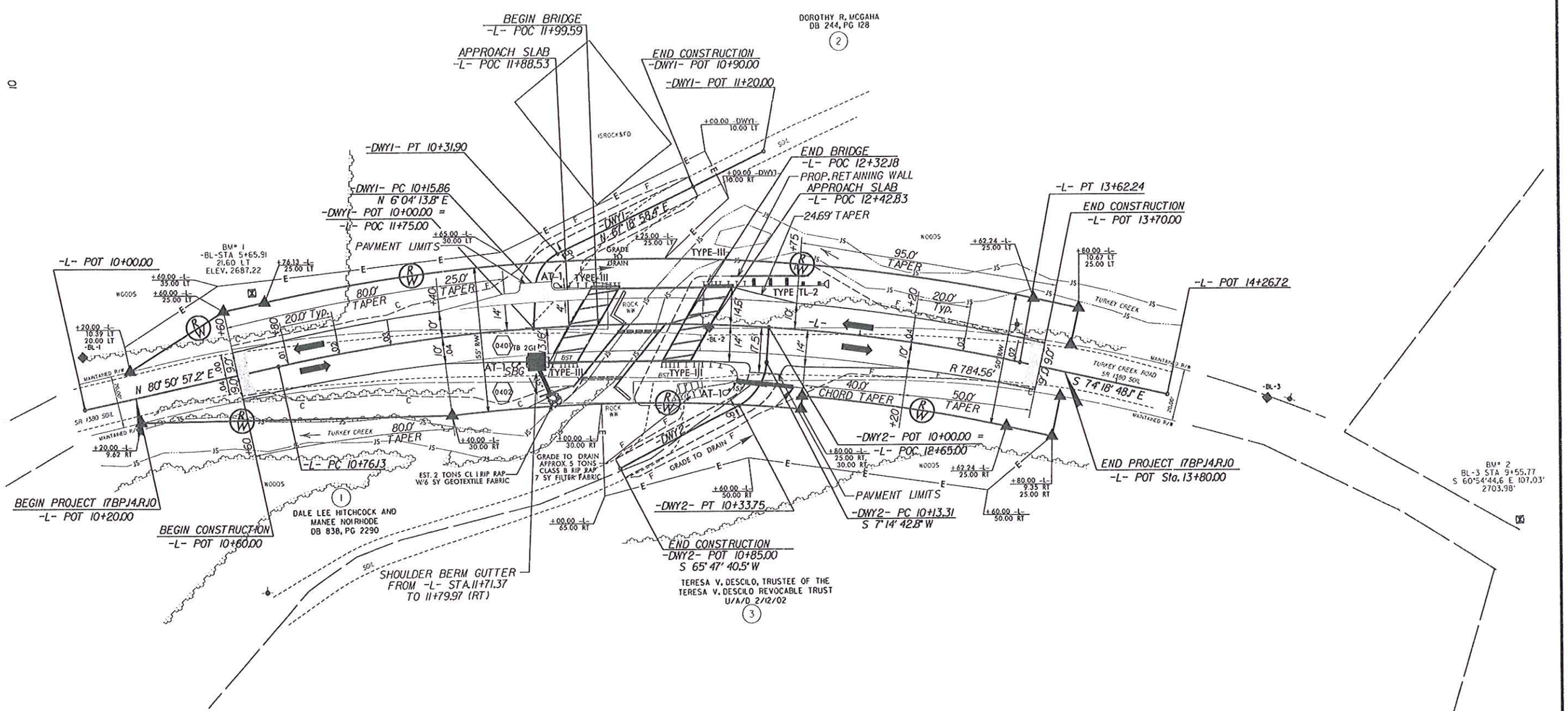

DETAIL A
CUT DITCH
(Not to Scale)

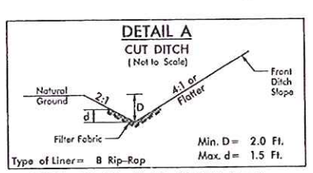

FROM STA. 12+40 TO STA. 12+50 RT
FROM STA. 12+75 TO STA. 12+90 RT

CURVE DATA FOR -L-
PI Sta 12+21.47
Δ = 24° 50' 14.7" (RT)
D = 8° 40' 52.2"
L = 286.11'
T = 145.34'
R = 660.00'
Se = 0.04

CURVE DATA FOR -DWY1-
PI Sta 10+24.74
Δ = 61° 14' 44.6" (RT)
D = 381° 58' 18.7"
L = 16.03'
T = 8.88'
R = 15.00'

CURVE DATA FOR -DWY2-
PI Sta 10+24.52
Δ = 58° 32' 57.7" (RT)
D = 286° 28' 44.0"
L = 20.44'
T = 11.21'
R = 20.00'

SEE SHEET 5 FOR PROFILE
SEE SHEETS S-1 THRU S-20 FOR STRUCTURE PLANS
SEE SHEETS 2A-2B FOR RETAINING WALL DETAILS

THE LOUIS BERGER GROUP, Inc.
1001 Wade Avenue, Suite 400
Raleigh, NC 27605-3322

ROADWAY PLANS

REVISIONS

6/3/2013 2:26:20 PM
G:\DR Projects\DR1100 - NCDOT Group W\430216\Roadway\Proj\430216_RDY_04_PSH.dgn
G:\CADD\Plot\DR1100\1100_rdy.tbl

THE LOUIS BERGER GROUP, Inc.
1001 Wade Avenue, Suite 400
Raleigh, North Carolina 27605

PROJECT REFERENCE NO.	SHEET NO.
17BP.14.R.10	5

ROADWAY DESIGN ENGINEER — NORTH CAROLINA PROFESSIONAL SEAL 16000 ENGINEER DAVID L. HAIFIGH

HYDRAULICS ENGINEER — NORTH CAROLINA PROFESSIONAL SEAL 027976 ENGINEER MARK STARGILL

0 20 40 HORIZONTAL
0 4 8 VERTICAL

BRIDGE HYDRAULIC DATA

DESIGN DISCHARGE	= 420 CFS
DESIGN FREQUENCY	= 10 YRS
DESIGN HW ELEVATION	= 2691.5 FT
BASE DISCHARGE	= 820 CFS
BASE FREQUENCY	= 100 YRS
BASE HW ELEVATION	= 2693.0 FT
OVERTOPPING DISCHARGE	= 640 CFS
OVERTOPPING FREQUENCY	= 25+ YRS
OVERTOPPING ELEVATION	= 2693.2 FT
DATE OF SURVEY	= 1/18/2012
W.S. ELEVATION AT DATE OF SURVEY	= 2684.3 FT

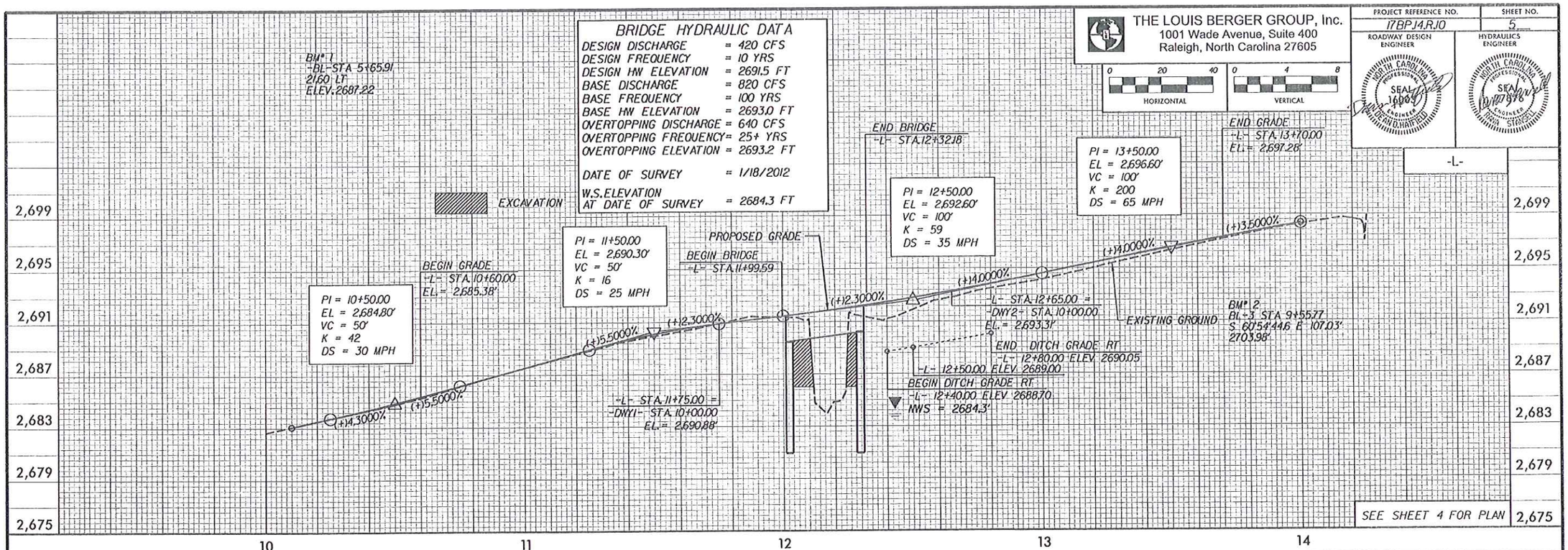

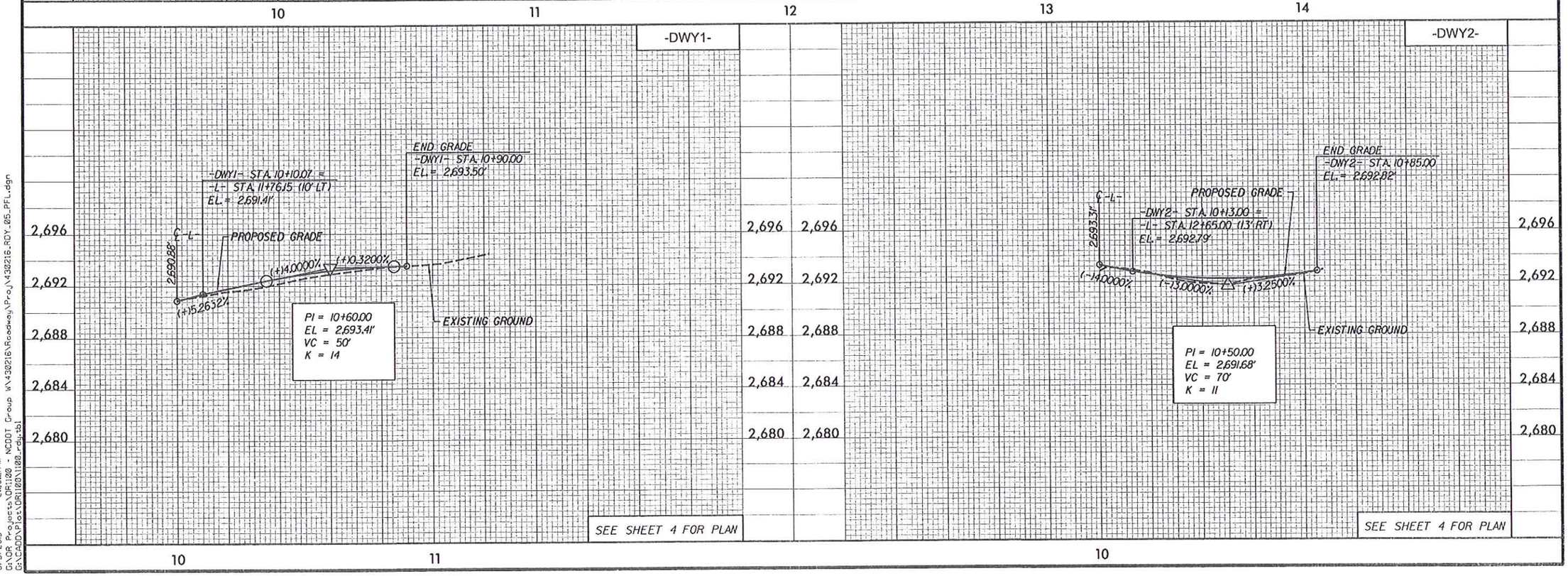

6/3/2013 2:26:21 PM
G:\DR Projects\DR1130 - NCDOT Group W\430216\Roadway\Proj\430216_RDY_05_PFL.dgn
G:\CADD\Plots\DR1130\1100_rdy.tbl

STATE OF NORTH CAROLINA
DIVISION OF HIGHWAYS

TRANSPORTATION MANAGEMENT PLAN

HAYWOOD COUNTY

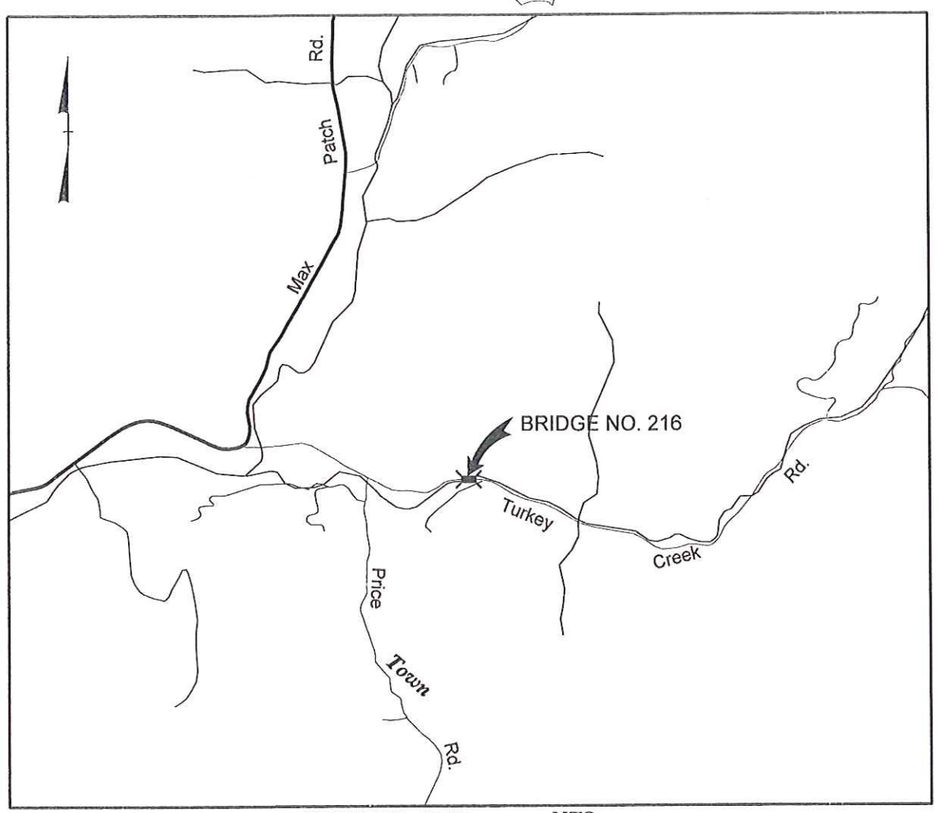

VICINITY MAP NTS

LOCATION: BRIDGE NO. 216 ON SR 1380 (TURKEY CREEK RD) OVER TURKEY CREEK

INDEX OF SHEETS

SHEET NO.	TITLE
TMP-1	TITLE SHEET, AND INDEX OF SHEETS
TMP-1A	LIST OF APPLICABLE ROADWAY STANDARD DRAWINGS, LEGEND, AND TEMPORARY PAVEMENT MARKING
TMP-1B	TRANSPORTATION OPERATIONS PLAN: (MANAGEMENT STRATEGIES, GENERAL NOTES AND LOCAL NOTES)
TMP-2	TEMPORARY TRAFFIC CONTROL PHASING
TMP-3	TEMPORARY TRAFFIC CONTROL PHASE I DETAIL
TMP-3	TEMPORARY TRAFFIC CONTROL PHASE II DETAIL

SHEET NO.
TMP-1

PROJECT: 17BP.14.R.10

THE LOUIS BERGER GROUP, Inc.
1001 Wade Avenue, Suite 400
Raleigh, North Carolina 27605

APPROVED: D. D. Hatfield
DATE: 6/3/13

SEAL NORTH CAROLINA PROFESSIONAL SEAL 16003 ENGINEER DEAN D. HATFIELD

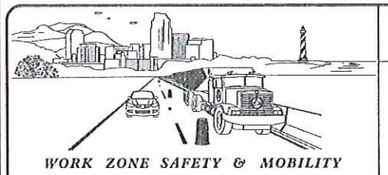

WORK ZONE SAFETY & MOBILITY
"from the MOUNTAINS to the COAST"

N.C.D.O.T. WORK ZONE TRAFFIC CONTROL
1561 MAIL SERVICE CENTER (MSC) RALEIGH, NC 27699-1561
750 N. GREENFIELD PARKWAY, GARNER, NC 27529 (DELIVERY)
PHONE: (919) 773-2800 FAX: (919) 771-2745

J. S. BOURNE, P.E. — *STATE TRAFFIC MANAGEMENT ENGINEER*
D. D. HATFIELD, PE — *TRAFFIC CONTROL PROJECT ENGINEER*
C. W. WHITE, PE — *TRAFFIC CONTROL PROJECT DESIGN ENGINEER*
J. O. MORRISON, PE — *TRAFFIC CONTROL DESIGN ENGINEER*

DIVISION OF HIGHWAYS · STATE OF NORTH CAROLINA · DEPARTMENT OF TRANSPORTATION · WORK ZONE TRAFFIC CONTROL

5/3/2013 3:54:41PM
G:\OR Projects\OR1100 - NCDOT Group W\430216\Roadway\Proj\430216_RDY_06_TMP1.dgn
1100_rdy-omo.tbl

ROADWAY STANDARD DRAWINGS

THE FOLLOWING ROADWAY STANDARDS AS SHOWN IN "ROADWAY STANDARD DRAWINGS" - PROJECT SERVICES UNIT - N.C. DEPARTMENT OF TRANSPORTATION - RALEIGH, N.C., DATED JANUARY 2012 ARE APPLICABLE TO THIS PROJECT AND BY REFERENCE HEREBY ARE CONSIDERED A PART OF THESE PLANS:

STD. NO.	TITLE
1101.01	WORK ZONE ADVANCE WARNING SIGNS
1101.02	TEMPORARY LANE CLOSURES
1101.05	WORK ZONE VEHICLE ACCESSES
1101.11	TRAFFIC CONTROL DESIGN TABLES
1110.01	STATIONARY WORK ZONE SIGNS
1130.01	DRUMS
1145.01	BARRICADES
1150.01	FLAGGING DEVICES
1160.01	TEMPORARY CRASH CUSHION
1170.01	PORTABLE CONCRETE BARRIER
1205.01	PAVEMENT MARKINGS - LINE TYPES & OFFSETS
1205.02	PAVEMENT MARKINGS - 2 LANE & MULTILANE ROADWAYS

LEGEND

GENERAL

- DIRECTION OF TRAFFIC FLOW
- DIRECTION OF PEDESTRIAN TRAFFIC FLOW
- EXIST. PVMT.
- NORTH ARROW
- PROPOSED PVMT.
- TEMP. SHORING (LOCATION PURPOSES ONLY)

TRAFFIC CONTROL DEVICES

- BARRICADE (TYPE III)
- DRUM
- TEMPORARY CRASH CUSHION

TEMPORARY SIGNING

- STATIONARY SIGN

TEMPORARY PAVEMENT MARKING

PAINT 4"

PA WHITE EDGELINE

STOPBAR

P4 24" WHITE STOPBAR

APPROVED: Dean Hatfield DATE: 6/3/13

SEAL

NORTH CAROLINA PROFESSIONAL SEAL 16003 ENGINEER DEAN D. HATFIELD

DIVISION OF HIGHWAYS STATE OF NORTH CAROLINA DEPARTMENT OF TRANSPORTATION WORK ZONE TRAFFIC CONTROL SEAL

ROADWAY STANDARD DRAWINGS & LEGEND

5/3/2013 3:54:48 PM
G:\DR Projects\DR1100 - NCDOT Group WX\430216\Roadway\Proj\430216_RDY_06_TMP1A.dgn
1100 rdurnmn.tbl

PROJ. REFERENCE NO.	SHEET NO.
17BP.14.R.10	TMP-1B

MANAGEMENT STRATEGIES

-DURING CONSTRUCTION, SR 1380 (TURKEY CREEK ROAD) TRAFFIC WILL BE PLACED IN A ONE LANE, TWO WAY PATTERN PER NCDOT.

-SIGNAGE AT THE BEGINNING AND END OF CONSTRUCTION WILL MANAGE SR 1380 TRAFFIC.

-THE CONSTRUCTION OF TIE INS, TRAFFIC SHIFTS, PLACEMENT OF FINAL SURFACE COURSE AND PAVEMENT MARKINGS WILL BE PERFORMED USING FLAGGERS FOR TWO LANE, ONE WAY TRAFFIC OPERATION.

GENERAL NOTES / LOCAL NOTES

CHANGES MAY BE REQUIRED WHEN PHYSICAL DIMENSIONS IN THE DETAIL DRAWINGS, STANDARD DETAILS, AND ROADWAY DETAILS ARE NOT ATTAINABLE TO MEET FIELD CONDITIONS OR RESULT IN DUPLICATE OR UNDESIRED OVERLAPPING OF DEVICES. MODIFICATION MAY INCLUDE: MOVING, SUPPLEMENTING, COVERING, OR REMOVAL OF DEVICES AS DIRECTED BY THE ENGINEER.

THE FOLLOWING GENERAL NOTES APPLY AT ALL TIMES FOR THE DURATION OF THE CONSTRUCTION PROJECT EXCEPT WHEN OTHERWISE NOTED IN THE PLAN OR DIRECTED BY THE ENGINEER.

LANE AND SHOULDER CLOSURE REQUIREMENTS

A) REMOVE LANE CLOSURE DEVICES FROM THE LANE WHEN WORK IS NOT BEING PERFORMED BEHIND THE LANE CLOSURE OR WHEN A LANE CLOSURE IS NO LONGER NEEDED OR AS DIRECTED BY THE ENGINEER.

B) WHEN PERSONNEL AND/OR EQUIPMENT ARE WORKING WITHIN A LANE OF TRAVEL OF AN UNDIVIDED OR DIVIDED FACILITY, CLOSE THE LANE ACCORDING TO THE TRAFFIC CONTROL PLANS, ROADWAY STANDARD DRAWINGS, OR AS DIRECTED BY THE ENGINEER. CONDUCT THE WORK SO THAT ALL PERSONNEL AND/OR EQUIPMENT REMAIN WITHIN THE CLOSED TRAVEL LANE.

C) DO NOT WORK SIMULTANEOUSLY WITHIN 15 FT ON BOTH SIDES OF AN OPEN TRAVELWAY, RAMP, OR LOOP WITHIN THE SAME LOCATION UNLESS PROTECTED WITH GUARDRAIL OR BARRIER.

PAVEMENT EDGE DROP OFF REQUIREMENTS

D) BACKFILL AT A 6:1 SLOPE UP TO THE EDGE AND ELEVATION OF EXISTING PAVEMENT IN AREAS ADJACENT TO AN OPENED TRAVEL LANE THAT HAS AN EDGE OF PAVEMENT DROP-OFF AS FOLLOWS:

BACKFILL DROP-OFFS THAT EXCEED 2 INCHES ON ROADWAYS WITH POSTED SPEED LIMITS OF 45 MPH OR GREATER.

BACKFILL DROP-OFFS THAT EXCEED 3 INCHES ON ROADWAYS WITH POSTED SPEED LIMITS LESS THAN 45 MPH.

BACKFILL WITH SUITABLE COMPACTED MATERIAL, AS APPROVED BY THE ENGINEER, AT NO EXPENSE TO THE DEPARTMENT.

E) DO NOT EXCEED A DIFFERENCE OF 2 INCHES IN ELEVATION BETWEEN OPEN LANES OF TRAFFIC FOR NOMINAL LIFTS OF 1.5 INCHES. INSTALL ADVANCE WARNING "UNEVEN LANES" SIGNS (W8-11) 200 ft IN ADVANCE AND A MINIMUM OF EVERY HALF MILE THROUGHOUT THE UNEVEN AREA.

TRAFFIC PATTERN ALTERATIONS

F) NOTIFY THE ENGINEER TWENTY ONE (21) CALENDAR DAYS PRIOR TO ANY TRAFFIC PATTERN ALTERATION.

SIGNING

G) INSTALL ADVANCE WORK ZONE WARNING SIGNS WHEN WORK IS WITHIN 40 FT FROM THE EDGE OF TRAVEL LANE AND NO MORE THAN THREE (3) DAYS PRIOR TO THE BEGINNING OF CONSTRUCTION.

H) ENSURE ALL NECESSARY SIGNING IS IN PLACE PRIOR TO ALTERING ANY TRAFFIC PATTERN.

TRAFFIC BARRIER

I) INSTALL TEMPORARY BARRIER ACCORDING TO THE TRAFFIC CONTROL PLANS A MAXIMUM OF TWO (2) WEEKS PRIOR TO BEGINNING WORK IN ANY LOCATION. ONCE TEMPORARY BARRIER IS INSTALLED AT ANY LOCATION PROCEED IN A CONTINUOUS MANNER TO COMPLETE THE PROPOSED WORK IN THAT LOCATION UNLESS OTHERWISE STATED IN THE TRAFFIC CONTROL PLANS OR AS DIRECTED BY THE ENGINEER.

DO NOT PLACE BARRIER DIRECTLY ON ANY SURFACE OTHER THAN ASPHALT OR CONCRETE.

ONCE TEMPORARY BARRIER IS INSTALLED AT ANY LOCATION AND NO WORK IS PERFORMED BEHIND THE TEMPORARY BARRIER FOR A PERIOD LONGER THAN TWO (2) MONTHS, REMOVE/RESET TEMPORARY BARRIER AT NO COST TO THE DEPARTMENT UNLESS OTHERWISE STATED IN THE TRAFFIC CONTROL PLANS. TEMPORARY BARRIER IS PROTECTING A HAZARD, OR AS DIRECTED BY THE ENGINEER.

INSTALL TEMPORARY BARRIER WITH THE TRAFFIC FLOW BEGINNING WITH THE UPSTREAM SIDE OF TRAFFIC. REMOVE TEMPORARY BARRIER AGAINST THE TRAFFIC FLOW BEGINNING WITH THE DOWNSTREAM SIDE OF TRAFFIC.

INSTALL AND SPACE DRUMS NO GREATER THAN TWICE THE POSTED SPEED LIMIT (MPH) TO CLOSE OR KEEP THE SECTION OF THE ROADWAY CLOSED UNTIL THE TEMPORARY BARRIER CAN BE PLACED OR AFTER THE TEMPORARY BARRIER IS REMOVED.

J) PROTECT THE APPROACH END OF MOVABLE/PORTABLE CONCRETE BARRIER AT ALL TIMES DURING THE INSTALLATION AND REMOVAL OF THE BARRIER BY EITHER A TRUCK MOUNTED IMPACT ATTENUATOR (MAXIMUM 72 HOURS) OR A TEMPORARY CRASH CUSHION.

PROTECT THE APPROACH END OF MOVABLE/PORTABLE CONCRETE BARRIER FROM ONCOMING TRAFFIC AT ALL TIMES BY A TEMPORARY CRASH CUSHION UNLESS THE APPROACH END OF MOVABLE/PORTABLE CONCRETE BARRIER IS OFFSET FROM ONCOMING TRAFFIC AS FOLLOWS OR AS SHOWN IN THE PLANS:

POSTED SPEED LIMIT	MINIMUM OFFSET
40 OR LESS	15 FT
45 - 50	20 FT
55	25 FT
60 MPH or HIGHER	30 FT

TRAFFIC CONTROL DEVICES

K) WHEN LANE CLOSURES ARE NOT IN EFFECT SPACE CHANNELIZING DEVICES IN WORK AREAS NO GREATER IN FEET THAN TWICE THE POSTED SPEED LIMIT (MPH) EXCEPT, 10 FT ON-CENTER IN RADII, AND 3 FT OFF THE EDGE OF AN OPEN TRAVELWAY. REFER TO STANDARD SPECIFICATIONS FOR ROADS AND STRUCTURES SECTIONS 1130 (DRUMS), 1135 (CONES) AND 1180 (SKINNY DRUMS) FOR ADDITIONAL REQUIREMENTS.

L) PLACE TYPE III BARRICADES, WITH "ROAD CLOSED" SIGN R11-2 ATTACHED, OF SUFFICIENT LENGTH TO CLOSE ENTIRE ROADWAY.

M) INSTALL TEMPORARY PAVEMENT MARKINGS AND TEMPORARY PAVEMENT MARKERS ON INTERIM LAYERS OF PAVEMENT AS FOLLOWS:

ROAD NAME	MARKING	MARKER
-L- (TURKEY CREEK RD)	PAINT	NONE

N) PLACE ONE APPLICATION OF PAINT FOR TEMPORARY TRAFFIC PATTERNS. PLACE A SECOND APPLICATION OF PAINT SIX (6) MONTHS AFTER THE INITIAL APPLICATION AND EVERY SIX MONTHS AS DIRECTED BY THE ENGINEER.

O) TIE PROPOSED PAVEMENT MARKING LINES TO EXISTING PAVEMENT MARKING LINES.

P) REMOVE/REPLACE ANY CONFLICTING/DAMAGED PAVEMENT MARKINGS AND MARKERS BY THE END OF EACH DAY'S OPERATION.

MISCELLANEOUS

Q) IN THE EVENT A TIE-IN CANNOT BE MADE IN ONE DAY'S TIME, BRING THE TIE-IN AREA TO AN APPROPRIATE ROADWAY ELEVATION AS DETERMINED BY THE ENGINEER. PLACE BLACK ON ORANGE "LOOSE GRAVEL" SIGNS (W8-7) AND BLACK ON ORANGE "PAVEMENT ENDS" SIGNS (W8-3) 200 ft AND 400 ft RESPECTIVELY IN ADVANCE OF THE UNEVEN AREAS. USE DRUMS TO DELINEATE THE EDGE OF ROADWAY ALONG UNPAVED AREAS.

TEMPORARY SHORING

FOR TEMPORARY SHORING, SEE TEMPORARY SHORING PROVISION.

FOR CONTRACTOR DESIGNED SHORING, SURVEY THE SHORING LOCATION TO DETERMINE EXISTING ELEVATIONS AND ACTUAL DESIGN HEIGHTS BEFORE BEGINNING DESIGN.

NO SUBSURFACE INFORMATION IS AVAILABLE IN THE VICINITY OF THE TEMPORARY SHORING FROM STATION -L- 11+97+/- TO STATION 12+38+/- RIGHT. THE INFORMATION PROVIDED FOR DESIGN WAS ASSUMED AND MAY NOT BE APPLICABLE TO THE ACTUAL SITE CONDITIONS ENCOUNTERED DURING CONSTRUCTION.

APPROVED: Dean Hatfield DATE: 6/3/13

SEAL

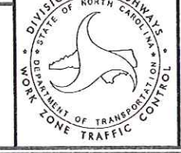

TRANSPORTATION OPERATIONS PLAN

5/31/2013 10:16:55 AM
G:\CR Projects\CR1100 - NCDOT Group W\430216\Roadway\Proj\430216_RDY_06_TMP1B.dgn
1100 rdirpmrs.tbl

PROJ. REFERENCE NO.	SHEET NO.
17BP.14.R.10	TMP-2

PROJECT PHASING

MAINTAIN ACCESS TO -DWY1- AND -DWY2- AT ALL TIMES.

PHASE I

STEP 1:
INSTALL ADVANCE WORK ZONE WARNING SIGNS USING RDWY STD 1101.01, SHEET 3 OF 3.

STEP 2:
USING RDWY STD 1101.02, SHEET 1 OF 15, IN ONE WORK PERIOD, INSTALL BARRELS AND ADDITIONAL SIGNS FOR TEMPORARY LANE CLOSURE AND SHIFT TRAFFIC TO THE TEMPORARY ONE LANE, TWO WAY PATTERN.

STEP 3:
USING RDWY STD 1101.02, SHEET 1 OF 15, PERFORM THE FOLLOWING ON SR 1380:

- CONSTRUCT PHASE I OF PROPOSED BRIDGE. (SEE STRUCTURE PLANS)
- CONSTRUCT -DWY1- AND PHASE I OF PROPOSED ROADWAY FROM -L- STA 11+50+/- TO -L- STA 12+80+/- UP TO, BUT NOT INCLUDING, FINAL LAYER OF SURFACE COURSE.
- CONSTRUCT TEMPORARY SHORING BEHIND PORTABLE CONCRETE BARRIER FROM -L- STA 11+97 +/- TO -L- STA 12+10 +/-, FROM -L- STA 12+25 +/- TO -L- STA 12+38 +/-. (SEE SHEET TMP-3)

STEP 4:
USING FLAGGERS, RDWY STD 1101.02, SHEET 1 OF 15, IN ONE WORK PERIOD CONSTRUCT TIE INS FROM -L- STA 10+60+/- TO -L- STA 11+50+/- AND FROM -L- STA 12+80+/- TO -L- STA 13+70+/-.

INSTALL PORTABLE CONCRETE BARRIER FROM -L- STA 11+95+/- TO -L- STA 12+25+/- AND CRASH CUSHIONS. (SEE SHEET TMP-4)

PLACE TEMPORARY PAVEMENT MARKINGS (PAINT) ON -L- FOR A TEMPORARY ONE LANE, TWO WAY TRAFFIC PATTERN.

RETAINING ADVANCED WORK ZONE SIGNS, SWITCH TRAFFIC ONTO THE NEWLY CONSTRUCTED SECTION OF SR 1380 AT THE END OF THE WORK PERIOD.

PHASE II

STEP 1:
USING RDWY STD 1101.02 SHEET 1 OF 15, PERFORM THE FOLLOWING ON SR 1380:

- REMOVE THE EXISTING BRIDGE IN ACCORDANCE WITH ROADWAY AND STRUCTURE PLANS.
- CONSTRUCT PHASE II OF PROPOSED BRIDGE. (SEE STRUCTURE PLANS)
- CONSTRUCT -DWY2- AND PHASE II OF PROPOSED ROADWAY FROM -L- STA. 10+60+/- TO STA. 13+70+/-, UP TO, BUT NOT INCLUDING THE FINAL LAYER OF SURFACE COURSE. (SEE SHEET TMP-4)
- USING FLAGGERS, RDWY STD 1101.02, SHEET 1 OF 15, IN ONE WORK PERIOD, REMOVE PORTABLE CONCRETE BARRIER AND CRASH CUSHIONS. PLACE THE FINAL LAYER OF SURFACE COURSE AND FINAL PAVEMENTEMENT MARKINGS ON PROPOSED -L- FROM STA 10+60+/- TO STA 13+70+/-. SHIFT TRAFFIC TO NEWLY CONSTRUCTED BRIDGE AND ROADWAY AT THE END OF THAT WORK PERIOD.

STEP 2:
COMPLETE REMOVAL OF ANY REMAINING ROADWAY AND STRUCTURE. REMOVE ALL TEMPORARY TRAFFIC CONTROL DEVICES AND OPEN -L- TO THE FINAL PATTERN.

APPROVED: Dan Hayes DATE: 6/3/13

SEAL

NORTH CAROLINA PROFESSIONAL SEAL 16003 ENGINEER DEAN D. HAYES

DIVISION OF HIGHWAYS STATE OF NORTH CAROLINA DEPARTMENT OF TRANSPORTATION WORK ZONE TRAFFIC CONTROL

TEMPORARY TRAFFIC CONTROL PHASING

5/23/2013 10:35:17 AM
G:\GR Projects\OR1100 - NCDOT Group W\430216\Roadway\Proj\430216_RDY_06_TMP2.dgn
1100_rdy-pmp.tbl

PROJ. REFERENCE NO.	SHEET NO.
17BP.14.R.10	TMP-3

①

②

③

R11-2
48" x 30"

TYPE III BARRICADE

④

⑤

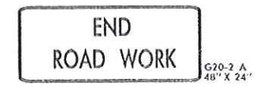

⑥

NAD 83/NSRS 2007

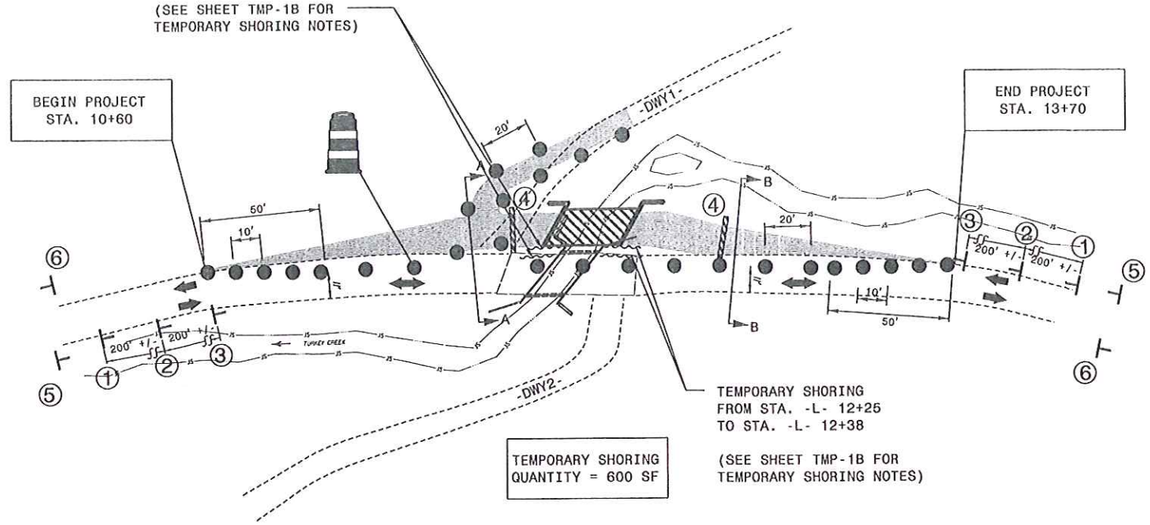

NOTES:
1. FOR CONSTRUCTION PHASING NOTES, SEE SHEET TMP-2
2. ALL SIGN LOCATIONS ARE APPROXIMATE.
3. SEE ROADWAY STANDARD DRAWING NO. 1101.01, SHEET 3 OF 3 FOR LOCATION OF SIGNS 5 & 6 AND APPLICABLE NOTES.

SECTION A-A

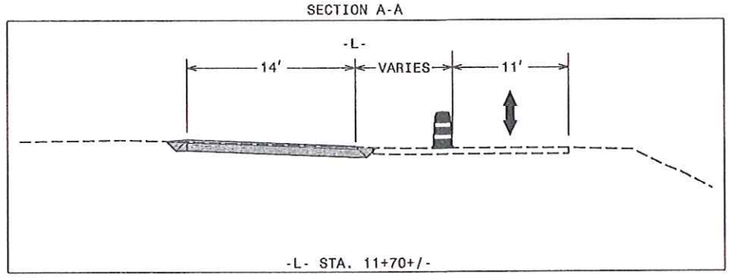

SECTION B-B

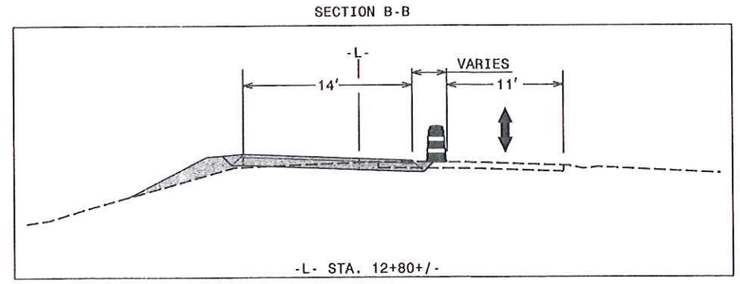

TEMPORARY SHORING DETAIL

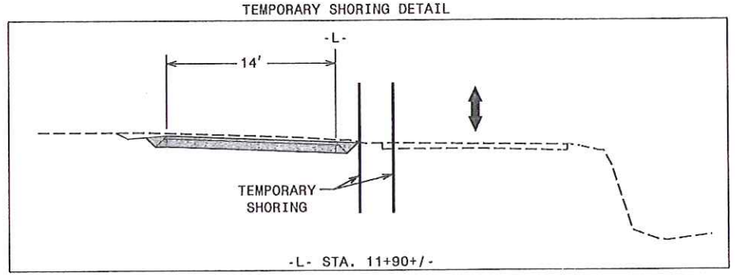

THE LOUIS BERGER GROUP, Inc.
1001 Wade Avenue, Suite 400
Raleigh, North Carolina 27605

APPROVED: Dean Hatfield DATE: 6/3/13

SEAL

TEMPORARY TRAFFIC CONTROL PHASE I

5/31/2013 10:47:03 AM
G:\DR Projects\DR1100 - NCDOT Group W\430216\Roadway\Proj\430216_RDY_06_TMP3.dgn
1100_rdy-pmp.tbl

PROJ. REFERENCE NO.	SHEET NO.
17BP.14.R.10	TMP-4

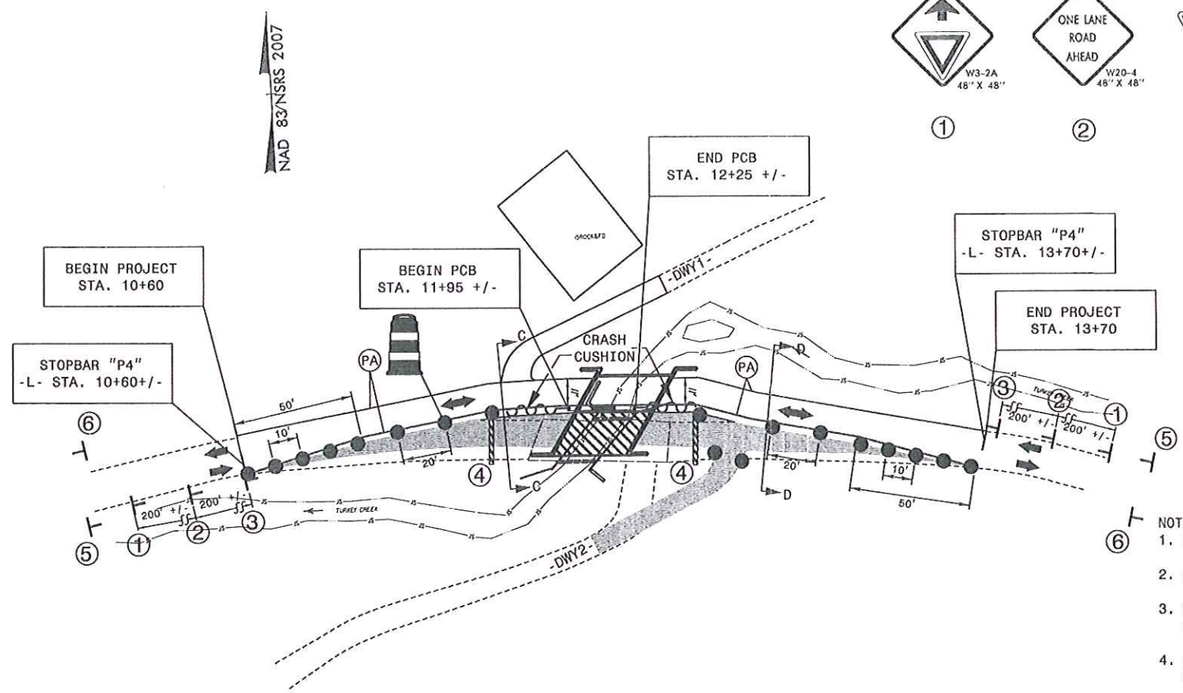

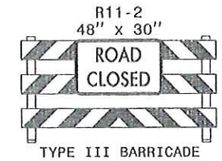

TYPE III BARRICADE

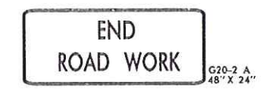

NOTES:
1. FOR CONSTRUCTION PHASING NOTES, SEE SHEET TMP-2
2. ALL SIGN LOCATIONS ARE APPROXIMATE.
3. SEE ROADWAY STANDARD DRAWING NO. 1101.01, SHEET 3 OF 3 FOR LOCATION OF SIGNS 5 & 6 AND APPLICABLE NOTES.
4. ALL PCB SECTIONS CROSSING BRIDGE SHALL BE FULLY ANCHORED. SEE STRUCTURES PLANS FOR DETAIL.

SECTION C-C

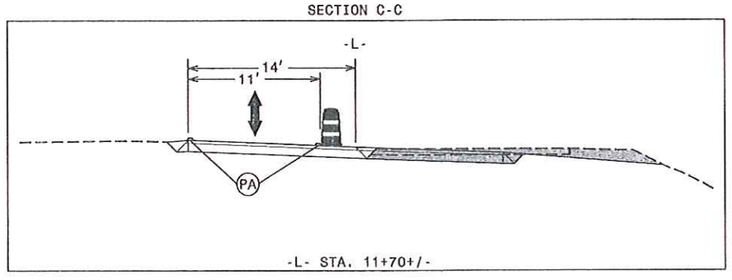

-L- STA. 11+70+/-

SECTION D-D

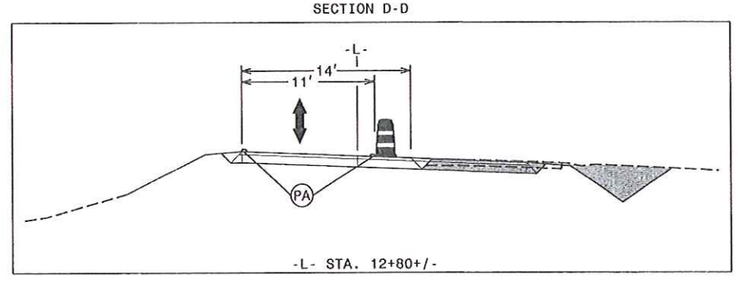

-L- STA. 12+80+/-

THE LOUIS BERGER GROUP, Inc.
1001 Wade Avenue, Suite 400
Raleigh, North Carolina 27605

APPROVED: Dean Hatfield DATE: 6/3/13

SEAL

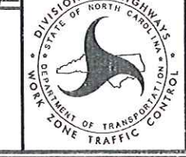

TEMPORARY TRAFFIC CONTROL PHASE II

5/3/2013 3:55:14 PM
C:\OR Projects\OR1100 - NCDOT Group W\430216\Roadway\Proj\430216_RDY_06_TMP4.dgn
1100_rdu-pmp.tbl

STATE	PROJECT NO.	SHEET NO.	TOTAL SHTS.
N.C.	17BP.14.R.10	PMP-1	2

APPROVED: 6/3/13
DATE: Dean Hatfield

SEAL

NORTH CAROLINA PROFESSIONAL SEAL 16003 ENGINEER DEAN D. HATFIELD

STATE OF NORTH CAROLINA
DEPARTMENT OF TRANSPORTATION

PAVEMENT MARKING PLANS

LOCATION: BRIDGE NO. 216 ON SR 1380 OVER TURKEY CREEK

ROADWAY STANDARD DRAWINGS

THE FOLLOWING ROADWAY STANDARDS AS APPEAR IN "ROADWAY STANDARD DRAWINGS"-ROADWAY DESIGN UNIT-N.C. DEPARTMENT OF TRANSPORTATION-RALEIGH, N.C., DATED JANUARY 2012 ARE APPLICABLE TO THIS PROJECT AND BY REFERENCE HEREBY ARE CONSIDERED A PART OF THESE PLANS:

STD. NO.	TITLE
1205.01	PAVEMENT MARKINGS - LINE TYPES & OFFSETS
1205.02	PAVEMENT MARKINGS - 2 LANE & MULTILANE ROADWAYS
1205.12	PAVEMENT MARKINGS - BRIDGES

PAVEMENT MARKING SCHEDULE

ASPHALT PAVEMENT DESIGN
(AS SHOWN)

PAVEMENT MARKING LINES

PA - PAINT - WHITE EDGELINE (4")
PI - PAINT - YELLOW DOUBLE CENTER LINE (4")

GENERAL NOTES

THE FOLLOWING NOTES APPLY AT ALL TIMES FOR THE DURATION OF THE CONSTRUCTION PROJECT, EXCEPT WHEN NOTED IN THE PLAN, OR DIRECTED BY THE ENGINEER.

A) INSTALL PAVEMENT MARKINGS AND PAVEMENT MARKERS ON THE FINAL SURFACE AS FOLLOWS:

ASPHALT PAVEMENT DESIGN:

ROAD NAME	MARKING	MARKER
ALL	PAINT	NONE
BRIDGE	PAINT	NONE

INDEX

SHEET NO.	DESCRIPTION
PMP-1	PAVEMENT MARKING PLAN COVER SHEET
PMP-2	PAVEMENT MARKING DETAIL

THE LOUIS BERGER GROUP, Inc.
1001 Wade Avenue, Suite 400
Raleigh, NC 27605-3322

ROADWAY PLANS

5/3/2013 3:55:20 PM
G:\DR Projects\DR1108 - NCDOT Group W\430216\Roadway\Proj\430216_RDY_07_PMP_01.dgn
11W8_rdy_pmp.tbl

STATE	PROJECT NO.	SHEET NO.	TOTAL SHTS.
N.C.	17BP.14.R.10	PMP-2	2

APPROVED: 6/3/13

DATE: Dean Hatfield

SEAL

NORTH CAROLINA PROFESSIONAL SEAL 16003 ENGINEER DEAN D. HATFIELD

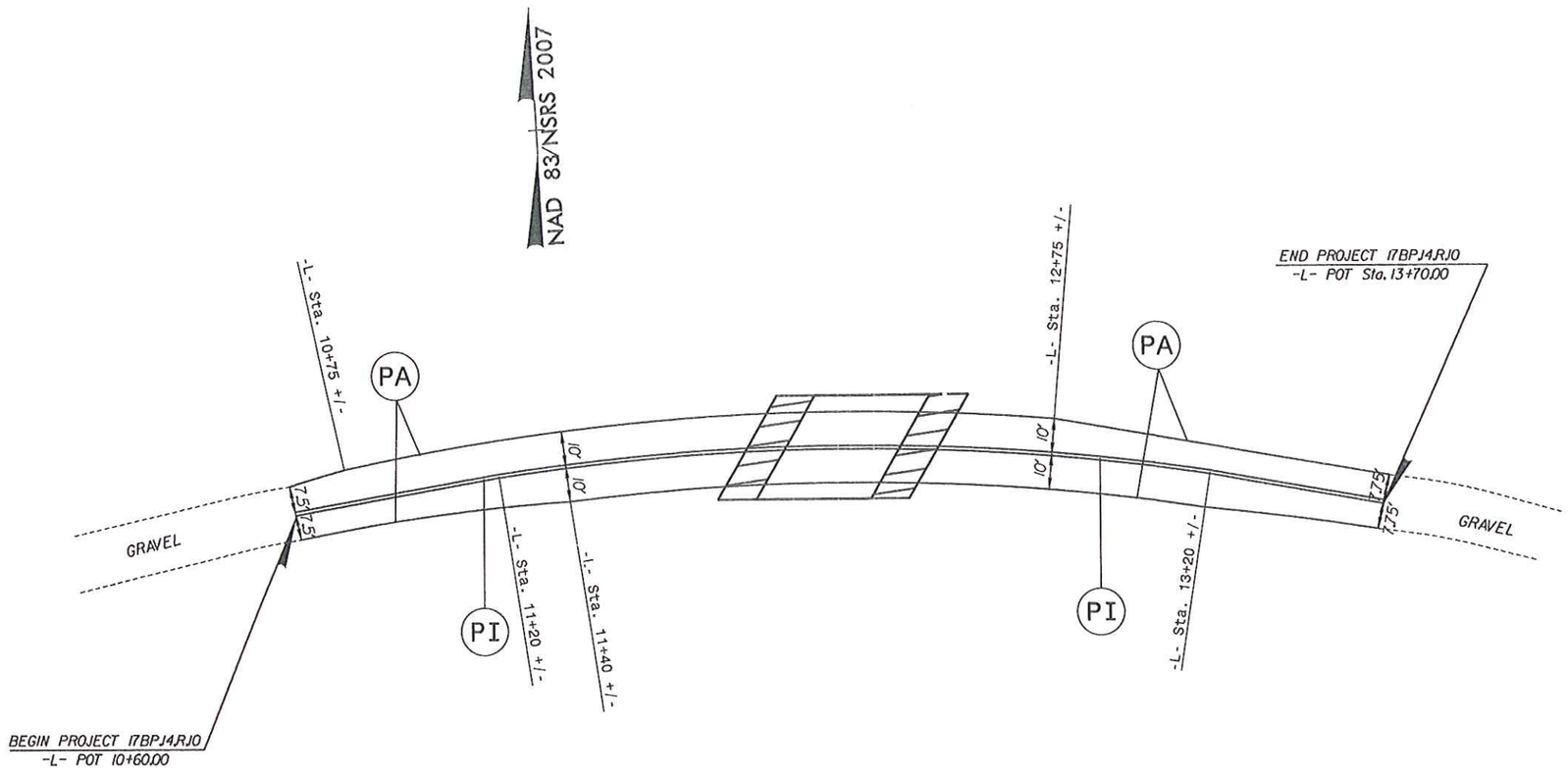

LEGEND

(PA) - PAINT - WHITE EDGELINE (4")

(PI) - PAINT - YELLOW DOUBLE CENTER LINE (4")

PAVEMENT MARKING DETAIL
TURKEY CREEK RD.

THE LOUIS BERGER GROUP, Inc.
1001 Wade Avenue, Suite 400
Raleigh, NC 27605-3322

ROADWAY PLANS

5/3/2013 3:55:26 PM
G:\DR Projects\DR1103 - NCDOT Group W\430216\Roadway\Proj\430216_RDY_07_PMP_02.dgn
1100_rdy-pmp.tbl

0' 20' 40'	PROJECT REFERENCE NO.	SHEET NO.
	17BP.14.R.10	EC-01/CONST.04
	R/W SHEET NO.	

EROSION CONTROL PLANS

NOTE: ANY DEVIATION FROM OPTIONS GIVEN WILL REQUIRE PRIOR APPROVAL BY ENGINEER.

ADDITIONAL EROSION CONTROL DEVICES MAY NEED TO BE INSTALLED AS DIRECTED BY THE ENGINEER.

Std. #	Description	Symbol
1605.01	Temporary Silt Fence	
1606.01	Special Sediment Control Fence	
1632.03	Rock Inlet Sediment Trap Type C	
1633.01	Temporary Rock Silt Check Type-A	
	Temporary Rock Silt Check Type-A with Matting and Polyacrylamide (PAM)	

2012 STANDARD DRAWINGS

1604.01	Railroad Erosion Control Detail	1632.01	Rock Inlet Sediment Trap Type A
1605.01	Temporary Silt Fence	1632.02	Rock Inlet Sediment Trap Type B
1606.01	Special Sediment Control Fence	1632.03	Rock Inlet Sediment Trap Type C
1607.01	Gravel Construction Entrance	1633.01	Temporary Rock Silt Check Type A
1622.01	Temporary Berms and Slope Drains	1633.02	Temporary Rock Silt Check Type B
1630.01	Riser Basin	1634.01	Temporary Rock Sediment Dam Type A
1630.02	Silt Basin Type B	1634.02	Temporary Rock Sediment Dam Type B
1630.03	Temporary Silt Ditch	1635.01	Rock Pipe Inlet Sediment Trap Type A
1630.04	Stilling Basin	1635.02	Rock Pipe Inlet Sediment Trap Type B
1630.05	Temporary Diversion	1640.01	Coir Fiber Baffle
1630.06	Special Stilling Basin	1645.01	Temporary Stream Crossing
1631.01	Matting Installation		

ROADSIDE ENVIRONMENTAL UNIT
DEPARTMENT OF TRANSPORTATION
DIVISION OF HIGHWAYS
RALEIGH, N.C.

2012 STANDARD SPECIFICATIONS

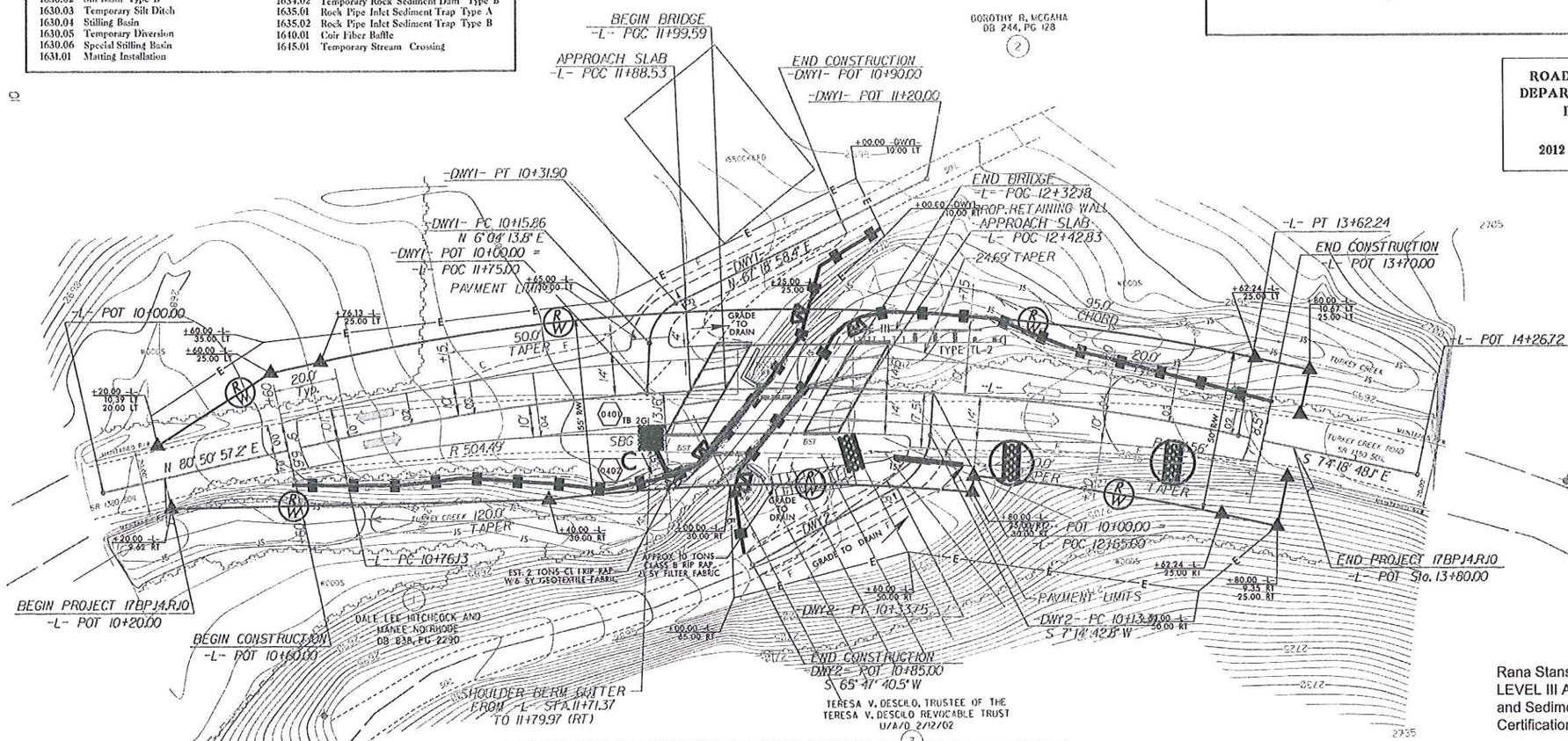

Rana Stansell, PE
LEVEL III A: Designer of Erosion and Sediment Control Plans
Certification Number: 635

Environmentally Sensitive Areas:

This project is located in an "Environmentally Sensitive Area." This designation requires special procedures to be used for clearing and grubbing, temporary stream crossings, and grading operations within the area identified on the plans. This also requires special procedures to be used for seeding and mulching and staged seeding within the project.

Clearing and Grubbing:

In areas identified on the erosion control plans as "Environmentally Sensitive Areas", the Contractor may perform clearing operations, but not grubbing operations until immediately prior to beginning grading operations as described in Section 200, Article 200-1, in the Standard Specifications. The "Environmentally Sensitive Area" shall be defined as a 50 foot buffer zone on both sides of the stream (or depression), measured from top of streambank, (or center of depression). Only clearing operations (not grubbing) shall be allowed in this buffer zone until immediately prior to beginning grading operations. Erosion control devices shall be installed immediately following the clearing operation.

Grading:

Once grading operations begin in identified "Environmentally Sensitive Areas", work will progress in a continuous manner until complete. All construction within these areas must progress in a continuous manner such that each phase is complete and areas permanently stabilized prior to beginning of next phase. Failure on the part of the Contractor to complete any phase of construction in a continuous manner in "Environmentally Sensitive Areas" as specified will be just cause for the Engineer to direct the suspension of work in accordance with Section 108-7 of the Standard Specifications.

Temporary Stream Crossings:

Any crossing of streams within the limits of this project must be accomplished in accordance with Section 107-13(b) of the Standard Specifications.

Seeding and Mulching:

Seeding and mulching shall be performed in accordance with Section 1660 of the Standard Specifications and vegetative cover sufficient to restrain erosion shall be installed immediately following grade establishment.

Seeding and mulching shall be performed on the areas disturbed by construction immediately following final grade establishment. No appreciable time shall lapse into the contract time without stabilization of slopes, ditches and other areas within the "Environmentally Sensitive Areas" as indicated on the erosion control plans.

Stage Seeding:

The work covered by this section shall consist of the establishment of a vegetative cover on cut and fill slopes as grading progresses. Seeding and mulching shall be done in stages on cut and fill slopes which are greater than 20 feet in height measured along the slope, or greater than 2 acres in area. Each stage shall not exceed the limits stated above.

ENVIRONMENTALLY SENSITIVE AREA
PLEASE SEE NOTE
NOTE: ENTIRE PROJECT IS WITHIN ENVIRONMENTALLY SENSITIVE AREA. HATCHING NOT SHOWN.

SEE SHEET 5 FOR PROFILE

THE LOUIS BERGER GROUP, Inc.
1001 Wade Avenue, Suite 400
Raleigh, NC 27605-3322

ROADWAY PLANS

REVISIONS

5/23/2013 3:55:30 PM
G:\DR Projects\DR1100 - NCDOT Group W\430216\Roadway\Proj\430216_RDY_08_EC_01.dgn
G:\CADD\Plot\DR1100\1100_rdy_EC.tbl

STATE OF NORTH CAROLINA
DIVISION OF HIGHWAYS

SOIL STABILIZATION TIMEFRAMES

SITE DESCRIPTION	STABILIZATION TIME	TIMEFRAME EXCEPTIONS
PERIMETER DIKES, SWALES, DITCHES AND SLOPES	7 DAYS	NONE
HIGH QUALITY WATER (HQW) ZONES	7 DAYS	NONE
SLOPES STEEPER THAN 3:1	7 DAYS	IF SLOPES ARE 10' OR LESS IN LENGTH AND ARE NOT STEEPER THAN 2:1, 14 DAYS ARE ALLOWED.
SLOPES 3:1 OR FLATTER	14 DAYS	7 DAYS FOR SLOPES GREATER THAN 50' IN LENGTH.
ALL OTHER AREAS WITH SLOPES FLATTER THAN 4:1	14 DAYS	NONE, EXCEPT FOR PERIMETERS AND HQW ZONES.

PROJECT REFERENCE NO.	SHEET NO.
17BP.14.R.10	EC-03

TEMPORARY ROCK SILT CHECK TYPE 'A' WITH EXCELSIOR MATTING AND POLYACRYLAMIDE (PAM)

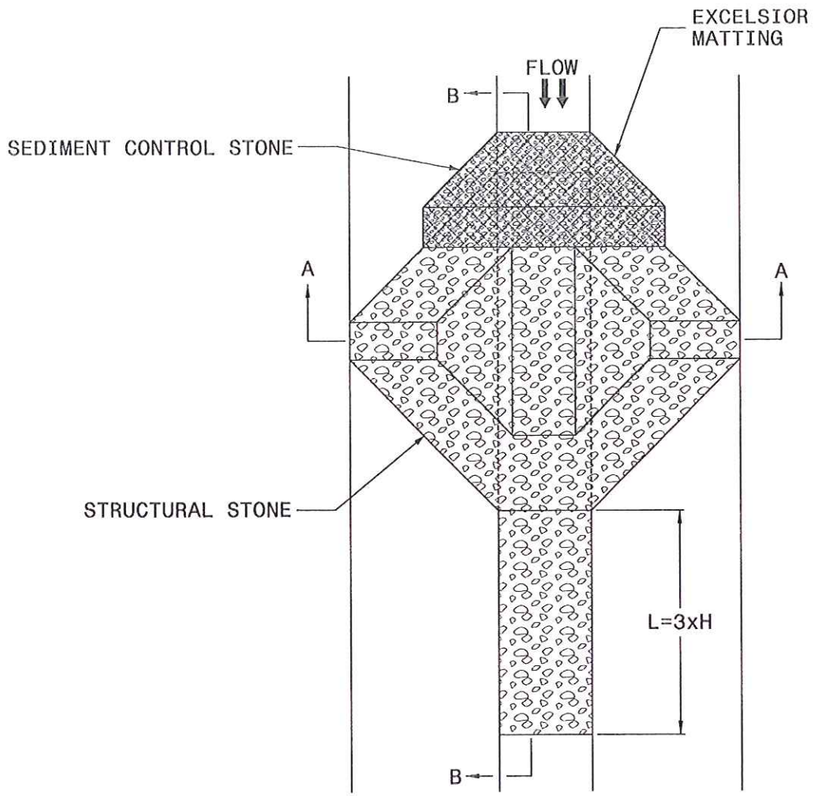

PLAN

NOTES

USE EXCELSIOR FOR MATTING MATERIAL AND ANCHOR MATTING SECTION AT TOP AND BOTTOM WITH CLASS B STONE.

PRIOR TO POLYACRYLAMIDE (PAM) APPLICATION, OBTAIN A SOIL SAMPLE FROM PROJECT LOCATION, AND FROM OFFSITE MATERIAL, AND ANALYZE FOR APPROPRIATE PAM FLOCCULANT TO BE APPLIED TO EACH ROCK SILT CHECK.

INITIALLY APPLY 3.5 OUNCES OF POLYACRYLAMIDE (PAM) TO TOP OF MATTING SECTION AND AFTER EVERY RAINFALL EVENT THAT EQUALS OR EXCEEDS 0.50 INCHES.

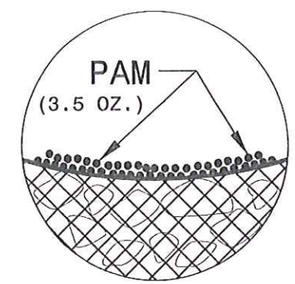

INSET A

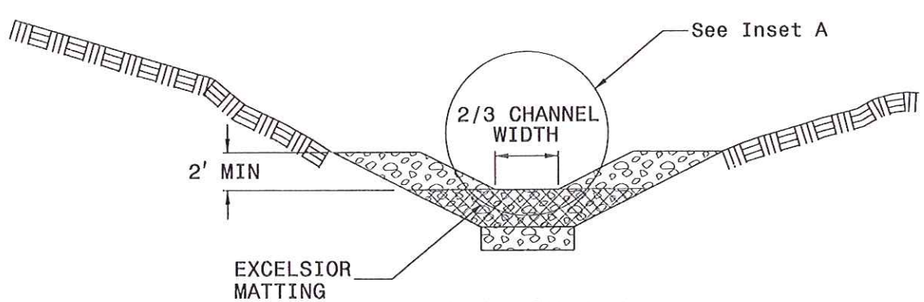

SECTION A-A

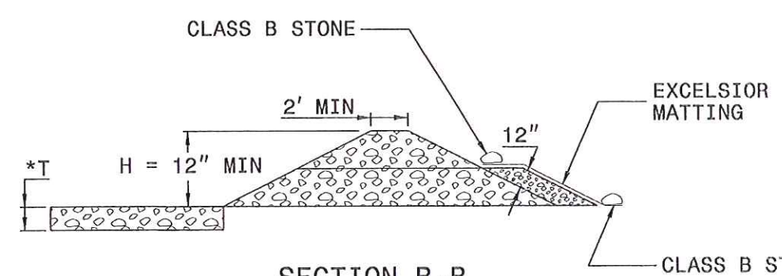

SECTION B-B

*T = 12" MIN., 18" MAX.

NOT TO SCALE

THE LOUIS BERGER GROUP, Inc.
1001 Wade Avenue, Suite 400
Raleigh, NC 27605-3322

ROADWAY PLANS

REVISIONS

5/3/2013 3:55:39 PM
G:\OR Projects\OR1100 - NCDOT Group W\430216\Roadway\Proj\430216_RDY_08_EC_03.dgn
G:\CADD\Plot\OR1100\1100_rdy_EC.tbl

17BP.14.R.10
CROSS SECTIONS

INDEX OF SHEETS

TITLE	STATION	SHEET NO.
CROSS-SECTION INDEX		X-1
CROSS-SECTION SUMMARY		X-1A
-L- CROSS-SECTIONS	10+60 - 13+60	X-2 THROUGH X-7
-DWY1- CROSS-SECTIONS	10+00 - 11+10	X-8 THROUGH X-9
-DWY2- CROSS-SECTIONS	10+00 - 10+80	X-10 THROUGH X-11

NOTE: Approximate quantities only. Unclassified Excavation, Fine Grading, and Clearing and Grubbing will be paid for at the contract lump sum price for "Grading".

8/23/99
5/2/2013 3:44:46 PM
G:\DR "Projects\DR1100 - NCDOT Group W\430216\Roadway\XSC\430216_RDY_XPL_001.dgn

PROJ. REFERENCE NO.	SHEET NO.
17BP.14.R.10	X-1A

STATE OF NORTH CAROLINA
DIVISION OF HIGHWAYS

NOTE: EMBANKMENT COLUMN INCLUDES BACKFILL FOR UNDERCUT

CROSS-SECTION SUMMARY

Station L	Uncl. Exc. (cu. yd.)	Embt (cu. yd.)
10+60.00	0	0
10+70.00	6	0
10+80.00	7	0
10+90.00	7	0
11+00.00	8	0
11+10.00	9	0
11+20.00	9	0
11+30.00	10	0
11+40.00	10	0
11+50.00	11	0
11+60.00	12	0
11+70.00	13	0
11+80.00	13	0
11+90.00	14	0
12+40.00	9	16
12+50.00	9	18
12+60.00	7	17
12+70.00	6	15
12+80.00	9	7
12+90.00	8	2
13+00.00	5	1
13+10.00	4	1
13+20.00	4	1
13+30.00	4	0
13+40.00	4	0
13+50.00	5	0
13+60.00	5	0

Station Dwy1	Uncl. Exc. (cu. yd.)	Embt (cu. yd.)
10+20.00	0	0
10+30.00	3	0
10+40.00	3	0
10+50.00	4	0
10+60.00	5	0
10+70.00	5	0
10+80.00	5	0
10+90.00	4	0

Station Dwy2	Uncl. Exc. (cu. yd.)	Embt (cu. yd.)
10+10.00	0	0
10+20.00	6	0
10+30.00	5	0
10+40.00	3	0
10+50.00	2	0
10+60.00	2	0
10+70.00	3	0
10+80.00	3	0

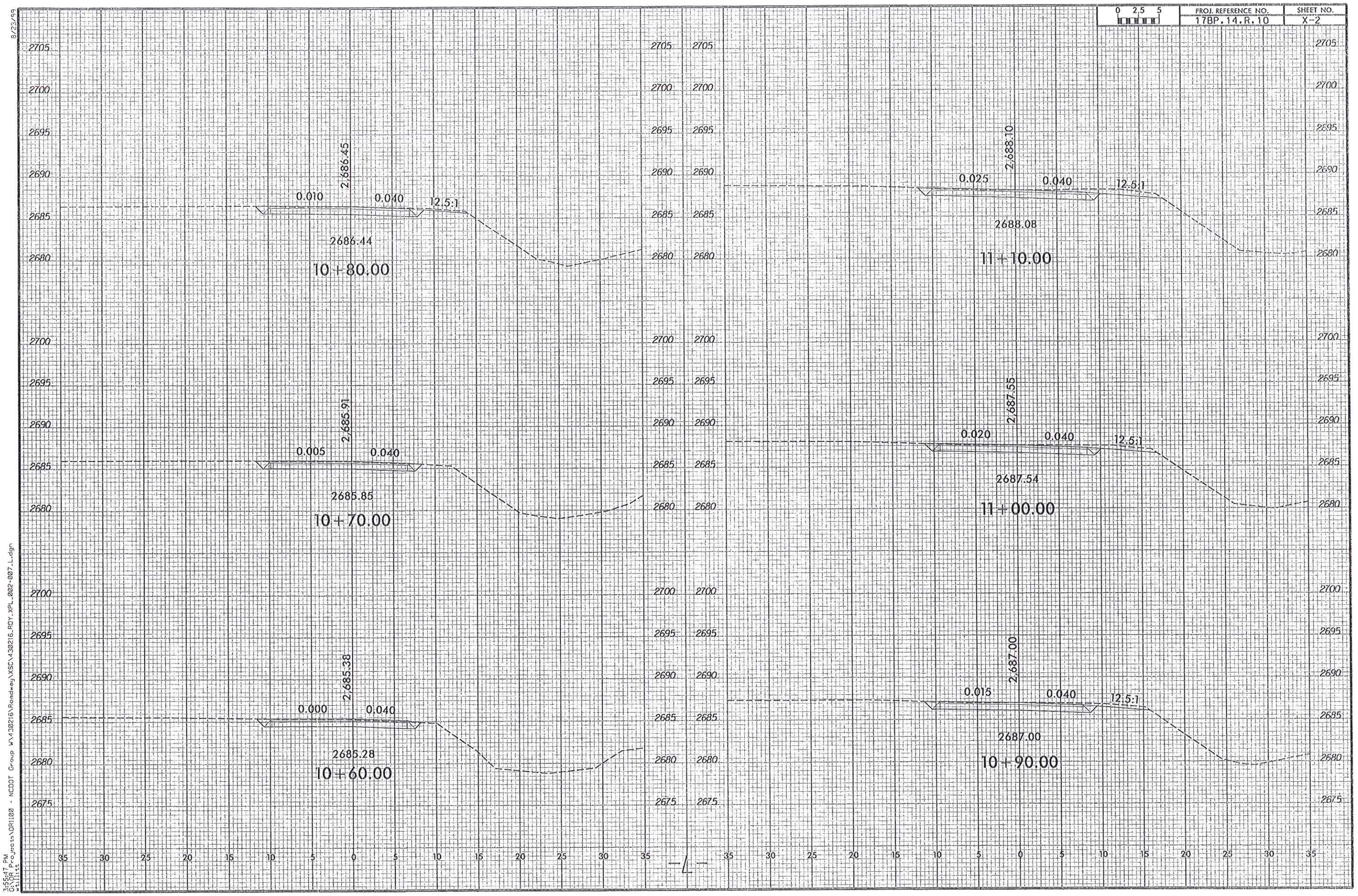
0 2.5 5
PROJ. REFERENCE NO.
17BP.14.R.10
SHEET NO.
X-2
2705
2700
2695
2690
2685
2680
2675
0.010
0.040
12.5:1
2686.45
2686.44
10+80.00
0.005
0.040
2685.91
2685.85
10+70.00
0.000
0.040
2685.38
2685.28
10+60.00
0.025
0.040
12.5:1
2688.10
2688.08
11+10.00
0.020
0.040
12.5:1
2687.55
2687.54
11+00.00
0.015
0.040
12.5:1
2687.00
2687.00
10+90.00
35 30 25 20 15 10 5 0 5 10 15 20 25 30 35
-L-
8/23/99
3:55:47 PM
G:\DR Projects\DR1100 - NCDOT Group W\430216\Roadway\XSC\430216_RDY_XPL_002-007_L.dgn
wellites

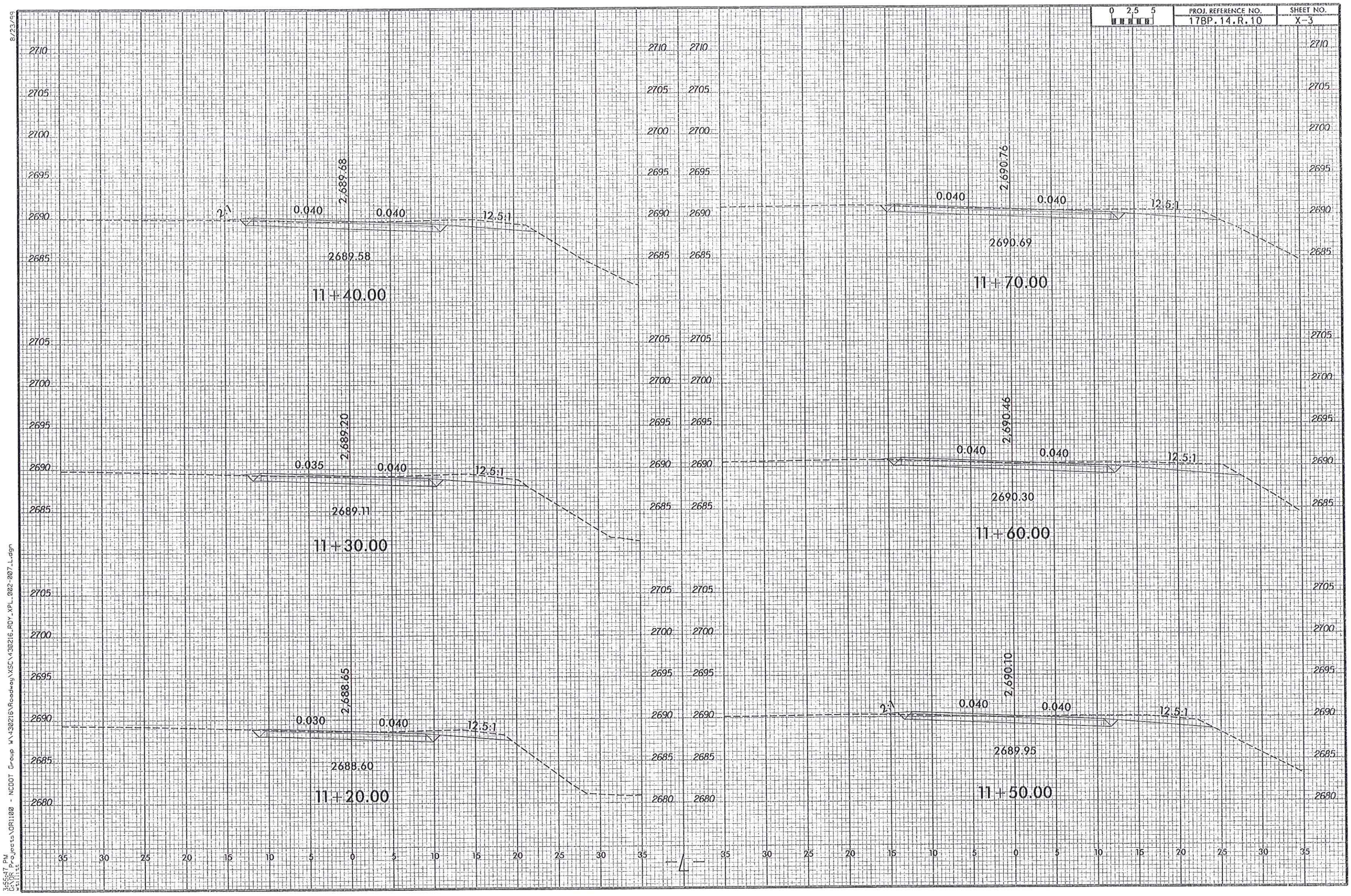

8/23/99

3:55:47 PM
G:\DR Projects\DR1100 - NCDOT Group W\430216\Roadway\XSC\430216_RDY_XPL_002-007_L.dgn
wallise

0 2.5 5	PROJ. REFERENCE NO.	SHEET NO.
	17BP.14.R.10	X-4

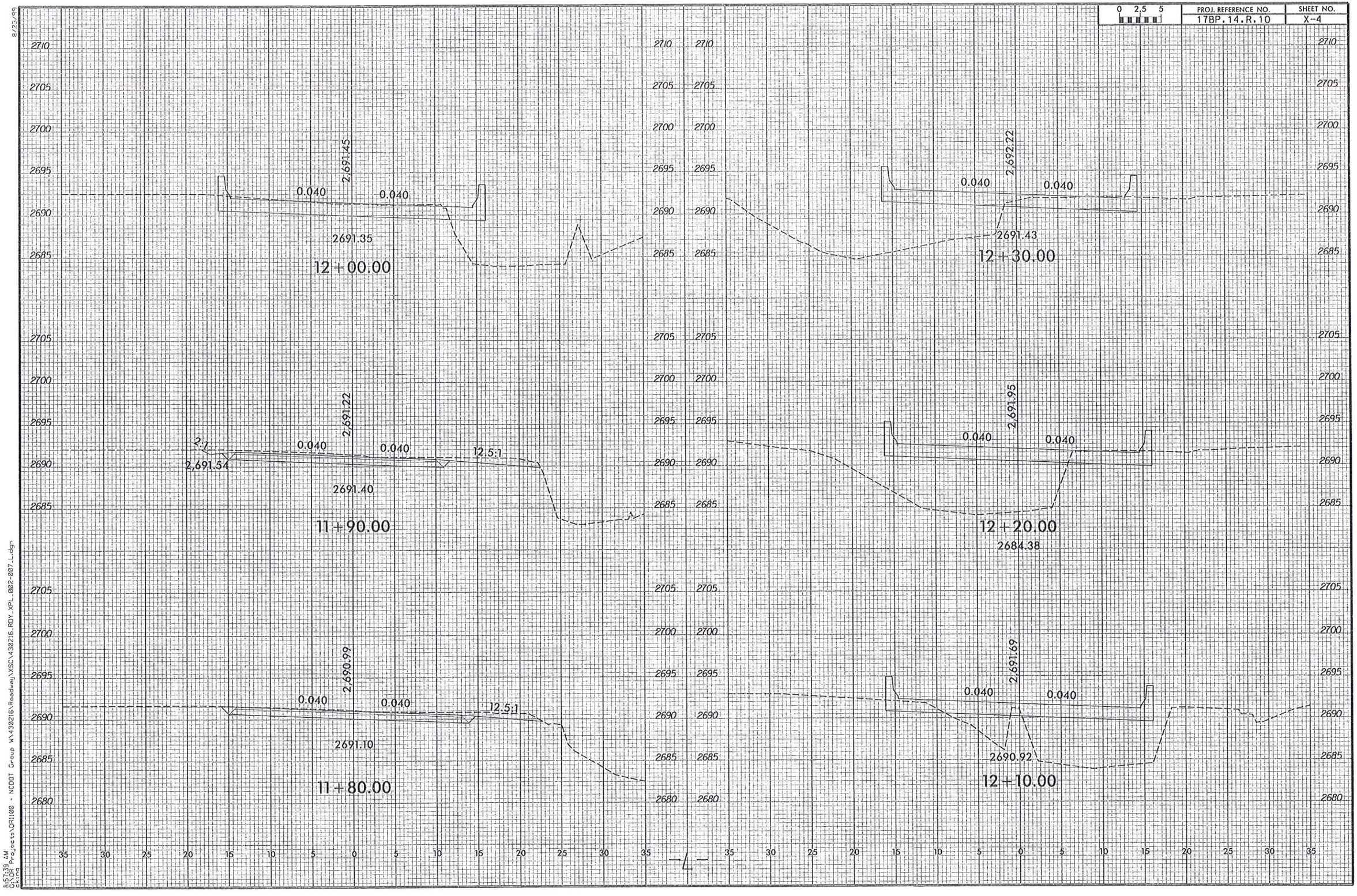

8/25/99

8:57:39 AM
G:\DR Projects\DR1100 - NCDOT Group W\430216\Roadway\WSC\430216_RDY_XPL_002-007_L.dgn
2x1ms

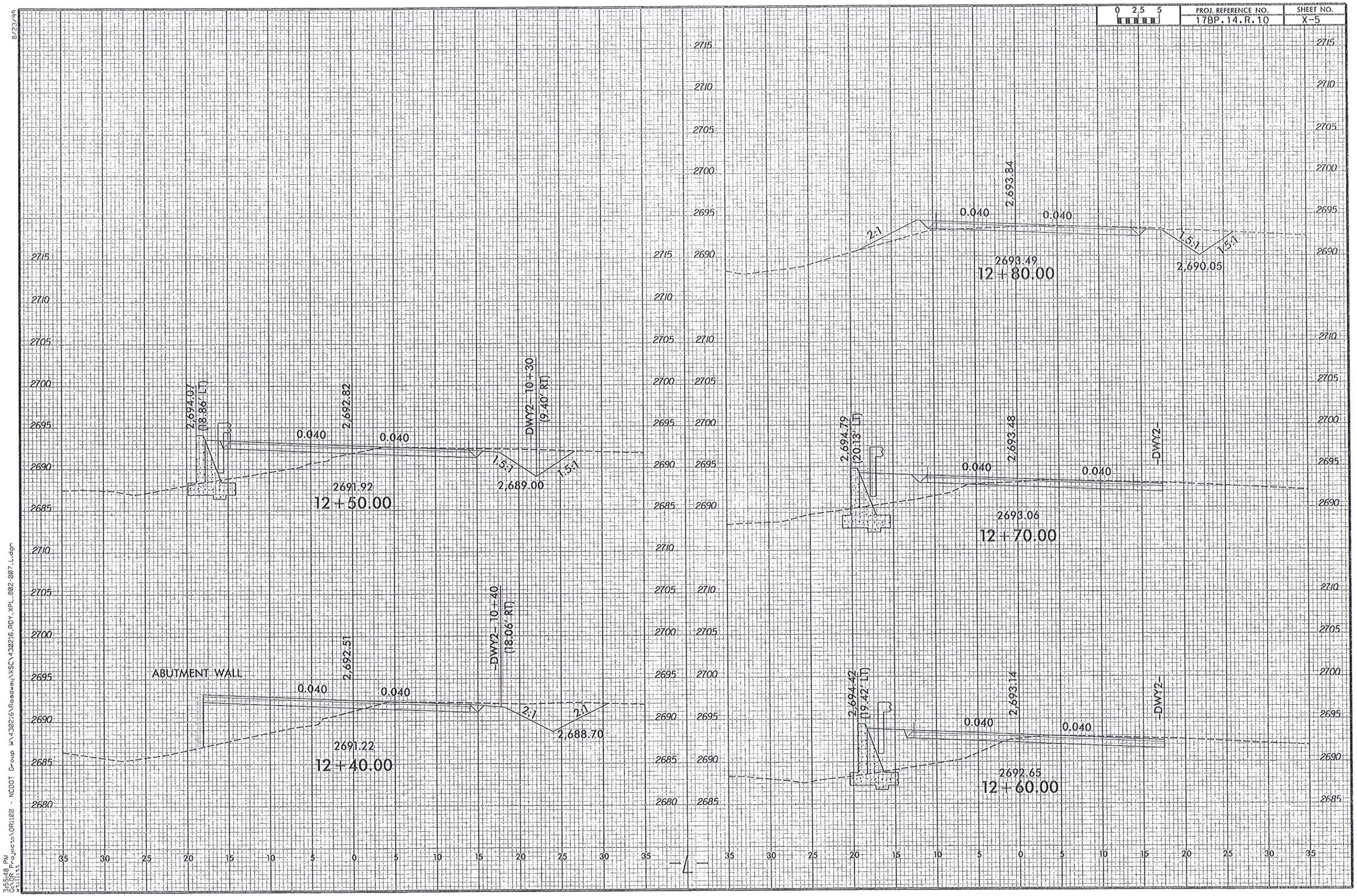
0 2.5 5
PROJ. REFERENCE NO.
17BP.14.R.10
SHEET NO.
X-5
2694.07
(18.86' LT)
2692.82
0.040
0.040
DWY2 10+30
(9.40' RT)
1.5:1
1.5:1
2,689.00
2691.92
12+50.00
2694.79
(20.13' LT)
2693.84
0.040
0.040
2.:1
1.5:1
1.5:1
2693.49
12+80.00
2,690.05
2693.48
0.040
0.040
DWY2
2693.06
12+70.00
ABUTMENT WALL
2692.51
0.040
0.040
DWY2 10+40
(18.06' RT)
2:1
2:1
2,688.70
2691.22
12+40.00
2694.42
(19.42' LT)
2693.14
0.040
0.040
DWY2
2692.65
12+60.00
2715
2710
2705
2700
2695
2690
2685
2680
35 30 25 20 15 10 5 0 5 10 15 20 25 30 35
-L-
8/23/99
3:55:48 PM
G:\DR Projects\DR1120 - NCDOT Group W\430216\Roadway\XSCV430216_RDY_XPL_002-007_L.dgn

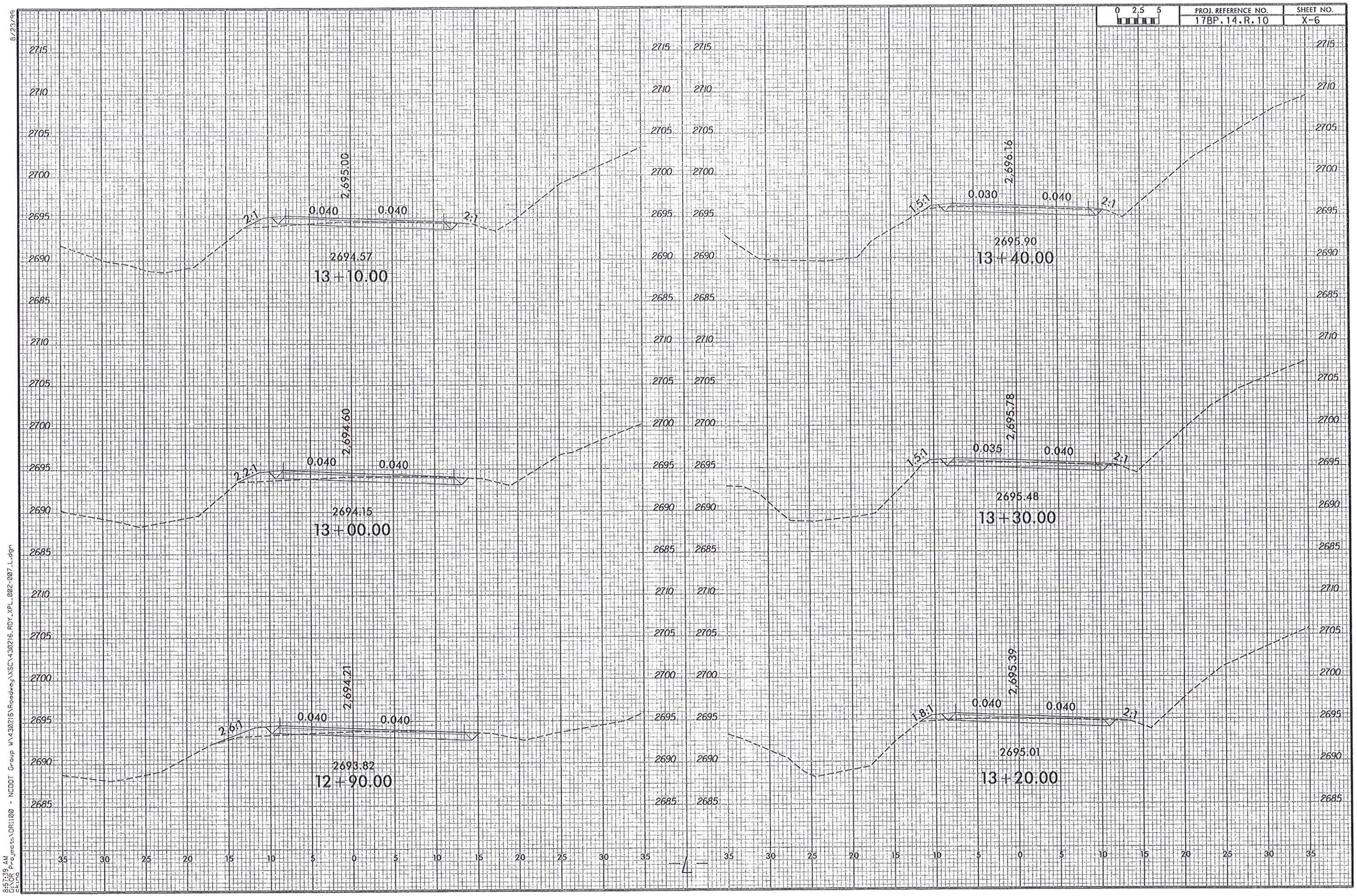
0 2.5 5
PROJ. REFERENCE NO.
17BP.14.R.10
SHEET NO.
X-6
2715
2710
2705
2700
2695
2690
2685
2,695.00
2694.57
13+10.00
2,694.60
2694.15
13+00.00
2,694.21
2693.82
12+90.00
2,696.16
2695.90
13+40.00
2,695.78
2695.48
13+30.00
2,695.39
2695.01
13+20.00
2:1
2.2:1
2.6:1
1.5:1
1.8:1
0.040
0.030
0.035
35 30 25 20 15 10 5 0 5 10 15 20 25 30 35
L
8/23/99
8:57:39 AM
C:\DR Projects\DR1100 - NCDOT Group W\430216\Roadway\XSC\430216_RDY_XPL_002-007_L.dgn
Civil

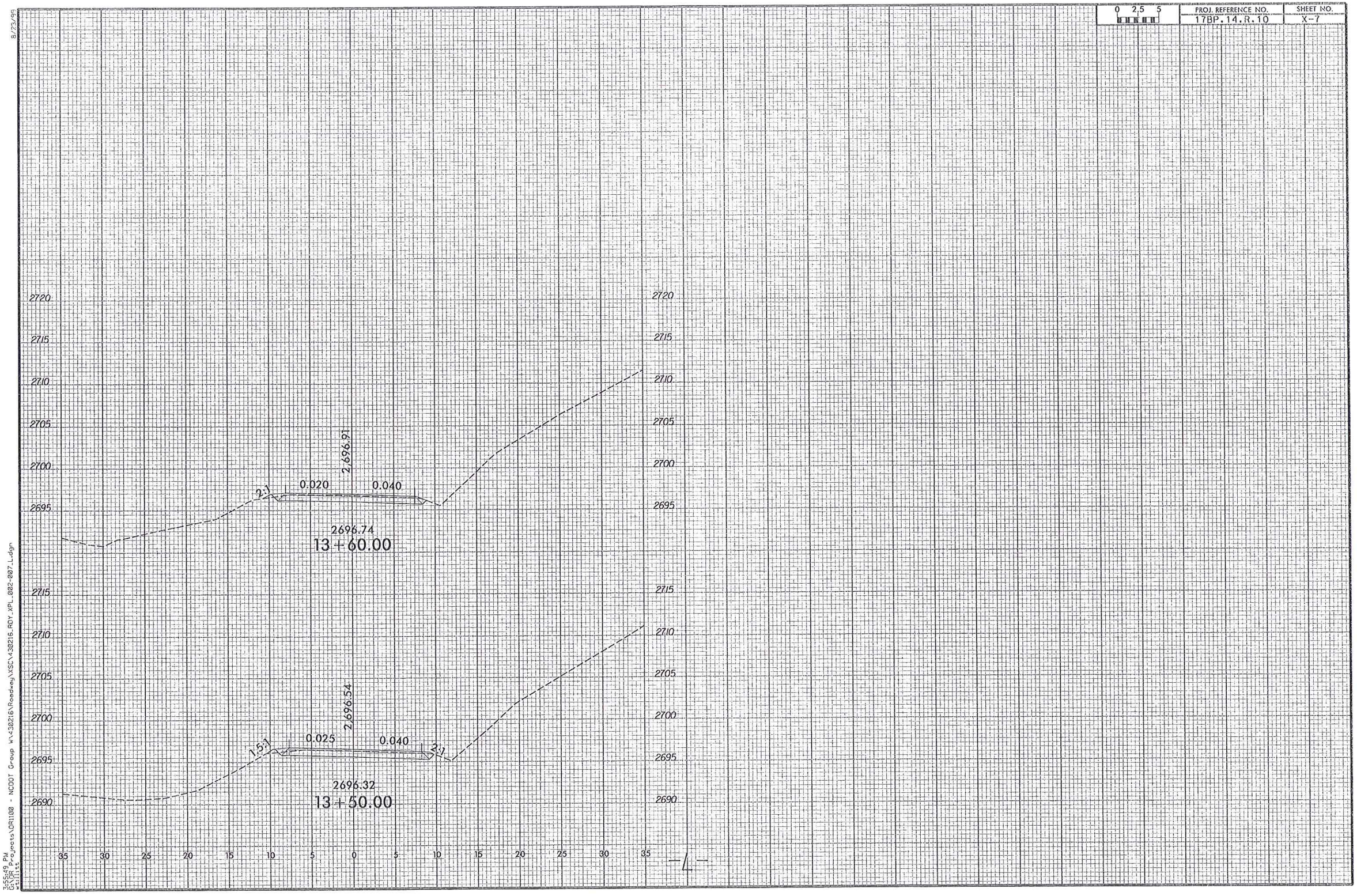

8/23/99
3:55:49 PM
G:\DR Projects\DR1100 - NCDOT Group W\430216\Roadway\XSC\430216_RDY_XPL_002-007_L.dgn
*ELITE

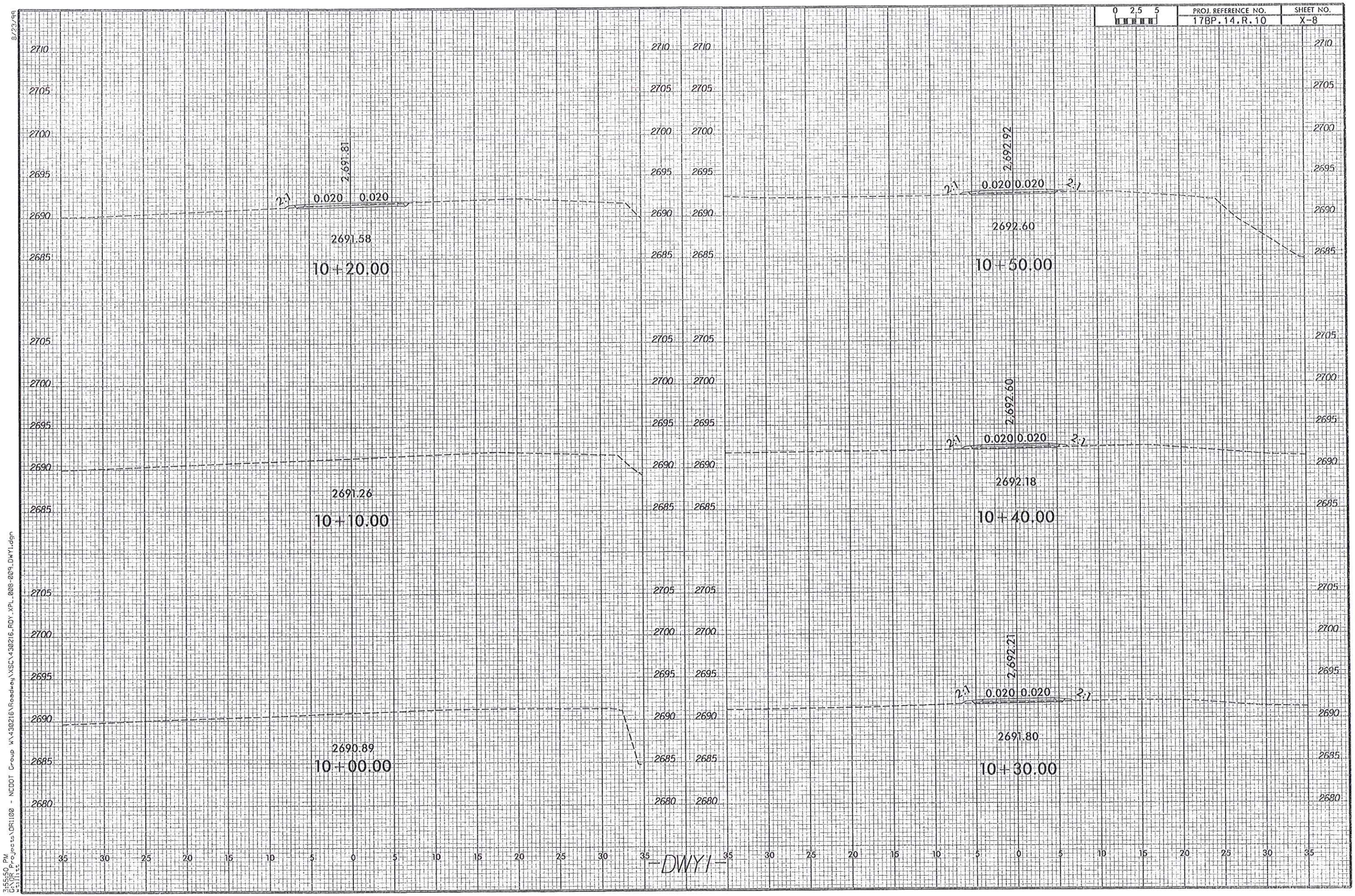

8/23/99
3:55:50 PM
C:\OR Projects\DR1100 - NCDOT Group W\430216\Roadway\XSC\430216_RDY_XPL_008-009_DWY1.dgn
Settings

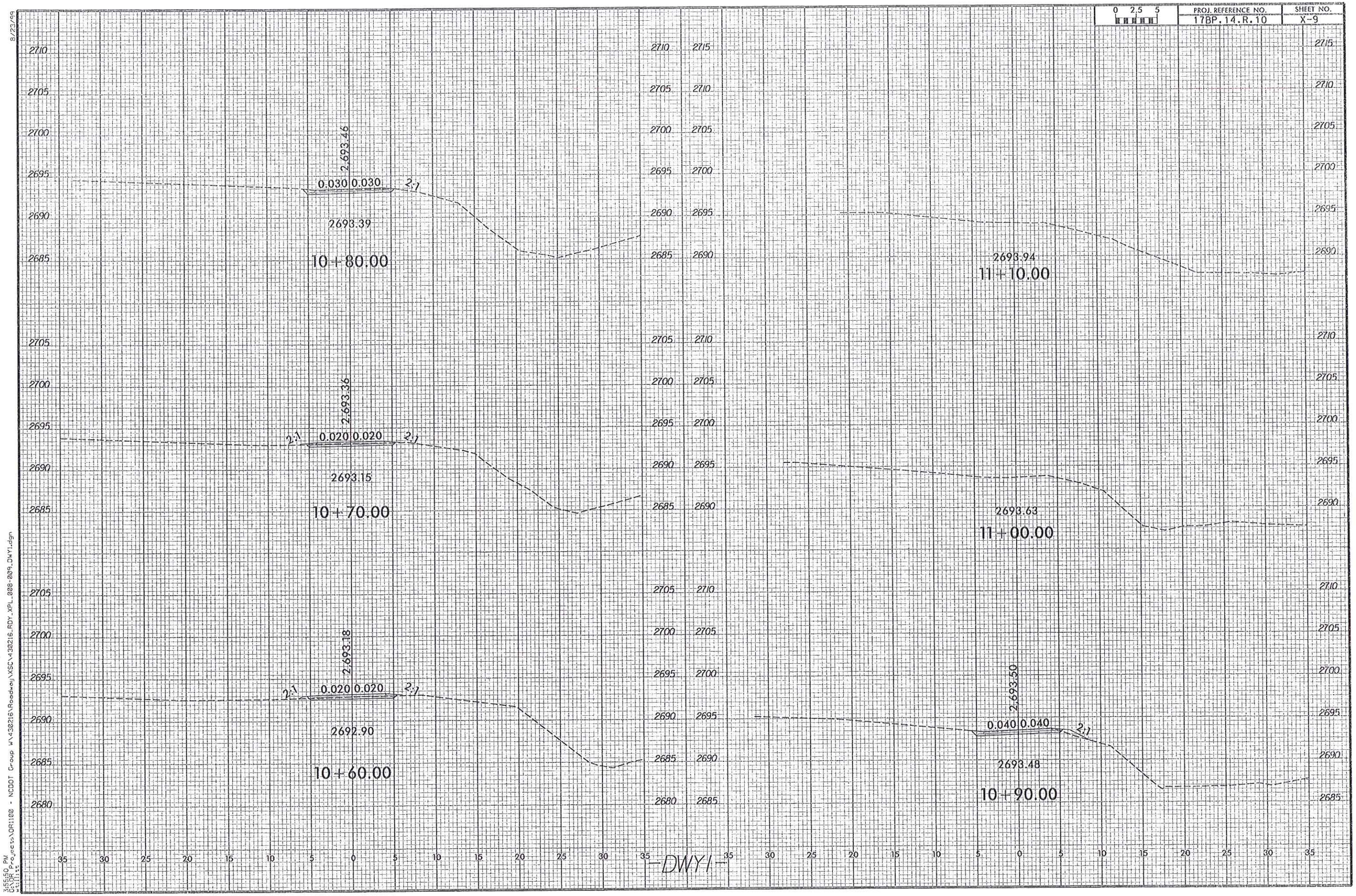

8/23/99
3:55:50 PM
G:\DR Projects\DR1108 - NCDOT Group W\430216\Roadway\XSC\430216_RDY_XPL_008-009_DWY1.dgn

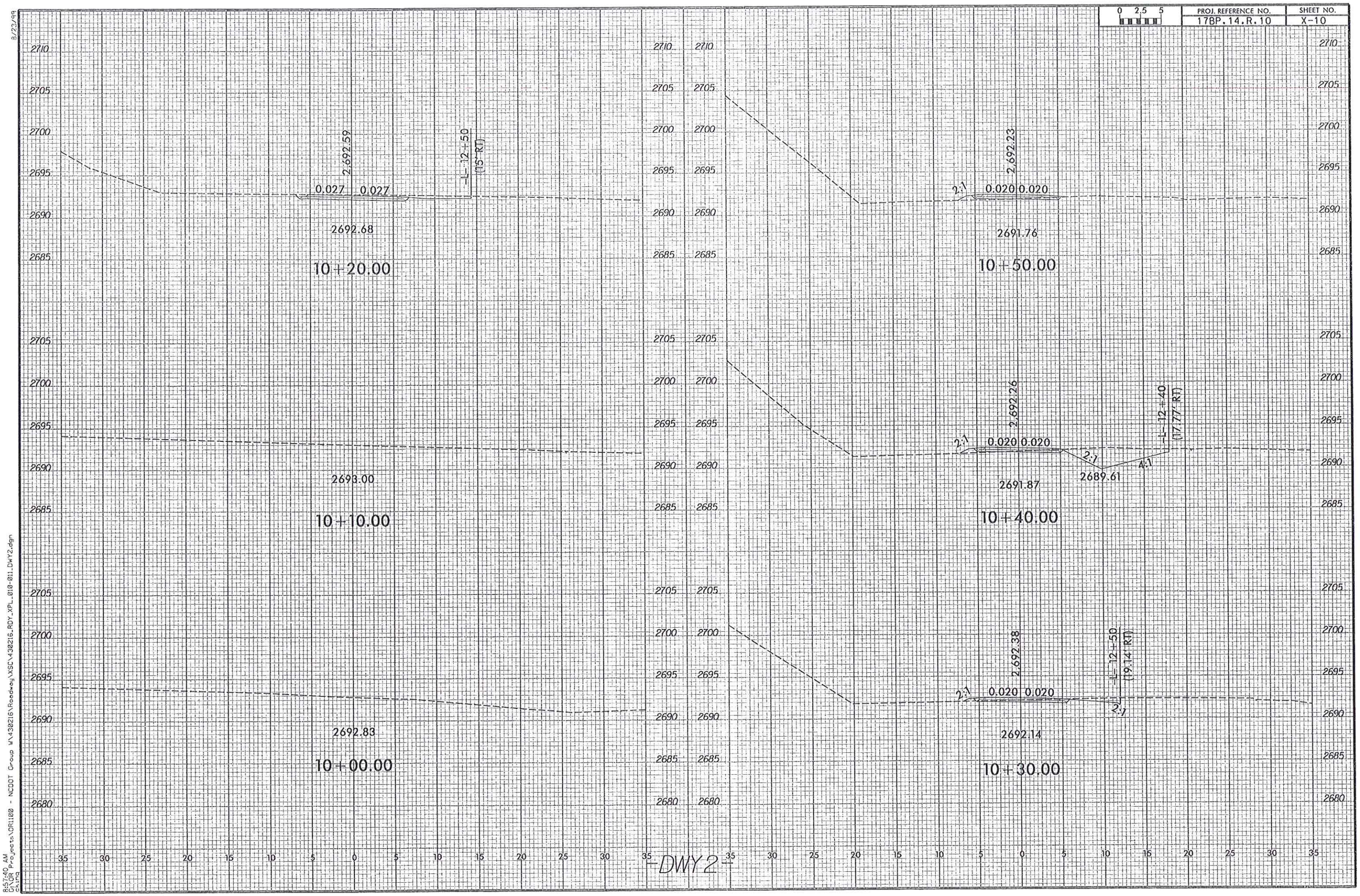

8/23/99

8:57:40 AM
GK\DR Projects\DR1100 - NCDOT Group W\430216\Roadway\XSC\430216_RDY_XPL_010-011_DWY2.dgn
Extra

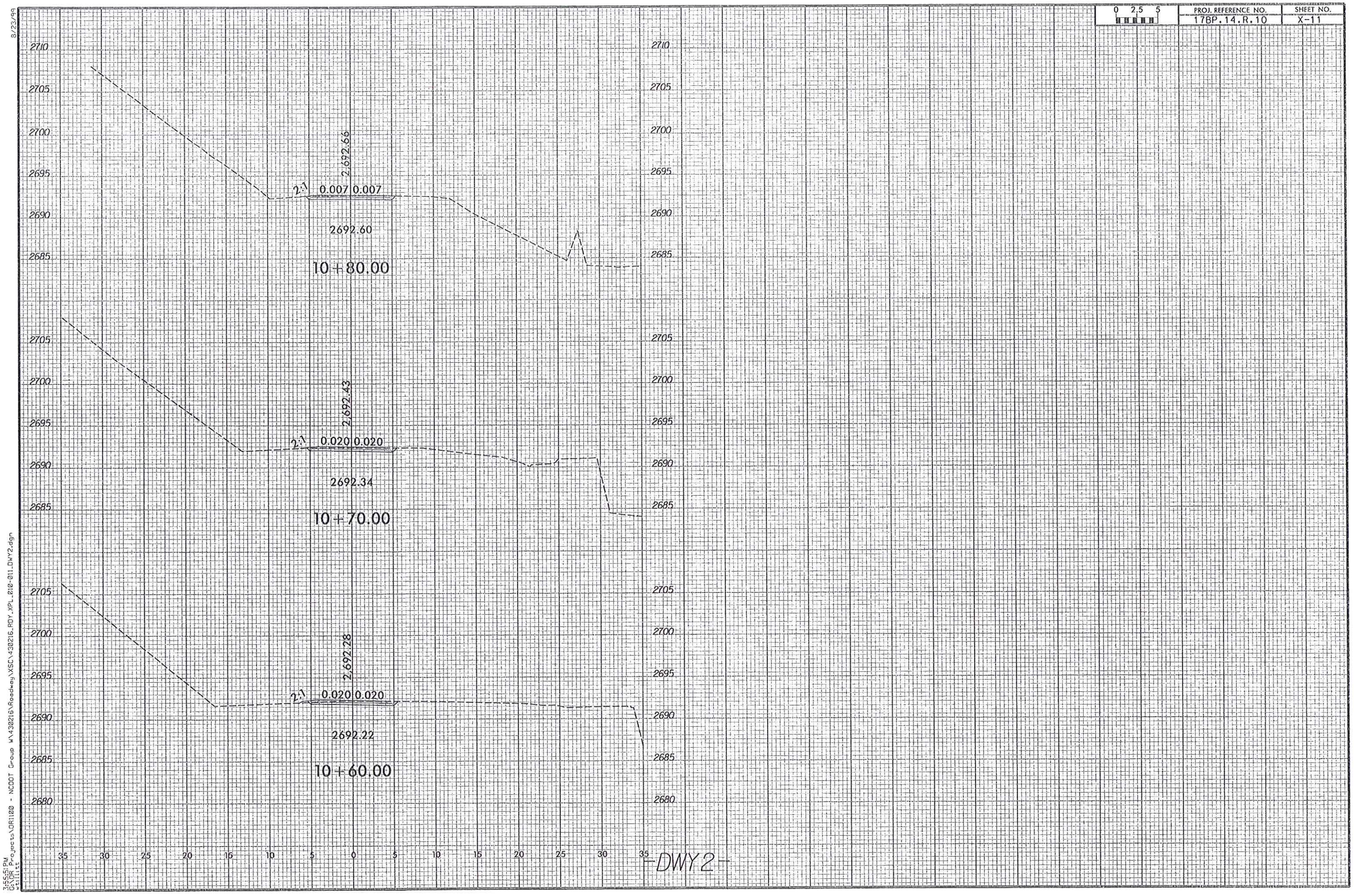
0 2.5 5
PROJ. REFERENCE NO.
17BP.14.R.10
SHEET NO.
X-11
2710
2705
2700
2695
2690
2685
2680
2692.66
2.0
0.007 0.007
2692.60
10+80.00
2692.43
2.0
0.020 0.020
2692.34
10+70.00
2692.28
2.0
0.020 0.020
2692.22
10+60.00
35 30 25 20 15 10 5 0 5 10 15 20 25 30 35
DWY2
8/23/99
3:55:51 PM
G:\DR Projects\DR1100 - NCDOT Group W\430216\Roadway\XSCV430216_RDY_XPL_010-011_DWY2.dgn
Settings

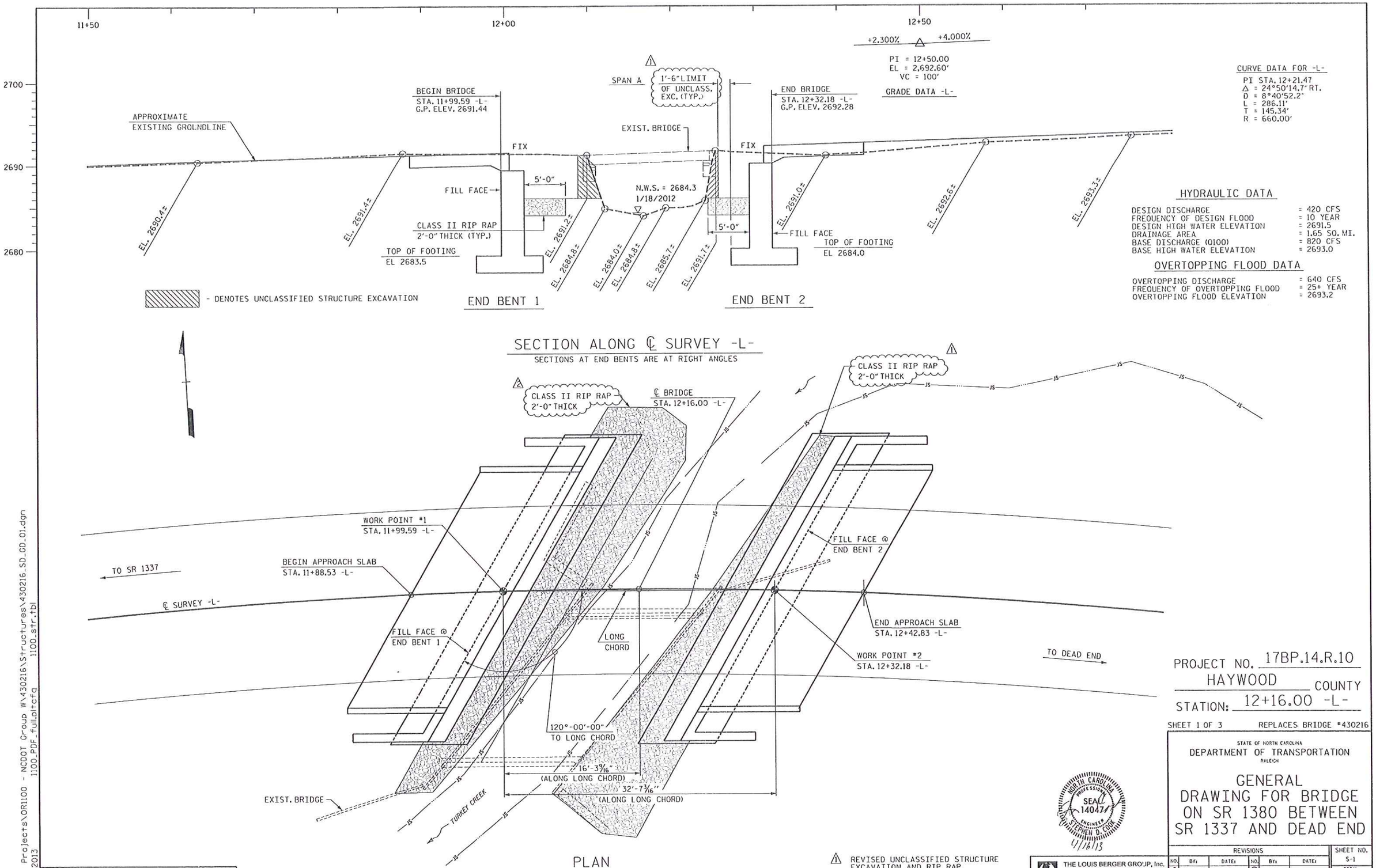

PROJECT NO. 17BP.14.R.10
HAYWOOD COUNTY
STATION: 12+16.00 -L-

SHEET 1 OF 3 REPLACES BRIDGE #430216

STATE OF NORTH CAROLINA
DEPARTMENT OF TRANSPORTATION
RALEIGH

GENERAL DRAWING FOR BRIDGE ON SR 1380 BETWEEN SR 1337 AND DEAD END

NORTH CAROLINA PROFESSIONAL SEAL 14047 ENGINEER STEPHEN D. COOK
4/16/13

1 REVISED UNCLASSIFIED STRUCTURE EXCAVATION AND RIP RAP.
2 REVISED RIP RAP LIMITS AT END BENTS

THE LOUIS BERGER GROUP, Inc.
1001 Wade Avenue, Suite 400
Raleigh, NC 27605-3322

REVISIONS						
NO.	BY:	DATE:	NO.	BY:	DATE:	
1	SDC	2/2013	3			
2	SDC	4/2013	4			

SHEET NO. S-1
TOTAL SHEETS 20

DRAWN BY : R. KNIGHT DATE : JULY 2012
CHECKED BY : M. PAYNE DATE : AUG 2012

G:\OR Projects\OR1100 - NCDOT Group W\430216\Structures\430216_SD_GD_01.dgn
4/16/2013 1100_PDF_full.pltcfg 1100_str.tbl

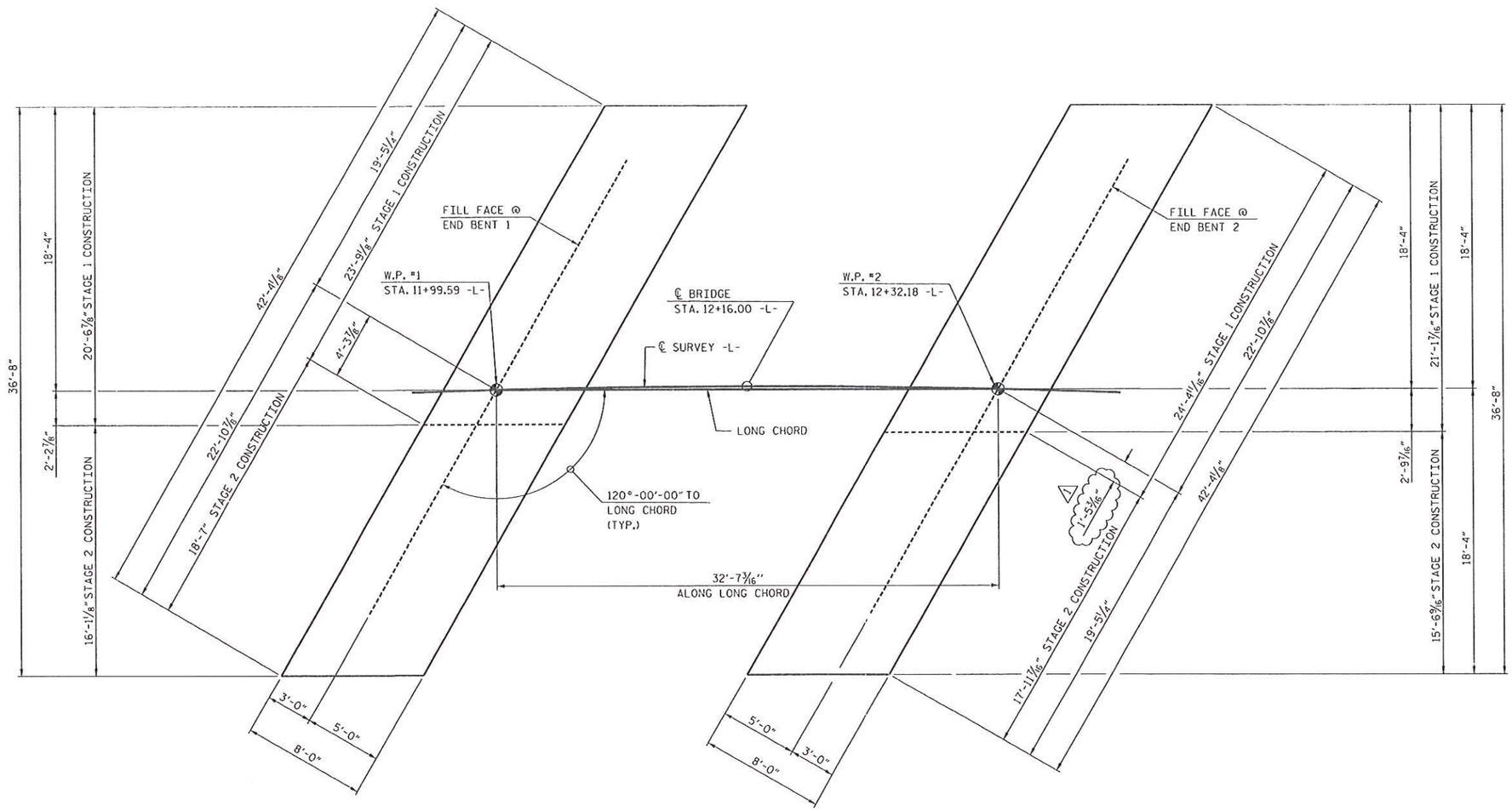

FOUNDATION LAYOUT

PROJECT NO. 17BP.14.R.10
HAYWOOD COUNTY
STATION: 12+16.00 -L-

SHEET 2 OF 3

STATE OF NORTH CAROLINA
DEPARTMENT OF TRANSPORTATION
RALEIGH

GENERAL
DRAWING FOR BRIDGE
ON SR 1380 BETWEEN
SR 1337 AND DEAD END

NORTH CAROLINA PROFESSIONAL SEAL 14047 ENGINEER STEPHEN D. COX
4/16/13

THE LOUIS BERGER GROUP, Inc.
1001 Wade Avenue, Suite 400
Raleigh, NC 27605-3322

REVISIONS								SHEET NO.
NO.	BY:	DATE:	NO.	BY:	DATE:			S-2
1	SDC	4/2013	3					TOTAL SHEETS
2			4					20

1 REVISED DIMENSION AS PER NCDOT COMMENTS 4/11/13

DRAWN BY : C. KING DATE : JULY 2012
CHECKED BY : M. PAYNE DATE : AUG 2012

G:\DR Projects\DR1100 - NCDOT Group W\430216\Structures\430216_SD_GD_02.dgn
4/16/2013 1100_PDF_full.pltcfg 1100_str.tbl

BM1 - 8 INCH SPIKE IN 42 INCH WALNUT TREE, BL STATION 5+66.00 22 LT., ELEVATION = 2687.22

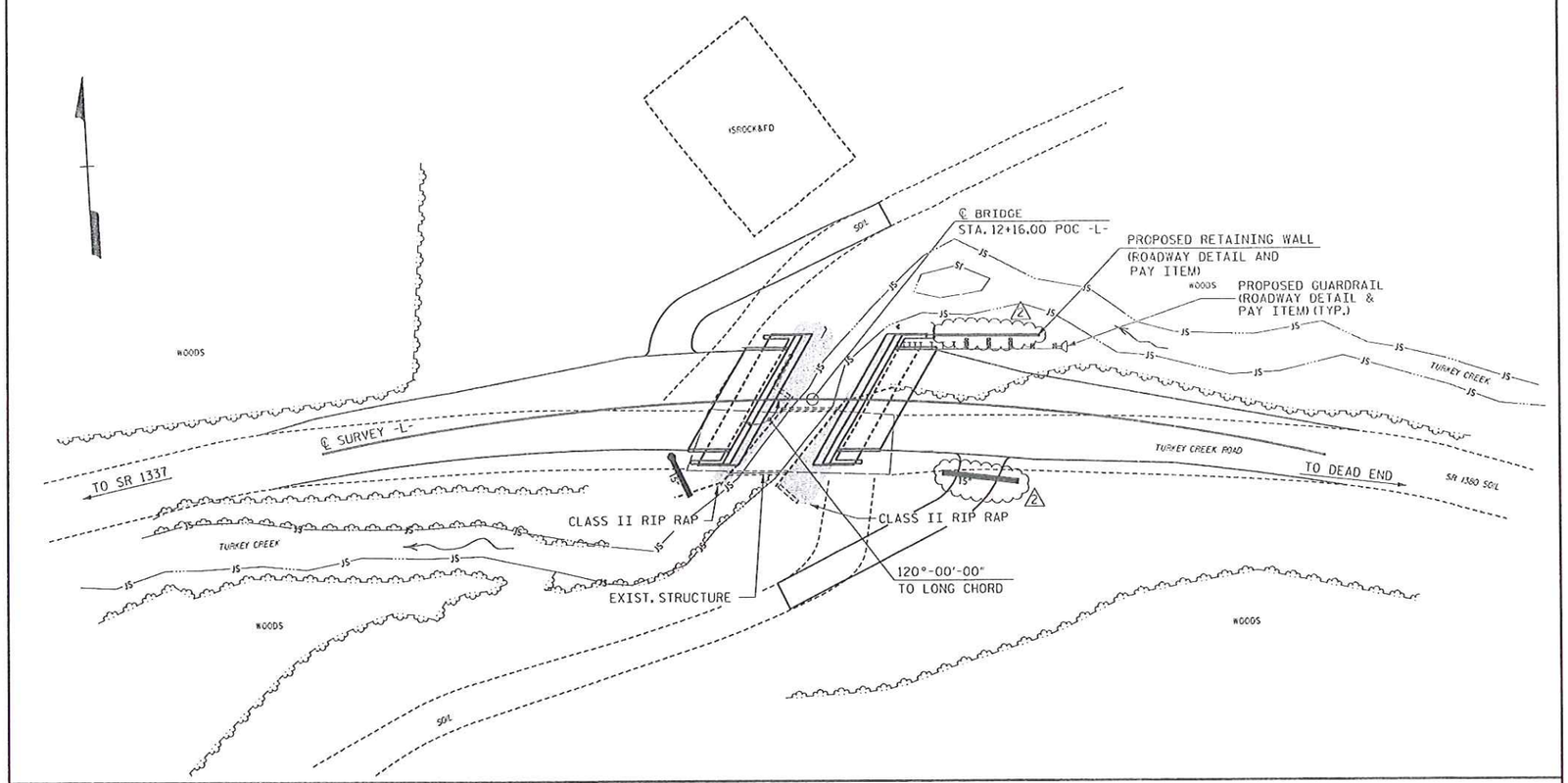

LOCATION SKETCH

NOTES

ASSUMED LIVE LOAD = HL-93 OR ALTERNATE LOADING.

FOR EROSION CONTROL MEASURES SEE EROSION CONTROL PLANS.

THIS BRIDGE HAS BEEN DESIGNED IN ACCORDANCE WITH THE AASHTO LRFD BRIDGE DESIGN SPECIFICATIONS.

REMOVAL OF THE EXISTING BRIDGE SHALL BE PERFORMED SO AS NOT TO ALLOW DEBRIS TO FALL INTO THE WATER. THE CONTRACTOR SHALL REMOVE THE BRIDGE AND SUBMIT PLANS FOR DEMOLITION IN ACCORDANCE WITH ARTICLE 402-2 OF THE STANDARD SPECIFICATIONS.

THE EXISTING STRUCTURE CONSISTING OF ONE 16'-6" SPAN CONSISTING OF TIMBER FLOOR ON TIMBER JOISTS ON TIMBER CAPS WITH TIMBER POSTS AND SILLS AND SHALL BE REMOVED. THE EXISTING BRIDGE IS PRESENTLY POSTED FOR LOAD LIMIT. SHOULD THE STRUCTUAL INTEGRITY OF THEE BRIDGE DETERIORATE THE LOAD LIMIT MAY BE REVISED AND POSTED AND MAY BE PRODUCED AS FOUND NECESSARY DURING THE LIFE OF THE PROJECT.

THE MATERIAL SHOWN IN THE CROSS-HATCHED AREA SHALL BE EXCAVATED FOR A DISTANCE OF 20 FT. EACH SIDE OF CENTERLINE ROADWAY AS DIRECTED BY THE ENGINEER. THIS WORK WILL BE PAID FOR AT THE CONTRACT LUMP SUM PRICE FOR UNCLASSIFIED STRUCTURE EXCAVATION. SEE SECTION 412 OF THE STANDARD SPECIFICATIONS.

THE SUBSTRUCTURE OF THE EXISTING BRIDGE INDICATED ON THE PLANS IS FROM THE BEST INFORMATION AVAILABLE. SINCE THIS INFORMATION IS SHOWN FOR THE CONVENIENCE OF THE CONTRACTOR, THE CONTRACTOR SHALL HAVE NO CLAIM WHATSOEVER AGAINST THE DEPARTMENT OF TRANSPORTATION FOR ANY DELAYS OR ADDITIONAL COST INCURRED BASED ON DIFFERENCES BETWEEN THE EXISTING BRIDGE SUBSTRUCTURE SHOWN ON THE PLANS AND THE ACTUAL CONDITIONS AT THE PROJECT SITE.

ASPHALT WEARING SURFACE IS INCLUDED IN ROADWAY QUANTITY ON ROADWAY PLANS.

THIS STRUCTURE HAS BEEN DESIGNED IN ACCORDANCE WITH HEC 18, "EVALUATING SCOUR AT BRIDGES", MAY, 2001.

FOR UTILITY INFORMATION, SEE UTILITY PLANS AND SPECIAL PROVISIONS.

FOR SUBMITTAL OF WORKING DRAWINGS, SEE SPECIAL PROVISIONS.

FOR FALSEWORK AND FORMWORK, SEE SPECIAL PROVISIONS.

FOR CRANE SAFETY, SEE SPECIAL PROVISIONS.

FOR GROUT FOR STRUCTURES, SEE SPECIAL PROVISIONS.

THIS BRIDGE IS LOCATED IN SEISMIC ZONE 1.

SEE TRAFFIC CONTROL PLANS FOR LOCATION AND PAY LIMITS OF THE ANCHORED PORTABLE CONCRETE BARRIER.

FOR OTHER DESIGN DATA AND NOTES SEE STANDARD NOTES SHEET.

FOUNDATION NOTES:

THE SPREAD FOOTINGS AT END BENTS ARE DESIGNED FOR A FACTORED RESISTANCE OF 10 TSF. CHECK FIELD CONDITIONS FOR THE REQUIRED RESISTANCE OF 25 TSF JUST BEFORE PLACING CONCRETE.

TOTAL BILL OF MATERIAL

	REMOVAL OF EXISTING STRUCTURE @ STA. 12+16.00 -L-	FOUNDATION EXCAVATION AT END BENT AT STA. 12+16.00 -L-	UNCLASSIFIED STRUCTURE EXCAVATION	CLASS A CONCRETE	BRIDGE APPROACH SLABS	REINFORCING STEEL	VERTICAL CONCRETE BARRIER RAIL	RIP RAP CLASS II (2'-0" THICK)	ELASTOMERIC BEARINGS	3'-0" X 1'-9" PRESTRESSED CONCRETE CORED SLABS	
	LUMP SUM	LUMP SUM	LUMP SUM	CU. YDS.	LUMP SUM	LBS.	LIN.FT.	TON	LUMP SUM	NO.	LIN.FT.
SUPERSTRUCTURE					LUMP SUM		60.29		LUMP SUM	10	300
END BENT NO. 1		LUMP SUM	LUMP SUM	56.1		6042		30			
END BENT NO. 2		LUMP SUM	LUMP SUM	56.1		6159		41			
TOTAL	LUMP SUM	LUMP SUM	LUMP SUM	112.2	LUMP SUM	12,201 △1	60.29	71	LUMP SUM	10	300

△1 REINFORCING STEEL
△2 REVISED DIMENSION AS PER NCDOT COMMENTS 4/11/13

PROJECT NO. 17BP.14.R.10
HAYWOOD COUNTY
STATION: 12+16.00 -L-

SHEET 3 OF 3

STATE OF NORTH CAROLINA
DEPARTMENT OF TRANSPORTATION
RALEIGH

GENERAL DRAWING FOR BRIDGE ON SR 1380 BETWEEN SR 1337 AND DEAD END

NORTH CAROLINA PROFESSIONAL SEAL 14047 ENGINEER STEPHEN D. COBB
4/16/13

THE LOUIS BERGER GROUP, Inc.
1001 Wade Avenue, Suite 400
Raleigh, NC 27605-3322

REVISIONS						SHEET NO.
NO.	BY:	DATE:	NO.	BY:	DATE:	S-3
1	SDC	2/2013	3			TOTAL SHEETS
2	SDC	4/2013	4			20

DRAWN BY : R. KNIGHT DATE : APR. 2012
CHECKED BY : M. PAYNE DATE : AUG 2012

G:\OR Projects\OR1100 - NCDOT Group W\430216\Structures\430216_SD_GD_03.dgn
1100_PDF_fullpitcfg 1100_str.tbl
4/16/2013

LOAD AND RESISTANCE FACTOR RATING (LRFD) SUMMARY FOR PRESTRESSED CONCRETE GIRDERS

LEVEL		VEHICLE	WEIGHT (W) (TONS)	CONTROLLING LOAD RATING	MINIMUM RATING FACTORS (RF)	TONS = W X RF	STRENGTH I LIMIT STATE											SERVICE III LIMIT STATE						COMMENT NUMBER
								MOMENT					SHEAR						MOMENT					
							LIVELOAD FACTORS	DISTRIBUTION FACTORS (DF)	RATING FACTOR	SPAN	GIRDER LOCATION	DISTANCE FROM LEFT END OF SPAN (ft)	DISTRIBUTION FACTORS (DF)	RATING FACTOR	SPAN	GIRDER LOCATION	DISTANCE FROM LEFT END OF SPAN (ft)	LIVELOAD FACTORS	DISTRIBUTION FACTORS (DF)	RATING FACTOR	SPAN	GIRDER LOCATION	DISTANCE FROM LEFT END OF SPAN (ft)	
DESIGN LOAD RATING		HL-93(Inv)	N/A	1	1.202	--	1.75	0.256	2.04	30'	EL	14.423	0.655	1.2	30'	EL	1.442	0.80	0.256	1.75	30'	EL	14.423	
		HL-93(Opr)	N/A	--	1.558	--	1.35	0.256	2.64	30'	EL	14.423	0.655	1.56	30'	EL	1.442	N/A	--	--	--	--	--	
		HS-20(Inv)	36.000	2	1.365	49.124	1.75	0.256	2.82	30'	EL	11.538	0.655	1.36	30'	EL	1.442	0.80	0.256	2.45	30'	EL	11.538	
		HS-20(Opr)	36.000	--	1.769	63.679	1.35	0.256	3.65	30'	EL	11.538	0.655	1.77	30'	EL	1.442	N/A	--	--	--	--	--	
LEGAL LOAD RATING	SV	SNSH	13.500	--	3.333	45.002	1.4	0.256	5.76	30'	EL	14.423	0.655	3.33	30'	EL	1.442	0.80	0.256	3.95	30'	EL	14.423	
		SNGARBS2	20.000	--	2.581	51.624	1.4	0.256	5.04	30'	EL	11.538	0.655	2.58	30'	EL	1.442	0.80	0.256	3.50	30'	EL	11.538	
		SNAGRIS2	22.000	--	2.487	54.723	1.4	0.256	5.13	30'	EL	11.538	0.655	2.49	30'	EL	1.442	0.80	0.256	3.56	30'	EL	11.538	
		SNCOTTS3	27.250	--	1.684	45.891	1.4	0.256	2.89	30'	EL	14.423	0.655	1.68	30'	EL	1.442	0.80	0.256	1.99	30'	EL	14.423	
		SNAGGRS4	34.925	--	1.551	54.185	1.4	0.256	2.79	30'	EL	14.423	0.655	1.55	30'	EL	1.442	0.80	0.256	1.91	30'	EL	14.423	
		SNS5A	35.550	--	1.645	58.469	1.4	0.256	2.7	30'	EL	14.423	0.655	1.64	30'	EL	1.442	0.80	0.256	1.85	30'	EL	14.423	
		SNS6A	39.950	--	1.547	61.791	1.4	0.256	2.55	30'	EL	14.423	0.655	1.55	30'	EL	1.442	0.80	0.256	1.75	30'	EL	14.423	
		SNS7B	42.000	--	1.578	66.285	1.4	0.256	2.48	30'	EL	14.423	0.655	1.58	30'	EL	1.442	0.80	0.256	1.70	30'	EL	14.423	
	TTST	TNAGRIT3	33.000	--	1.838	60.67	1.4	0.256	3.31	30'	EL	14.423	0.655	1.84	30'	EL	1.442	0.80	0.256	2.27	30'	EL	14.423	
		TNT4A	33.075	--	1.71	56.559	1.4	0.256	3.13	30'	EL	14.423	0.655	1.71	30'	EL	1.442	0.80	0.256	2.15	30'	EL	14.423	
		TNT6A	41.600	--	1.652	68.714	1.4	0.256	2.85	30'	EL	14.423	0.655	1.65	30'	EL	1.442	0.80	0.256	1.96	30'	EL	14.423	
		TNT7A	42.000	--	1.573	66.067	1.4	0.256	2.94	30'	EL	14.423	0.655	1.57	30'	EL	1.442	0.80	0.256	2.02	30'	EL	14.423	
		TNT7B	42.000	--	1.536	64.525	1.4	0.256	2.77	30'	EL	14.423	0.655	1.54	30'	EL	1.442	0.80	0.256	1.90	30'	EL	14.423	
		TNAGRIT4	43.000	--	1.486	63.9	1.4	0.256	2.87	30'	EL	14.423	0.655	1.49	30'	EL	1.442	0.80	0.256	1.97	30'	EL	14.423	
		TNAGT5A	45.000	--	1.594	71.736	1.4	0.256	2.79	30'	EL	14.423	0.655	1.59	30'	EL	1.442	0.80	0.256	1.92	30'	EL	14.423	
		TNAGT5B	45.000	3	1.399	62.946	1.4	0.256	2.68	30'	EL	11.538	0.655	1.4	30'	EL	1.442	0.80	0.256	1.85	30'	EL	11.538	

LOAD FACTORS:

DESIGN LOAD RATING FACTORS	LIMIT STATE	γ_{DC}	γ_{DW}
	STRENGTH I	1.25	1.50
	SERVICE III	1.00	1.00

NOTES:

MINIMUM RATING FACTORS ARE BASED ON THE STRENGTH I AND SERVICE III LIMIT STATES.

ALLOWABLE STRESSES FOR SERVICE III LIMIT STATE ARE AS REQUIRED FOR DESIGN.

COMMENTS:

1. NONE

CONTROLLING LOAD RATING
1 DESIGN LOAD RATING (HL-93)
2 DESIGN LOAD RATING (HS-20)
3 LEGAL LOAD RATING **
** SEE CHART FOR VEHICLE TYPE

GIRDER LOCATION
I - INTERIOR GIRDER
EL - EXTERIOR LEFT GIRDER
ER - EXTERIOR RIGHT GIRDER

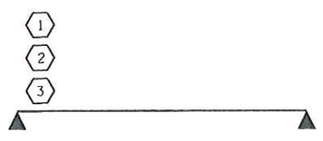

LRFR SUMMARY

FOR SPAN 'A'

PROJECT NO. 17BP.14.R.10

HAYWOOD COUNTY

STATION: 12+16.00 -L-

NORTH CAROLINA PROFESSIONAL SEAL 14047 ENGINEER STEPHEN D. KOOK

4/18/13

THE LOUIS BERGER GROUP, Inc.
1001 Wade Avenue, Suite 400
Raleigh, NC 27605-3322

STATE OF NORTH CAROLINA
DEPARTMENT OF TRANSPORTATION
RALEIGH

LRFR SUMMARY FOR 30' CORED SLAB UNIT 60° SKEW & 120° SKEW (NON-INTERSTATE TRAFFIC)

REVISIONS								SHEET NO.
NO.	BY:	DATE:	NO.	BY:	DATE:			S-4
1			3					TOTAL SHEETS
2			4					20

STD. NO. 21LRFR1_60&120S_30L

ASSEMBLED BY : R. KNIGHT	CHECKED BY : M. PAYNE	DATE : JULY 2012 DATE : AUG 2012
DRAWN BY : CVC 6/10	CHECKED BY : DNS 6/10	

G:\OR Projects\OR1100 - NCDOT Group W\430216\Structures\430216_SD_LRFR.dgn
4/18/2013 1100_PDF_full.pltcfg 1100_str.tbl

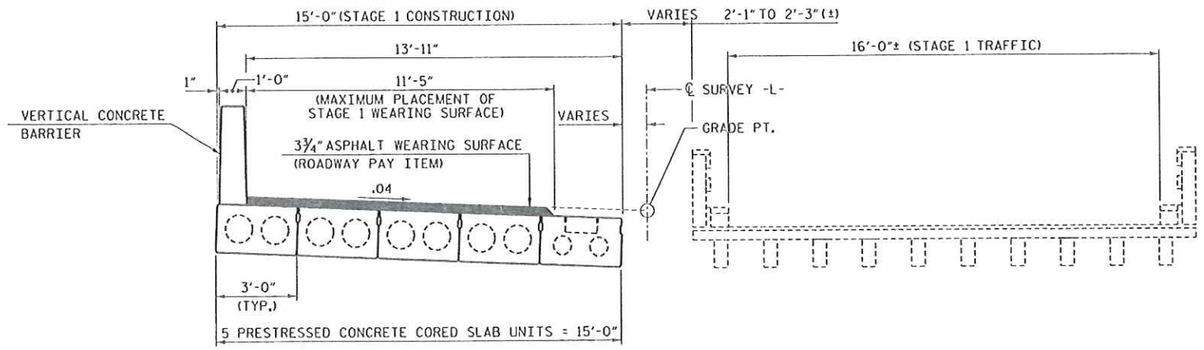

STAGE 1 CONSTRUCTION

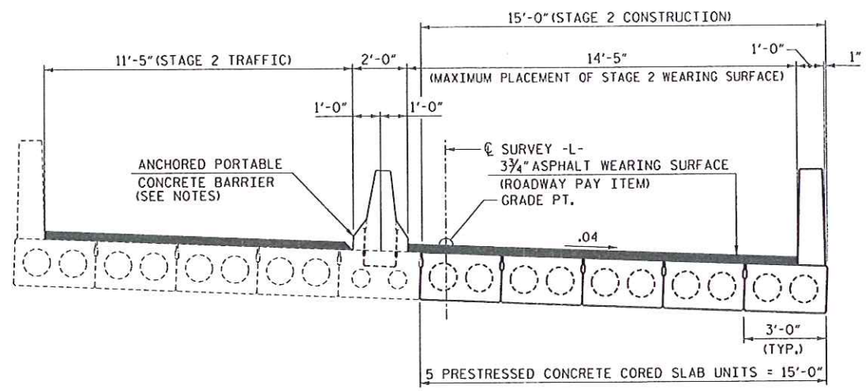

STAGE 2 CONSTRUCTION

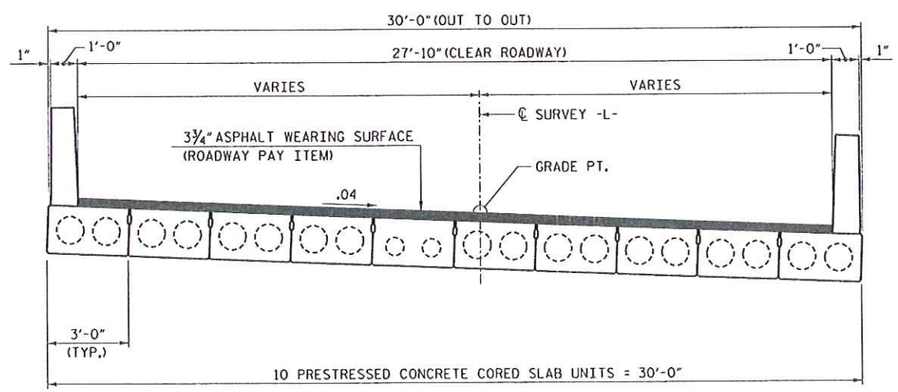

FINAL STRUCTURE

PROJECT NO. 17BP.14.R.10
HAYWOOD COUNTY
STATION: 12+16.00 -L-

STATE OF NORTH CAROLINA
DEPARTMENT OF TRANSPORTATION
RALEIGH

STAGING DIAGRAM FOR BRIDGE ON SR 1380 BETWEEN SR 1337 AND DEAD END

NORTH CAROLINA PROFESSIONAL SEAL 14047 ENGINEER STEPHEN D. COOK
7/18/13

THE LOUIS BERGER GROUP, Inc.
1001 Wade Avenue, Suite 400
Raleigh, NC 27605-3322

REVISIONS						SHEET NO.
NO.	BY:	DATE:	NO.	BY:	DATE:	S-5
1			3			TOTAL SHEETS
2			4			20

DRAWN BY : R. KNIGHT DATE : JULY 2012
CHECKED BY : S. COOK DATE : AUG 2012

G:\OR Projects\OR1100 - NCDOT Group W\430216\Structures\430216_SD_STAGE.dgn
4/18/2013 1100_PDF_full.pltcfg 1100_str.tbl

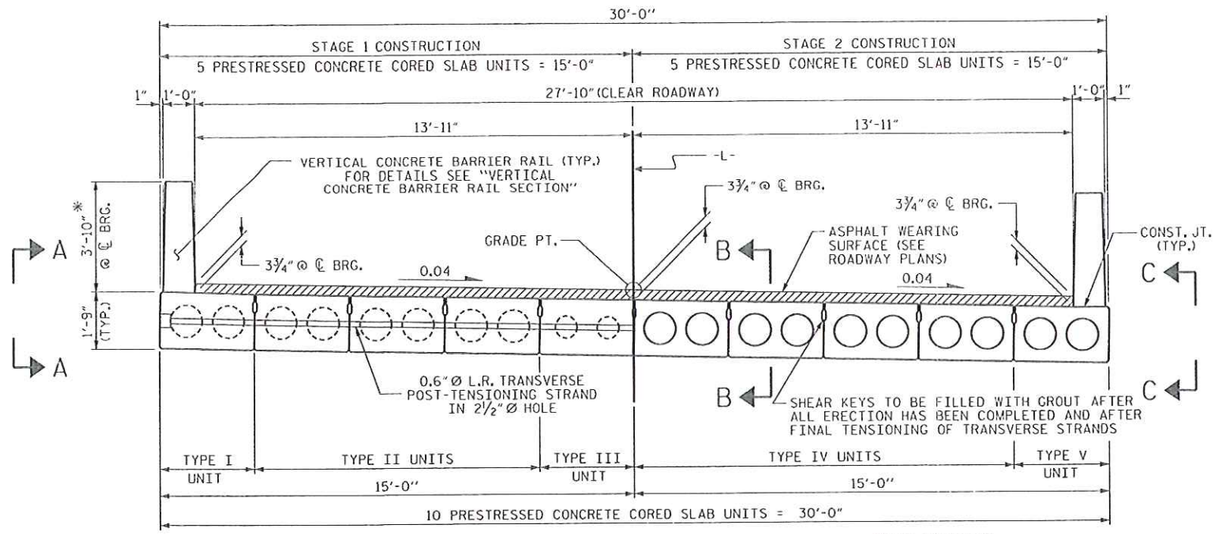

TYPICAL SECTION

FINAL BRIDGE (STAGE 1 AND 2 COMPLETED)
(FOR VIEWS A-A, B-B & C-C, SEE SHEET 2 OF 2)

* - THE MAXIMUM BARRIER RAIL HEIGHT AND ASPHALT THICKNESS IS SHOWN. THE HEIGHT OF THE BARRIER RAIL AND ASPHALT THICKNESS VARIES WHILE THE TOP OF THE BARRIER RAIL FOLLOWS THE PROFILE OF THE GUTTERLINE. FOR RAIL HEIGHT DETAILS AND ASPHALT THICKNESS, SEE THE "VERTICAL CONCRETE BARRIER RAIL SECTION" DETAIL.

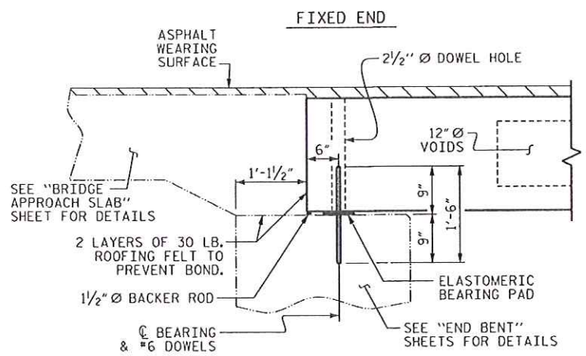

SECTION AT END BENT

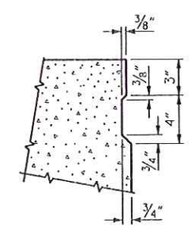

SHEAR KEY DETAIL

NOTE: OMIT SHEAR KEY ON OUTSIDE FACE OF EXTERIOR CORED SLABS.

PROJECT NO. 17BP.14.R.10
HAYWOOD COUNTY
STATION: 12+16.00 -L-

SHEET 1 OF 2

STATE OF NORTH CAROLINA
DEPARTMENT OF TRANSPORTATION
RALEIGH

STANDARD
3'-0" X 1'-9"
PRESTRESSED CONCRETE
CORED SLAB UNIT
120° SKEW

NORTH CAROLINA PROFESSIONAL SEAL 4047 ENGINEER STEPHEN D. COOK
4/18/13

THE LOUIS BERGER GROUP, Inc.
1001 Wade Avenue, Suite 400
Raleigh, NC 27605-3322

REVISIONS							SHEET NO.
NO.	BY:	DATE:	NO.	BY:	DATE:		S-6
1			3				TOTAL SHEETS
2			4				20

STD. NO. 21" PCS2_30_120S

ASSEMBLED BY :	R. KNIGHT	DATE :	JULY 2012
CHECKED BY :	M. PAYNE	DATE :	AUG 2012
DRAWN BY :	DGE 5/09	REV. 12/11	MAA/AAC
CHECKED BY :	BCH 6/09		

G:\OR Projects\OR1100 - NCDOT Group W\430216\Structures\430216_SD_TYP01.dgn
4/18/2013 1100_PDF_fullplt.cfg 1100_str.tbl

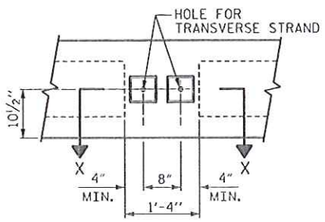

VIEW A-A

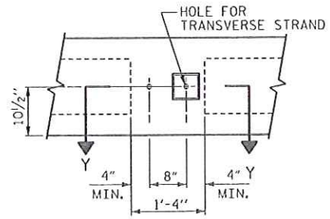

VIEW B-B

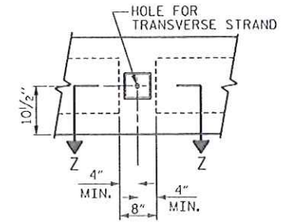

VIEW C-C

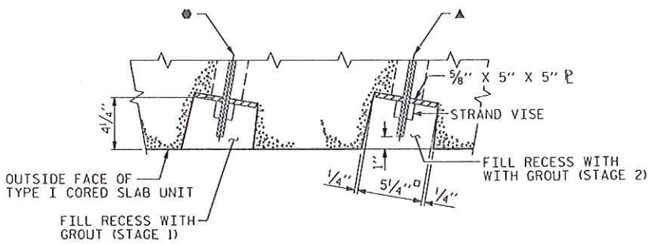

SECTION X-X

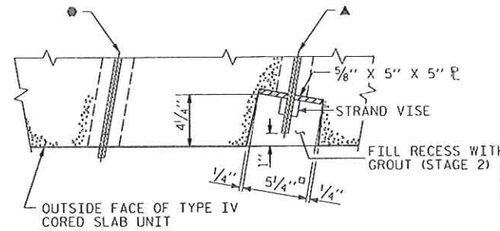

SECTION Y-Y

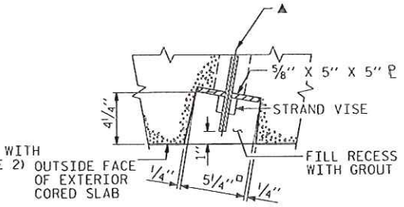

SECTION Z-Z

● ℄ 0.6 "Ø H.S. TRANSVERSE POST-TENSIONING STRAND SHEATHERD WITH A NON-CORROSIVE PIPE (TO BE TENSIONED DURING STAGE 1 CONST.)

▲ ℄ 0.6 "Ø H.S. TRANSVERSE POST-TENSIONING STRAND SHEATHERD WITH A NON-CORROSIVE PIPE (TO BE TENSIONED DURING STAGE 2 CONST.)

GROUTED RECESS AT END OF POST-TENSIONED STRAND OF CORED SLABS

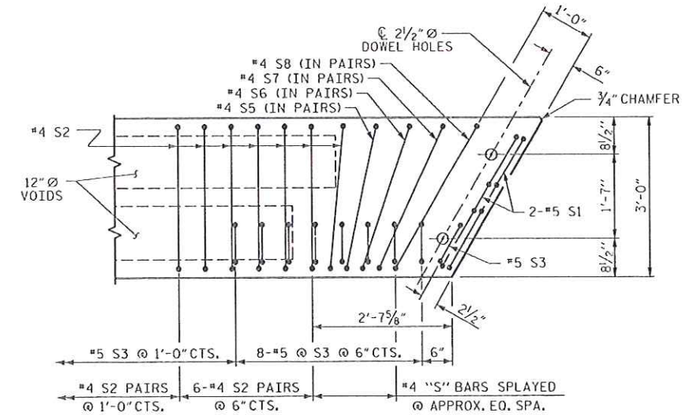

PART PLAN - EXTERIOR UNIT

NOTE: EXTERIOR UNIT SHOWN - INTERIOR UNIT SIMILAR EXCEPT OMIT #5 S3 BARS.

▣ BOND SHALL BE BROKEN ON THESE STRANDS FOR A DISTANCE OF 2'-0" FROM END OF CORED SLAB UNIT. SEE STANDARD SPECIFICATIONS, ARTICLE 1078-7.

◉ OPTIONAL FULL LENGTH DEBONDED STRANDS. THESE STRANDS ARE NOT REQUIRED. IF THE FABRICATOR CHOOSES TO INCLUDE THESE STRANDS IN THE CORED SLAB UNIT, THE STRANDS SHALL BE DEBONDED FOR THE FULL LENGTH OF THE UNIT AT NO ADDITIONAL COST. SEE STANDARD SPECIFICATIONS, ARTICLE 1078-7.

DEBONDING LEGEND

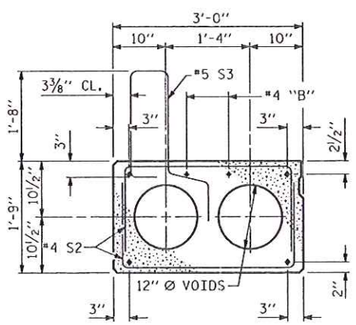

EXT. SLAB SECTION

(FOR PRESTRESSED STRAND LAYOUT, SEE INTERIOR SLAB SECTION.)

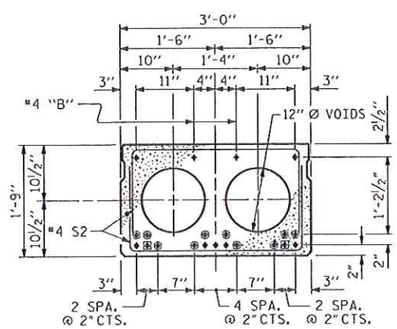

INTERIOR SLAB SECTION

(9 STRANDS REQUIRED)

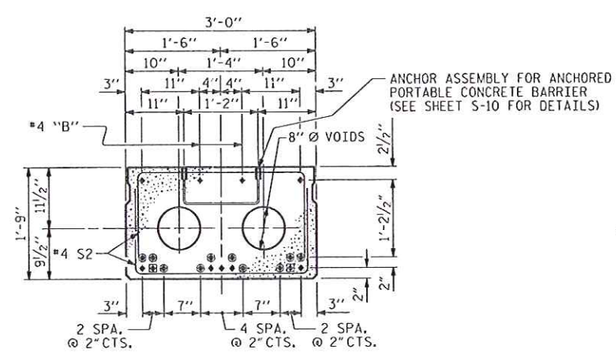

INTERIOR SLAB SECTION

(9 STRANDS REQUIRED)
TYPE III UNIT

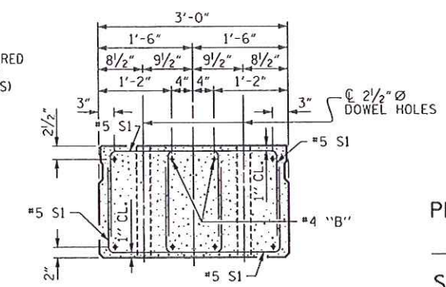

END ELEVATION

SHOWING PLACEMENT OF DOUBLE STIRRUPS AND LOCATION OF DOWEL HOLES. (STRAND LAYOUT NOT SHOWN.) INTERIOR SLAB UNIT SHOWN-EXTERIOR SLAB UNIT SIMILAR EXCEPT SHEAR KEY LOCATION.

NORTH CAROLINA PROFESSIONAL SEAL 14047 ENGINEER STEPHEN D. KOK
4/18/13

PROJECT NO. 17BP.14.R.10
HAYWOOD COUNTY
STATION: 12+16.00 -L-

SHEET 2 OF 2

STATE OF NORTH CAROLINA
DEPARTMENT OF TRANSPORTATION
RALEIGH

SUPERSTRUCTURE TYPICAL SECTION

THE LOUIS BERGER GROUP, Inc.
1001 Wade Avenue, Suite 400
Raleigh, NC 27605-3322

REVISIONS						SHEET NO.
NO.	BY:	DATE:	NO.	BY:	DATE:	S-7
1			3			TOTAL SHEETS
2			4			20

ASSEMBLED BY :	J. MYA	DATE : JULY 2012	
CHECKED BY :	M.PAYNE	DATE : AUG 2012	
DRAWN BY : DGE	5/09	REV. 12/11	MAA/AAC
CHECKED BY : BCH	6/09		

G:\OR Projects\OR1100 - NCDOT Group W\430216\Structures\430216_SD_TYP02.dgn
4/18/2013 1100_PDF_full.pltcfg 1100_str.tbl

NOTES:

● STRAND #1 GOES THRU 5 CORED SLAB UNITS (TO BE TENSIONED DURING STAGE 1 CONSTRUCTION)

▲ STRAND #2 GOES THRU ALL 12 CORED SLAB UNITS (TO BE TENSIONED DURING STAGE 2 CONSTRUCTION)

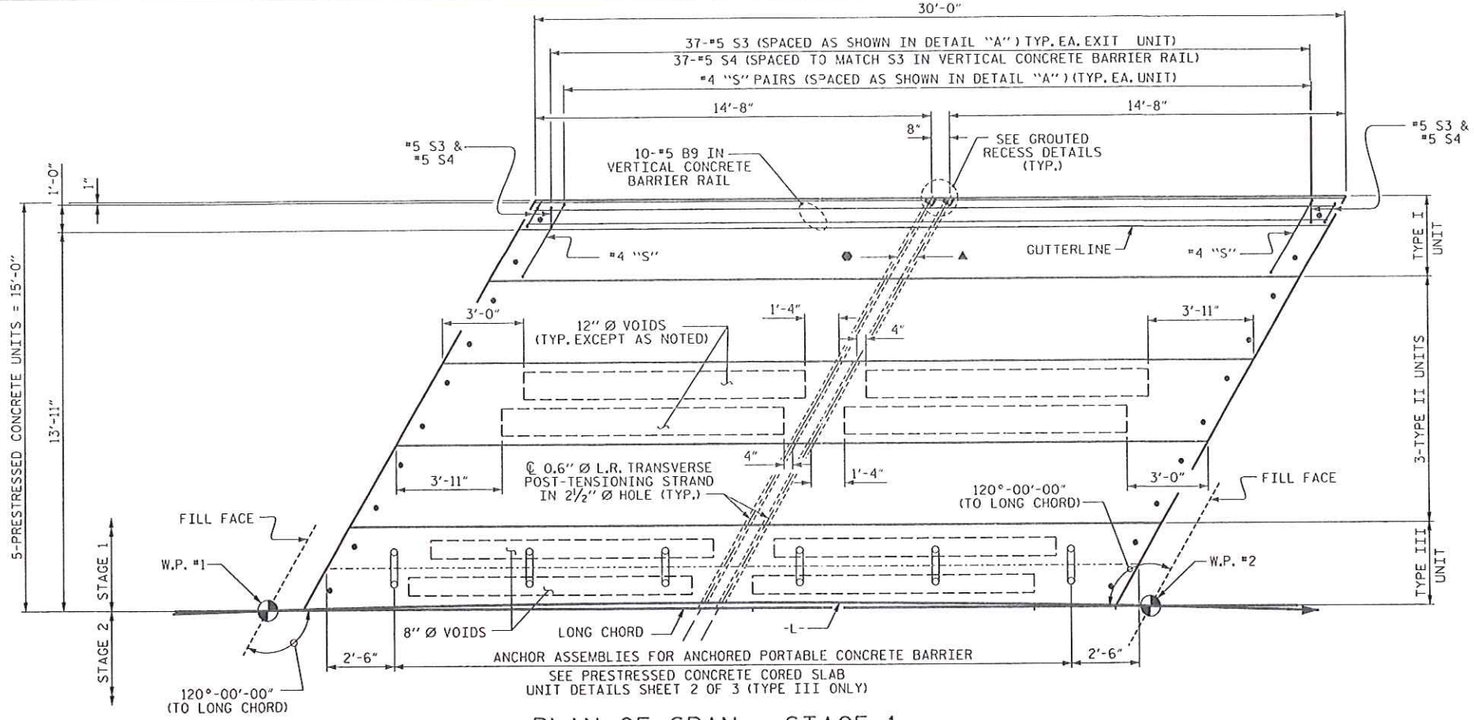

PLAN OF SPAN - STAGE 1

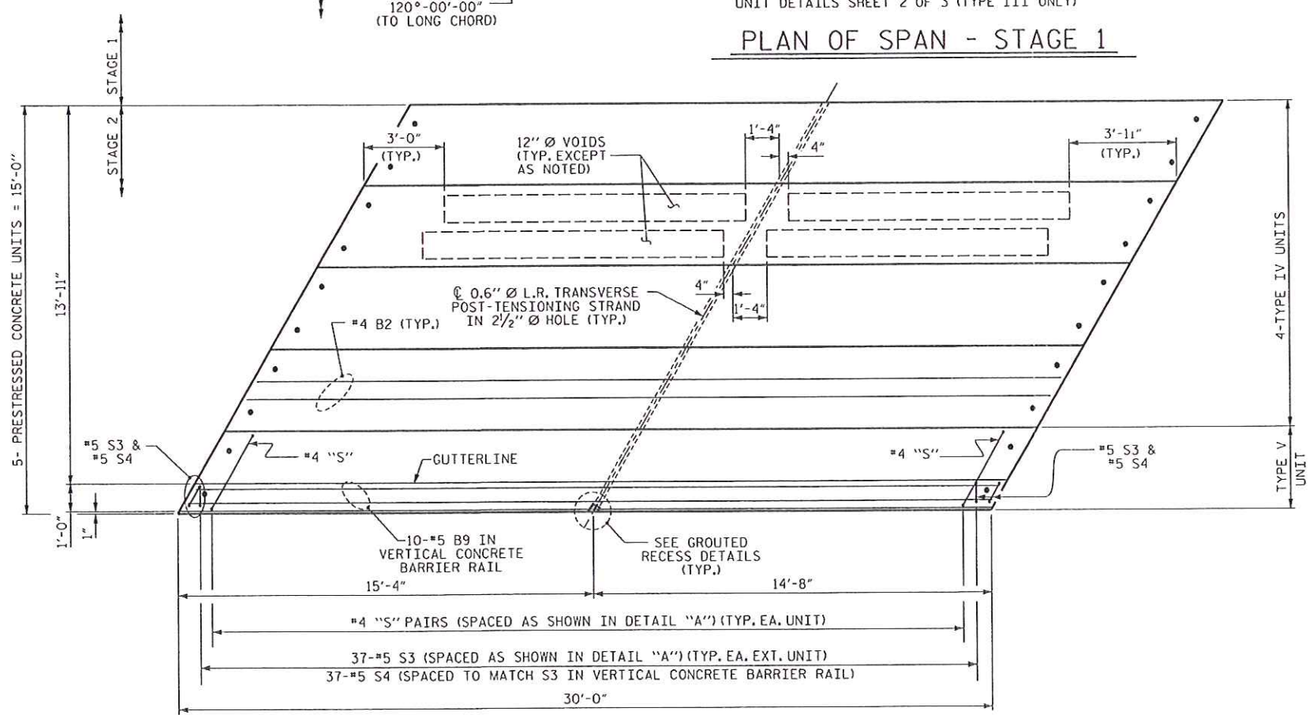

PLAN OF SPAN - STAGE 2

PROJECT NO. 17BP.14.R.10
HAYWOOD COUNTY
STATION: 12+16.00 -L-

STATE OF NORTH CAROLINA
DEPARTMENT OF TRANSPORTATION
RALEIGH

PLAN OF 30' UNIT
27'-10" CLEAR ROADWAY
120° SKEW

NORTH CAROLINA PROFESSIONAL SEAL 14047 ENGINEER STEPHEN D. COX
4/19/13

THE LOUIS BERGER GROUP, Inc.
1001 Wade Avenue, Suite 400
Raleigh, NC 27605-3322

REVISIONS						
NO.	BY:	DATE:	NO.	BY:	DATE:	
1			3			
2			4			

SHEET NO. S-8
TOTAL SHEETS 20

ASSEMBLED BY :	R. KNIGHT	DATE : JULY 2012	
CHECKED BY :	M. PAYNE	DATE : AUG 2012	
DRAWN BY : DGE	3/09	REV. 12/5/11	MAA/AAC
CHECKED BY : BCH	3/09		

G:\OR Projects\OR1100 - NCDOT Group W\430216\Structures\430216_SD_PCS01.DGN
1100_PDF_full.pltcfg 1100_str.tbl
4/18/2013

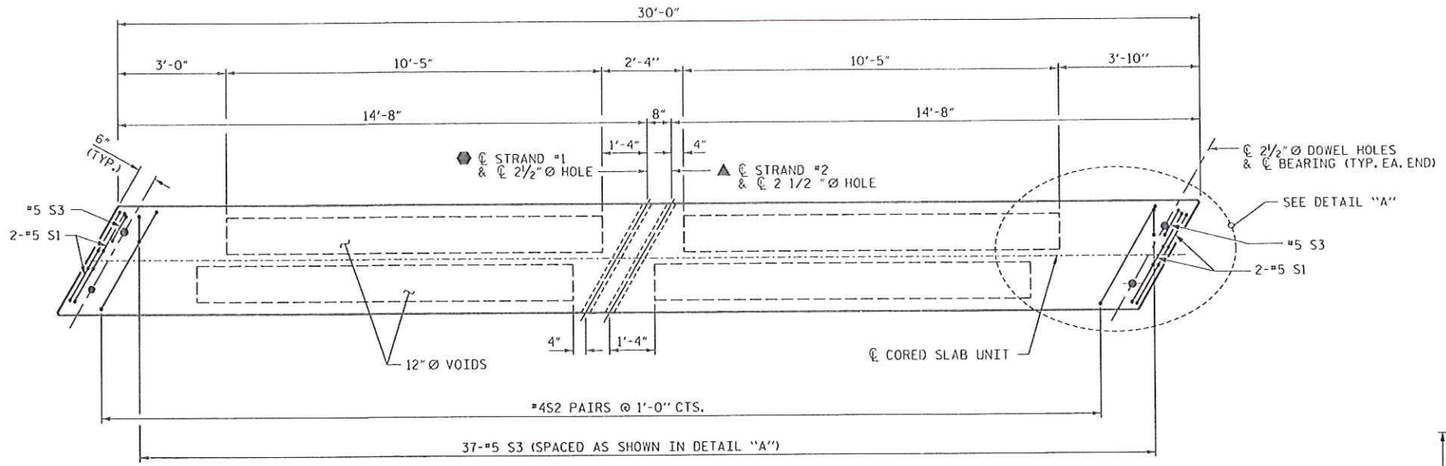

PLAN OF TYPE I CORED SLAB UNIT - STAGE 1

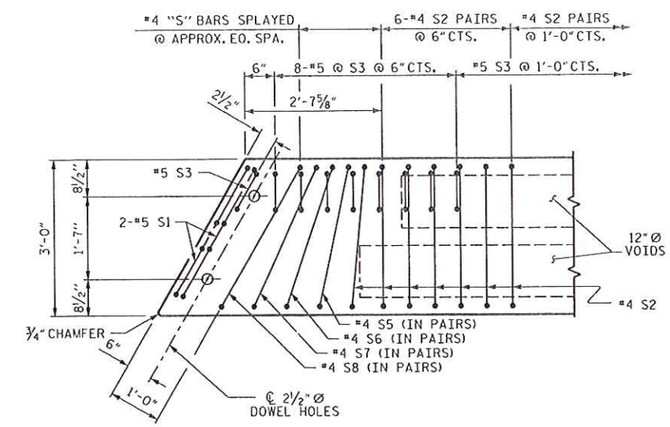

DETAIL "A"

NOTE: EXTERIOR UNIT SHOWN - INTERIOR UNIT SIMILAR EXCEPT OMIT #5 S3 BARS.

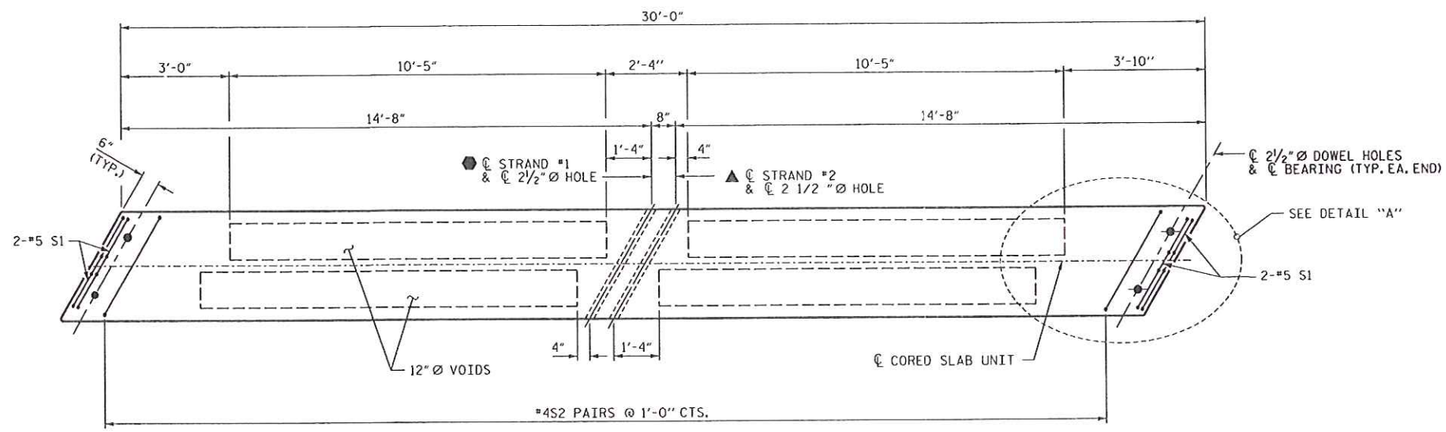

PLAN OF TYPE II CORED SLAB UNIT - STAGE 1

PROJECT NO. 17BP.14.R.10
HAYWOOD COUNTY
STATION: 12+16.00 -L-

SHEET 1 OF 3

STATE OF NORTH CAROLINA
DEPARTMENT OF TRANSPORTATION
RALEIGH

3'-0" x 1'-9"
PRESTRESSED CONCRETE
CORED SLAB UNIT

NORTH CAROLINA PROFESSIONAL SEAL 14047 ENGINEER STEPHEN D. FOUK
4/18/13

THE LOUIS BERGER GROUP, Inc.
1001 Wade Avenue, Suite 400
Raleigh, NC 27605-3322

REVISIONS						SHEET NO.
NO.	BY:	DATE:	NO.	BY:	DATE:	S-9
1			3			TOTAL SHEETS
2			4			20

DRAWN BY : J. MYA DATE : AUG. 2012
CHECKED BY : M. PAYNE DATE : AUG. 2012

G:\OR Projects\OR1100 - NCDOT Group W\430216\Structures\430216_SD_PCS02.DGN
4/18/2013 1100_PDF_fullpltcfg 1100_str.tbl

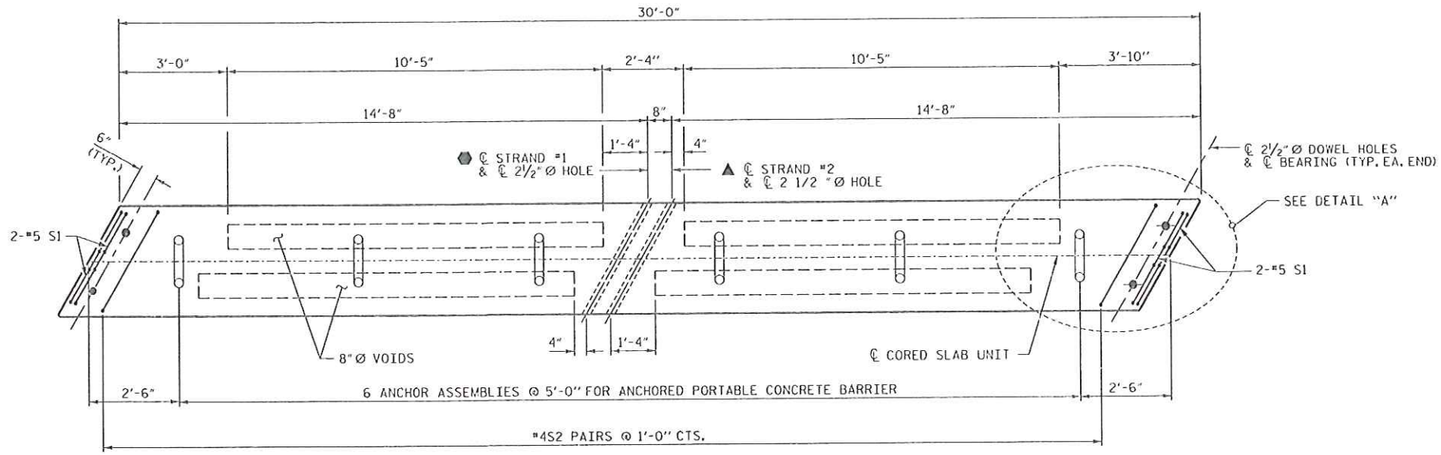

PLAN OF TYPE III CORED SLAB UNIT - STAGE 1

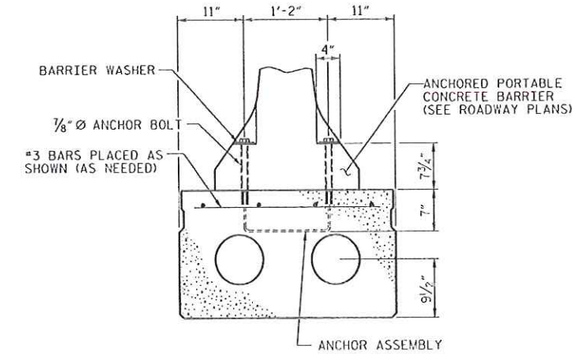

TYPE III CORED SLAB SECTION

(SHOWING PLACEMENT OF ANCHOR ASSEMBLY)

THE #3 BARS ARE INCIDENTAL AND THEIR COST SHALL BE INCLUDED IN THE PRICE BID FOR THE PRESTRESSED CONCRETE CORDED SLAB

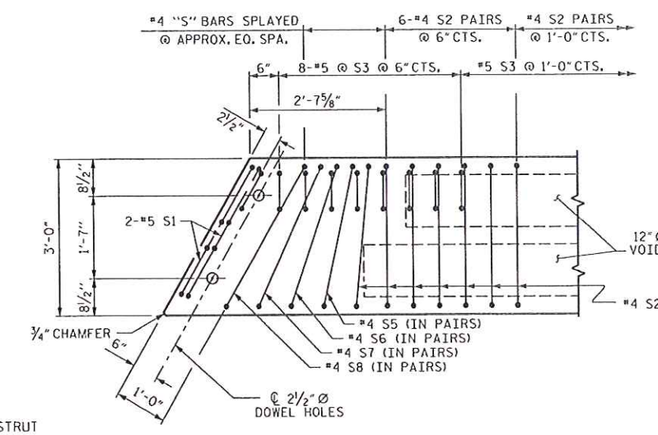

DETAIL "A"

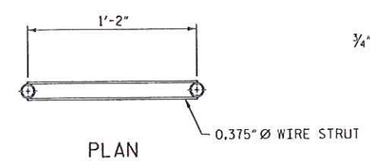

PLAN

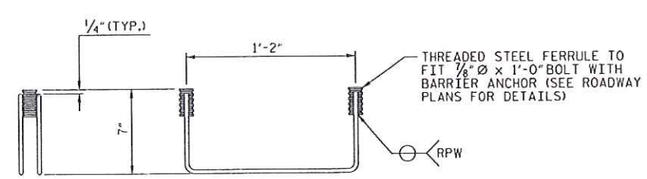

ELEVATION

NOTES:

- STRAND #1 GOES THRU 5 CORED SLAB UNITS (TO BE TENSIONED DURING STAGE 1 CONSTRUCTION)
- STRAND #2 GOES THRU ALL 12 CORED SLAB UNITS (TO BE TENSIONED DURING STAGE 2 CONSTRUCTION)

STRAND #1 AND STRAND #2 ARE 0.6 " Ø H.S. TRANSVERSE POST-TENSIONED STRANDS.

THE #4S2 AND #5S3 BARS MAY BE SHIFTED SLIGHTLY IN ORDER TO MAINTAIN A 2" MINIMUM CLEARANCE TO THE 2 1/2 " HOLES.

ANCHOR ASSEMBLY NOTES:

THE ANCHOR ASSEMBLY FOR PORTABLE CONCRETE BARRIER SHALL CONSIST OF THE FOLLOWING COMPONENTS:

A. FERRULES SHALL BE MADE FROM STEEL MEETING THE REQUIREMENTS OF AASHTO M169, GRADE 12L14 AND SHALL HAVE A MINIMUM LENGTH OF THREADS OIF 2 1/2 ".

B. 2- 7/8 " Ø x 1'-0" ANCHOR BOLTS SHALL CONFORM TO THE REQUIREMENTSOF ASTM A307. ANCHOR BOLTS SHALL BE GALVANIZED. (AT THE OPTION OF THE CONTRACTOR'S OPTION STAINLESS STEEL BOLTS MAY BE USED AS AN ALTERNATE FOR THE 7/8 " Ø x 1'-0" GALVANIZED BOLTS. THEY SHALL CONFORM TO OR EXCEED THE MECHANICAL REQUIREMENTS OF ASTM A307. THE USE OF THIS ALTERNATE SHALL BE APPROVED BY THE ENGINEER.

C. WIRE STRUTS SHOWN IN THE ANCHOR ASSEMBLY DETAIL ARE MINIMUM ALLOWABLE SIZE AND SHALL HAVE A MINIMUM TENSILE STRENGTH OF 100,000 P.S.I.

ANCHOR ASSEMBLY WITH BOLTS SHALL BE ASSEMBLED IN THE SHOP. BOLT THREADS MAY BE RECUT AS NECESSARY TO INSURE FIT.

THE COST OF THE ANCHOR ASSEMBLY COMPLETE IN PLACE, SHALL BE INCLUDED, AS APPLICABLE, IN THE UNIT CONTRACT PRICE BID FOR 3'-0" x 1'-9" PRESTRESSED CONCRETE CORED SLAB OR LUMP SUM FOR THE APPROACH SLABS.

FERRULES TO BE PLUGGED DURING CASTING OF THE CORED SLAB UNITS OR POURING OF THE APPROACH SLABS AS RECOMMENDED BY THE MANUFACTURER.

AT THE CONTRACTOR'S OPTION, FERRULES WITH OPEN OR CLOSED ENDS MAY BE USED.

FOR 4" x 3 1/2 " x 1/2 " BARRIER WASHER TO BE USED WITH THE ANCHOR ASSEMBLY, SEE ROADWAY PLANS.

PAYMENT FOR THE ANCHORED PORTABLE CONCRETE BARRIER AND BARRIER WASHER ARE INCLUDED IN THE TRAFFIC CONTROL PLANS.

ANCHOR ASSEMBLY FOR ANCHORED PORTABLE CONCRETE BARRIER

(6 ASSEMBLIES REQUIRED IN TYPE III CORED SLAB UNIT)
(4 ASSEMBLIES REQUIRED IN THE APPROACH SLABS)

PROJECT NO. 17BP.14.R.10
HAYWOOD COUNTY
STATION: 12+16.00 -L-

SHEET 2 OF 3

STATE OF NORTH CAROLINA
DEPARTMENT OF TRANSPORTATION
RALEIGH

3'-0" x 1'-9"
PRESTRESSED CONCRETE
CORED SLAB UNIT

NORTH CAROLINA PROFESSIONAL SEAL 14047 ENGINEER STEPHEN D. COOK
4/18/13

THE LOUIS BERGER GROUP, Inc.
1001 Wade Avenue, Suite 400
Raleigh, NC 27605-3322

REVISIONS							SHEET NO.
NO.	BY:	DATE:	NO.	BY:	DATE:		S-10
1			3				TOTAL SHEETS
2			4				20

DRAWN BY : J. MYA DATE : AUG. 2012
CHECKED BY : M. PAYNE DATE : AUG. 2012

G:\OR Projects\OR1100 - NCDOT Group W\430216\Structures\430216_SD_PCS03.DGN
4/18/2013 1100_PDF_full.pltcfg 1100_str.tbl

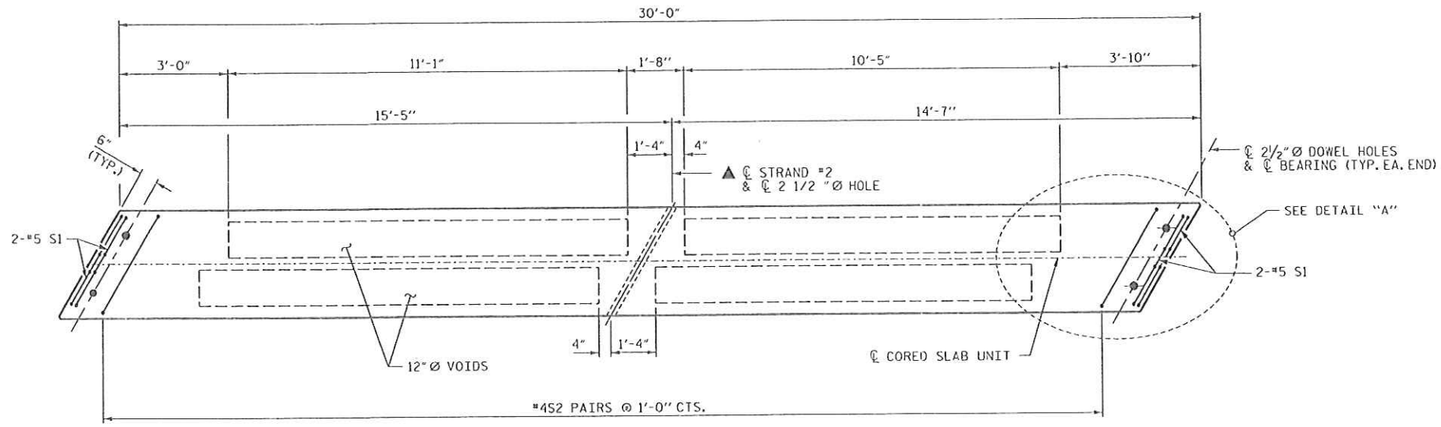

PLAN OF TYPE IV CORED SLAB UNIT - STAGE 2

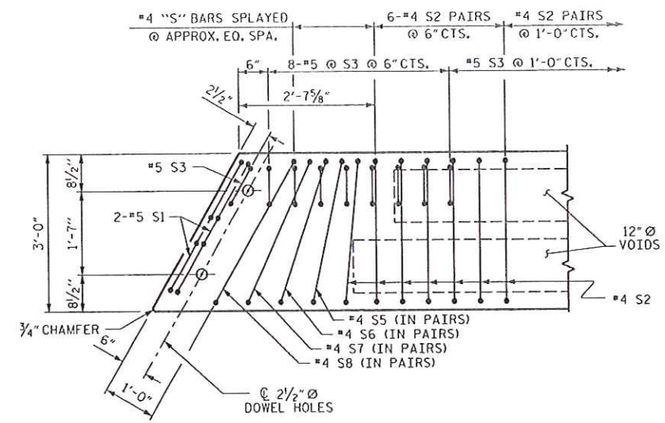

DETAIL "A"

NOTE: EXTERIOR UNIT SHOWN - INTERIOR UNIT SIMILAR EXCEPT OMIT #5 S3 BARS.

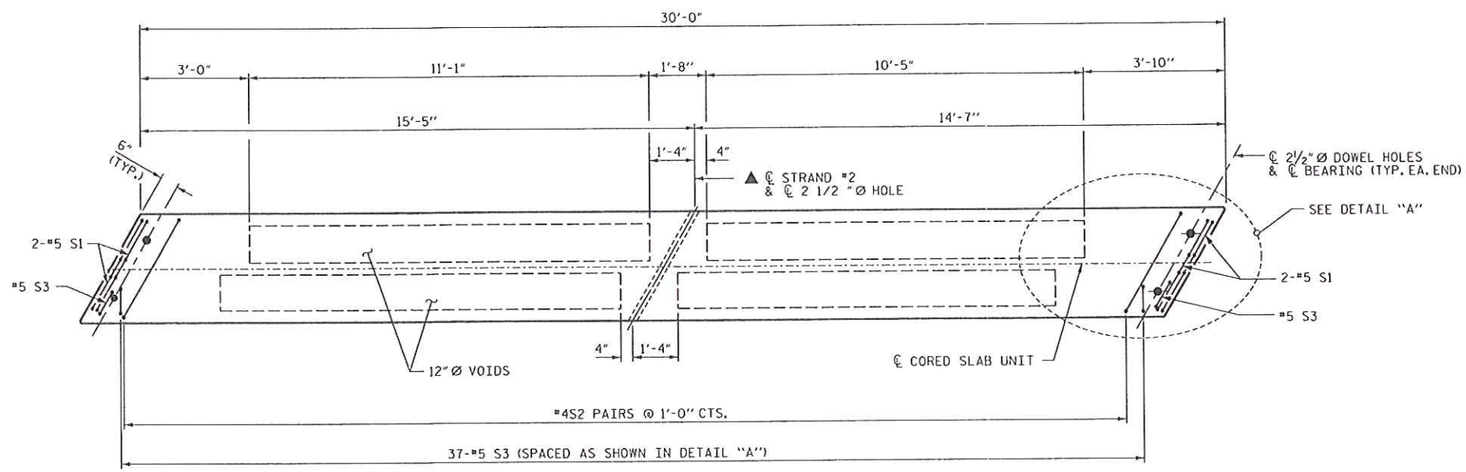

PLAN OF TYPE V CORED SLAB UNIT - STAGE 2

PROJECT NO. 17BP.14.R.10
HAYWOOD COUNTY
STATION: 12+16.00 -L-

SHEET 3 OF 3

STATE OF NORTH CAROLINA
DEPARTMENT OF TRANSPORTATION
RALEIGH

3'-0" x 1'-9" PRESTRESSED CONCRETE CORED SLAB UNIT

NORTH CAROLINA PROFESSIONAL SEAL 14047 ENGINEER STEPHEN D. COOK
4/19/13

THE LOUIS BERGER GROUP, Inc.
1001 Wade Avenue, Suite 400
Raleigh, NC 27605-3322

REVISIONS								SHEET NO.
NO.	BY:	DATE:	NO.	BY:	DATE:			S-11
1			3					TOTAL SHEETS
2			4					20

DRAWN BY : J. MYA DATE : AUG. 2012
CHECKED BY : M. PAYNE DATE : AUG. 2012

G:\OR Projects\OR1100 - NCDOT Group W\430216\Structures\430216_SD_PCS04.DGN
4/18/2013 1100_PDF_full.pltcfg 1100_str.tbl

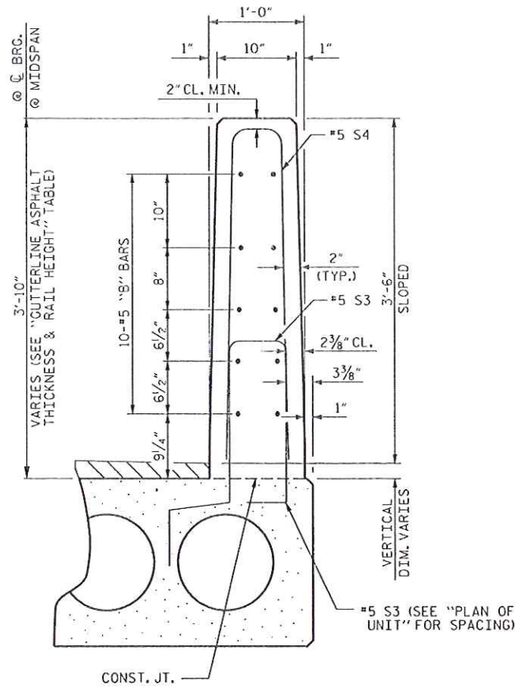

VERTICAL CONCRETE BARRIER RAIL SECTION

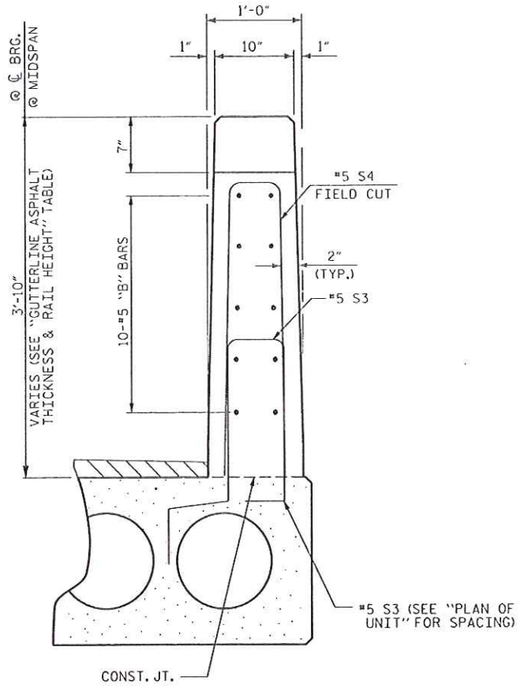

END VIEW

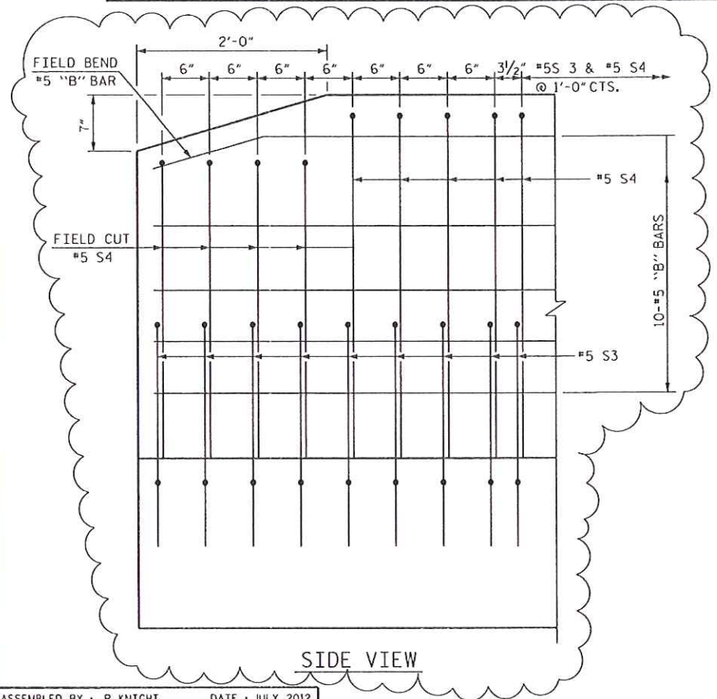

SIDE VIEW

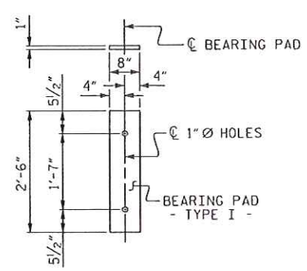

FIXED END
(TYPE I - 20 REQ'D)

BAR TYPES

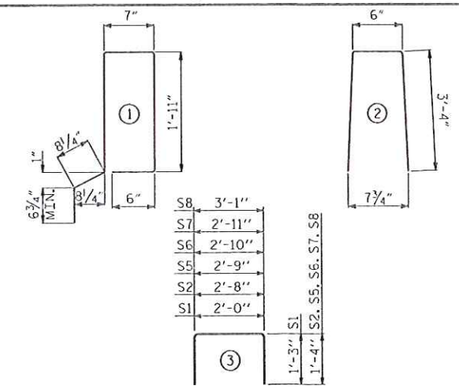

ALL BAR DIMENSIONS ARE OUT TO OUT

BILL OF MATERIAL FOR ONE 30' CORED SLAB UNIT

BAR	NUMBER	SIZE	TYPE	EXTERIOR UNIT LENGTH	EXTERIOR UNIT WEIGHT	INTERIOR UNIT LENGTH	INTERIOR UNIT WEIGHT
B2	2	#4	STR	29'-7"	40	29'-7"	40
S1	8	#5	3	4'-6"	38	4'-6"	38
S2	62	#4	3	5'-4"	221	5'-4"	221
* S3	39	#5	1	6'-2"	251		
S5	4	#4	3	5'-5"	14	5'-5"	14
S6	4	#4	3	5'-6"	15	5'-6"	15
S7	4	#4	3	5'-7"	15	5'-7"	15
S8	4	#4	3	5'-9"	15	5'-9"	15
REINFORCING STEEL			LBS.		358		358
* EPOXY COATED REINFORCING STEEL			LBS.		251		
5000 P.S.I. CONCRETE			CU. YDS.		4.5		4.5
0.6"Ø L.R. STRANDS			No.		9		9

NOTES

ALL PRESTRESSING STRANDS SHALL BE 7-WIRE LOW RELAXATION GRADE 270 STRANDS AND SHALL CONFORM TO AASHTO M203 EXCEPT FOR SAMPLING REQUIREMENTS WHICH SHALL BE IN ACCORDANCE WITH THE STANDARD SPECIFICATIONS.

ALL REINFORCING STEEL CAST WITH THE CORED SLAB SECTIONS SHALL BE GRADE 60 AND SHALL BE INCLUDED IN THE UNIT PRICE BID FOR PRESTRESSED CONCRETE CORED SLABS.

RECESSES FOR TRANSVERSE STRANDS SHALL BE GROUTED AFTER THE TENSIONING OF THE STRANDS.

THE 2½"Ø DOWEL HOLES AT FIXED ENDS OF SLAB SECTIONS SHALL BE FILLED WITH NON-SHRINK GROUT.

THE 2"Ø BACKER ROD SHALL CONFORM TO THE REQUIREMENTS OF TYPE M BOND BREAKER. SEE SECTION 1028 OF THE STANDARD SPECIFICATIONS.

WHEN CORED SLABS ARE CAST, AN INTERNAL HOLD-DOWN SYSTEM SHALL BE EMPLOYED TO PREVENT VOIDS FROM RISING OR MOVING SIDEWAYS. AT LEAST SIX WEEKS PRIOR TO CASTING CORED SLABS, THE CONTRACTOR SHALL SUBMIT TO THE ENGINEER FOR REVIEW AND COMMENT, DETAILED DRAWINGS OF THE PROPOSED HOLD-DOWN SYSTEM. IN ADDITION TO STRUCTURAL DETAILS, LOCATION AND SPACING OF THE HOLD-DOWNS SHALL BE INDICATED.

ALL REINFORCING STEEL IN THE VERTICAL CONCRETE BARRIER RAIL SHALL BE EPOXY COATED.

PRESTRESSING STRANDS SHALL BE CUT FLUSH WITH THE CORED SLAB UNIT ENDS.

APPLY EPOXY PROTECTIVE COATING TO CORED SLAB UNIT ENDS.

GROOVED CONTRACTION JOINTS, ½" IN DEPTH, SHALL BE TOOLED IN ALL EXPOSED FACES OF THE BARRIER RAIL AND IN ACCORDANCE WITH ARTICLE 825-10(B) OF THE STANDARD SPECIFICATIONS. A CONTRACTION JOINT SHALL BE LOCATED AT EACH THIRD POINT BETWEEN BARRIER RAIL EXPANSION JOINTS. ONLY ONE CONTRACTION JOINT IS REQUIRED AT MIDPOINT OF BARRIER RAIL SEGMENTS LESS THAN 20 FEET IN LENGTH AND NO CONTRACTION JOINTS ARE REQUIRED FOR THOSE SEGMENTS LESS THAN 10 FEET IN LENGTH.

TRANSVERSE POST TENSIONING OF THE CORED SLAB UNITS SHALL BE DONE IN ACCORDANCE WITH THE STANDARD SPECIFICATIONS.

THE TRANSFER OF LOAD FROM THE ANCHORAGES TO THE CORED SLAB UNIT SHALL BE DONE WHEN THE CONCRETE HAS REACHED A COMPRESSIVE STRENGTH OF NOT LESS THAN THE REQUIRED STRENGTH SHOWN IN THE "CONCRETE RELEASE STRENGTH" TABLE.

FOR GROUT FOR STRUCTURES, SEE SPECIAL PROVISIONS.

BILL OF MATERIAL FOR VERTICAL CONCRETE BARRIER RAIL

BAR	BARS PER PAIR OF EXTERIOR UNITS	TOTAL NO.	SIZE	TYPE	LENGTH	WEIGHT
	30' UNIT					
* B9	20		#5	STR	29'-6"	615
* S4	78		#5	2	7'-2"	583
* EPOXY COATED REINFORCING STEEL				LBS.		1198
CLASS AA CONCRETE				CU.YDS.		7.9
TOTAL VERTICAL CONCRETE BARRIER RAIL				LN. FT.		60.29

GRADE 270 STRANDS

	0.6"Ø L.R.
AREA (SQUARE INCHES)	0.217
ULTIMATE STRENGTH (LBS. PER STRAND)	58,600
APPLIED PRESTRESS (LBS. PER STRAND)	43,950

DEAD LOAD DEFLECTION AND CAMBER

	3'-0" x 1'-9"
30' CORED SLAB UNIT	0.6"Ø L.R. STRAND
CAMBER (SLAB ALONE IN PLACE)	½" ↑
DEFLECTION DUE TO SUPERIMPOSED DEAD LOAD**	⅛" ↓
FINAL CAMBER	⅜" ↑

** INCLUDES FUTURE WEARING SURFACE

CORED SLABS REQUIRED

	NUMBER	LENGTH	TOTAL LENGTH
30' UNIT			
EXTERIOR C.S.	2	30'-0"	60'-0"
INTERIOR C.S.	7	30'-0"	210'-0"
TYPE III C.S.	1	30'-0"	30'-0"
TOTAL	10		300'-0"

CONCRETE RELEASE STRENGTH

UNIT	PSI
30' UNIT	4000

GUTTERLINE ASPHALT THICKNESS & RAIL HEIGHT

27'-10" CLEAR ROADWAY	ASPHALT OVERLAY THICKNESS	RAIL HEIGHT
	@ MID-SPAN	@ MID-SPAN
	NORMAL CROWN SECTION	
30' UNIT	3⅜"	3'-9⅝"

PROJECT NO. 17BP.14.R.10
HAYWOOD COUNTY
STATION: 12+16.00 -L-

STATE OF NORTH CAROLINA
DEPARTMENT OF TRANSPORTATION
RALEIGH

STANDARD 3'-0" X 1'-9" PRESTRESSED CONCRETE CORED SLAB UNIT 120° SKEW

NORTH CAROLINA PROFESSIONAL SEAL 14047 ENGINEER STEPHEN D. COX
4/18/13

1 REVISED TO ADD DETAIL FOR TAPER AT END OF VERTICAL CONCRETE BARRIER RAIL

THE LOUIS BERGER GROUP, Inc.
1001 Wade Avenue, Suite 400
Raleigh, NC 27605-3322

REVISIONS							
NO.	BY:	DATE:	NO.	BY:	DATE:	SHEET NO.	S-12
1	RCK	10/8/12	3			TOTAL SHEETS	20
2			4				

ASSEMBLED BY : R. KNIGHT DATE : JULY 2012
CHECKED BY : M. PAYNE DATE : AUG 2012
DRAWN BY : DGE 5/09
CHECKED BY : BCH 6/09
REV. 12/11 MAA/AAC

STD. NO. 21"PCS3_30_120S

G:\OR Projects\OR1100 - NCDOT Group W\430216\Structures\430216_SD_PCS05.DGN
4/18/2013 1100_PDF_full.plt cfg 1100_str.tbl

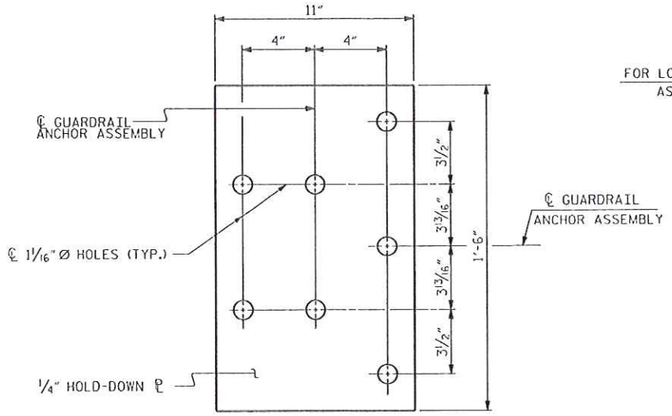

PLAN

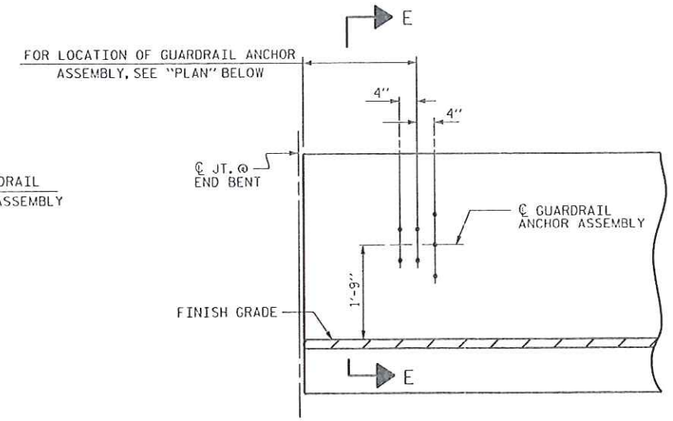

END VIEW

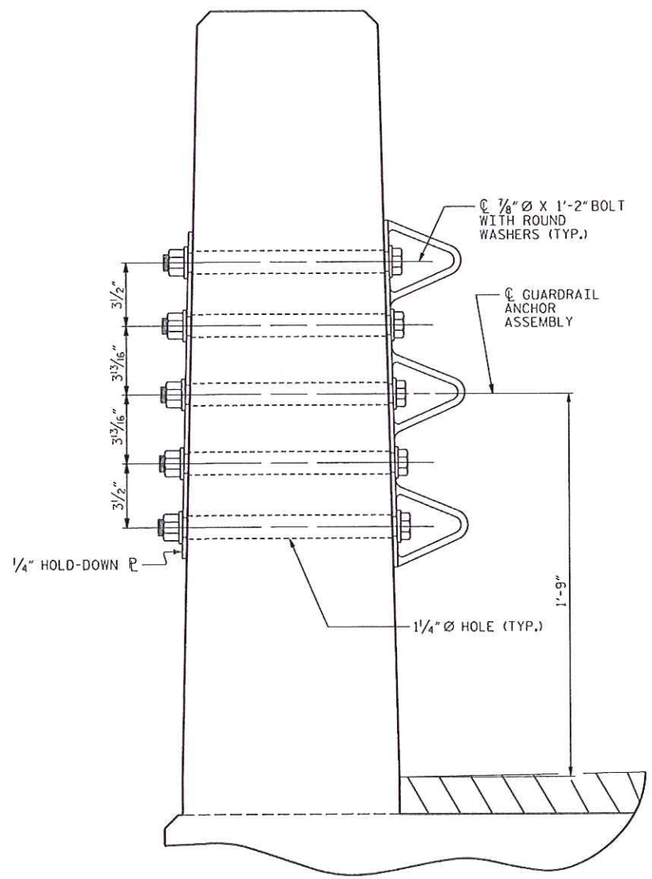

SECTION E-E

GUARDRAIL ANCHOR ASSEMBLY DETAILS

NOTES

THE GUARDRAIL ANCHOR ASSEMBLY SHALL CONSIST OF A 1/4" HOLD DOWN PLATE AND 7 - 7/8" Ø BOLTS WITH NUTS AND WASHERS.

THE HOLD-DOWN PLATE SHALL CONFORM TO AASHTO M270 GRADE 36. AFTER FABRICATION, THE HOLD-DOWN PLATE SHALL BE HOT-DIP GALVANIZED IN ACCORDANCE WITH AASHTO M111.

BOLTS SHALL CONFORM TO THE REQUIREMENTS OF ASTM A307 AND NUTS SHALL CONFORM TO THE REQUIREMENTS OF AASHTO M291. BOLTS, NUTS AND WASHERS SHALL BE GALVANIZED. (AT THE CONTRACTOR'S OPTION, STAINLESS STEEL BOLTS, NUTS AND WASHERS MAY BE USED AS AN ALTERNATE FOR THE 7/8" Ø GALVANIZED BOLTS, NUTS AND WASHERS. THEY SHALL CONFORM TO OR EXCEED THE MECHANICAL REQUIREMENTS OF ASTM A307. THE USE OF THIS ALTERNATE SHALL BE APPROVED BY THE ENGINEER.)

THE GUARDRAIL ANCHOR ASSEMBLY IS REQUIRED AT ALL POINTS WHERE APPROACH GUARDRAIL IS TO BE ATTACHED TO THE END OF BARRIER RAIL. FOR POINTS OF ATTACHMENT, SEE SKETCH.

AFTER INSTALLATION, THE EXPOSED THREAD OF THE BOLT SHALL BE BURRED WITH A SHARP POINTED TOOL.

THE COST OF THE GUARDRAIL ANCHOR ASSEMBLY SHALL BE INCLUDED IN THE UNIT CONTRACT PRICE BID FOR VERTICAL CONCRETE BARRIER RAIL.

THE VERTICAL REINFORCING BARS MAY BE SHIFTED SLIGHTLY IN THE VERTICAL CONCRETE BARRIER RAIL TO CLEAR ASSEMBLY BOLTS.

THE 1 1/4" Ø HOLES SHALL BE FORMED OR DRILLED WITH A CORE BIT. IMPACT TOOLS WILL NOT BE PERMITTED. ANY CONCRETE DAMAGED BY THIS WORK SHALL BE REPAIRED TO THE SATISFACTION OF THE ENGINEER.

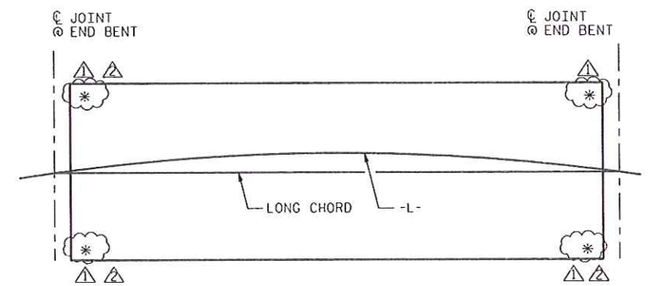

SKETCH SHOWING POINTS OF ATTACHMENT

*LOCATION OF GUARDRAIL ATTACHMENT

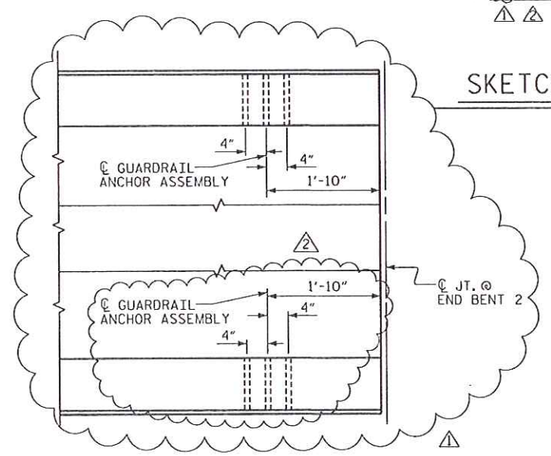

PLAN

(END BENT 2 SHOWN, END BENT 1 SIMILAR)

LOCATION OF ANCHORS FOR GUARDRAIL

PROJECT NO. 17BP.14.R.10

HAYWOOD COUNTY

STATION: 12+16.00 -L-

STATE OF NORTH CAROLINA
DEPARTMENT OF TRANSPORTATION
RALEIGH

STANDARD
GUARDRAIL ANCHORAGE FOR VERTICAL CONCRETE BARRIER RAIL

NORTH CAROLINA PROFESSIONAL SEAL 14047 ENGINEER STEPHEN D. COX
5/9/13

THE LOUIS BERGER GROUP, Inc.
1001 Wade Avenue, Suite 400
Raleigh, NC 27605-3322

REVISIONS						SHEET NO.
NO.	BY:	DATE:	NO.	BY:	DATE:	S-13
1	SDC	4/2013	3			TOTAL SHEETS
2			4			20

STD. NO. GRA3

1 REVISED DIMENSION AS PER NCDOT COMMENTS 4/11/13

2 REVISED TO ADD GUARDRAIL AS PER NCDOT COMMENTS 5/08/13

DRAWN BY : MAA 5/10	ADDED 5/6/10		
CHECKED BY : GM 5/10	REV. 10/1/11	MAA/GM	
	REV. 12/5/11	MAA/GM	
DRAWN BY : R. KNIGHT	DATE : JULY 2012		
CHECKED BY : M. PAYNE	DATE : JULY 2012		

g:\OR Projects\OR1100 - NCDOT Group W\430216\Structures\430216_SO_GRA.DGN
1100_PDF_full.pltcfg 1100_str.tbl
5/9/2013

NOTES:

FOR MECHANICAL BUTT SPLICING FOR REINFORCING STEEL, SEE SECTION 425-5 OF THE STANDARD SPECIFICATIONS.

THE MECHANICAL COUPLERS SHALL BE USED TO JOIN THE #8 "T" BARS IN STAGE 1 WITH THE #8 "T" BARS IN STAGE 2. THE LOCATION OF THE COUPLERS SHALL BE STAGGERED ON ALTERNATE BARS BY 1 FOOT AND THE #8 "T" BARS SHALL BE CUT ACCORDINGLY TO ALLOW A MINIMUM OF 1'-0" AND A MAXIMUM OF 1'-9" INTO STAGE 2 CONSTRUCTION.

THE CONTRACTOR'S ATTENTION IS CALLED TO THE FACT THAT THE LENGTHS OF THE #8 "T" BARS AT THE STAGED CONSTRUCTION JOINT MAY NEED TO BE ADJUSTED DUE TO THE TYPE OF MECHANICAL BUTT SPLICE CHOSEN BY THE CONTRACTOR. NO ADDITIONAL PAYMET WILL BE MADE FOR ANY ADJUSTMENT REQUIRED.

MECHANICAL COUPLERS MAY ALSO BE USED TO JOIN THE #4 "B" BARS IN STAGE 2. THE LOCATION OF THE COUPLERS SHALL BE STAGGERED ON ALTERNATE BARS BY 1 FOOT AND THE #4 "B" BARS SHALL BE CUT ACCORDINGLY TO ALLOW A MINIMUM OF 1'-0" AND A MAXIMUM OF 1'-9" INTO STAGE 2 CONSTRUCTION. NO ADDITIONAL PAYMENT WILL BE MADE FOR ANY ADJUSTMENT REQUIRED.

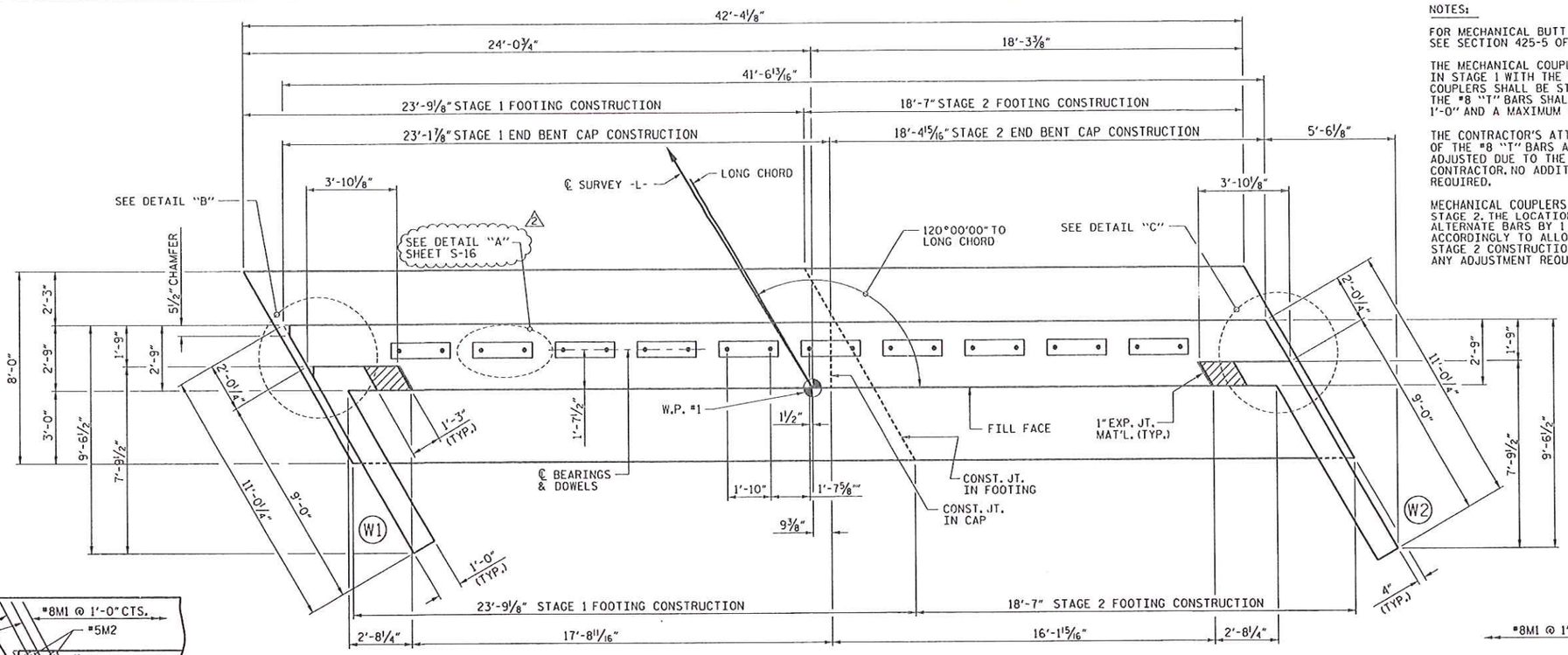

PLAN

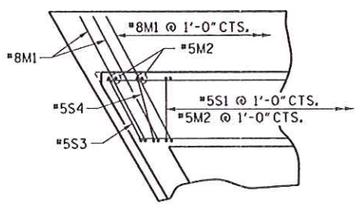

DETAIL "B"

SHOWING PLACEMENT OF SPLAYED #5S3 & #5S4

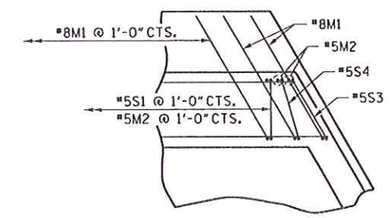

DETAIL "C"

SHOWING PLACEMENT OF SPLAYED #5S3 & #5S4

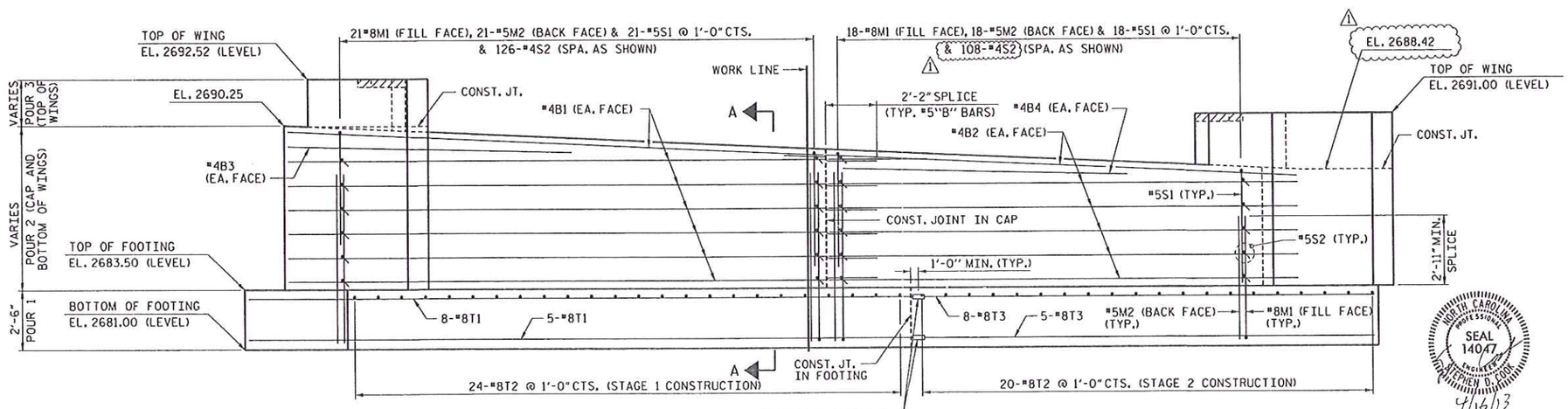

ELEVATION

1 REVISED S2 BARS, TOP OF CAP ELEV.

2 REVISED SHEET REFERENCE AS PER NCDOT COMMENTS 4/11/13

PROJECT NO. 17BP.14.R.10

HAYWOOD COUNTY

STATION: 12+16.00 -L-

SHEET 1 OF 3

STATE OF NORTH CAROLINA
DEPARTMENT OF TRANSPORTATION
RALEIGH

SUBSTRUCTURE
END BENT 1

NORTH CAROLINA PROFESSIONAL SEAL 14047 ENGINEER STEPHEN D. COOK
4/16/13

THE LOUIS BERGER GROUP, Inc.
1001 Wade Avenue, Suite 400
Raleigh, NC 27605-3322

REVISIONS							
NO.	BY:	DATE:	NO.	BY:	DATE:		
1	SDC	2/2013	3				
2	SDC	4/2013	4				

SHEET NO. S-14

TOTAL SHEETS 20

DRAWN BY : R. KNIGHT DATE : JULY 2012

CHECKED BY : S. COOK DATE : AUG 2012

G:\OR Projects\OR100 - NCDOT Group W\430216\Structures\430216_SD_EB101.DGN
4/16/2013 1100_PDF_fullplotfg 1100_str.tbl

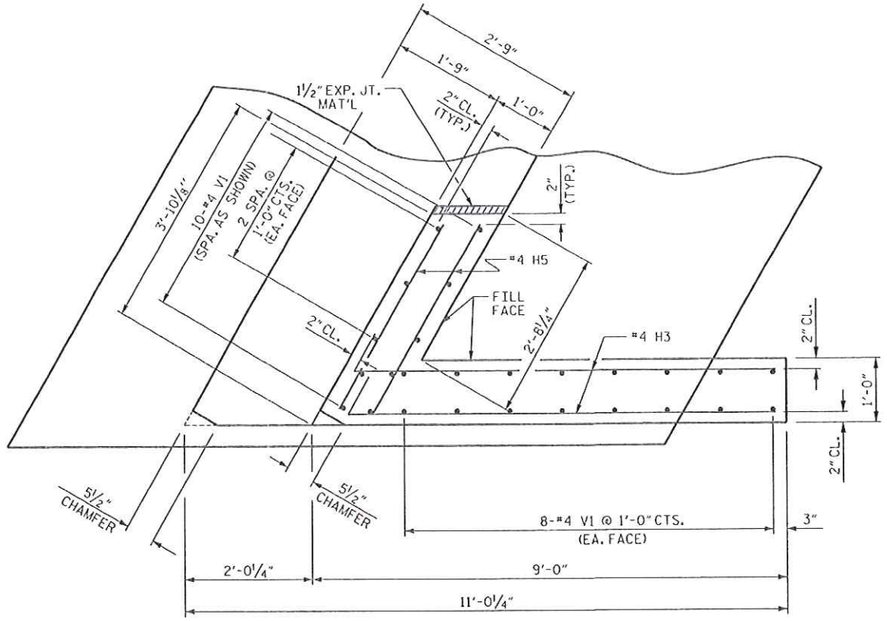

PLAN OF WING (W1)

(STAGE 1)

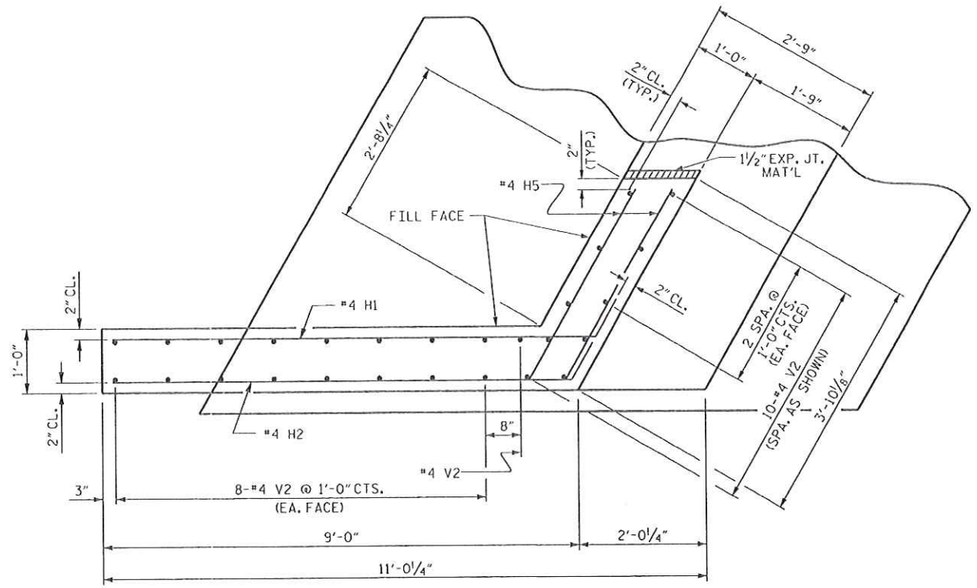

PLAN OF WING (W2)

(STAGE 2)

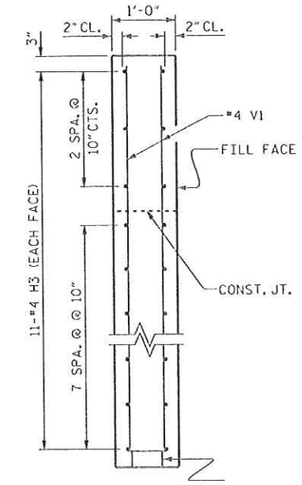

SECTION X-X

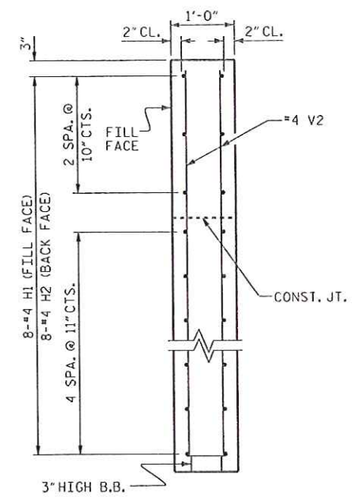

SECTION Y-Y

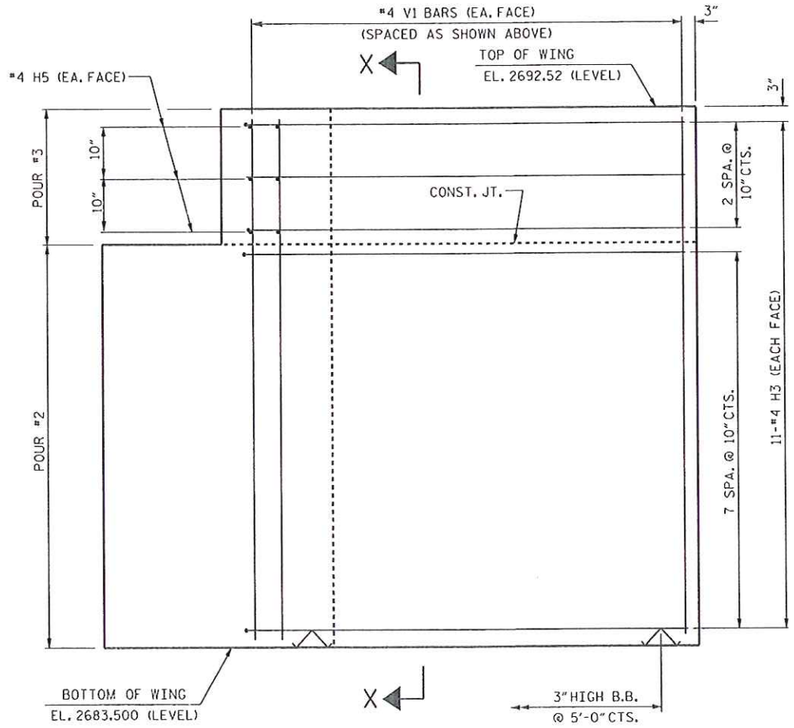

ELEVATION OF WING (W1)

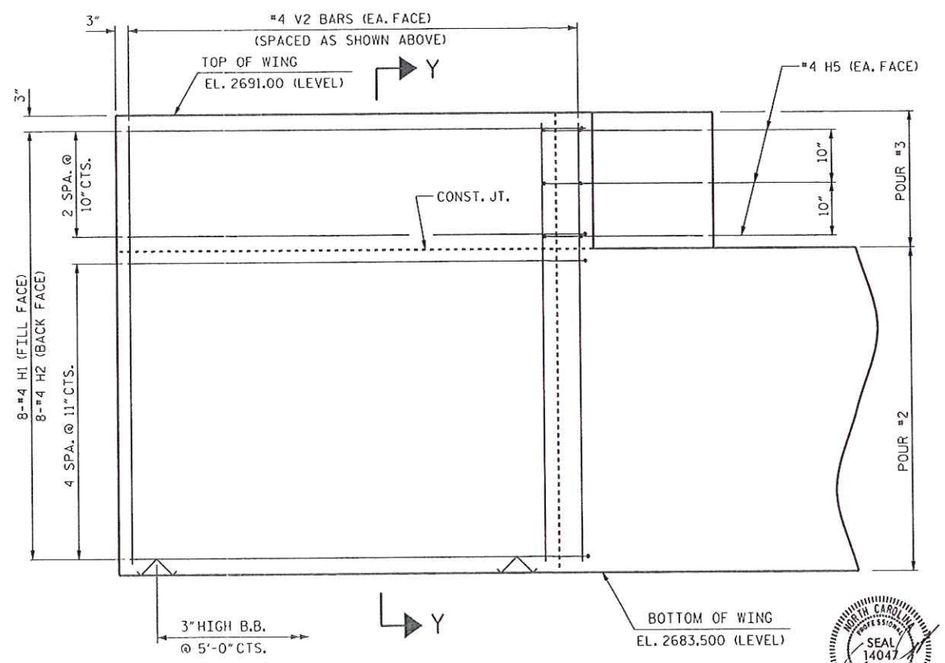

ELEVATION OF WING (W2)

WING DETAILS

PROJECT NO. 17BP.14.R.10

HAYWOOD COUNTY

STATION: 12+16.00 -L-

SHEET 2 OF 3

STATE OF NORTH CAROLINA
DEPARTMENT OF TRANSPORTATION
RALEIGH

SUBSTRUCTURE
END BENT 1
WING DETAILS

NORTH CAROLINA PROFESSIONAL SEAL 14047 ENGINEER STEPHEN D. COOK
4/18/13

THE LOUIS BERGER GROUP, Inc.
1001 Wade Avenue, Suite 400
Raleigh, NC 27605-3322

REVISIONS							
NO.	BY:	DATE:	NO.	BY:	DATE:	SHEET NO.	S-15
1			3			TOTAL SHEETS	20
2			4				

DRAWN BY : R. KNIGHT DATE : JULY 2012
CHECKED BY : S. COOK DATE : AUG 2012

C:\OR Projects\OR1100 - NCDOT Group W\430216\Structures\430216_SD_EB102.DGN
4/18/2013 1100_PDF_full.pltcfg 1100_str.tbl

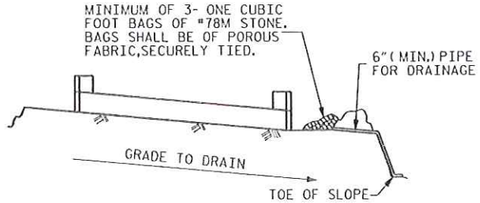

BAGGED STONE AND PIPE SHALL BE PLACED IMMEDIATELY AFTER COMPLETION OF END BENT EXCAVATION. PIPE MAY BE EITHER CONCRETE, CORRUGATED STEEL, CORRUGATED ALUMINUM ALLOY, OR CORRUGATED PLASTIC. PERFORATED PIPE WILL NOT BE ALLOWED.

BAGGED STONE SHALL REMAIN IN PLACE UNTIL THE ENGINEER DIRECTS THAT IT BE REMOVED. THE CONTRACTOR SHALL REMOVE AND DISPOSE OF SILT ACCUMULATIONS AT BAGGED STONE WHEN SO DIRECTED BY THE ENGINEER. BAGS SHALL BE REMOVED AND REPLACED WHENEVER THE ENGINEER DETERMINES THAT THEY HAVE DETERIORATED AND LOST THEIR EFFECTIVENESS.

NO SEPARATE PAYMENT WILL BE MADE FOR THIS WORK AND THE ENTIRE COST OF THIS WORK SHALL BE INCLUDED IN THE UNIT CONTRACT PRICE BID FOR THE SEVERAL PAY ITEMS.

TEMPORARY DRAINAGE AT END BENT

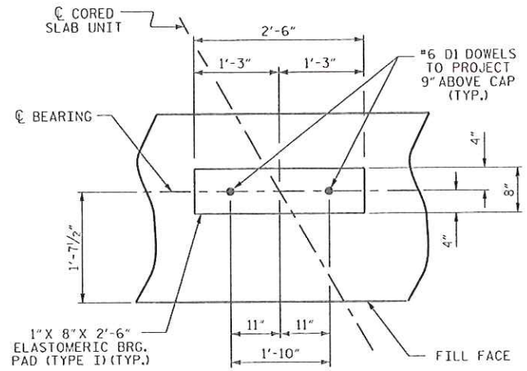

DETAIL "A"

(END BENT No. 1 SHOWN, END BENT No. 2 SIMILAR BY ROTATION)

BAR TYPES

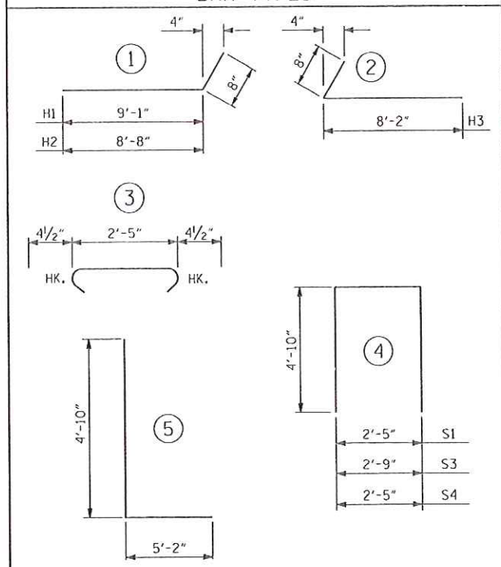

ALL BAR DIMENSIONS ARE OUT TO OUT.

BILL OF MATERIAL

STAGE 1 CONSTRUCTION

BAR	NO.	SIZE	TYPE	LENGTH	WEIGHT
B1	14	4	STR	25'-3"	236
B3	2	4	STR	12'-0"	16
D1	11	6	STR	1'-6"	25
H3	22	4	2	8'-10"	130
H5	6	4	STR	3'-2"	13
M1	23	8	5	10'-0"	614
M2	23	5	STR	7'-3"	174
S1	21	5	4	12'-1"	265
S2	126	4	3	3'-2"	267
S3	1	5	4	12'-5"	13
S4	1	5	4	12'-1"	13
T1	13	8	STR	24'-9"	859
T2	24	8	STR	8'-9"	561
V1	26	4	STR	8'-6"	148
TOTAL REINFORCING STEEL					3334 LBS.

CLASS A CONCRETE BREAKDOWN

POUR #1 FOOTING	17.6 C.Y.
POUR #2 CAP, LOWER PART OF WING	12.8 C.Y.
POUR #3 UPPER PART OF WING	1.0 C.Y.
TOTAL CLASS A CONCRETE	31.4 C.Y.

STAGE 2 CONSTRUCTION

BAR	NO.	SIZE	TYPE	LENGTH	WEIGHT
B2	14	4	STR	18'-5"	172
B4	2	4	STR	10'-0"	13
D1	9	6	STR	1'-6"	20
H1	8	4	1	9'-9"	52
H2	8	4	1	9'-4"	50
H5	6	4	STR	3'-2"	13
M1	20	8	5	10'-0"	534
M2	20	5	STR	7'-3"	151
S1	18	5	4	12'-1"	227
S2	108	4	3	3'-2"	228
S3	1	5	4	12'-5"	13
S4	1	5	4	12'-1"	13
T2	20	8	STR	8'-9"	467
T3	13	8	STR	18'-3"	633
V2	26	4	STR	7'-0"	122
TOTAL REINFORCING STEEL					2708 LBS.

CLASS A CONCRETE BREAKDOWN

POUR #1 FOOTING	13.8 C.Y.
POUR #2 CAP, LOWER PART OF WING	9.9 C.Y.
POUR #3 UPPER PART OF WING	1.0 C.Y.
TOTAL CLASS A CONCRETE	24.7 C.Y.

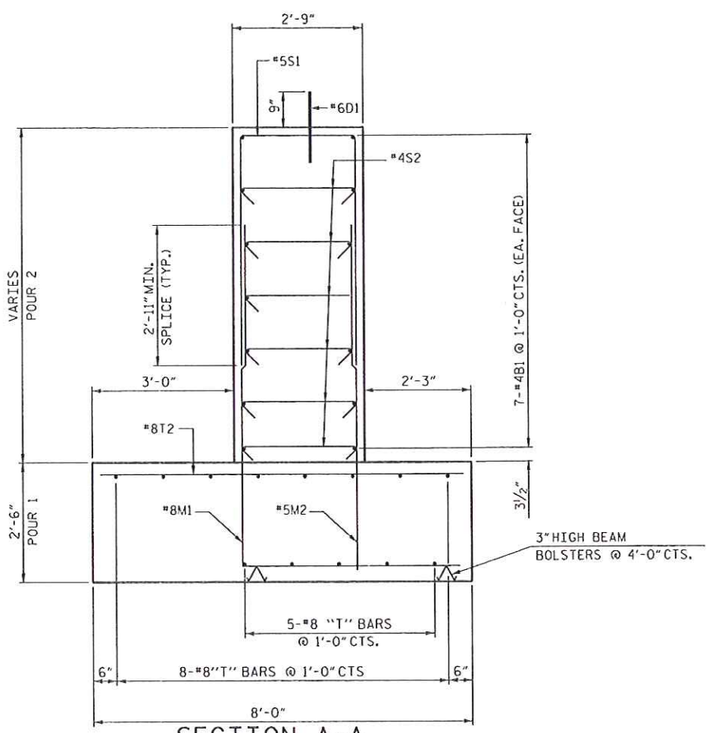

SECTION A-A

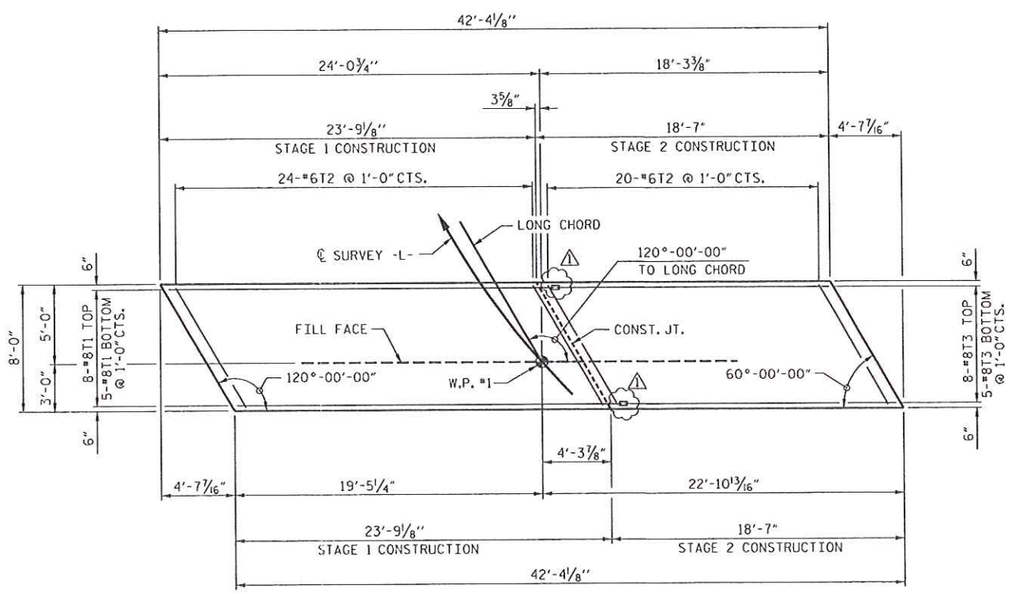

PLAN VIEW OF FOOTING LAYOUT

PROJECT NO. 17BP.14.R.10
HAYWOOD COUNTY
STATION: 12+16.00 -L-

SHEET 3 OF 3

STATE OF NORTH CAROLINA
DEPARTMENT OF TRANSPORTATION
RALEIGH

SUBSTRUCTURE

END BENT No. 1
DETAILS

NORTH CAROLINA PROFESSIONAL ENGINEER SEAL 14047 STEPHEN D. COOK
4/16/13

THE LOUIS BERGER GROUP, Inc.
1001 Wade Avenue, Suite 400
Raleigh, NC 27605-3322

REVISIONS							SHEET NO.
NO.	BY:	DATE:	NO.	BY:	DATE:		S-16
1	SDC	4/2013	3				TOTAL SHEETS
2			4				20

⚠ REVISED SPLICE AS PER NCDOT COMMENTS 4/11/2013

DRAWN BY : R. KNIGHT DATE : JULY 2012
CHECKED BY : S. COOK DATE : AUG 2012

G:\OR Projects\OR1100 - NCDOT Group W\430216\Structures\430216_SD_EB103.DGN
4/16/2013 1100_PDF_fullplate.fg 1100_str_tbl

NOTES

FOR MECHANICAL BUTT SPLICING FOR REINFORCING STEEL, SEE SECTION 425-5 OF THE STANDARD SPECIFICATIONS.

MECHANICAL COUPLERS SHALL BE USED TO JOIN THE #8 "T" BARS IN STAGE 1 WITH THE #8 "T" BARS IN STAGE 2. THE LOCATION OF THE COUPLERS SHALL BE STAGGERED ON ALTERNATE BARS BY 1 FOOT AND THE #8 "T" BARS SHALL BE CUT ACCORDINGLY TO ALLOW A MINIMUM OF 1'-0" AND A MAXIMUM OF 1'-9" INTO STAGE 2 CONSTRUCTION.

THE CONTRACTOR'S ATTENTION IS CALLED TO THE FACT THAT THE LENGTHS OF THE #8 "T" BARS AT THE STAGED CONSTRUCTION JOINT MAY NEED TO BE ADJUSTED DUE TO THE TYPE OF MECHANICAL BUTT SPLICE CHOSEN BY THE CONTRACTOR. NO ADDITIONAL PAYMENT WILL BE MADE FOR ANY ADJUSTMENT REQUIRED.

MECHANICAL COUPLERS MAY ALSO BE USED TO JOIN THE #4 "B" BARS IN STAGE 1 WITH THE #4 "B" BARS IN STAGE 2. THE LOCATION OF THE COUPLERS SHALL BE STAGGERED ON ALTERNATE BARS BY 1 FOOT AND THE #4 "B" BARS SHALL BE CUT ACCORDINGLY TO ALLOW A MINIMUM OF 1'-0" AND A MAXIMUM OF 1'-9" INTO STAGE 2 CONSTRUCTION. NO ADDITIONAL PAYMENT WILL BE MADE FOR ANY ADJUSTMENT REQUIRED.

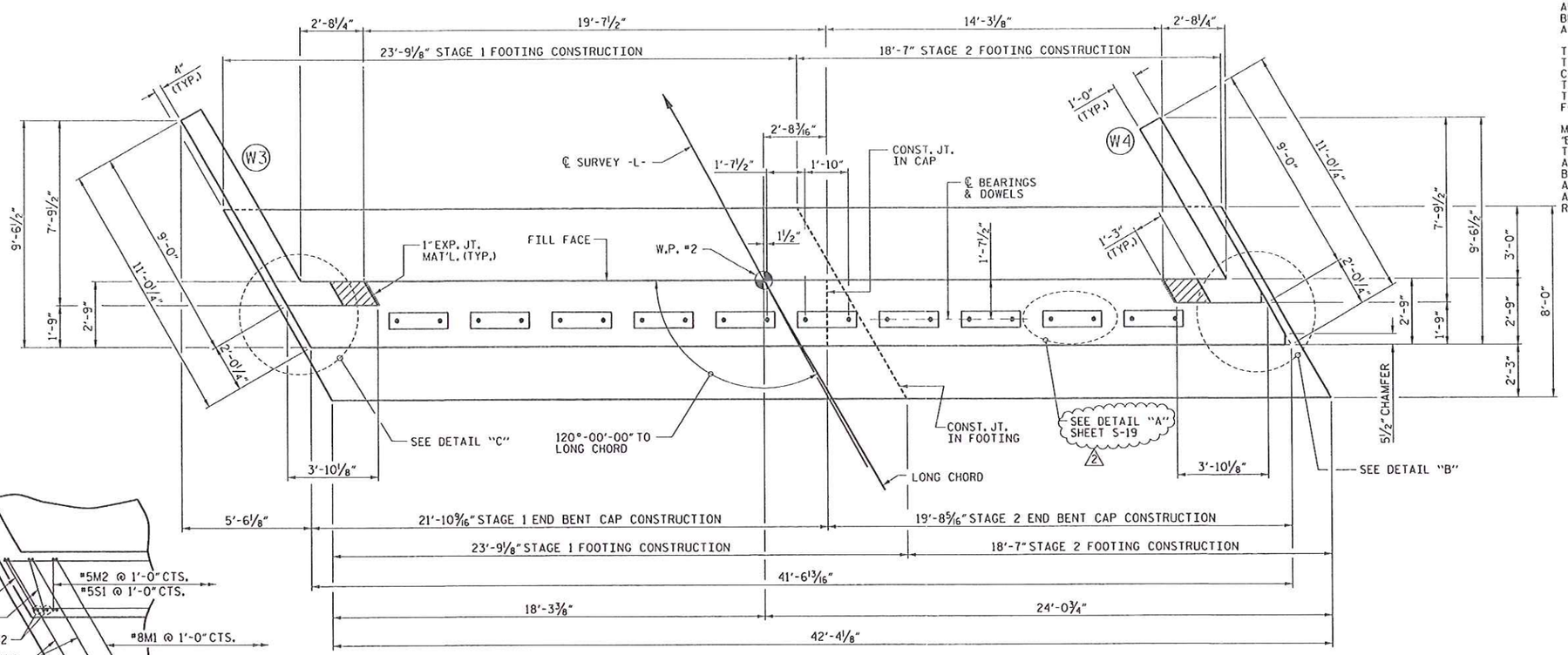

PLAN

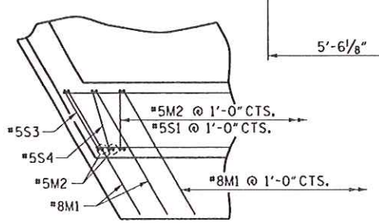

DETAIL "C"

SHOWING PLACEMENT OF SPLAYED #5S3 & #5S4

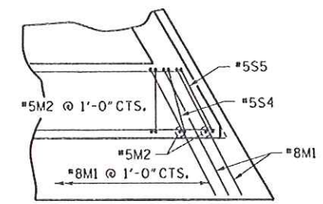

DETAIL "B"

SHOWING PLACEMENT OF SPLAYED #5S4 & #5S5

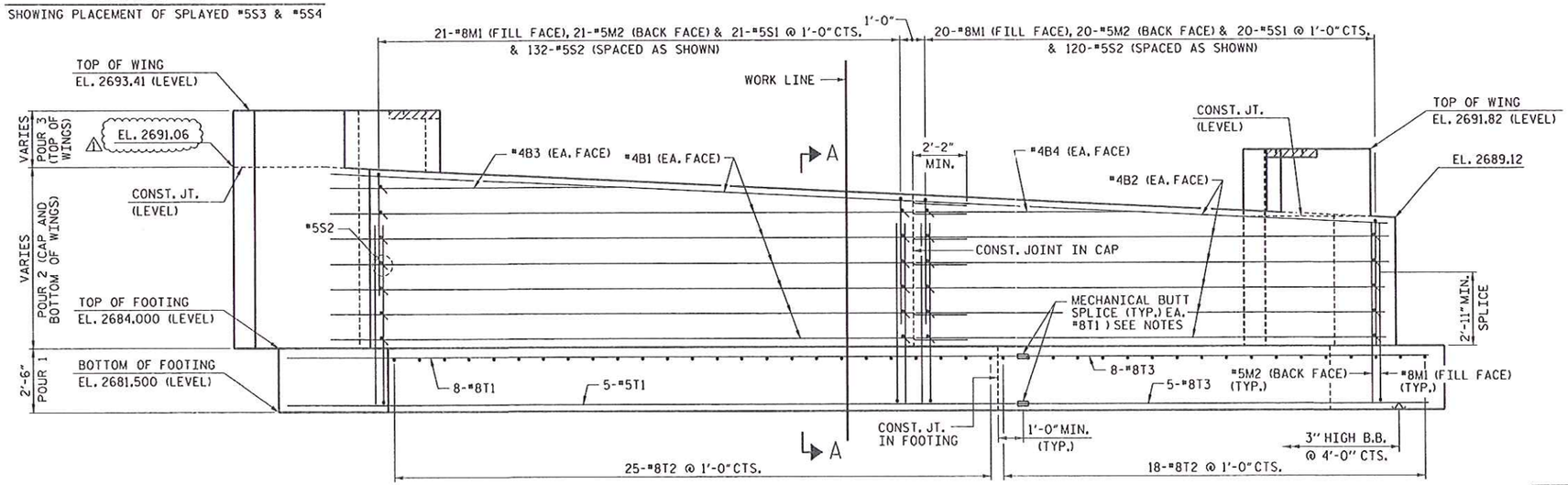

ELEVATION

1 REVISED CAP ELEV.

2 REVISED SHEET REFERENCE AS PER NCDOT COMMENTS 4/11/13

PROJECT NO. 17BP.14.R.10

HAYWOOD COUNTY

STATION: 12+16.00 -L-

SHEET 1 OF 3

STATE OF NORTH CAROLINA
DEPARTMENT OF TRANSPORTATION
RALEIGH

SUBSTRUCTURE END BENT 2

NORTH CAROLINA PROFESSIONAL SEAL 14047 ENGINEER STEPHEN D. COOK

4/18/13

THE LOUIS BERGER GROUP, Inc.
1001 Wade Avenue, Suite 400
Raleigh, NC 27605-3322

REVISIONS								SHEET NO.
NO.	BY:	DATE:	NO.	BY:	DATE:			S-17
1	SDC	2/2013	3					TOTAL SHEETS
2	SDC	4/2013	4					20

DRAWN BY : R. KNIGHT DATE : JULY 2012
CHECKED BY : S. COOK DATE : AUG 2012

G:\OR Projects\OR1100 - NCDOT Group W\430216\Structures\430216_SD_EB201.DGN
4/16/2013 1100_PDF_full.pltcfg 1100_str.tbl

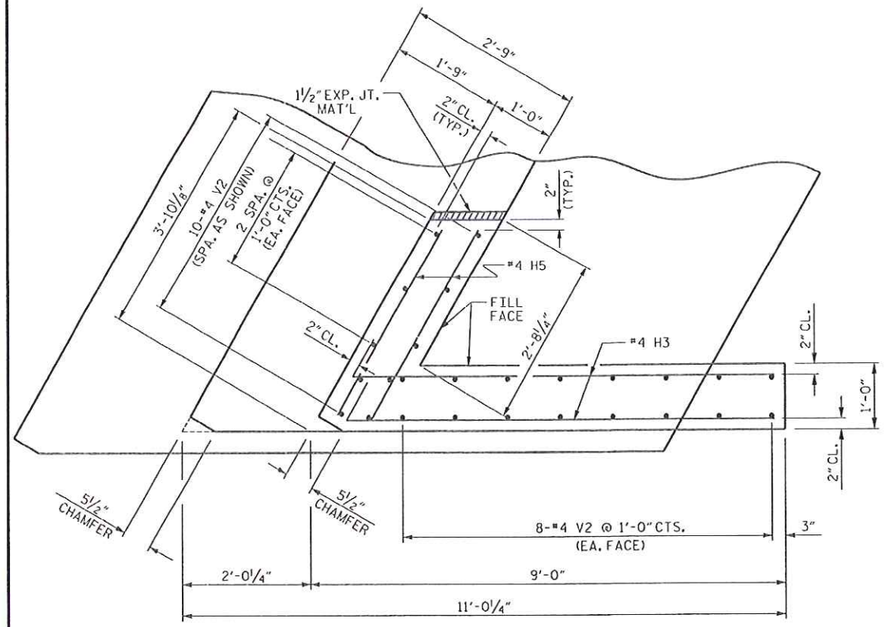

PLAN OF WING (W4)

STAGE 2 CONSTRUCTION

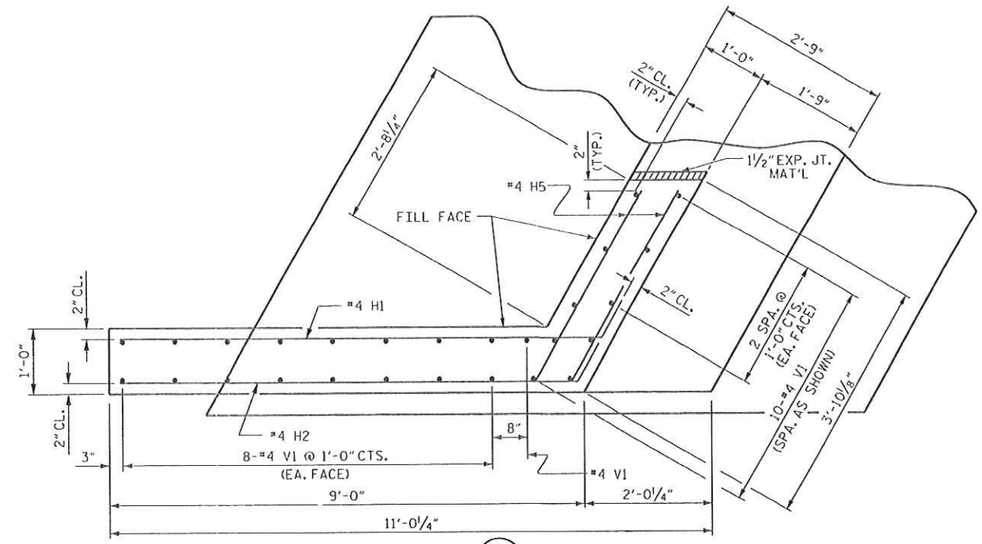

PLAN OF WING (W3)

STAGE 1 CONSTRUCTION

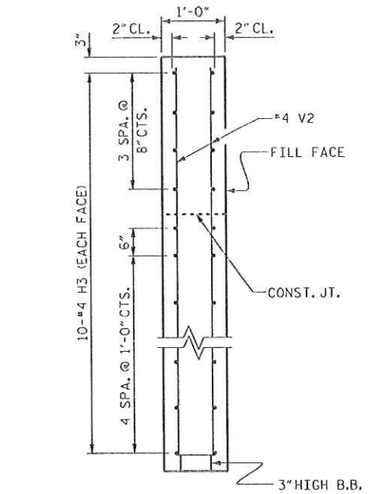

SECTION X-X

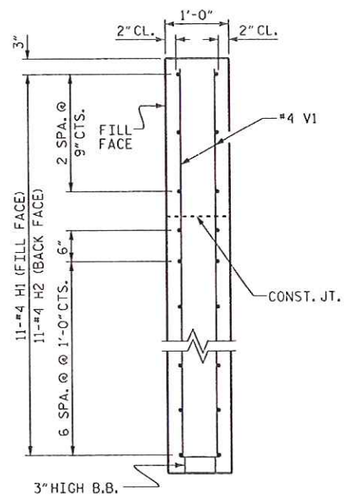

SECTION Y-Y

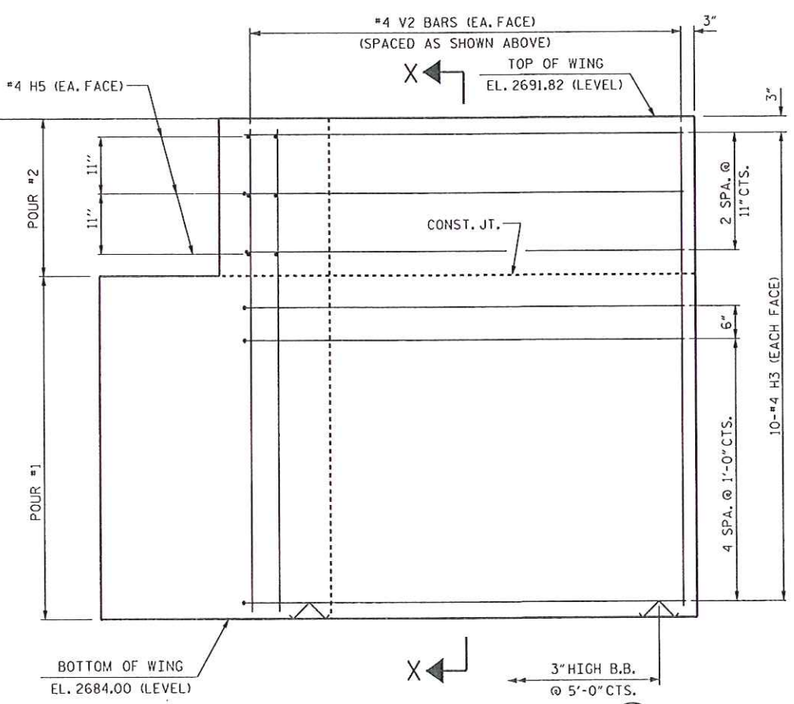

ELEVATION OF WING (W4)

STAGE 2 CONSTRUCTION

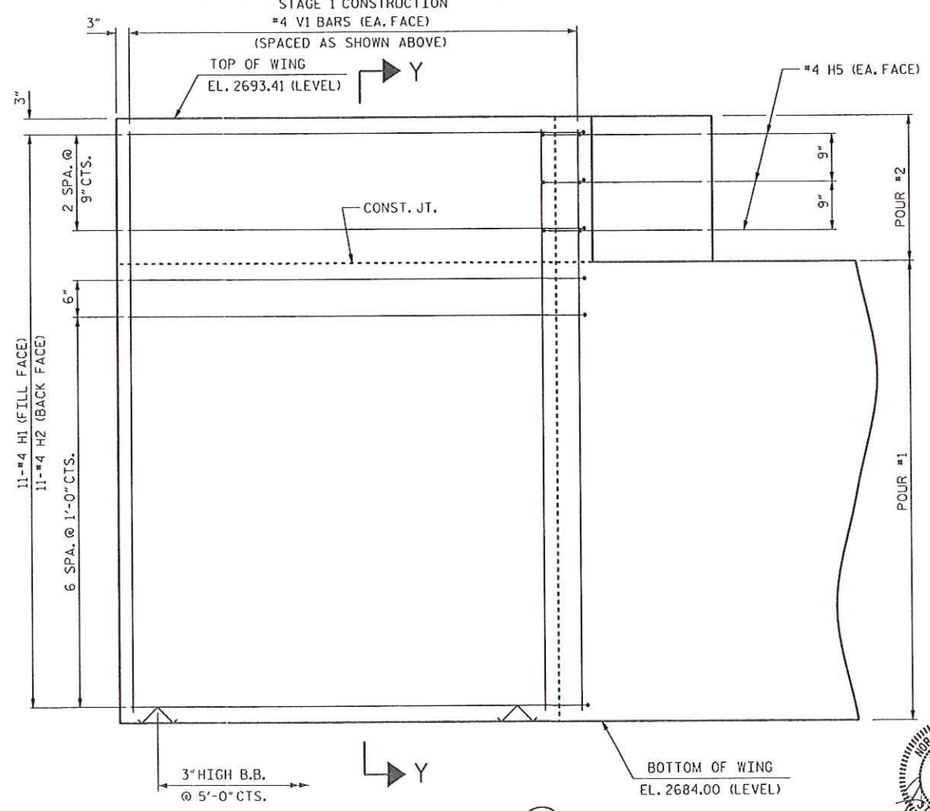

ELEVATION OF WING (W3)

STAGE 1 CONSTRUCTION

WING DETAILS

PROJECT NO. 17BP.14.R.10

HAYWOOD COUNTY

STATION: 12+16.00 -L-

SHEET 2 OF 3

STATE OF NORTH CAROLINA
DEPARTMENT OF TRANSPORTATION
RALEIGH

SUBSTRUCTURE
END BENT 2

NORTH CAROLINA PROFESSIONAL SEAL 14047 ENGINEER STEPHEN D. COOK

THE LOUIS BERGER GROUP, Inc.
1001 Wade Avenue, Suite 400
Raleigh, NC 27605-3322

REVISIONS						SHEET NO.
NO.	BY:	DATE:	NO.	BY:	DATE:	S-18
1			3			TOTAL SHEETS
2			4			20

ASSEMBLED BY :	R. KNIGHT	DATE : JULY 2012
CHECKED BY :	S. COOK	DATE : JULY 2012
DRAWN BY :	WJH 12/11	
CHECKED BY :	AAC 12/11	

G:\OR Projects\OR1100 - NCDOT Group W\430216\Structures\430216_SD_EB202.DGN
4/18/2013 1100_PDF_full.pltcfg 1100_str.tbl

STD. NO. EB_30_120S4

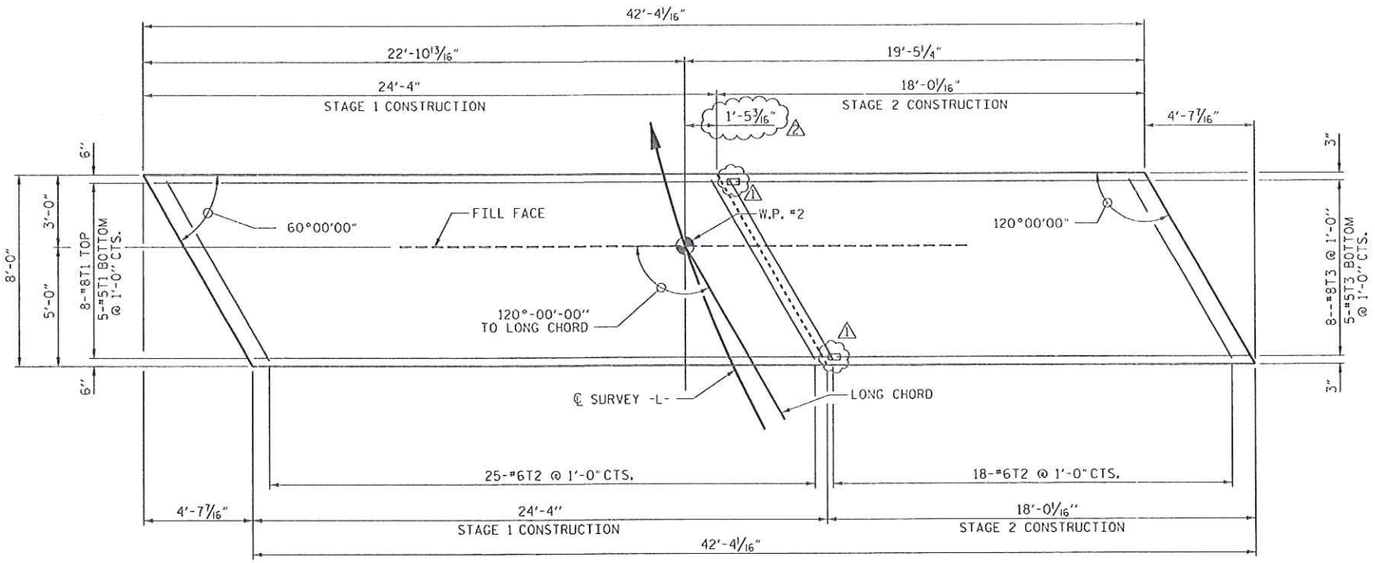

PLAN VIEW OF FOOTING LAYOUT

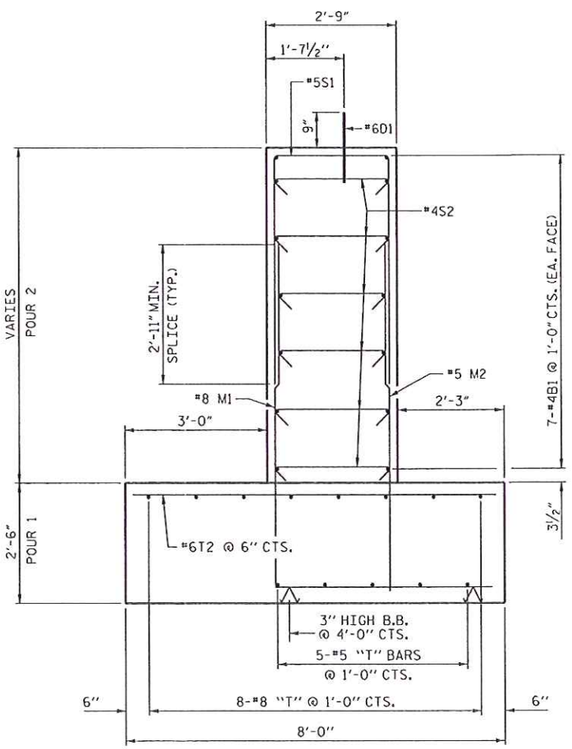

SECTION A-A

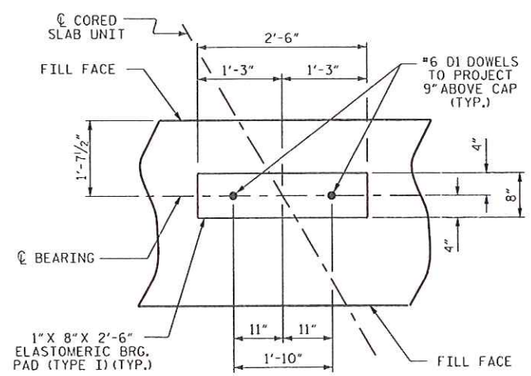

DETAIL "A"

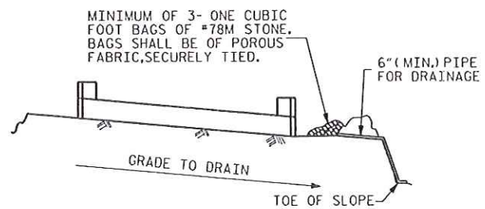

BAGGED STONE AND PIPE SHALL BE PLACED IMMEDIATELY AFTER COMPLETION OF END BENT EXCAVATION. PIPE MAY BE EITHER CONCRETE, CORRUGATED STEEL, CORRUGATED ALUMINUM ALLOY, OR CORRUGATED PLASTIC. PERFORATED PIPE WILL NOT BE ALLOWED.

BAGGED STONE SHALL REMAIN IN PLACE UNTIL THE ENGINEER DIRECTS THAT IT BE REMOVED. THE CONTRACTOR SHALL REMOVE AND DISPOSE OF SILT ACCUMULATIONS AT BAGGED STONE WHEN SO DIRECTED BY THE ENGINEER. BAGS SHALL BE REMOVED AND REPLACED WHENEVER THE ENGINEER DETERMINES THAT THEY HAVE DETERIORATED AND LOST THEIR EFFECTIVENESS.

NO SEPARATE PAYMENT WILL BE MADE FOR THIS WORK AND THE ENTIRE COST OF THIS WORK SHALL BE INCLUDED IN THE UNIT CONTRACT PRICE BID FOR THE SEVERAL PAY ITEMS.

TEMPORARY DRAINAGE AT END BENT

BILL OF MATERIAL — END BENT 2 - STAGE 1

BAR	NO.	SIZE	TYPE	LENGTH	WEIGHT
B1	14	# 4	STR	24'-0"	224
B3	2	# 4	STR	12'-0"	16
D1	11	# 6	STR	1'-6"	25
H1	11	# 4	1	9'-9"	72
H2	11	# 4	1	9'-4"	69
H5	6	# 4	STR	3'-2"	13
M1	23	# 8	5	10'-0"	614
M2	23	# 5	STR	7'-3"	174
S1	21	# 5	4	12'-1"	265
S2	126	# 4	3	3'-2"	267
S3	1	# 5	4	12'-5"	13
S4	1	# 5	4	12'-1"	13
T1	13	# 8	STR	24'-9"	859
T2	25	# 8	STR	8'-9"	584
V1	26	# 4	STR	8'-9"	152

REINFORCING STEEL 3360 LBS.

CLASS A CONCRETE BREAKDOWN

POUR #1	CAP, LOWER PART OF WING	17.6 C.Y.
POUR #2	UPPER PART OF WING	12.8 C.Y.
POUR #3	UPPER PART OF WING	1.0 C.Y.
TOTAL CLASS A CONCRETE		31.4 C.Y.

BILL OF MATERIAL — END BENT 2 - STAGE 2

BAR	NO.	SIZE	TYPE	LENGTH	WEIGHT
B2	14	# 4	STR	18'-5"	172
B4	2	# 4	STR	10'-0"	13
D1	9	# 6	STR	1'-6"	20
H3	20	# 4	2	8'-10"	118
H5	6	# 4	STR	3'-2"	13
M1	22	# 8	5	10'-0"	587
M2	22	# 5	STR	7'-3"	166
S1	20	# 5	4	12'-1"	252
S2	120	# 4	3	3'-2"	254
S3	1	# 5	4	12'-5"	13
S4	1	# 5	4	12'-1"	13
T2	18	# 8	STR	8'-9"	421
T3	13	# 8	STR	18'-3"	633
V2	26	# 4	STR	7'-2"	124

REINFORCING STEEL 2799 LBS.

CLASS A CONCRETE BREAKDOWN

POUR #1	CAP, LOWER PART OF WING	13.8 C.Y.
POUR #2	UPPER PART OF WING	9.9 C.Y.
POUR #3	UPPER PART OF WING	1.0 C.Y.
TOTAL CLASS A CONCRETE		24.7 C.Y.

BAR TYPES

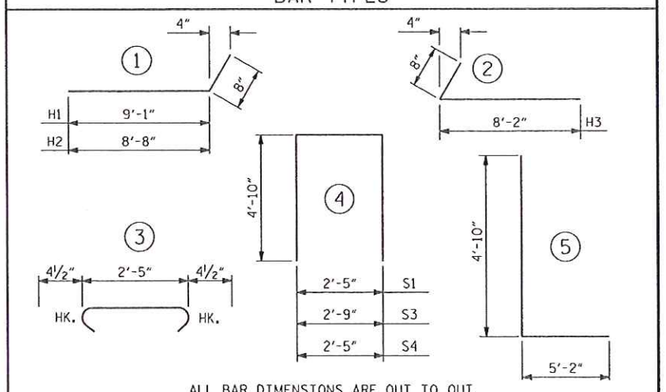

ALL BAR DIMENSIONS ARE OUT TO OUT.

PROJECT NO. 17BP.14.R.10

HAYWOOD COUNTY

STATION: 12+16.00 -L-

SHEET 3 OF 3

STATE OF NORTH CAROLINA
DEPARTMENT OF TRANSPORTATION
RALEIGH

SUBSTRUCTURE

END BENT No. 2 DETAILS

NORTH CAROLINA PROFESSIONAL SEAL 14047 ENGINEER STEPHEN D. COOK

5/9/13

ASSEMBLED BY : R. KNIGHT	DATE : JULY 2012
CHECKED BY : S. COOK	DATE : JULY 2012
DRAWN BY : WJH 12/11	
CHECKED BY : AAC 12/11	

THE LOUIS BERGER GROUP, Inc.
1001 Wade Avenue, Suite 400
Raleigh, NC 27605-3322

REVISIONS

NO.	BY:	DATE:	NO.	BY:	DATE:
1	SDC	4/2013	3		
2			4		

SHEET NO. S-19

TOTAL SHEETS 20

⚠1 REVISED SPLICE AS PER NCDOT COMMENTS 4/11/2013
⚠2 REVISED DIMENSION AS PER NCDOT COMMENTS 5/03/2013

G:\OR Projects\OR1100 - NCDOT Group W\430216\Structures\430216_SD_EB203.DGN
1100_pdf_fullsite.fg 1100_str_tbl

STD NO. EB 30 12054

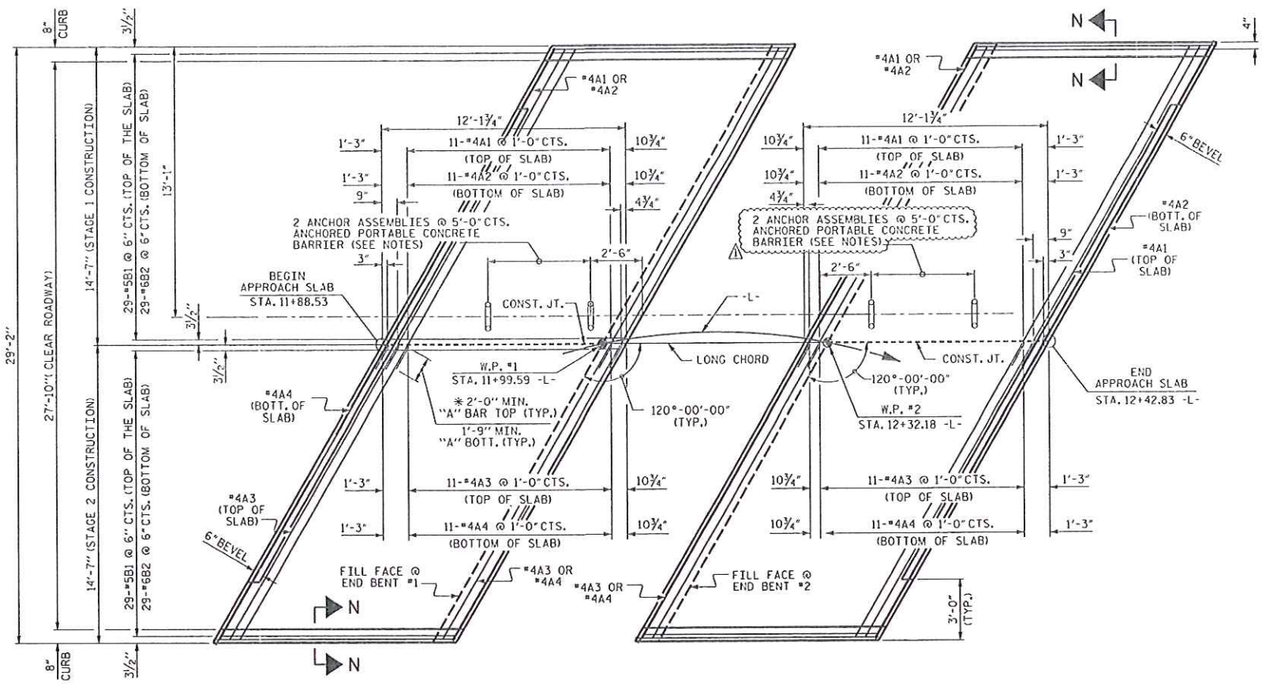

PLAN @ END BENT #1 PLAN @ END BENT #2

DIMENSIONS SHOWN ARE TYPICAL FOR BOTH APPROACH SLABS

NOTES

FOR BRIDGE APPROACH FILL INCLUDING GEOTEXTILE, 4" Ø DRAINAGE PIPE, AND #78M STONE BACKFILL, SEE ROADWAY PLANS.

GEOTEXTILE SHALL BE TYPE 1IN ACCORDANCE WITH THE STANDARD SPECIFICATIONS SECTION 1056.

#78M STONE BACKFILL (CLASS V SELECT MATERIAL) SHALL BE IN ACCORDANCE WITH STANDARD SPECIFICATIONS SECTION 1016.

#78M STONE BACKFILL IS TO BE CONTINUOUS ALONG FILL FACE OF BACKWALL FROM OUTSIDE EDGE TO OUTSIDE EDGE OF APPROACH SLAB.

FOR THE 4" Ø DRAINAGE PIPE OUTLET(S), SEE ROADWAY STANDARD DRAWINGS.

AREA BETWEEN THE WINGWALL AND APPROACH SLAB SHALL BE GRADED TO DRAIN THE WATER AWAY FROM THE FILL FACE OF THE BRIDGE AND SHALL BE PAVED. SEE ROADWAY PLANS.

APPROACH SLAB GROOVING IS NOT REQUIRED.

FOR DETAILS OF ANCHOR ASSEMBLY FOR ANCHORED PORTABLE CONCRETE BARRIER IN BRIDGE APPROACH SLABS, SEE "PRESTRESSED CONCRETE SLAB UNIT DETAILS", SHEET 2 OF 3.

ANCHOR ASSEMBLIES FOR ANCHORED PORTABLE CONCRETE BARRIER IN BRIDGE APPROACH SLABS WILL BE PAID FOR UNDER LUMP SUM PRICE FOR BRIDGE APPROACH SLABS.

BILL OF MATERIAL

APPROACH SLAB AT EB #1

STAGE 1 CONSTRUCTION

BAR	NO.	SIZE	TYPE	LENGTH	WEIGHT
* A1	13	#4	STR	19'-0"	165
A2	13	#4	STR	18'-8"	162
* B1	29	#5	STR	11'-2"	338
B2	29	#6	STR	11'-8"	508
REINFORCING STEEL				LBS.	671
* EPOXY COATED REINFORCING STEEL				LBS.	503
CLASS AA CONCRETE				C.Y.	8.4

STAGE 2 CONSTRUCTION

BAR	NO.	SIZE	TYPE	LENGTH	WEIGHT
* A3	13	#4	STR	16'-5"	143
A4	13	#4	STR	16'-5"	143
* B1	29	#5	STR	11'-2"	338
B2	29	#6	STR	11'-8"	508
REINFORCING STEEL				LBS.	651
* EPOXY COATED REINFORCING STEEL				LBS.	481
CLASS AA CONCRETE				C.Y.	8.4

APPROACH SLAB AT EB #2

STAGE 1 CONSTRUCTION

BAR	NO.	SIZE	TYPE	LENGTH	WEIGHT
* A1	13	#4	STR	19'-0'	165
A2	13	#4	STR	18'-8"	162
* B1	29	#5	STR	11'-2"	338
B2	29	#6	STR	11'-8"	508
REINFORCING STEEL				LBS.	671
* EPOXY COATED REINFORCING STEEL				LBS.	503
CLASS AA CONCRETE				C.Y.	8.4

STAGE 2 CONSTRUCTION

BAR	NO.	SIZE	TYPE	LENGTH	WEIGHT
* A3	13	#4	STR	16'-5"	143
A4	13	#4	STR	16'-5"	143
* B1	29	#5	STR	11'-2"	338
B2	29	#6	STR	11'-8"	508
REINFORCING STEEL				LBS.	651
* EPOXY COATED REINFORCING STEEL				LBS.	481
CLASS AA CONCRETE				C.Y.	8.4

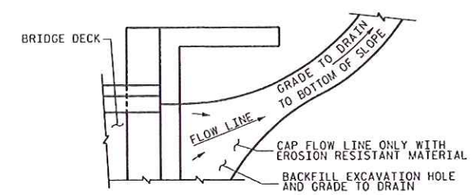

NOTE: IF THE APPROACH SLAB IS NOT CONSTRUCTED IMMEDIATELY AFTER THE BACKFILLING OF THE END BENT EXCAVATION, GRADE TO DRAIN TO THE BOTTOM OF THE SLOPE AND PROVIDE EROSION RESISTANT MATERIAL, SUCH AS FIBERGLASS ROVING OR AS DIRECTED BY THE ENGINEER TO PREVENT SOIL EROSION AND TO PROTECT THE AREA ADJACENT TO THE STRUCTURE. THE CONTRACTOR WILL BE REQUIRED TO REMOVE THESE MATERIALS PRIOR TO CONSTRUCTION OF THE APPROACH SLAB.

TEMPORARY DRAINAGE DETAIL

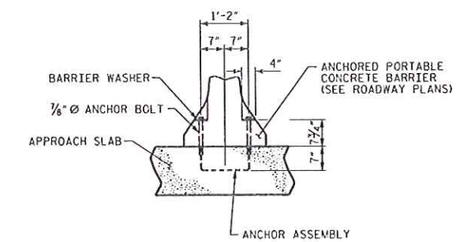

ANCHOR ASSEMBLY PLACEMENT DETAIL

SHOWING PLACEMENT OF ANCHOR ASSEMBLY

SPLICE LENGTHS		
BAR SIZE	EPOXY COATED	UNCOATED
#4	2'-0"	1'-9"
#5	2'-6"	2'-2"
#6	3'-10"	2'-7"

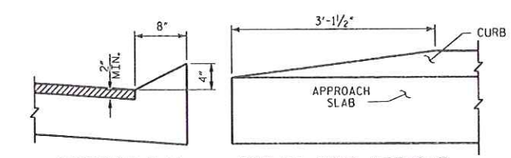

SECTION N-N END OF CURB WITHOUT SHOULDER BERM GUTTER

CURB DETAILS

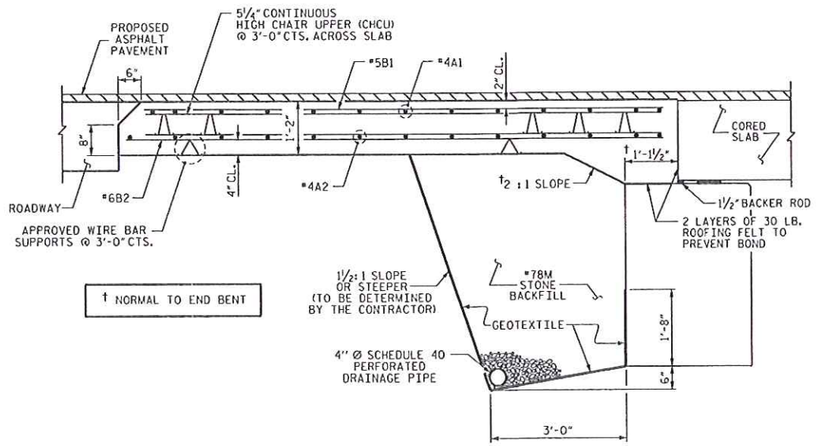

SECTION THRU SLAB

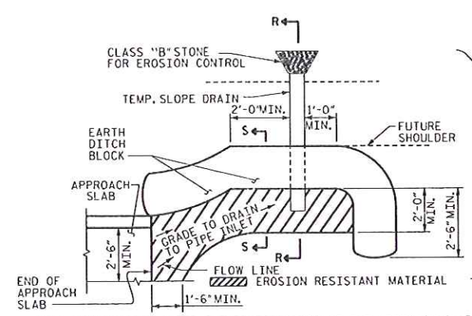

NOTE: IMMEDIATELY AFTER THE CONSTRUCTION OF THE APPROACH SLAB, THE CONTRACTOR SHALL PROVIDE TEMPORARY BERM AND SLOPE DRAIN. CONTRACTOR SHALL GRADE TO PIPE INLET AND PROVIDE EROSION RESISTANT MATERIAL AS SHOWN. THE EROSION RESISTANT MATERIAL SHALL BE EITHER 1) ASPHALT PLANT MIX, TYPE 1 OR TYPE 2, MIN. 2" DEPTH, 2) EROSION CONTROL MAT, OR 3) CONCRETE, AS DIRECTED BY THE ENGINEER. THE SLOPE DRAIN SHALL CONSIST OF A NON-PERFORATED TEMPORARY DRAINAGE PIPE, 12 INCHES IN DIAMETER.

PLAN VIEW

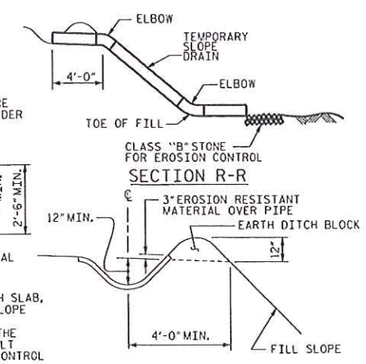

SECTION S-S

TEMPORARY BERM AND SLOPE DRAIN DETAILS

(TO BE USED WHEN SHOULDER BERM GUTTER IS REQUIRED)

⚠ REV. ANCHOR ASSEMBLY DETAIL

PROJECT NO. 17BP.14.R.10

HAYWOOD COUNTY

STATION: 12+16.00 -L-

NORTH CAROLINA PROFESSIONAL SEAL 14047 ENGINEER STEPHEN D. COOK 4/18/13

STATE OF NORTH CAROLINA
DEPARTMENT OF TRANSPORTATION
RALEIGH

STANDARD
BRIDGE APPROACH SLAB
FOR PRESTRESSED CONCRETE
CORED SLAB UNIT
(SUB-REGIONAL TIER)
120° SKEW

THE LOUIS BERGER GROUP, Inc.
1001 Wade Avenue, Suite 400
Raleigh, NC 27605-3322

REVISIONS							
NO.	BY:	DATE:	NO.	BY:	DATE:	SHEET NO.	S-20
1	SDC	2/2013	3			TOTAL SHEETS	20
2			4				

STD. NO. BAS_30_120S

ASSEMBLED BY :	J. MYA	DATE :	AUG. 2012
CHECKED BY :	M. PAYNE	DATE :	AUG. 2012
DRAWN BY : SHS/MAA 5-09	REV. 12-11	MAA/AAC	
CHECKED BY : BCH 5-09			

G:\OR Projects\OR1100 - NCDOT Group W\430216\Structures\430216_SD_AS.DGN
1100_str.tbl
1100_PDF_full.pltcfg
4/18/2013