08/17/11

TIP PROJECT: BD-5114B

CONTRACT: DN00070

See Sheet 1-A For Index of Sheets

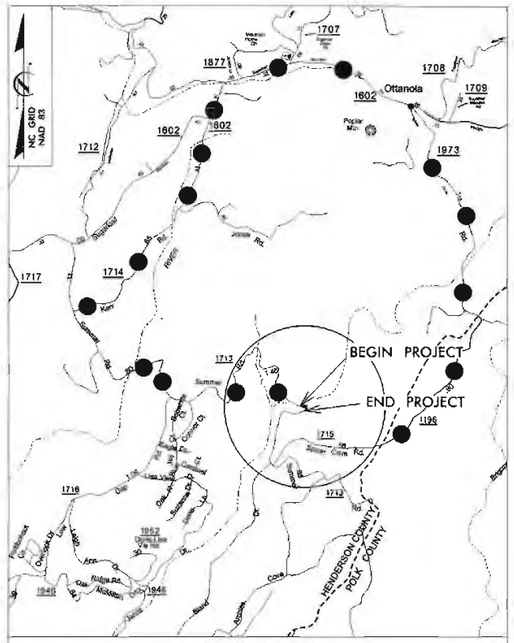

VICINITY MAP

DETOUR ROUTE

STATE OF NORTH CAROLINA
DIVISION OF HIGHWAYS

HENDERSON COUNTY

STATE	STATE PROJECT REFERENCE NO.	SHEET NO.	TOTAL SHEETS
N.C.	BD-5114B	1	

STATE PROJ. NO.	F.A. PROJ. NO.	DESCRIPTION
45360.1.2	BRZ-1713(4)	P.E.
45360.2.2	BRZ-1713(4)	R/W
45360.3.2	BRZ-1713(4)	CONST.

LOCATION: BRIDGE NO. 128 OVER HUNGRY CREEK ON SR 1713 (SUMMER RD.)

TYPE OF WORK: GRADING, DRAINAGE, PAVING AND STRUCTURE

4

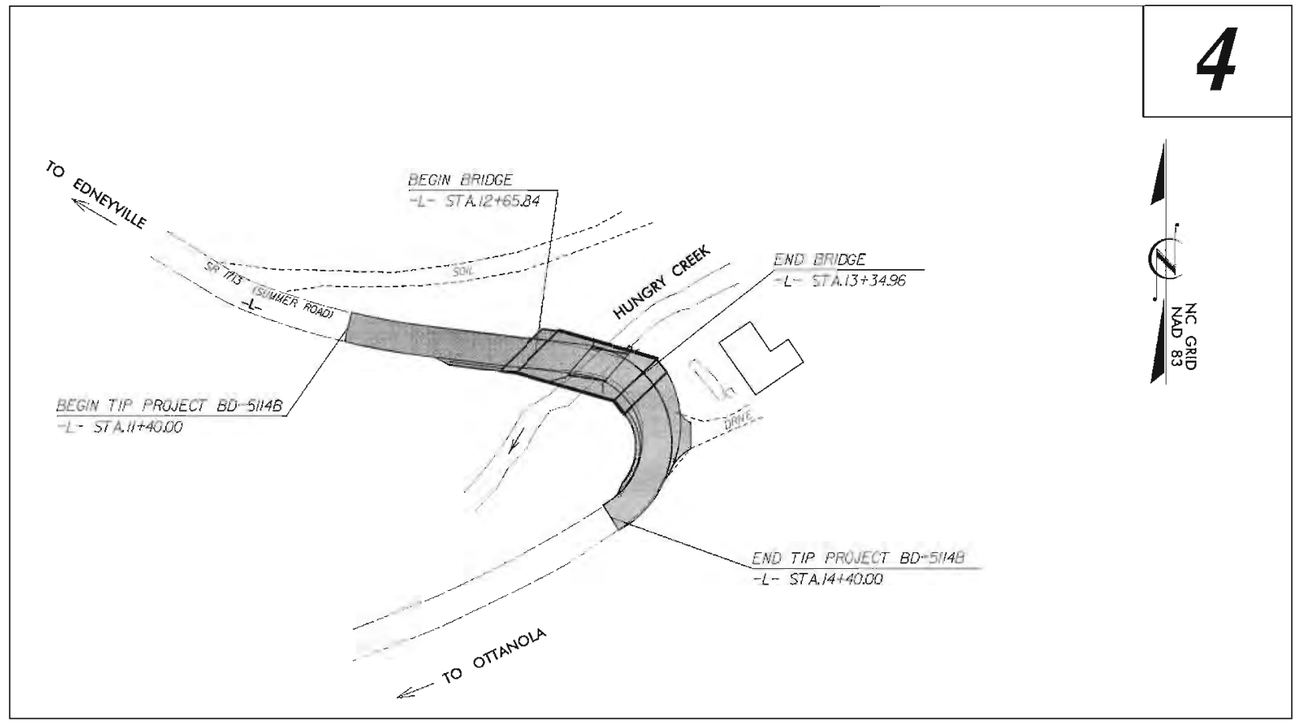

V&M
Vaughn & Melton
Consulting Engineers
Asheville, North Carolina
Charlotte, North Carolina
Tri-Cities, Tennessee
Knoxville, Tennessee
Middlesboro, Kentucky
Spartanburg, South Carolina

GRAPHIC SCALES

50 25 0 50 100
PLANS

50 25 0 20 40
PROFILE (HORIZONTAL)

10 5 0 4 8
PROFILE (VERTICAL)

DESIGN DATA

PROJECT LENGTH

LENGTH ROADWAY TIP PROJECT BD-5114B = 0.044 MI
LENGTH STRUCTURE TIP PROJECT BD-5114B = 0.013 MI
TOTAL LENGTH OF TIP PROJECT BD-5114B = 0.057 MI

Prepared in the Office of:
VAUGHN & MELTON
1318-F PATTON AVE.
ASHEVILLE NC, 28806
FOR THE NORTH CAROLINA DIVISION OF HIGHWAYS

2012 STANDARD SPECIFICATIONS

RIGHT OF WAY DATE:
OCTOBER 14, 2011

LETTING DATE:
JUNE 26, 2012

REECE SCHULER, PE
PROJECT ENGINEER

AARON CARVER, PE
PROJECT DESIGN ENGINEER

NCDOT CONTACT:
JOSH DEYTON, PE
DIVISION 14 BRIDGE MANAGEMENT ENGINEER

HYDRAULICS ENGINEER

NORTH CAROLINA PROFESSIONAL SEAL 18462 ENGINEER JAMES C. DAVIS

5/10/12

SIGNATURE: *P.E.*

ROADWAY DESIGN ENGINEER

NORTH CAROLINA PROFESSIONAL SEAL 26960 ENGINEER REECE M. SCHULER

5/8/12

SIGNATURE: *P.E.*

DIVISION OF HIGHWAYS STATE OF NORTH CAROLINA

STATE OF NORTH CAROLINA DEPARTMENT OF TRANSPORTATION

PROJECT REFERENCE NO.	SHEET NO.
BD-5140	1-A

ROADWAY DESIGN ENGINEER

NORTH CAROLINA PROFESSIONAL SEAL 29960 ENGINEER PEYTON W. SCHULER

INDEX OF SHEETS

SHEET NUMBER	SHEET
1	TITLE SHEET
1-A	INDEX OF SHEETS, GENERAL NOTES, AND LIST OF STANDARD DRAWINGS
1-B	CONVENTIONAL SYMBOLS
1-C	SURVEY CONTROL SHEET
2	PAVEMENT SCHEDULE, TYPICAL SECTIONS, AND WEDGING DETAILS
3	SUMMARY OF QUANTITIES
3A	SUMMARY OF DRAINAGE QUANTITIES, SUMMARY OF GUARDRAIL, AND ASPHALT PAVEMENT REMOVAL SUMMARY
3B	EARTHWORK SUMMARY
4	PLAN AND PROFILE SHEET
TCP-1 THRU TCP-4	TRAFFIC MANAGEMENT PLANS
EC-1 THRU EC-2	EROSION CONTROL PLANS
UO-1 THRU UO-2	UTILITIES BY OTHERS PLANS
X-0	CROSS-SECTION SUMMARY
X-1 THRU X-7	CROSS-SECTIONS
S-1 THRU S-10	STRUCTURE PLANS

GENERAL NOTES:

2012 SPECIFICATIONS
EFFECTIVE: 07-17-12
REVISED: 11-01-11

GRADE LINE:
GRADING AND SURFACING OR RESURFACING AND WIDENING:

THE GRADE LINES SHOWN DENOTE THE FINISHED ELEVATION OF THE PROPOSED SURFACING AT GRADE POINTS SHOWN ON THE TYPICAL SECTIONS. WHERE NO GRADE LINES ARE SHOWN, THE PROFILES SHOWN DENOTE THE TOP ELEVATION OF THE EXISTING PAVEMENT ALONG THE CENTER LINE OF SURVEY ON WHICH THE PROPOSED RESURFACING WILL BE PLACED. GRADE LINES MAY BE ADJUSTED BY THE ENGINEER IN ORDER TO SECURE A PROPER TIE-IN.

CLEARING:

CLEARING ON THIS PROJECT SHALL BE PERFORMED TO THE LIMITS ESTABLISHED BY METHOD II.

SUPERELEVATION:

ALL CURVES ON THIS PROJECT SHALL BE SUPERELEVATED IN ACCORDANCE WITH STD. NO. 225.04 USING THE RATE OF SUPERELEVATION AND RUNOFF SHOWN ON THE PLANS. SUPERELEVATION IS TO BE REVOLVED ABOUT THE GRADE POINTS SHOWN ON THE TYPICAL SECTIONS.

SHOULDER CONSTRUCTION:

ASPHALT, EARTH, AND CONCRETE SHOULDER CONSTRUCTION ON THE HIGH SIDE OF SUPERELEVATED CURVES SHALL BE IN ACCORDANCE WITH STD. NO. 560.01.

UNDERDRAINS:

UNDERDRAINS SHALL BE CONSTRUCTED IN ACCORDANCE WITH STD. NO. 815.03 AT LOCATIONS DIRECTED BY THE ENGINEER.

GUARDRAIL:

THE GUARDRAIL LOCATIONS SHOWN ON THE PLANS MAY BE ADJUSTED DURING CONSTRUCTION AS DIRECTED BY THE ENGINEER. THE CONTRACTOR SHOULD CONSULT WITH THE ENGINEER PRIOR TO ORDERING GUARDRAIL MATERIAL.

SUBSURFACE PLANS:

NO SUBSURFACE PLANS ARE AVAILABLE ON THIS PROJECT. THE CONTRACTOR SHOULD MAKE HIS OWN INVESTIGATION AS TO THE SUBSURFACE CONDITIONS.

END BENTS:

THE ENGINEER SHALL CHECK THE STRUCTURE END BENT PLANS, DETAILS, AND CROSS-SECTION PRIOR TO SETTING OF THE SLOPE STAKES FOR THE EMBANKMENT OR EXCAVATION APPROACHING A BRIDGE.

UTILITIES:

UTILITY OWNERS ON THIS PROJECT ARE: TELEPHONE - AT&T
POWER DISTRIBUTION - DUKE POWER

RIGHT-OF-WAY MARKERS:

ALL RIGHT-OF-WAY MARKERS ON THIS PROJECT SHALL BE PLACED BY OTHERS.

2006 ROADWAY ENGLISH STANDARD DRAWINGS

The following Roadway Standards as appear in "Roadway Standard Drawings" Highway Design Branch - N. C. Department of Transportation - Raleigh, N. C., Dated July 19, 2006 are applicable to this project and by reference hereto are considered a part of these plans:

STD.NO.	TITLE
DIVISION 2 - EARTHWORK	
200.02	Method of Clearing - Method II
225.02	Guide for Grading Subgrade - Secondary and Local
225.04	Method of Obtaining Superelevation - Two Lane Pavement
DIVISION 3 - PIPE CULVERTS	
300.01	Method of Pipe Installation - Method 'A'
DIVISION 4 - MAJOR STRUCTURES	
422.11	Bridge Approach Fills
DIVISION 5 - SUBGRADE, BASES AND SHOULDERS	
560.01	Method of Shoulder Construction - High Side of Superelevated Curve - Method I
DIVISION 8 - INCIDENTALS	
815.03	Pipe Underdrain and Blind Drain
840.25	Anchorage for Frames
840.37	Traffic Bearing Grated Drop Inlet - For Cast Iron Double Frame and Grates
840.46	Traffic Bearing Precast Drainage Structure
840.66	Drainage Structure Steps
846.01	Concrete Curb, Gutter and Curb & Gutter
846.04	Drop Inlet Installation In Shoulder Berm Gutter
862.01	Guardrail Placement
862.02	Guardrail Installation
862.03	Structure Anchor Units
876.02	Guide for Rip Rap at Pipe Outlets

PROJECT REFERENCE NO.	SHEET NO.
BD-5148	1-B

Note: Not to Scale

**S.U.E. = Subsurface Utility Engineering*

STATE OF NORTH CAROLINA
DIVISION OF HIGHWAYS

CONVENTIONAL PLAN SHEET SYMBOLS

BOUNDARIES AND PROPERTY:

- State Line
- County Line
- Township Line
- City Line
- Reservation Line
- Property Line
- Existing Iron Pin
- Property Corner
- Property Monument
- Parcel/Sequence Number
- Existing Fence Line
- Proposed Woven Wire Fence
- Proposed Chain Link Fence
- Proposed Barbed Wire Fence
- Existing Wetland Boundary
- Proposed Wetland Boundary
- Existing Endangered Animal Boundary
- Existing Endangered Plant Boundary

BUILDINGS AND OTHER CULTURE:

- Gas Pump Vent or U/G Tank Cap
- Sign
- Well
- Small Mine
- Foundation
- Area Outline
- Cemetery
- Building
- School
- Church
- Dam

HYDROLOGY:

- Stream or Body of Water
- Hydro, Pool or Reservoir
- Jurisdictional Stream
- Buffer Zone 1
- Buffer Zone 2
- Flow Arrow
- Disappearing Stream
- Spring
- Swamp Marsh
- Proposed Lateral, Tail, Head Ditch
- False Sump

RAILROADS:

- Standard Gauge
- RR Signal Milepost
- Switch
- RR Abandoned
- RR Dismantled

RIGHT OF WAY:

- Baseline Control Point
- Existing Right of Way Marker
- Existing Right of Way Line
- Proposed Right of Way Line
- Proposed Right of Way Line with Iron Pin and Cap Marker
- Proposed Right of Way Line with Concrete or Granite Marker
- Existing Control of Access
- Proposed Control of Access
- Existing Easement Line
- Proposed Temporary Construction Easement
- Proposed Temporary Drainage Easement
- Proposed Permanent Drainage Easement
- Proposed Permanent Utility Easement

ROADS AND RELATED FEATURES:

- Existing Edge of Pavement
- Existing Curb
- Proposed Slope Stakes Cut
- Proposed Slope Stakes Fill
- Proposed Wheel Chair Ramp
- Proposed Wheel Chair Ramp Curb Cut
- Curb Cut for Future Wheel Chair Ramp
- Existing Metal Guardrail
- Proposed Guardrail
- Existing Cable Guiderail
- Proposed Cable Guiderail
- Equality Symbol
- Pavement Removal

VEGETATION:

- Single Tree
- Single Shrub
- Hedge
- Woods Line
- Orchard
- Vineyard

EXISTING STRUCTURES:

MAJOR:

- Bridge, Tunnel or Box Culvert
- Bridge Wing Wall, Head Wall and End Wall

MINOR:

- Head and End Wall
- Pipe Culvert
- Footbridge
- Drainage Box: Catch Basin, DI or JB
- Paved Ditch Gutter
- Storm Sewer Manhole
- Storm Sewer

UTILITIES:

POWER:

- Existing Power Pole
- Proposed Power Pole
- Existing Joint Use Pole
- Proposed Joint Use Pole
- Power Manhole
- Power Line Tower
- Power Transformer
- U/G Power Cable Hand Hole
- H-Frame Pole
- Recorded U/G Power Line
- Designated U/G Power Line (S.U.E.*)

TELEPHONE:

- Existing Telephone Pole
- Proposed Telephone Pole
- Telephone Manhole
- Telephone Booth
- Telephone Pedestal
- Telephone Cell Tower
- U/G Telephone Cable Hand Hole
- Recorded U/G Telephone Cable
- Designated U/G Telephone Cable (S.U.E.*)
- Recorded U/G Telephone Conduit
- Designated U/G Telephone Conduit (S.U.E.*)
- Recorded U/G Fiber Optics Cable
- Designated U/G Fiber Optics Cable (S.U.E.*)

WATER:

- Water Manhole
- Water Meter
- Water Valve
- Water Hydrant
- Recorded U/G Water Line
- Designated U/G Water Line (S.U.E.*)
- Above Ground Water Line

TV:

- TV Satellite Dish
- TV Pedestal
- TV Tower
- U/G TV Cable Hand Hole
- Recorded U/G TV Cable
- Designated U/G TV Cable (S.U.E.*)
- Recorded U/G Fiber Optic Cable
- Designated U/G Fiber Optic Cable (S.U.E.*)

GAS:

- Gas Valve
- Gas Meter
- Recorded U/G Gas Line
- Designated U/G Gas Line (S.U.E.*)
- Above Ground Gas Line

SANITARY SEWER:

- Sanitary Sewer Manhole
- Sanitary Sewer Cleanout
- U/G Sanitary Sewer Line
- Above Ground Sanitary Sewer
- Recorded SS Forced Main Line
- Designated SS Forced Main Line (S.U.E.*)

MISCELLANEOUS:

- Utility Pole
- Utility Pole with Base
- Utility Located Object
- Utility Traffic Signal Box
- Utility Unknown U/G Line
- U/G Tank; Water, Gas, Oil
- A/G Tank; Water, Gas, Oil
- U/G Test Hole (S.U.E.*)
- Abandoned According to Utility Records — AATUR
- End of Information — E.O.I.

PROJECT REFERENCE NO.	SHEET NO.
45360.1.2	1C
Location and Surveys	

SURVEY CONTROL SHEET BD-5114B

BL

POINT	DESC.	NORTH	EAST	ELEVATION	L STATION	OFFSET
1	BL-1	606349.8250	1020491.0140	2509.11	15+69.63	13.60 RT
2	BL-2	606493.6780	1020575.9990	2492.88	12+83.63	11.60 RT
3	BL-3	606541.2590	1020347.6880	2506.09	10+53.76	15.43 RT

BM1 ELEVATION = 2492.88
N 606494 E 1020576
BL STATION 6+67.00 0 RIGHT
30 INCH REBAR WITH CAP

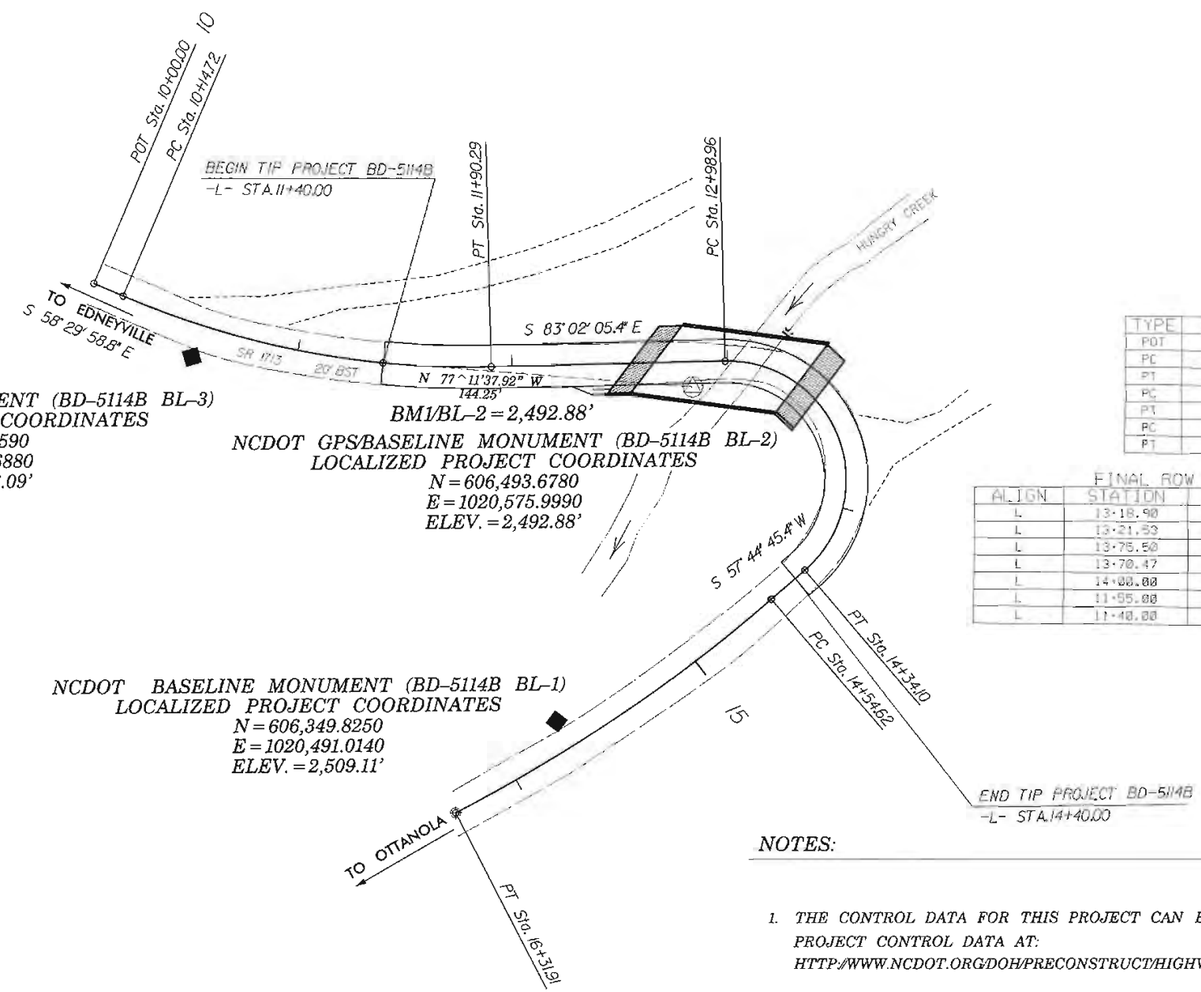

NC GRID
NAD 83/NSRS 2007

FINAL -L-

TYPE	STATION	NORTH	EAST
POT	10+00.00	606591.5983	1020307.6994
PC	10+14.72	606573.9025	1020320.2544
PT	11+90.29	606516.5095	1020484.7619
PC	12+98.96	606503.3320	1020592.6260
PT	14+34.10	606402.2245	1020615.3085
PC	14+54.62	606391.2722	1020597.9522
PT	16+31.91	606314.6776	1020438.5028

FINAL ROW MARKER IRON PIN AND CAP-E

ALIGN	STATION	OFFSET	NORTH	EAST
L	13+18.90	-26.07	606520.4928	1020623.6868
L	13+21.59	-35.00	606526.3035	1020631.6026
L	13+75.50	-35.00	606453.9202	1020678.8071
L	13+70.47	-25.56	606460.7024	1020665.6230
L	14+00.00	25.00	606437.3922	1020613.7282
L	11+55.00	30.00	606492.9358	1020443.7700
L	11+40.00	28.65	606500.7627	1020429.1343

DATUM DESCRIPTION

THE LOCALIZED COORDINATE SYSTEM DEVELOPED FOR THIS PROJECT IS BASED ON THE STATE PLANE COORDINATES ESTABLISHED BY NCDOT FOR MONUMENT "440128 BL-2"
WITH NAD 83/NSRS 2007 STATE PLANE GRID COORDINATES OF
NORTHING: 606493.678(ft) EASTING: 1020575.999(ft)
ELEVATION: 2492.88(ft)
THE AVERAGE COMBINED GRID FACTOR USED ON THIS PROJECT (GROUND TO GRID) IS: 0.999760057
THE N.C. LAMBERT GRID BEARING AND LOCALIZED HORIZONTAL GROUND DISTANCE FROM "440128/BD5114B BL-2" TO -L- STATION 10+40.00 IS
N 77° 11' 37.92" W 144.25'
ALL LINEAR DIMENSIONS ARE LOCALIZED HORIZONTAL DISTANCES
VERTICAL DATUM USED IS NAVD 88

GEOIDAL MODEL — G09NC
NOTE: DRAWING NOT TO SCALE

NOTES:

1. THE CONTROL DATA FOR THIS PROJECT CAN BE FOUND ELECTRONICALLY BY SELECTING PROJECT CONTROL DATA AT:
HTTP://WWW.NCDOT.ORG/DOH/PRECONSTRUCT/HIGHWAY/LOCATION/PROJECT/

THE FILES TO BE FOUND ARE AS FOLLOWS:
BD-5114B_LS_CONTROL.TXT

SITE CALIBRATION INFORMATION HAS NOT BEEN PROVIDED FOR THIS PROJECT. IF FURTHER INFORMATION IS NEEDED, PLEASE CONTACT THE LOCATION AND SURVEYS UNIT.

△ INDICATES GEODETIC CONTROL MONUMENTS USED OR SET FOR HORIZONTAL PROJECT CONTROL BY THE NCDOT LOCATION AND SURVEYS UNIT.
PROJECT CONTROL ESTABLISHED USING GLOBAL POSITIONING SYSTEM.

6/2/99

PROJECT REFERENCE NO.	SHEET NO.
BD-5114B	2
R/W SHEET NO.	
ROADWAY DESIGN ENGINEER	PAVEMENT DESIGN ENGINEER

NORTH CAROLINA PROFESSIONAL SEAL 26980 ENGINEER REECE M. SCHULER 5/8/12

USE TYPICAL SECTION NO. 1

-L- STA. 11+40.00 TO 12+65.84 (BEGIN BRIDGE)
-L- STA. 13+34.96 (END BRIDGE) TO 14+40.00

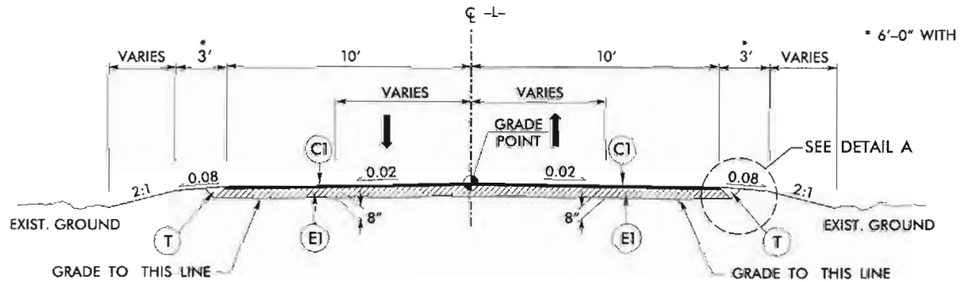

* 6'-0" WITH GUARDRAIL

TYPICAL SECTION NO. 1

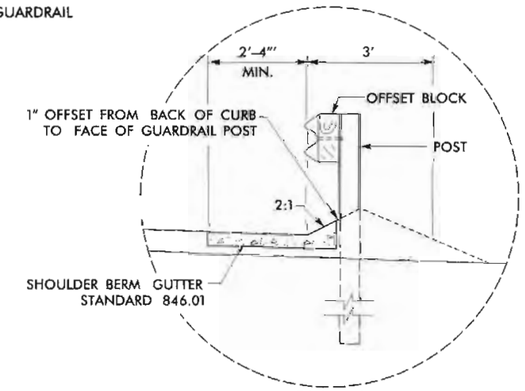

DETAIL A

SBG 12+10 -L- TO BEGIN APPR. SLAB RT
SBG END APPR. SLAB TO 14+16 RT

USE TYPICAL SECTION NO. 2

-L- STA. 12+65.84 (BEGIN BRIDGE) TO
-L- STA. 13+34.96 (END BRIDGE)

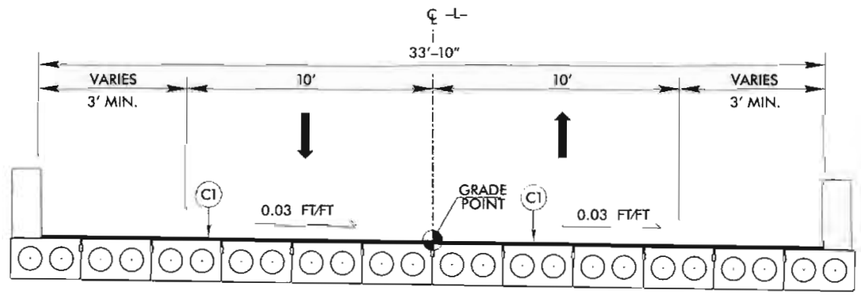

TYPICAL SECTION NO. 2

	PAVEMENT SCHEDULE
C1	PROP. APPROX. 3" ASPHALT CONCRETE SURFACE COURSE, TYPE S9.5B, AT AN AVERAGE RATE OF 168 LBS. PER SQ. YD. IN EACH OF TWO LAYERS.
E1	PROP. APPROX. 5" ASPHALT CONCRETE BASE COURSE, TYPE B25.0B, AT AN AVERAGE RATE OF 570 LBS. PER SQ. YD.
T	EARTH MATERIAL

NOTE: ALL PAVEMENT SLOPES ARE 1:1 UNLESS SHOWN OTHERWISE.

PROJECT REFERENCE NO.	SHEET NO.
BD-5114B	3

STATE OF NORTH CAROLINA
DIVISION OF HIGHWAYS

SUMMARY OF QUANTITIES

COMPUTED BY: WCC DATE: 10-04-11
CHECKED BY: ACC DATE: 10-04-11

STATE OF NORTH CAROLINA
DIVISION OF HIGHWAYS

PROJECT REFERENCE NO.	SHEET NO.
BD-5114B	3-A

RIGHT OF WAY AREA DATA

PARCEL NO.	PROPERTY OWNERS NAMES	TOTAL ACREAGE	AREA TAKEN (sf)	AREA REMAINING RT. (Acre)	AREA REMAINING LT. (Acre)	CONST. EASE. (sf)	PERM. DRAIN. EASE. (sf)	TEMP. DRAIN. EASE. (sf)
1	DAVID GORANSON	1.53						
2	EDWARD BORSODY	30.32	2241	30.269		1219		
3	CASSIE STEPP	7.41	1368	7.379				
4	ALBERT GUFFANTI	24.23						
5	PETER STEVES	5.70	751		5.683	931		

PAVEMENT REMOVAL SUMMARY

LINE	LOCATION	ASPHALT REMOVAL (IN SQUARE YARDS)	ASPHALT BREAK-UP	CONCRETE REMOVAL	CONCRETE REMOVAL
-L-	11+40 TO 12+97	350			
-L-	13+20 TO 14+40	270			
	TOTAL	620			

Approximate quantities only. Unclassified excavation, borrow excavation, fine grading, clearing and grubbing, and removal of existing pavement will be paid for at the contract lump sum price for "grading".

NOTE: Invert Elevations are for Bid Purposes only and shall not be used for project construction stakeout. See "Standard Specifications For Roads and Structures, Section 300-5".

SUB-REGIONAL & REGIONAL LIST OF PIPES, ENDWALLS, ETC. (FOR PIPES 48" & UNDER)

STATION	LOCATION (LT,RT, OR CL)	STRUCTURE NO. FROM	STRUCTURE NO. TO	TOP ELEVATION	INVERT ELEVATION	INVERT ELEVATION	SLOPE CRITICAL	DRAINAGE PIPE (RCP, CSP, CAAP, HDPE, or PVC) 15"	ENDWALLS STD. 838.01, STD. 838.11 OR STD. 838.80 (UNLESS NOTED OTHERWISE) CU. YDS. R.C.P.	C.S.P.	QUANTITIES FOR DRAINAGE STRUCTURES PER EACH (0' THRU 5.0')	5.0' THRU 10.0'	10.0' AND ABOVE	C.B. STD. 840.01 OR STD. 840.02	FRAME, GRATES AND HOOD STANDARD 840.03	CATCH BASIN	DROP INLET	T.B.D.I. STD. 840.36	T.B.D.I. FRAME WITH TWO GRATES STD. 840.37	CORR. STEEL ELBOWS NO. & SIZE	CONC. COLLARS CL "B" C.Y. STD 840.72	CONC. & BRICK PIPE PLUG, C.Y. STD. 840.71	PIPE REMOVAL LIN.FT.	REMARKS
-L- 12+47.45	LT	1		2496.49'	2494.57'						1						1	1	1					
		1	2		2494.57'	2493.82'		28																
-L- 12+43.90	RT	2		2496.57'	2493.82'						1						1	1	1					
		2	3		2493.82'	2490.50'		20																
-L- 13+54.19	RT	4		2494.79'	2492.87'						1						1	1	1					
		4	5		2492.87'	2492.24'		12																
TOTAL								60			3						3	3	3					

Other column headings: DRAINAGE PIPE 12", 18", 24", 30", 36", 42", 48"; DO NOT USE RCP; DO NOT USE CSP; DO NOT USE CAAP; DO NOT USE HDPE; C.S. PIPE 12" (.064), 15" (.064), 18" (.064), 24" (.064), 36" (.079), 42" (.109), 48" (.109); R.C. PIPE (CLASS III) 15"–48"; R.C. PIPE (CLASS IV) 12"–48"; **" R. C. PIPE (CLASS V); *** R. C. PIPE CULVERTS, CONTRACTOR DESIGN PIPE; *** R. C. PIPE CULVERTS, CONTRACTOR DESIGN PIPE; 15" SIDE DRAIN PIPE; 18" SIDE DRAIN PIPE; LIN. FT. A, B (* TOTAL L.F. FOR PAY QUANTITY SHALL BE COL. 'A' + (1.3 X COL.'B')); TYPE OF GRATE E, F, G; CONCRETE TRANSITIONAL SECTION.

ABBREVIATIONS

- C.B. CATCH BASIN
- N.D.I. NARROW DROP INLET
- D.I. DROP INLET
- G.D.I. GRATED DROP INLET
- G.D.I. (N.S.) GRATED DROP INLET (NARROW SLOT)
- J.B. JUNCTION BOX
- M.H. MANHOLE
- T.B.D.I. TRAFFIC BEARING DROP INLET
- T.B.J.B. TRAFFIC BEARING JUNCTION BOX

"N" = DISTANCE FROM EDGE OF LANE TO FACE OF GUARDRAIL.
TOTAL SHOULDER WIDTH = DISTANCE FROM EDGE OF TRAVEL LANE TO SHOULDER BREAK POINT.
FLARE LENGTH = DISTANCE FROM LAST SECTION OF PARALLEL GUARDRAIL TO END OF GUARDRAIL.
W = TOTAL WIDTH OF FLARE FROM BEGINNING OF TAPER TO END OF GUARDRAIL.
G = GATING IMPACT ATTENUATOR TYPE 350
NG = NON-GATING IMPACT ATTENUATOR TYPE 350

GUARDRAIL SUMMARY

SURVEY LINE	BEG. STA.	END STA.	LOCATION	LENGTH STRAIGHT	LENGTH SHOP CURVED	LENGTH DOUBLE FACED	WARRANT POINT APPROACH END	WARRANT POINT TRAILING END	"N" DIST. FROM E.O.L.	TOTAL SHOUL. WIDTH	FLARE LENGTH APPROACH END	FLARE LENGTH TRAILING END	W APPROACH END	W TRAILING END	ANCHORS XI MOD	XI	GRAU 350	GRAU 350 TL-2		TYPE III	TYPE III SHOP CURVED	B-77	AT-1	IMPACT ATTENUATOR TYPE 350 EA	G	NG	SINGLE FACED GUARDRAIL	REMOVE EXISTING GUARDRAIL	REMOVE AND STOCKPILE EXISTING GUARDRAIL	REMARKS
-L-	11+41.28	12+44.52	RT	106.25				12+44.52	3.75	6.75							1			1										
-L-	12+61.21	12+79.74	LT	25			12+79.74		8	11		50		1.25						1										
-L-	13+35.23	13+66.38	LT	25	18.75			13+35.23	16	19								1			1		1							
-L-	13+51.31	14+15.55	RT	25	18.75		13+51.31		2.25	6								1			1									
			SUBTOTAL	181.25	37.5												1	2		2	2		1							
			LESS DEDUCTIONS FOR ANCHORS																											
			AT-1 1 @ 6.25'	-6.25'																										
			GRAU-350 1 @ 50'=	-50																										
			GRAU-350 TL-2 2 @ 25'=	-50																										
			TYPE III 2 @ 18.75'=	-37.5																										
			TYPE III 2 @ 18.75'=		-37.5																									
			PROJECT TOTALS:	37.5																										
			SAY:	50																										
			ADDITIONAL GUARDRAIL POSTS=5 EA.																											

6/21/00

COMPUTED BY: WGC	DATE: 10-04-11
CHECKED BY: ACC	DATE: 10-04-11

PROJECT REFERENCE NO.	SHEET NO.
BD-5115	3-B

DIVISION OF HIGHWAYS
STATE OF NORTH CAROLINA

SUMMARY OF EARTHWORK

IN CUBIC YARDS

LOCATION	UNCLASSIFIED EXCAVATION	UNDERCUT	EMBT + %	BORROW	WASTE
SUMMARY NO.1					
-L- STA. 11+40 TO STA. 12+65.84 (BEG. BRIDGE)	46		189	143	
SUBTOTAL SUMMARY NO.1	46		189	143	
SUMMARY NO.2					
-L- STA. 13+34.96 (END BRIDGE) TO STA. 14+40	8		247	239	
SUBTOTAL SUMMARY NO.2	8		247	239	
PROJECT SUBTOTAL	54		436	382	
EST. 5% FOR REPLACING TOP SOIL ON BORROW PITS				19	
GRAND TOTAL	54		436	401	
SAY	60			450	

CONTINGENCY ITEMS:

INCIDENTAL STONE = 40 TONS

UNDERCUT EXCAVATION = 50 CY

SELECT GRANULAR MATERIAL = 50 CY

CLASS IV SUBGRADE STABILIZATION = 50 TONS

FABRIC FOR SOIL STABILIZATION = 50 SY

Approximate quantities only. Unclassified excavation, borrow excavation, fine grading, clearing and grubbing, and removal of existing pavement will be paid for at the contract lump sum price for "grading".

PROJECT REFERENCE NO.	SHEET NO.
BD-5114B	4
R/W SHEET NO.	
ROADWAY DESIGN ENGINEER	HYDRAULICS ENGINEER

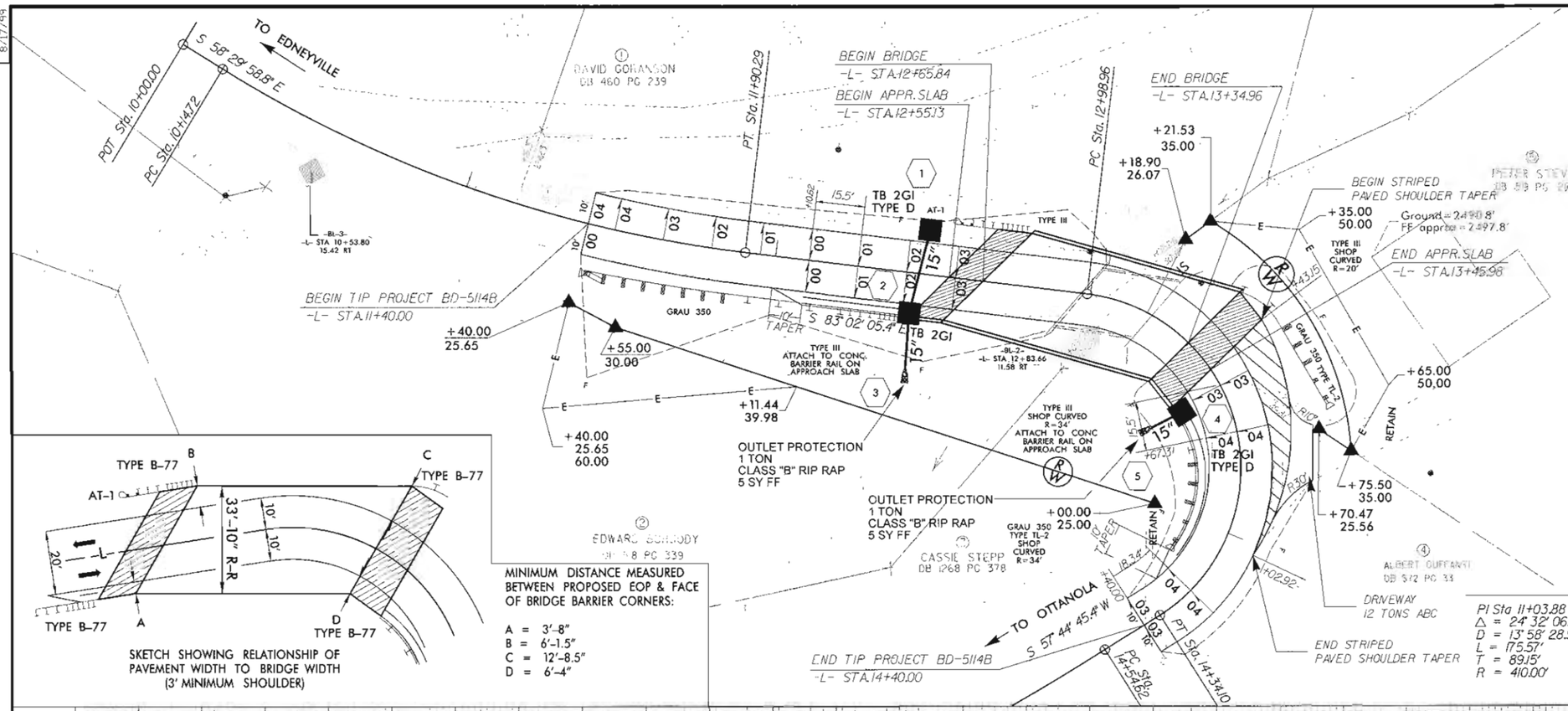

SBG -L- STA. 12+10 TO BEG APPR. SLAB RT
SBG END APPR. SLAB RT TO -L- STA. 14+16

SEE SHEETS S-1 THRU S-16
FOR STRUCTURE PLANS

SKETCH SHOWING RELATIONSHIP OF PAVEMENT WIDTH TO BRIDGE WIDTH (3' MINIMUM SHOULDER)

MINIMUM DISTANCE MEASURED BETWEEN PROPOSED EOP & FACE OF BRIDGE BARRIER CORNERS:

A = 3'-8"
B = 6'-1.5"
C = 12'-8.5"
D = 6'-4"

-L- CURVE DATA

PI Sta 11+03.88	PI Sta 14+53.34	PI Sta 15+43.66
Δ = 24° 32' 06.6" (LT)	Δ = 140° 46' 50.9" (RT)	Δ = 13° 11' 30.1" (RT)
D = 13° 58' 28.5"	D = 104° 10' 26.9"	D = 7° 26' 27.6"
L = 175.57'	L = 135.14'	L = 177.28'
T = 89.15'	T = 154.38'	T = 89.04'
R = 410.00'	*R = 55.00'	R = 770.00'
	SE = 0.04	
	RO = 62	* V = 15 MPH

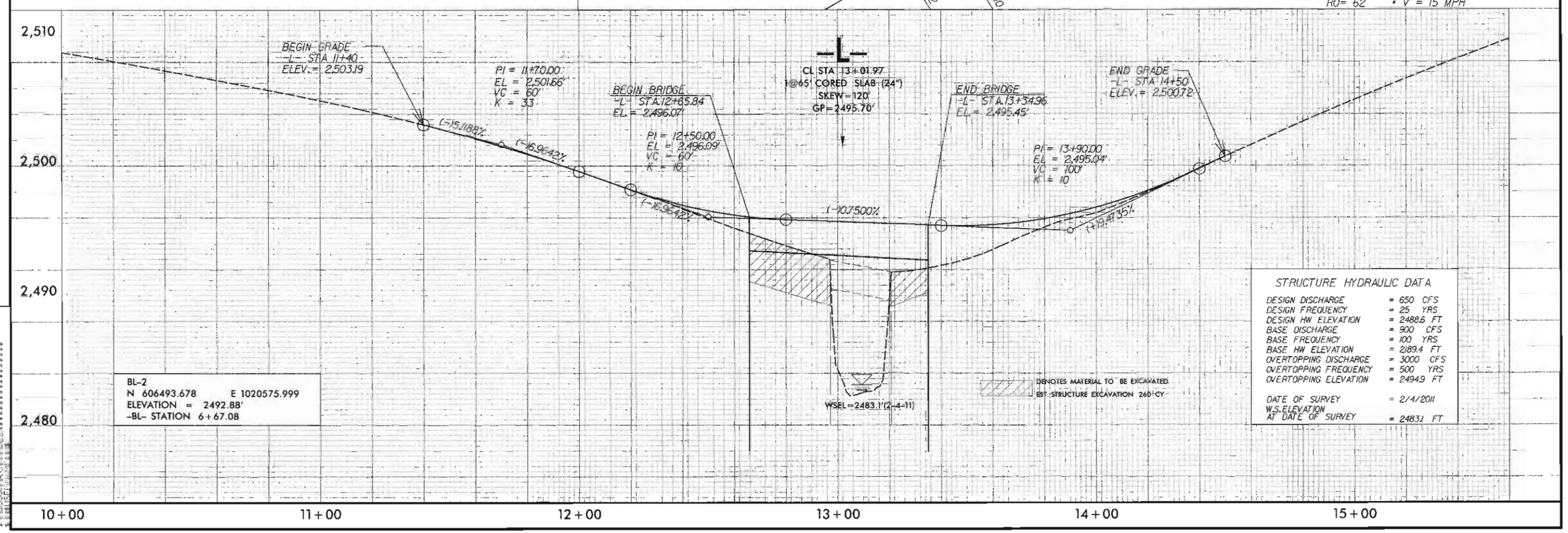

BL-2
N 606493.678 E 1020575.999
ELEVATION = 2492.88'
-BL- STATION 6+67.08

DENOTES MATERIAL TO BE EXCAVATED
EST. STRUCTURE EXCAVATION 260 CY

STRUCTURE HYDRAULIC DATA

DESIGN DISCHARGE	= 650 CFS
DESIGN FREQUENCY	= 25 YRS
DESIGN HW ELEVATION	= 2488.6 FT
BASE DISCHARGE	= 900 CFS
BASE FREQUENCY	= 100 YRS
BASE HW ELEVATION	= 2189.4 FT
OVERTOPPING DISCHARGE	= 3000 CFS
OVERTOPPING FREQUENCY	= 500 YRS
OVERTOPPING ELEVATION	= 2494.9 FT
DATE OF SURVEY	= 2/4/2011
W.S. ELEVATION AT DATE OF SURVEY	= 2483.1 FT

REVISIONS

8/17/99

TIP PROJECT: BD-5114B

CONTRACT:

STATE OF NORTH CAROLINA
DIVISION OF HIGHWAYS

PLAN FOR PROPOSED TRAFFIC CONTROL

BRIDGE 128 – HENDERSON COUNTY

STATE PROJECT REFERENCE NO.	SHEET NO.
BD-5114B	TCP-1

V&M Vaughn & Melton Consulting Engineers
Asheville, North Carolina
Charlotte, North Carolina
Tri-Cities, Tennessee
Knoxville, Tennessee
Middlesboro, Kentucky
Spartanburg, South Carolina

STV / Ralph Whitehead Associates, Inc.
1000 West Morehead St., Ste. 200
Charlotte, NC 28208
NC License Number F-0991

ROADWAY STANDARD DRAWINGS

THE FOLLOWING ROADWAY STANDARDS AS APPEAR IN "ROADWAY STANDARD DRAWINGS" - PROJECT SERVICES UNIT - N.C. DEPARTMENT OF TRANSPORTATION - RALEIGH, N.C., DATED JANUARY 2012 ARE APPLICABLE TO THIS PROJECT AND BY REFERENCE HEREBY ARE CONSIDERED A PART OF THESE PLANS:

STD. NO.	TITLE
1101.03	TEMPORARY ROAD CLOSURES
1101.11	TRAFFIC CONTROL DESIGN TABLES
1110.01	STATIONARY WORK ZONE SIGNS
1145.01	BARRICADES

INDEX OF SHEETS

SHEET NO.	TITLE
TCP-1	LIST OF APPLICABLE ROADWAY STANDARD DRAWINGS, LEGEND, INDEX OF SHEETS
TCP-2	PROJECT NOTES AND PHASING
TCP-3	OFFSITE DETOUR SIGNING AND ROAD CLOSURE SIGNING
TCP-4	SPECIAL SIGN DESIGN

LEGEND

GENERAL

- DIRECTION OF TRAFFIC FLOW
- NORTH ARROW
- PROPOSED PVMT. ---------- EXIST. PVMT.
- WORK AREA

TRAFFIC CONTROL DEVICES

- TYPE I BARRICADE
- TYPE II BARRICADE
- TYPE III BARRICADE
- CONE
- DRUM
- SKINNY DRUM
- FLASHING ARROW PANEL (TYPE C)
- STATIONARY SIGN
- PORTABLE SIGN
- STATIONARY OR PORTABLE SIGN
- CRASH CUSHION
- CHANGEABLE MESSAGE SIGN
- TRUCK MOUNTED IMPACT ATTENUATOR (TMIA)
- POLICE
- FLAGGER

PAVEMENT MARKINGS

- CRYSTAL/CRYSTAL PAVEMENT MARKER
- YELLOW/YELLOW PAVEMENT MARKER
- CRYSTAL/RED PAVEMENT MARKER
- PAVEMENT MARKING SYMBOLS

APPROVED: [signature]
DATE: 4/17/12

NORTH CAROLINA PROFESSIONAL SEAL 021655 ENGINEER KIT A. PERSIANI

PLAN PREPARED FOR N.C.D.O.T. BY:
STV/RALPH WHITEHEAD ASSOCIATES

KIT A. PERSIANI, PE	PROJECT ENGINEER
CHRIS S. PARKER	DESIGN ENGINEER
CHRIS S. PARKER	DESIGN TECHNICIAN

4/17/2012
R:\Traffic\TrafficControl\TCP\BD5114B_TC_tcpl.dgn
parkercs

PROJ. REFERENCE NO.	SHEET NO.
BD-5114B	TCP-2

V&M
Vaughn & Melton
Consulting Engineers
Charlotte, North Carolina
Tri-Cities, Tennessee
Knoxville, Tennessee
Middlesboro, Kentucky
Spartanburg, South Carolina
Asheville, North Carolina
Copyright© 1991 Vaughn & Melton, Inc.
All Rights Reserved

STV/Ralph Whitehead Associates, Inc.
1000 West Morehead St., Ste 200
Charlotte, NC 28208
NC License Number F-0991

GENERAL NOTES

CHANGES MAY BE REQUIRED WHEN PHYSICAL DIMENSIONS IN THE DETAIL DRAWINGS, STANDARD DETAILS AND ROADWAY DETAILS ARE NOT ATTAINABLE TO MEET FIELD CONDITIONS OR RESULT IN DUPLICATE OR UNDESIRED OVERLAPPING OF DEVICES. MODIFICATION MAY INCLUDE: MOVING, SUPPLEMENTING, COVERING, OR REMOVAL OF DEVICES AS DIRECTED BY THE ENGINEER.

THE FOLLOWING GENERAL NOTES APPLY AT ALL TIMES FOR THE DURATION OF THE CONSTRUCTION PROJECT EXCEPT WHEN OTHERWISE NOTED IN THE PLAN OR DIRECTED BY THE ENGINEER.

TRAFFIC PATTERN ALTERATIONS

A) NOTIFY THE ENGINEER TWENTY ONE (21) CALENDAR DAYS PRIOR TO ANY TRAFFIC PATTERN ALTERATION.

SIGNING

B) PROVIDE SIGNING AND DEVICES REQUIRED TO CLOSE THE ROAD ACCORDING TO THE ROADWAY STANDARD DRAWINGS AND TRAFFIC CONTROL PLANS. PROVIDE SIGNING REQUIRED FOR THE OFF-SITE DETOUR ROUTE AS SHOWN IN THE TRAFFIC CONTROL PLANS.

C) COVER OR REMOVE ALL SIGNS AND DEVICES REQUIRED TO CLOSE THE ROAD WHEN ROAD CLOSURE IS NOT IN OPERATION. COVER OR REMOVE ALL SIGNS REQUIRED FOR THE OFF-SITE DETOUR WHEN THE DETOUR IS NOT IN OPERATION.

D) ENSURE ALL NECESSARY SIGNING IS IN PLACE PRIOR TO ALTERING ANY TRAFFIC PATTERN.

TRAFFIC CONTROL DEVICES

E) PLACE TYPE III BARRICADES, WITH "ROAD CLOSED" SIGN R11-2 ATTACHED, OF SUFFICIENT LENGTH TO CLOSE ENTIRE ROADWAY.

PHASING NOTES

STEP 1: USING RSD1101.03 SHEET 1 OF 9, AND TCP-3, INSTALL DETOUR SIGNS AND PLACE TYPE III BARRICADES TO CLOSE SR 1713 (SUMMER RD.) TO THRU TRAFFIC AND DETOUR ONTO PROPOSED DETOUR.

STEP 2: AWAY FROM TRAFFIC, PERFORM THE FOLLOWING:

REMOVE EXISTING STRUCTURE 128 AND CONSTRUCT PROPOSED STRUCTURE FROM -L- STATION 12+69.12 TO -L- STATION 13+34.82. SEE ROADWAY AND STRUCTURE PLANS.

CONSTRUCT PROPOSED -L- UP TO AND INCLUDING FINAL LAYER OF SURFACE COURSE.

PLACE FINAL PAVEMENT MARKINGS FROM -L- STATION 12+00 +/- TO -L- STATION 14+40 +/-, AND TIE TO EXISTING MARKINGS.

STEP 3: REMOVE ALL TRAFFIC CONTROL DEVICES, SIGNING AND DETOUR ROUTE SIGNING.

OPEN SR 1713 TO FINAL TRAFFIC PATTERN.

APPROVED: [signature] DATE: 4/17/12

NORTH CAROLINA PROFESSIONAL SEAL 021655 ENGINEER R. A. PERGIANI

PROJECT NOTES AND PHASING

SCALE:	NONE
DATE:	4/16/12
DWG. BY:	CSP
DESIGN BY:	CSP
REVIEWED BY:	KAP

REVISIONS

CADD FILE

PROJ. REFERENCE NO.	SHEET NO.
BD-5114B	TCP-3

V&M Vaughn & Melton Consulting Engineers
Asheville, North Carolina
Charlotte, North Carolina
Tri-Cities, Tennessee
Knoxville, Tennessee
Middlesboro, Kentucky
Spartanburg, South Carolina

STV/ Ralph Whitehead Associates, Inc.
1000 West Morehead St., Ste. 230
Charlotte, NC 28208
NC License Number F-0891

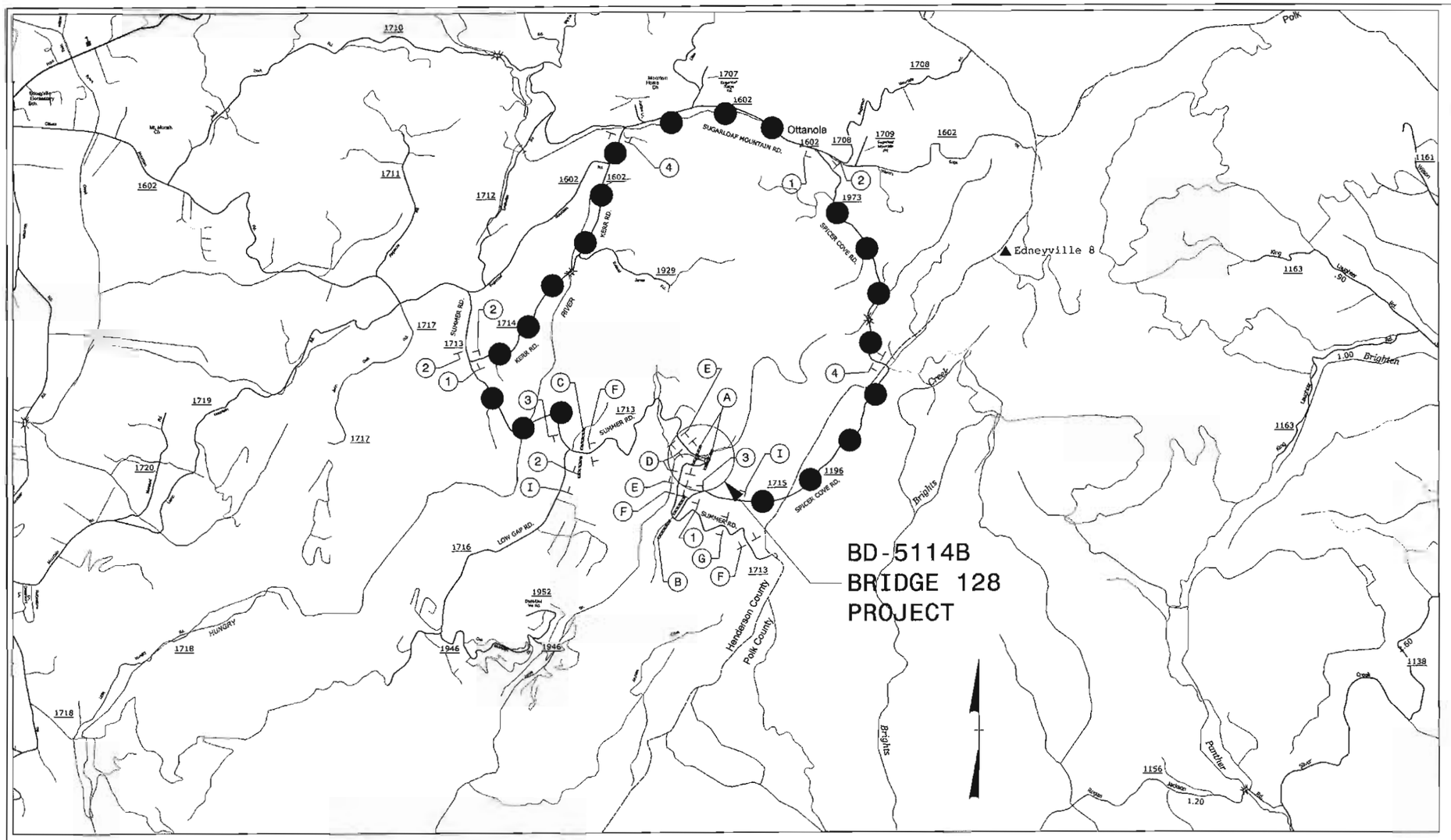

DETOUR ROUTE

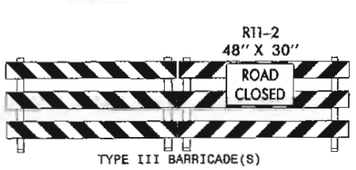

A

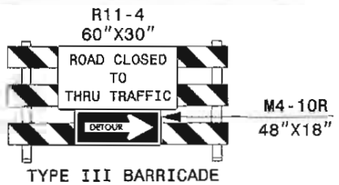

B

C

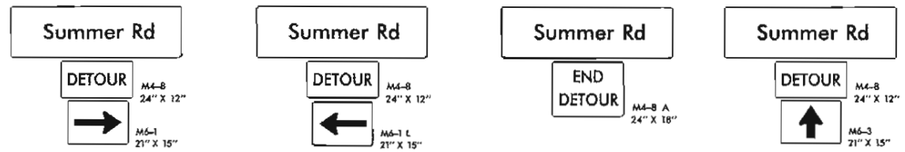

1 2 3 4

D

E

F

G

NEXT LEFT SP-4L 42" X 12"

H

NEXT RIGHT SP-4R 42" X 12"

I

NOTES:

TRAFFIC CONTROL DEVICES (A) THRU (I) SHALL BE INSTALLED ACCORDING TO ROADWAY STANDARD DRAWING 1101.03, SHEET 1 OF 9.

TRAFFIC CONTROL DEVICES (1) THRU (4) SHALL BE INSTALLED AS PER ENGINEER'S INSTRUCTION.

APPROVED: KAP DATE: 4/17/12

NORTH CAROLINA PROFESSIONAL SEAL 021655 ENGINEER KITH A. PERSIANI

OFFSITE DETOUR SIGNING AND ROAD CLOSURE SIGNING

SCALE:	NONE
DATE:	4/16/12
DWG. BY:	CSP
DESIGN BY:	CSP
REVIEWED BY:	KAP

REVISIONS

CADD FILE

PROJ. REFERENCE NO.	SHEET NO.
BD-5114B	TCP-4

V&M Vaughn & Melton Consulting Engineers
Charlotte, North Carolina
Tri-Cities, Tennessee
Knoxville, Tennessee
Middlesboro, Kentucky
Spartanburg, South Carolina
Asheville, North Carolina

STV / Ralph Whitehead Associates, Inc.
1000 West Morehead St., Ste. 200
Charlotte, NC 28208
NC License Number F-0191

SIGN NUMBER:
TYPE: STATIONARY
QUANTITY: SEE PLANS

BACKG COLOR: Fluorescent Orange
COPY COLOR: Black

SYMBOL	X	Y	WID	HT

SIGN WIDTH: 3'-8"
HEIGHT: 1'-0"
TOTAL AREA: 3.6 Sq.Ft.

BORDER TYPE: INSET
RECESS: 0.5"
WIDTH: 0.5"
RADII: 3"

NO. Z BARS:
LENGTH:

MAT'L: 0.080" (2.0 mm) ALUMINUM
0.079" (2.0 mm) COMPOSITE

USE NOTES: 1,2

1. Legend and border shall be direct applied non-reflective sheeting.
2. Background shall be Type VII, VIII, or IX (prismatic) fluorescent orange retroreflective sheeting.

DESIGN BY: KXT
PROJECT ID: BD-5114B
CHECKED BY: KAP
DIV: 14
DATE: Jul 7, 2011

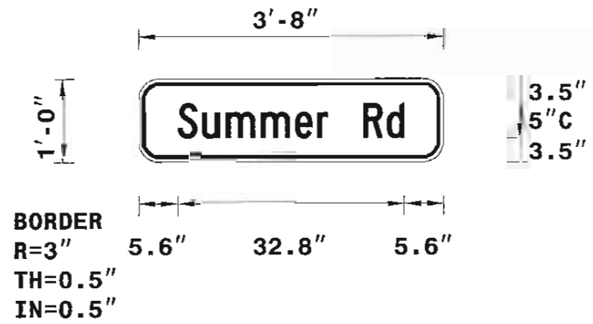

Spacing Factor is 1 unless specified otherwise

LETTER POSITIONS

Letter spacings are to start of next letter

																												Series/Size Text Length
		S	u	m	m	e	r		R	d																		C 2000
	5.6	3.5	3.4	5.1	4.9	3.2	1.6	5	3.4	2.6	5.6																	32.8

FILENAME:

NORTH CAROLINA D.O.T. SIGN DETAIL

APPROVED: [signature] DATE: 4/17/12

NORTH CAROLINA PROFESSIONAL SEAL 021855 ENGINEER KIT A. PERSIANI

SPECIAL SIGN DESIGN

SCALE:	NONE
DATE:	4/16/12
DWG. BY:	CSP
DESIGN BY:	CSP
REVIEWED BY:	KAP

REVISIONS

PROJECT REFERENCE NO	SHEET NO.
BD-5114B	EC-1
R/W SHEET NO.	
ROADWAY DESIGN ENGINEER	HYDRAULICS ENGINEER

THESE EROSION AND SEDIMENT CONTROL PLANS COMPLY WITH THE REGULATIONS SET FORTH BY THE NCG-010000 GENERAL CONSTRUCTION PERMIT EFFECTIVE AUGUST 3, 2011 ISSUED BY THE NORTH CAROLINA DEPARTMENT OF ENVIRONMENT AND NATURAL RESOURCES DIVISION OF WATER QUALITY.

EROSION CONTROL PLAN

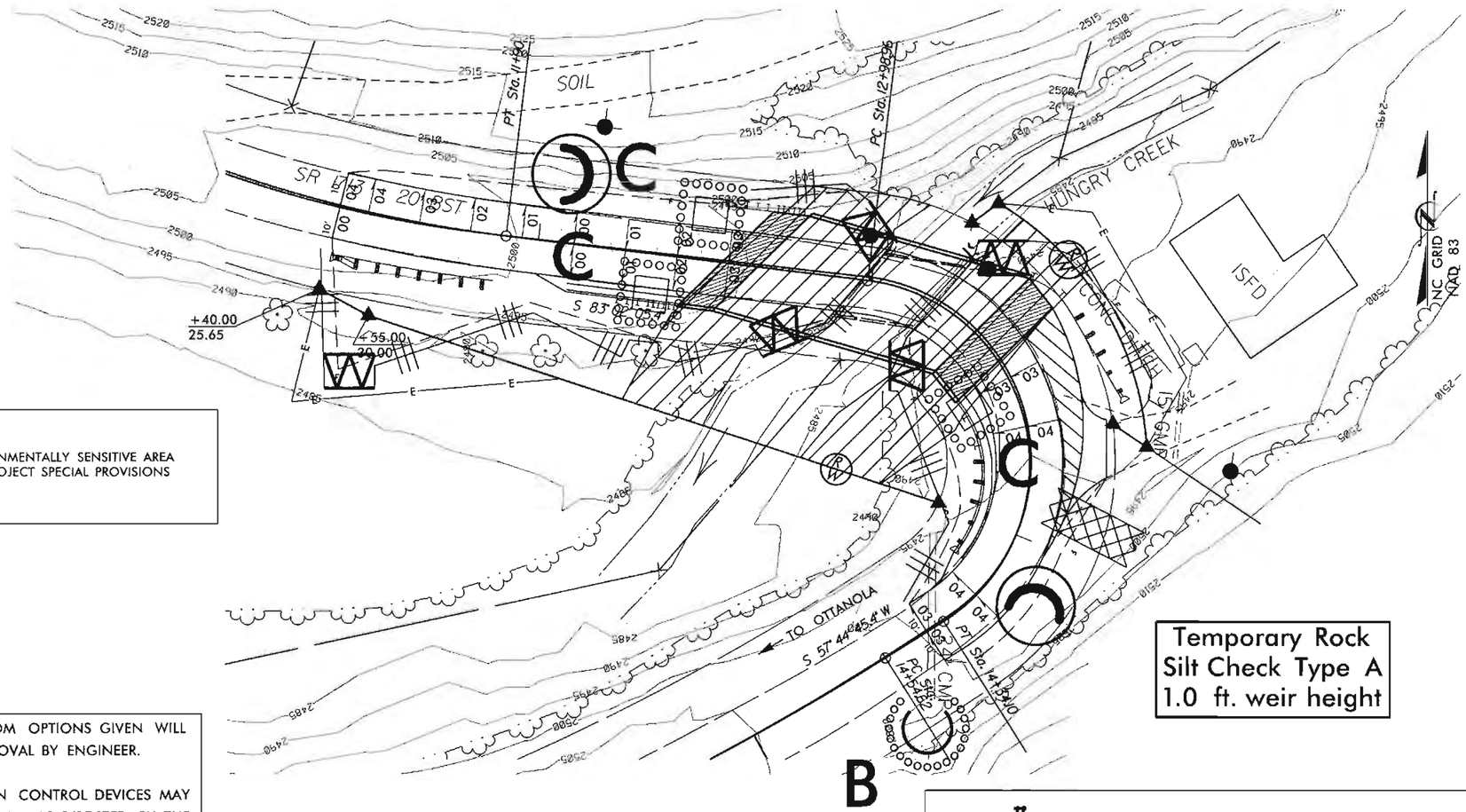

Temporary Rock Silt Check Type A 1.0 ft. weir height

ENVIRONMENTALLY SENSITIVE AREA SEE PROJECT SPECIAL PROVISIONS

NOTES: ANY DEVIATION FROM OPTIONS GIVEN WILL REQUIRE PRIOR APPROVAL BY ENGINEER.

ADDITIONAL EROSION CONTROL DEVICES MAY NEED TO BE INSTALLED AS DIRECTED BY THE ENGINEER.

ROADSIDE ENVIRONMENTAL UNIT
DEPARTMENT OF TRANSPORTATION
DIVISION OF HIGHWAYS
RALEIGH, N.C.

2012 STANDARD SPECIFICATIONS

2012 STANDARD DRAWINGS

1604.01	Railroad Erosion Control Detail
1605.01	Temporary Silt Fence
1606.01	Special Sediment Control Fence
1607.01	Gravel Construction Entrance
1622.01	Temporary Berms and Slope Drains
1630.01	Riser Basin
1630.02	Silt Basin Type B
1630.03	Temporary Silt Ditch
1630.04	Stilling Basin
1630.05	Temporary Diversion
1630.06	Special Stilling Basin
1631.01	Matting Installation
1632.01	Rock Inlet Sediment Trap Type A
1632.02	Rock Inlet Sediment Trap Type B
1632.03	Rock Inlet Sediment Trap Type C
1633.01	Temporary Rock Silt Check Type A
1633.02	Temporary Rock Silt Check Type B
1634.01	Temporary Rock Sediment Dam Type A
1634.02	Temporary Rock Sediment Dam Type B
1635.01	Rock Pipe Inlet Sediment Trap Type A
1635.02	Rock Pipe Inlet Sediment Trap Type B
1640.01	Coir Fiber Baffle
1645.01	Temporary Stream Crossing

Std. #	Description	Symbol
1605.01	Temporary Silt Fence	
1606.01	Special Sediment Control Fence	
1632.03	Rock Inlet Sediment Trap Type C	
1633.01	Temporary Rock Silt Check Type-A	
1635.02	Rock Pipe Inlet Sediment Trap Type-B	
	Wattle with Polyacrylamide (PAM)	

Vaughn & Melton Consulting Engineers
Asheville, North Carolina 828-253-2796
Charlotte, North Carolina 704-895-9561
Tri-Cities, Tennessee 423-467-8401
Knoxville, Tennessee 865-546-5600
Middlesboro, Kentucky 606-248-6600
Spartanburg, South Carolina 864-574-4775

Copyright © 1994 Vaughn & Melton, Inc. All Rights Reserved

WETHERILL ENGINEERING

Anne Gamber
LEVEL IIIA NAME

3022
LEVEL IIIA CERTIFICATION NO.

REVISIONS

8/17/99

2:24:34 PM
F:\2011\Division 14\Vaughn-Melton\BD-5114B Henderson\EROSION CONTROL\BD5114B_EC.dgn
5/8/2012

PROJECT REFERENCE NO.	SHEET NO.
BD-5114B	EC-2
ROADWAY DESIGN ENGINEER	HYDRAULICS ENGINEER

DIVISION OF HIGHWAYS
STATE OF NORTH CAROLINA

SOIL STABILIZATION TIMEFRAMES

SITE DESCRIPTION	STABILIZATION TIME	TIMEFRAME EXCEPTIONS
PERIMETER DIKES, SWALES, DITCHES AND SLOPES	7 DAYS	NONE
HIGH QUALITY WATER (HQW) ZONES	7 DAYS	NONE
SLOPES STEEPER THAN 3:1	7 DAYS	IF SLOPES ARE 10' OR LESS IN LENGTH AND ARE NOT STEEPER THAN 2:1, 14 DAYS ARE ALLOWED.
SLOPES 3:1 OR FLATTER	14 DAYS	7 DAYS FOR SLOPES GREATER THAN 50' IN LENGTH.
ALL OTHER AREAS WITH SLOPES FLATTER THAN 4:1	14 DAYS	NONE, EXCEPT FOR PERIMETERS AND HQW ZONES.

PROJECT REFERENCE NO.	SHEET NO.
BD-5114B	EC-3
R/W SHEET NO.	
ROADWAY DESIGN ENGINEER	HYDRAULICS ENGINEER

WATTLE WITH POLYACRYLAMIDE (PAM) DETAIL

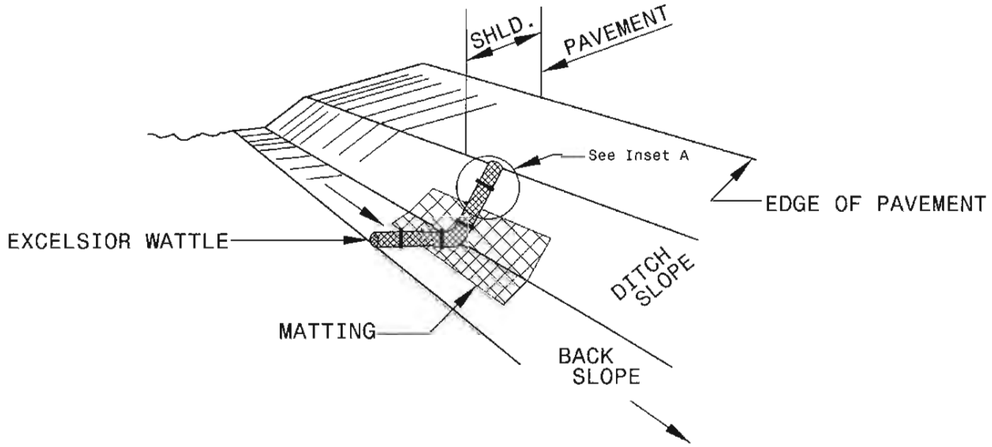

ISOMETRIC VIEW

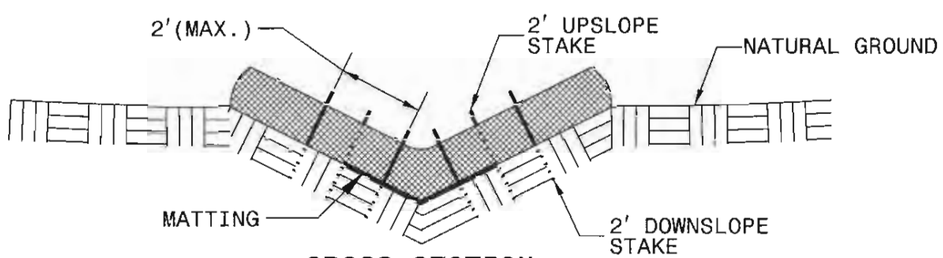

CROSS SECTION VEE DITCH

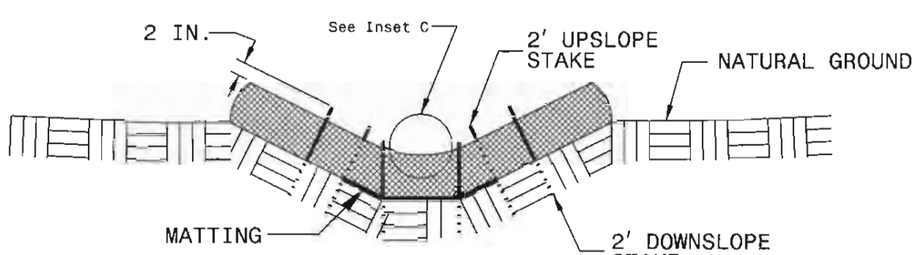

CROSS SECTION TRAPEZOIDAL DITCH

NOTES:

USE MINIMUM 12 IN. DIAMETER EXCELSIOR WATTLE.

USE 2 FT. WOODEN STAKES WITH A 2 IN. BY 2 IN. NOMINAL CROSS SECTION.

ONLY INSTALL WATTLE(S) TO A HEIGHT IN DITCH SO FLOW WILL NOT WASH AROUND WATTLE AND SCOUR DITCH SLOPES AND AS DIRECTED.

INSTALL A MINIMUM OF 2 UPSLOPE STAKES AND 4 DOWNSLOPE STAKES AT AN ANGLE TO WEDGE WATTLE TO BOTTOM OF DITCH.

PROVIDE STAPLES MADE OF 0.125 IN. DIAMETER STEEL WIRE FORMED INTO A U SHAPE NOT LESS THAN 12" IN LENGTH.

INSTALL STAPLES APPROXIMATELY EVERY 1 LINEAR FOOT ON BOTH SIDES OF WATTLE AND AT EACH END TO SECURE IT TO THE SOIL.

INSTALL MATTING IN ACCORDANCE WITH SECTION 1631 OF THE STANDARD SPECIFICATIONS.

PRIOR TO POLYACRYLAMIDE (PAM) APPLICATION, OBTAIN A SOIL SAMPLE FROM PROJECT LOCATION, AND FROM OFFSITE MATERIAL, AND ANALYZE FOR APPROPRIATE PAM FLOCCULANT TO BE APPLIED TO EACH WATTLE.

INITIALLY APPLY 2 OUNCES OF ANIONIC OR NEUTRALLY CHARGED PAM OVER WATTLE WHERE WATER WILL FLOW AND 1 OUNCE OF PAM ON MATTING ON EACH SIDE OF WATTLE. REAPPLY PAM AFTER EVERY RAINFALL EVENT THAT IS EQUAL TO OR EXCEEDS 0.50 IN.

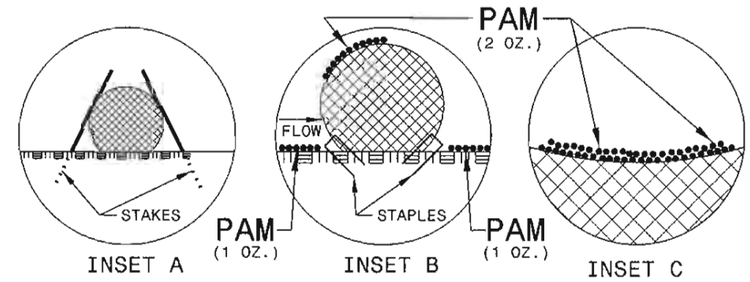

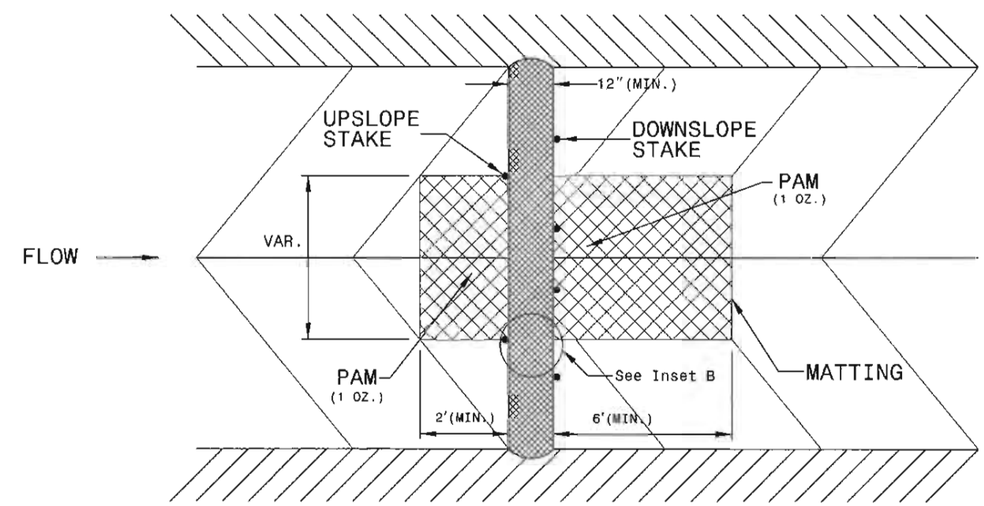

TOP VIEW

PROJECT REFERENCE NO.	SHEET NO.
BD-5114B	EC-4
ROADWAY DESIGN ENGINEER	HYDRAULICS ENGINEER

DIVISION OF HIGHWAYS
STATE OF NORTH CAROLINA

SOIL STABILIZATION SUMMARY SHEET

MATTING FOR EROSION CONTROL (SLOPES)

CONST SHEET NO.	LINE	FROM STATION	TO STATION	SIDE	ESTIMATE (SY)
EC-4	-L-	11+40	12+50	RT	162
EC-4	-L-	13+40	14+40	RT	59
EC-4	-L-	11+40	12+50	LT	44
EC-4	-L-	13+35	13+70	LT	8
EC-4	-L-	13+80	14+40	LT	37
				SUBTOTAL	310
MISCELLANEOUS MATTING TO BE INSTALLED AS DIRECTED BY THE ENGINEER					0
				TOTAL	310
				SAY	310

PERMANENT SOIL REINFORCEMENT MAT

CONST SHEET NO.	LINE	FROM STATION	TO STATION	SIDE	ESTIMATE (SY)
EC-4	-L-	11+50	12+40	LT	85
				SUBTOTAL	85
		ADDITIONAL PSRM TO BE INSTALLED			0
				TOTAL	85
				SAY	85

T.I.P. NO.	SHEET NO.
BD-5114B	UO-1

TIP PROJECT: BD-5114B

See Sheet 1A For Index of Sheets
See Sheet 1B For Standard Symbology Sheet

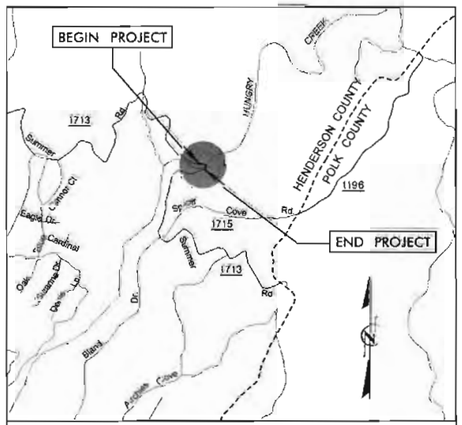

VICINITY MAP

N.T.S.

STATE OF NORTH CAROLINA
DIVISION OF HIGHWAYS

UTILITIES BY OTHERS PLANS
HENDERSON COUNTY

LOCATION: BRIDGE #128 OVER HUNGRY CREEK ON SR 1713 (SUMMER ROAD)

TYPE OF WORK: AERIAL TELEPHONE

NSRS 2007

NAD 83

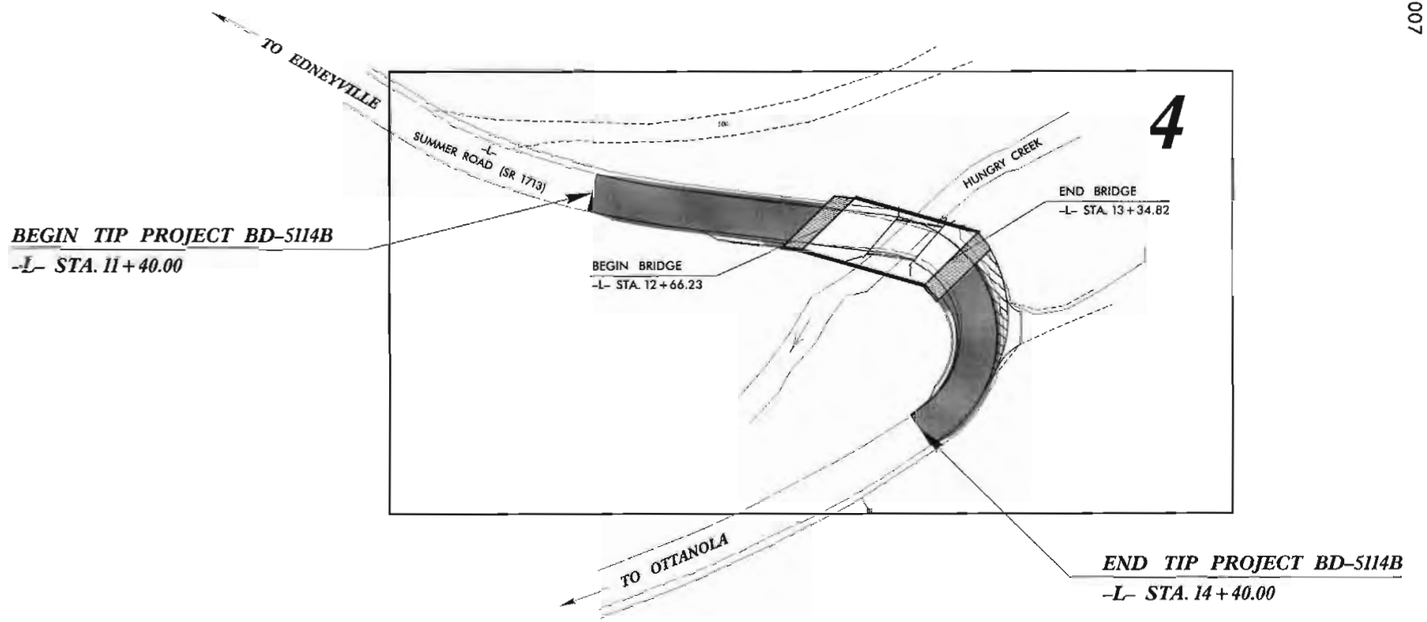

GRAPHIC SCALES

20 10 0 20 40

PLANS

INDEX OF SHEETS

SHEET NO.	DESCRIPTION
UO-1	TITLE SHEET
UO-2	UTILITY BY OTHERS PLAN SHEETS

UTILITY OWNERS ON PROJECT

(1) TELEPHONE - AT&T
(2) POWER - DUKE ENERGY

SEAL

NORTH CAROLINA PROFESSIONAL SEAL ENGINEER REECE M. SCHULER

5/8/12

V&M
Vaughn & Melton
Consulting Engineers
3089-L Beam Road
Charlotte, NC 28217
704-357-0488

STATE OF NORTH CAROLINA DEPARTMENT OF TRANSPORTATION

PREPARED IN THE OFFICE OF:
DIVISION OF HIGHWAYS
UTILITIES ENGINEERING SECTION
1591 MAIL SERVICES CENTER
RALEIGH NC 27699-1591
PHONE (919) 250-4128
FAX (919) 250-4119

Roger Worthington, P.E.	UTILITIES SECTION ENGINEER
Xxxxx Xxxxx, P.E.	UTILITIES SQUAD LEADER PROJECT ENGINEER
Reece Schuler, PE	UTILITIES PROJECT DESIGNER

PROJECT REFERENCE NO.	SHEET NO.
BD-5114B	U0-2

UTILITIES BY OTHERS

NOTE:
ALL PROPOSED UTILITY WORK SHOWN ON THIS SHEET WILL BE DONE BY OTHERS

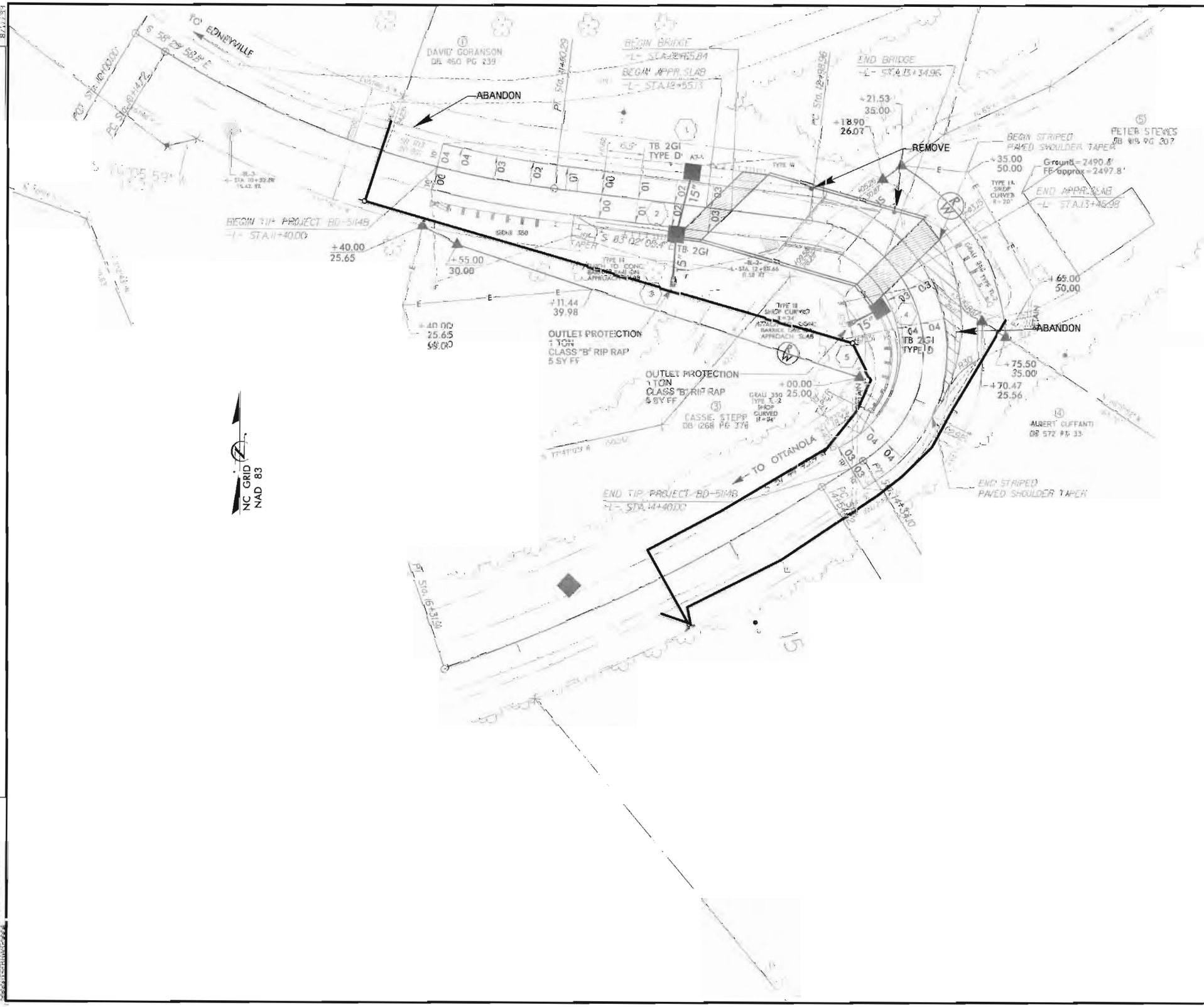

DATUM DESCRIPTION

THE LOCALIZED COORDINATE SYSTEM DEVELOPED FOR THIS PROJECT IS BASED ON THE STATE PLANE COORDINATES ESTABLISHED BY NCDOT FOR MONUMENT "440128 BL-2"
NORTH NAD 83/NSRS 2007 STATE PLANE GRID COORDINATES OF NORTHING: 606495.678 (ft) EASTING: 1020575.999 (ft)
ELEVATION: 2492.8751 (ft)
THE AVERAGE COMBINED GRID FACTOR USED ON THIS PROJECT (GROUND TO GRID) IS: 0.9999760057
THE N.C. LAMBERT GRID BEARING AND LOCALIZED HORIZONTAL GROUND DISTANCE FROM "440128 BL-2" TO -L- STATION IS

ALL LINEAR DIMENSIONS ARE LOCALIZED HORIZONTAL DISTANCES
VERTICAL DATUM USED IS NAVD 88

BL-1	N 606349.825	E 1020491.014	ELEV 2509.11
BL-2	N 606495.678	E 1020575.999	ELEV 2492.88
BL-3	N 606541.259	E 1020347.688	ELEV 2506.09

Vaughn & Melton
Consulting Engineers
Asheville, North Carolina
Tri-Cities, Tennessee
Knoxville, Tennessee
Middlesboro, Kentucky
Charlotte, North Carolina
Spartanburg, South Carolina

REVISIONS

COMPUTED BY: WCC	DATE: 10-04-11
CHECKED BY: ACC	DATE: 10-04-11

PROJECT REFERENCE NO.	SHEET NO.
BD-5114B	X-0

DIVISION OF HIGHWAYS
STATE OF NORTH CAROLINA

CROSS SECTION SUMMARY

IN CUBIC YARDS

-L- LOCATION	UNCLASSIFIED EXCAVATION	EMBT
11+40	0	0
11+50	5	35
12+00	26	90
12+50	14	23
12+65.84 BEGIN BRIDGE	1	16
13+34.96 END BRIDGE	0	0
13+50	0	76
14+00	3	131
14+40	5	8

NOTE: EMBANKMENT COLUMN DOES NOT INCLUDE BACKFILL FOR UNDERCUT.

Approximate quantities only. Unclassified excavation, borrow excavation, fine grading, clearing and grubbing, and removal of existing pavement will be paid for at the contract lump sum price for "grading".

8/23/99

0 2.5 5	PROJ. REFERENCE NO.	SHEET NO.
	BD-5114B	X-1

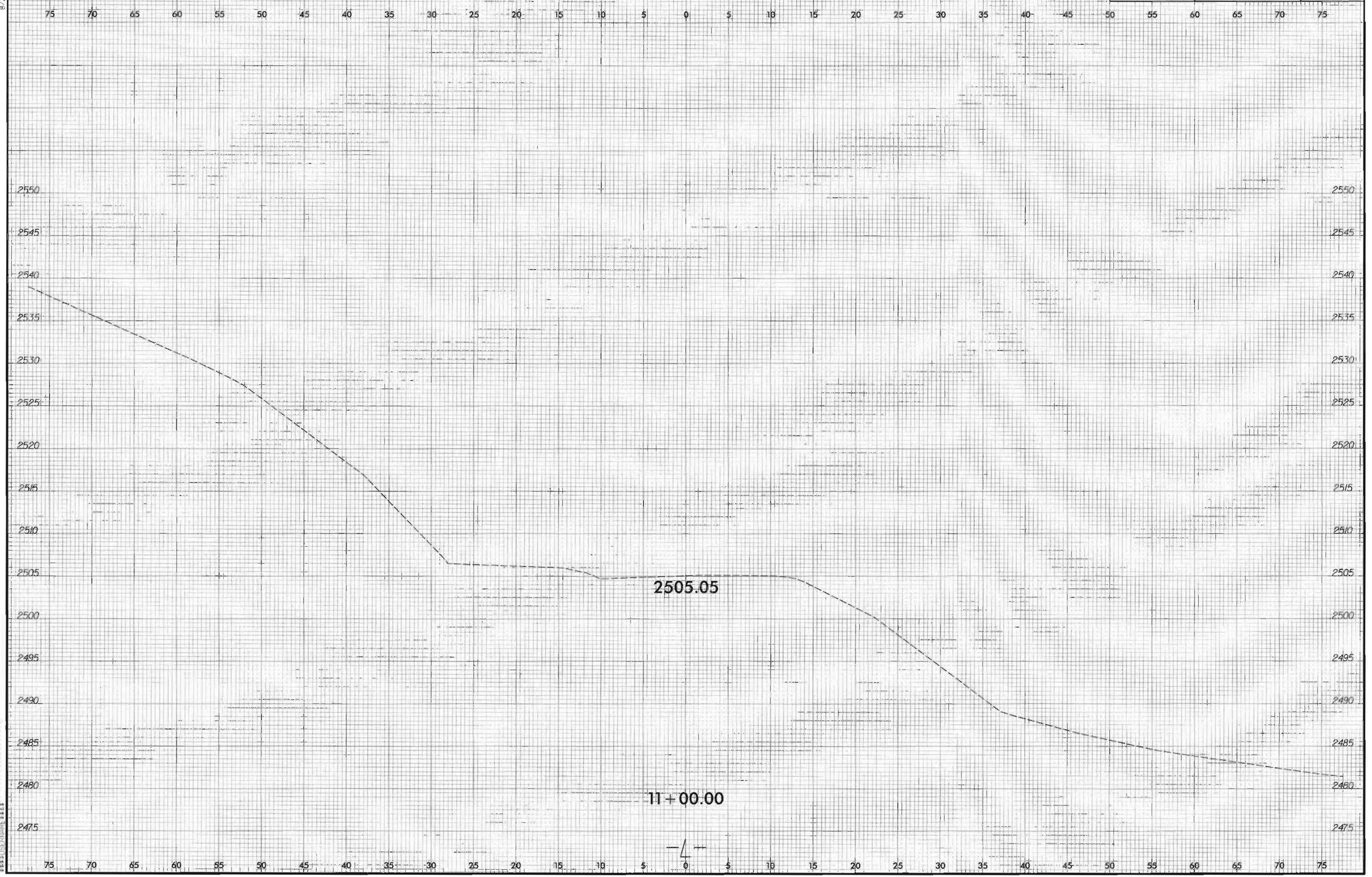

0 2.5 5	PROJ. REFERENCE NO.	SHEET NO.
	BD-5114B	X-2

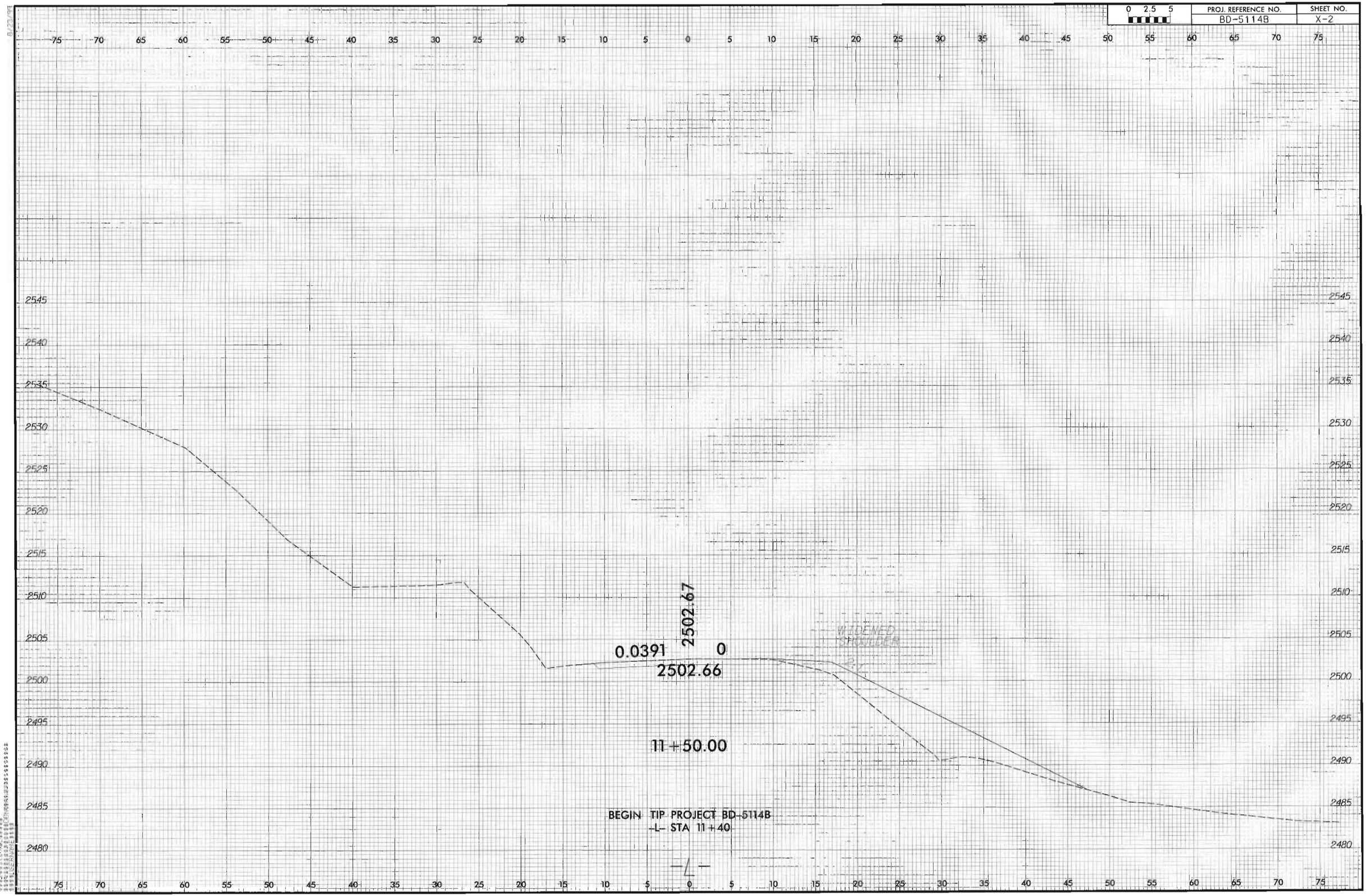

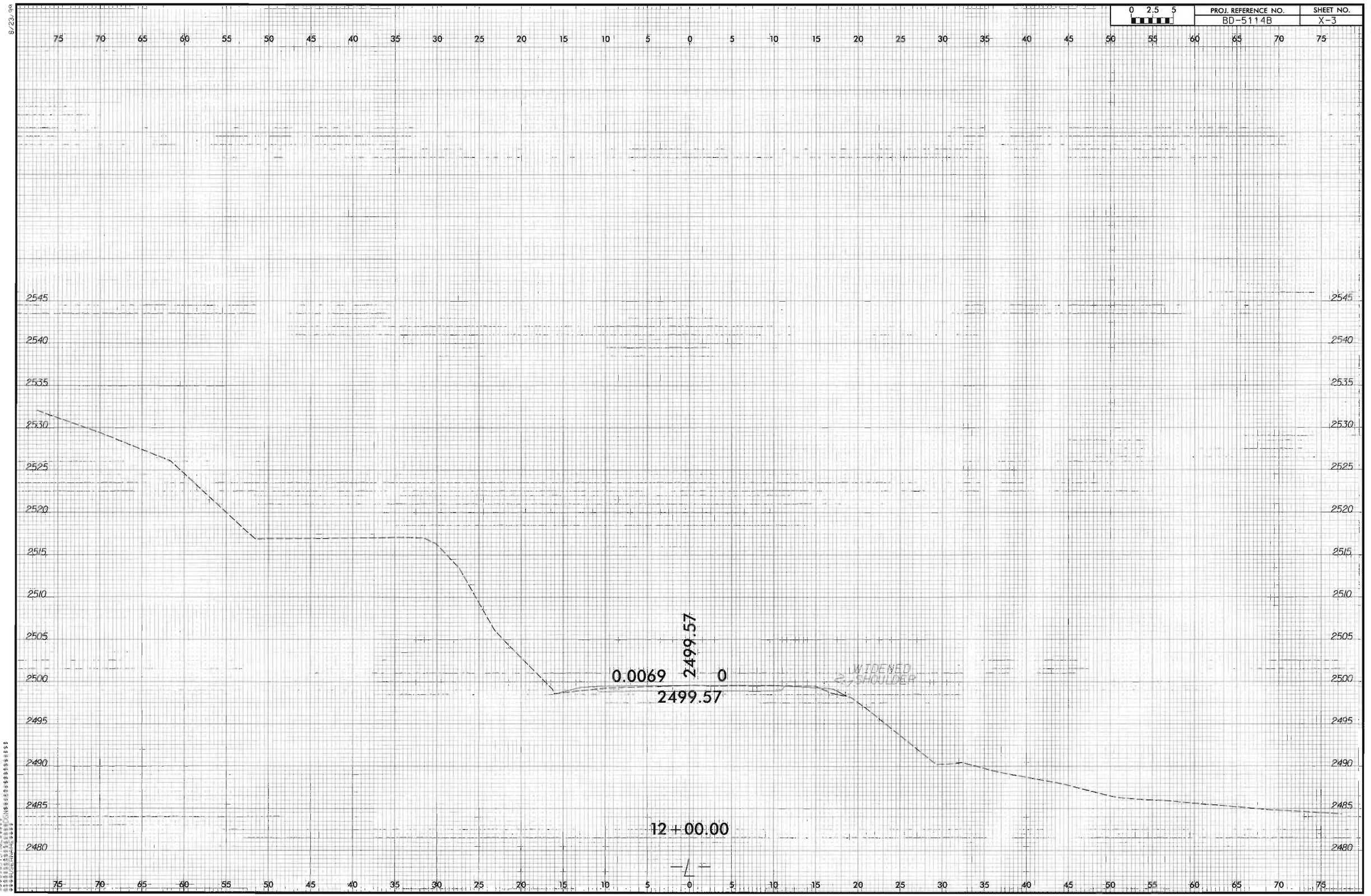

0 2.5 5
PROJ. REFERENCE NO.
BD-5114B
SHEET NO.
X-3
0.0069
2499.57
0
2499.57
WIDENED SHOULDER
12+00.00
-L-

8/23/96

0 2.5 5	PROJ. REFERENCE NO.	SHEET NO.
	BD-5114B	X-4

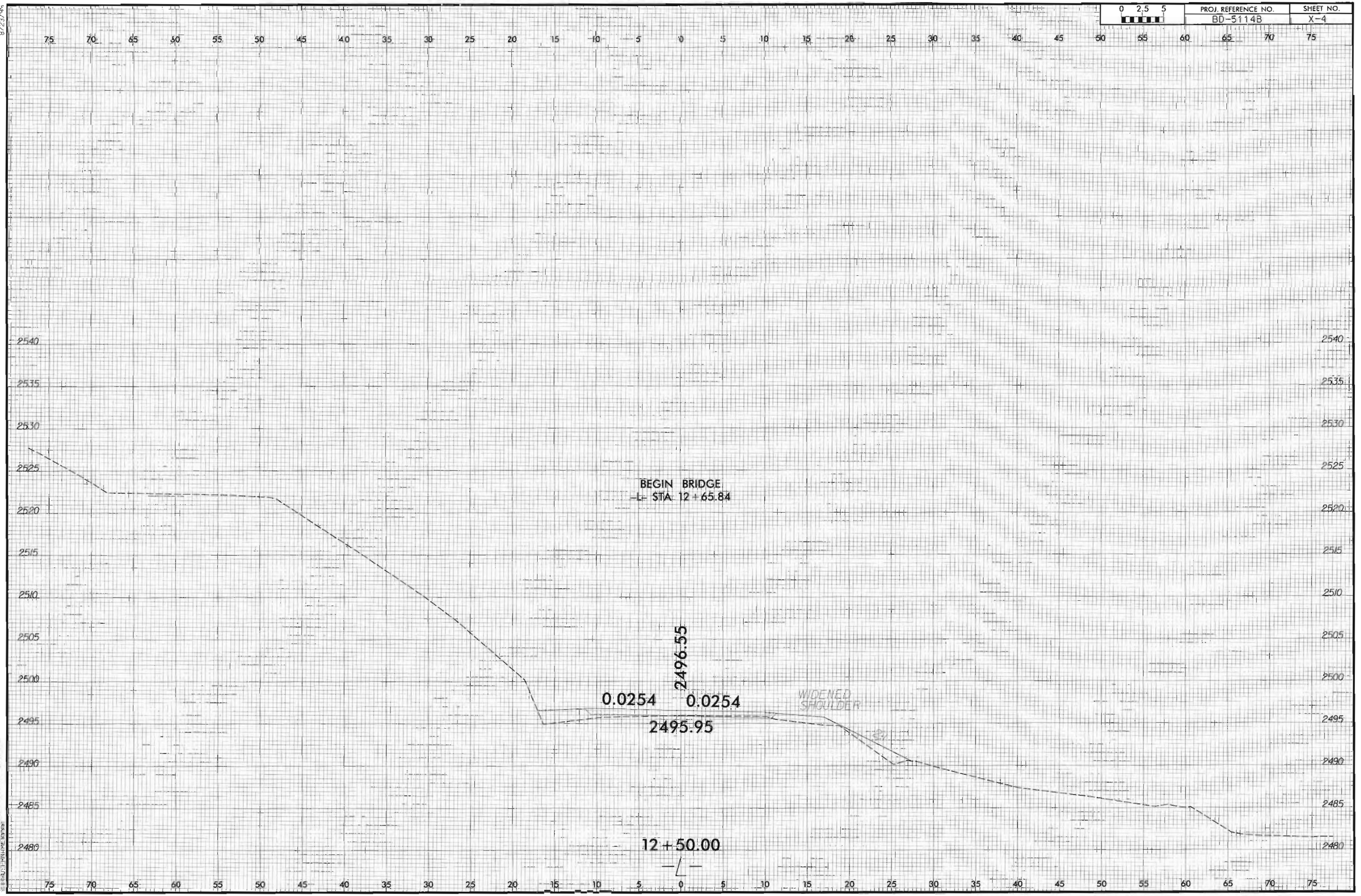

0 2.5 5	PROJ. REFERENCE NO.	SHEET NO.
	BD-5114B	X-5

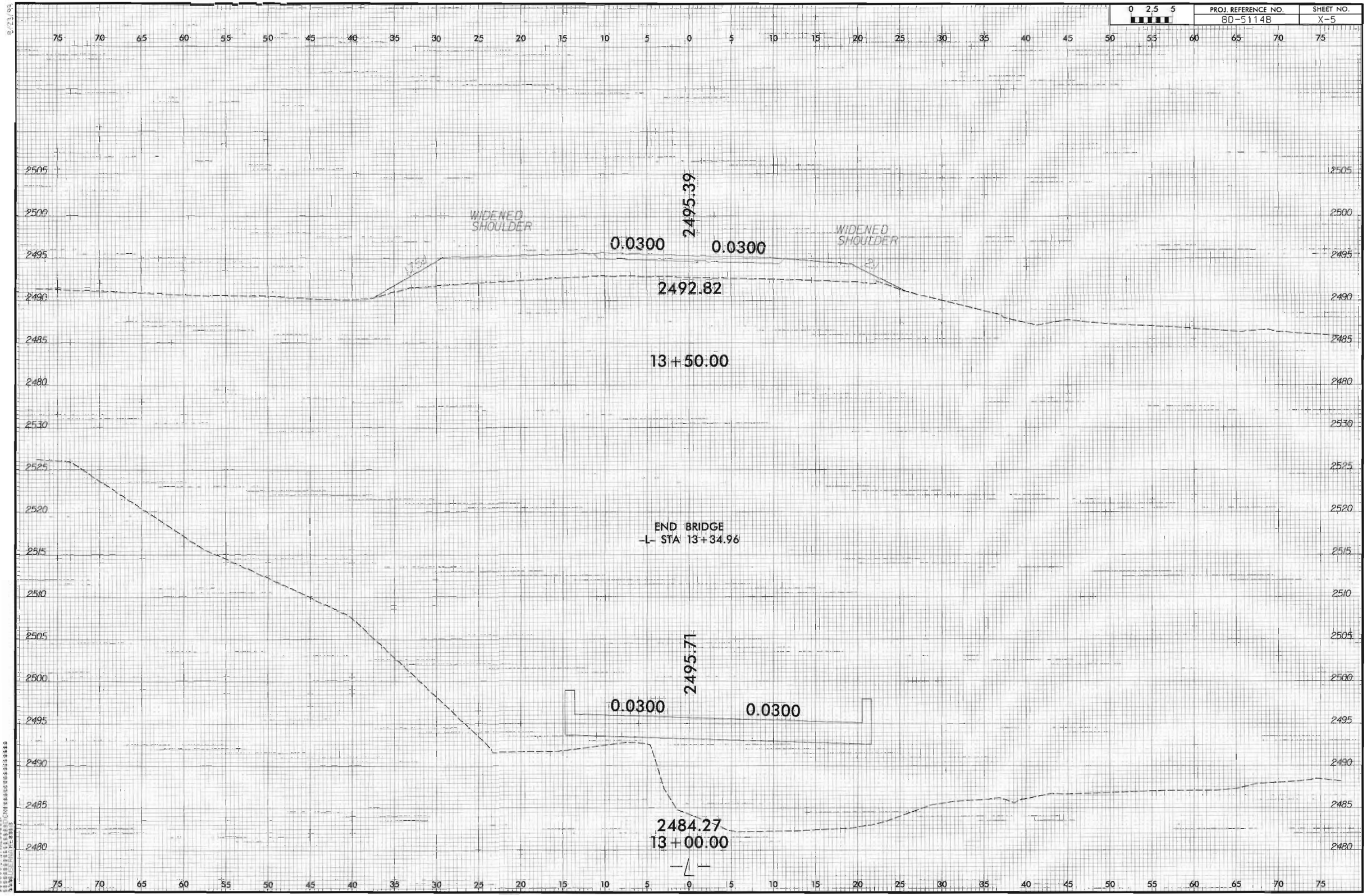

0 2.5 5	PROJ. REFERENCE NO.	SHEET NO.
	BD-5114B	X-6

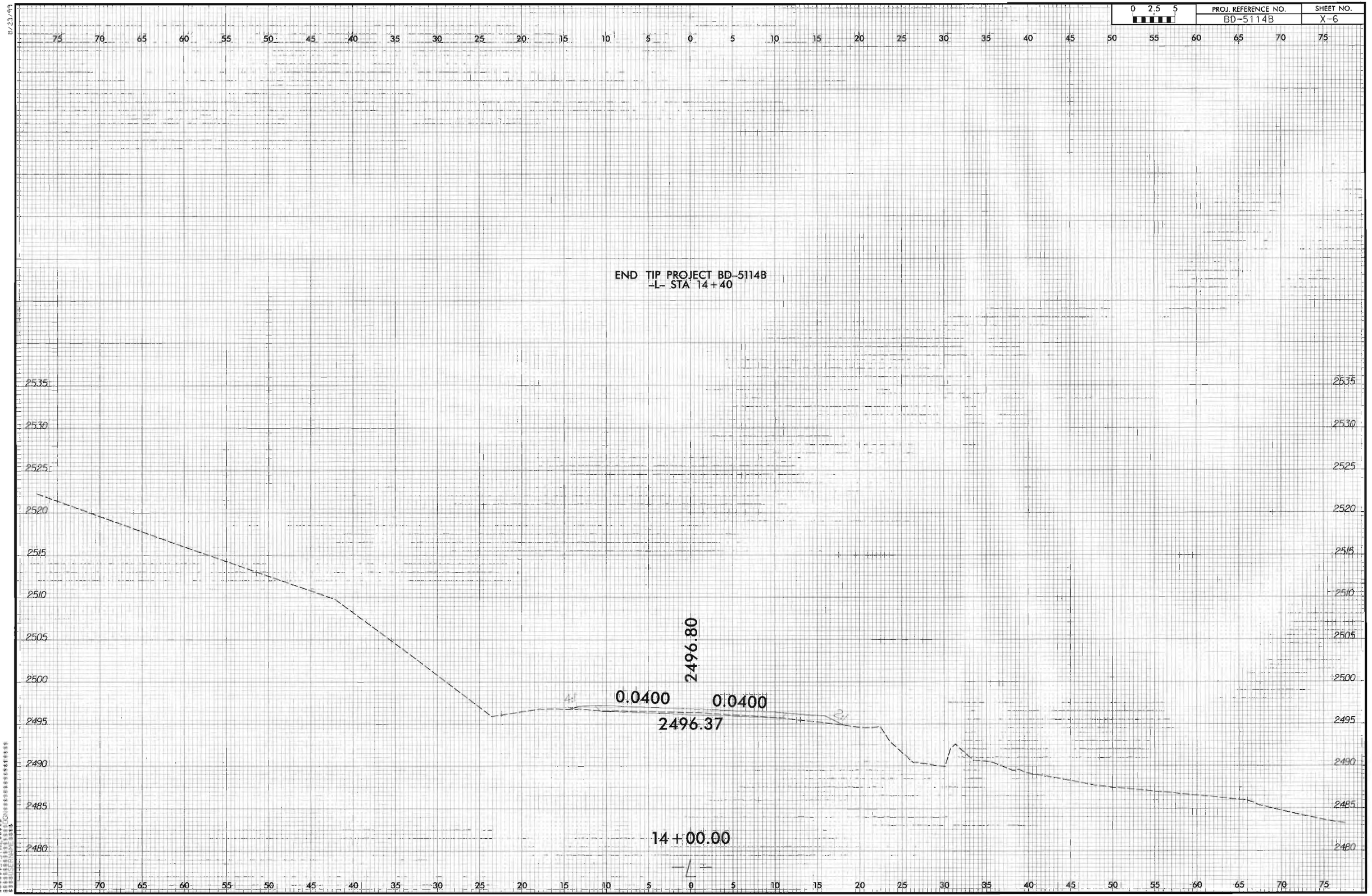

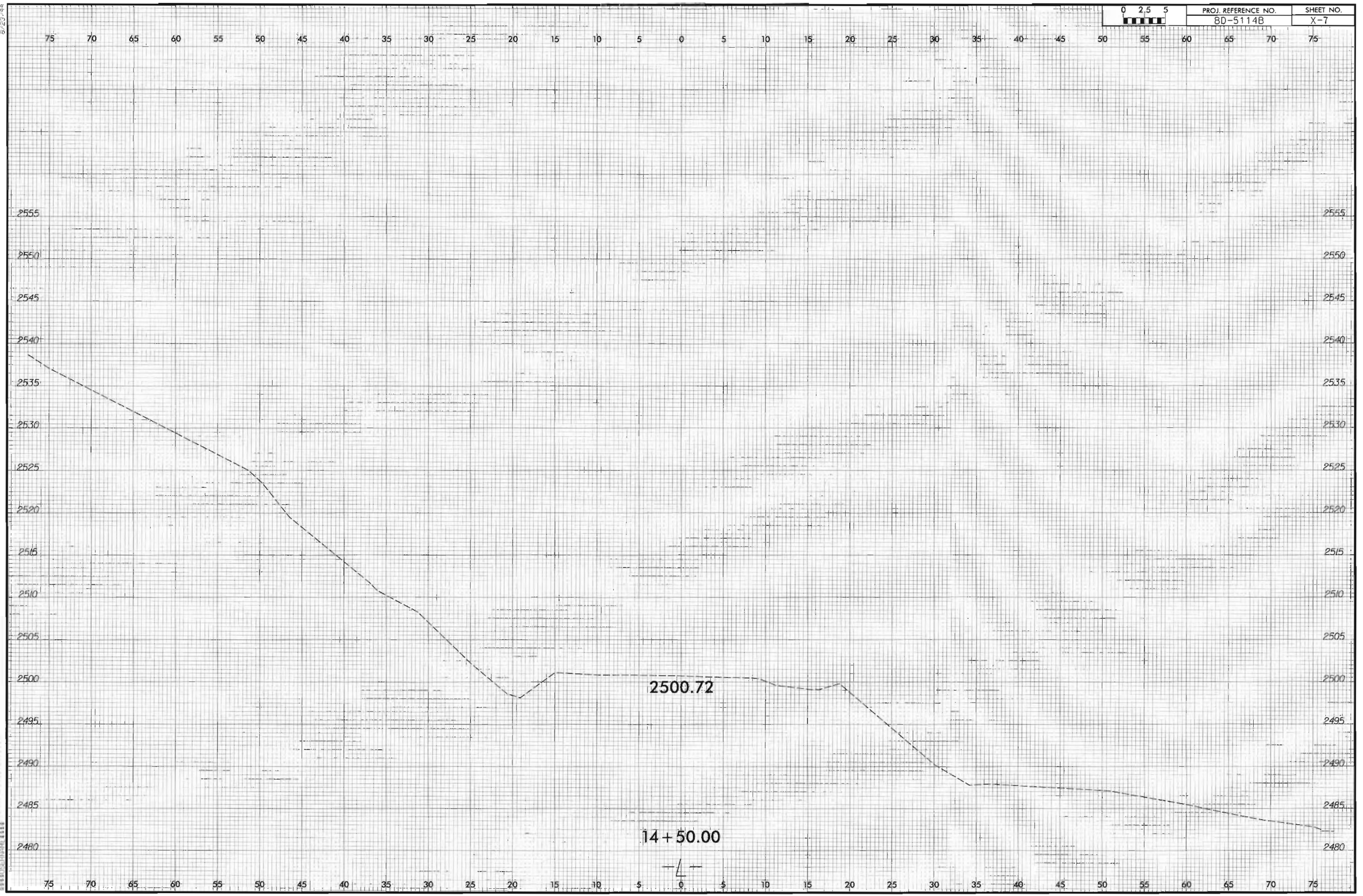

0 2.5 5
PROJ. REFERENCE NO.
8D-5114B
SHEET NO.
X-7
2500.72
14+50.00

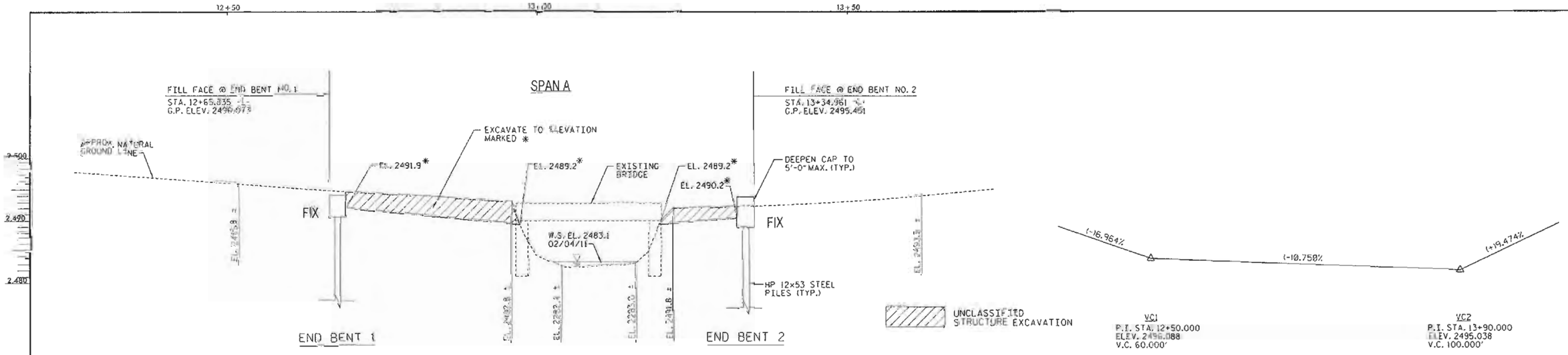

SECTION ALONG ℄ SURVEY -L-

SECTIONS AT END BENTS ARE AT RIGHT ANGLES.

GRADE DATA -L-

PI Sta 14+53.34
Δ = 140° 46' 50.9" (RT)
D = 104° 10' 26.9"
L = 135.14'
T = 154.38'
R = 55.00'

HORIZONTAL CURVE DATA -L-

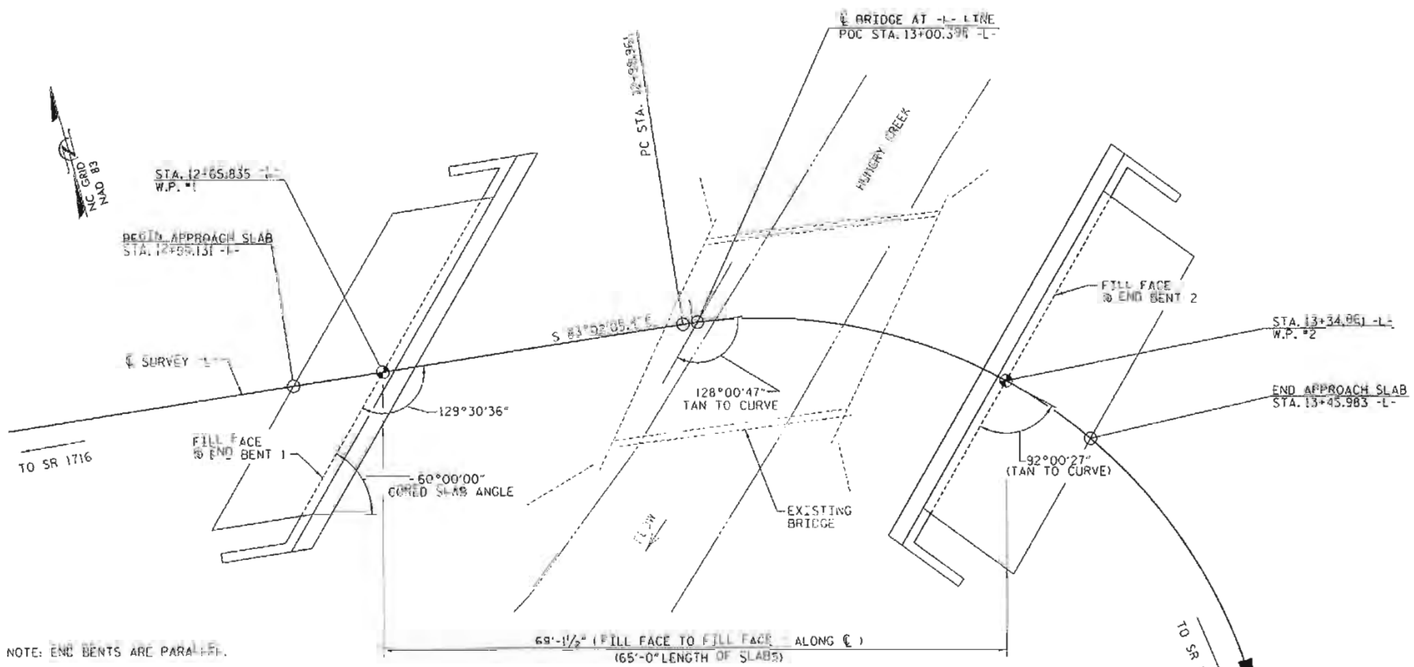

NOTE: END BENTS ARE PARALLEL.

PLAN ALONG ℄ SURVEY -L-

PROJECT NO. BD-5114B

HENDERSON COUNTY

STATION: 13+00.40 -L-

SHEET 1 OF 3 REPLACES BRIDGE NO. 128

STATE OF NORTH CAROLINA
DEPARTMENT OF TRANSPORTATION
RALEIGH

GENERAL DRAWING

FOR BRIDGE #128 on SR 1713 (SUMMER RD.)
over HUNGRY CREEK
Between SR 1716 & SR 1715

JAN 2012

V&M
Vaughn & Melton
Consulting Engineers
Asheville, North Carolina
Charlotte, North Carolina
Tri-Cities, Tennessee
Knoxville, Tennessee
Middlesboro, Kentucky
Spartanburg, South Carolina

NORTH CAROLINA PROFESSIONAL SEAL 20777 ENGINEER HARDY L. WILLIS
2/21/12

REVISIONS						SHEET NO.
NO.	BY:	DATE:	NO.	BY:	DATE:	S-1
1			3			TOTAL SHEETS
2			4			16

DWN. BY: MAF DATE: JAN 2012
CHKD. BY: HLW DATE: JAN 2012

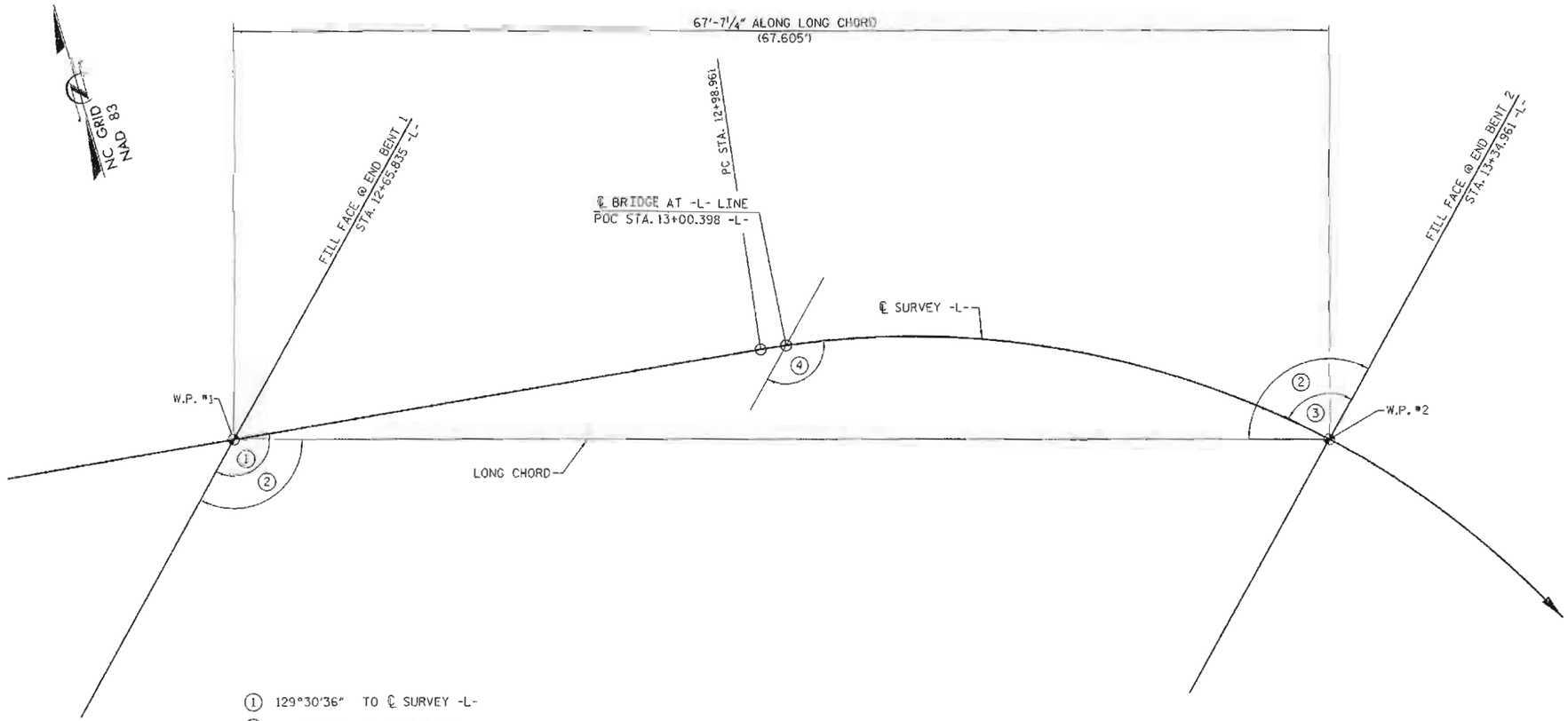

PI Sta 14+53.34
Δ = 140° 46' 50.9" (RT)
D = 104° 10' 26.9"
L = 135.14'
T = 154.38'
R = 55.00'

HORIZONTAL CURVE DATA -L-

① 129°30'36" TO ℄ SURVEY -L-
② 120°00'00" TO LONG CHORD
③ 92°00'27" TAN TO CURVE, ℄ SURVEY -L-
④ 128°00'47" TAN TO CURVE, ℄ SURVEY -L-

LONG CHORD LAYOUT
END BENTS ARE PARALLEL

PROJECT NO. BD-5114B
HENDERSON COUNTY
STATION: 13+00.40 -L-

SHEET 2 OF 3

STATE OF NORTH CAROLINA
DEPARTMENT OF TRANSPORTATION
RALEIGH

GENERAL DRAWING

FOR BRIDGE #128 on SR 1713 (SUMMER RD.)
over HUNGRY CREEK
Between SR 1716 & SR 1715

JAN 2012

V&M
Vaughn & Melton
Consulting Engineers
Asheville, North Carolina
828-253-2796
Charlotte, North Carolina
Tri-Cities, Tennessee
Knoxville, Tennessee
Middlesboro, Kentucky
Spartanburg, South Carolina

NORTH CAROLINA PROFESSIONAL SEAL 20777 ENGINEER HARDY L. WILLIS
2/24/12

DWN. BY: MAF DATE: JAN 2012
CHKD. BY: HLW DATE: JAN 2012

REVISIONS						SHEET NO.
NO.	BY:	DATE:	NO.	BY:	DATE:	S-2
1			3			TOTAL SHEETS
2			4			16

BL1- 18" REBAR WITH CAP - N 606349.8250 E 1020491.0140 ELEV. 2509.11 -L- STA. 15+69.63 13.6 FT. RT

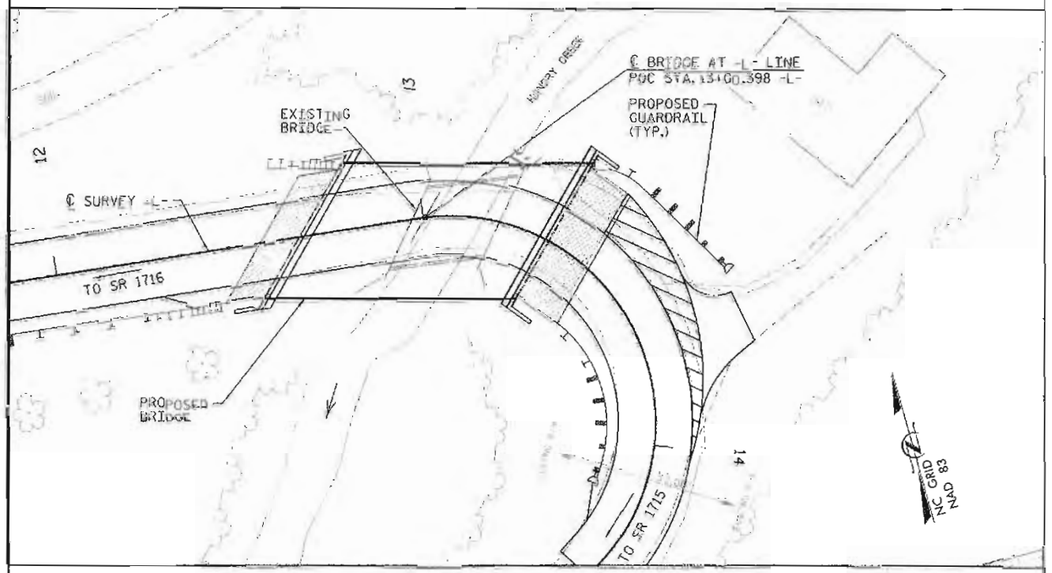

LOCATION SKETCH

GENERAL NOTES:

ASSUMED LIVE LOAD = HL-93 OR ALTERNATE LOADING.

THIS BRIDGE HAS BEEN DESIGNED IN ACCORDANCE WITH THE REQUIREMENTS OF THE AASHTO LRFD BRIDGE DESIGN SPECIFICATIONS. THIS BRIDGE IS LOCATED IN SEISMIC PERFORMANCE ZONE 1. NO DETAILED SEISMIC DESIGN IS REQUIRED.

FOR OTHER DESIGN DATA AND GENERAL NOTES, SEE "STANDARD NOTES" SHEET

FOR EROSION CONTROL MEASURES, SEE EROSION CONTROL PLANS.

REMOVAL OF THE EXISTING BRIDGE SHALL BE PERFORMED SO AS NOT TO ALLOW DEBRIS TO FALL INTO THE WATER. THE CONTRACTOR SHALL REMOVE THE BRIDGE AND SUBMIT PLANS FOR DEMOLITION IN ACCORDANCE WITH ARTICLE 402-2 OF THE STANDARD SPECIFICATIONS.

THE SUBSTRUCTURE OF THE EXISTING BRIDGE INDICATED ON THE PLANS IS FROM THE BEST INFORMATION AVAILABLE. SINCE THIS INFORMATION IS SHOWN FOR THE CONVENIENCE OF THE CONTRACTOR, THE CONTRACTOR SHALL HAVE NO CLAIM WHATSOEVER AGAINST THE DEPARTMENT OF TRANSPORTATION FOR ANY DELAYS OR ADDITIONAL COST INCURRED BASED ON DIFFERENCES BETWEEN THE EXISTING BRIDGE SUBSTRUCTURE SHOWN ON THE PLANS AND THE ACTUAL CONDITIONS AT THE PROJECT SITE.

THIS STRUCTURE HAS BEEN DESIGNED IN ACCORDANCE WITH HEC 18, "EVALUATING SCOUR AT BRIDGES", MAY 2001.

FOR SUBMITTAL OF WORKING DRAWINGS, SEE SPECIAL PROVISIONS.

FOR FALSEWORK AND FORMWORK, SEE SPECIAL PROVISIONS.

FOR CRANE SAFETY, SEE SPECIAL PROVISIONS.

FOR GROUT FOR STRUCTURES, SEE SPECIAL PROVISIONS.

FOR PILES, SEE SECTION 450 OF THE STANDARD SPECIFICATIONS.

PILES AT END BENT NO. 1 ARE DESIGNED FOR A FACTORED RESISTANCE OF 100 TONS PER PILE.

DRIVE PILES AT END BENT NO. 1 TO A REQUIRED DRIVING RESISTANCE OF 167 TONS PER PILE.

PILES AT END BENT NO. 2 ARE DESIGNED FOR A FACTORED RESISTANCE OF 100 TONS PER PILE.

DRIVE PILES AT END BENT NO. 2 TO A REQUIRED DRIVING RESISTANCE OF 167 TONS PER PILE.

TOTAL BILL OF MATERIAL

	REMOVAL OF EXISTING STRUCTURE AT STA. 13+00.40 -L-	UNCLASSIFIED STRUCTURE EXCAVATION AT STA. 13+00.40 -L-	CLASS A CONCRETE	BRIDGE APPROACH SLABS	REINFORCING STEEL	HP 12 X 53 STEEL PILES		3'-0" x 2'-0" PRESTRESSED CONCRETE CORED SLAB UNIT		VERTICAL CONCRETE BARRIER RAIL	ELASTOMERIC BEARINGS
	LUMP SUM	LUMP SUM	CU. YARDS	LUMP SUM	LBS.	NO.	LIN. FT.	NO.	LIN. FT.	LIN. FT.	LUMP SUM
SUPERSTRUCTURE								12	780'-0"	130.29	LUMP SUM
END BENT 1			17.0		2,521	7	90				
END BENT 2			30.8		3,237	8	160				
TOTAL	LUMP SUM	LUMP SUM	47.8	LUMP SUM	5,758	15	250	12	780'-0"	130.29	LUMP SUM

HYDROGRAPHIC DATA

DESIGN DISCHARGE = 650 CFS
DESIGN FREQUENCY = 25 YRS
DESIGN HW ELEVATION = 2488.6 FT
BASE DISCHARGE = 900 CFS
BASE FREQUENCY = 100 YRS
BASE HW ELEVATION = 2489.4 FT

OVERTOPPING FLOOD DATA

OVERTOPPING DISCHARGE = 3000 CFS
OVERTOPPING FREQUENCY = 500 YRS
OVERTOPPING ELEVATION = 2494.9 FT

PROJECT NO. BD-5114B
HENDERSON COUNTY
STATION: 13+00.40 -L-

SHEET 3 OF 3

NORTH CAROLINA PROFESSIONAL SEAL 20774 ENGINEER HARDY L. WILLIS

V&M Vaughan & Melton Consulting Engineers
Asheville, North Carolina
Charlotte, North Carolina
Tri-Cities, Tennessee
Knoxville, Tennessee
Middlesboro, Kentucky
Spartanburg, South Carolina

DWN. BY: MAF DATE: JAN 2012
CHKD. BY: HLW DATE: JAN 2012

STATE OF NORTH CAROLINA
DEPARTMENT OF TRANSPORTATION
RALEIGH

GENERAL DRAWING

FOR BRIDGE #128 on SR 1713 (SUMMER RD.)
over HUNGRY CREEK
Between SR 1716 & SR 1715

JAN 2012

REVISIONS								SHEET NO.
NO.	BY:	DATE:	NO.	BY:	DATE:			S-3
1			3					TOTAL SHEETS
2			4					16

LOAD AND RESISTANCE FACTOR RATING (LRFD) SUMMARY FOR PRESTRESSED CONCRETE GIRDERS

LEVEL		VEHICLE	WEIGHT (W) (TONS)	CONTROLLING LOAD RATING	MINIMUM RATING FACTORS (RF)	TONS = W X RF	STRENGTH I LIMIT STATE											SERVICE III LIMIT STATE						COMMENT NUMBER
								MOMENT					SHEAR						MOMENT					
							LIVELOAD FACTORS	DISTRIBUTION FACTORS (DF)	RATING FACTOR	SPAN	GIRDER LOCATION	DISTANCE FROM LEFT END OF SPAN (ft)	DISTRIBUTION FACTORS (DF)	RATING FACTOR	SPAN	GIRDER LOCATION	DISTANCE FROM LEFT END OF SPAN (ft)	LIVELOAD FACTORS	DISTRIBUTION FACTORS (DF)	RATING FACTOR	SPAN	GIRDER LOCATION	DISTANCE FROM LEFT END OF SPAN (ft)	
DESIGN LOAD RATING		HL-93(Inv)	N/A	1	1.013	--	1.75	0.248	1.16	65'	EL	31.923	0.652	**1.01**	65'	EL	**6.385**	0.80	0.248	1.12	65'	EL	31.923	
		HL-93(Opr)	N/A	--	1.313	--	1.35	0.248	1.5	65'	EL	31.923	0.652	1.31	65'	EL	6.385	N/A	--	--	--	--	--	
		HS-20(Inv)	36.000	2	1.246	44.865	1.75	0.248	1.48	65'	EL	31.923	0.652	**1.25**	65'	EL	**6.385**	0.80	0.248	1.44	65'	EL	31.923	
		HS-20(Opr)	36.000	--	1.616	58.159	1.35	0.248	1.92	65'	EL	31.923	0.652	1.62	65'	EL	6.385	N/A	--	--	--	--	--	
LEGAL LOAD RATING	SV	SNSH	13.500	--	3.163	42.696	1.4	0.248	4.07	65'	EL	31.923	0.652	3.64	65'	EL	6.385	0.80	0.248	3.16	65'	EL	31.923	
		SNGARBS2	20.000	--	2.395	47.893	1.4	0.248	3.08	65'	EL	31.923	0.652	2.61	65'	EL	6.385	0.80	0.248	2.39	65'	EL	31.923	
		SNAGRIS2	22.000	--	2.284	50.247	1.4	0.248	2.94	65'	EL	31.923	0.652	2.43	65'	EL	6.385	0.80	0.248	2.28	65'	EL	31.923	
		SNCOTTS3	27.250	--	1.575	42.917	1.4	0.248	2.03	65'	EL	31.923	0.652	1.82	65'	EL	6.385	0.80	0.248	1.57	65'	EL	31.923	
		SNAGGRS4	34.925	--	1.331	46.469	1.4	0.248	1.71	65'	EL	31.923	0.652	1.53	65'	EL	6.385	0.80	0.248	1.33	65'	EL	31.923	
		SNS5A	35.550	--	1.3	46.22	1.4	0.248	1.67	65'	EL	31.923	0.652	1.55	65'	EL	6.385	0.80	0.248	1.30	65'	EL	31.923	
		SNS6A	39.950	--	1.199	47.899	1.4	0.248	1.54	65'	EL	31.923	0.652	1.42	65'	EL	6.385	0.80	0.248	1.20	65'	EL	31.923	
		SNS7B	42.000	--	1.142	47.965	1.4	0.248	1.47	65'	EL	31.923	0.652	1.4	65'	EL	6.385	0.80	0.248	1.14	65'	EL	31.923	
	TTST	TNAGRIT3	33.000	--	1.464	48.309	1.4	0.248	1.89	65'	EL	31.923	0.652	1.69	65'	EL	6.385	0.80	0.248	1.46	65'	EL	31.923	
		TNT4A	33.075	--	1.472	48.688	1.4	0.248	1.9	65'	EL	31.923	0.652	1.64	65'	EL	6.385	0.80	0.248	1.47	65'	EL	31.923	
		TNT6A	41.600	--	1.209	50.315	1.4	0.248	1.56	65'	EL	31.923	0.652	1.51	65'	EL	6.385	0.80	0.248	1.21	65'	EL	31.923	
		TNT7A	42.000	--	1.219	51.186	1.4	0.248	1.57	65'	EL	31.923	0.652	1.46	65'	EL	6.385	0.80	0.248	1.22	65'	EL	31.923	
		TNT7B	42.000	--	1.269	53.286	1.4	0.248	1.63	65'	EL	31.923	0.652	1.37	65'	EL	6.385	0.80	0.248	1.27	65'	EL	31.923	
		TNAGRIT4	43.000	--	1.201	51.645	1.4	0.248	1.55	65'	EL	31.923	0.652	1.32	65'	EL	6.385	0.80	0.248	1.20	65'	EL	31.923	
		TNAGT5A	45.000	--	1.13	50.836	1.4	0.248	1.45	65'	EL	31.923	0.652	1.32	65'	EL	6.385	0.80	0.248	1.13	65'	EL	31.923	
		TNAGT5B	45.000	3	1.114	50.113	1.4	0.248	1.43	65'	EL	31.923	0.652	1.25	65'	EL	6.385	0.80	0.248	**1.11**	65'	EL	**31.923**	

LOAD FACTORS:

DESIGN LOAD RATING FACTORS	LIMIT STATE	γ_{DC}	γ_{DW}
	STRENGTH I	1.25	1.50
	SERVICE III	1.00	1.00

NOTES:

MINIMUM RATING FACTORS ARE BASED ON THE STRENGTH I AND SERVICE III LIMIT STATES.

ALLOWABLE STRESSES FOR SERVICE III LIMIT STATE ARE AS REQUIRED FOR DESIGN.

COMMENTS:

1.
2.
3.
4.

(#) CONTROLLING LOAD RATING

(1) DESIGN LOAD RATING (HL-93)

(2) DESIGN LOAD RATING (HS-20)

(3) LEGAL LOAD RATING **

** SEE CHART FOR VEHICLE TYPE

GIRDER LOCATION

I - INTERIOR GIRDER
EL - EXTERIOR LEFT GIRDER
ER - EXTERIOR RIGHT GIRDER

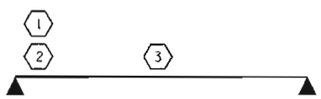

LRFR SUMMARY

FOR SPAN A

PROJECT NO. BD-5114B

HENDERSON COUNTY

STATION: 13+00.40 -L-

NORTH CAROLINA PROFESSIONAL SEAL 15779 ENGINEER JOHN R. DUGGINS, JR.

12/14/11

STATE OF NORTH CAROLINA
DEPARTMENT OF TRANSPORTATION
RALEIGH

STANDARD
LRFR SUMMARY FOR
65' CORED SLAB UNIT
60° SKEW & 120° SKEW
(NON-INTERSTATE TRAFFIC)

REVISIONS						SHEET NO.
NO.	BY:	DATE:	NO.	BY:	DATE:	S-4
1			3			TOTAL SHEETS
2			4			16

ASSEMBLED BY :	A. SORSENGINN	DATE :	8/12/2011
CHECKED BY :	H. KIM	DATE :	8/2011
DRAWN BY : CVC	6/10		
CHECKED BY : DNS	6/10		

14-DEC-2011 11:14
R:\Structures\Final Plans\BD-5114B_SD_LRFR.dgn
dahodge

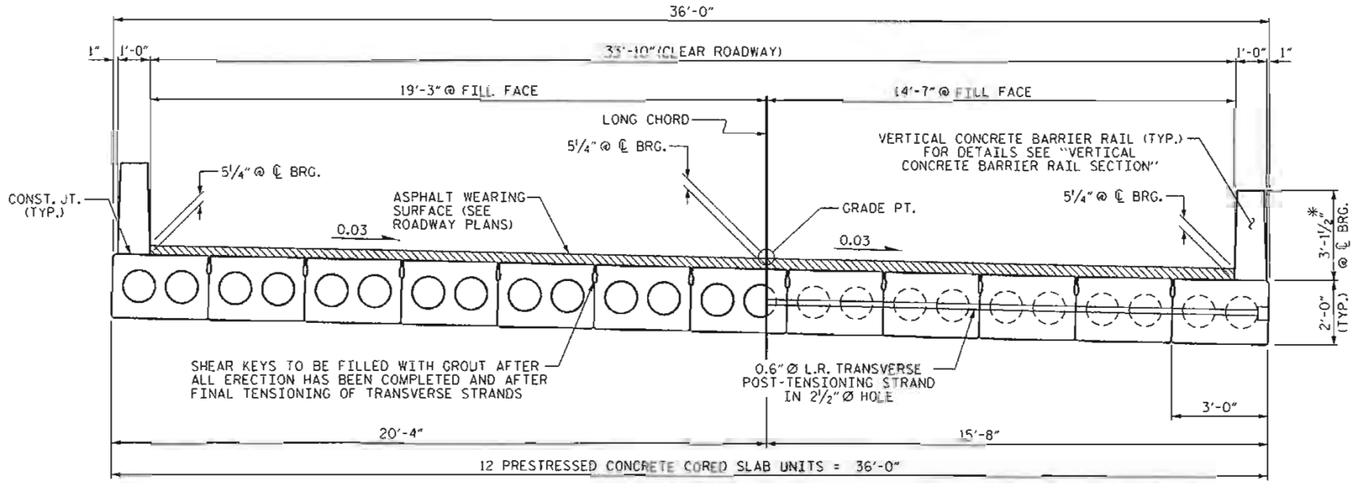

HALF SECTION
AT INTERMEDIATE DIAPHRAGMS

TYPICAL SECTION

HALF SECTION
THROUGH VOIDS

* - THE MAXIMUM BARRIER RAIL HEIGHT AND ASPHALT THICKNESS IS SHOWN. THE HEIGHT OF THE BARRIER RAIL AND ASPHALT THICKNESS VARIES WHILE THE TOP OF THE BARRIER RAIL FOLLOWS THE PROFILE OF THE GUTTERLINE. FOR RAIL HEIGHT DETAILS AND ASPHALT THICKNESS, SEE THE "VERTICAL CONCRETE BARRIER RAIL SECTION" DETAIL.

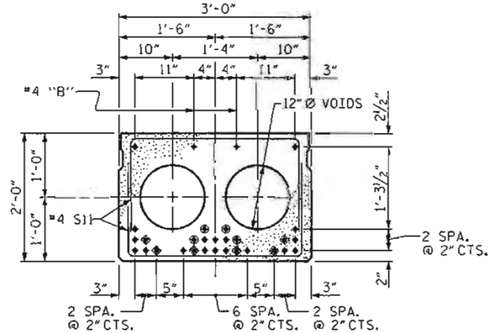

STRAND LAYOUT FOR 65' UNIT
(24 STRANDS REQUIRED)

INTERIOR SLAB SECTION
0.6" Ø LOW RELAXATION

◈ BOND SHALL BE BROKEN ON THESE STRANDS FOR A DISTANCE OF 12'-0" FROM END OF CORED SLAB UNIT. SEE STANDARD SPECIFICATIONS, ARTICLE 1078-7.

◉ OPTIONAL FULL LENGTH DEBONDED STRANDS. THESE STRANDS ARE NOT REQUIRED. IF THE FABRICATOR CHOOSES TO INCLUDE THESE STRANDS IN THE CORED SLAB UNIT, THE STRANDS SHALL BE DEBONDED FOR THE FULL LENGTH OF THE UNIT AT NO ADDITIONAL COST. SEE STANDARD SPECIFICATIONS, ARTICLE 1078-7.

DEBONDING LEGEND

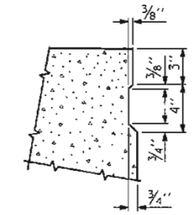

SHEAR KEY DETAIL

NOTE: OMIT SHEAR KEY ON OUTSIDE FACE OF EXTERIOR CORED SLABS.

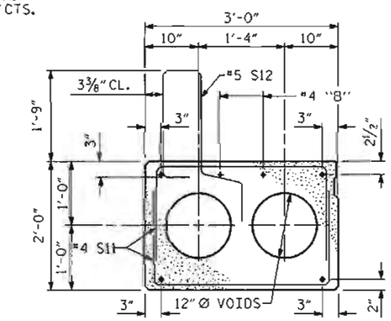

EXTERIOR SLAB SECTION

(FOR PRESTRESSED STRAND LAYOUT, SEE INTERIOR SLAB SECTION.)

FIXED END

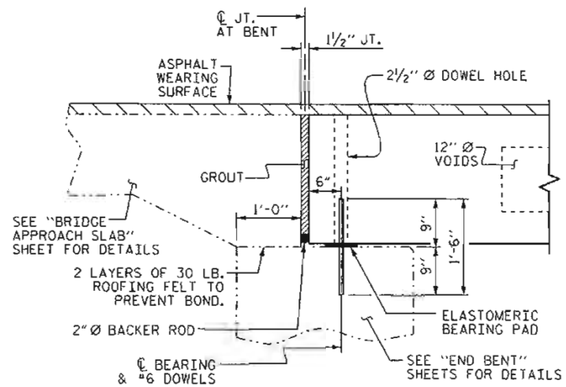

SECTION AT END BENT

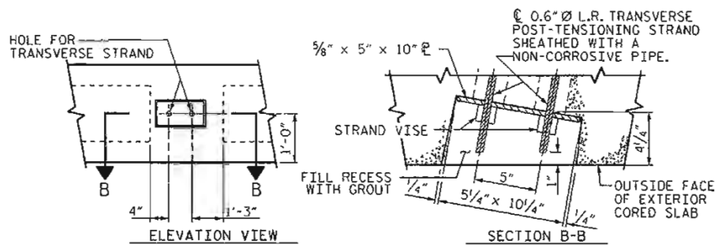

GROUTED RECESS AT END OF POST-TENSIONED STRAND OF CORED SLABS

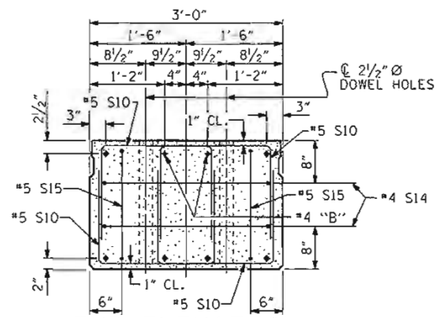

END ELEVATION

SHOWING PLACEMENT OF DOUBLE STIRRUPS AND LOCATION OF DOWEL HOLES. (STRAND LAYOUT NOT SHOWN.) INTERIOR SLAB UNIT SHOWN-EXTERIOR SLAB UNIT SIMILAR EXCEPT SHEAR KEY LOCATION.

PROJECT NO. BD-5114B
HENDERSON COUNTY
STATION: 13+00.40 -L-

SHEET 1 OF 3

STATE OF NORTH CAROLINA
DEPARTMENT OF TRANSPORTATION
RALEIGH

3'-0" X 2'-0" PRESTRESSED CONCRETE CORED SLAB UNIT

NORTH CAROLINA PROFESSIONAL SEAL 15779 ENGINEER JOHN R. DUGGINS
12/14/11

REVISIONS								SHEET NO.
NO.	BY:	DATE:	NO.	BY:	DATE:			S-5
1			3					TOTAL SHEETS
2			4					16

ASSEMBLED BY :	A. SORSENGNH	DATE :	8/12/2011
CHECKED BY :	H. KIM	DATE :	10/12/2011
DRAWN BY : MAA	6/10		
CHECKED BY : MKT	7/10		

14-DEC-2011 11:14
R:\Structures\Final Plans\BD-5114B_SD_S*.dgn
dahodge

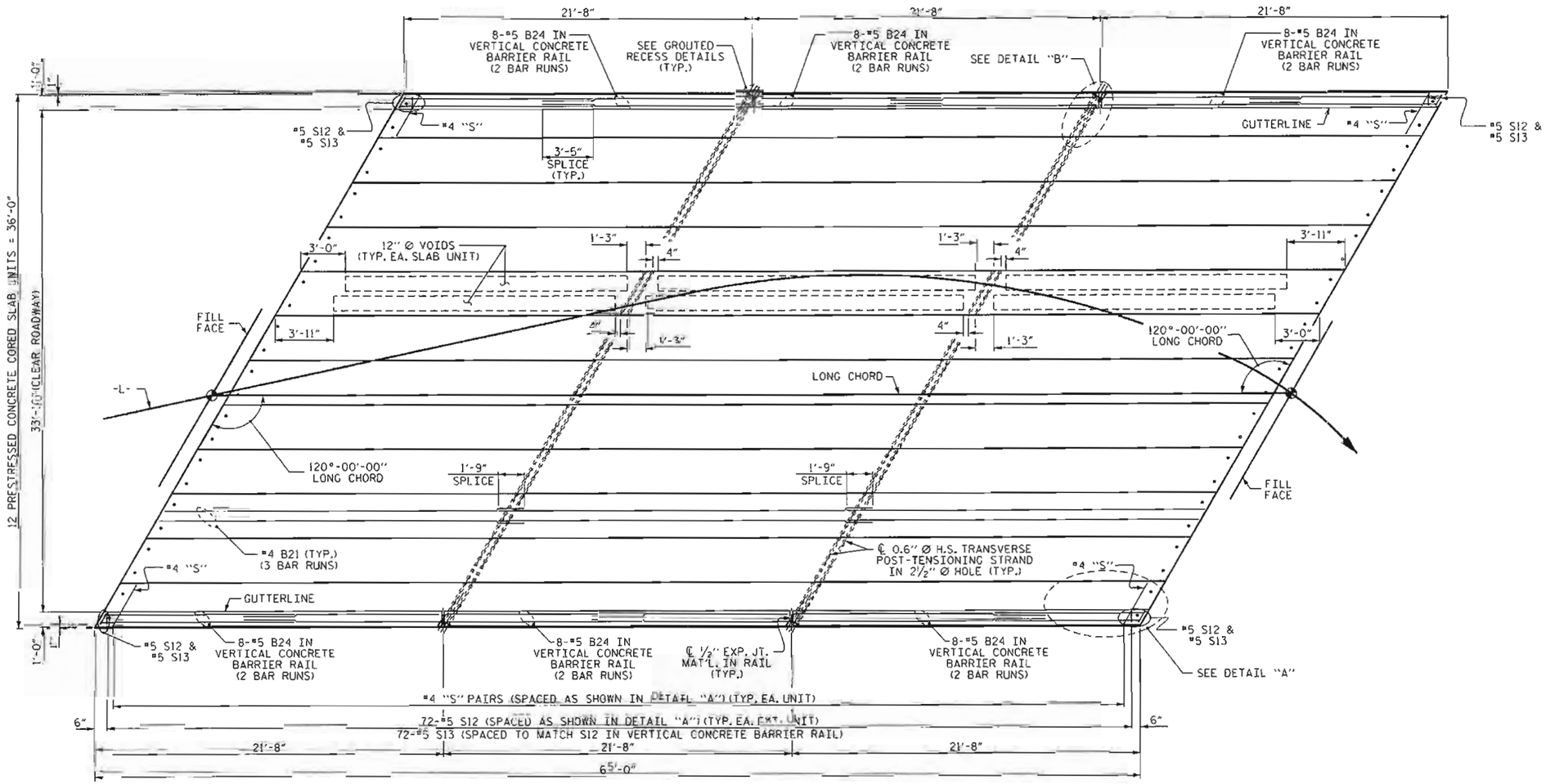

PLAN OF UNIT

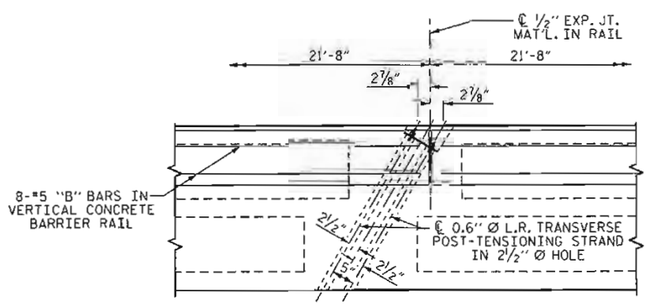

DETAIL "B"

#4 S11 BARS MAY BE SHIFTED AS NECESSARY TO MAINTAIN 1" CLEAR TO GROUTED RECESS AND 2½" Ø TRANSVERSE POST-TENSIONING STRAND HOLES

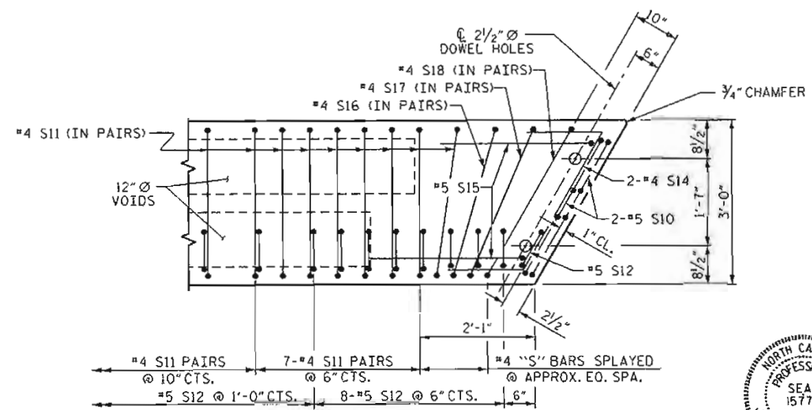

DETAIL "A"

NOTE: EXTERIOR UNIT SHOWN - INTERIOR UNIT SIMILAR EXCEPT OMIT #5 S12 BARS.

NORTH CAROLINA PROFESSIONAL SEAL 15779 ENGINEER JOHN R. DUGGINS, JR.
12/14/11

PROJECT NO. BD-5114B
HENDERSON COUNTY
STATION: 13+00.40 -L-

SHEET 2 OF 3

STATE OF NORTH CAROLINA
DEPARTMENT OF TRANSPORTATION
RALEIGH

PLAN OF 65' UNIT 33'-10" CLEAR ROADWAY 120° SKEW

REVISIONS								SHEET NO.
NO.	BY:	DATE:	NO.	BY:	DATE:			S-6
1			3					TOTAL SHEETS
2			4					16

ASSEMBLED BY :	A. SORSENGINH	DATE :	8/12/2011
CHECKED BY :	H. KIM	DATE :	10/12/2011
DRAWN BY :	MAA	6/10	
CHECKED BY :	MKT	7/10	

14-DEC-2011 11:13
R:\Structures\Final Plans\BD-5114B_S0_S*.dgn
dohodge

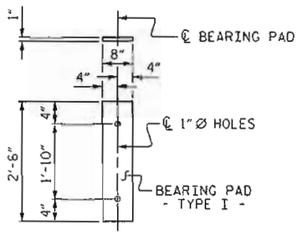

FIXED END
(TYPE I - 24 REQ'D)

ELASTOMERIC BEARING DETAILS

ELASTOMER IN ALL BEARINGS SHALL BE 60 DUROMETER HARDNESS.

GRADE 270 STRANDS	
	0.6"Ø L.R.
AREA (SQUARE INCHES)	0.217
ULTIMATE STRENGTH (LBS. PER STRAND)	58,600
APPLIED PRESTRESS (LBS. PER STRAND)	43,950

CORED SLABS REQUIRED			
	NUMBER	LENGTH	TOTAL LENGTH
65' UNIT			
EXTERIOR C.S.	2	65'-0"	130'-0"
INTERIOR C.S.	10	65'-0"	650'-0"
TOTAL	12		780'-0"

DEAD LOAD DEFLECTION AND CAMBER	
	3'-0" x 2'-0"
65' CORED SLAB UNIT	0.6"Ø L.R. STRAND
CAMBER (SLAB ALONE IN PLACE)	3⅜" ↑
DEFLECTION DUE TO SUPERIMPOSED DEAD LOAD**	½" ↓
FINAL CAMBER	2⅞" ↑

** INCLUDES FUTURE WEARING SURFACE

BAR TYPES

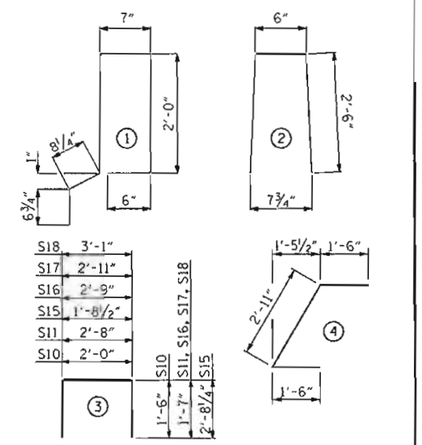

ALL BAR DIMENSIONS ARE OUT TO OUT

NOTES

ALL PRESTRESSING STRANDS SHALL BE 7-WIRE LOW RELAXATION GRADE 270 STRANDS AND SHALL CONFORM TO AASHTO M203 EXCEPT FOR SAMPLING REQUIREMENTS WHICH SHALL BE IN ACCORDANCE WITH THE STANDARD SPECIFICATIONS.

ALL REINFORCING STEEL CAST WITH THE CORED SLAB SECTIONS SHALL BE GRADE 60 AND SHALL BE INCLUDED IN THE UNIT PRICE BID FOR PRESTRESSED CONCRETE CORED SLABS.

RECESSES FOR TRANSVERSE STRANDS SHALL BE GROUTED AFTER THE TENSIONING OF THE STRANDS.

THE 2½"Ø DOWEL HOLES AT FIXED ENDS OF SLAB SECTIONS SHALL BE FILLED WITH GROUT.

THE 2"Ø BACKER ROD SHALL CONFORM TO THE REQUIREMENTS OF TYPE M BOND BREAKER. SEE SECTION 1028 OF THE STANDARD SPECIFICATIONS.

WHEN CORED SLABS ARE CAST, AN INTERNAL HOLD-DOWN SYSTEM SHALL BE EMPLOYED TO PREVENT VOIDS FROM RISING OR MOVING SIDEWAYS. AT LEAST SIX WEEKS PRIOR TO CASTING CORED SLABS, THE CONTRACTOR SHALL SUBMIT TO THE ENGINEER FOR REVIEW AND COMMENT, DETAILED DRAWINGS OF THE PROPOSED HOLD-DOWN SYSTEM. IN ADDITION TO STRUCTURAL DETAILS, LOCATION AND SPACING OF THE HOLD-DOWNS SHALL BE INDICATED.

THE TRANSFER OF LOAD FROM THE ANCHORAGES TO THE CORED SLAB UNIT SHALL BE DONE WHEN THE CONCRETE HAS REACHED A COMPRESSIVE STRENGTH OF NOT LESS THAN THE REQUIRED STRENGTH SHOWN IN THE "CONCRETE RELEASE STRENGTH" TABLE.

ALL REINFORCING STEEL IN VERTICAL CONCRETE BARRIER RAILS SHALL BE EPOXY COATED.

PRESTRESSING STRANDS SHALL BE CUT FLUSH WITH THE CORED SLAB UNIT ENDS.

APPLY EPOXY PROTECTIVE COATING TO CORED SLAB UNIT ENDS.

GROOVED CONTRACTION JOINTS, ½" IN DEPTH, SHALL BE TOOLED IN ALL EXPOSED FACES OF THE BARRIER RAIL AND IN ACCORDANCE WITH ARTICLE 825-10(B) OF THE STANDARD SPECIFICATIONS. A CONTRACTION JOINT SHALL BE LOCATED AT EACH THIRD POINT BETWEEN BARRIER RAIL EXPANSION JOINTS. ONLY ONE CONTRACTION JOINT IS REQUIRED AT MIDPOINT OF BARRIER RAIL SEGMENTS LESS THAN 20 FEET IN LENGTH AND NO CONTRACTION JOINTS ARE REQUIRED FOR THOSE SEGMENTS LESS THAN 10 FEET IN LENGTH.

TRANSVERSE POST TENSIONING OF THE CORED SLAB UNITS SHALL BE DONE IN ACCORDANCE WITH THE STANDARD SPECIFICATIONS.

MAINTAIN A SYMMETRIC TENSION FORCE BETWEEN EACH PAIR OF TRANSVERSE POST TENSIONING STRANDS IN THE DIAPHRAGM.

THE #4 S11 STIRRUPS MAY BE SHIFTED AS NECESSARY TO MAINTAIN 1" CLEAR TO THE GROUTED RECESS.

FOR GROUT FOR STRUCTURES, SEE SPECIAL PROVISIONS.

BILL OF MATERIAL FOR ONE 65' CORED SLAB UNIT							
				EXTERIOR UNIT		INTERIOR UNIT	
BAR	NUMBER	SIZE	TYPE	LENGTH	WEIGHT	LENGTH	WEIGHT
B21	6	#4	STR	22'-10"	92	22'-10"	92
S10	8	#5	3	5'-0"	42	5'-0"	42
S11	158	#4	3	5'-10"	616	5'-10"	616
*S12	74	#5	1	6'-4"	489		
S14	4	#4	4	5'-11"	16	5'-11"	16
S15	4	#5	3	7'-1"	30	7'-1"	30
S16	4	#4	3	5'-11"	16	5'-11"	16
S17	4	#4	3	6'-1"	16	6'-1"	16
S18	4	#4	3	6'-3"	17	6'-3"	17
REINFORCING STEEL			LBS.		845		845
*EPOXY COATED REINFORCING STEEL			LBS.		489		
6000 P.S.I. CONCRETE			CU. YDS.		11.2		11.2
0.6"Ø L.R. STRANDS			No.		24		24

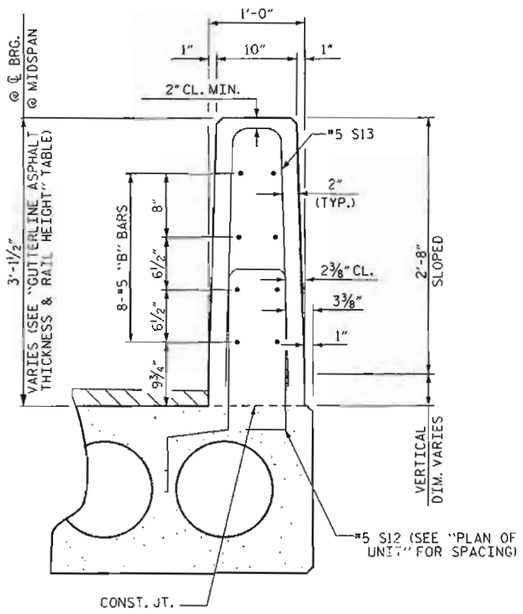

SECTION THRU RAIL

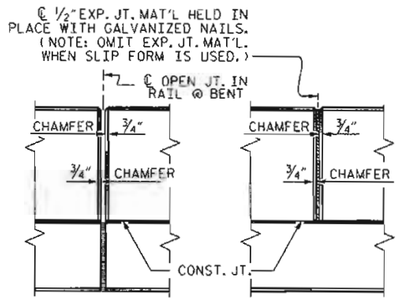

ELEVATION AT EXPANSION JOINTS

VERTICAL CONCRETE BARRIER RAIL DETAILS

BILL OF MATERIAL FOR VERTICAL CONCRETE BARRIER RAIL						
BAR	BARS PER PAIR OF EXTERIOR UNITS	TOTAL NO.	SIZE	TYPE	LENGTH	WEIGHT
	65' UNIT					
*B24	96	96	#5	STR	12'-10"	1285
*S13	148	148	#5	2	5'-6"	849
*EPOXY COATED REINFORCING STEEL				LBS.		2134
CLASS AA CONCRETE				CU.YDS.		13.7
TOTAL VERTICAL CONCRETE BARRIER RAIL				LN. FT.		130.29

GUTTERLINE ASPHALT THICKNESS & RAIL HEIGHT		
	ASPHALT OVERLAY THICKNESS @ MID-SPAN	RAIL HEIGHT @ MID-SPAN
65' UNITS	2⅜"	2'-10⅝"

CONCRETE RELEASE STRENGTH	
UNIT	PSI
65' UNITS	4800

PROJECT NO. BD-5114B
HENDERSON COUNTY
STATION: 13+00.40 -L-

SHEET 3 OF 3

STATE OF NORTH CAROLINA
DEPARTMENT OF TRANSPORTATION
RALEIGH

STANDARD
3'-0" X 2-0"
PRESTRESSED CONCRETE
CORED SLAB UNIT

NORTH CAROLINA PROFESSIONAL SEAL 15779 ENGINEER JOHN R. DUGGINS
12/14/11

REVISIONS								SHEET NO.
NO.	BY:	DATE:	NO.	BY:	DATE:			S-7
1			3					TOTAL SHEETS
2			4					16

ASSEMBLED BY : A. SORSENGINR		DATE : 8/12/2011
CHECKED BY : H. KIM		DATE : 10/12/2011
DRAWN BY : MAA	6/10	
CHECKED BY : MKT	7/10	

14-DEC-2011 11:13
R:\Structures\FinalPlans\BD-5114B_SD_S*.dgn
dchodge

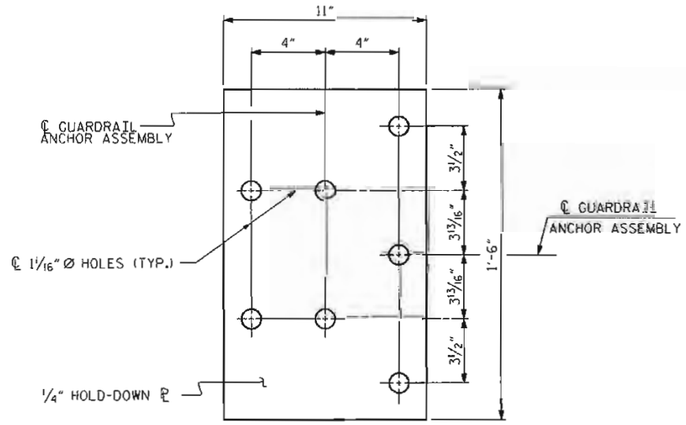

PLAN

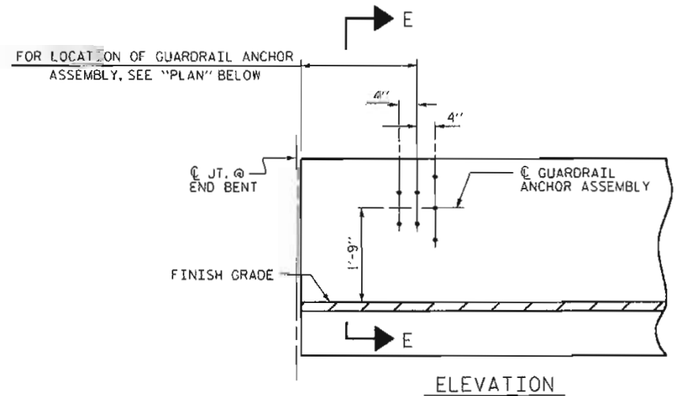

ELEVATION

NOTES

THE GUARDRAIL ANCHOR ASSEMBLY SHALL CONSIST OF A 1/4" HOLD DOWN PLATE AND 7 - 7/8" Ø BOLTS WITH NUTS AND WASHERS.

THE HOLD-DOWN PLATE SHALL CONFORM TO AASHTO M270 GRADE 36. AFTER FABRICATION, THE HOLD-DOWN PLATE SHALL BE HOT-DIP GALVANIZED IN ACCORDANCE WITH AASHTO M111.

BOLTS SHALL CONFORM TO THE REQUIREMENTS OF ASTM A307 AND NUTS SHALL CONFORM TO THE REQUIREMENTS OF AASHTO M291. BOLTS, NUTS AND WASHERS SHALL BE GALVANIZED. (AT THE CONTRACTOR'S OPTION, STAINLESS STEEL BOLTS, NUTS AND WASHERS MAY BE USED AS AN ALTERNATE FOR THE 7/8" Ø GALVANIZED BOLTS, NUTS AND WASHERS. THEY SHALL CONFORM TO OR EXCEED THE MECHANICAL REQUIREMENTS OF ASTM A307. THE USE OF THIS ALTERNATE SHALL BE APPROVED BY THE ENGINEER.)

THE GUARDRAIL ANCHOR ASSEMBLY IS REQUIRED AT ALL POINTS WHERE APPROACH GUARDRAIL IS TO BE ATTACHED TO THE END OF BARRIER RAIL. FOR POINTS OF ATTACHMENT, SEE SKETCH.

AFTER INSTALLATION, THE EXPOSED THREAD OF THE BOLT SHALL BE BURRED WITH A SHARP POINTED TOOL.

THE COST OF THE GUARDRAIL ANCHOR ASSEMBLY SHALL BE INCLUDED IN THE UNIT CONTRACT PRICE BID FOR VERTICAL CONCRETE BARRIER RAIL.

THE VERTICAL REINFORCING BARS MAY BE SHIFTED SLIGHTLY IN THE VERTICAL CONCRETE BARRIER RAIL TO CLEAR ASSEMBLY BOLTS.

THE 1 1/4" Ø HOLES SHALL BE FORMED OR DRILLED WITH A CORE BIT. IMPACT TOOLS WILL NOT BE PERMITTED. ANY CONCRETE DAMAGED BY THIS WORK SHALL BE REPAIRED TO THE SATISFACTION OF THE ENGINEER.

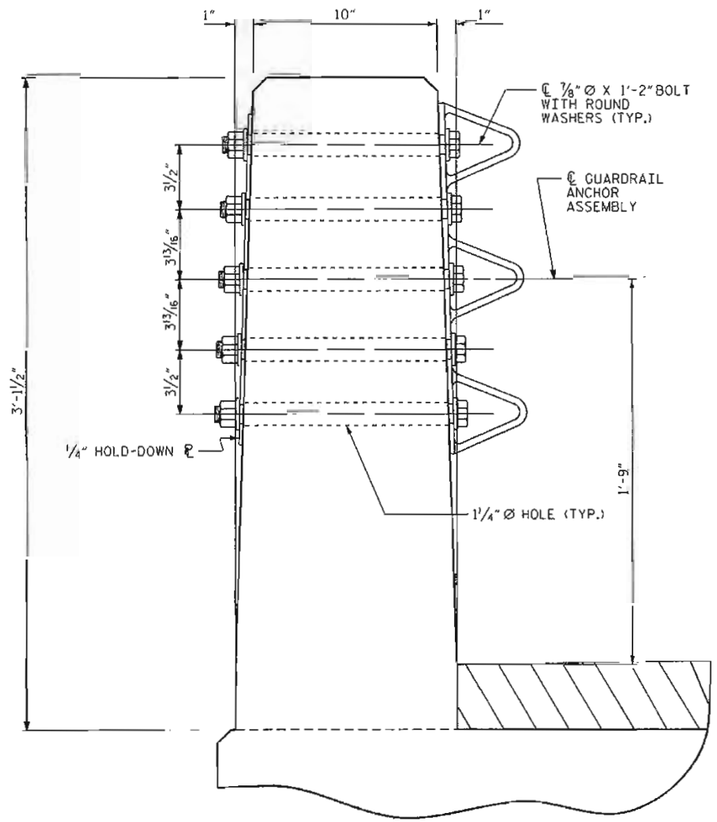

SECTION E-E

GUARDRAIL ANCHOR ASSEMBLY DETAILS

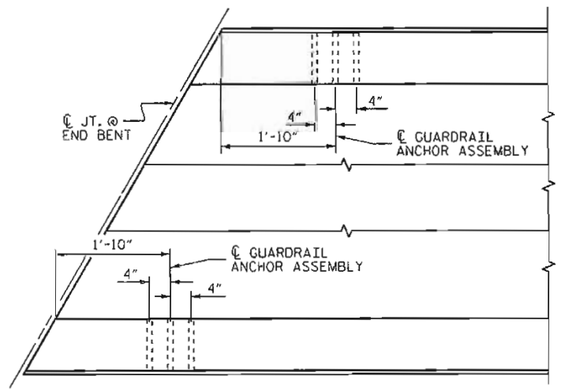

PLAN

LOCATION OF ANCHORS FOR GUARDRAIL

END BENT #1 SHOWN, END BENT #2 SIMILAR.

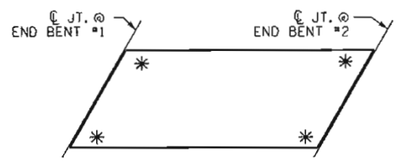

SKETCH SHOWING POINTS OF ATTACHMENT

✳ DENOTES GUARDRAIL ANCHOR ASSEMBLY

PROJECT NO. BD-5114B
HENDERSON COUNTY
STATION: 13+00.40 -L-

STATE OF NORTH CAROLINA
DEPARTMENT OF TRANSPORTATION
RALEIGH

STANDARD
GUARDRAIL ANCHORAGE FOR VERTICAL CONCRETE BARRIER RAIL

NORTH CAROLINA PROFESSIONAL SEAL 15779 ENGINEER JOHN R. DUGGINS, JR.
12/14/11

REVISIONS								SHEET NO.
NO.	BY:	DATE:	NO.	BY:	DATE:			S-8
1			3					TOTAL SHEETS
2			4					16

ASSEMBLED BY :	A. SORSENOINH	DATE :	9/2011
CHECKED BY :	J.R. DUGGINS	DATE :	11/2011
DRAWN BY : MAA 5/10	ADDED 5/6/10		
CHECKED BY : GM 5/10			

14-DEC-2011 11:12
R:\Structures\Final Plans\BD-5114B_SD_GR.dgn
dahodge

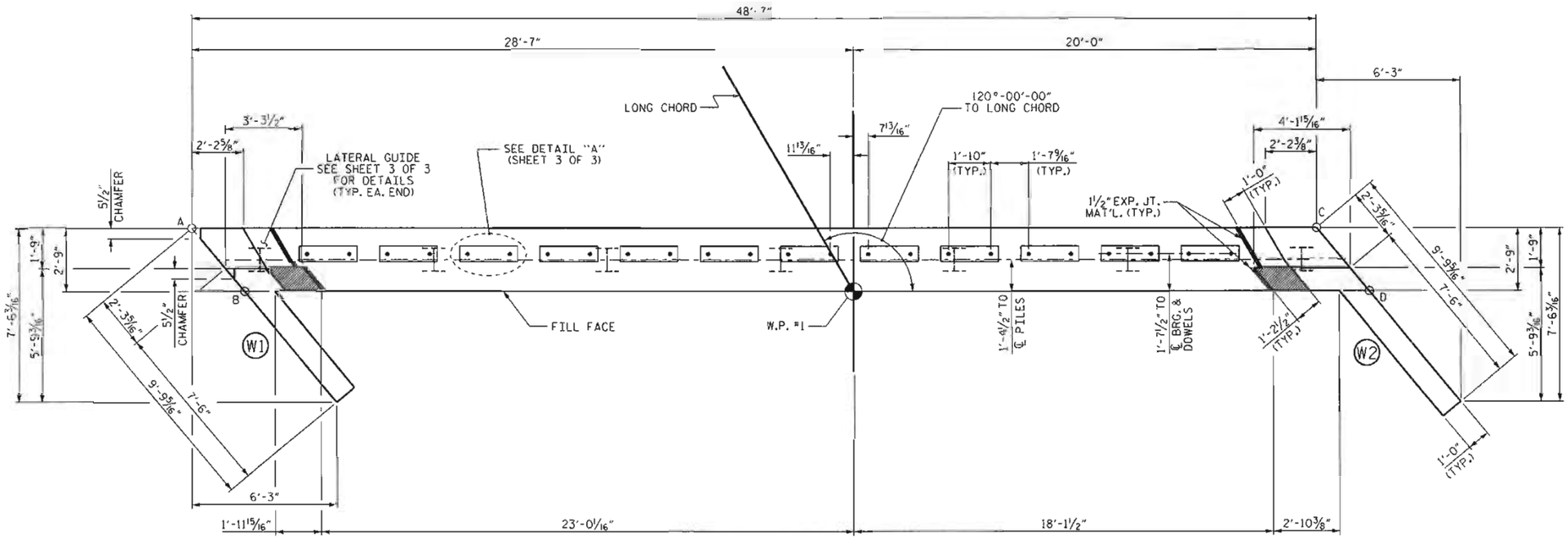

PLAN

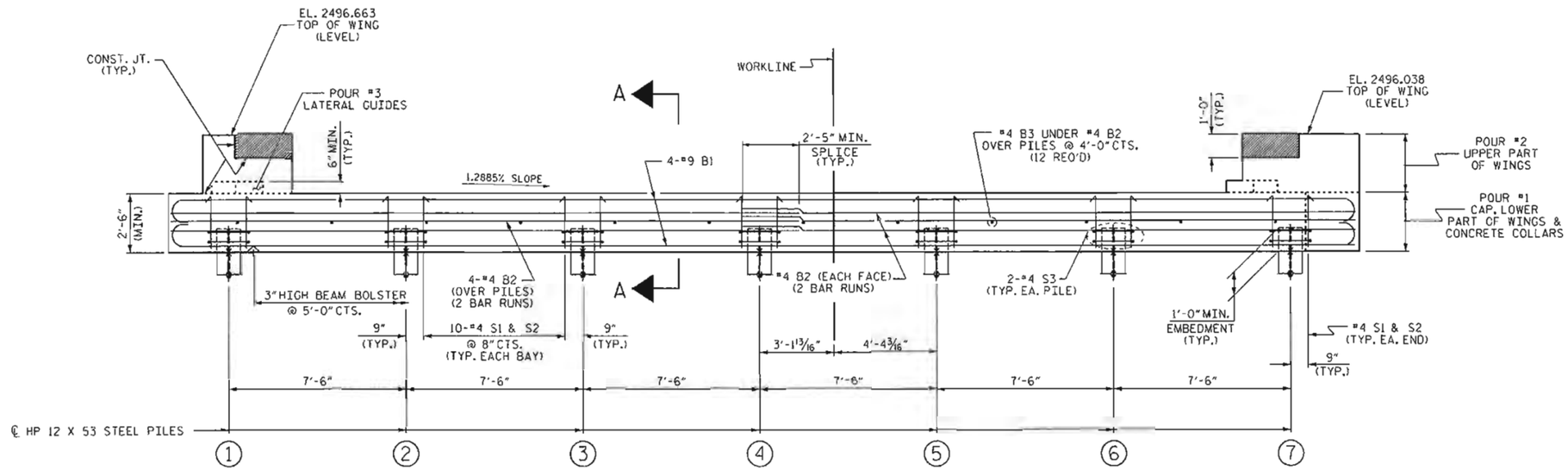

ELEVATION

WINGS NOT SHOWN FOR CLARITY.
FOR SECTION A-A, SEE SHEET 3 OF 3.
CONCRETE COLLARS FOR STEEL PILES NOT SHOWN IN PLAN AND ELEVATION VIEWS FOR CLARITY.
SEE "CORROSION PROTECTION FOR STEEL PILES DETAIL", SHEET 3 OF 3.

NOTES

STIRRUPS IN CAP MAY BE SHIFTED AS NECESSARY TO CLEAR DOWELS.

THE LATERAL GUIDES ARE NOT TO BE POURED UNTIL AFTER THE CORED SLAB UNITS ARE IN PLACE.

THE CONCRETE IN THE SHADED AREA OF THE WING SHALL BE POURED AFTER THE VERTICAL CONCRETE BARRIER RAIL IS CAST IF SLIP FORMING IS USED.

FOR PILE SPLICE DETAILS, SEE SHEET 3 OF 3.

FOR WING DETAILS, SEE SHEET 3 OF 3.

THE CONTRACTOR HAS THE OPTION TO OMIT THE LATERAL GUIDE IF APPROVED BY THE ENGINEER.

ELEVATIONS OF NOTED POINTS		
	TOP OF CAP	BOTTOM OF CAP
POINT A	2493.943	2491.443
POINT B	2493.913	2491.413
POINT C	2493.317	2490.817
POINT D	2493.288	2490.788

TOP OF PILE ELEVATIONS	
1	2492.412
2	2492.315
3	2492.219
4	2492.122
5	2492.025
6	2491.929
7	2491.832

PROJECT NO. BD-5114B
HENDERSON COUNTY
STATION: 13+00.40 -L-

SHEET 1 OF 3

STATE OF NORTH CAROLINA
DEPARTMENT OF TRANSPORTATION
RALEIGH

SUBSTRUCTURE
END BENT No. 1

NORTH CAROLINA PROFESSIONAL SEAL 15779 ENGINEER JOHN R. DUGGINS, JR.
12/14/11

REVISIONS						SHEET NO.
NO.	BY:	DATE:	NO.	BY:	DATE:	S-9
1			3			TOTAL SHEETS
2			4			16

ASSEMBLED BY :	A. SORSENGINH	DATE : 8/12/2011
CHECKED BY :	J.R. DUGGINS	DATE : 11/2011
DRAWN BY : DGE	02/10	
CHECKED BY : MKT	02/10	

14-DEC-2011 11:11
R:\Structures\FinalPlans\BD-5114B_SD_E*.dgn
danodge

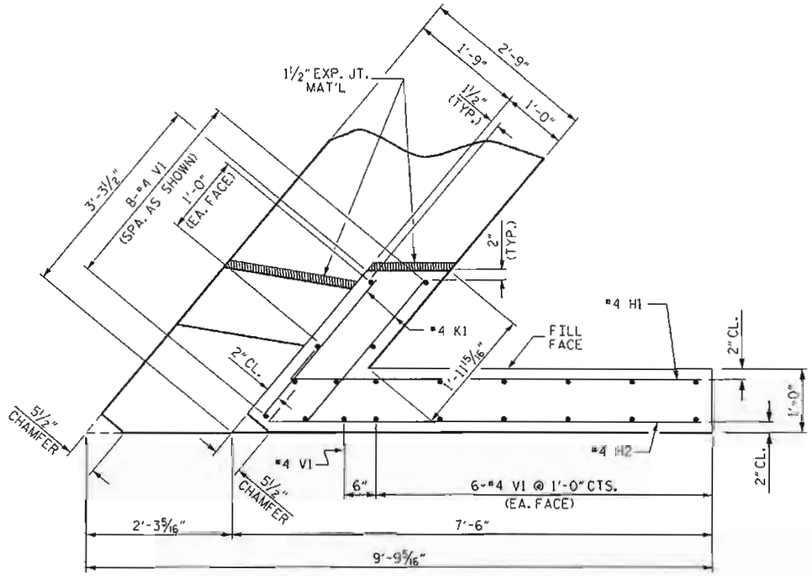

PLAN OF WING (W1)

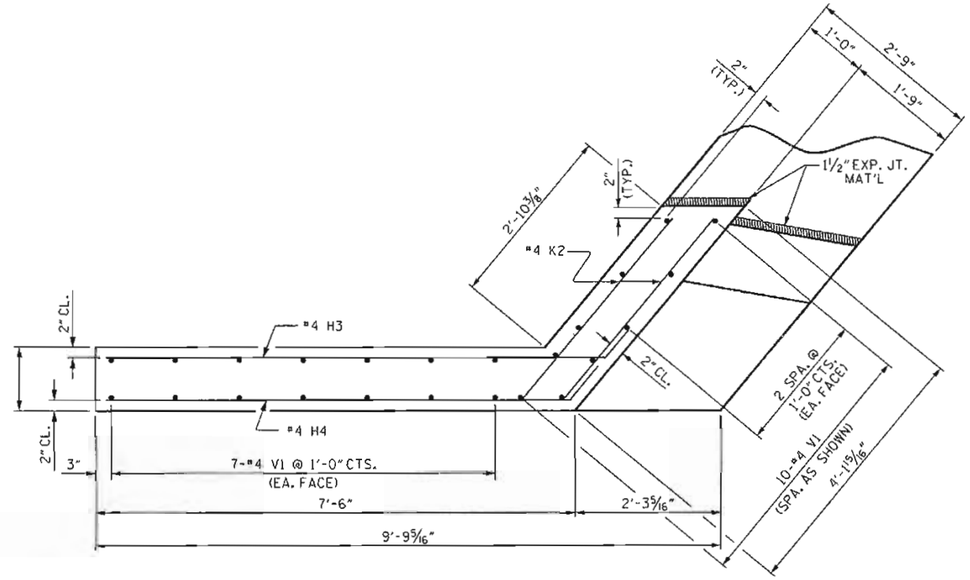

PLAN OF WING (W2)

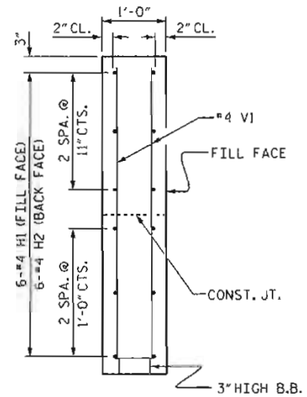

SECTION X-X

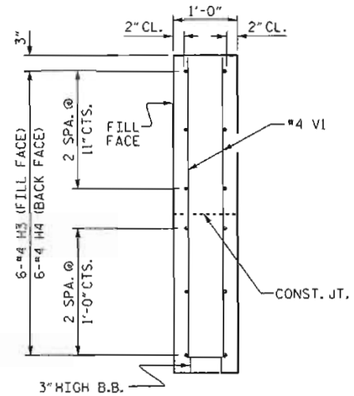

SECTION Y-Y

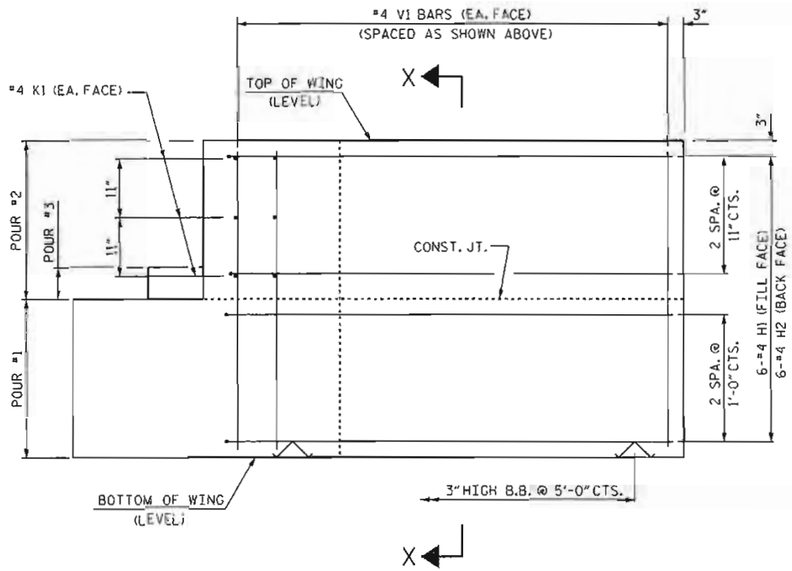

ELEVATION OF WING (W1)

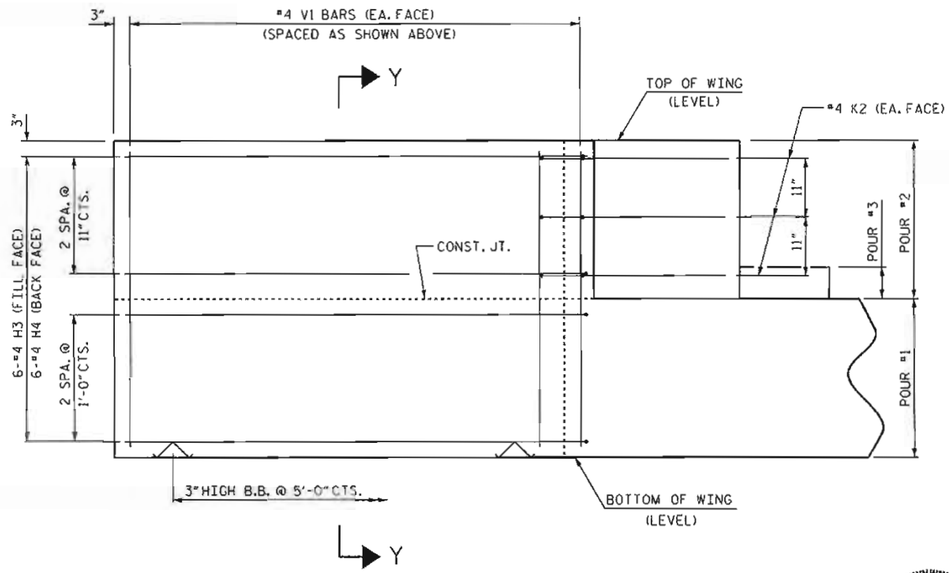

ELEVATION OF WING (W2)

WING DETAILS

PROJECT NO. BD-5114B
HENDERSON COUNTY
STATION: 13+00.40 -L-

SHEET 2 OF 3

STATE OF NORTH CAROLINA
DEPARTMENT OF TRANSPORTATION
RALEIGH

SUBSTRUCTURE
END BENT NO. 1
WING DETAILS

NORTH CAROLINA PROFESSIONAL SEAL 15779 ENGINEER JOHN R. DUGGINS, JR.
12/14/11

ASSEMBLED BY : A. SORSENONH DATE : 8/12/2011	
CHECKED BY : J.R. DUGGINS DATE : 11/2011	
DRAWN BY : DGE 12/09	
CHECKED BY : MKT 01/10	

REVISIONS						SHEET NO.
NO.	BY:	DATE:	NO.	BY:	DATE:	S-10
1			3			TOTAL SHEETS
2			4			16

14-DEC-2011 11:11
R:\Structures\Final Plans\BD-5114B_SD_E*.dgn
dgnodge

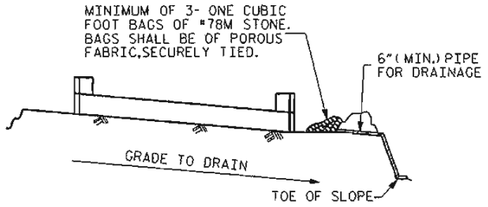

BAGGED STONE AND PIPE SHALL BE PLACED IMMEDIATELY AFTER COMPLETION OF END BENT EXCAVATION. PIPE MAY BE EITHER CONCRETE, CORRUGATED STEEL, CORRUGATED ALUMINUM ALLOY, OR CORRUGATED PLASTIC. PERFORATED PIPE WILL NOT BE ALLOWED.

BAGGED STONE SHALL REMAIN IN PLACE UNTIL THE ENGINEER DIRECTS THAT IT BE REMOVED. THE CONTRACTOR SHALL REMOVE AND DISPOSE OF SILT ACCUMULATIONS AT BAGGED STONE WHEN SO DIRECTED BY THE ENGINEER. BAGS SHALL BE REMOVED AND REPLACED WHENEVER THE ENGINEER DETERMINES THAT THEY HAVE DETERIORATED AND LOST THEIR EFFECTIVENESS.

NO SEPARATE PAYMENT WILL BE MADE FOR THIS WORK AND THE ENTIRE COST OF THIS WORK SHALL BE INCLUDED IN THE UNIT CONTRACT PRICE BID FOR THE SEVERAL PAY ITEMS.

TEMPORARY DRAINAGE AT END BENT

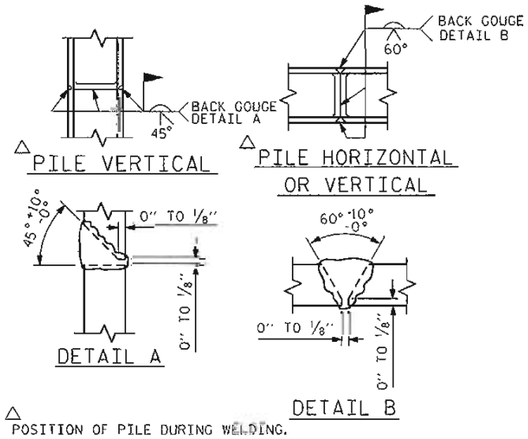

PILE SPLICE DETAILS

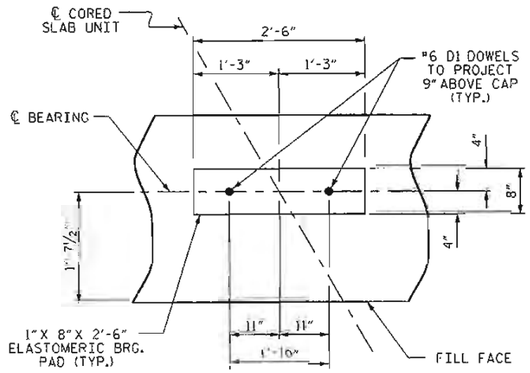

DETAIL "A"

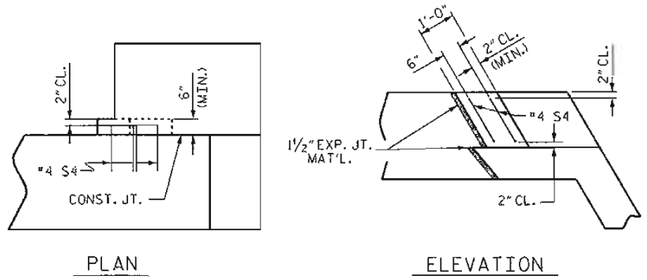

LATERAL GUIDE DETAILS

(END BENT No. 1, RIGHT LATERAL GUIDE SHOWN)

BAR TYPES

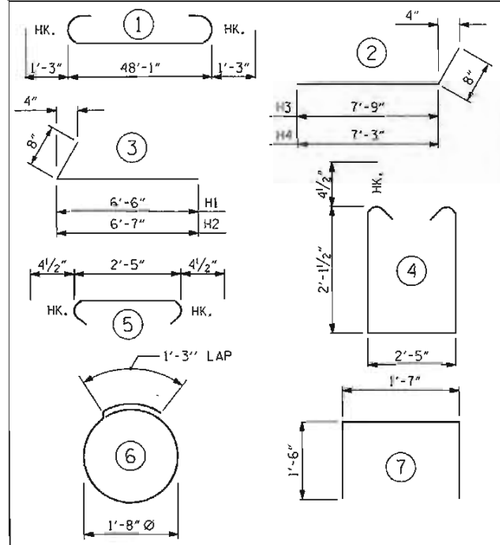

ALL BAR DIMENSIONS ARE OUT TO OUT.

END BENT No. 1
HP 12 X 53 STEEL PILES
NO: 7 LIN. FT.= 90

BILL OF MATERIAL

BAR	NO.	SIZE	TYPE	LENGTH	WEIGHT
B1	8	#9	1	50'-7"	1376
B2	16	#4	STR	25'-4"	271
B3	12	#4	STR	2'-5"	19
D1	24	#6	STR	1'-6"	54
H1	6	#4	3	7'-2"	29
H2	6	#4	3	7'-3"	29
H3	6	#4	2	8'-5"	34
H4	6	#4	2	7'-11"	32
K1	6	#4	STR	2'-9"	11
K2	6	#4	STR	3'-8"	15
S1	62	#4	4	7'-5"	307
S2	62	#4	5	3'-2"	131
S3	14	#4	6	6'-6"	61
S4	4	#4	7	4'-7"	12
V1	45	#4	STR	4'-8"	140
REINFORCING STEEL					2521 LBS.

CLASS A CONCRETE BREAKDOWN (FOR ONE END BENT)

POUR #1	CAP, LOWER PART OF WINGS & COLLARS	14.8 C.Y.
POUR #2	UPPER PART OF WINGS	2.1 C.Y.
POUR #3	LATERAL GUIDES	0.1 C.Y.
TOTAL CLASS A CONCRETE		17.0 C.Y.

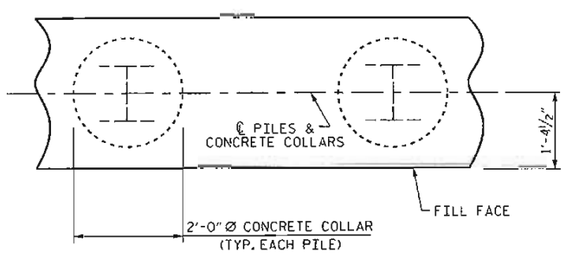

PLAN

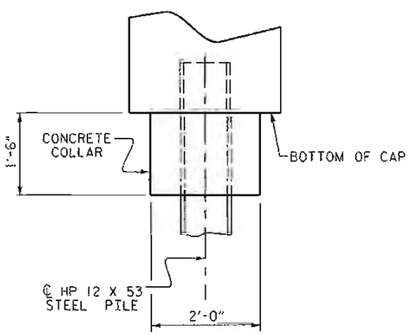

ELEVATION

CORROSION PROTECTION FOR STEEL PILES DETAIL

(END BENT No. 1 SHOWN, END BENT No. 2 SIMILAR BY ROTATION)

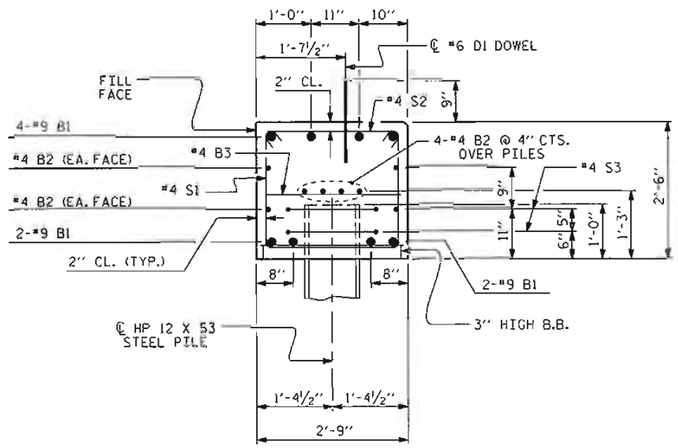

SECTION A-A

(CONCRETE COLLAR NOT SHOWN FOR CLARITY. SEE "CORROSION PROTECTION FOR STEEL PILES DETAIL.")

NORTH CAROLINA PROFESSIONAL SEAL 15779 ENGINEER JOHN R. DUGGINS, JR.
12/14/11

PROJECT NO. BD-5114B
HENDERSON COUNTY
STATION: 13+00.40 -L-

SHEET 3 OF 3

STATE OF NORTH CAROLINA
DEPARTMENT OF TRANSPORTATION
RALEIGH

SUBSTRUCTURE
END BENT No. 1
DETAILS

REVISIONS								SHEET NO.
NO.	BY:	DATE:	NO.	BY:	DATE:	NO.	BY:	DATE:	S-11
1			3						TOTAL SHEETS
2			4						16

ASSEMBLED BY :	A. SORSENOW	DATE :	8/12/2011
CHECKED BY :	J.R. DUGGINS	DATE :	11/2011
DRAWN BY :	OGE	12/09	
CHECKED BY :	MKT	01/10	

14-DEC-2011 11:11
R:\Structures\FinalPlans\BD-5114B_SD_E*.dgn
dahodge

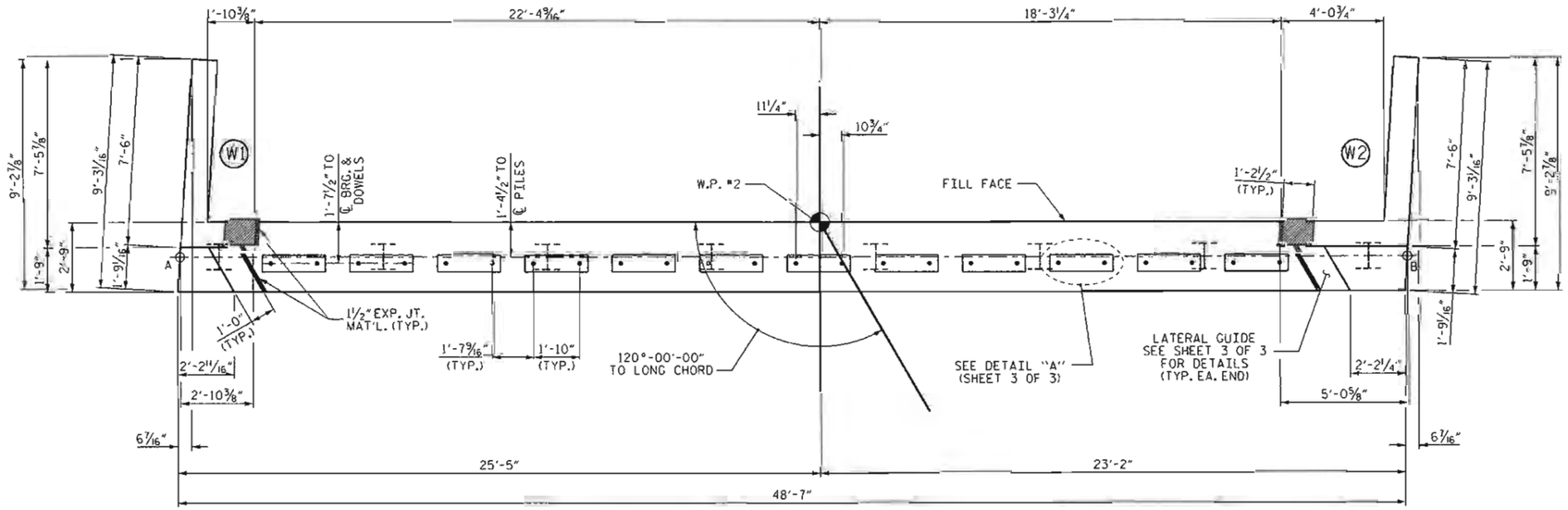

PLAN

NOTES

STIRRUPS IN CAP MAY BE SHIFTED AS NECESSARY TO CLEAR DOWELS.

THE LATERAL GUIDES ARE NOT TO BE POURED UNTIL AFTER THE CORED SLAB UNITS ARE IN PLACE.

THE CONCRETE IN THE SHADED AREA OF THE WING SHALL BE POURED AFTER THE VERTICAL CONCRETE BARRIER RAIL IS CAST IF SLIP FORMING IS USED.

FOR PILE SPLICE DETAILS, SEE SHEET 3 OF 3.

FOR WING DETAILS, SEE SHEET 2 OF 3.

THE CONTRACTOR HAS THE OPTION TO OMIT THE LATERAL GUIDE IF APPROVED BY THE ENGINEER.

ELEVATIONS OF NOTED POINTS		
	TOP OF CAP	BOTTOM OF CAP
POINT A	2493.593	2488.593
POINT B	2492.343	2487.343

TOP OF PILE ELEVATIONS	
1	2490.566
2	2490.399
3	2490.232
4	2490.065
5	2489.898
6	2489.730
7	2489.563
8	2489.396

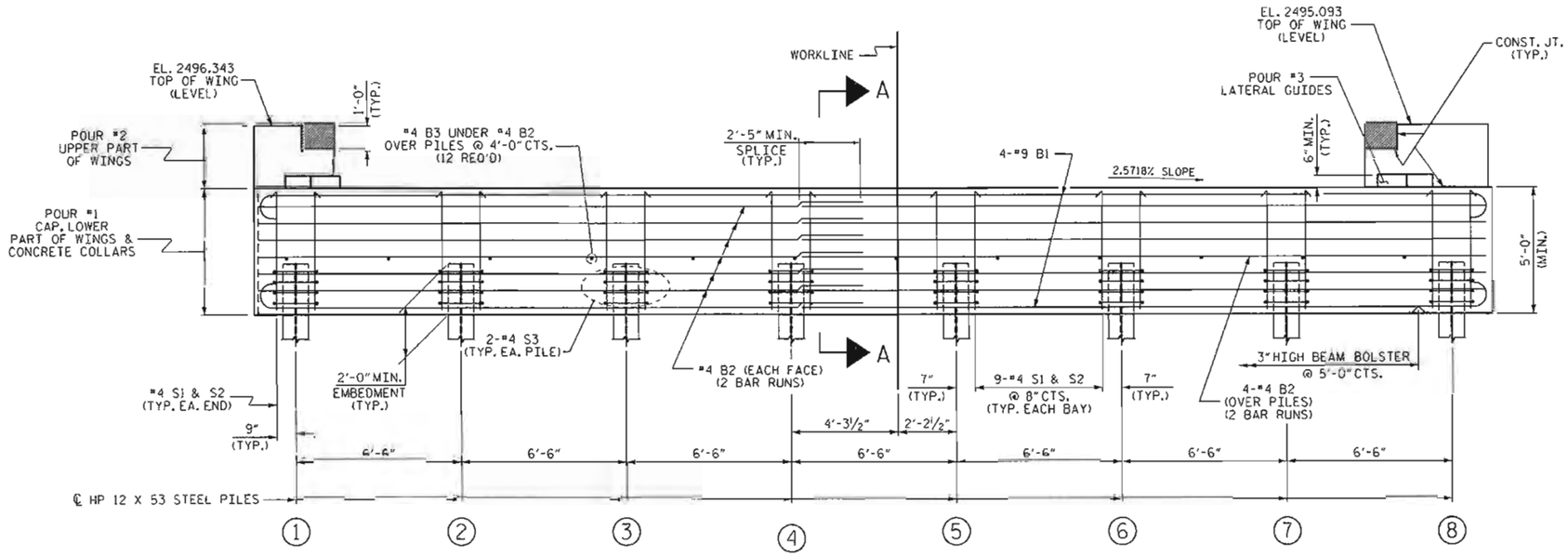

ELEVATION

WINGS NOT SHOWN FOR CLARITY.
FOR SECTION A-A, SEE SHEET 3 OF 3.
CONCRETE COLLARS FOR STEEL PILES NOT SHOWN IN PLAN AND ELEVATION VIEWS FOR CLARITY.
SEE "CORROSION PROTECTION FOR STEEL PILES DETAIL", SHEET 3 OF 3.

PROJECT NO. BD-5114B
HENDERSON COUNTY
STATION: 13+00.40 -L-

SHEET 1 OF 3

STATE OF NORTH CAROLINA
DEPARTMENT OF TRANSPORTATION
RALEIGH

SUBSTRUCTURE
END BENT No. 2

NORTH CAROLINA PROFESSIONAL SEAL 15779 ENGINEER JOHN R. DUGGINS, JR.
12/14/11

ASSEMBLED BY : A. SORSENON	DATE : 8/12/2011
CHECKED BY : J.R. DUGGINS	DATE : 11/2011
DRAWN BY : DGE	02/10
CHECKED BY : MKT	02/10

REVISIONS								SHEET NO.
NO.	BY:	DATE:		NO.	BY:	DATE:		S-12
1				3				TOTAL SHEETS
2				4				16

14-DEC-2011 11:10
R:\Structures\Final Plans\BD-5114B_SD_E*.dgn
dohodge

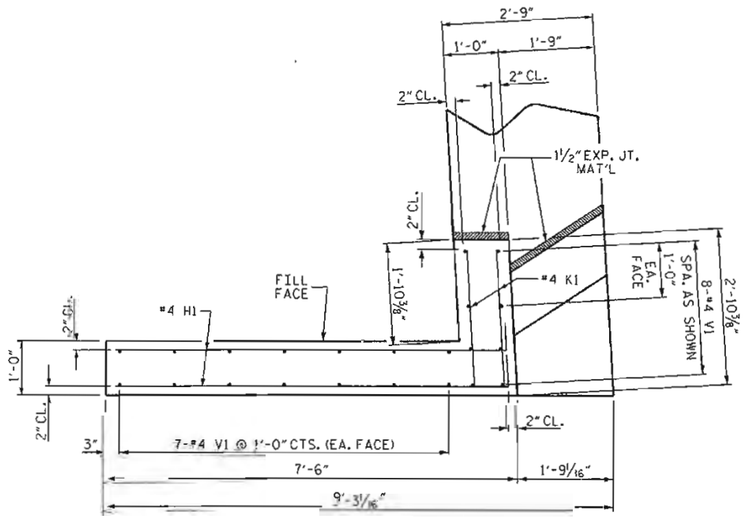

PLAN OF WING (W1)

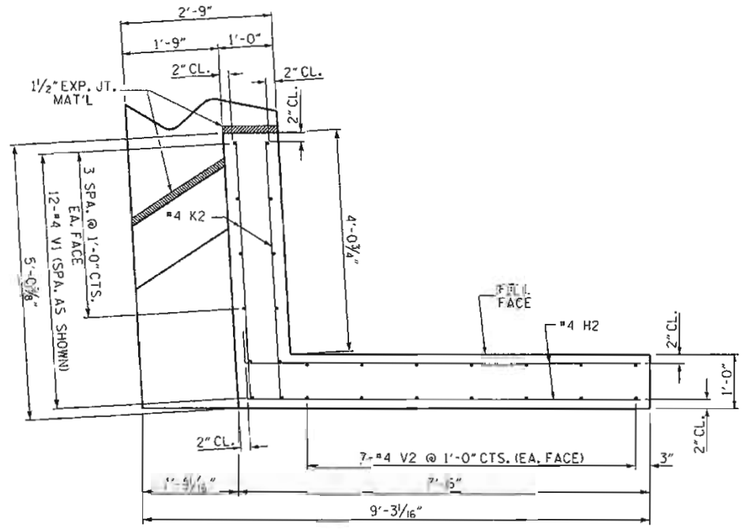

PLAN OF WING (W2)

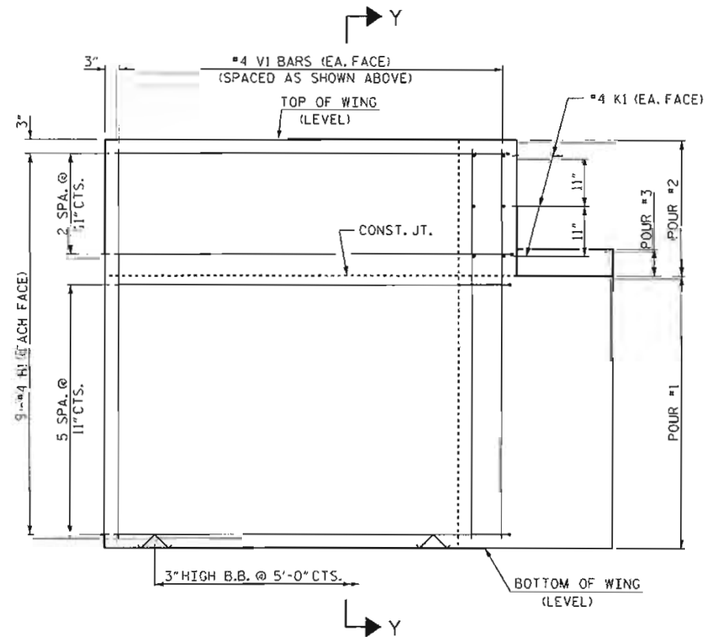

ELEVATION OF WING (W1)

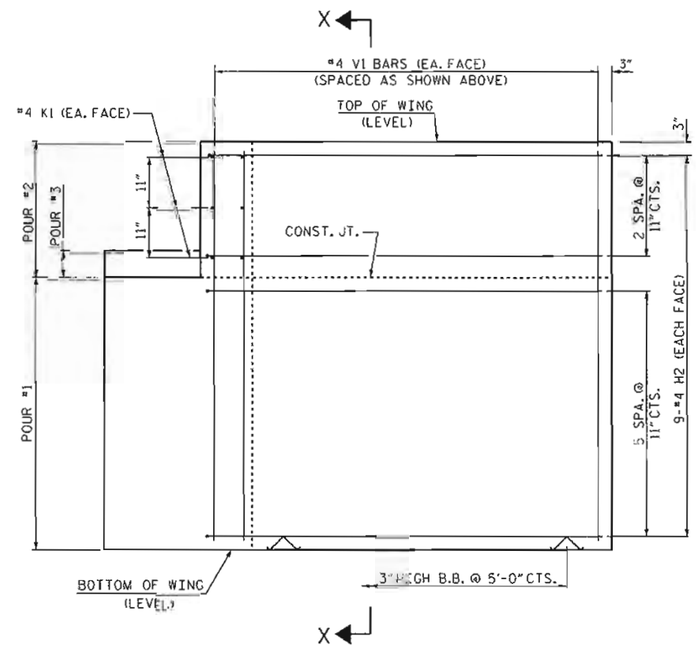

ELEVATION OF WING (W2)

WING DETAILS

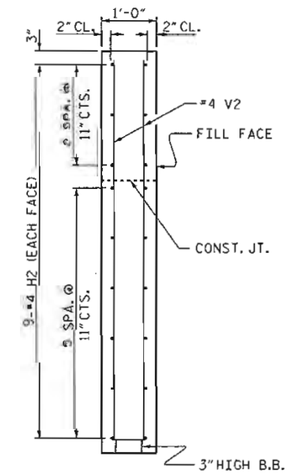

SECTION X-X

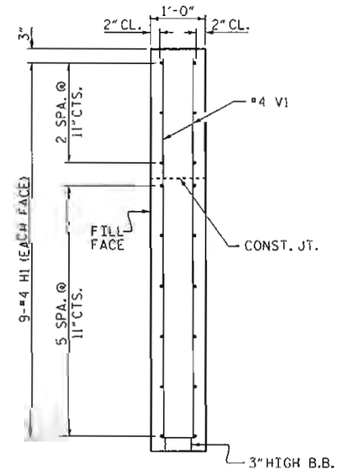

SECTION Y-Y

PROJECT NO. BD-5114B

HENDERSON COUNTY

STATION: 13+00.40 -L-

SHEET 2 OF 3

STATE OF NORTH CAROLINA
DEPARTMENT OF TRANSPORTATION
RALEIGH

SUBSTRUCTURE
END BENT NO. 2
WING DETAILS

NORTH CAROLINA PROFESSIONAL SEAL 15779 ENGINEER JOHN R. DUGGINS, JR.
12/19/11

REVISIONS						SHEET NO.
NO.	BY:	DATE:	NO.	BY:	DATE:	S-13
1			3			TOTAL SHEETS
2			4			16

DRAWN BY : A. SORSENGNH DATE : 8/12/2011
CHECKED BY : J.R. DUGGINS DATE : 8/2011

14-DEC-2011 11:10
R:\Structures\Final Plans\BD-5114B_SD_E*.dgn
dgnodge

NCBDS

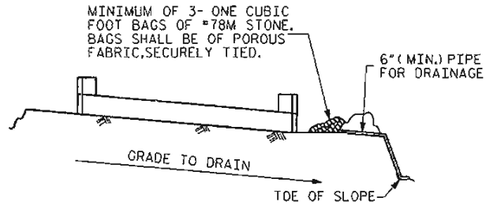

BAGGED STONE AND PIPE SHALL BE PLACED IMMEDIATELY AFTER COMPLETION OF END BENT EXCAVATION. PIPE MAY BE EITHER CONCRETE, CORRUGATED STEEL, CORRUGATED ALUMINUM ALLOY, OR CORRUGATED PLASTIC. PERFORATED PIPE WILL NOT BE ALLOWED.

BAGGED STONE SHALL REMAIN IN PLACE UNTIL THE ENGINEER DIRECTS THAT IT BE REMOVED. THE CONTRACTOR SHALL REMOVE AND DISPOSE OF SILT ACCUMULATIONS AT BAGGED STONE WHEN SO DIRECTED BY THE ENGINEER. BAGS SHALL BE REMOVED AND REPLACED WHENEVER THE ENGINEER DETERMINES THAT THEY HAVE DETERIORATED AND LOST THEIR EFFECTIVENESS.

NO SEPARATE PAYMENT WILL BE MADE FOR THIS WORK AND THE ENTIRE COST OF THIS WORK SHALL BE INCLUDED IN THE UNIT CONTRACT PRICE BID FOR THE SEVERAL PAY ITEMS.

TEMPORARY DRAINAGE AT END BENT

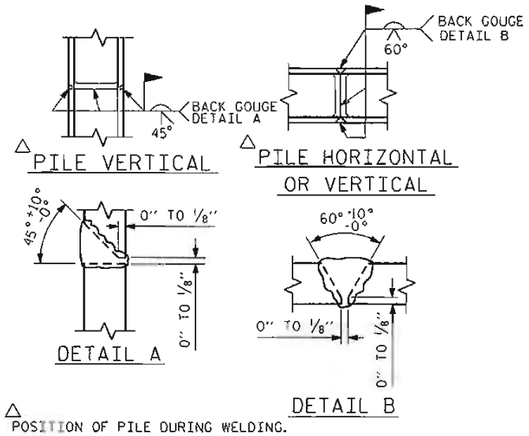

△ POSITION OF PILE DURING WELDING.

PILE SPLICE DETAILS

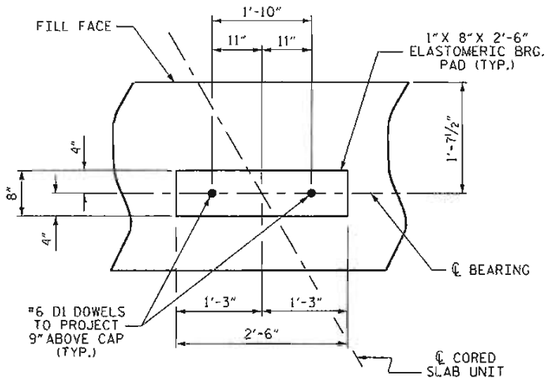

DETAIL "A"

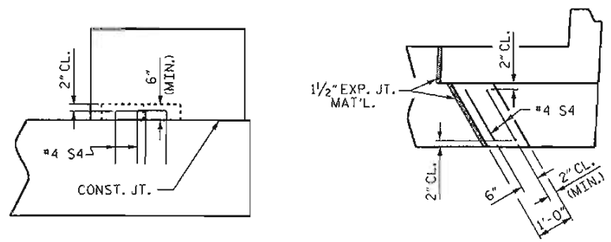

PLAN ELEVATION

LATERAL GUIDE DETAILS

(END BENT No. 2, RIGHT LATERAL GUIDE SHOWN)

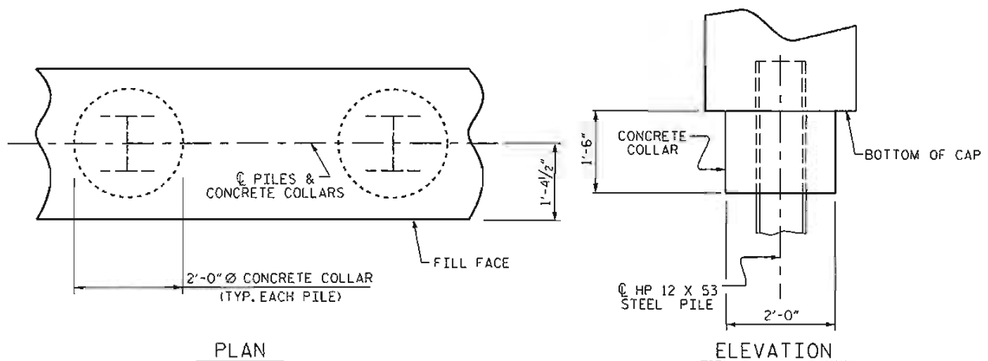

PLAN ELEVATION

CORROSION PROTECTION FOR STEEL PILES DETAIL

(END BENT No. 1 SHOWN, END BENT No. 2 SIMILAR BY ROTATION)

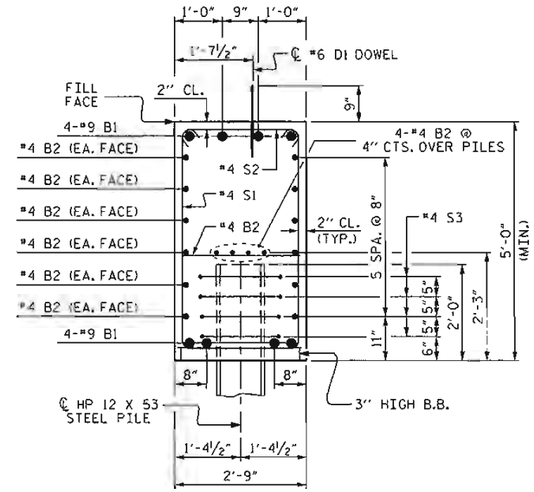

SECTION A-A

(CONCRETE COLLAR NOT SHOWN FOR CLARITY. SEE "CORROSION PROTECTION FOR STEEL PILES DETAIL.")

BAR TYPES

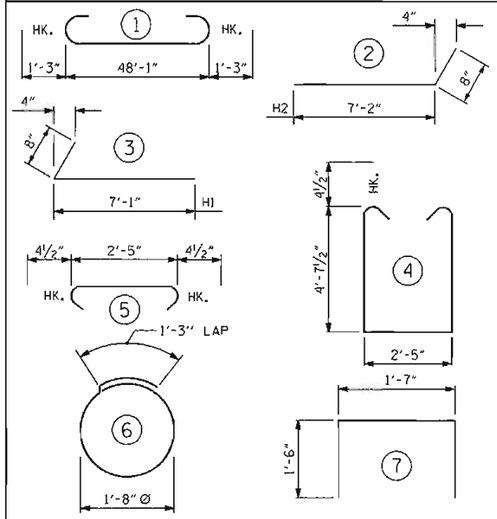

ALL BAR DIMENSIONS ARE OUT TO OUT.

END BENT No. 2
HP 12 X 53 STEEL PILES
NO: 8 LIN. FT.= 160

BILL OF MATERIAL

BAR	NO.	SIZE	TYPE	LENGTH	WEIGHT
B1	8	#9	1	50'-7"	1376
B2	32	#4	STR	25'-4"	541
B3	12	#4	STR	2'-5"	19
D1	24	#6	STR	1'-6"	54
H1	18	#4	3	7'-9"	93
H2	18	#4	2	7'-10"	94
K1	6	#4	STR	2'-6"	10
K2	6	#4	STR	4'-8"	19
S1	62	#4	4	12'-5"	514
S2	62	#4	5	3'-2"	131
S3	32	#4	6	6'-6"	139
S4	4	#4	7	4'-7"	12
V1	48	#4	STR	7'-4"	235

REINFORCING STEEL 3237 LBS.

CLASS A CONCRETE BREAKDOWN (FOR ONE END BENT)

POUR #1	CAP, LOWER PART OF WINGS & COLLARS	28.6 C.Y.
POUR #2	UPPER PART OF WINGS	2.1 C.Y.
POUR #3	LATERAL GUIDES	0.1 C.Y.
TOTAL CLASS A CONCRETE		30.8 C.Y.

PROJECT NO. BD-5114B
HENDERSON COUNTY
STATION: 13+00.40 -L-

SHEET 3 OF 3

STATE OF NORTH CAROLINA
DEPARTMENT OF TRANSPORTATION
RALEIGH

SUBSTRUCTURE
END BENT No. 2
DETAILS

NORTH CAROLINA PROFESSIONAL SEAL 15779 ENGINEER JOHN R. DUGGINS, JR.
12/14/11

REVISIONS								SHEET NO.
NO.	BY:	DATE:	NO.	BY:	DATE:			3-14
1			3					TOTAL SHEETS
2			4					16

ASSEMBLED BY :	A. SORSENGINH	DATE : 8/12/2011
CHECKED BY :	J.R. DUGGINS	DATE : 8/2011
DRAWN BY : DGE	12/09	
CHECKED BY : MKT	01/10	

14-DEC-2011 11:10
R:\Structures\Final Plans\BD-5114B_SD_E*.dgn
dahodge

NOTES

FOR BRIDGE APPROACH FILL INCLUDING GEOTEXTILE, 4"Ø DRAINAGE PIPE, AND #78M STONE BACKFILL, SEE ROADWAY PLANS.

GEOTEXTILE SHALL BE TYPE I IN ACCORDANCE WITH THE STANDARD SPECIFICATIONS SECTION 1056.

#78M STONE BACKFILL (CLASS V SELECT MATERIAL) SHALL BE IN ACCORDANCE WITH STANDARD SPECIFICATIONS SECTION 1016.

#78M STONE BACKFILL IS TO BE CONTINUOUS ALONG FILL FACE OF BACKWALL FROM OUTSIDE EDGE TO OUTSIDE EDGE OF APPROACH SLAB.

FOR THE 4"Ø DRAINAGE PIPE OUTLET(S), SEE ROADWAY STANDARD DRAWINGS.

AREA BETWEEN THE WINGWALL AND APPROACH SLAB SHALL BE GRADED TO DRAIN THE WATER AWAY FROM THE FILL FACE OF THE BRIDGE AND SHALL BE PAVED. SEE ROADWAY PLANS.

FOR JOINT DETAILS, SEE "PRESTRESSED CONCRETE CORED SLAB UNIT" SHEETS.

THE JOINT AT THE END BENT SHALL BE GROUTED AS SOON AS PRACTICAL AFTER THE CONSTRUCTION OF THE APPROACH SLABS.

THE CONTRACTOR HAS THE OPTION TO OMIT GROUT BETWEEN THE APPROACH SLAB AND THE CORED SLAB UNITS AND POUR THE APPROACH SLAB DIRECTLY AGAINST THE CORED SLAB UNITS. SEE "OPTIONAL JOINT DETAIL".

APPROACH SLAB GROOVING IS NOT REQUIRED.

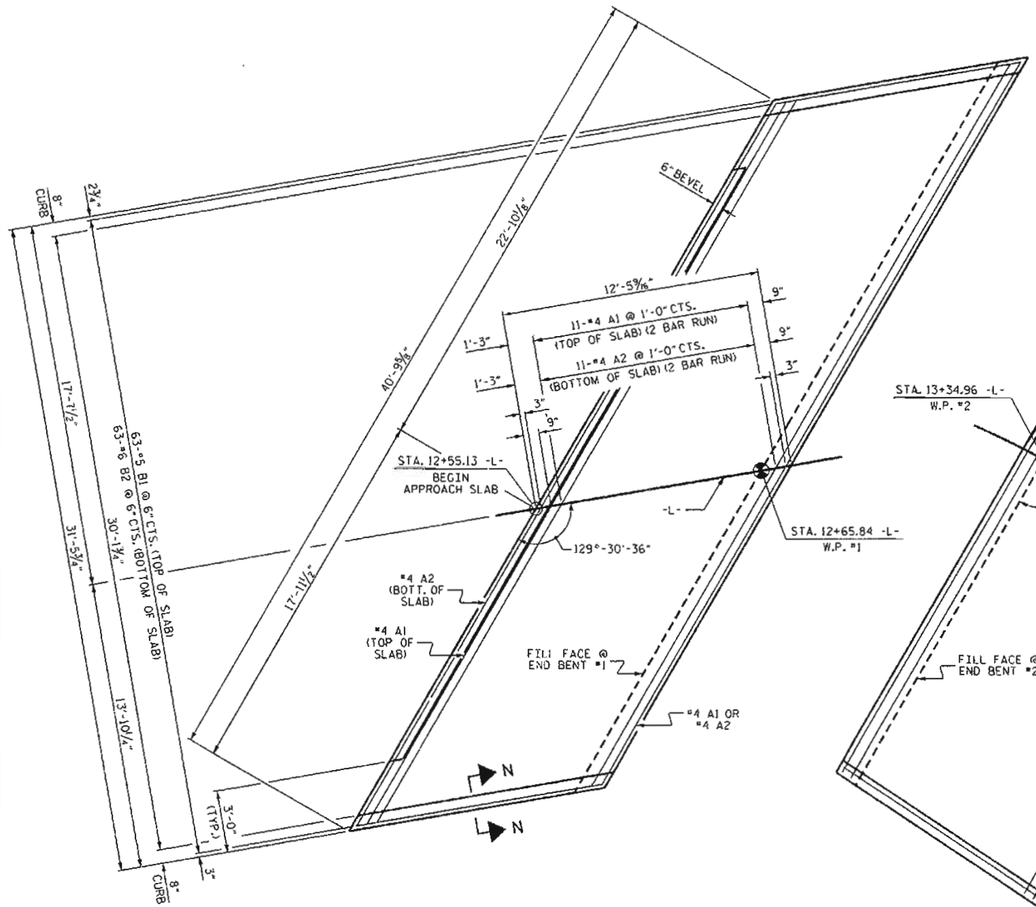

PLAN @ END BENT #1

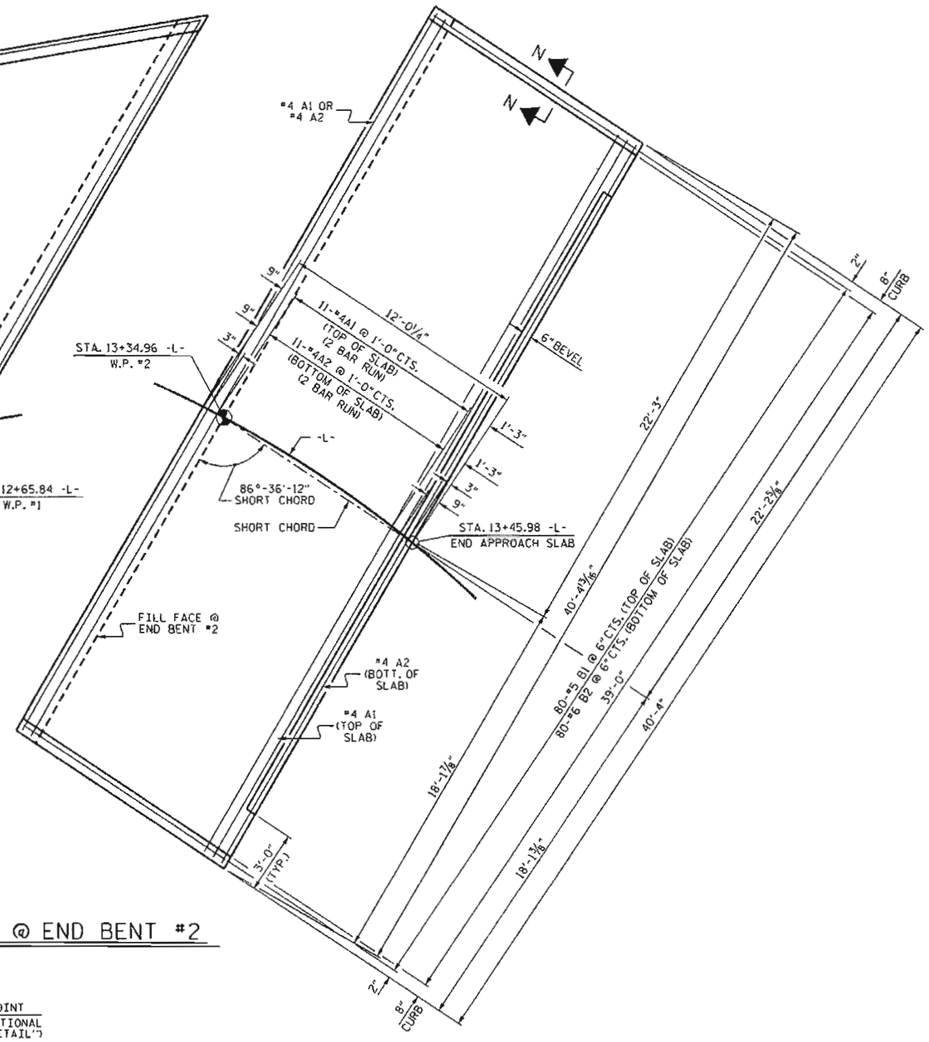

PLAN @ END BENT #2

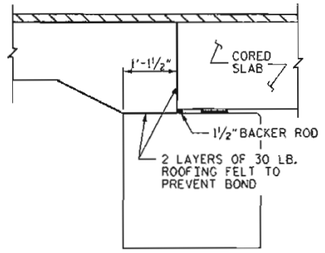

OPTIONAL JOINT DETAIL

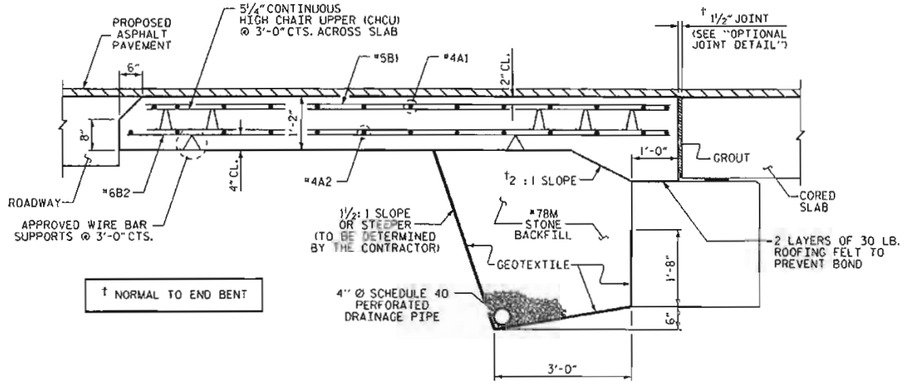

SECTION THRU SLAB

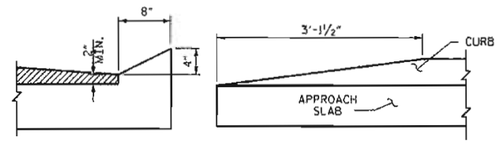

SECTION N-N

END OF CURB WITHOUT SHOULDER BERM GUTTER

CURB DETAILS

BRIDGE NO. BD-5114B

HENDERSON COUNTY

STATION: 13+00.40 -L-

SHEET 1 OF 2

STATE OF NORTH CAROLINA
DEPARTMENT OF TRANSPORTATION
RALEIGH

STANDARD
BRIDGE APPROACH SLAB
FOR PRESTRESSED CONCRETE
CORED SLAB UNIT
(SUB-REGIONAL TIER)
120° SKEW

NORTH CAROLINA PROFESSIONAL SEAL 15779 ENGINEER JOHN R. DUGGINS

12/14/11

REVISIONS								SHEET NO.
NO.	BY:	DATE:	NO.	BY:	DATE:			S-15
1			3					TOTAL SHEETS
2			4					16

ASSEMBLED BY :	A. SORSENGINH	DATE :	8/12/2011
CHECKED BY :	J.R. DUGGINS	DATE :	11/2011
DRAWN BY : SHS/MAA 5-09			
CHECKED BY : BCH 5-09			

14-DEC-2011 11:09
R:\Structures\Final Plans\BD-5114B_SD_AS.dgn
cahodge

SPLICE LENGTHS		
BAR SIZE	EPOXY COATED	UNCOATED
#4	2'-0"	1'-9"
#5	2'-6"	2'-2"
#6	3'-10"	2'-7"

BILL OF MATERIAL

APPROACH SLAB AT EB #1

BAR	NO.	SIZE	TYPE	LENGTH	WEIGHT
* A1	26	#4	STR	21'-2"	368
A2	26	#4	STR	21'-1"	366
* B1	63	#5	STR	11'-1"	728
B2	63	#6	STR	11'-7"	1096
REINFORCING STEEL				LBS.	1462
* EPOXY COATED REINFORCING STEEL				LBS.	1096
CLASS AA CONCRETE				C. Y.	19.0

APPROACH SLAB AT EB #2

BAR	NO.	SIZE	TYPE	LENGTH	WEIGHT
* A1	26	#4	STR	21'-1"	365
A2	26	#4	STR	20'-11"	363
* B1	81	#5	STR	11'-1"	936
B2	81	#6	STR	11'-7"	1409
REINFORCING STEEL				LBS.	1772
* EPOXY COATED REINFORCING STEEL				LBS.	1301
CLASS AA CONCRETE				C. Y.	24.1

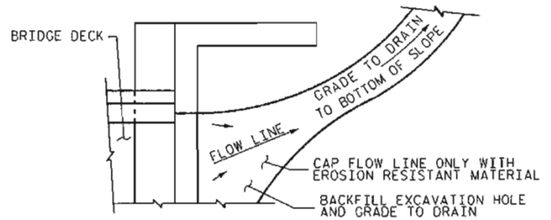

IF THE APPROACH SLAB IS NOT CONSTRUCTED IMMEDIATELY AFTER THE BACKFILLING OF THE END BENT EXCAVATION, GRADE TO DRAIN TO THE BOTTOM OF THE SLOPE AND PROVIDE EROSION RESISTANT MATERIAL, SUCH AS FIBERGLASS ROVING OR AS DIRECTED BY THE ENGINEER TO PREVENT SOIL EROSION AND TO PROTECT THE AREA ADJACENT TO THE STRUCTURE. THE CONTRACTOR WILL BE REQUIRED TO REMOVE THESE MATERIALS PRIOR TO CONSTRUCTION OF THE APPROACH SLAB.

TEMPORARY DRAINAGE DETAIL

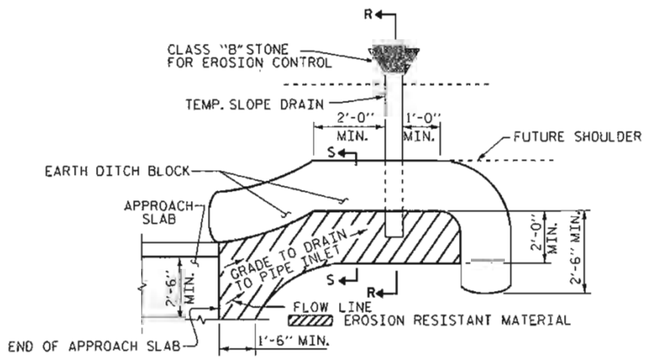

NOTE: IMMEDIATELY AFTER THE CONSTRUCTION OF THE APPROACH SLAB, THE CONTRACTOR SHALL PROVIDE TEMPORARY BERM AND SLOPE DRAIN. CONTRACTOR SHALL GRADE TO PIPE INLET AND PROVIDE EROSION RESISTANT MATERIAL AS SHOWN. THE EROSION RESISTANT MATERIAL SHALL BE EITHER 1) ASPHALT PLANT MIX, TYPE 1 OR TYPE 2, MIN. 2" DEPTH, 2) EROSION CONTROL MAT, OR 3) CONCRETE, AS DIRECTED BY THE ENGINEER. THE SLOPE DRAIN SHALL CONSIST OF A NON-PERFORATED TEMPORARY DRAINAGE PIPE, 12 INCHES IN DIAMETER.

PLAN VIEW

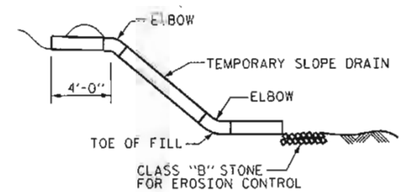

SECTION R-R

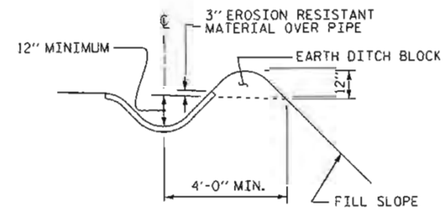

SECTION S-S

TEMPORARY BERM AND SLOPE DRAIN DETAILS

PROJECT NO. BD-5114B
HENDERSON COUNTY
STATION: 13+00.40 -L-

SHEET 2 OF 2

STATE OF NORTH CAROLINA
DEPARTMENT OF TRANSPORTATION
RALEIGH

BRIDGE APPROACH SLAB DETAILS

NORTH CAROLINA PROFESSIONAL SEAL 15779 ENGINEER JOHN R. DUGGINS, JR.
12/14/11

REVISIONS							SHEET NO.
NO.	BY:	DATE:	NO.	BY:	DATE:		S-16
1			3				TOTAL SHEETS
2			4				16

ASSEMBLED BY : A. SORSENGINH	DATE : 8/2011		
CHECKED BY : J.R. DUGGINS	DATE : 11/2011		
DRAWN BY : FCJ 11/88	REV. 8/16/99	MAB/LES	
CHECKED BY : ARB 11/88	REV. 10/17/00	RWW/LES	
	REV. 5/7/03	RWW/JTE	

14-DEC-2011 11:08
R:\Structures\Final Plans\BD-5114B_SD_A5.dgn
dahodge

STANDARD NOTES

DESIGN DATA:

SPECIFICATIONS	A.A.S.H.T.O. (CURRENT)
LIVE LOAD	SEE PLANS
IMPACT ALLOWANCE	SEE A.A.S.H.T.O.
STRESS IN EXTREME FIBER OF	
STRUCTURAL STEEL - AASHTO M270 GRADE 36	20,000 LBS. PER SQ. IN.
- AASHTO M270 GRADE 50W	27,000 LBS. PER SQ. IN.
- AASHTO M270 GRADE 50	27,000 LBS. PER SQ. IN.
REINFORCING STEEL IN TENSION	
GRADE 60	24,000 LBS. PER SQ. IN.
CONCRETE IN COMPRESSION	1,200 LBS. PER SQ. IN.
CONCRETE IN SHEAR	SEE A.A.S.H.T.O.
STRUCTURAL TIMBER - TREATED OR	
UNTREATED - EXTREME FIBER STRESS	1,800 LBS. PER SQ. IN.
COMPRESSION PERPENDICULAR TO GRAIN OF TIMBER	375 LBS. PER SQ. IN.
EQUIVALENT FLUID PRESSURE OF EARTH	30 LBS. PER CU. FT. (MINIMUM)

MATERIAL AND WORKMANSHIP:

EXCEPT AS MAY OTHERWISE BE SPECIFIED ON PLANS OR IN THE SPECIAL PROVISIONS, ALL MATERIAL AND WORKMANSHIP SHALL BE IN ACCORDANCE WITH THE 2012 "STANDARD SPECIFICATIONS FOR ROADS AND STRUCTURES" OF THE N. C. DEPARTMENT OF TRANSPORTATION.

STEEL SHEET PILING FOR PERMANENT OR TEMPORARY APPLICATIONS SHALL BE HOT ROLLED.

CONCRETE:

UNLESS OTHERWISE REQUIRED ON PLANS, CLASS A CONCRETE SHALL BE USED FOR ALL PORTIONS OF ALL STRUCTURES WITH THE EXCEPTION THAT: CLASS AA CONCRETE SHALL BE USED IN BRIDGE SUPERSTRUCTURES, ABUTMENT BACKWALLS, AND APPROACH SLABS; AND CLASS B CONCRETE SHALL BE USED FOR SLOPE PROTECTION AND RIP RAP.

CONCRETE CHAMFERS:

UNLESS OTHERWISE NOTED ON THE PLANS, ALL EXPOSED CORNERS ON STRUCTURES SHALL BE CHAMFERED 3/4" WITH THE FOLLOWING EXCEPTIONS: TOP CORNERS OF CURBS MAY BE ROUNDED TO 1-1/2" RADIUS WHICH IS BUILT INTO CURB FORMS; CORNERS OF TRANSVERSE FLOOR EXPANSION JOINTS SHALL BE ROUNDED WITH A 1/4" FINISHING TOOL UNLESS OTHERWISE REQUIRED ON PLANS; AND CORNERS OF EXPANSION JOINTS IN THE ROADWAY FACES AND TOPS OF CURBS AND SIDEWALKS SHALL BE ROUNDED TO A 1/4" RADIUS WITH A FINISHING STONE OR TOOL UNLESS OTHERWISE REQUIRED ON PLANS.

DOWELS:

DOWELS WHEN INDICATED ON PLANS AS FOR CULVERT EXTENSIONS, SHALL BE EMBEDDED AT LEAST 12" INTO THE OLD CONCRETE AND GROUTED INTO PLACE WITH 1:2 CEMENT MORTAR.

ALLOWANCE FOR DEAD LOAD DEFLECTION, SETTLEMENT, ETC. IN CASTING SUPERSTRUCTURES:

BRIDGES SHALL BE BUILT ON THE GRADE OR VERTICAL CURVE SHOWN ON PLANS. SLABS, CURBS AND PARAPETS SHALL CONFORM TO THE GRADE OR CURVE.

ALL DIMENSIONS WHICH ARE GIVEN IN SECTION AND ARE AFFECTED BY DEAD LOAD DEFLECTIONS ARE DIMENSIONS AT CENTER LINE OF BEARING UNLESS OTHERWISE NOTED ON PLANS. IN SETTING FORMS FOR STEEL BEAM BRIDGES AND PRESTRESSED CONCRETE CIRDER BRIDGES, ADJUSTMENTS SHALL BE MADE DUE TO THE DEAD LOAD DEFLECTIONS FOR THE ELEVATIONS SHOWN. WHERE BLOCKS ARE SHOWN OVER BEAMS FOR BUILDING UP TO THE SLAB, THE VERTICAL DIMENSIONS OF THE BLOCKS SHALL BE ADJUSTED BETWEEN BEARINGS TO COMPENSATE FOR DEAD LOAD DEFLECTIONS. VERTICAL CURVE ORDINATE, AND ACTUAL BEAM CAMBER. WHERE BOTTOM OF SLAB IS IN LINE WITH BOTTOM OF TOP FLANGES, DEPTH OF SLAB BETWEEN BEARINGS SHALL BE ADJUSTED TO COMPENSATE FOR DEAD LOAD DEFLECTION, VERTICAL CURVE ORDINATE, AND ACTUAL BEAM CAMBER.

IN SETTING FALSEWORK AND FORMS FOR REINFORCED CONCRETE SPANS, AN ALLOWANCE SHALL BE MADE FOR DEAD LOAD DEFLECTIONS, SETTLEMENT OF FALSEWORK, AND PERMANENT CAMBER WHICH SHALL BE PROVIDED FOR IN ADDITION TO THE ELEVATIONS SHOWN. AFTER REMOVAL OF THE FALSEWORK, THE FINISHED STRUCTURES SHALL CONFORM TO THE PROFILE AND ELEVATIONS SHOWN ON THE PLANS AND CONSTRUCTION ELEVATIONS FURNISHED BY THE ENGINEER.

DETAILED DRAWINGS FOR FALSEWORK OR FORMS FOR BRIDGE SUPERSTRUCTURE AND ANY STRUCTURE OR PARTS OF A STRUCTURE AS NOTED ON THE PLANS SHALL BE SUBMITTED TO THE ENGINEER FOR APPROVAL BEFORE CONSTRUCTION OF THE FALSEWORK OR FORMS IS STARTED.

REINFORCING STEEL:

ALL REINFORCING STEEL SHALL BE DEFORMED. DIMENSIONS RELATIVE TO PLACEMENT OF REINFORCING ARE TO CENTERS OF BARS UNLESS OTHERWISE INDICATED IN THE PLANS. DIMENSIONS ON BAR DETAILS ARE TO CENTERS OF BARS OR ARE OUT TO OUT AS INDICATED ON PLANS.

WIRE BAR SUPPORTS SHALL BE PROVIDED FOR REINFORCING STEEL WHERE INDICATED ON THE PLANS. WHEN BAR SUPPORT PIECES ARE PLACED IN CONTINUOUS LINES, THEY SHALL BE SO PLACED THAT THE ENDS OF THE SUPPORTING WIRES SHALL BE LAPPED TO LOCK LEGS ON ADJOINING PIECES.

STRUCTURAL STEEL:

AT THE CONTRACTOR'S OPTION, HE MAY SUBSTITUTE 7/8" Ø SHEAR STUDS FOR THE ¾" Ø STUDS SPECIFIED ON THE PLANS. THIS SUBSTITUTION SHALL BE MADE AT THE RATE OF 3 - 7/8" Ø STUDS FOR 4 - 3/4" Ø STUDS, AND STUD SPACING CHANGES SHALL BE MADE AS NECESSARY TO PROVIDE THE SAME EQUIVALENT NUMBER OF 7/8" Ø STUDS ALONG THE BEAM AS SHOWN FOR 3/4" Ø STUDS BASED ON THE RATIO OF 3 - 7/8" Ø STUDS FOR 4 - 3/4" Ø STUDS. STUDS OF THE LENGTH SPECIFIED ON THE PLANS MUST BE PROVIDED. THE MAXIMUM SPACING SHALL BE 2'-0".

EXCEPT AT THE INTERIOR SUPPORTS OF CONTINUOUS BEAMS WHERE THE COVER PLATE IS IN CONTACT WITH BEARING PLATE, THE CONTRACTOR MAY, AT HIS OPTION, SUBSTITUTE FOR THE COVER PLATES DESIGNATED ON THE PLANS COVER PLATES OF THE EQUIVALENT AREA PROVIDED THESE PLATES ARE AT LEAST 5/16" IN THICKNESS AND DO NOT EXCEED A WIDTH EQUAL TO THE FLANGE WIDTH LESS 2" OR A THICKNESS EQUAL TO 2 TIMES THE FLANGE THICKNESS. THE SIZE OF FILLET WELDS SHALL CONFORM TO THE REQUIREMENTS OF THE CURRENT ANSI/AASHTO/AWS "BRIDGE WELDING CODE". ELECTROSLAG WELDING WILL NOT BE PERMITTED.

WITH THE SOLE EXCEPTION OF EDGES AT SURFACES WHICH BEAR ON OTHER SURFACES, ALL SHARP EDGES AND ENDS OF SHAPES AND PLATES SHALL BE SLIGHTLY ROUNDED BY SUITABLE MEANS TO A RADIUS OF APPROXIMATELY 1/16 INCH OR EQUIVALENT FLAT SURFACE AT A SUITABLE ANGLE PRIOR TO PAINTING, GALVANIZING, OR METALLIZING.

HANDRAILS AND POSTS:

METAL STANDARDS AND FACES OF THE CONCRETE END POSTS FOR THE METAL RAIL SHALL BE SET NORMAL TO THE GRADE OF THE CURB, UNLESS OTHERWISE SHOWN ON PLANS. THE METAL RAIL AND TOPS OF CONCRETE POSTS USED WITH THE ALUMINUM RAIL SHALL BE BUILT PARALLEL TO THE GRADE OF THE CURB.

METAL HANDRAILS SHALL BE IN ACCORDANCE WITH THE PLANS. RAILS SHALL BE AS MANUFACTURED FOR BRIDGE RAILING. CASTINGS SHALL BE OF A UNIFORM APPEARANCE. FINS AND OTHER DEFORMATIONS RESULTING FROM CASTING OR OTHERWISE SHALL BE REMOVED IN A MANNER SO THAT A UNIFORM COLORING OF THE COMPLETED CASTING SHALL BE OBTAINED. CASTINGS WITH DISCOLORATIONS OR OF NON-UNIFORM COLORING WILL NOT BE ACCEPTED. CERTIFIED MILL REPORTS ARE REQUIRED FOR METAL RAILS AND POSTS.

SPECIAL NOTES:

GENERALLY, IN CASE OF DISCREPANCY, THIS STANDARD SHEET OF NOTES SHALL GOVERN OVER THE SPECIFICATIONS, BUT THE REMAINDER OF THE PLANS SHALL GOVERN OVER NOTES HEREON, AND SPECIAL PROVISIONS SHALL GOVERN OVER ALL. SEE SPECIFICATIONS ARTICLE 105-4.

ENGLISH

JANUARY, 1990

STD. NO. SN