This electronic collection of documents is provided for the convenience of the user and is Not a Certified Document –

The documents contained herein were originally issued and sealed by the individuals whose names and license numbers appear on each page, on the dates appearing with their signature on that page.
This file or an individual page shall not be considered a certified document.

01/16/24

TIP PROJECT: HN-0029

CONTRACT: DN01054

See Sheet 1A For Index of Sheets

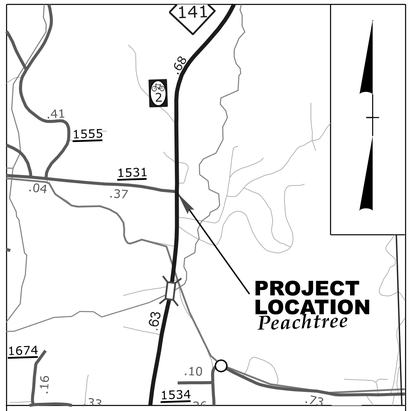

VICINITY MAP (NTS)

STATE OF NORTH CAROLINA
DIVISION OF HIGHWAYS

CHEROKEE COUNTY

LOCATION: *NC-141 AT SR 1531 (HENDRIX RD)*

TYPE OF WORK: *GRADING, PAVING, DRAINAGE*

STATE	STATE PROJECT REFERENCE NO.	SHEET NO.	TOTAL SHEETS
N.C.	HN-0029	1	

STATE PROJ. NO.	F. A. PROJ. NO.	DESCRIPTION
51459.3.1		CONSTRUCTION

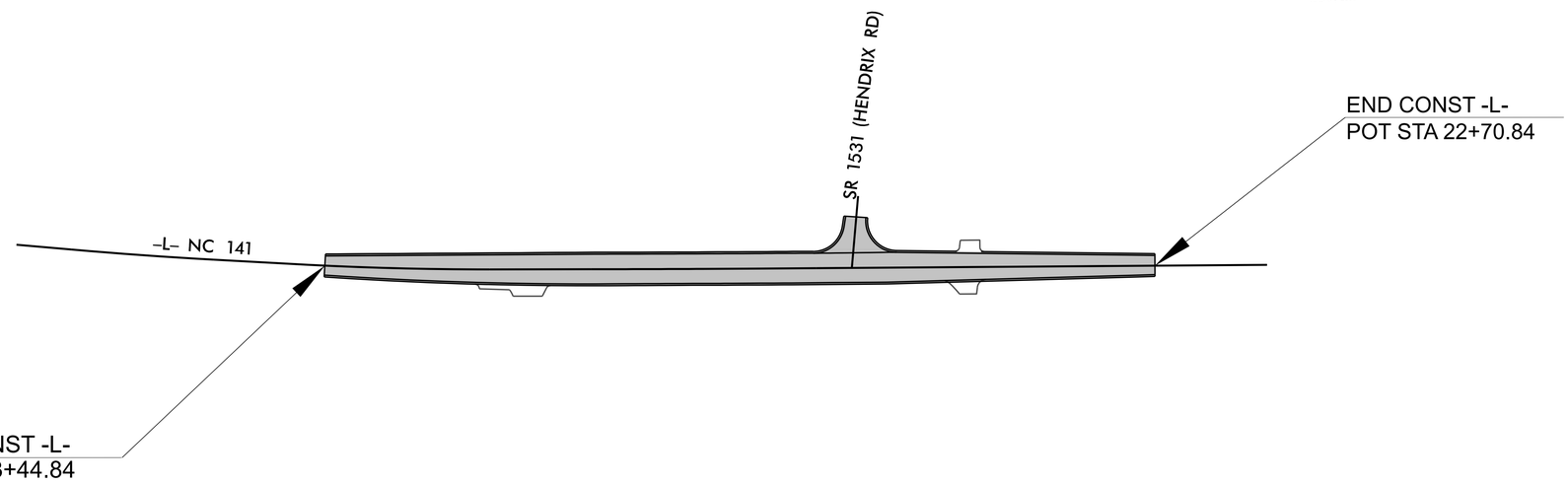

DOCUMENT NOT CONSIDERED FINAL UNLESS ALL SIGNATURES COMPLETED

GRAPHIC SCALES

50 25 0 50 100
PLANS

50 25 0 50 100
PROFILE (HORIZONTAL)

10 5 0 10 20
PROFILE (VERTICAL)

PROJECT LENGTH

LENGTH OF ROADWAY PROJECT = 0.175 MILES

Prepared in the Office of:

DIVISION OF HIGHWAYS

253 Webster Rd., Sylva NC, 28779

2024 STANDARD SPECIFICATIONS

RIGHT OF WAY DATE: N/A

LETTING DATE: JULY 23, 2024

JESSE A RUSSELL, P.E.
PROJECT ENGINEER

DREW C RIVENBARK, E.I.
PROJECT DESIGN ENGINEER

HYDRAULICS ENGINEER

DocuSigned by:
Andy Russell
E9017A2F46B143D...
SIGNATURE: *P.E.*

NORTH CAROLINA PROFESSIONAL SEAL 037962 ENGINEER ANDREW RUSSELL

ROADWAY DESIGN ENGINEER

DocuSigned by:
Andy Russell
SIGNATURE: *P.E.*

NORTH CAROLINA PROFESSIONAL SEAL 037962 ENGINEER ANDREW RUSSELL

STATE OF NORTH CAROLINA DEPARTMENT OF TRANSPORTATION

DOT/ext-dcrivenbark1- 6/28/2024

INDEX OF SHEETS

GENERAL NOTES: 2024 SPECIFICATIONS
EFFECTIVE: 01-16-2024
REVISED:

GRADING AND SURFACING OR RESURFACING AND WIDENING:

THE GRADE LINES SHOWN DENOTE THE FINISHED ELEVATION OF THE PROPOSED SURFACING AT GRADE POINTS SHOWN ON THE TYPICAL SECTIONS. WHERE NO GRADE LINES ARE SHOWN, THE PROFILES SHOWN DENOTE THE TOP ELEVATION OF THE EXISTING PAVEMENT ALONG THE CENTER LINE OF SURVEY ON WHICH THE PROPOSED RESURFACING WILL BE PLACED. GRADE LINES MAY BE ADJUSTED BY THE ENGINEER IN ORDER TO SECURE A PROPER TIE-IN.

CLEARING:

CLEARING ON THIS PROJECT SHALL BE PERFORMED TO THE LIMITS ESTABLISHED BY METHOD II.

SIDE ROADS:

THE CONTRACTOR WILL BE REQUIRED TO DO ALL NECESSARY WORK TO PROVIDE SUITABLE CONNECTIONS WITH ALL ROADS, STREETS, AND DRIVES ENTERING THIS PROJECT. THIS WORK WILL BE PAID FOR AT THE CONTRACT UNIT PRICE FOR THE PARTICULAR ITEMS INVOLVED.

UTILITIES:

UTILITY OWNERS ON THIS PROJECT ARE FRONTIER

ANY RELOCATION OF EXISTING UTILITIES WILL BE ACCOMPLISHED BY OTHERS.

2024 ROADWAY ENGLISH STANDARD DRAWINGS

The following Roadway Standards as appear in "Roadway Standard Drawings" Contracts Standards and Development Unit - N. C. Department of Transportation - Raleigh, N. C., Dated January 16, 2024 are applicable to this project and by reference hereby are considered a part of these plans:

STD.NO. TITLE
DIVISION 2 - EARTHWORK
200.02 Method of Clearing - Method II
225.02 Guide for Grading Subgrade - Secondary and Local
DIVISION 3 - PIPE CULVERTS
300.01 Method of Pipe Installation
DIVISION 7 - CONCRETE PAVEMENTS AND SHOULDERS
700.05 Tying Proposed Pavement to Existing Pavement
DIVISION 8 - INCIDENTALS
876.02 Guide for Rip Rap at Pipe Outlets

STATE OF NORTH CAROLINA, DIVISION OF HIGHWAYS

CONVENTIONAL PLAN SHEET SYMBOLS

Note: Not to Scale

BOUNDARIES AND PROPERTY:

- State Line
- County Line
- Township Line
- City Line
- Reservation Line
- Property Line
- Existing Iron Pin (EIP) — EIP
- Computed Property Corner
- Existing Concrete Monument (ECM) — ECM
- Parcel / Sequence Number — 123
- Existing Fence Line
- Proposed Woven Wire Fence
- Proposed Chain Link Fence
- Proposed Barbed Wire Fence
- Existing Wetland Boundary — WLB
- Proposed Wetland Boundary — WLB
- Existing Endangered Animal Boundary — EAB
- Existing Endangered Plant Boundary — EPB
- Existing Historic Property Boundary — HPB
- Known Contamination Area: Soil — S
- Potential Contamination Area: Soil — S
- Known Contamination Area: Water — W
- Potential Contamination Area: Water — W
- Contaminated Site: Known or Potential

BUILDINGS AND OTHER CULTURE:

- Gas Pump Vent or U/G Tank Cap
- Sign — S
- Well — W
- Small Mine
- Foundation
- Area Outline
- Cemetery
- Building
- School
- Church
- Dam

HYDROLOGY:

- Stream or Body of Water
- Hydro, Pool or Reservoir
- Jurisdictional Stream — JS
- Buffer Zone 1 — BZ 1
- Buffer Zone 2 — BZ 2
- Flow Arrow
- Disappearing Stream
- Spring
- Wetland
- Proposed Lateral, Tail, Head Ditch — FLOW
- False Sump

RAILROADS:

- Standard Gauge — CSX TRANSPORTATION
- RR Signal Milepost — MILEPOST 35
- Switch — SWITCH
- RR Abandoned
- RR Dismantled

RIGHT OF WAY & PROJECT CONTROL:

- Primary Horiz Control Point
- Primary Horiz and Vert Control Point
- Secondary Horiz and Vert Control Point
- Vertical Benchmark
- Existing Right of Way Monument
- Proposed Right of Way Monument (Rebar and Cap)
- Proposed Right of Way Monument (Concrete)
- Existing Permanent Easement Monument
- Proposed Permanent Easement Monument (Rebar and Cap)
- Existing C/A Monument
- Proposed C/A Monument (Rebar and Cap)
- Proposed C/A Monument (Concrete)
- Existing Right of Way Line
- Proposed Right of Way Line — RW
- Existing Control of Access Line — CA
- Proposed Control of Access Line — CA
- Proposed ROW and CA Line — RW CA
- Existing Easement Line — E
- Proposed Temporary Construction Easement — E
- Proposed Temporary Drainage Easement — TDE
- Proposed Permanent Drainage Easement — PDE
- Proposed Permanent Drainage/Utility Easement — DUE
- Proposed Permanent Utility Easement — PUE
- Proposed Temporary Utility Easement — TUE
- Proposed Aerial Utility Easement — AUE

ROADS AND RELATED FEATURES:

- Existing Edge of Pavement
- Existing Curb
- Proposed Slope Stakes Cut — C
- Proposed Slope Stakes Fill — F
- Proposed Curb Ramp — CR
- Existing Metal Guardrail
- Proposed Guardrail
- Existing Cable Guiderail
- Proposed Cable Guiderail
- Equality Symbol
- Pavement Removal

VEGETATION:

- Single Tree
- Single Shrub
- Hedge
- Woods Line
- Orchard
- Vineyard — Vineyard

EXISTING STRUCTURES:

MAJOR:

- Bridge, Tunnel or Box Culvert — CONC
- Bridge Wing Wall, Head Wall and End Wall — CONC WW

MINOR:

- Head and End Wall — CONC HW
- Pipe Culvert
- Footbridge
- Drainage Box: Catch Basin, DI or JB — CB
- Paved Ditch Gutter
- Storm Sewer Manhole — S
- Storm Sewer — S

UTILITIES:

** SUE - Subsurface Utility Engineering*
LOS - Level of Service - A,B,C or D (Accuracy)

POWER:

- Existing Power Pole
- Proposed Power Pole
- Existing Joint Use Pole
- Proposed Joint Use Pole
- Power Manhole — P
- Power Line Tower
- Power Transformer
- U/G Power Cable Hand Hole — HH
- H-Frame Pole
- U/G Power Line Test Hole (SUE - LOS A)*
- U/G Power Line (SUE - LOS B)* — P
- U/G Power Line (SUE - LOS C)* — P
- U/G Power Line (SUE - LOS D)* — P

TELEPHONE:

- Existing Telephone Pole
- Proposed Telephone Pole
- Telephone Manhole — T
- Telephone Pedestal — T
- Telephone Cell Tower
- U/G Telephone Cable Hand Hole — HH
- U/G Telephone Test Hole (SUE - LOS A)*
- U/G Telephone Cable (SUE - LOS B)* — T
- U/G Telephone Cable (SUE - LOS C)* — T
- U/G Telephone Cable (SUE - LOS D)* — T
- U/G Telephone Conduit (SUE - LOS B)* — TC
- U/G Telephone Conduit (SUE - LOS C)* — TC
- U/G Telephone Conduit (SUE - LOS D)* — TC
- U/G Fiber Optics Cable (SUE - LOS B)* — T FO
- U/G Fiber Optics Cable (SUE - LOS C)* — T FO
- U/G Fiber Optics Cable (SUE - LOS D)* — T FO

WATER:

- Water Manhole — W
- Water Meter
- Water Valve
- Water Hydrant
- U/G Water Line Test Hole (SUE - LOS A)*
- U/G Water Line (SUE - LOS B)* — W
- U/G Water Line (SUE - LOS C)* — W
- U/G Water Line (SUE - LOS D)* — W
- Above Ground Water Line — A/G Water

TV:

- TV Pedestal — C
- TV Tower
- U/G TV Cable Hand Hole — HH
- U/G TV Test Hole (SUE - LOS A)*
- U/G TV Cable (SUE - LOS B)* — TV
- U/G TV Cable (SUE - LOS C)* — TV
- U/G TV Cable (SUE - LOS D)* — TV
- U/G Fiber Optic Cable (SUE - LOS B)* — TV FO
- U/G Fiber Optic Cable (SUE - LOS C)* — TV FO
- U/G Fiber Optic Cable (SUE - LOS D)* — TV FO

GAS:

- Gas Valve
- Gas Meter
- U/G Gas Line Test Hole (SUE - LOS A)*
- U/G Gas Line (SUE - LOS B)* — G
- U/G Gas Line (SUE - LOS C)* — G
- U/G Gas Line (SUE - LOS D)* — G
- Above Ground Gas Line — A/G Gas

SANITARY SEWER:

- Sanitary Sewer Manhole
- Sanitary Sewer Cleanout
- U/G Sanitary Sewer Line — SS
- Above Ground Sanitary Sewer — A/G Sanitary Sewer
- SS Force Main Line Test Hole (SUE - LOS A)*
- SS Force Main Line (SUE - LOS B)* — FSS
- SS Force Main Line (SUE - LOS C)* — FSS
- SS Force Main Line (SUE - LOS D)* — FSS

MISCELLANEOUS:

- Utility Pole
- Utility Pole with Base
- Utility Located Object
- Utility Traffic Signal Box — S
- Utility Unknown U/G Line (SUE - LOS B)* — ?UTL
- U/G Tank; Water, Gas, Oil
- Underground Storage Tank, Approx. Loc. — UST
- A/G Tank; Water, Gas, Oil
- Geoenvironmental Boring
- Abandoned According to Utility Records — AATUR
- End of Information — E.O.I.

11/14/23

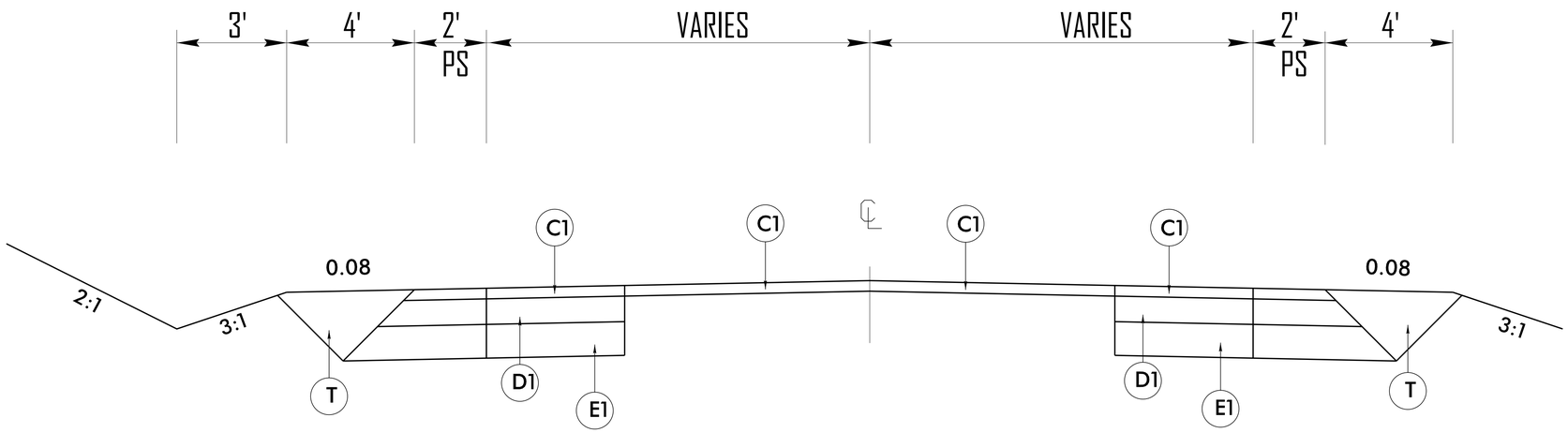

TYPICAL SECTION NO. 1

BEGINNING TO END

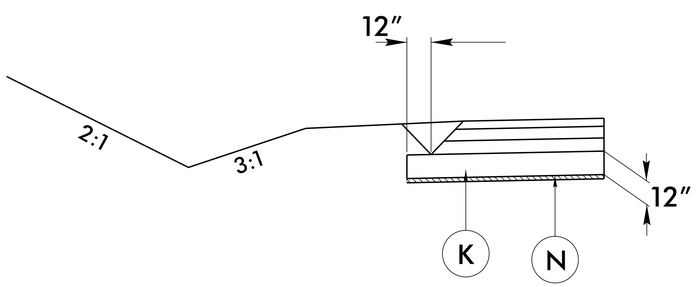

SHALLOW UNDERCUT DETAIL

USE WITH TYPICAL NO. 1

-L- 16+50 TO -L- 19+00

PAVEMENT SCHEDULE	
C1	PROP. APPROX. 2" ASPHALT CONCRETE SURFACE COURSE, TYPE S9.5C, AT AN AVERAGE RATE OF 224 LBS. PER SQ. YD.
D1	PROP. APPROX. 4" ASPHALT CONCRETE BASE COURSE, TYPE I19.0C, AT AN AVERAGE RATE OF 456 LBS. PER SQ. YD.
E1	PROP. APPROX. 5" ASPHALT CONCRETE BASE COURSE, TYPE B25.0C, AT AN AVERAGE RATE OF 570 LBS. PER SQ. YD.
K	12" STABILIZATION
N	GEOTEXTILE
T	EARTH MATERIAL

NOTE: PAVEMENT EDGE SLOPES ARE 1:1 UNLESS SHOWN OTHERWISE.

HN-0029

2A

NORTH CAROLINA
DEPARTMENT OF TRANSPORTATION

ROADWAY DESIGN UNIT

ROADWAY DESIGN ENGINEER

NORTH CAROLINA PROFESSIONAL SEAL 037962 ENGINEER JESSE A. RUSSELL

DocuSigned by:
Andy Russell
E9017A3F46814E9...

HYDRAULICS ENGINEER

NORTH CAROLINA PROFESSIONAL SEAL 037962 ENGINEER JESSE A. RUSSELL

DocuSigned by:
Andy Russell
E9017A3F46814E9...

DOCUMENT NOT CONSIDERED FINAL UNLESS ALL SIGNATURES COMPLETED

SUMMARY OF EARTHWORK

IN CUBIC YARDS

STATION	STATION	UNCL. EXCAV.	EMBANK. +%	BORROW	WASTE
13+44.84	22+70.84	650			625
SUBTOTALS:		650			625
PROJECT TOTALS:		650			625
GRAND TOTALS:		650			625
SAY:		650			625

SUMMARY OF AGGREGATE SUBGRADE/STABILIZATION

STATION	STATION	SHALLOW UNDERCUT CY	CLASS IV SUBGRADE STABILIZATION TONS	GEOTEXTILE FOR SOIL STABILIZATION SY
16+50	19+00	1500	1000	600
SUBTOTALS:		1500	1000	600
PROJECT TOTALS:		1500	1000	600
GRAND TOTALS:		1500	1000	600
SAY:		1500	1000	600

LIST OF PIPES, ENDWALLS, ETC. (FOR PIPES 48" & UNDER)

STATION / SIZE / THICKNESS OR GAUGE	LOCATION (LT,RT, OR CL)	STRUCTURE NO. FROM	STRUCTURE NO. TO	TOP ELEVATION	INVERT ELEVATION	INVERT ELEVATION	SLOPE CRITICAL	CLASS IV R.C. PIPE (UNLESS NOTED OTHERWISE) 12"	15"	18"	24"	30"	36"	42"	48"
-L- 14+20.51	RT	403	401	DETERMINE IN FIELD											
-L- 14+27.82	CL	402	401	DETERMINE IN FIELD									80'		
-L- 15+53.55	RT	405	404	DETERMINE IN FIELD											
-L- 15+97.07	LT														
-L- 20+64.18	LT	407	406	DETERMINE IN FIELD											
TOTALS													80'		

STATION	BITUMINOUS COATED C.S. PIPE TYPE B (UNLESS NOTED OTHERWISE) 12" .064	15" .064	18" .064	24" .064	30" .079	36" .079	42" .109	48" .109	DRAINAGE PIPE (CLASS III R.C. PIPE OR ALUMINIZED C.S. PIPE, TYPE IR OR HDPE PIPE, TYPE S OR D) 12"	15"	18"	24"	30"	36"	42"	48"
-L- 14+20.51																
-L- 14+27.82																
-L- 15+53.55																
-L- 15+97.07																
-L- 20+64.18																
TOTALS																

STATION	15" SIDE DRAIN PIPE	18" SIDE DRAIN PIPE	24" SIDE DRAIN PIPE	ENDWALLS STD. 838.01, STD. 838.11 OR STD. 838.80 (UNLESS NOTED OTHERWISE) CU. YDS. R.C.P.	C.S.P.	QUANTITIES FOR DRAINAGE STRUCTURES * TOTAL L.F. FOR PAY QUANTITY SHALL BE COL. 'A' + (1.3 X COL.'B') PER EACH (0' THRU 5.0')	LIN. *FT. A 5.0' THRU 10.0'	B 10.0' AND ABOVE	C.B. STD. 840.01 OR STD. 840.02	FRAME, GRATES AND HOOD STANDARD 840.03 TYPE OF GRATE E	F	G	
-L- 14+20.51		50'											
-L- 14+27.82				8.9									
-L- 15+53.55		80'											
-L- 15+97.07													
-L- 20+64.18		30'											
TOTALS		160'		9									

STATION		D.I. STD. 840.14 OR STD. 840.15	D.I. FRAME & GRATE STD. 840.16	G.D.I. TYPE "A" STD. 840.17 OR 840.26	G.D.I. TYPE "B" STD. 840.18 OR 840.27	G.D.I. TYPE "D" STD. 840.19 OR 840.28	G.D.I. FRAME WITH GRATE STD. 840.22	G.D.I. FRAME WITH TWO GRATES STD. 840.22	G.D.I. (N.S.) FRAME WITH GRATE STD. 840.24	G.D.I. (N.S.) FRAME WITH TWO GRATES STD. 840.24	J.B. STD. 840.31 OR 840.32	T.B.J.B. STD. 840.34	M.H. FRAME & COVER STD. 840.54					CORR. STEEL ELBOWS NO. & SIZE	CONC. COLLARS CL. "B" C.Y. STD 840.72	CONC. & BRICK PIPE PLUG, C.Y. STD. 840.71	PIPE REMOVAL LIN.FT.	REMARKS
-L- 14+20.51																						
-L- 14+27.82																						
-L- 15+53.55																						
-L- 15+97.07																					60'	24"
-L- 20+64.18																						
TOTALS																					60'	

ABBREVIATIONS

C.B.	CATCH BASIN
N.D.I.	NARROW DROP INLET
D.I.	DROP INLET
G.D.I.	GRATED DROP INLET
G.D.I. (N.S.)	GRATED DROP INLET (NARROW SLOT)
J.B.	JUNCTION BOX
M.H.	MANHOLE
T.B.D.I.	TRAFFIC BEARING DROP INLET
T.B.J.B.	TRAFFIC BEARING JUNCTION BOX

HN-0029

3B

NORTH CAROLINA
DEPARTMENT OF TRANSPORTATION

ROADWAY DESIGN UNIT

ROADWAY DESIGN ENGINEER

SEAL 037962
JESSE A. RUSSELL

DocuSigned by:
Andy Russell
E9017A3F468143D...

HYDRAULICS ENGINEER

SEAL 037962
JESSE A. RUSSELL

DocuSigned by:
Andy Russell
E9017A3F468143D...

DOCUMENT NOT CONSIDERED FINAL UNLESS ALL SIGNATURES COMPLETED

11/14/23

CUR DATA -L-
PIc 11+41.15
Δc = 01°53'38.6" (LT)
D = 01°11'16.4"
Lc = 159.45
Tc = 79.73
R = 4,823.31
SE = 0.000

CUR DATA -L-
PIc 14+21.60
Δc = 03°12'38.1" (LT)
D = 01°29'49.1"
Lc = 214.47
Tc = 107.26
R = 3,827.46
SE = 0.000

CUR DATA -L-
PIc 17+67.31
Δc = 00°21'16.2" (LT)
D = 00°08'27.3"
Lc = 251.57
Tc = 125.79
R = 40,659.36
SE = 0.000

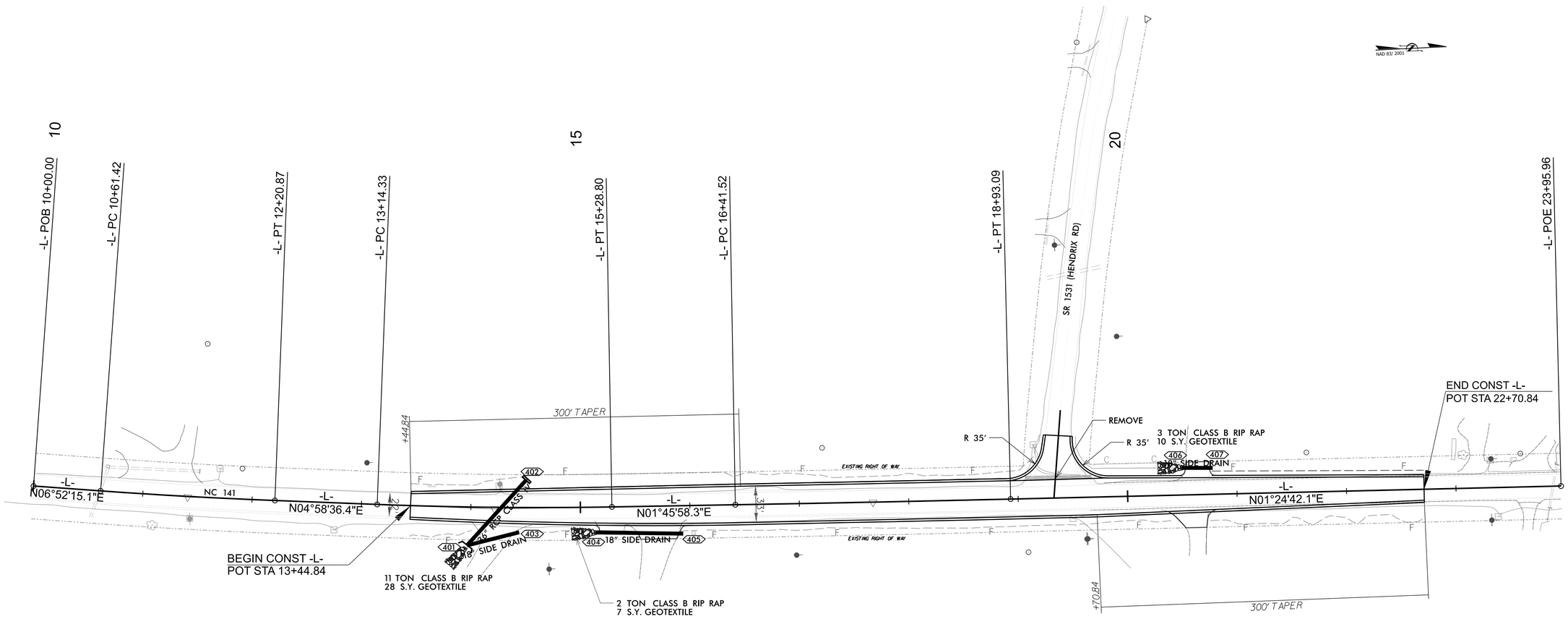

HN-0029

4

NORTH CAROLINA
DEPARTMENT OF TRANSPORTATION

ROADWAY DESIGN UNIT

ROADWAY DESIGN ENGINEER

NORTH CAROLINA PROFESSIONAL SEAL 037962 ENGINEER ANDY A. RUSSELL

DocuSigned by:
Andy Russell
E9017A3F468143D...

HYDRAULICS ENGINEER

NORTH CAROLINA PROFESSIONAL SEAL 037962 ENGINEER ANDY A. RUSSELL

DocuSigned by:
Andy Russell
E9017A3F468143D...

DOCUMENT NOT CONSIDERED FINAL UNLESS ALL SIGNATURES COMPLETED

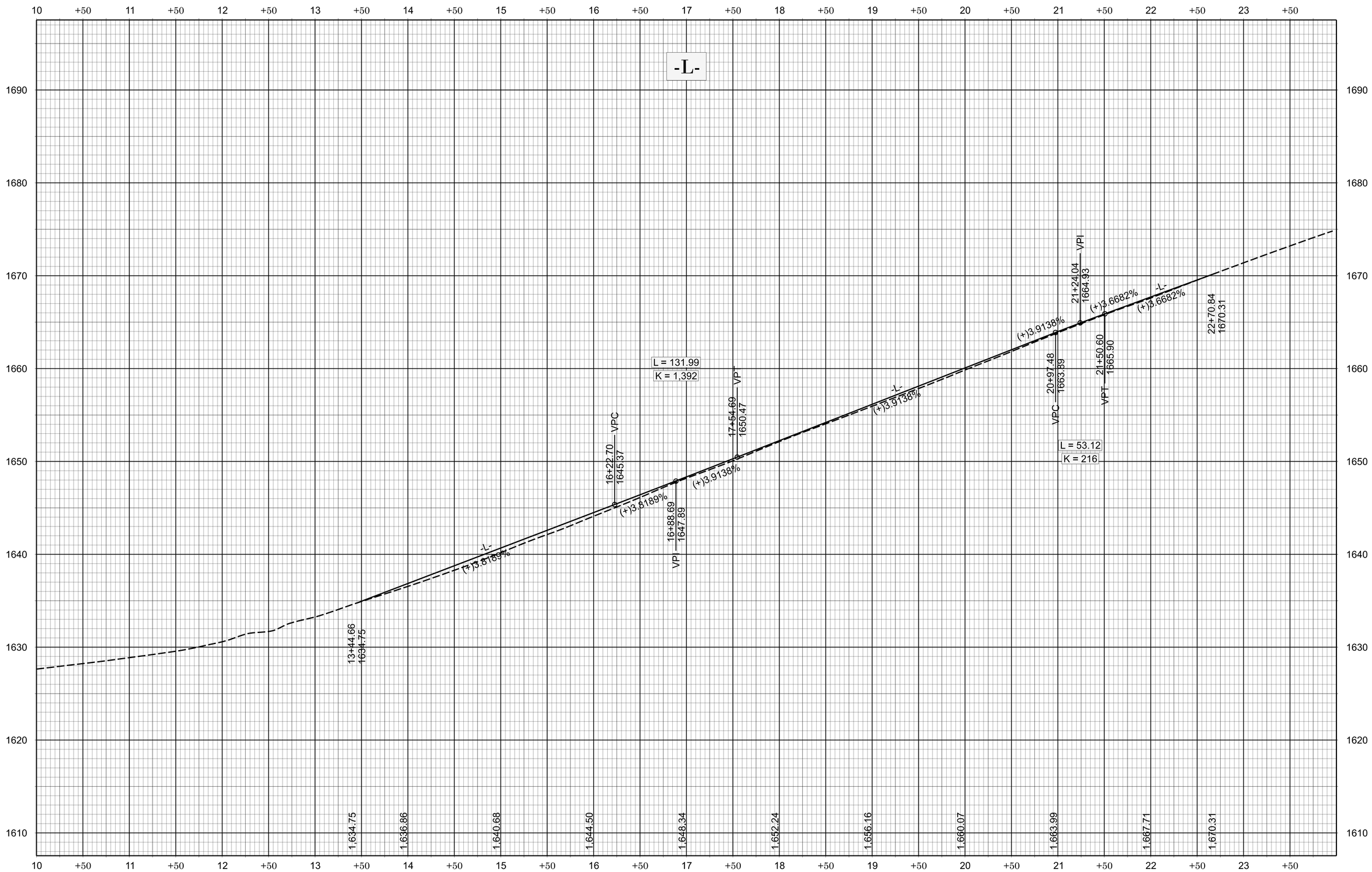

HN-0029

5

NORTH CAROLINA
DEPARTMENT OF TRANSPORTATION

ROADWAY DESIGN UNIT

ROADWAY DESIGN ENGINEER

NORTH CAROLINA PROFESSIONAL SEAL 037962 ENGINEER

Digitally signed by: Andy Russell
E9017A3F4681430...

HYDRAULICS ENGINEER

NORTH CAROLINA PROFESSIONAL SEAL 037962 ENGINEER

Digitally signed by: Andy Russell
E9017A3F4681430...

DOCUMENT NOT CONSIDERED FINAL UNLESS ALL SIGNATURES COMPLETED

5/26/20

STATE OF NORTH CAROLINA
DEPARTMENT OF TRANSPORTATION

PAVEMENT MARKING PLAN

CHEROKEE COUNTY

LOCATION: NC 141 AT SR 1531 (HENDRIX RD)

ROADWAY STANDARD DRAWING

THE FOLLOWING ROADWAY STANDARDS AS APPEAR IN "ROADWAY STANDARD DRAWINGS" - PROJECT SERVICES UNIT - N.C. DEPARTMENT OF TRANSPORTATION - RALEIGH, N.C., DATED JANUARY 2024 ARE APPLICABLE TO THIS PROJECT AND BY REFERENCE HEREBY ARE CONSIDERED A PART OF THESE PLANS:

STD. NO.	TITLE
1205.01	PAVEMENT MARKINGS - LINE TYPES AND OFFSETS
1205.02	PAVEMENT MARKINGS - TWO-LANE AND MULTILANE ROADWAYS
1205.03	PAVEMENT MARKINGS - EXIT AND ENTRANCE RAMPS
1205.04	PAVEMENT MARKINGS - INTERSECTIONS
1205.05	PAVEMENT MARKINGS - TURN LANES
1205.06	PAVEMENT MARKINGS - LANE DROPS
1205.07	PAVEMENT MARKINGS - PEDESTRIAN CROSSWALKS
1205.08	PAVEMENT MARKINGS - SYMBOLS AND WORD MESSAGES
1205.09	PAVEMENT MARKINGS - PAINTED ISLANDS
1205.10	PAVEMENT MARKINGS - SCHOOL AREAS
1205.11	PAVEMENT MARKINGS - RAILROAD CROSSINGS
1205.12	PAVEMENT MARKINGS - BRIDGES
1205.13	PAVEMENT MARKINGS - LANE REDUCTIONS
1205.14	PAVEMENT MARKINGS - ROUNDABOUTS
1205.15	PAVEMENT MARKINGS - SUPERSTREETS
1250.01	RAISED PAVEMENT MARKERS - INSTALLATION SPACING
1251.01	RAISED PAVEMENT MARKERS - PERMANENT AND TEMPORARY
1253.01	RAISED PAVEMENT MARKERS - SNOWPLOWABLE
1261.01	GUARDRAIL AND BARRIER DELINEATORS - INSTALLATION SPACING
1261.02	GUARDRAIL AND BARRIER DELINEATORS - TYPES AND MOUNTING
1262.01	GUARDRAIL END DELINEATION
1264.01	OBJECT MARKERS - TYPES
1264.02	OBJECT MARKERS - INSTALLATION
1267.01	FLEXIBLE DELINEATORS - INSTALLATION
1267.02	FLEXIBLE DELINEATORS - SPACING TABLES
1267.03	FLEXIBLE DELINEATORS - INTERCHANGE PLACEMENT

INDEX

GENERAL NOTES

THE FOLLOWING GENERAL NOTES APPLY AT ALL TIMES FOR THE DURATION OF THE CONSTRUCTION PROJECT, EXCEPT WHEN OTHERWISE NOTED IN THE PLAN, OR DIRECTED BY THE ENGINEER.

A) INSTALL PAVEMENT MARKINGS AND PAVEMENT MARKERS ON THE FINAL SURFACE AS FOLLOWS:

ROAD NAME	MARKING	MARKER
ALL ROADS	THERMOPLASTIC	NONE

B) TIE PROPOSED PAVEMENT MARKING LINES TO EXISTING PAVEMENT MARKING LINES.

C) REMOVE/REPLACE ANY CONFLICTING/DAMAGED PAVEMENT MARKINGS AND MARKERS.

D) UNLESS OTHERWISE SPECIFIED, HEATED-IN-PLACE THERMOPLASTIC MAY BE USED IN LIEU OF EXTRUDED THERMOPLASTIC FOR STOP BARS, SYMBOLS, CHARACTERS AND DIAGONALS. IF HEATED-IN-PLACE IS USED, IT SHALL BE PAID FOR USING THE EXTRUDED THERMOPLASTIC PAY ITEM.

E) UNLESS OTHERWISE SPECIFIED, HEATED-IN-PLACE THERMOPLASTIC MAY BE USED IN LIEU OF COLD APPLIED PLASTIC FOR STOP BARS, SYMBOLS, CHARACTERS AND DIAGONALS ON ASPHALT OR CONCRETE ROADWAYS. IF HEATED-IN-PLACE IS USED, IT SHALL BE PAID FOR USING THE COLD APPLIED PAY ITEM.

FINAL PAVEMENT MARKING SCHEDULE

SYMBOL	DESCRIPTION
PAVEMENT MARKINGS	
THERMOPLASTIC (4", 90 MIL)	
T1	(4") WHITE EDGELINE
T2	(4") SOLID WHITE LANE LINE
T4	(4") 3 FT. - 9 FT./SP WHITE MINISKIP
T13	(4") YELLOW DOUBLE CENTER
THERMOPLASTIC (12", 90 MIL)	
T52	(12") YELLOW DIAGONAL
THERMOPLASTIC (24", 90 MIL)	
T61	(24") WHITE STOPBAR
THERMOPLASTIC (90 MIL)	
T70	LEFT TURN ARROW

PLAN PREPARED BY: N.C.D.O.T. DIVISION OF HIGHWAYS

JESSE A. RUSSELL, P.E. — PROJECT ENGINEER

DREW C. RIVENBARK, E.I. — PROJECT DESIGN ENGINEER

HN-0029

PMP | 1

NORTH CAROLINA DEPARTMENT OF TRANSPORTATION

APPROVED: DocuSigned by: Andy Russell E9017A3F468143D...

DATE: 06/19/2024

SEAL:

NORTH CAROLINA PROFESSIONAL SEAL 037962 ENGINEER JESSE A. RUSSELL

DOCUMENT NOT CONSIDERED FINAL UNLESS ALL SIGNATURES COMPLETED

STATE OF NORTH CAROLINA DEPARTMENT OF TRANSPORTATION

CONTRACT: DN01054 T.I.P.: HN-0029

5/26/20

CUR DATA -L-
PIc 11+41.15
Δc = 01°53'38.6" (LT)
D = 01°11'16.4"
Lc = 159.45
Tc = 79.73
R = 4,823.31
SE = 0.000

CUR DATA -L-
PIc 14+21.60
Δc = 03°12'38.1" (LT)
D = 01°29'49.1"
Lc = 214.47
Tc = 107.26
R = 3,827.46
SE = 0.000

CUR DATA -L-
PIc 17+67.31
Δc = 00°21'16.2" (LT)
D = 00°08'27.3"
Lc = 251.57
Tc = 125.79
R = 40,659.36
SE = 0.000

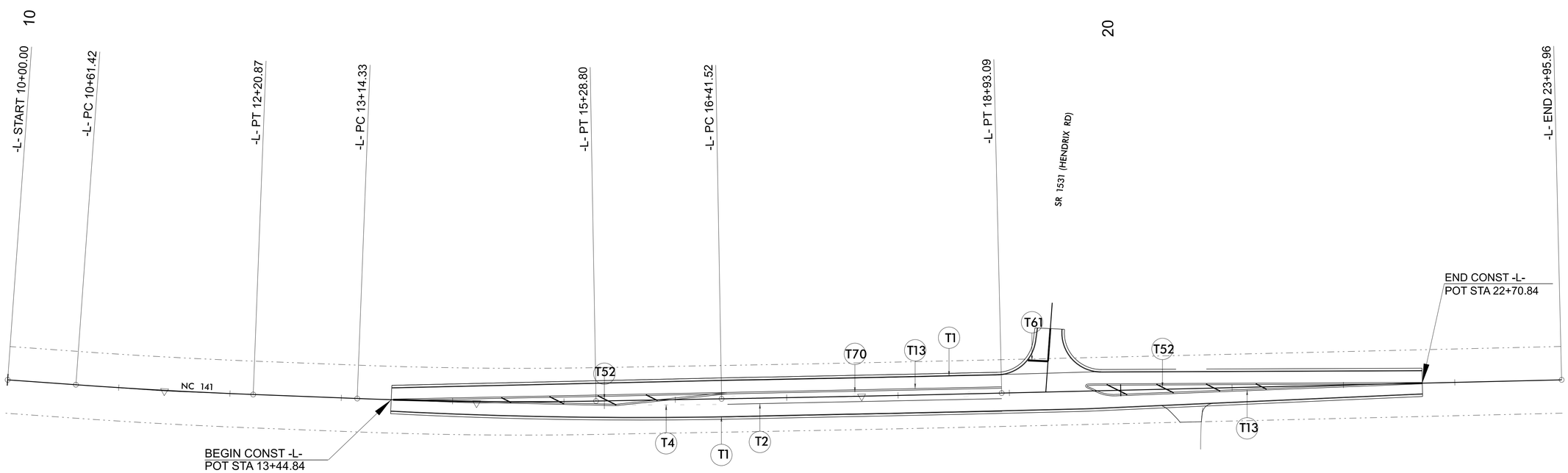

NAD 83/ 2001

HN-0029

PMP	2

NORTH CAROLINA
DEPARTMENT OF TRANSPORTATION

APPROVED: DocuSigned by: Andy Russell
E9173A3F468143D...

DATE: 06/19/2024

SEAL:

NORTH CAROLINA PROFESSIONAL SEAL 037962 ENGINEER JESSE A. RUSSELL

DOCUMENT NOT CONSIDERED FINAL UNLESS ALL SIGNATURES COMPLETED

STATE OF NORTH CAROLINA DEPARTMENT OF TRANSPORTATION

PROJECT: HN-0029

TIP

STATE	STATE PROJECT REFERENCE NO.	SHEET NO.	TOTAL SHEETS
N.C.	HN-0029	EC-1	

STATE PROJ. NO.	F. A. PROJ. NO.	DESCRIPTION
51459.3.1		CONSTRUCTION

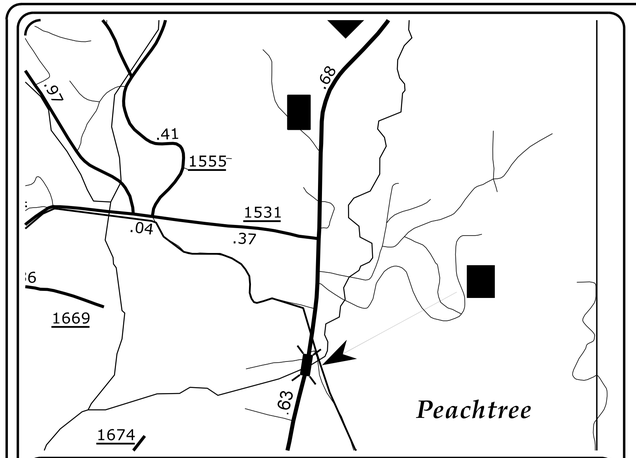

VICINITY MAP
NOT TO SCALE

STATE OF NORTH CAROLINA
DIVISION OF HIGHWAYS

PLAN FOR PROPOSED
HIGHWAY EROSION CONTROL

CHEROKEE COUNTY

LOCATION: *NC-141 AT SR 1531 (HENDRIX RD)*

TYPE OF WORK: *GRADING, PAVING, DRAINAGE*

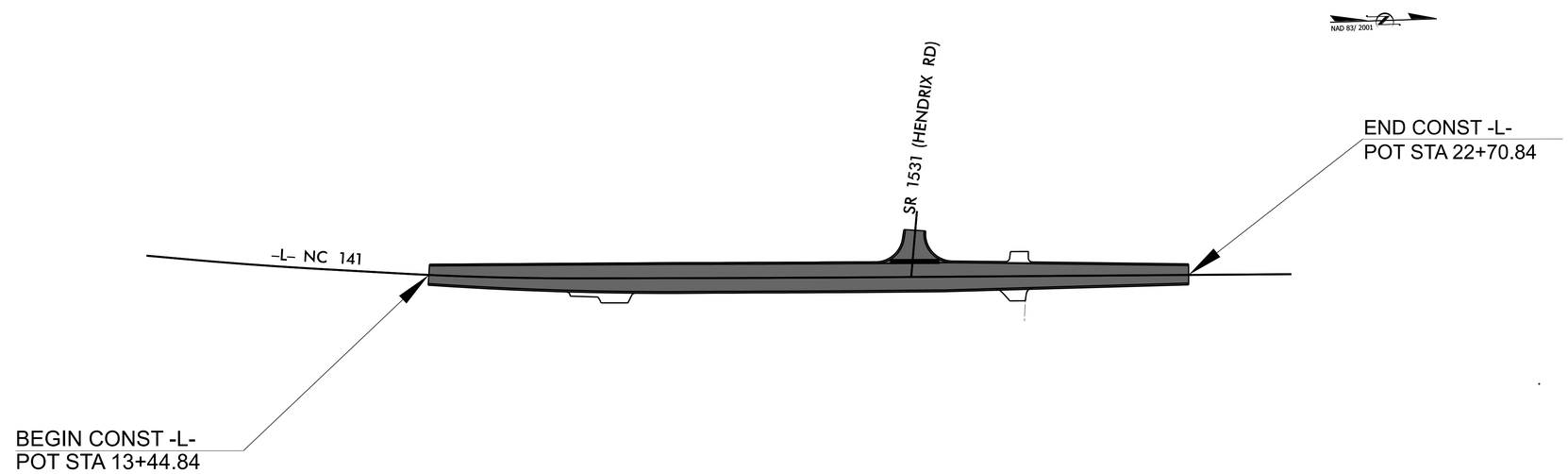

GRAPHIC SCALE

50 25 0 50 100

PLANS

THESE EROSION AND SEDIMENT CONTROL PLANS COMPLY WITH THE REGULATIONS SET FORTH BY THE NCG-010000 GENERAL CONSTRUCTION PERMIT EFFECTIVE APRIL 1, 2019 ISSUED BY THE NORTH CAROLINA DEPARTMENT OF ENVIRONMENT AND NATURAL RESOURCES DIVISION OF WATER QUALITY.

Prepared in the Office of:

DIVISION OF HIGHWAYS

253 WEBSTER RD.
SYLVA, NC 28779

2024 STANDARD SPECIFICATIONS

Designed by:

DREW C RIVENBARK, EI ***4342***

NAME *LEVEL III CERTIFICATION NO.*

Roadway Standard Drawings

The "Roadway Standard Drawings"- Roadway Design Unit - N. C. Department of Transportation - Raleigh, N. C., dated January 2024 and the latest revision thereto are applicable to this project and by reference hereby are considered a part of these plans.

PROJECT REFERENCE NO.	SHEET NO.
HN-0029	EC-02
ROADWAY DESIGN ENGINEER	HYDRAULICS ENGINEER

DIVISION OF HIGHWAYS
STATE OF NORTH CAROLINA

EROSION & SEDIMENT CONTROL LEGEND

Std. #	Description	Symbol
1605.01	Temporary Silt Fence	
1606.01	Special Sediment Control Fence	
1622.01	Temporary Berms and Slope Drains	
1630.02	Silt Basin Type B	
1630.03	Temporary Silt Ditch	TSD
1630.04	Stilling Basin	
1630.05	Temporary Diversion	TD
1630.06	Special Stilling Basin	
1630.07	Skimmer Basin	
1630.08	Tiered Skimmer Basin	
1630.09	Earthen Dam with Skimmer	
	Infiltration Basin	
	Rock Inlet Sediment Trap:	
1632.01	Type A	A
1632.02	Type B	B
1632.03	Type C	C

Std. #	Description	Symbol
1633.01	Temporary Rock Silt Check Type A	
1633.02	Temporary Rock Silt Check Type B	
1633.03	Temporary Rock Silt Check Type A with Excelsior Matting and Flocculant	
1634.01	Temporary Rock Sediment Dam Type A	
1634.02	Temporary Rock Sediment Dam Type B	
1635.01	Rock Pipe Inlet Sediment Trap Type A	A
1635.02	Rock Pipe Inlet Sediment Trap Type B	B
1636.01	Excelsior Wattle Check	
1636.01	Excelsior Wattle Check with Flocculant	
1636.01	Coir Fiber Wattle Check	
1636.01	Coir Fiber Wattle Check with Flocculant	
1636.02	Silt Fence Excelsior Wattle Break	EW
	Silt Fence Coir Fiber Wattle Break	CFW
1636.03	Excelsior Wattle Barrier	EW EW EW
1636.03	Coir Fiber Wattle Barrier	CFW CFW CFW

PROJECT REFERENCE NO.	SHEET NO.
HN-0029	EC-3
ROADWAY DESIGN ENGINEER	HYDRAULICS ENGINEER

DIVISION OF HIGHWAYS
STATE OF NORTH CAROLINA

SOIL STABILIZATION SUMMARY SHEET

MATTING FOR EROSION CONTROL

CONST SHEET NO.	LINE	FROM STATION	TO STATION	SIDE	ESTIMATE (SY)
4	4			LT	80
			SUBTOTAL		80
MISCELLANEOUS MATTING TO BE INSTALLED AS DIRECTED BY THE ENGINEER					1000
				TOTAL	1080
				SAY	1100

MATTING FOR EROSION CONTROL

CONST SHEET NO.	LINE	FROM STATION	TO STATION	SIDE	ESTIMATE (SY)

PROJECT REFERENCE NO.	SHEET NO.
HN-0029	EC-3B
ROADWAY DESIGN ENGINEER	HYDRAULICS ENGINEER

DIVISION OF HIGHWAYS
STATE OF NORTH CAROLINA

SOIL STABILIZATION TIMEFRAMES

SITE DESCRIPTION	STABILIZATION TIME	TIMEFRAME EXCEPTIONS
PERIMETER DIKES, SWALES, DITCHES AND SLOPES	7 DAYS	NONE
HIGH QUALITY WATER (HQW) ZONES	7 DAYS	NONE
SLOPES STEEPER THAN 3:1	7 DAYS	IF SLOPES ARE 10' OR LESS IN LENGTH AND ARE NOT STEEPER THAN 2:1, 14 DAYS ARE ALLOWED.
SLOPES 3:1 TO 4:1	14 DAYS	7 DAYS FOR SLOPES GREATER THAN 50' IN LENGTH WITH SLOPES STEEPER THAN 4:1. 7 DAYS FOR PERIMETER DIKES, SWALES, DITCHES PERIMETER SLOPES, AND HQW ZONES
ALL OTHER AREAS WITH SLOPES FLATTER THAN 4:1	14 DAYS	7 DAYS FOR PERIMETER DIKES, SWALES, DITCHES PERIMETER SLOPES, AND HQW ZONES

11/14/23

CUR DATA -L-
PIc 11+41.15
Δc = 01°53'38.6" (LT)
D = 01°11'16.4"
Lc = 159.45
Tc = 79.73
R = 4,823.31
SE = 0.000

CUR DATA -L-
PIc 14+21.60
Δc = 03°12'38.1" (LT)
D = 01°29'49.1"
Lc = 214.47
Tc = 107.26
R = 3,827.46
SE = 0.000

CUR DATA -L-
PIc 17+67.31
Δc = 00°21'16.2" (LT)
D = 00°08'27.3"
Lc = 251.57
Tc = 125.79
R = 40,659.36
SE = 0.000

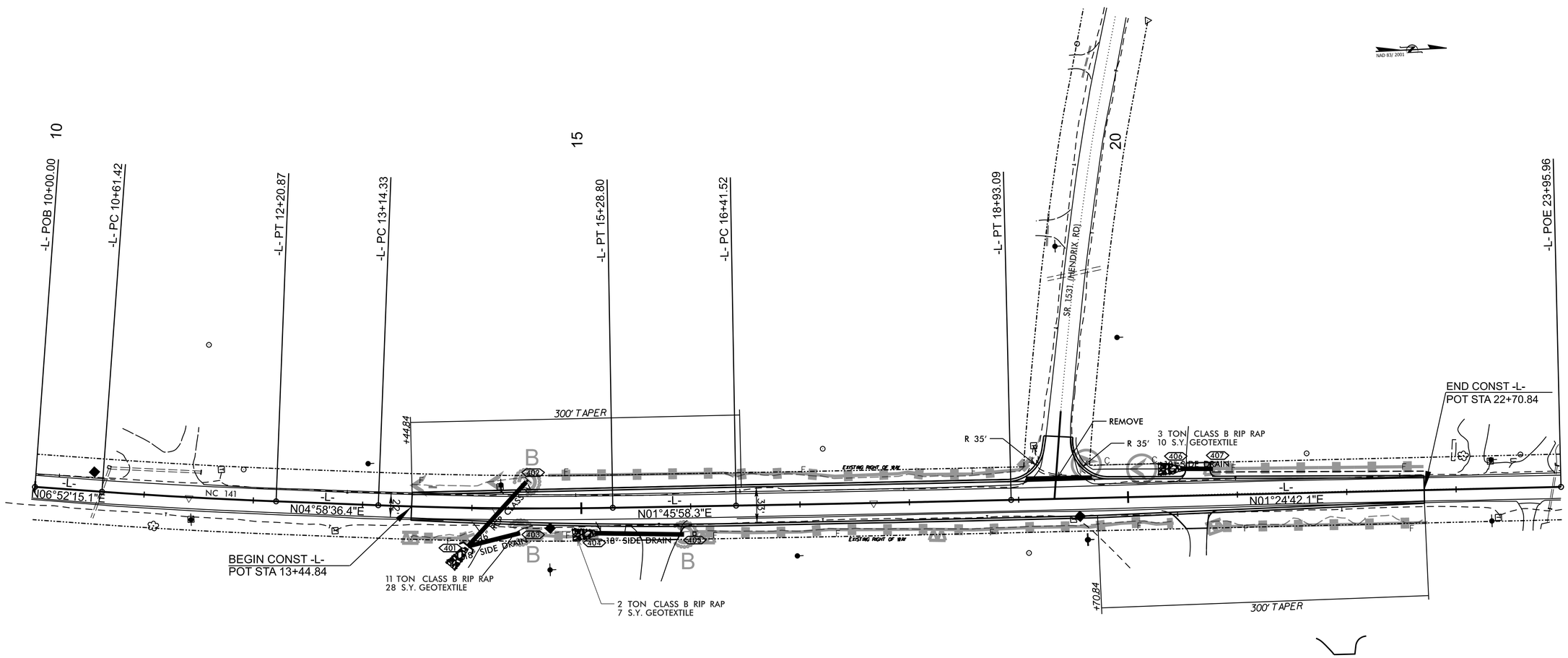

HN-0029

EC	4

NORTH CAROLINA
DEPARTMENT OF TRANSPORTATION

ROADWAY DESIGN UNIT

ROADWAY DESIGN
ENGINEER

HYDRAULICS
ENGINEER

DOCUMENT NOT CONSIDERED FINAL
UNLESS ALL SIGNATURES COMPLETED

PROJECT REFERENCE NO.	SHEET NO.
HN-0029	EC-5
R/W SHEET NO.	
ROADWAY DESIGN ENGINEER	HYDRAULICS ENGINEER

ONSITE CONCRETE WASHOUT STRUCTURE WITH LINER

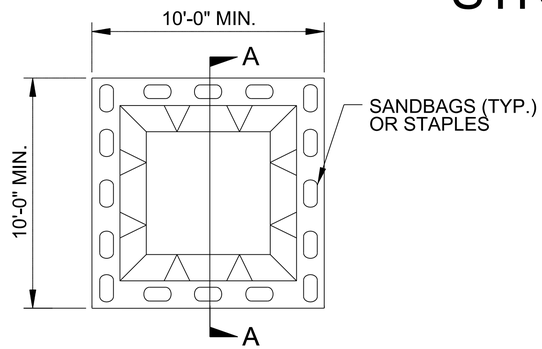

PLAN

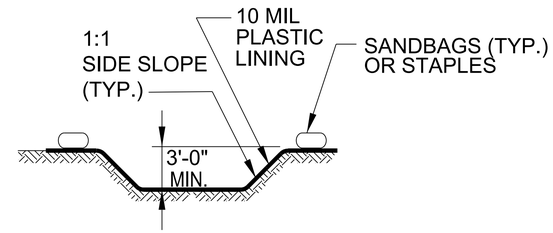

SECTION A-A

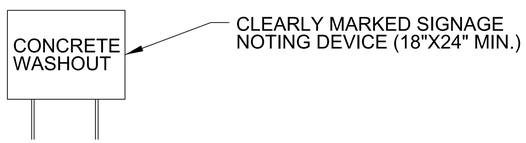

NOTES:
1. ACTUAL LOCATION DETERMINED IN FIELD

2. THE CONCRETE WASHOUT STRUCTURES SHALL BE MAINTAINED WHEN THE LIQUID AND/OR SOLID REACHES 75% OF THE STRUCTURES CAPACITY TO PROVIDE ADEQUATE HOLDING CAPACITY WITH A MINIMUM 12 INCHES OF FREEBOARD.

3.CONCRETE WASHOUT STRUCTURE NEEDS TO BE CLEARY MARKED WITH SIGNAGE NOTING DEVICE.

BELOW GRADE WASHOUT STRUCTURE

NOT TO SCALE

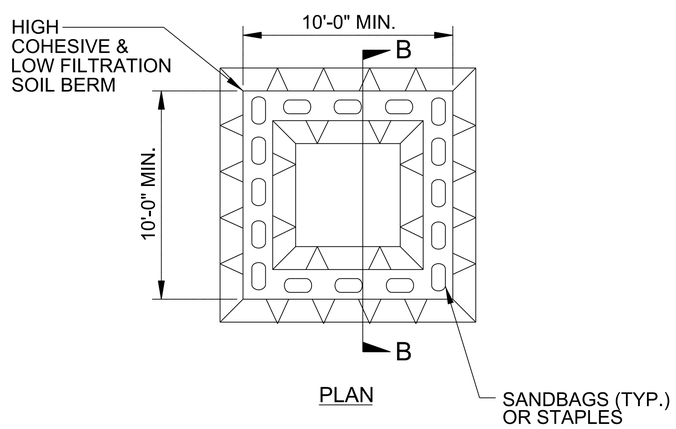

PLAN

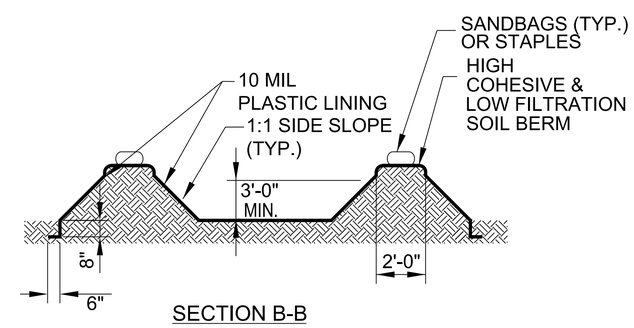

SECTION B-B

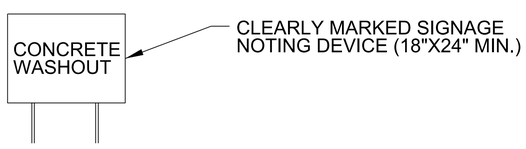

NOTES:
1. ACTUAL LOCATION DETERMINED IN FIELD

2. THE CONCRETE WASHOUT STRUCTURES SHALL BE MAINTAINED WHEN THE LIQUID AND/OR SOLID REACHES 75% OF THE STRUCTURES CAPACITY TO PROVIDE ADEQUATE HOLDING CAPACITY WITH A MINIMUM 12 INCHES OF FREEBOARD.

3.CONCRETE WASHOUT STRUCTURE NEEDS TO BE CLEARY MARKED WITH SIGNAGE NOTING DEVICE.

ABOVE GRADE WASHOUT STRUCTURE

NOT TO SCALE