PROJECT REFERENCE NO.		SHEET NO.
14CR.10871.1		3
STATE PROJECT	F.A. PROJECT NO.	DESCRIPTION
14CR.10871.7		

TYPICAL 1

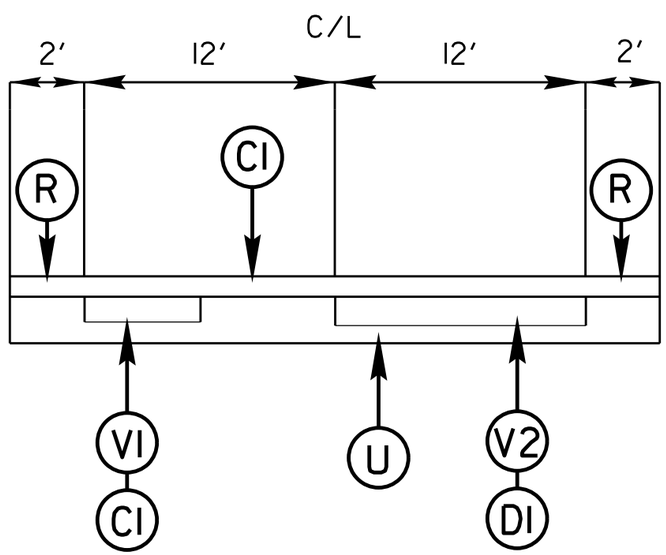

SURFACING SCHEDULE

ITEM NO	DESCRIPTION
C1	PROP. APPROX. 1 1/2" ASPHALT CONCRETE SURFACE COURSE, TYPE S9.5B, AT AN AVERAGE RATE OF 168 LBS. PER SQ. YD
D1	PROP. APPROX. 3" ASPHALT CONCRETE INTERMEDIATE COURSE, TYPE I19.OB,AT A AVERAGE RATE OF 342 LBS PER SQ. YD.
R	MILLED RUMBLE STRIPS
U	EXISTING ASPHALT
V1	MILLED ASPHALT PAVEMENT 1 1/2 " IN DEPTH IN LOCATIONS AS DIRECTED BY PROJECT ENGINEER
V2	MILLED ASPHALT PAVEMENT 3" IN DEPTH IN LOCATIONS AS DIRECTED BY PROJECT ENGINEER