09/08/99

TIP PROJECT: 17BP.14.R.15

CONTRACT: DN00148

See Sheet 1-A For Index of Sheets
See Sheet 1-B For Conventional Symbols
See Sheet 1-C For Survey Control Sheet

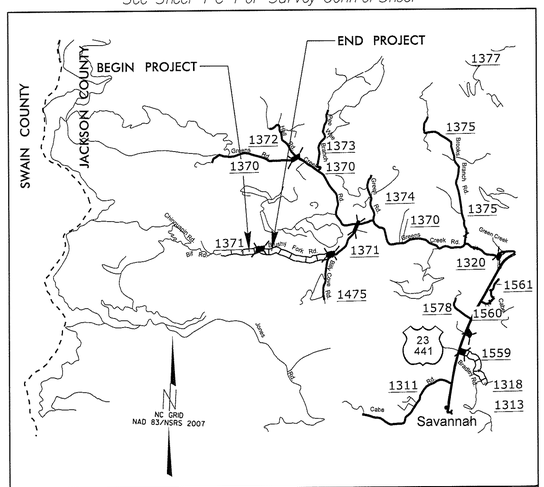

VICINITY MAP

STATE OF NORTH CAROLINA
DIVISION OF HIGHWAYS

JACKSON COUNTY

LOCATION: BRIDGE NO. 300 ON SR 1371 (BRUSHY FORK RD) OVER BRUSHY FORK CREEK.

TYPE OF WORK: GRADING, DRAINAGE, PAVING AND STRUCTURE.

STATE	STATE PROJECT REFERENCE NO.	SHEET NO.	TOTAL SHEETS
N.C.	17BP.14.R.15	1	

STATE PROJ. NO.	F.A. PROJ. NO.	DESCRIPTION
17BP.14.R.15		PE, R/W
17BP.14.R.15		CONST.

Prepared in the Office of: AECOM
NC FIRM LICENSE No: F-0342
701 Corporate Center Drive, Suite 475
Raleigh, NC 27607
(919) 854-6200 - (919) 854-6259(FAX)

Prepared in the Office of: Ecological Engineering LLP
NC FIRM LICENSE No: F-1148
128 Raleigh Street
Holly Springs, NC 27540
(919) 557-0929

NC GRID
NAD 83/NSRS 2007

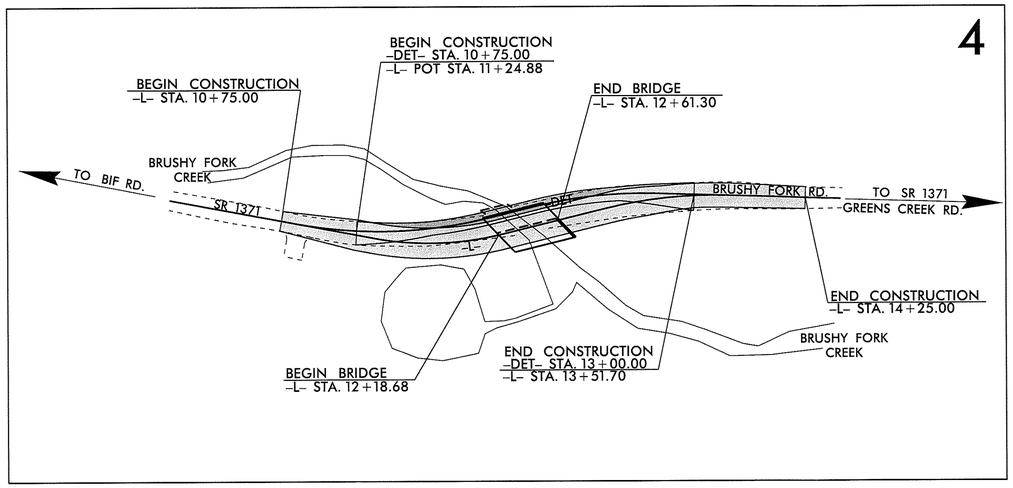

GRAPHIC SCALES

50 25 0 50 100
PLANS

50 25 0 50 100
PROFILE (HORIZONTAL)

10 5 0 10 20
PROFILE (VERTICAL)

DESIGN DATA

ADT 2010 = 280 VPD
V = 25 MPH

FUNC CLASS =
LOCAL RURAL
SUB-REGIONAL TIER

PROJECT LENGTH

LENGTH ROADWAY STATE PROJECT 17BP.14.R.15 = 0.058 MILES
LENGTH STRUCTURES STATE PROJECT 17BP.14.R.15 = 0.008 MILES
TOTAL LENGTH STATE PROJECT 17BP.14.R.15 = 0.066 MILES

NCDOT CONTACT: JOSHUA DEYTON, PE
PROJECT ENGINEER

Prepared In the Office of:
SUMMIT DESIGN AND ENGINEERING SERVICES
NC FIRM LICENSE No: P-0339
504 Meadowlands Drive
Hillsborough, NC 27278
(919) 732-3883 - (919) 732-6676 (FAX)

2012 STANDARD SPECIFICATIONS

RIGHT OF WAY DATE:
JULY 25, 2012

LETTING DATE:
JUNE 25, 2013

TRACY N. PARROTT, PE
PROJECT ENGINEER

BRANDON W. JOHNSON, PE
PROJECT DESIGN ENGINEER

HYDRAULICS ENGINEER
NORTH CAROLINA PROFESSIONAL SEAL 25506 ENGINEER JENNY SUMMERLIN FLEMING
SIGNATURE: P.E. 6/5/13

ROADWAY DESIGN ENGINEER
NORTH CAROLINA PROFESSIONAL SEAL 034371 ENGINEER BRANDON W. JOHNSON
SIGNATURE: P.E. 6/5/13

STATE OF NORTH CAROLINA DEPARTMENT OF TRANSPORTATION

04-JUN-2013 16:37
N:\Infrastructure Jobs\2012 Projects\II- AECOM Jackson County Bridges\BR-300\Current Drawings\300_Rdy_1tsh.dgn
$$$$USERNAME$$$$

PROJECT REFERENCE NO.	SHEET NO.
17BP.14.R.15	1-A

ROADWAY DESIGN ENGINEER

NORTH CAROLINA PROFESSIONAL SEAL 034371 ENGINEER BRANDON W. JOHNSON

Prepared in the Office of: SUMMIT DESIGN AND ENGINEERING SERVICES
NC FIRM LICENSE No: P-0339
504 Meadowlands Drive
Hillsborough, NC 27278
(919) 732-3883 - (919) 732-6676 (FAX)

INDEX OF SHEETS

SHEET NUMBER	SHEET
1	TITLE SHEET
1-A	INDEX OF SHEETS, GENERAL NOTES, AND LIST OF STANDARD DRAWINGS
1-B	CONVENTIONAL SYMBOLS
1-C	SURVEY CONTROL SHEET
2 THRU 2A	PAVEMENT SCHEDULE, TYPICAL SECTIONS, AND WEDGING DETAILS
3	SUMMARY OF QUANTITIES
3A	SUMMARY OF GUARDRAIL, SUMMARY OF DRAINAGE QUANTITIES AND EARTHWORK SUMMARY
4 THRU 5	PLAN PROFILE SHEET
TMP-1 THRU TMP-4	TRAFFIC MANAGEMENT PLANS
EC-1 THRU EC-6	EROSION CONTROL PLANS
UO-1	UTILITIES BY OTHERS PLANS
X-1A	CROSS-SECTIONS
X-1 THRU X-17	CROSS-SECTIONS
TS-01	STRUCTURE PLANS TITLE SHEET
S-01 THRU S-19	STRUCTURE PLANS
SN	STRUCTURE PLANS - STANDARD NOTES SHEET

GENERAL NOTES:

2012 SPECIFICATIONS
EFFECTIVE: 01-17-12
REVISED: 07/30/12

GRADING AND SURFACING OR RESURFACING AND WIDENING:

THE GRADE LINES SHOWN DENOTE THE FINISHED ELEVATION OF THE PROPOSED SURFACING AT GRADE POINTS SHOWN ON THE TYPICAL SECTIONS. WHERE NO GRADE LINES ARE SHOWN, THE PROFILES SHOWN DENOTE THE TOP ELEVATION OF THE EXISTING PAVEMENT ALONG THE CENTER LINE OF SURVEY ON WHICH THE PROPOSED RESURFACING WILL BE PLACED. GRADE LINES MAY BE ADJUSTED BY THE ENGINEER IN ORDER TO SECURE A PROPER TIE-IN.

CLEARING:

CLEARING ON THIS PROJECT SHALL BE PERFORMED TO THE LIMITS ESTABLISHED BY METHOD II.

SUPERELEVATION:

ALL CURVES ON THIS PROJECT SHALL BE SUPERELEVATED IN ACCORDANCE WITH STD. NO. 225.04 USING THE RATE OF SUPERELEVATION AND RUNOFF SHOWN ON THE PLANS. SUPERELEVATION IS TO BE REVOLVED ABOUT THE GRADE POINTS SHOWN ON THE TYPICAL SECTIONS.

SHOULDER CONSTRUCTION:

ASPHALT, EARTH, AND CONCRETE SHOULDER CONSTRUCTION ON THE HIGH SIDE OF SUPERELEVATED CURVES SHALL BE IN ACCORDANCE WITH STD. NO. 560.01.

SIDE ROADS:

THE CONTRACTOR WILL BE REQUIRED TO DO ALL NECESSARY WORK TO PROVIDE SUITABLE CONNECTIONS WITH ALL ROADS, STREETS, AND DRIVES ENTERING THIS PROJECT. THIS WORK WILL BE PAID FOR AT THE CONTRACT UNIT PRICE FOR THE PARTICULAR ITEMS INVOLVED.

GUARDRAIL:

THE GUARDRAIL LOCATIONS SHOWN ON THE PLANS MAY BE ADJUSTED DURING CONSTRUCTION AS DIRECTED BY THE ENGINEER. THE CONTRACTOR SHOULD CONSULT WITH THE ENGINEER PRIOR TO ORDERING GUARDRAIL MATERIAL.

TEMPORARY SHORING:

SHORING REQUIRED FOR THE MAINTENANCE OF TRAFFIC WILL BE PAID FOR AS "EXTRA WORK" IN ACCORDANCE WITH SECTION 104-7.

SUBSURFACE PLANS:

NO SUBSURFACE PLANS ARE AVAILABLE ON THIS PROJECT. THE CONTRACTOR SHOULD MAKE HIS OWN INVESTIGATION AS TO THE SUBSURFACE CONDITIONS.

END BENTS:

THE ENGINEER SHALL CHECK THE STRUCTURE END BENT PLANS, DETAILS, AND CROSS-SECTION PRIOR TO SETTING OF THE SLOPE STAKES FOR THE EMBANKMENT OR EXCAVATION APPROACHING A BRIDGE.

UTILITIES:

UTILITY OWNERS ON THIS PROJECT ARE FRONTIER COMMUNICATIONS AND DUKE POWER.

ANY RELOCATION OF EXISTING UTILITIES WILL BE ACCOMPLISHED BY OTHERS.

RIGHT-OF-WAY MARKERS:

ALL RIGHT-OF-WAY MARKERS ON THIS PROJECT SHALL BE PLACED BY OTHERS.

2012 ROADWAY ENGLISH STANDARD DRAWINGS

The following Roadway Standards as appear in "Roadway Standard Drawings" Highway Design Branch - N. C. Department of Transportation - Raleigh, N. C., Dated January, 2012 are applicable to this project and by reference hereby are considered a part of these plans:

STD.NO.	TITLE
DIVISION 2 - EARTHWORK	
200.02	Method of Clearing - Method II
225.02	Guide for Grading Subgrade - Secondary and Local
225.04	Method of Obtaining Superelevation - Two Lane Pavement
DIVISION 3 - PIPE CULVERTS	
300.01	Method of Pipe Installation
310.10	Driveway Pipe Construction
DIVISION 4 - MAJOR STRUCTURES	
422.11	Reinforced Bridge Approach Fills - Sub Regional Tier
DIVISION 5 - SUBGRADE, BASES AND SHOULDERS	
560.01	Method of Shoulder Construction - High Side of Superelevated Curve - Method 1
DIVISION 8 - INCIDENTALS	
862.01	Guardrail Placement
862.02	Guardrail Installation
862.03	Structure Anchor Units
876.01	Rip Rap in Channels
876.02	Guide for Rip Rap at Pipe Outlets

6/17/99
15-FEB-2013 10:30
J:\YNP_PECOM Jackson County Bridges\BR-300\Current Drawings\300_Rdy_tsh_1A.dgn
$$$$USERNAME$$$$

PROJECT REFERENCE NO.	SHEET NO.
17BP.14.R.15	1C
Location and Surveys	

SURVEY CONTROL SHEET 49–0300
–FINAL–

BL

POINT	DESC.	NORTH	EAST	ELEVATION	L STATION	OFFSET
1	BL-1	598132.1040	720518.6450	2420.96	10+26.08	6.92 RT
2	BL-2	598140.0460	720685.1250	2412.17	11+92.01	4.06 RT
3	BL-3	598204.9720	720906.7110	2408.88	14+25.10	6.11 RT

BM1 ELEVATION = 2423.24
N 598188 E 720520
L STATION 10+27.00 49 LEFT
8 INCH SPIKE SET IN ROOT OF 15 INCH POPLAR

BM2 ELEVATION = 2422.20
N 598272 E 721041
L STATION 14+48.00
N 62°59'13.68" E DIST 126.01
8 INCH SPIKE SET IN 15 INCH WHITE OAK

-FINAL- ROW MARKER IRON PIN AND CAP-E

ALIGN	STATION	OFFSET	NORTH	EAST
L	10+75.00	-9.00	598147.2526	720567.8093
L	10+75.00	-15.00	598153.2518	720567.9041
L	10+92.00	-15.00	598152.9833	720584.9020
L	11+24.00	-17.50	598154.9775	720616.9375
L	12+00.00	-25.00	598170.0599	720684.3802
L	12+22.09	-25.00	598176.7758	720702.4925
L	12+92.24	-25.00	598204.7593	720766.8253
L	13+25.00	-25.00	598217.1111	720800.0735
L	13+25.00	-20.00	598212.3360	720801.5564
L	13+73.31	-20.00	598223.5992	720851.7857
L	14+25.00	-20.00	598230.8155	720902.9680
L	14+25.00	-9.00	598219.9232	720904.5037
L	14+25.00	9.00	598202.0995	720907.0167
L	14+25.00	25.00	598186.2562	720909.2505
L	13+73.31	25.00	598179.0399	720858.0681
L	12+92.24	25.00	598158.9091	720786.7693
L	12+22.09	25.00	598130.9256	720722.4365
L	11+36.87	25.00	598112.2795	720629.1346
L	10+75.00	9.00	598129.2548	720567.5250

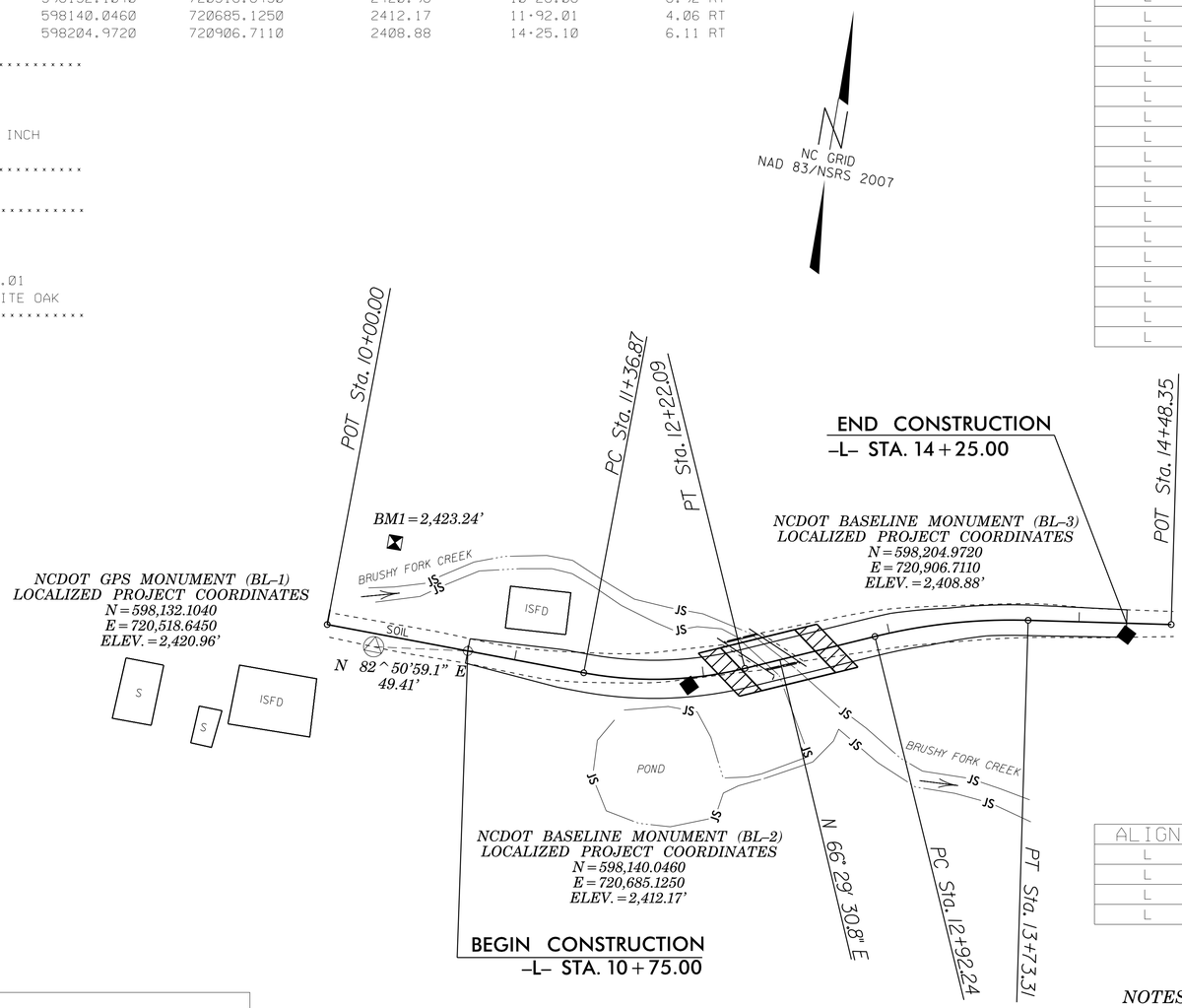

FINAL -L-

TYPE	STATION	NORTH	EAST
POT	10+00.00	598139.4384	720492.6765
PC	11+36.87	598137.2764	720629.5295
PT	12+22.09	598153.8507	720712.4645
PC	12+92.24	598181.8342	720776.7973
PT	13+73.31	598203.7951	720854.5779
POT	14+48.35	598214.2714	720928.8829

-FINAL- PDE MARKER PERMANENT EASEMENT-E

ALIGN	STATION	OFFSET	NORTH	EAST
L	13+48.00	25.00	598174.8359	720835.2570
L	13+48.00	35.00	598165.0867	720837.4826
L	13+65.00	35.00	598168.0123	720852.2095
L	13+65.00	25.00	598177.8719	720850.5396

DATUM DESCRIPTION

THE LOCALIZED COORDINATE SYSTEM DEVELOPED FOR THIS PROJECT IS BASED ON THE STATE PLANE COORDINATES ESTABLISHED BY NCDOT FOR MONUMENT "490300 (BL-1)"
WITH NAD 83/NSRS 2007 STATE PLANE GRID COORDINATES OF
NORTHING: 598132.1040(ft) EASTING: 720518.6450(ft)
ELEVATION: 2420.96(ft)
THE AVERAGE COMBINED GRID FACTOR USED ON THIS PROJECT (GROUND TO GRID) IS: 0.999762164
THE N.C. LAMBERT GRID BEARING AND LOCALIZED HORIZONTAL GROUND DISTANCE FROM "490300 (BL-1)" TO -L- STATION 10+75.00 IS
N 82°50'59.1" E 49.41'
ALL LINEAR DIMENSIONS ARE LOCALIZED HORIZONTAL DISTANCES
VERTICAL DATUM USED IS NAVD 88

NOTES:

1. *THE CONTROL DATA FOR THIS PROJECT CAN BE FOUND ELECTRONICALLY BY SELECTING PROJECT CONTROL DATA AT:*
HTTPS://CONNECT.NCDOT.GOV/RESOURCES/LOCATION/

THE FILES TO BE FOUND ARE AS FOLLOWS:
49–0300_LS_CONTROL.TXT

SITE CALIBRATION INFORMATION HAS NOT BEEN PROVIDED FOR THIS PROJECT. IF FURTHER INFORMATION IS NEEDED, PLEASE CONTACT THE LOCATION AND SURVEYS UNIT.

INDICATES GEODETIC CONTROL MONUMENTS USED OR SET FOR HORIZONTAL PROJECT CONTROL BY THE NCDOT LOCATION AND SURVEYS UNIT.
PROJECT CONTROL ESTABLISHED USING GLOBAL POSITIONING SYSTEM.

GEOID MODEL – G09NC
NOTE: DRAWING NOT TO SCALE

6/2/99
04-JUN-2013 16:18
N:\Project Future Jobs\2012 Projects\11 - AECOM Jackson County Bridges\BR-300\Current Drawings\490300_ls_1c.dgn
$$$$USERNAME$$$$

04/16/11

PROJECT REFERENCE NO.	SHEET NO.
I7BPJ4.RJ5	1-B

Note: Not to Scale

****S.U.E. = Subsurface Utility Engineering***

STATE OF NORTH CAROLINA
DIVISION OF HIGHWAYS

CONVENTIONAL PLAN SHEET SYMBOLS

BOUNDARIES AND PROPERTY:

- State Line
- County Line
- Township Line
- City Line
- Reservation Line
- Property Line
- Existing Iron Pin — EIP
- Property Corner
- Property Monument — ECM
- Parcel/Sequence Number — 123
- Existing Fence Line
- Proposed Woven Wire Fence
- Proposed Chain Link Fence
- Proposed Barbed Wire Fence
- Existing Wetland Boundary — WLB
- Proposed Wetland Boundary — WLB
- Existing Endangered Animal Boundary — EAB
- Existing Endangered Plant Boundary — EPB
- Known Soil Contamination: Area or Site
- Potential Soil Contamination: Area or Site

BUILDINGS AND OTHER CULTURE:

- Gas Pump Vent or U/G Tank Cap
- Sign — S
- Well — W
- Small Mine
- Foundation
- Area Outline
- Cemetery
- Building
- School
- Church
- Dam

HYDROLOGY:

- Stream or Body of Water
- Hydro, Pool or Reservoir
- Jurisdictional Stream — JS
- Buffer Zone 1 — BZ 1
- Buffer Zone 2 — BZ 2
- Flow Arrow
- Disappearing Stream
- Spring
- Wetland
- Proposed Lateral, Tail, Head Ditch — FLOW
- False Sump

RAILROADS:

- Standard Gauge — CSX TRANSPORTATION
- RR Signal Milepost — MILEPOST 35
- Switch — SWITCH
- RR Abandoned
- RR Dismantled

RIGHT OF WAY:

- Baseline Control Point
- Existing Right of Way Marker
- Existing Right of Way Line
- Proposed Right of Way Line — RW
- Proposed Right of Way Line with Iron Pin and Cap Marker — RW
- Proposed Right of Way Line with Concrete or Granite R/W Marker — RW
- Proposed Control of Access Line with Concrete C/A Marker — CA
- Existing Control of Access — CA
- Proposed Control of Access — CA
- Existing Easement Line — E
- Proposed Temporary Construction Easement — E
- Proposed Temporary Drainage Easement — TDE
- Proposed Permanent Drainage Easement — PDE
- Proposed Permanent Drainage / Utility Easement — DUE
- Proposed Permanent Utility Easement — PUE
- Proposed Temporary Utility Easement — TUE
- Proposed Aerial Utility Easement — AUE
- Proposed Permanent Easement with Iron Pin and Cap Marker

ROADS AND RELATED FEATURES:

- Existing Edge of Pavement
- Existing Curb
- Proposed Slope Stakes Cut — C
- Proposed Slope Stakes Fill — F
- Proposed Curb Ramp — CR
- Existing Metal Guardrail
- Proposed Guardrail
- Existing Cable Guiderail
- Proposed Cable Guiderail
- Equality Symbol
- Pavement Removal

VEGETATION:

- Single Tree
- Single Shrub
- Hedge
- Woods Line
- Orchard
- Vineyard — Vineyard

EXISTING STRUCTURES:

MAJOR:

- Bridge, Tunnel or Box Culvert — CONC
- Bridge Wing Wall, Head Wall and End Wall — CONC WW

MINOR:

- Head and End Wall — CONC HW
- Pipe Culvert
- Footbridge
- Drainage Box: Catch Basin, DI or JB — CB
- Paved Ditch Gutter
- Storm Sewer Manhole — S
- Storm Sewer — S

UTILITIES:

POWER:

- Existing Power Pole
- Proposed Power Pole
- Existing Joint Use Pole
- Proposed Joint Use Pole
- Power Manhole — P
- Power Line Tower
- Power Transformer
- U/G Power Cable Hand Hole
- H-Frame Pole
- Recorded U/G Power Line — P
- Designated U/G Power Line (S.U.E.*) — P

TELEPHONE:

- Existing Telephone Pole
- Proposed Telephone Pole
- Telephone Manhole — T
- Telephone Booth
- Telephone Pedestal — T
- Telephone Cell Tower
- U/G Telephone Cable Hand Hole — HH
- Recorded U/G Telephone Cable — T
- Designated U/G Telephone Cable (S.U.E.*) — T
- Recorded U/G Telephone Conduit — TC
- Designated U/G Telephone Conduit (S.U.E.*) — TC
- Recorded U/G Fiber Optics Cable — T FO
- Designated U/G Fiber Optics Cable (S.U.E.*) — T FO

WATER:

- Water Manhole — W
- Water Meter
- Water Valve
- Water Hydrant
- Recorded U/G Water Line
- Designated U/G Water Line (S.U.E.*)
- Above Ground Water Line — A/G Water

TV:

- TV Satellite Dish
- TV Pedestal — C
- TV Tower
- U/G TV Cable Hand Hole — HH
- Recorded U/G TV Cable — TV
- Designated U/G TV Cable (S.U.E.*) — TV
- Recorded U/G Fiber Optic Cable — TV FO
- Designated U/G Fiber Optic Cable (S.U.E.*) — TV FO

GAS:

- Gas Valve
- Gas Meter
- Recorded U/G Gas Line — G
- Designated U/G Gas Line (S.U.E.*) — G
- Above Ground Gas Line — A/G Gas

SANITARY SEWER:

- Sanitary Sewer Manhole
- Sanitary Sewer Cleanout
- U/G Sanitary Sewer Line — SS
- Above Ground Sanitary Sewer — A/G Sanitary Sewer
- Recorded SS Forced Main Line — FSS
- Designated SS Forced Main Line (S.U.E.*) — FSS

MISCELLANEOUS:

- Utility Pole
- Utility Pole with Base
- Utility Located Object
- Utility Traffic Signal Box — S
- Utility Unknown U/G Line — ?UTL
- U/G Tank; Water, Gas, Oil
- Underground Storage Tank, Approx. Loc. — UST
- A/G Tank; Water, Gas, Oil
- Geoenvironmental Boring
- U/G Test Hole (S.U.E.*)
- Abandoned According to Utility Records — AATUR
- End of Information — E.O.I.

6/2/99

PROJECT REFERENCE NO.	SHEET NO.
17BP.14.R.15	2
ROADWAY DESIGN ENGINEER	PAVEMENT DESIGN ENGINEER

NORTH CAROLINA PROFESSIONAL SEAL 034371 ENGINEER BRANDON W. JOHNSON

Prepared in the Office of: SUMMIT DESIGN AND ENGINEERING SERVICES
NC FIRM LICENSE No: F-0339
504 Meadowlands Drive
Hillsborough, NC 27278
(919) 732-3883 – (919) 732-6676 (FAX)

PAVEMENT SCHEDULE

C1	PROP. APPROX. 3" ASPHALT CONCRETE SURFACE COURSE, TYPE S9.5B, AT AN AVERAGE RATE OF 168 LBS. PER SQ. YD. IN EACH OF TWO LAYERS.
C2	PROP. APPROX. 1.5" ASPHALT CONCRETE SURFACE COURSE, TYPE S9.5B, AT AN AVERAGE RATE OF 168 LBS. PER SQ. YD.
E	PROP. APPROX. 5" ASPHALT CONCRETE BASE COURSE, TYPE B25.0, AT AN AVERAGE RATE OF 570 LBS. PER SQ. YD.
J1	6" AGGREGATE BASE
T	EARTH MATERIAL.
U	EXISTING PAVEMENT

NOTE: PAVEMENT EDGE SLOPES ARE 1:1 UNLESS SHOWN OTHERWISE.

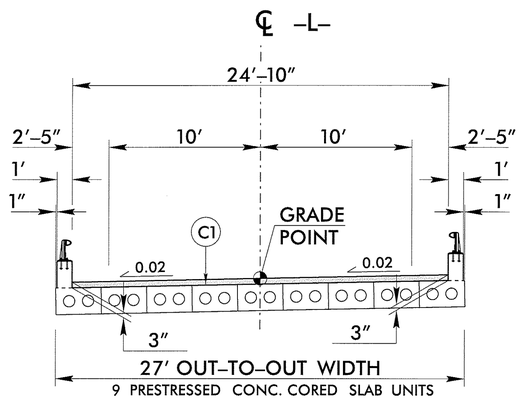

BRIDGE TYPICAL SECTION

FOR BRIDGE OVER BRUSHY CREEK ROAD

USE BRIDGE TYPICAL SECTION

–L– STA 12+18.68 (BEG BRIDGE) TO STA 12+61.30 (END BRIDGE)

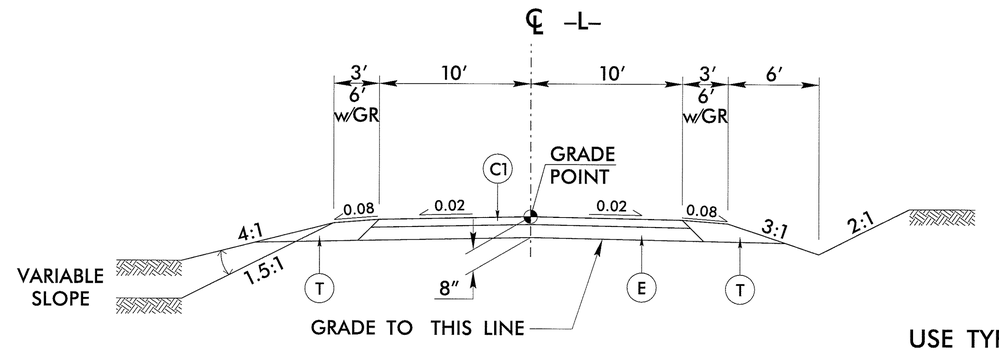

TYPICAL SECTION NO. 1

–L– (BRUSHY CREEK RD)

USE TYPICAL SECTION NO. 1

–L– STA 10+75.00 TO STA 12+18+.68 (BEG BRIDGE)
–L– STA 12+53.51 LT (END BRIDGE) TO STA 13+02.21 LT
–L– STA 12+69.09 RT (END BRIDGE) TO STA 13+17.79 RT

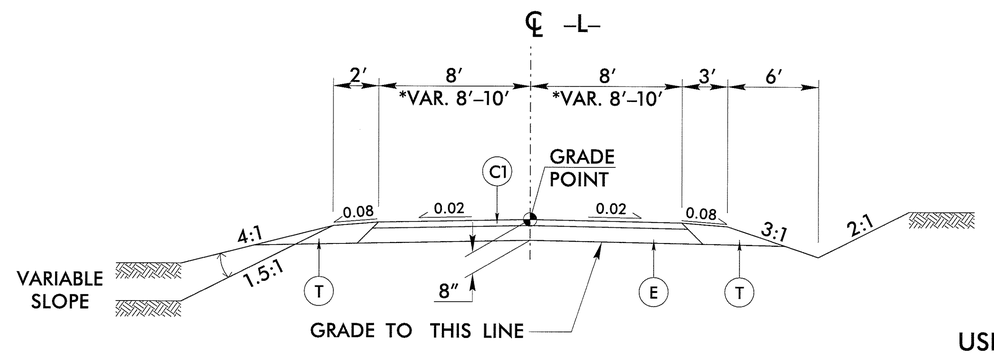

TYPICAL SECTION NO. 2

–L– (BRUSHY CREEK RD)

USE TYPICAL SECTION NO. 2

*–L– STA 13+02.21 LT TO STA 13+32.21 LT
*–L– STA 13+17.79 RT TO STA 13+47.79 RT
–L– STA 13+32.21 LT TO STA 14+25.00 LT
–L– STA 13+47.79 RT TO STA 14+25.00 RT

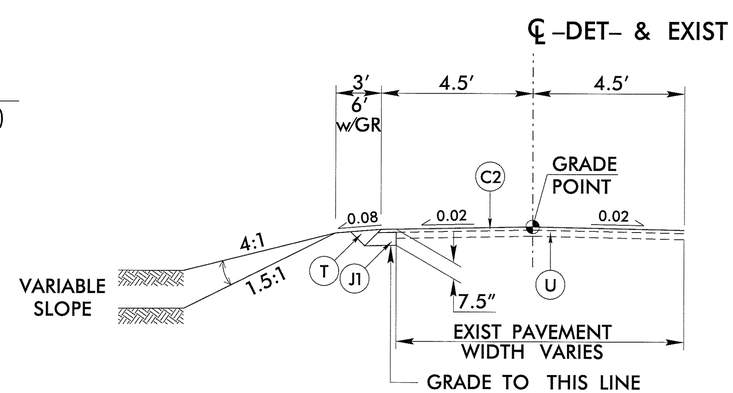

TYPICAL SECTION NO. 3

–DET–

USE TYPICAL SECTION NO. 3

–DET– STA 10+75.00 TO STA 13+00.00

15-FEB-2013 10:36
J:\11_GEOTECH\Jackson County Bridges\BR-300\Current Drawings\300_Rdy_typ.dgn
$$$$USERNAME$$$$

PROJECT REFERENCE NO.	SHEET NO.
17BP.14.R.15	2A

ROADWAY DESIGN ENGINEER

NORTH CAROLINA PROFESSIONAL SEAL 034371 ENGINEER BRANDON W. JOHNSON

Prepared in the Office of: SUMMIT DESIGN AND ENGINEERING SERVICES
NC FIRM LICENSE No: P-0339
501 Meadowlands Drive
Hillsborough, NC 27278
(919) 732-3883 • (919) 732-6676 (FAX)

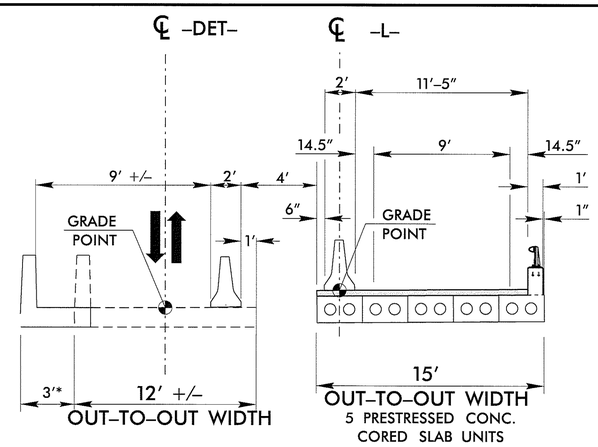

STAGES 0–2

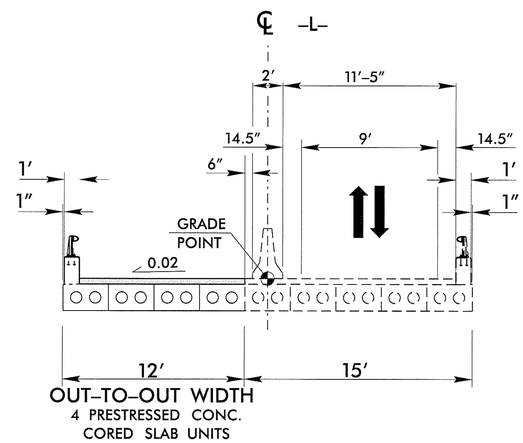

STAGES 3–4

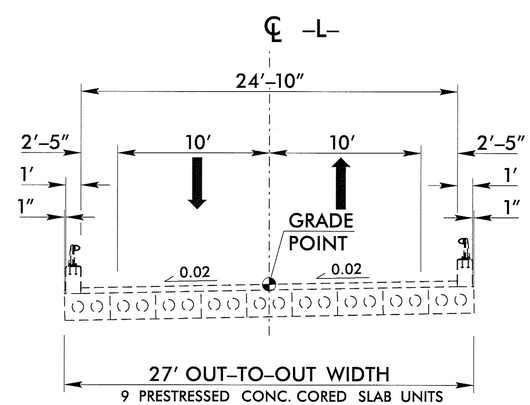

STAGE 5

*EXISTING BRIDGE TO BE WIDENED BY OTHERS.

NOTE: FOR DETAILED STAGING PLANS SEE SHEETS S–04 THRU S–05.

6/2/99
15-FEB-2013 10:38
J:\IT - AECOM\Jackson County Bridges\BR-300\Current Drawings\300_Rdy_dtl_2b.dgn
$$$$USERNAME$$$$

PROJECT REFERENCE NO.	SHEET NO.
17BP.14.R.15	3

Prepared in the Office of: SUMMIT DESIGN AND ENGINEERING SERVICES
NC FIRM LICENSE No: P-0339
504 Meadowlands Drive
Hillsborough, NC 27278
(919) 732-3883 - (919) 732-6676 (FAX)

STATE OF NORTH CAROLINA
DIVISION OF HIGHWAYS

SUMMARY OF QUANTITIES

STATE OF NORTH CAROLINA
DIVISION OF HIGHWAYS
ROADWAY SUMMARY OF QUANTITIES FOR CONTRACT - DN00148

ITEM NUMBER	SEC#	QUANTITIY	UNIT	DESCRIPTION
0000100000-N	800	1	LS	MOBILIZATION
0000400000-N	801	1	LS	CONSTRUCTION SURVEYING
0030000000-N	SP	1	LS	BRIDGE APPROACH FILL - SUBREGIONAL TIER AT STATION 12+40
0008000000-E	200	1	ACR	SUPPLEMENTARY CLEARING & GRUBBING
0036000000-E	225	50.00	CY	UNDERCUT EXCAVATION
0043000000-N	226	1	LS	GRADING
		0.10	AC	CLEARING AND GRUBBING
		80	CY	UNCLASSIFIED EXCAVATION
		170	CY	BORROW EXCAVATION
		80	CY	SHOULDER BORROW
		640	SY	FINE GRADING
		260	SY	REMOVAL OF EXISTING ASPHALT PAVEMENT
0195000000-E	265	50.00	CY	SELECT GRANULAR MATERIAL
0196000000-E	270	50.00	SY	GEOTEXTILE SOIL STABILIZATION
0318000000-E	300	10.00	TON	FOUNDATION CONDITIONING MATERIAL, MINOR STRUCTURES
0320000000-E	300	20.00	SY	FOUNDATION CONDITIONING GEOTEXTILE
0588000000-E	310	32.00	LF	18" CS PIPE CULVERTS (0.064" THICK)
0995000000-E	340	28.00	LF	PIPE REMOVAL
1099700000-E	505	50.00	TON	CLASS IV SUBGRADE STABILIZATION
1121000000-E	520	100.00	TON	AGGREGATE BASE COURSE
1220000000-E	545	50.00	TON	INCIDENTAL STONE BASE
1489000000-E	610	170.00	TON	ASPHALT CONC BASE COURSE, TYPE B25.0B
1519000000-E	610	155.00	TON	ASPHALT CONC SURFACE COURSE, TYPE S9.5B
1575000000-E	620	20.00	TON	ASPHALT BINDER FOR PLANT MIX, PG 64-22
3030000000-E	862	25.00	LF	STEEL BEAM GUARDRAIL
3180000000-N	862	4	EA	GUARDRAIL ANCHOR UNITS, TYPE 350 (TL-2)
3215000000-N	862	4	EA	GUARDRAIL ANCHOR UNITS, TYPE III
3150000000-N	862	4	EA	ADDITIONAL GUARDRAIL POSTS
3572000000-E	867	125.00	LF	CHAIN LINK FENCE RESET
3649000000-E	876	2.00	TON	RIP RAP, CLASS B
3656000000-E	876	7.00	SY	GEOTEXTILE FOR DRAINGE
4400000000-E	1110	32.00	SF	WORK ZONE SIGNS (STATIONARY)
4405000000-E	1110	72.00	SF	WORK ZONE SIGNS (PORTABLE)
4430000000-N	1130	30	EA	DRUMS
4465000000-N	1160	2	EA	TEMPORARY CRASH CUSHIONS
4490000000-E	1170	40.00	LF	PORT CONCRETE BARRIER (ANCHORED)
4500000000-E	1170	20.00	LF	RESET PORTABLE CONCRETE BARRIER

ITEM NUMBER	SEC#	QUANTITIY	UNIT	DESCRIPTION
6000000000-E	1605	685.00	LF	TEMPORARY SILT FENCE
6009000000-E	1610	15.00	TON	EROSION CONTROL STONE, CLASS B
6012000000-E	1610	5.00	TON	SEDIMENT CONTROL STONE
6015000000-E	1615	1.50	ACR	TEMPORARY MULCHING
6018000000-E	1620	100.00	LB	SEED FOR TEMPORARY SEEDING
6021000000-E	1620	0.25	TON	FERTILIZER FOR TEMPORARY SEEDING
6024000000-E	1622	100.00	LF	TEMPORARY SLOPE DRAINS
6029000000-E	SP	100.00	LF	SAFETY FENCE
6030000000-E	1630	20.00	CY	SILT EXCAVATION
6036000000-E	1631	5000.00	SY	MATTING FOR EROSION CONTROL
6071010000-E	SP	35.00	LF	WATTLE
6071020000-E	SP	10.00	LB	POLYACRYLAMIDE (PAM)
6084000000-E	1660	3.00	AC	SEEDING AND MULCHING
6090000000-E	1661	50.00	LB	SEED FOR REPAIR SEEDING
6093000000-E	1661	0.25	TON	FERTILIZER FOR REPAIR SEEDING
6096000000-E	1662	50.00	LB	SEED FOR SUPPLEMENTAL SEEDING
6108000000-E	1665	1.25	TON	FERTILIZER TOPDRESSING
6117000000-N	SP	7	EA	RESPONSE FOR EROSION CONTROL
6123000000-E	1670	0.10	ACR	REFORESTATION
8035000000-N	402	1	LS	REMOVAL EXISTING STRUCTURE AT STATION 12+40
8112730000-N	450	1	LS	PDA TESTING
8119000000-E	412	1	LS	UNCLASSIFIED STRUCTURE EXCAVATION AT STATION 12+40
8182000000-E	420	27.60	CY	CLASS A CONCRETE (BRIDGE)
8210000000-N	422	1	LS	BRIDGE APPROACH SLABS, STATION 12+40
8217000000-E	425	4158.00	LBS	REINFORCING STEEL (BRIDGE)
8364000000-E	450	235.00	LF	HP12X53 STEEL PILES
8391000000-N	450	10	EA	STEEL PILE POINTS
8468000000-E	460	64.15	LF	ONE BAR METAL RAIL
8517000000-E	460	80	EA	1'-0" X 1'-9 3/4" CONCRETE PARAPET
8608000000-E	876	32.00	TON	RIP RAP CLASS II (2'-0" THICK)
8622000000-E	876	36.00	SY	GEOTEXTILE FOR DRAINAGE
8657000000-N	430	1	LS	ELASTOMERIC BEARINGS
8762000000-E	430	360.00	LF	3'-0"X 1'-9"PRESTRESSED CONCRETE CORED SLABS

5/28/99
04-JUN-2013 15:52
N:\Officewide Jobs\2012 Projects\11 - AECOM Jackson County Bridges\BR-300\Current Drawings\300_Rdy_sum3.dgn
$$$$USERNAME$$$$

PROJECT REFERENCE NO.	SHEET NO.
17BP.14.R.15	3A

Prepared in the Office of: SUMMIT DESIGN AND ENGINEERING SERVICES
NC FIRM LICENSE No: P-0339
504 Meadowlands Drive
Hillsborough, NC 27278
(919) 732-3883 - (919) 732-6676 (FAX)

STATE OF NORTH CAROLINA
DIVISION OF HIGHWAYS

APPROXIMATE QUANTITIES ONLY. UNCLASSIFIED EXCAVATION, BORROW EXCAVATION, SHOULDER BORROW, FINE GRADING, CLEARING AND GRUBBING, BREAKING OF EXISTING PAVEMENT AND REMOVAL OF EXISTING PAVEMENT WILL BE PAID FOR AT THE LUMP SUM PRICE FOR "GRADING".

"N" = DISTANCE FROM EDGE OF LANE TO FACE OF GUARDRAIL.
TOTAL SHOULDER WIDTH = DISTANCE FROM EDGE OF TRAVEL LANE TO SHOULDER BREAK POINT.
FLARE LENGTH = DISTANCE FROM LAST SECTION OF PARALLEL GUARDRAIL TO END OF GUARDRAIL.
W = TOTAL WIDTH OF FLARE FROM BEGINNING OF TAPER TO END OF GUARDRAIL.
G = GATING IMPACT ATTENUATOR TYPE 350
NG = NON-GATING IMPACT ATTENUATOR TYPE 350

GUARDRAIL SUMMARY

SURVEY LINE	BEG. STA.	END STA.	LOCATION	LENGTH STRAIGHT	LENGTH SHOP CURVED	LENGTH DOUBLE FACED	WARRANT POINT APPROACH END	WARRANT POINT TRAILING END	"N" DIST. FROM E.O.L.	TOTAL SHOUL. WIDTH	FLARE LENGTH APPROACH END	FLARE LENGTH TRAILING END	W APPROACH END	W TRAILING END	ANCHORS XI MOD	ANCHORS TYPE-III	ANCHORS GRAU 350 TL-2	ANCHORS M-350	ANCHORS XIII	ANCHORS CAT-1	ANCHORS VI MOD	ANCHORS BIC	ANCHORS AT-1	IMPACT ATTENUATOR TYPE 350 EA	G	NG	SINGLE FACED GUARDRAIL	REMOVE EXISTING GUARDRAIL	REMOVE AND STOCKPILE EXISTING GUARDRAIL	REMARKS
–L–	11+77.79	12+27.79	RT	6.25			11+77.79	12+27.79	3	6	25		0.5			1	1													
–L–	11+61.50	12+11.50	LT	6.25			11+61.50	12+11.50	3	6	25		0.5			1	1													
–L–	12+67.79	13+17.79	RT	6.25			12+67.79	13+17.79	3	6		25		0.5		1	1													
–L–	12+52.21	13+02.21	LT	6.25			12+52.21	13+02.21	3	6		25		0.5		1	1													
TOTALS				25												4	4													

LIST OF PIPES, ENDWALLS, ETC. (FOR PIPES 48" & UNDER)

STATION	LOCATION (LT,RT, OR CL)	STRUCTURE NO. FROM	STRUCTURE NO. TO	TOP ELEVATION	INVERT ELEVATION	INVERT ELEVATION	SLOPE CRITICAL	DRAINAGE PIPE (RCP, CSP, CAAP, HDPE, or PVC) 8"	12"	15"	18"	24"	30"	36"	42"	C.S. PIPE (UNLESS NOTED OTHRWISE) 12" .064	15" .064	18" .064	24" .064	24"	30" .079	30"	36" .079	36"	42" .109	42"	48" .109	48"
–L– 13+58	CL																											
–L– 13+59	CL				2406.5	2403.0												32										
TOTALS																		32										

STATION	CLASS III R.C. PIPE (UNLESS OTHERWISE NOTED) 12"	15"	18"	24"	30"	36"	42"	48"	15" SIDE DRAIN PIPE	18" SIDE DRAIN PIPE	24" SIDE DRAIN PIPE	ENDWALLS STD. 838.01, STD. 838.11 OR STD. 838.80 (UNLESS NOTED OTHERWISE) CU. YDS. R.C.P.	C.S.P.	QUANTITIES FOR DRAINAGE STRUCTURES * TOTAL L.F. FOR PAY QUANTITY SHALL BE COL. 'A' + (1.3 X COL.'B') PER EACH (0' THRU 5.0')	LIN. *FT. A 5.0' THRU 10.0'	LIN. *FT. B 10.0' AND ABOVE	C.B. STD. 840.01 OR STD. 840.02	FRAME, GRATES AND HOOD STANDARD 840.03 TYPE OF GRATE E	F	G		D.I. STD. 840.14 OR STD. 840.15	D.I. FRAME & GRATE STD. 840.16	G.D.I. TYPE "A" STD. 840.17 OR 840.26	G.D.I. TYPE "B" STD. 840.18 OR 840.27	G.D.I. TYPE "D" STD. 840.19 OR 840.28	G.D.I. FRAME WITH GRATE STD. 840.22	G.D.I. FRAME WITH TWO GRATES STD. 840.22	G.D.I. (N.S.) FRAME WITH GRATE STD. 840.24	G.D.I. (N.S.) FRAME WITH TWO GRATES STD. 840.24	J.B. STD. 840.31 OR 840.32								CORR. STEEL ELBOWS NO. & SIZE	CONC. COLLARS CL. "B" C.Y. STD 840.72	CONC. & BRICK PIPE PLUG, C.Y. STD. 840.71	PIPE REMOVAL LIN.FT.	REMARKS
–L– 13+58																																										28	REMOVE 18" CMP
–L– 13+59																																											
TOTALS																																										28	

ABBREVIATIONS

- C.B. CATCH BASIN
- N.D.I. NARROW DROP INLET
- D.I. DROP INLET
- G.D.I. GRATED DROP INLET
- G.D.I. (N.S.) GRATED DROP INLET (NARROW SLOT)
- J.B. JUNCTION BOX
- M.H. MANHOLE
- T.B.D.I. TRAFFIC BEARING DROP INLET
- T.B.J.B. TRAFFIC BEARING JUNCTION BOX

SUMMARY OF EARTHWORK
IN CUBIC YARDS

LOCATION	UNCLASSIFIED EXCAVATION	UNDERCUT	EMBT+15%	BORROW	WASTE
–L– STATION 10+75.00 TO 12+18.68	38 CU. YDS.		32 CU. YDS.		6 CU. YDS.
–L– STATION 12+61.30 TO 14+25.00	36 CU. YDS.		51 CU. YDS.	15 CU. YDS.	
–DET– STATION 10+00.00 TO 11+64+/–	3 CU. YDS.		1 CU. YDS.		2 CU. YDS.
–DET– STATION 11+83+/– TO 13+00.00	2 CU. YDS.		6 CU. YDS.	4 CU. YDS.	
SUB–TOTAL:	79 CU. YDS.	50 CU. YDS.	90 CU. YDS.	19 CU. YDS.	8 CU. YDS.
ESTIMATE 5% FOR TOPSOIL REPLACEMENT				8 CU. YDS.	
EMBANKMENT TO REPLACE UNDERCUT +15%		50 CU. YDS.		58 CU. YDS.	50 CU. YDS.
SUITABLE WASTE				8 CU. YDS.	
SHOULDER MATERIAL +15%				92 CU. YDS.	
GRAND TOTALS:	79 CU. YDS.			169 CU. YDS.	
SAY:	80 CU. YDS.			170 CU. YDS.	50 CU. YDS.

PROJECT REFERENCE NO.	SHEET NO.
17BP.14.R.15	4
R/W SHEET NO.	

ROADWAY DESIGN ENGINEER	HYDRAULICS ENGINEER
NORTH CAROLINA PROFESSIONAL SEAL 034371 ENGINEER BRANDON W. JOHNSON 10/31/13	NORTH CAROLINA PROFESSIONAL SEAL 25506 ENGINEER JENNIFER SUMMERLIN FLEMING 10/31/13

Prepared in the Office of: SUMMIT DESIGN AND ENGINEERING SERVICES — NC FIRM LICENSE No: P-0339, 504 Meadowlands Drive, Hillsborough, NC 27278, (919) 732-3883 - (919) 732-6676 (FAX)

Prepared in the Office of: Ecological Engineering — NC FIRM LICENSE No: F-148, 128 Raleigh Street, Holly Springs, NC 27540, (919) 557-0929

BRIDGE APPROACH SLAB

SEE SHEETS S-01 THRU S-19 FOR STRUCTURE PLANS

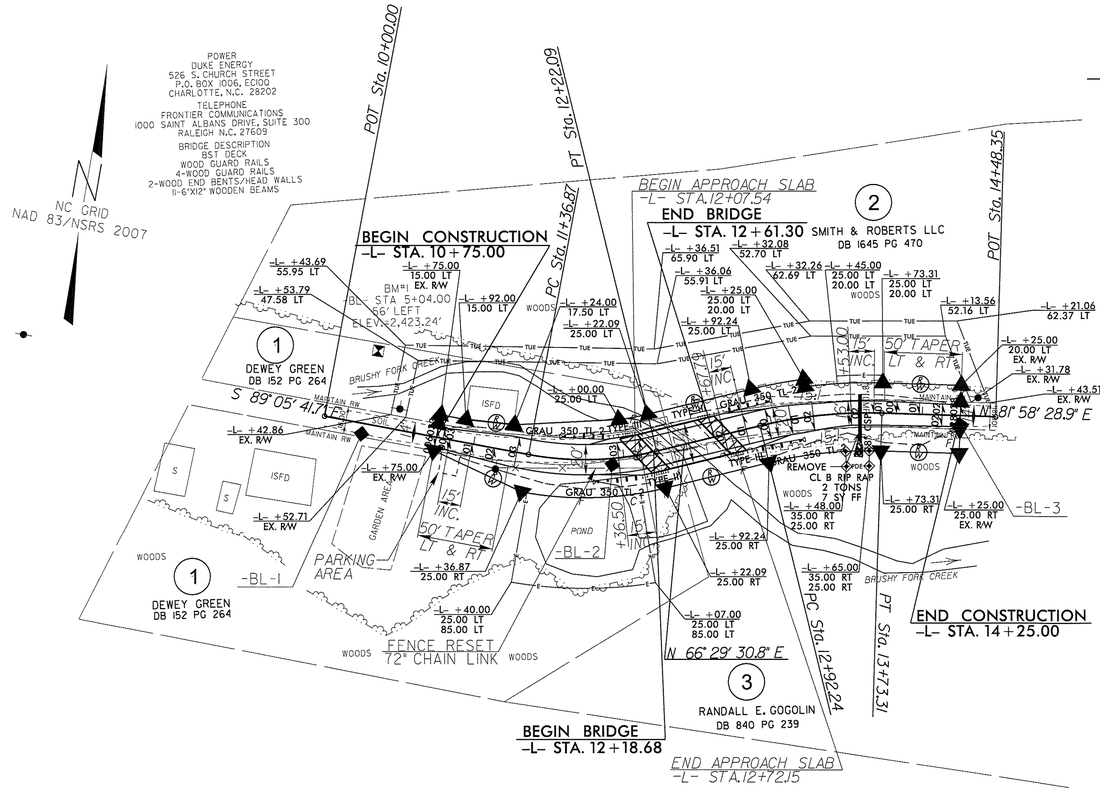

-L-

PI Sta 11+80.14	PI Sta 13+33.03
Δ = 24° 24' 47.5" (LT)	Δ = 15° 28' 58.1" (RT)
D = 28° 38' 52.4"	D = 19° 05' 54.9"
L = 85.22'	L = 81.07'
T = 43.27'	T = 40.78'
R = 200.00'	R = 300.00'
SE = 03	SE = 02
DS = 15mph	DS = 15mph
RO = 45'	RO = 30'

BM#2
-BL- STATION 8+98.00
N 63°40'08.8" E 150.00'
ELEV.=2,427.20'

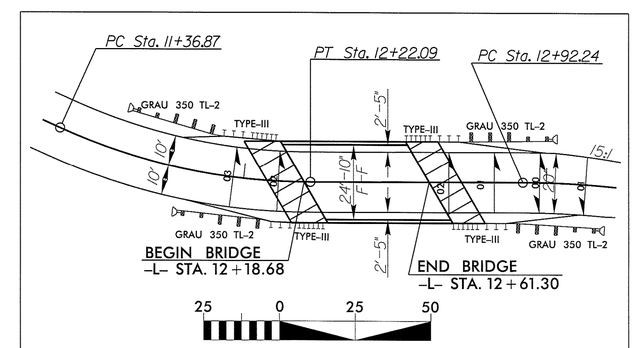

SKETCH SHOWING THE RELATIONSHIP OF THE BRIDGE TO THE PAVEMENT

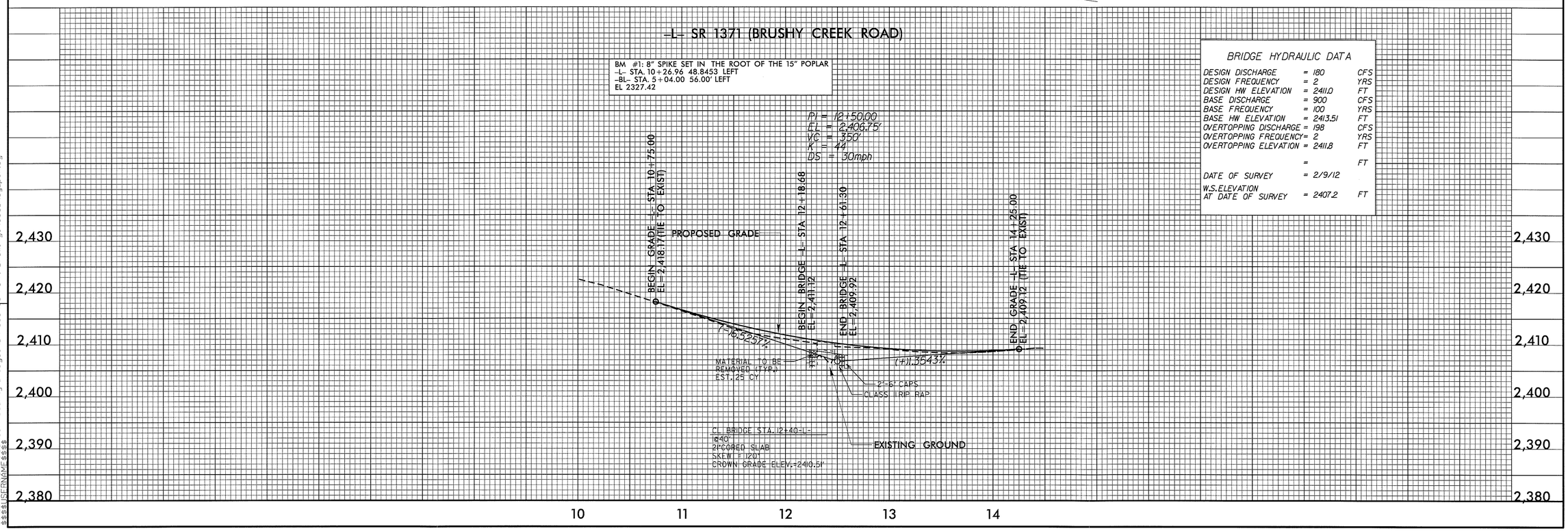

BRIDGE HYDRAULIC DATA

DESIGN DISCHARGE	= 180	CFS
DESIGN FREQUENCY	= 2	YRS
DESIGN HW ELEVATION	= 2411.0	FT
BASE DISCHARGE	= 900	CFS
BASE FREQUENCY	= 100	YRS
BASE HW ELEVATION	= 2413.51	FT
OVERTOPPING DISCHARGE	= 198	CFS
OVERTOPPING FREQUENCY	= 2	YRS
OVERTOPPING ELEVATION	= 2411.8	FT
	=	FT
DATE OF SURVEY	= 2/9/12	
W.S. ELEVATION AT DATE OF SURVEY	= 2407.2	FT

REVISIONS

8/17/99

15-FEB-2013 10:44
J:\11 - AECOM\Jackson County Bridges\BR-300\Current Drawings\300_Rdy_psh.dgn
$$$$USERNAME$$$$

PROJECT REFERENCE NO.	SHEET NO.
17BP.14.R.15	5
R/W SHEET NO.	

ROADWAY DESIGN ENGINEER: NORTH CAROLINA PROFESSIONAL SEAL 034371 ENGINEER BRANDON W. JOHNSON 6/5/13

HYDRAULICS ENGINEER: NORTH CAROLINA PROFESSIONAL SEAL 25506 ENGINEER JENNIFER SUMMERLIN FLEMING 6/5/13

Prepared in the Office of: SUMMIT DESIGN AND ENGINEERING SERVICES — NC FIRM LICENSE No: P-0339, 504 Meadowlands Drive, Hillsborough, NC 27278, (919) 732-3883 - (919) 732-9876 (FAX)

Prepared in the Office of: Ecological Engineering PLLC — NC FIRM LICENSE No: F-948, 128 Raleigh Street, Holly Springs, NC 27540, (919) 557-0929

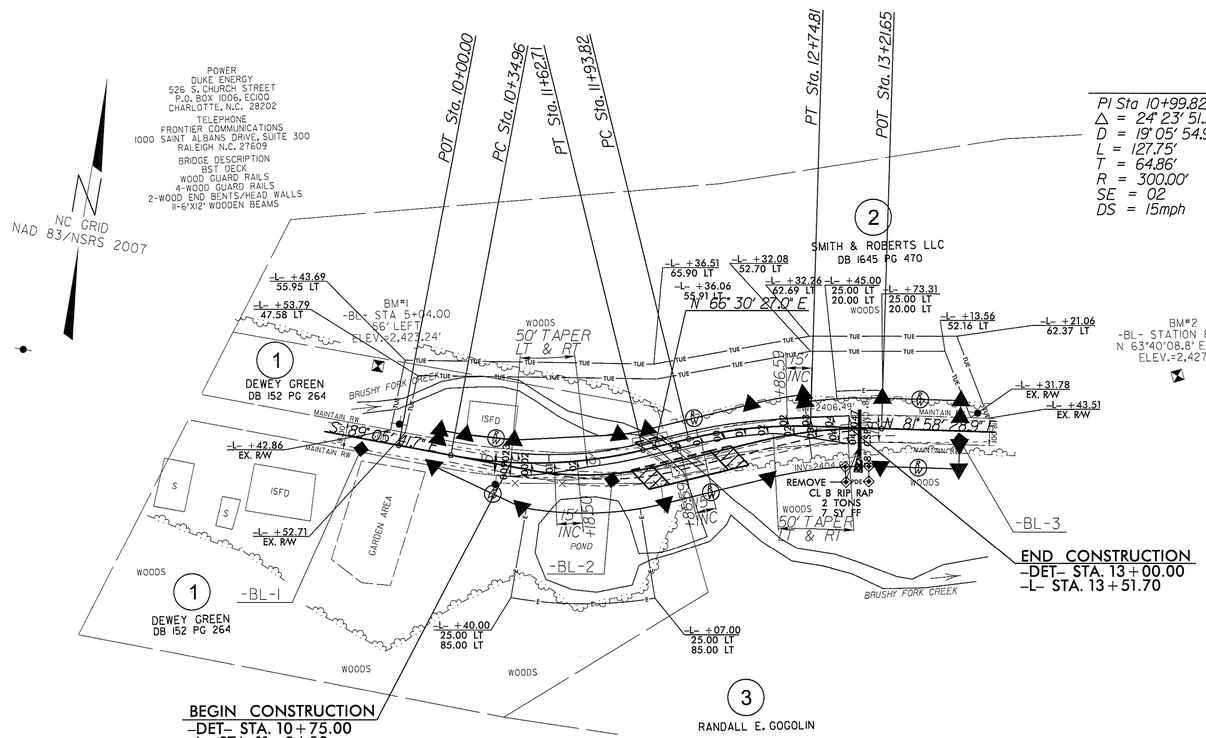

-DET-

PI Sta 10+99.82	PI Sta 12+34.56
Δ = 24° 23' 51.3" (LT)	Δ = 15° 28' 01.9" (RT)
D = 19° 05' 54.9'	D = 19° 05' 54.9'
L = 127.75'	L = 80.99'
T = 64.86'	T = 40.74'
R = 300.00'	R = 300.00'
SE = 02	SE = 02
DS = 15mph	DS = 15mph

BM#2
-BL- STATION 8+98.00
N 63°40'08.8" E 150.00'
ELEV.=2,427.20'

-DET- SR 1371 (BRUSHY CREEK ROAD)

BM #1: 8" SPIKE SET IN THE ROOT OF THE 15" POPLAR
-L- STA. 10+26.96 48.8453 LEFT
-BL- STA. 5+04.00 56.00' LEFT
EL 2327.42

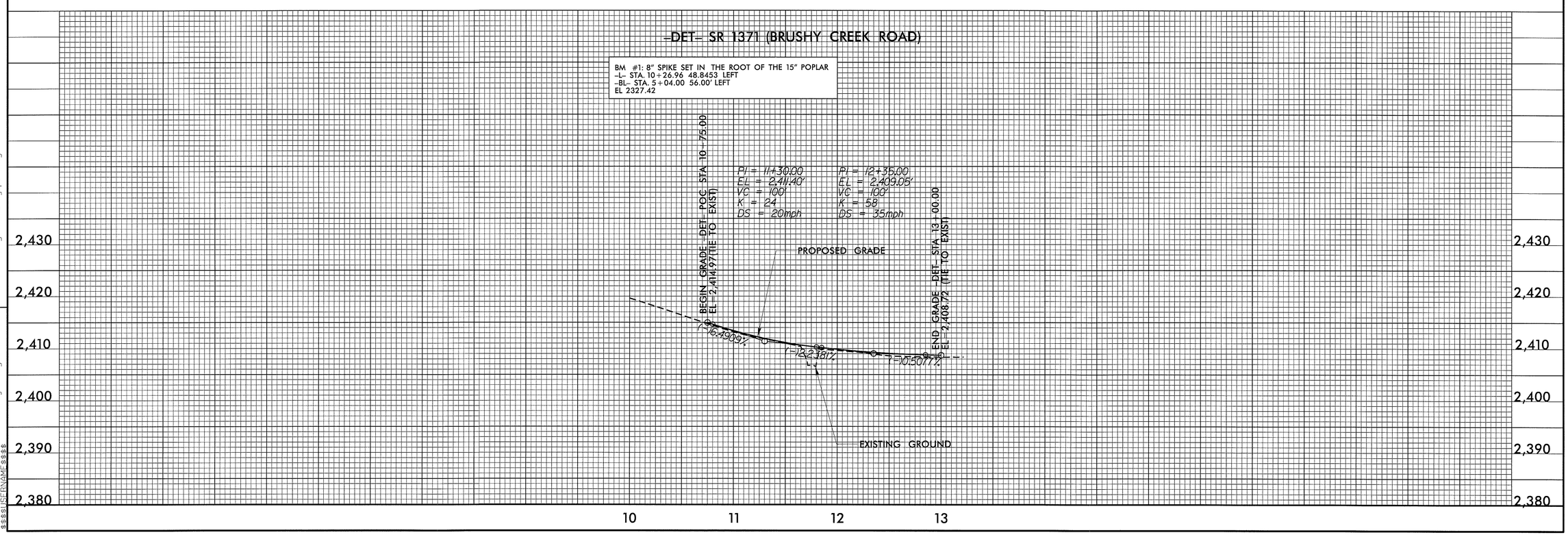

REVISIONS

8/17/99

15-FEB-2013 10:46
J:\11_AECOM\Jackson County Bridges\BR-300\Current Drawings\300_Rdy_psh5.dgn
$$$$USERNAME$$$$

STATE OF NORTH CAROLINA
DIVISION OF HIGHWAYS

TRANSPORTATION MANAGEMENT PLAN

JACKSON COUNTY

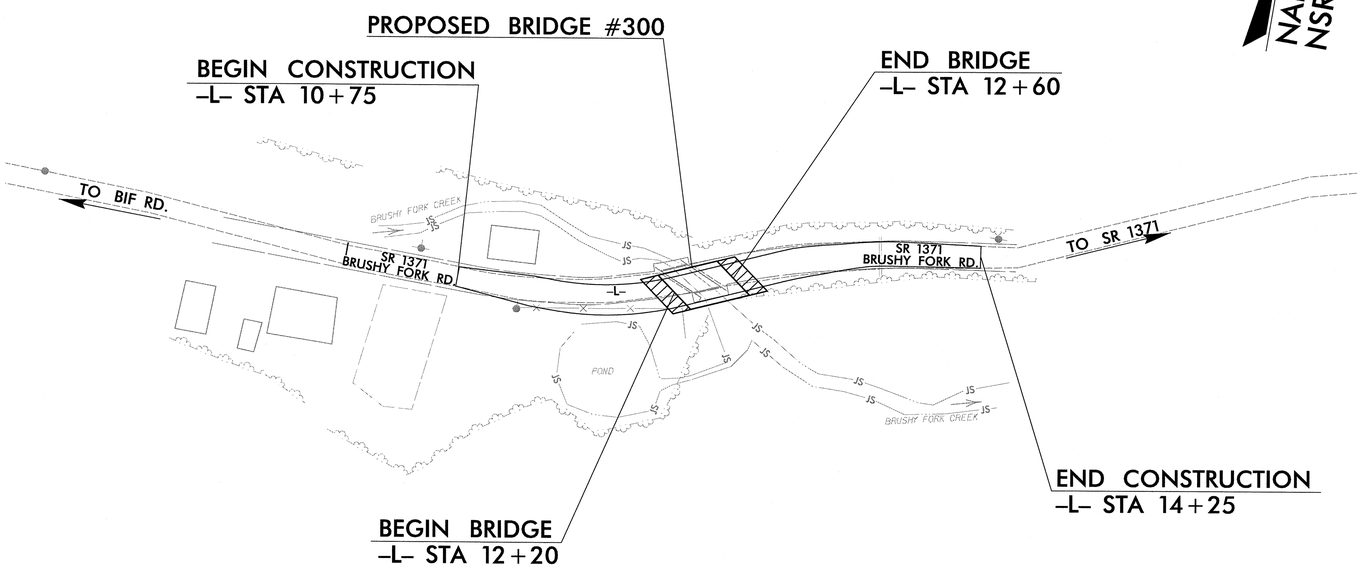

INDEX OF SHEETS

SHEET NO.	TITLE
TMP-1	TITLE SHEET, AND INDEX OF SHEETS
TMP-1A	GENERAL NOTES
TMP-2	TEMPORARY TRAFFIC CONTROL PHASE I DETAIL
TMP-3	TEMPORARY TRAFFIC CONTROL PHASE II DETAIL
TMP-4	TEMPORARY TRAFFIC CONTROL PHASE III DETAIL

NOTE: WRITTEN PHASING FOR THE TRAFFIC CONTROL PLAN APPEARS ON THE OVERVIEW SHEETS

ROADWAY STANDARD DRAWINGS

THE FOLLOWING ROADWAY STANDARDS AS APPEAR IN "ROADWAY STANDARD DRAWINGS" - PROJECT SERVICES UNIT - N.C. DEPARTMENT OF TRANSPORTATION - RALEIGH, N.C., DATED JANUARY 2012 ARE APPLICABLE TO THIS PROJECT AND BY REFERENCE HEREBY ARE CONSIDERED A PART OF THESE PLANS:

STD.NO.	TITLE
1101.01	WORK ZONE WARNING SIGNS
1101.02	TEMPORARY LANE CLOSURES
1101.04	TEMPORARY SHOULDER CLOSURES
1101.05	WORK ZONE VEHICLE ACCESSES
1101.11	TRAFFIC CONTROL DESIGN TABLES
1110.01	STATIONARY WORK ZONE SIGNS
1110.02	PORTABLE WORK ZONE SIGNS
1130.01	DRUMS
1160.01	TEMPORARY CRASH CUSHION
1170.01	PORTABLE CONCRETE BARRIER
1205.01	PAVEMENT MARKINGS - LINE TYPES AND OFFSETS
1205.02	PAVEMENT MARKINGS - TWO LANE AND MULTILANE ROADWAYS
1205.12	PAVEMENT MARKINGS - BRIDGES

SHEET NO.
TMP-1

17BP.14.R.15

TIP PROJECT:

WORK ZONE SAFETY & MOBILITY
"from the MOUNTAINS to the COAST"

N.C.D.O.T. WORK ZONE TRAFFIC CONTROL
1561 MAIL SERVICE CENTER (MSC) RALEIGH, NC 27699-1561
750 N. GREENFIELD PARKWAY, GARNER, NC 27529 (DELIVERY)
PHONE: (919) 773-2800 FAX: (919) 771-2745

J. S. BOURNE, P.E. — STATE TRAFFIC MANAGEMENT ENGINEER
K.J. VAN METRE, PE — TRAFFIC CONTROL PROJECT ENGINEER
T.E. HILDEBRAND, PE — TRAFFIC CONTROL PROJECT DESIGN ENGINEER
_____ — TRAFFIC CONTROL DESIGN ENGINEER

DIVISION OF HIGHWAYS
STATE OF NORTH CAROLINA
DEPARTMENT OF TRANSPORTATION
WORK ZONE TRAFFIC CONTROL

AECOM
NC Firm License No.: F-0342
701 Corporate Center Drive
Suite 475 Raleigh, NC 27607
Phone: 919-854-6200

APPROVED: [signature]
DATE: 6/4/13

SEAL

1:42:36 PM
Q:\60238772\400_Tech_Info_Disc_Files\450_NCDOTStdTechDesFiles\BRG_300_EE\Traffic\TrafficControl\TCP\49-0300_tcp_tsh.dgn
hildebrandt

PROJ. REFERENCE NO.	SHEET NO.
17BP.14.R.15	TMP-1A

GENERAL NOTES

CHANGES MAY BE REQUIRED WHEN PHYSICAL DIMENSIONS IN THE DETAIL DRAWINGS, STANDARD DETAILS, AND ROADWAY DETAILS ARE NOT ATTAINABLE TO MEET FIELD CONDITIONS OR RESULT IN DUPLICATE OR UNDESIRED OVERLAPPING OF DEVICES. MODIFICATION MAY INCLUDE: MOVING, SUPPLEMENTING, COVERING, OR REMOVAL OF DEVICES AS DIRECTED BY THE ENGINEER.

THE FOLLOWING GENERAL NOTES APPLY AT ALL TIMES FOR THE DURATION OF THE CONSTRUCTION PROJECT EXCEPT WHEN OTHERWISE NOTED IN THE PLAN OR DIRECTED BY THE ENGINEER.

TIME RESTRICTIONS

A) DO NOT CLOSE OR NARROW TRAVEL LANES AS FOLLOWS:

ROAD NAME	DAY AND TIME RESTRICTIONS
BRUSHY FORK RD	7:00AM - 9:00AM AND 4:00PM - 6:00PM, MONDAY THRU FRIDAY.

B) DO NOT CLOSE OR NARROW TRAVEL LANES DURING HOLIDAYS AND SPECIAL EVENTS AS FOLLOWS:

BRUSHY FORK RD

TO BE DETERMINED BY DIVISION PERSONNEL.

LANE AND SHOULDER CLOSURE REQUIREMENTS

C) REMOVE LANE CLOSURE DEVICES FROM THE LANE WHEN WORK IS NOT BEING PERFORMED BEHIND THE LANE CLOSURE OR WHEN A LANE CLOSURE IS NO LONGER NEEDED OR AS DIRECTED BY THE ENGINEER.

D) WHEN PERSONNEL AND/OR EQUIPMENT ARE WORKING ON THE SHOULDER ADJACENT TO AN UNDIVIDED FACILITY AND WITHIN 5 FT OF AN OPEN TRAVEL LANE, CLOSE THE NEAREST OPEN TRAVEL LANE USING ROADWAY STANDARD DRAWING NO. 1101.02 UNLESS THE WORK AREA IS PROTECTED BY BARRIER OR GUARDRAIL.

WHEN PERSONNEL AND/OR EQUIPMENT ARE WORKING ON THE SHOULDER ADJACENT TO A DIVIDED FACILITY AND WITHIN 10 FT OF AN OPEN TRAVEL LANE, CLOSE THE NEAREST OPEN TRAVEL LANE USING ROADWAY STANDARD DRAWING NO. 1101.02 UNLESS THE WORK AREA IS PROTECTED BY BARRIER OR GUARDRAIL.

E) WHEN PERSONNEL AND/OR EQUIPMENT ARE WORKING WITHIN A LANE OF TRAVEL OF AN UNDIVIDED OR DIVIDED FACILITY, CLOSE THE LANE ACCORDING TO THE TRAFFIC CONTROL PLANS, ROADWAY STANDARD DRAWINGS, OR AS DIRECTED BY THE ENGINEER. CONDUCT THE WORK SO THAT ALL PERSONNEL AND/OR EQUIPMENT REMAIN WITHIN THE CLOSED TRAVEL LANE.

F) DO NOT WORK SIMULTANEOUSLY WITHIN 15 FT ON BOTH SIDES OF AN OPEN TRAVELWAY, RAMP, OR LOOP WITHIN THE SAME LOCATION UNLESS PROTECTED WITH GUARDRAIL OR BARRIER.

G) PROVIDE TRAFFIC CONTROL FOR APPROPRIATE LANE CLOSURES FOR SURVEYING DONE BY THE DEPARTMENT.

PAVEMENT EDGE DROP OFF REQUIREMENTS

H) BACKFILL AT A 6:1 SLOPE UP TO THE EDGE AND ELEVATION OF EXISTING PAVEMENT IN AREAS ADJACENT TO AN OPENED TRAVEL LANE THAT HAS AN EDGE OF PAVEMENT DROP-OFF AS FOLLOWS:

BACKFILL DROP-OFFS THAT EXCEED 2 INCHES ON ROADWAYS WITH POSTED SPEED LIMITS OF 45 MPH OR GREATER.

BACKFILL DROP-OFFS THAT EXCEED 3 INCHES ON ROADWAYS WITH POSTED SPEED LIMITS LESS THAN 45 MPH.

BACKFILL WITH SUITABLE COMPACTED MATERIAL, AS APPROVED BY THE ENGINEER, AT NO EXPENSE TO THE DEPARTMENT.

I) DO NOT EXCEED A DIFFERENCE OF 2 INCHES IN ELEVATION BETWEEN OPEN LANES OF TRAFFIC FOR NOMINAL LIFTS OF 1.5 INCHES. INSTALL ADVANCE WARNING "UNEVEN LANES" SIGNS (W8-11) 100 FT IN ADVANCE AND A MINIMUM OF EVERY HALF MILE THROUGHOUT THE UNEVEN AREA.

TRAFFIC PATTERN ALTERATIONS

J) NOTIFY THE ENGINEER TWENTY ONE (21) CALENDAR DAYS PRIOR TO ANY TRAFFIC PATTERN ALTERATION.

SIGNING

K) INSTALL ADVANCE WORK ZONE WARNING SIGNS WHEN WORK IS WITHIN 40 FT FROM THE EDGE OF TRAVEL LANE AND NO MORE THAN THREE (3) DAYS PRIOR TO THE BEGINNING OF CONSTRUCTION.

L) PROVIDE SIGNING AND DEVICES REQUIRED TO CLOSE THE ROAD ACCORDING TO THE ROADWAY STANDARD DRAWINGS AND TRAFFIC CONTROL PLANS.

M) COVER OR REMOVE ALL SIGNS AND DEVICES REQUIRED TO CLOSE THE ROAD WHEN ROAD CLOSURE IS NOT IN OPERATION.

COVER OR REMOVE ALL SIGNS REQUIRED FOR THE OFF-SITE DETOUR WHEN THE DETOUR IS NOT IN OPERATION.

N) ENSURE ALL NECESSARY SIGNING IS IN PLACE PRIOR TO ALTERING ANY TRAFFIC PATTERN.

O) INSTALL BLACK ON ORANGE "DIP" SIGNS (W8-2) AND/OR "BUMP" SIGNS (W8-1) IN ADVANCE OF THE UNEVEN AREA, OR AS DIRECTED BY THE ENGINEER.

TRAFFIC BARRIER

P) INSTALL TEMPORARY BARRIER ACCORDING TO THE TRANSPORTATION MANAGEMENT PLANS A MAXIMUM OF TWO (2) WEEKS PRIOR TO BEGINNING WORK IN ANY LOCATION. ONCE TEMPORARY BARRIER IS INSTALLED AT ANY LOCATION PROCEED IN A CONTINUOUS MANNER TO COMPLETE THE PROPOSED WORK IN THAT LOCATION UNLESS OTHERWISE STATED IN THE TRANSPORTATION MANAGEMENT PLANS OR AS DIRECTED BY THE ENGINEER.

DO NOT PLACE BARRIER DIRECTLY ON ANY SURFACE OTHER THAN ASPHALT OR CONCRETE.

ONCE TEMPORARY BARRIER IS INSTALLED AT ANY LOCATION AND NO WORK IS PERFORMED BEHIND THE TEMPORARY BARRIER FOR A PERIOD LONGER THAN TWO (2) MONTHS, REMOVE / RESET TEMPORARY BARRIER AT NO COST TO THE DEPARTMENT UNLESS OTHERWISE STATED IN THE TRANSPORTATION MANAGEMENT PLANS, TEMPORARY BARRIER IS PROTECTING A HAZARD, OR AS DIRECTED BY THE ENGINEER.

INSTALL TEMPORARY BARRIER WITH THE TRAFFIC FLOW BEGINNING WITH THE UPSTREAM SIDE OF TRAFFIC. REMOVE TEMPORARY BARRIER AGAINST THE TRAFFIC FLOW BEGINNING WITH THE DOWNSTREAM SIDE OF TRAFFIC.

INSTALL AND SPACE DRUMS NO GREATER THAN TWICE THE POSTED SPEED LIMIT (MPH) TO CLOSE OR KEEP THE SECTION OF THE ROADWAY CLOSED UNTIL THE TEMPORARY BARRIER CAN BE PLACED OR AFTER THE TEMPORARY BARRIER IS REMOVED.

Q) PROTECT THE APPROACH END OF MOVABLE/PORTABLE CONCRETE BARRIER AT ALL TIMES DURING THE INSTALLATION AND REMOVAL OF THE BARRIER BY EITHER A TRUCK MOUNTED ATTENUATOR (MAXIMUM 72 HOURS) OR A TEMPORARY CRASH CUSHION.

PROTECT THE APPROACH END OF MOVABLE/PORTABLE CONCRETE BARRIER FROM ONCOMING TRAFFIC AT ALL TIMES BY A TEMPORARY CRASH CUSHION UNLESS THE APPROACH END OF MOVABLE/PORTABLE CONCRETE BARRIER IS OFFSET FROM ONCOMING TRAFFIC AS FOLLOWS OR AS SHOWN IN THE PLANS: (SEE ALSO 1101.05)

POSTED SPEED LIMIT	MINIMUM OFFSET
40 OR LESS	15 FT
45 - 50	20 FT
55	25 FT
60 MPH or HIGHER	30 FT

TRAFFIC CONTROL DEVICES

R) WHEN LANE CLOSURES ARE NOT IN EFFECT SPACE CHANNELIZING DEVICES IN WORK AREAS NO GREATER IN FEET THAN TWICE THE POSTED SPEED LIMIT (MPH) EXCEPT, 10 FT ON-CENTER IN RADII, AND 3 FT OFF THE EDGE OF AN OPEN TRAVELWAY. REFER TO STANDARD SPECIFICATIONS FOR ROADS AND STRUCTURES SECTIONS 1130 (DRUMS), 1135 (CONES) AND 1180 (SKINNY DRUMS) FOR ADDITIONAL REQUIREMENTS.

S) PLACE TYPE III BARRICADES, WITH "ROAD CLOSED" SIGN R11-2 ATTACHED, OF SUFFICIENT LENGTH TO CLOSE ENTIRE ROADWAY.

T) PLACE ADDITIONAL SETS OF THREE CHANNELIZING DEVICES PERPENDICULAR TO THE EDGE OF TRAVELWAY ON 500 FT CENTERS WHEN UNOPENED LANES ARE CLOSED TO TRAFFIC.

U) TIE PROPOSED PAVEMENT MARKING LINES TO EXISTING PAVEMENT MARKING LINES.

MISCELLANEOUS

V) IN THE EVENT A TIE-IN CANNOT BE MADE IN ONE DAY'S TIME, BRING THE TIE-IN AREA TO AN APPROPRIATE ROADWAY ELEVATION AS DETERMINED BY THE ENGINEER. PLACE BLACK ON ORANGE "LOOSE GRAVEL" SIGNS (W8-7) AND BLACK ON ORANGE "PAVEMENT ENDS" SIGNS (W8-3) 50 FT AND 100 FT RESPECTIVELY IN ADVANCE OF THE UNEVEN AREAS. USE DRUMS TO DELINEATE THE EDGE OF ROADWAY ALONG UNPAVED AREAS.

AECOM
NC Firm License No.: F-0342
701 Corporate Center Drive
Suite 475 Raleigh, NC 27607
Phone: 919-854-6200

APPROVED:_____ DATE:_____

NORTH CAROLINA PROFESSIONAL SEAL 038501 ENGINEER THOMAS E. HILDEBRAND

DIVISION OF HIGHWAYS STATE OF NORTH CAROLINA DEPARTMENT OF TRANSPORTATION WORK ZONE TRAFFIC CONTROL

GENERAL NOTES

SCALE:	
DATE:	2/21/2013
DWG. BY:	TEH
DESIGN BY:	KJV
REVIEWED BY:	

REVISIONS

CADD FILE

1:42:27 PM
02/21/2013
hildebrandt
\\172\400_Tech_Info_Disc_Files\450_NCDOT\StdTechDesFiles\BRG_300_EE\Traffic\TrafficControl\TCP\49-0300_tcp_pshA_Notes_General.dgn

PROJ. REFERENCE NO.	SHEET NO.
17BP.14.R.15	TMP-2

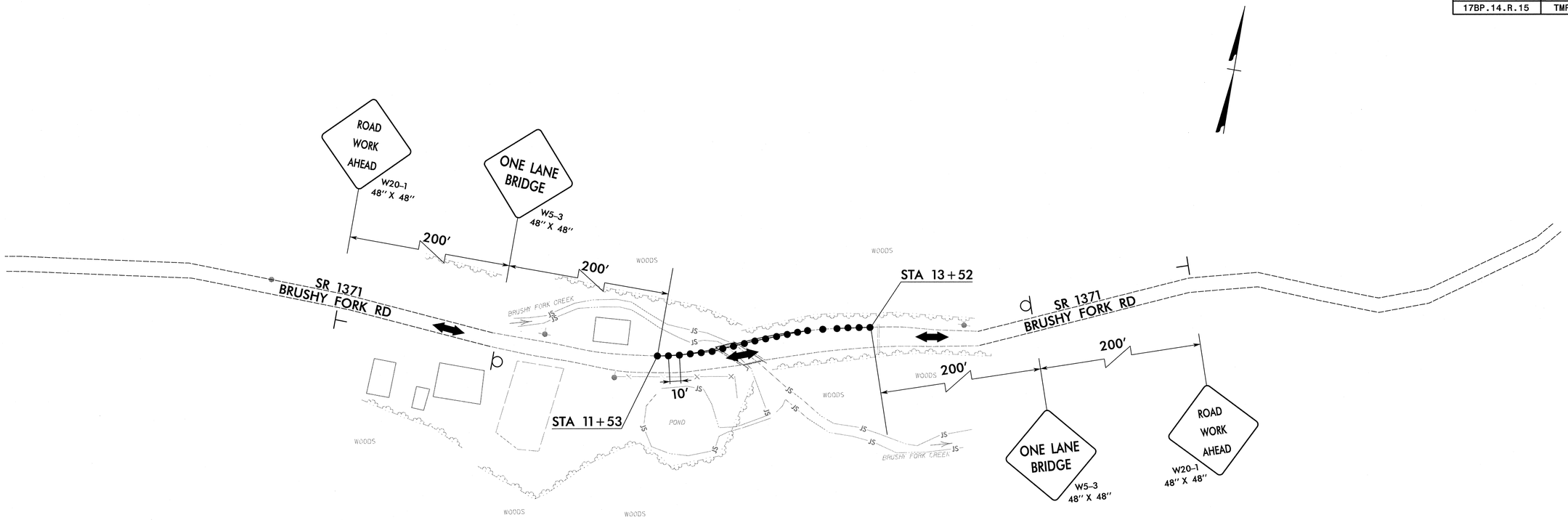

TYPICAL SECTION VIEW

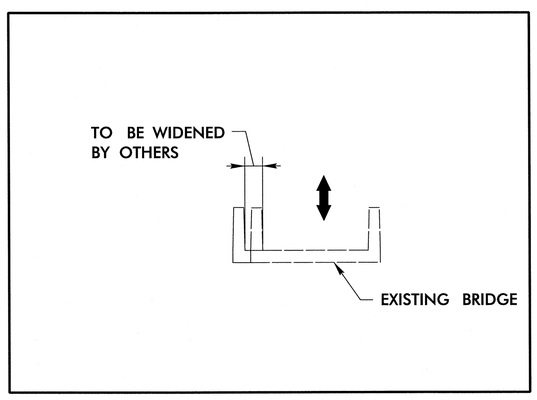

PHASING NOTES

STAGE 1: MAINTAIN TRAFFIC ON EXISTING ROADWAY.

STAGE 2: PLACE ADVANCED WARNING SIGNS, TRAFFIC CONTROL DEVICES AND CONSTRUCT TEMP. WIDENING.

LEGEND

EXISTING ROADWAY

PROPOSED CONSTRUCTION

COMPLETED ROADWAY

GRAPHIC SCALE
50 25 0 50 100
PLANS

AECOM
NC Firm License No.: F-0342
701 Corporate Center Drive
Suite 475 Raleigh, NC 27607
Phone: 919-854-6200

APPROVED: _____ DATE: _____

NORTH CAROLINA PROFESSIONAL SEAL 038501 ENGINEER THOMAS E. HILDEBRAND

DIVISION OF HIGHWAYS STATE OF NORTH CAROLINA DEPARTMENT OF TRANSPORTATION WORK ZONE TRAFFIC CONTROL

PHASE I DETAIL

SCALE:	
DATE:	2/21/2013
DWG. BY:	TEH
DESIGN BY:	KJV
REVIEWED BY:	

REVISIONS

CADD FILE

4:24:41 PM
02/25/2013
D:\pwworkdir\
\\ncdot.org\dfs\772\400_Tech_Info_Disc_Files\450_NCDOT\StdTechDesFiles\BRG_300_EE\Traffic\TrafficControl\TCP\49-300_tcp_psh_phase1.dgn

PROJ. REFERENCE NO.	SHEET NO.
17BP.14.R.15	TMP-3

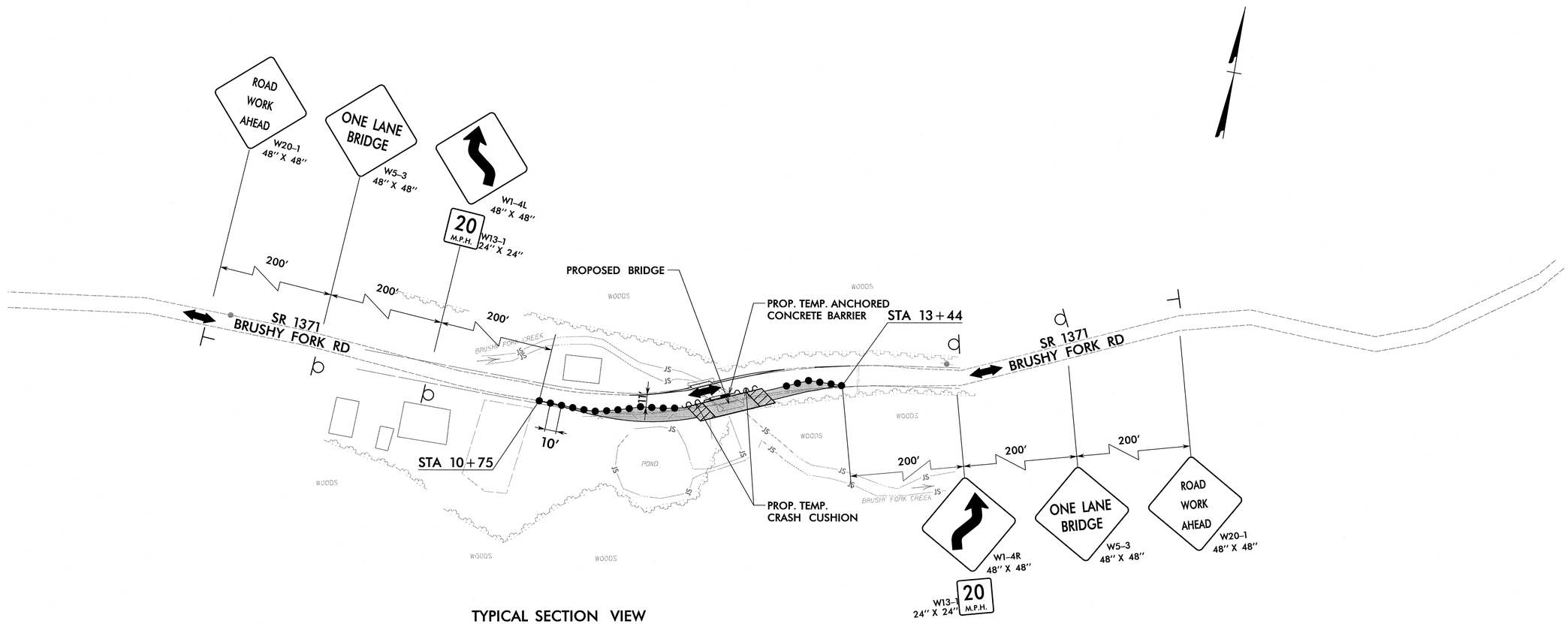

TYPICAL SECTION VIEW

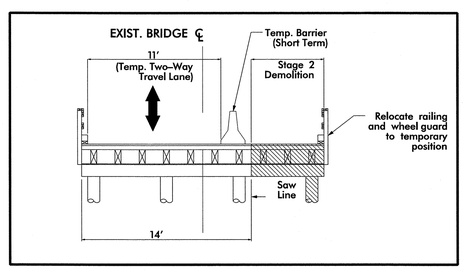

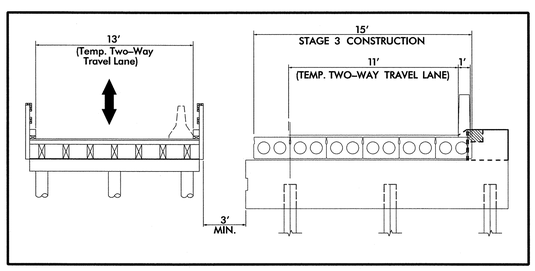

PHASING NOTES

STAGE 1: RELOCATE ADVANCED WARNING SIGNS, TRAFFIC CONTROL DEVICES, AND INSTALL SHIFT SIGNS.

STAGE 2: PLACE TEMP. BARRIER, RELOCATE RAILING AND REMOVE PART OF EXISTING BRIDGE.

STAGE 3: CONSTRUCT PART OF PROPOSED BRIDGE AND ROADWAY.

LEGEND

- EXISTING ROADWAY
- PROPOSED CONSTRUCTION
- COMPLETED ROADWAY

GRAPHIC SCALE
50 25 0 50 100
PLANS

AECOM
NC Firm License No.: F-0342
701 Corporate Center Drive
Suite 475 Raleigh, NC 27607
Phone: 919-854-6200

APPROVED: _____ DATE: _____

NORTH CAROLINA PROFESSIONAL ENGINEER SEAL 038501 DONALD E. HILDEBRAND

DIVISION OF HIGHWAYS · STATE OF NORTH CAROLINA · DEPARTMENT OF TRANSPORTATION · WORK ZONE TRAFFIC CONTROL

PHASE II DETAIL

SCALE:	
DATE:	2/21/2013
DWG. BY:	TEH
DESIGN BY:	KJV
REVIEWED BY:	

REVISIONS

CADD FILE

8/02/04 PM
8/02/2013 8:47
hildebrandt
J:\400_Tech_Info_Disc_Files\450_NCDOTStdTechDesFiles\BRG_300_EE\TrafficTraffic\TrafficControl\TCP\49-300_tcp_psh_phase2.dgn

PROJ. REFERENCE NO.	SHEET NO.
17BP.14.R.15	TMP-4

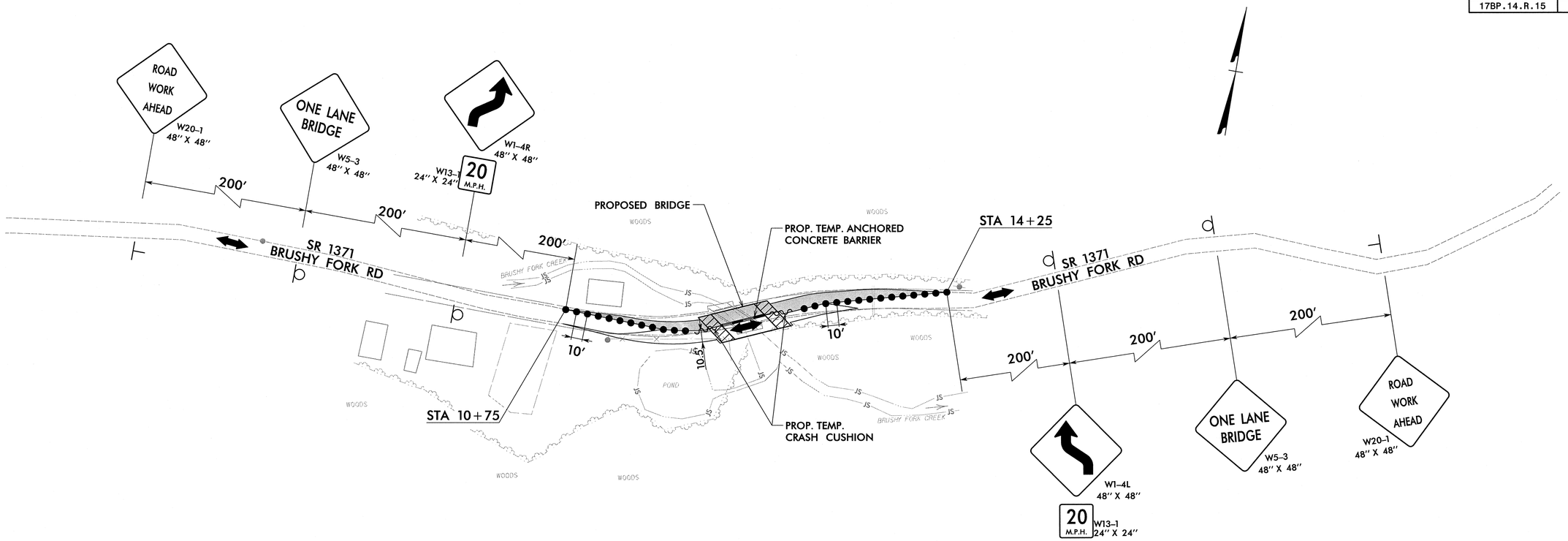

TYPICAL SECTION VIEW

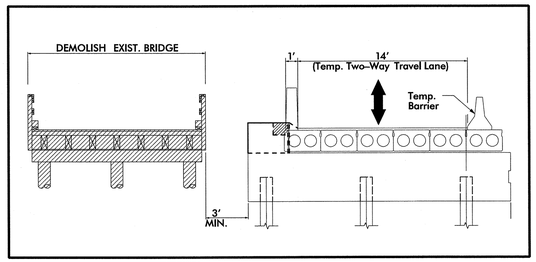

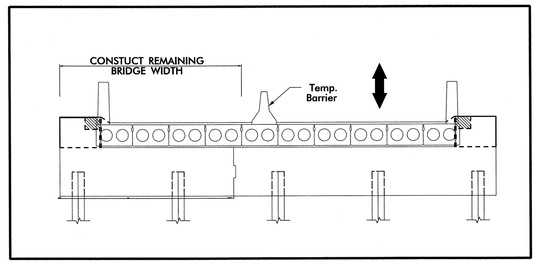

PHASING NOTES

STAGE 1: SHIFT TRAFFIC TO PART OF PROPOSED ROADWAY AND BRIDGE CONSTRUCTED DURING PHASE II.

STAGE 2: REMOVE REMAINING EXISTING BRIDGE.

STAGE 3: CONSTRUCT REMAINING BRIDGE WIDTH AND ROADWAY.

STAGE 4: REMOVE ADVANCED WARNING SIGNS AND TRAFFIC CONTROL DEVICES.

STAGE 5: OPEN PROJECT TO FINAL TRAFFIC PATTERN.

LEGEND

EXISTING ROADWAY

PROPOSED CONSTRUCTION

COMPLETED ROADWAY

GRAPHIC SCALE
50 25 0 50 100
PLANS

AECOM
NC Firm License No.: F-0342
701 Corporate Center Drive
Suite 475 Raleigh, NC 27607
Phone: 919-854-6200

APPROVED: DATE:

SEAL 038501 ENGINEER JOHNG. HUSSRAD

DIVISION OF HIGHWAYS · STATE OF NORTH CAROLINA · DEPARTMENT OF TRANSPORTATION · WORK ZONE TRAFFIC CONTROL

PHASE III DETAIL

SCALE:	
DATE:	2/21/2013
DWG. BY:	TEH
DESIGN BY:	KJV
REVIEWED BY:	

REVISIONS

CADD FILE

k42+47 PM
9:18:02 3/7/2 \400_Tech_Info_Disc_Files\450_NCDOTStdTechDesFiles\BRG_300_EE\TrafficTrafficControl\TCP\49-300_tcp_psh_phase3.dgn

TIP PROJECT: 17BP.14.R.15

STATE	STATE PROJECT REFERENCE NO.	SHEET NO.	TOTAL SHEETS
N.C.	17BP.14.R.15	EC-1	

STATE PROJ. NO.	F.A. PROJ. NO.	DESCRIPTION

STATE OF NORTH CAROLINA
DIVISION OF HIGHWAYS

PLAN FOR PROPOSED
HIGHWAY EROSION CONTROL

Environmentally Sensitive Areas:

This project is located in an "Environmentally Sensitive Area." This designation requires special procedures to be used for clearing and grubbing, temporary stream crossings, and grading operations within the area identified on the plans. This also requires special procedures to be used for seeding and mulching and staged seeding within the project.

Clearing and Grubbing:

In areas identified on the erosion control plans as "Environmentally Sensitive Areas", the Contractor may perform clearing operations, but not grubbing operations until immediately prior to beginning grading operations as described in Section 200, Article 200–1, in the Standard Specifications. The "Environmentally Sensitive Area" shall be defined as a 50 foot buffer zone on both sides of the stream (or depression), measured from top of streambank, (or center of depression). Only clearing operations (not grubbing) shall be allowed in this buffer zone until immediately prior to beginning grading operations. Erosion control devices shall be installed immediately following the clearing operation.

Grading:

Once grading operations begin in identified "Environmentally Sensitive Areas", work will progress in a continuous manner until complete. All construction within these areas must progress in a continuous manner such that each phase is complete and areas permanently stabilized prior to beginning of next phase. Failure on the part of the Contractor to complete any phase of construction in a continuous manner in "Environmentally Sensitive Areas" as specified will be just cause for the Engineer to direct the suspension of work in accordance with Section 108–7 of the Standard Specifications.

Temporary Stream Crossings:

Any crossing of streams within the limits of this project must be accomplished in accordance with Section 107–13(b) of the Standard Specifications.

Seeding and Mulching:

Seeding and mulching shall be performed in accordance with Section 1660 of the Standard Specifications and vegetative cover sufficient to restrain erosion shall be installed immediately following grade establishment.

Seeding and mulching shall be performed on the areas disturbed by construction immediately following final grade establishment. No appreciable time shall lapse into the contract time without stabilization of slopes, ditches and other areas within the "Environmentally Sensitive Areas" as indicated on the erosion control plans.

Stage Seeding:

The work covered by this section shall consist of the establishment of a vegetative cover on cut and fill slopes as grading progresses. Seeding and mulching shall be done in stages on cut and fill slopes which are greater than 20 feet in height measured along the slope, or greater than 2 acres in area. Each stage shall not exceed the limits stated above.

All work described above will be paid for at the contract price for "Lump Sum for Erosion Control" established in the contract for the work involved. Additional payments will not be made for the requirements of this section as the cost for this work should be included in the contract price for "Lump Sum for Erosion Control" for the work involved.

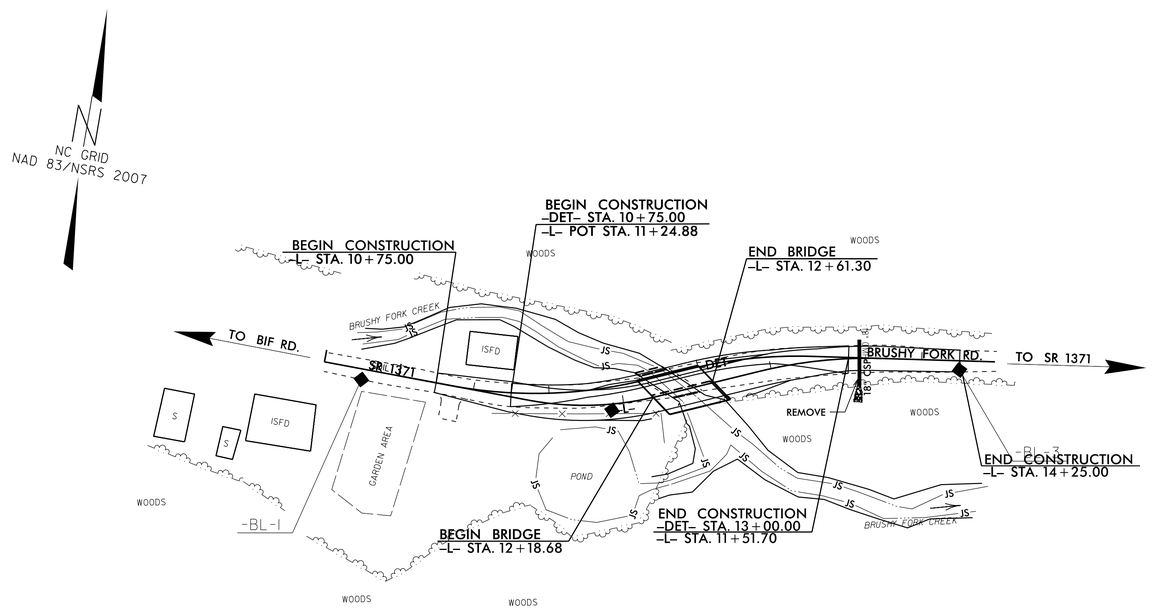

EROSION AND SEDIMENT CONTROL MEASURES

Std. #	Description	Symbol
1630.03	Temporary Silt Ditch	TSD
1630.05	Temporary Diversion	TD
1605.01	Temporary Silt Fence	
1606.01	Special Sediment Control Fence	
1622.01	Temporary Berms and Slope Drains	
1630.02	Silt Basin Type B	
1633.01	Temporary Rock Silt Check Type-A	
	Temporary Rock Silt Check Type-A with Matting and Polyacrylamide (PAM)	
1633.02	Temporary Rock Silt Check Type-B	
	Wattle/ Coir Fiber Wattle	EW CFW
	Wattle/ Coir Fiber Wattle with Polyacrylamide (PAM)	
1634.01	Temporary Rock Sediment Dam Type-A	
1634.02	Temporary Rock Sediment Dam Type-B	
1635.01	Rock Pipe Inlet Sediment Trap Type-A	
1635.02	Rock Pipe Inlet Sediment Trap Type-B	
1630.04	Stilling Basin	
1630.06	Special Stilling Basin	
	Rock Inlet Sediment Trap:	
1632.01	Type A	A
1632.02	Type B	B
1632.03	Type C	C
	Skimmer Basin	
	Tiered Skimmer Basin	
	Infiltration Basin	

THIS PROJECT CONTAINS EROSION CONTROL PLANS FOR CLEARING AND GRUBBING PHASE OF CONSTRUCTION.

NOTES: ANY DEVIATION FROM OPTIONS GIVEN WILL REQUIRE PRIOR APPROVAL BY ENGINEER.

ADDITIONAL EROSION CONTROL DEVICES MAY NEED TO BE INSTALLED AS DIRECTED BY THE ENGINEER.

Jenny Fleming, PE
LEVEL IIIA NAME

534
LEVEL IIIA CERTIFICATION NO.

GRAPHIC SCALE

0
PLANS

0
PROFILE (HORIZONTAL)

0
PROFILE (VERTICAL)

ROADSIDE ENVIRONMENTAL UNIT
DIVISION OF HIGHWAYS
STATE OF NORTH CAROLINA

THESE EROSION AND SEDIMENT CONTROL PLANS COMPLY WITH THE REGULATIONS SET FORTH BY THE NCG–010000 GENERAL CONSTRUCTION PERMIT EFFECTIVE AUGUST 3, 2011 ISSUED BY THE NORTH CAROLINA DEPARTMENT OF ENVIRONMENT AND NATURAL RESOURCES DIVISION OF WATER QUALITY.

Prepared in the Office of:

ROADSIDE ENVIRONMENTAL UNIT
1 South Wilmington St.
Raleigh, NC 27611

2012 STANDARD SPECIFICATIONS

Roadway Standard Drawings

The following roadway english standards as appear in "Roadway Standard Drawings"– Roadway Design Unit – N. C. Department of Transportation – Raleigh, N. C., dated January 2012 and the latest revison thereto are applicable to this project and by reference hereby are considered a part of these plans.

1604.01	Railroad Erosion Control Detail	1632.01	Rock Inlet Sediment Trap Type A
1605.01	Temporary Silt Fence	1632.02	Rock Inlet Sediment Trap Type B
1606.01	Special Sediment Control Fence	1632.03	Rock Inlet Sediment Trap Type C
1607.01	Gravel Construction Entrance	1633.01	Temporary Rock Silt Check Type A
1622.01	Temporary Berms and Slope Drains	1633.02	Temporary Rock Silt Check Type B
1630.01	Riser Basin	1634.01	Temporary Rock Sediment Dam Type A
1630.02	Silt Basin Type B	1634.02	Temporary Rock Sediment Dam Type B
1630.03	Temporary Silt Ditch	1635.01	Rock Pipe Inlet Sediment Trap Type A
1630.04	Stilling Basin	1635.02	Rock Pipe Inlet Sediment Trap Type B
1630.05	Temporary Diversion	1640.01	Coir Fiber Baffle
1630.06	Special Stilling Basin	1645.01	Temporary Stream Crossing
1631.01	Matting Installation		

05-JUN-2013 08:28
jects\lissa\DESIGN\Design County Bridges\BR-300\Current Drawings\300_EC_Ph_1.dgn
lissa

PROJECT REFERENCE NO.	SHEET NO.
17BP.14.R.15	EC-2
R/W SHEET NO.	

Prepared in the Office of: Ecological Engineering, PLLC
NC FIRM LICENSE No: F-1148
1151 SE Cary Parkway
Cary, NC 27518
(919) 557-0929

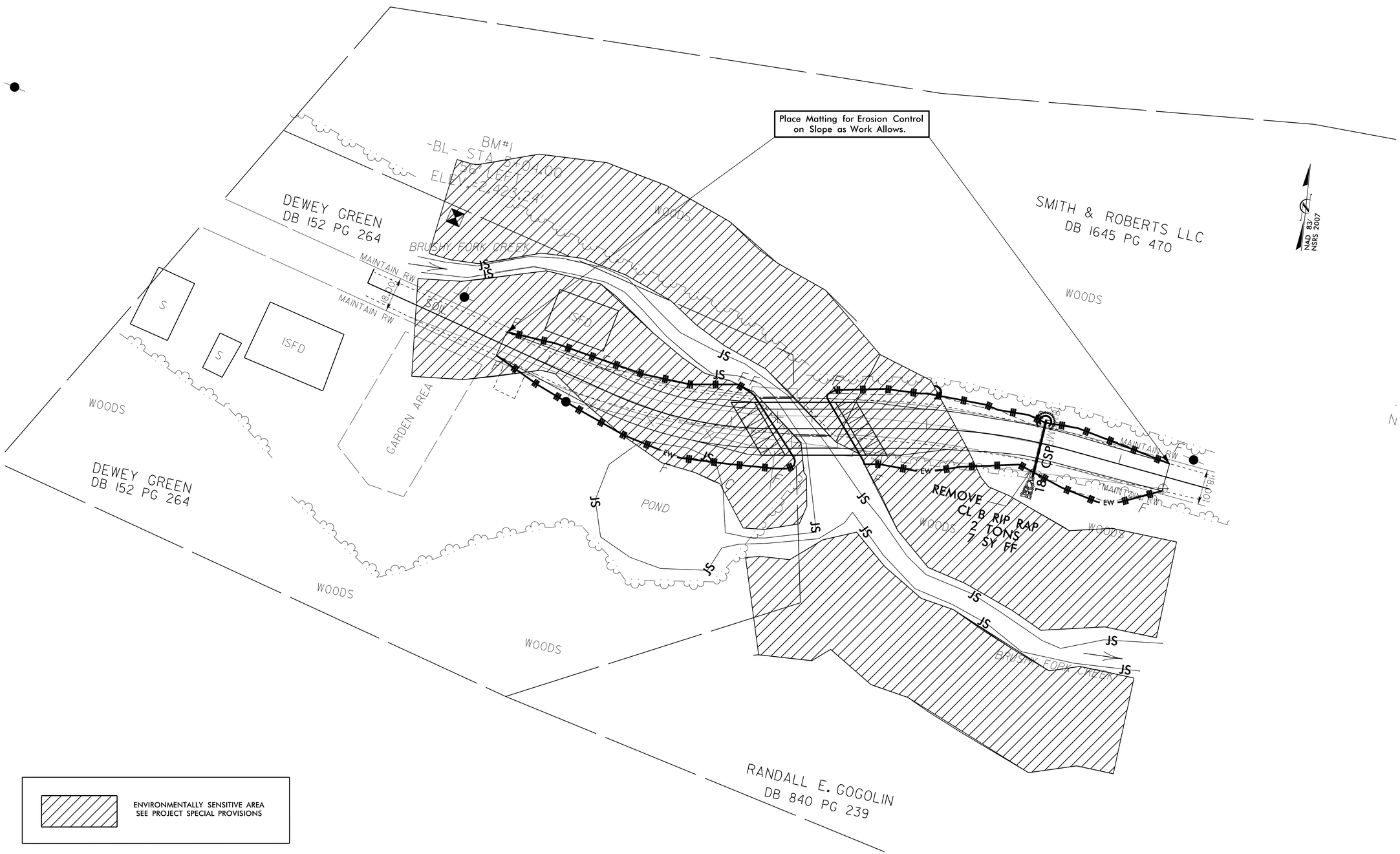

PROJECT REFERENCE NO.	SHEET NO.
17BP.14.R.15	EC-3
R/W SHEET NO.	

Prepared in the Office of: Ecological Engineering, PLLC
NC FIRM LICENSE No: F-1148
1151 SE Cary Parkway
Cary, NC 27518
(919) 557-0929

WATTLE BARRIER DETAIL

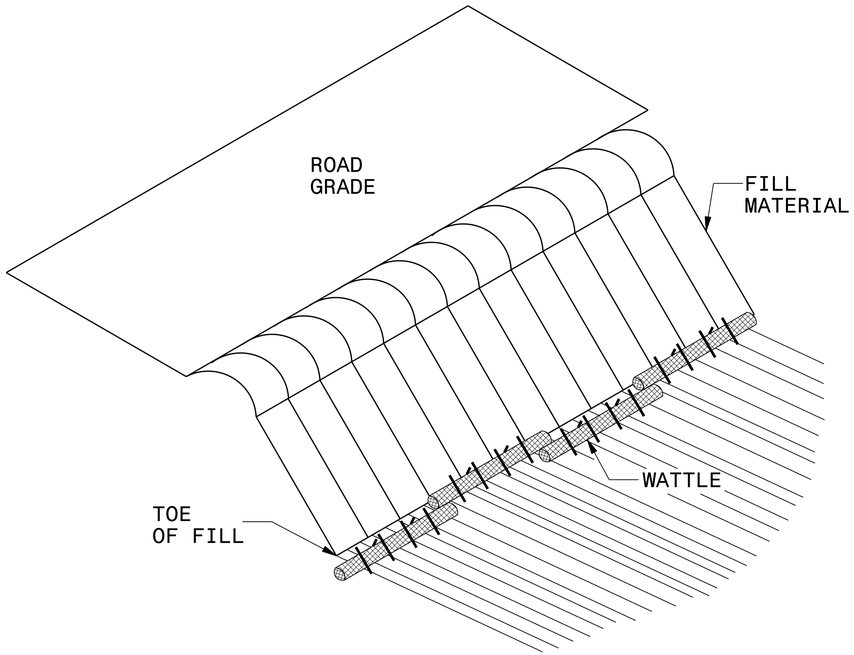

ISOMETRIC VIEW

NOTES:

USE MINIMUM 12 IN. DIAMETER EXCELSIOR WATTLE AND LENGTH OF 10 FT.

EXCAVATE A 1 TO 2 INCH TRENCH FOR WATTLE TO BE PLACED.

DO NOT PLACE WATTLES ON TOE OF SLOPE.

USE 2 FT. WOODEN STAKES WITH A 2 IN. BY 2 IN. NOMINAL CROSS SECTION.

INSTALL A MINIMUM OF 2 UPSLOPE STAKES AND 4 DOWNSLOPE STAKES AT AN ANGLE TO WEDGE WATTLE TO GROUND.

PROVIDE STAPLES MADE OF 0.125 IN. DIAMETER STEEL WIRE FORMED INTO A U SHAPE NOT LESS THAN 12″ IN LENGTH.

INSTALL STAPLES APPROXIMATELY EVERY 1 LINEAR FOOT ON BOTH SIDES OF WATTLE AND AT EACH END TO SECURE IT TO THE SOIL.

FOR BREAKS ALONG LARGE SLOPES, USE MAXIMUM SPACING OF 20 FT.

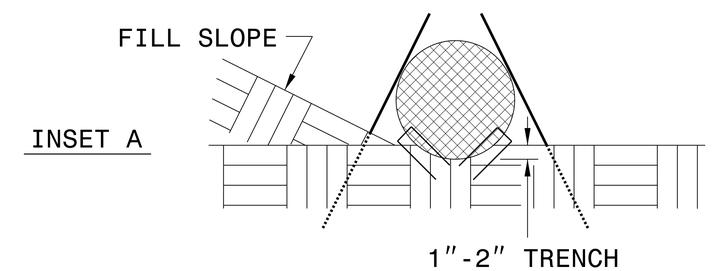

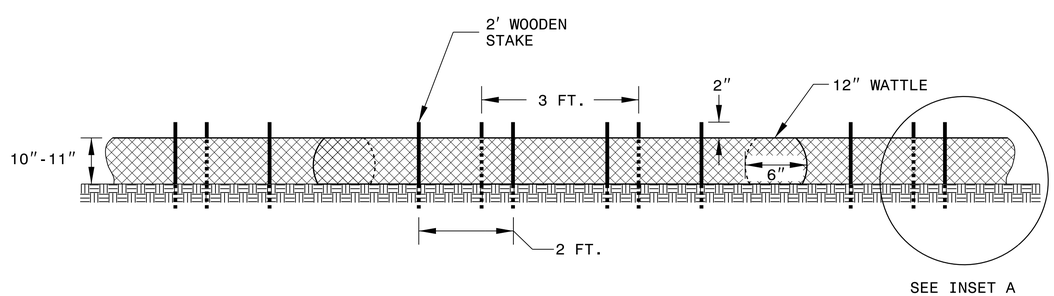

FRONT VIEW

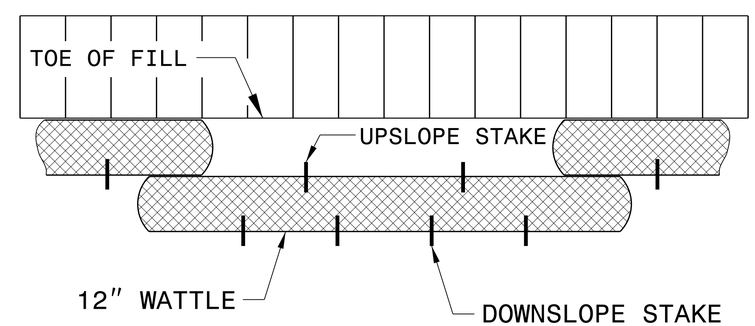

TOP VIEW

PROJECT REFERENCE NO.	SHEET NO.
17BP.14.R.15	EC-4
R/W SHEET NO.	

Prepared in the Office of: Ecological Engineering PLLC
NC FIRM LICENSE No: F-1148
1151 SE Cary Parkway
Cary, NC 27518
(919) 557-0929

SILT FENCE WATTLE BREAK DETAIL

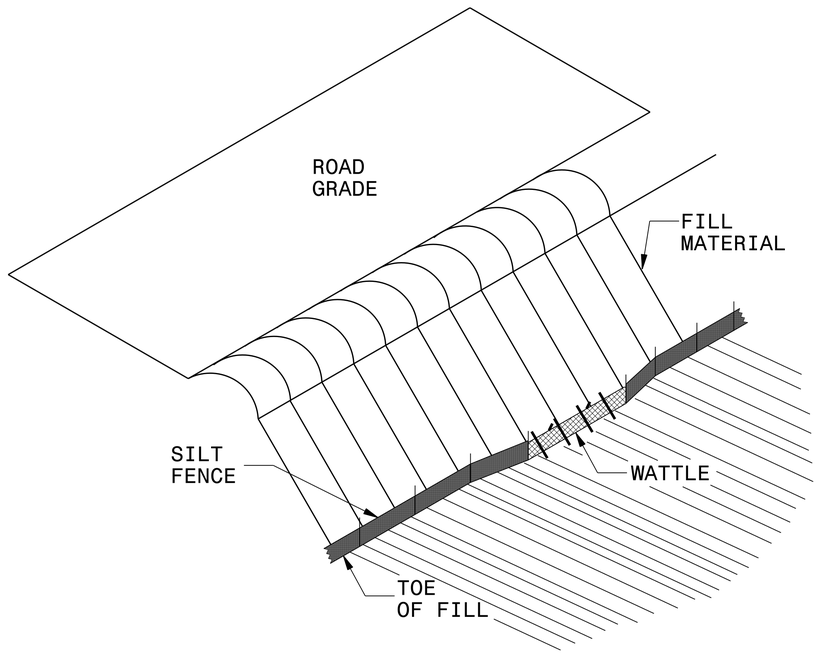

ISOMETRIC VIEW

NOTES:

USE MINIMUM 12 IN. DIAMETER EXCELSIOR WATTLE AND LENGTH OF 10 FT.

EXCAVATE A 1 TO 2 INCH TRENCH FOR WATTLE TO BE PLACED.

DO NOT PLACE WATTLE ON TOE OF SLOPE.

USE 2 FT. WOODEN STAKES WITH A 2 IN. BY 2 IN. NOMINAL CROSS SECTION.

INSTALL A MINIMUM OF 2 UPSLOPE STAKES AND 4 DOWNSLOPE STAKES AT AN ANGLE TO WEDGE WATTLE TO GROUND.

PROVIDE STAPLES MADE OF 0.125 IN. DIAMETER STEEL WIRE FORMED INTO A U SHAPE NOT LESS THAN 12″ IN LENGTH.

INSTALL STAPLES APPROXIMATELY EVERY 1 LINEAR FOOT ON BOTH SIDES OF WATTLE AND AT EACH END TO SECURE IT TO THE SOIL.

WATTLE INSTALLATION CAN BE ON OUTSIDE OF THE SILT FENCE AS DIRECTED.

INSTALL TEMPORARY SILT FENCE IN ACCORDANCE WITH SECTION 1605 OF THE STANDARD SPECIFICATIONS.

INSET A

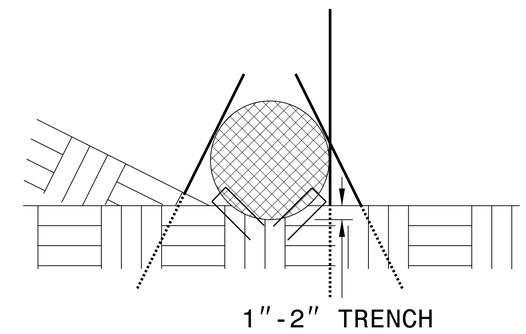

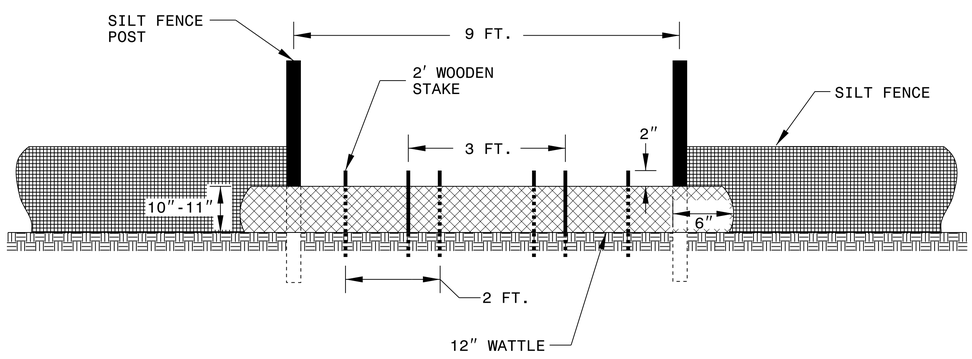

VIEW FROM SLOPE

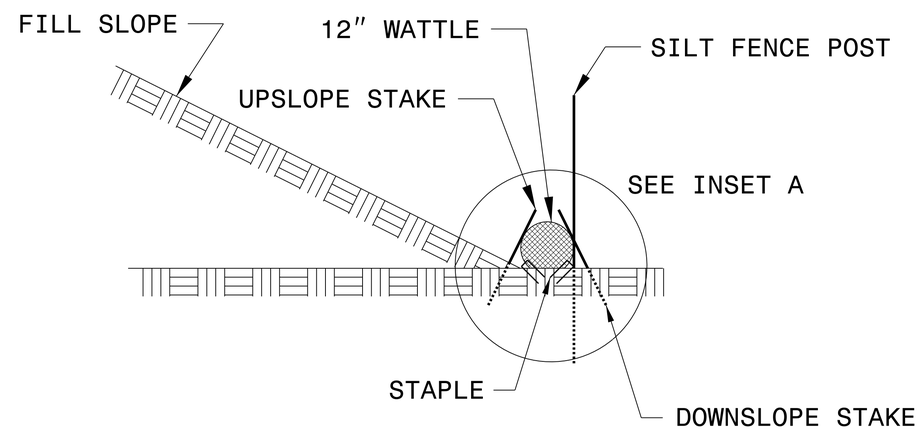

SIDE VIEW

PROJECT REFERENCE NO.	SHEET NO.
17BP.14.R.33	EC-5

Prepared in the Office of: Ecological Engineering, PLLC
NC FIRM LICENSE No: F-1148
151-SE Cary Parkway
Cary, NC 27518
(919) 557-0929

DIVISION OF HIGHWAYS
STATE OF NORTH CAROLINA

SOIL STABILIZATION TIMEFRAMES

SITE DESCRIPTION	STABILIZATION TIME	TIMEFRAME EXCEPTIONS
PERIMETER DIKES, SWALES, DITCHES AND SLOPES	7 DAYS	NONE
HIGH QUALITY WATER (HQW) ZONES	7 DAYS	NONE
SLOPES STEEPER THAN 3:1	7 DAYS	IF SLOPES ARE 10' OR LESS IN LENGTH AND ARE NOT STEEPER THAN 2:1, 14 DAYS ARE ALLOWED.
SLOPES 3:1 OR FLATTER	14 DAYS	7 DAYS FOR SLOPES GREATER THAN 50' IN LENGTH.
ALL OTHER AREAS WITH SLOPES FLATTER THAN 4:1	14 DAYS	NONE, EXCEPT FOR PERIMETERS AND HQW ZONES.

PROJECT REFERENCE NO.	SHEET NO.
17BP.14.R.15	EC-6
R/W SHEET NO.	

Prepared in the Office of: Ecological Engineering, PLLC
NC FIRM LICENSE No: F-1148
1151 SE Cary Parkway
Cary, NC 27518
(919) 557-0929

WATTLE DETAIL

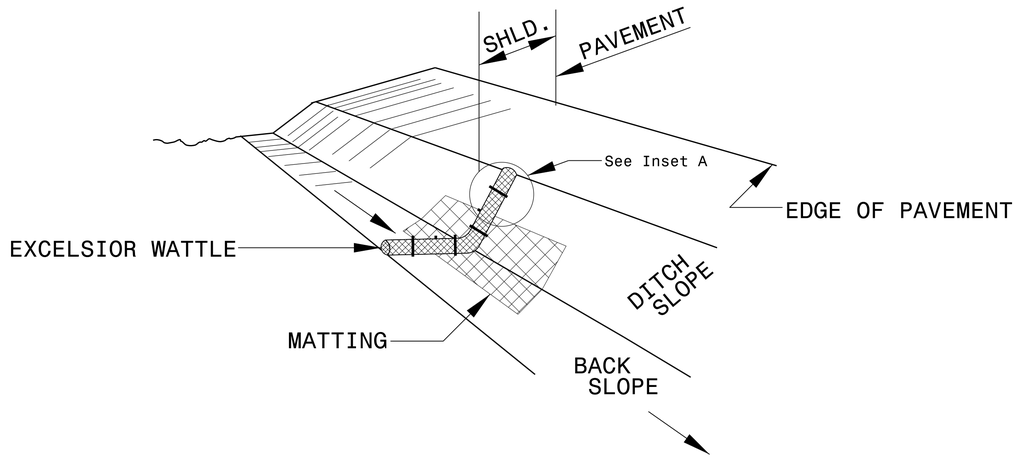

ISOMETRIC VIEW

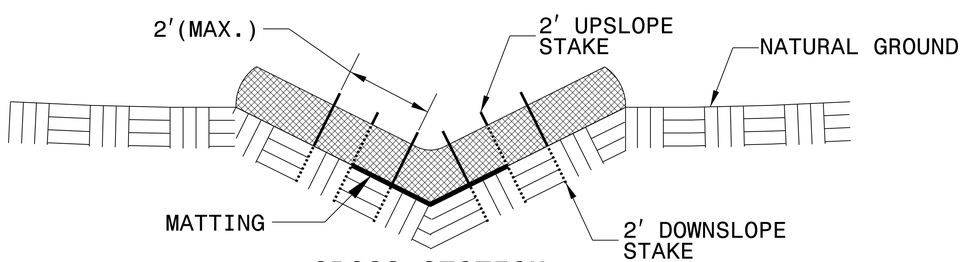

CROSS SECTION VEE DITCH

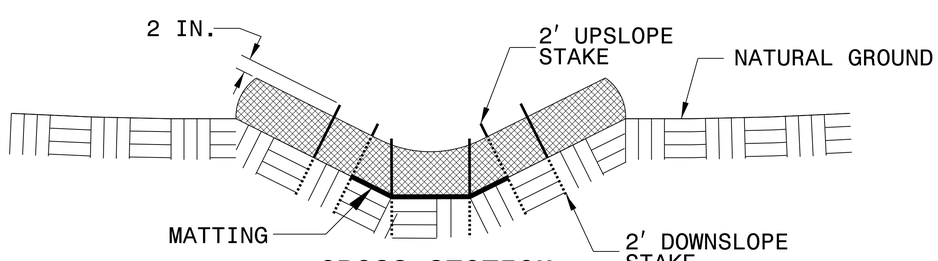

CROSS SECTION TRAPEZOIDAL DITCH

NOTES:

USE MINIMUM 12 IN. DIAMETER EXCELSIOR WATTLE.

USE 2 FT. WOODEN STAKES WITH A 2 IN. BY 2 IN. NOMINAL CROSS SECTION.

<u>ONLY</u> INSTALL WATTLE(S) TO A HEIGHT IN DITCH SO FLOW WILL NOT WASH AROUND WATTLE AND SCOUR DITCH SLOPES AND AS DIRECTED.

INSTALL A MINIMUM OF 2 UPSLOPE STAKES AND 4 DOWNSLOPE STAKES AT AN ANGLE TO WEDGE WATTLE TO BOTTOM OF DITCH.

PROVIDE STAPLES MADE OF 0.125 IN. DIAMETER STEEL WIRE FORMED INTO A U SHAPE NOT LESS THAN 12" IN LENGTH.

INSTALL STAPLES APPROXIMATELY EVERY 1 LINEAR FOOT ON BOTH SIDES OF WATTLE AND AT EACH END TO SECURE IT TO THE SOIL.

INSTALL MATTING IN ACCORDANCE WITH SECTION 1631 OF THE STANDARD SPECIFICATIONS.

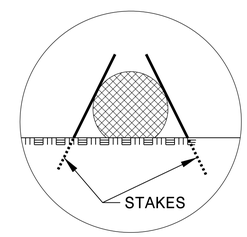

INSET A

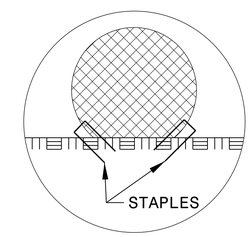

INSET B

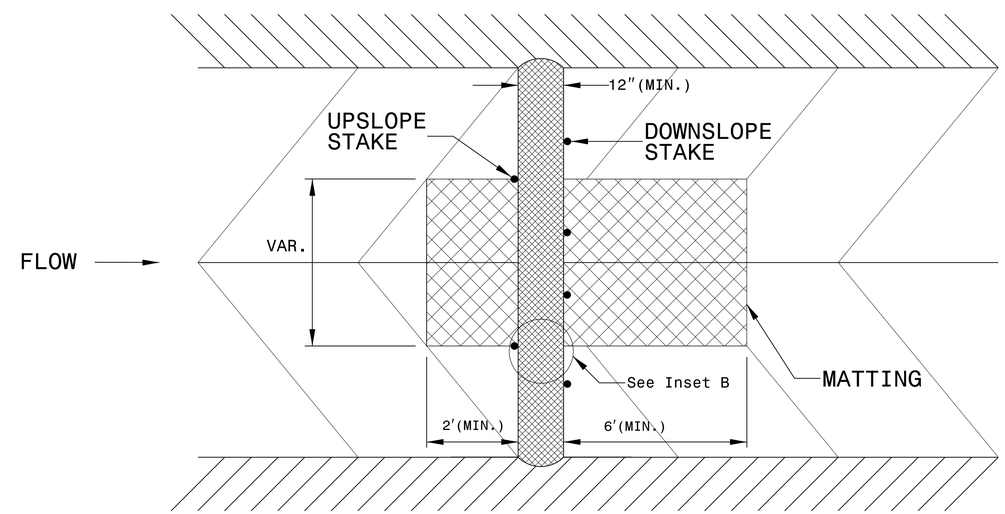

TOP VIEW

PROJECT REFERENCE NO.	SHEET NO.
17BP.14.R.15	UO-1
R/W SHEET NO.	

Prepared in the Office of: AECOM
NC FIRM LICENSE No: F-0342
701 Corporate Center Drive, Suite 475
Raleigh, NC 27607
(919) 854-6200 - (919) 854-6259(FAX)

UTILITIES BY OTHERS BRIDGE #300

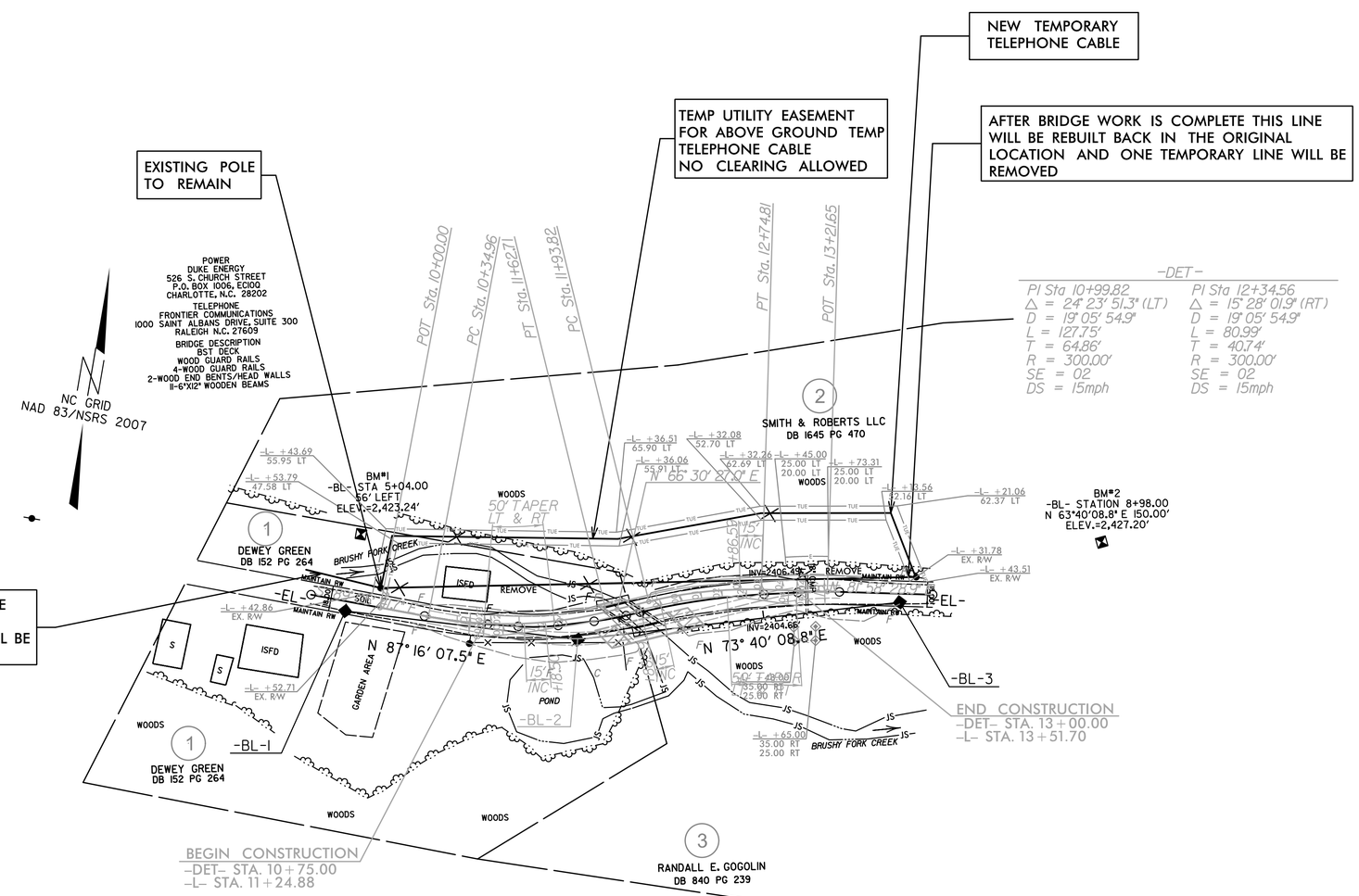

REVISIONS

8/17/99

USER: hlin
DATE: 2/11/2013
TIME: 2:33:12 PM
DGN: 49-300_uo_pshdgn

PROJ. REFERENCE NO.	SHEET NO.
17BP.14.R.15	X-1A

STATE OF NORTH CAROLINA
DIVISION OF HIGHWAYS

NOTE: EMBANKMENT COLUMN INCLUDES BACKFILL FOR UNDERCUT

CROSS-SECTION SUMMARY

Station L	Uncl. Exc. (cu. yd.)	Embt (cu. yd.)
10+75.00	0	0
11+00.00	4	0
11+25.00	6	0
11+50.00	3	3
11+75.00	3	11
12+00.00	12	8
12+18.68	10	6

Station L	Uncl. Exc. (cu. yd.)	Embt (cu. yd.)
12+61.30	0	0
12+75.00	5	6
13+00.00	8	10
13+25.00	6	7
13+50.00	5	3
13+75.00	4	6
14+00.00	5	8
14+25.00	3	4

Station Det	Uncl. Exc. (cu. yd.)	Embt (cu. yd.)
10+75.00	0	0
11+00.00	1	0
11+25.00	1	0
11+50.00	1	0
11+64.00	1	0

Station Det	Uncl. Exc. (cu. yd.)	Embt (cu. yd.)
11+83.00	0	0
12+00.00	1	0
12+25.00	1	0
12+50.00	0	2
12+75.00	0	2
13+00.00	0	1

Approximate quantities only. Unclassified excavation, borrow excavation, shoulder borrow, fine grading, clearing and grubbing, breaking of existing pavement and removal of existing pavement will be paid for at the lump sum price for "Grading".

5/28/99
15-FEB-2013 11:09
J:\11 - AECOM Jackson County Bridges\BR-300\Current Drawings\300_Rdy_xla.dgn
$$$$USERNAME$$$$

PROJ. REFERENCE NO.	SHEET NO.
17BP.14.R.15	X-1

Prepared in the Office of: SUMMIT DESIGN AND ENGINEERING SERVICES
NC FIRM LICENSE No: P-0339
504 Meadowlands Drive
Hillsborough, NC 27278
(919) 732-3883 - (919) 732-6676 (FAX)

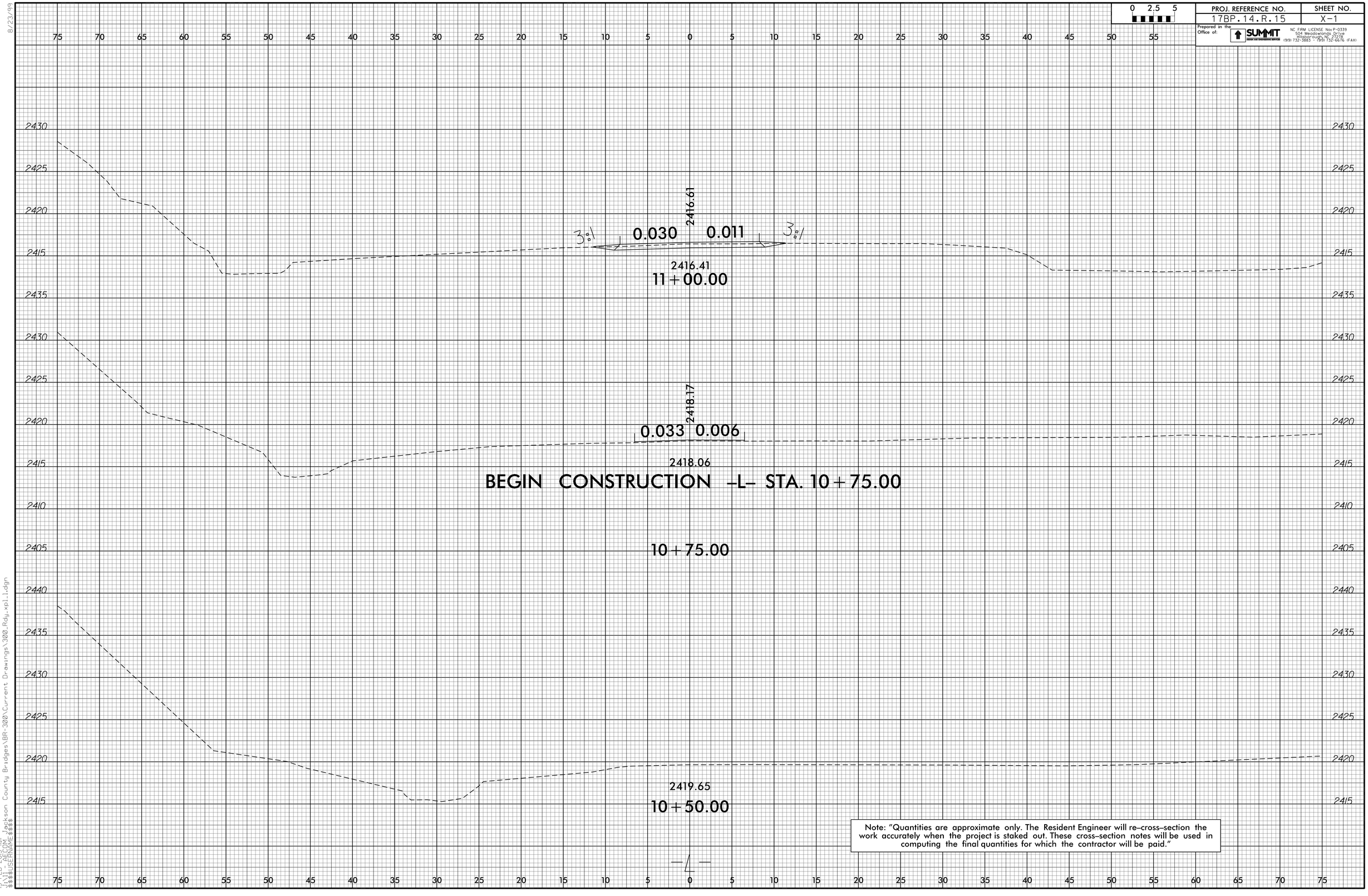

Note: "Quantities are approximate only. The Resident Engineer will re-cross-section the work accurately when the project is staked out. These cross-section notes will be used in computing the final quantities for which the contractor will be paid."

8/23/99

15-FEB-2013 11:11
J:\11 - AECOM Jackson County Bridges\BR-300\Current Drawings\300_Rdy_xpl_1.dgn
$$$$USERNAME$$$$

PROJ. REFERENCE NO.	SHEET NO.
17BP.14.R.15	X-2

Prepared in the Office of: SUMMIT DESIGN AND ENGINEERING SERVICES
NC FIRM LICENSE No: P-0339
504 Meadowlands Drive
Hillsborough, NC 27278
(919) 732-3883 - (919) 732-6676 (FAX)

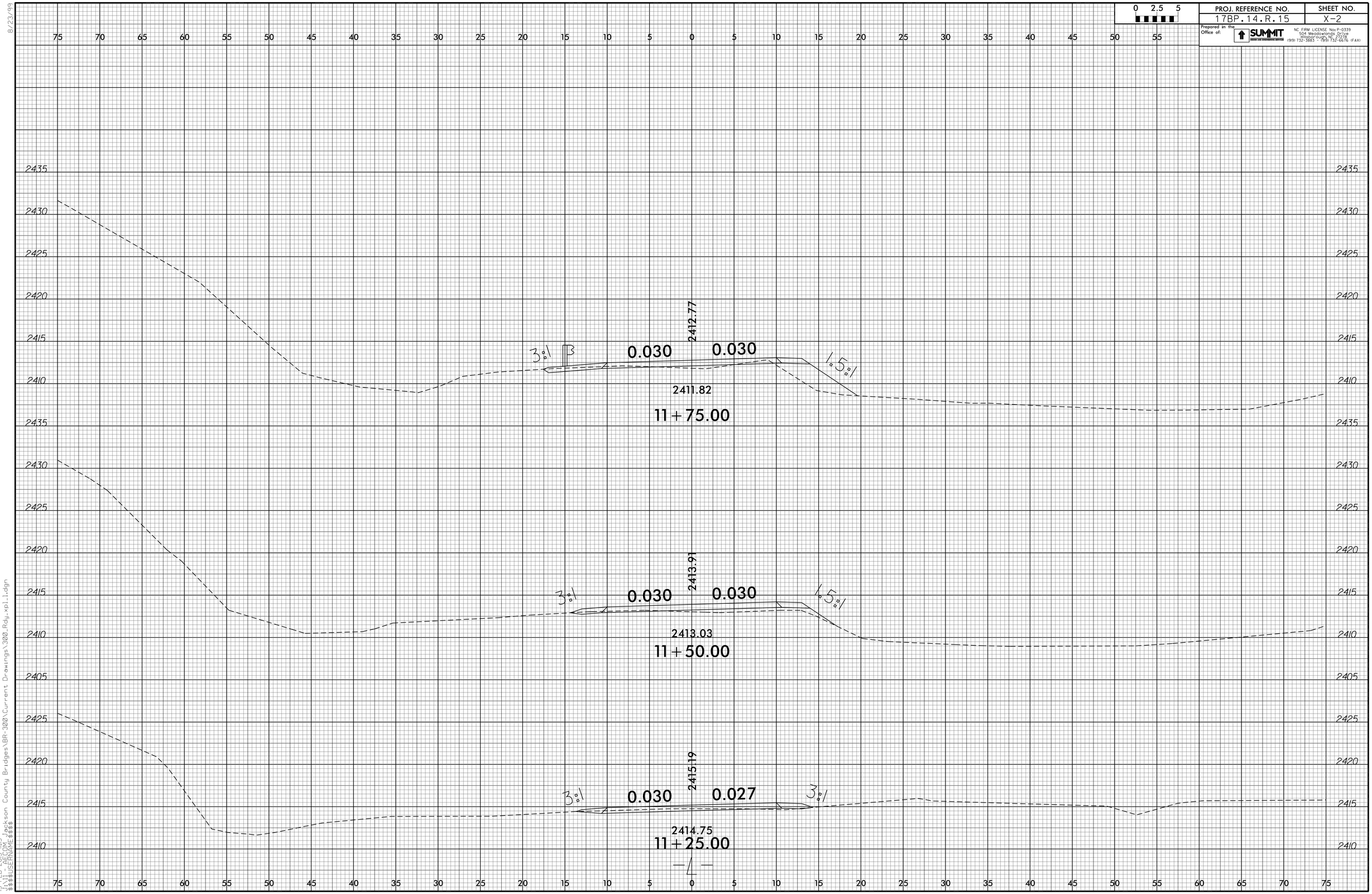

8/23/99
15-FEB-2013 11:13
J:\11 - AECOM Jackson County Bridges\BR-300\Current Drawings\300_Rdy_xpl_1.dgn
$$$$USERNAME$$$$

PROJ. REFERENCE NO.	SHEET NO.
17BP.14.R.15	X-3

Prepared in the Office of: SUMMIT DESIGN AND ENGINEERING SERVICES
NC FIRM LICENSE No: P-0339
504 Meadowlands Drive
Hillsborough, NC 27278
(919) 732-3883 - (919) 732-6676 (FAX)

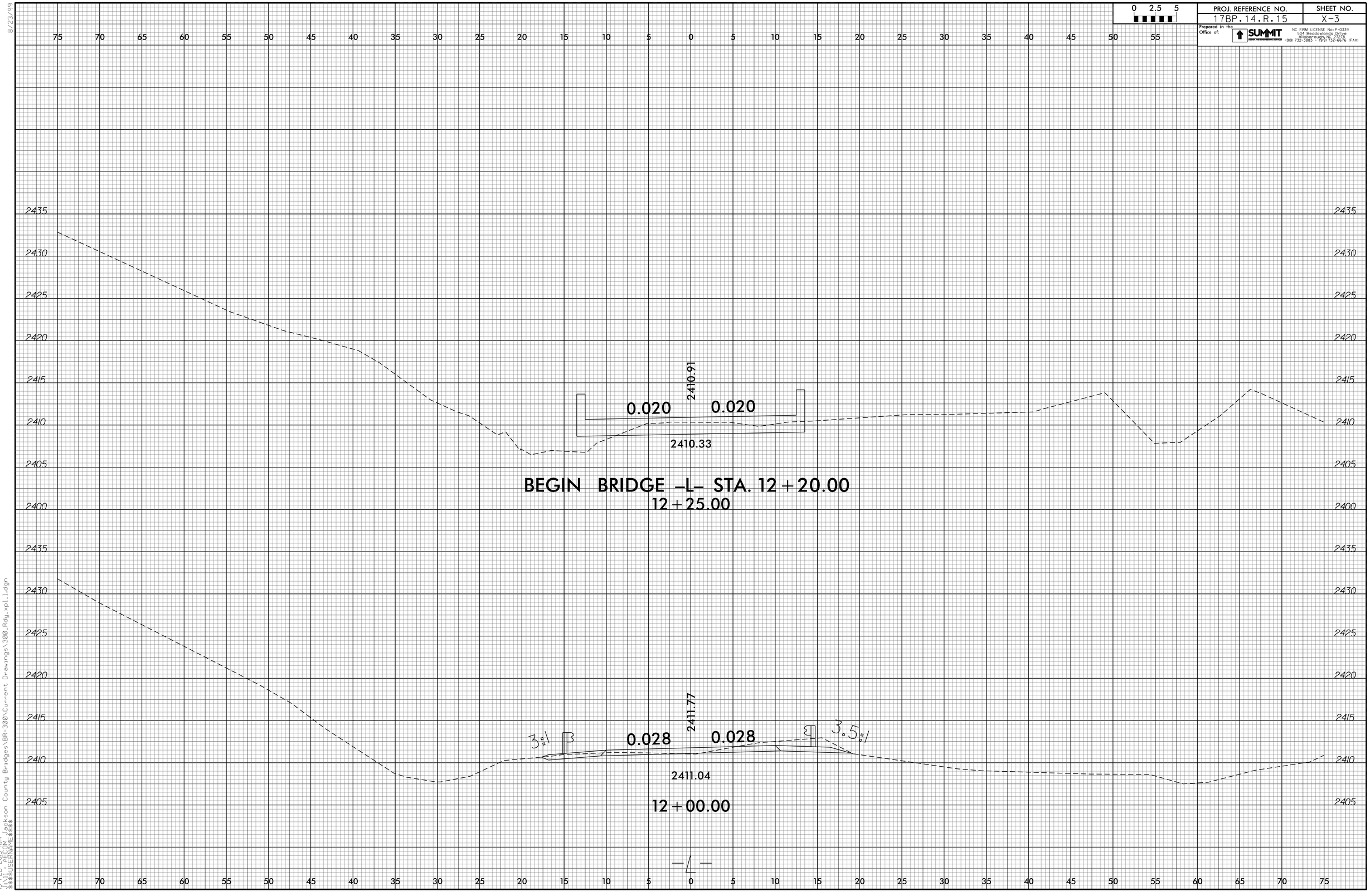

8/23/99

15-FEB-2013 11:14
J:\11 - AECOM Jackson County Bridges\BR-300\Current Drawings\300_Rdy_xpl_1.dgn
$$$$USERNAME$$$$

PROJ. REFERENCE NO.	SHEET NO.
17BP.14.R.15	X-4

Prepared in the Office of: SUMMIT DESIGN AND ENGINEERING SERVICES
NC FIRM LICENSE No: P-0339
504 Meadowlands Drive
Hillsborough, NC 27278
(919) 732-3883 - (919) 732-6676 (FAX)

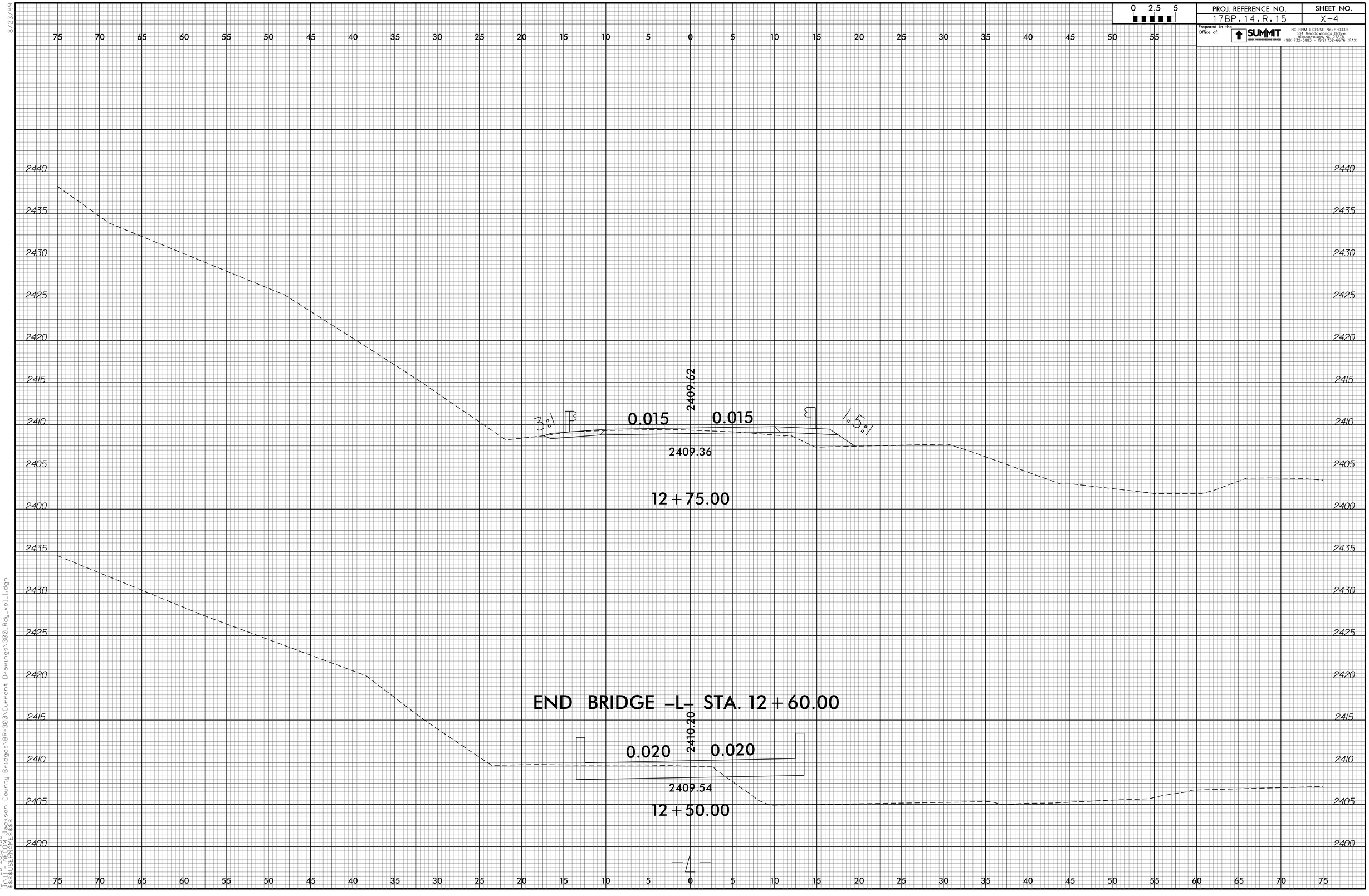

8/23/99
15-FEB-2013 11:16
J:\11 - AECOM Jackson County Bridges\BR-300\Current Drawings\300_Rdy_xpl_1.dgn
$$$$USERNAME$$$$

PROJ. REFERENCE NO.	SHEET NO.
17BP.14.R.15	X-5

Prepared in the Office of: SUMMIT DESIGN AND ENGINEERING SERVICES
NC FIRM LICENSE No: P-0339
504 Meadowlands Drive
Hillsborough, NC 27278
(919) 732-3883 - (919) 732-6676 (FAX)

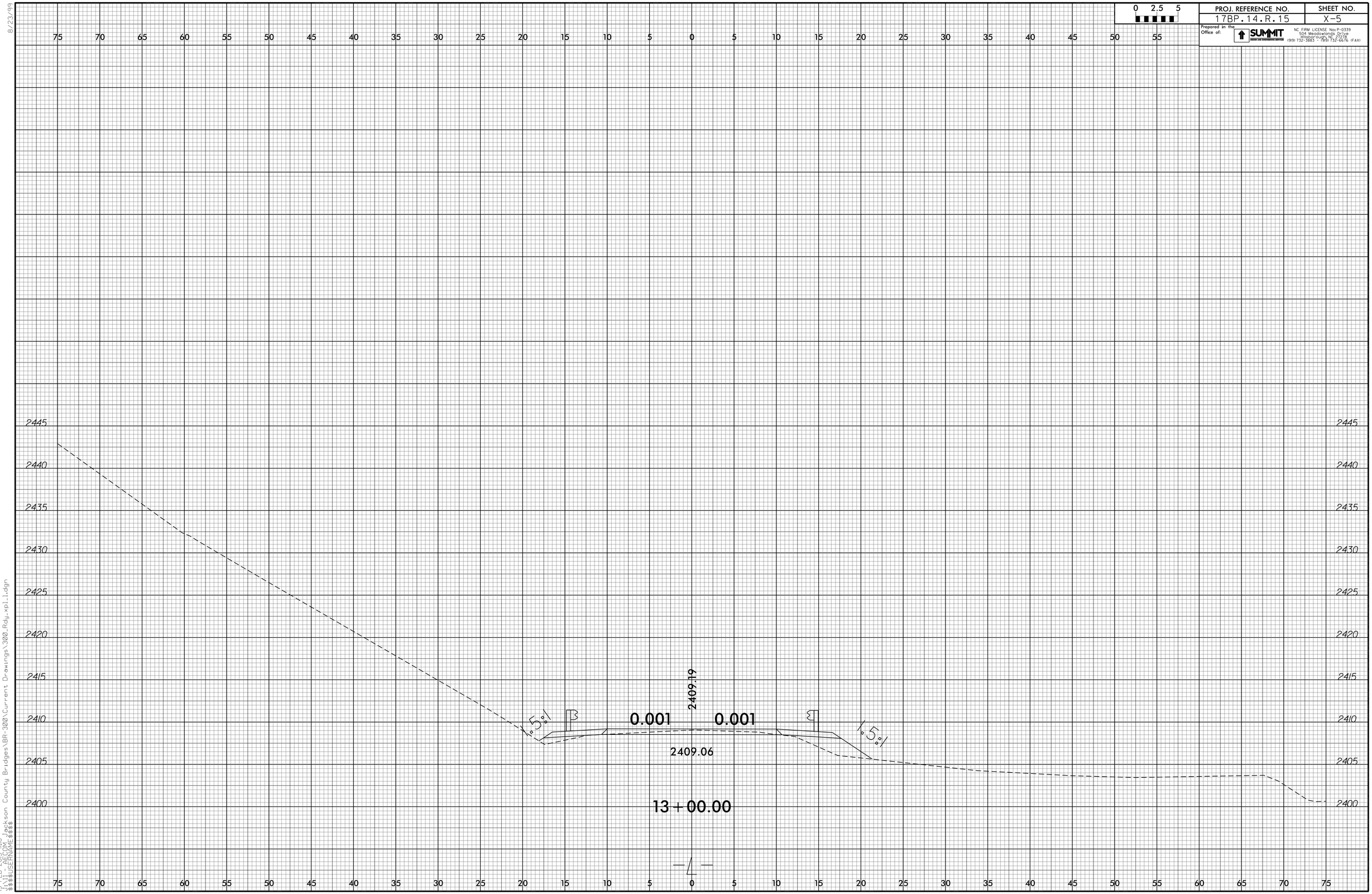

8/23/99
15-FEB-2013 11:18
J:\11 - AECOM Jackson County Bridges\BR-300\Current Drawings\300_Rdy_xpl_1.dgn
$$$$USERNAME$$$$

PROJ. REFERENCE NO.	SHEET NO.
17BP.14.R.15	X-6

Prepared in the Office of: SUMMIT DESIGN AND ENGINEERING SERVICES
NC FIRM LICENSE No: P-0339
504 Meadowlands Drive
Hillsborough, NC 27278
(919) 732-3883 - (919) 732-6676 (FAX)

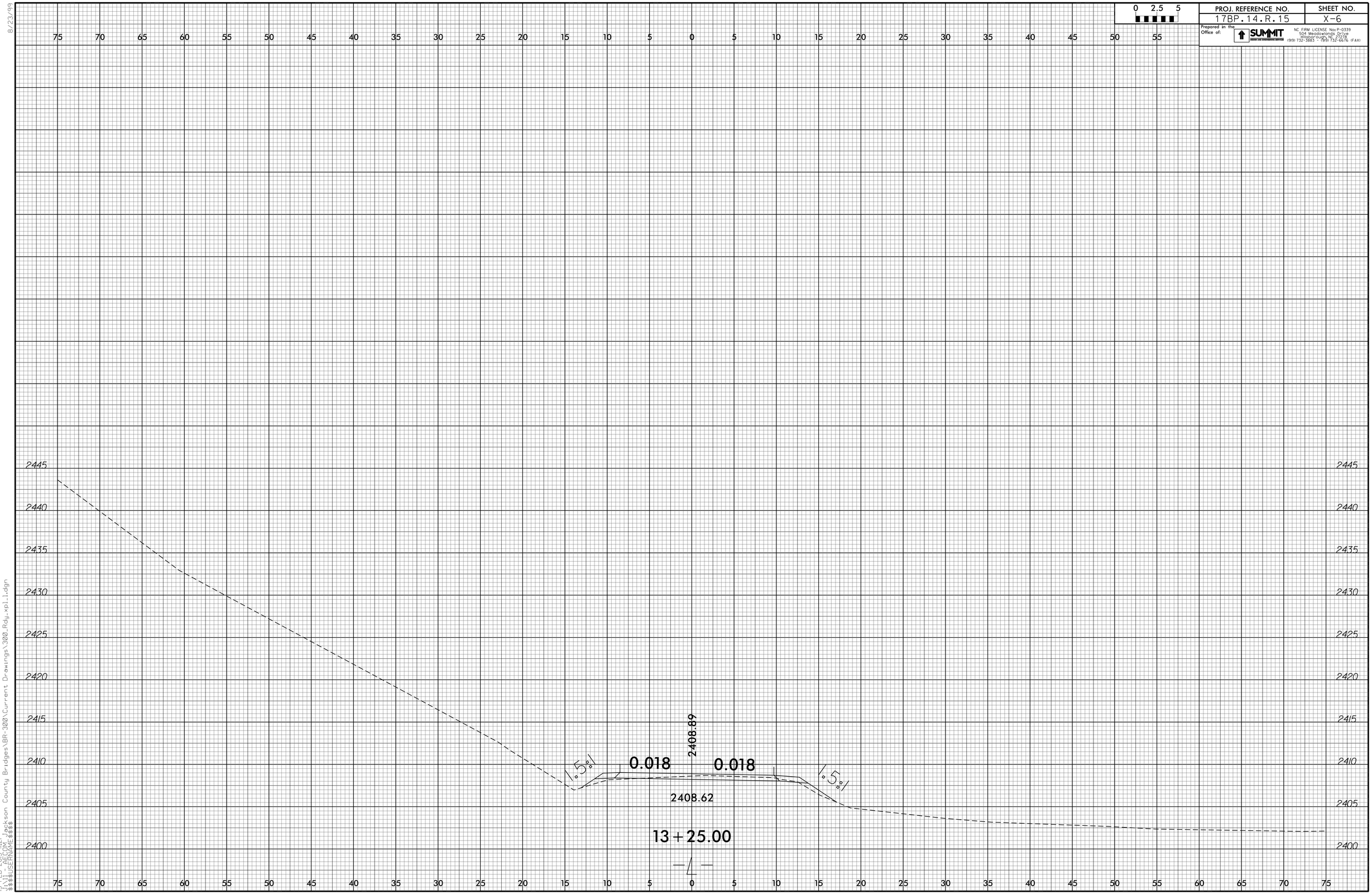

8/23/99
15-FEB-2013 11:21
J:\11 - AECOM Jackson County Bridges\BR-300\Current Drawings\300_Rdy_xpl_1.dgn
$$$$USERNAME$$$$

PROJ. REFERENCE NO.	SHEET NO.
17BP.14.R.15	X-7

Prepared in the Office of: SUMMIT DESIGN AND ENGINEERING SERVICES
NC FIRM LICENSE No: P-0339
504 Meadowlands Drive
Hillsborough, NC 27278
(919) 732-3883 - (919) 732-6676 (FAX)

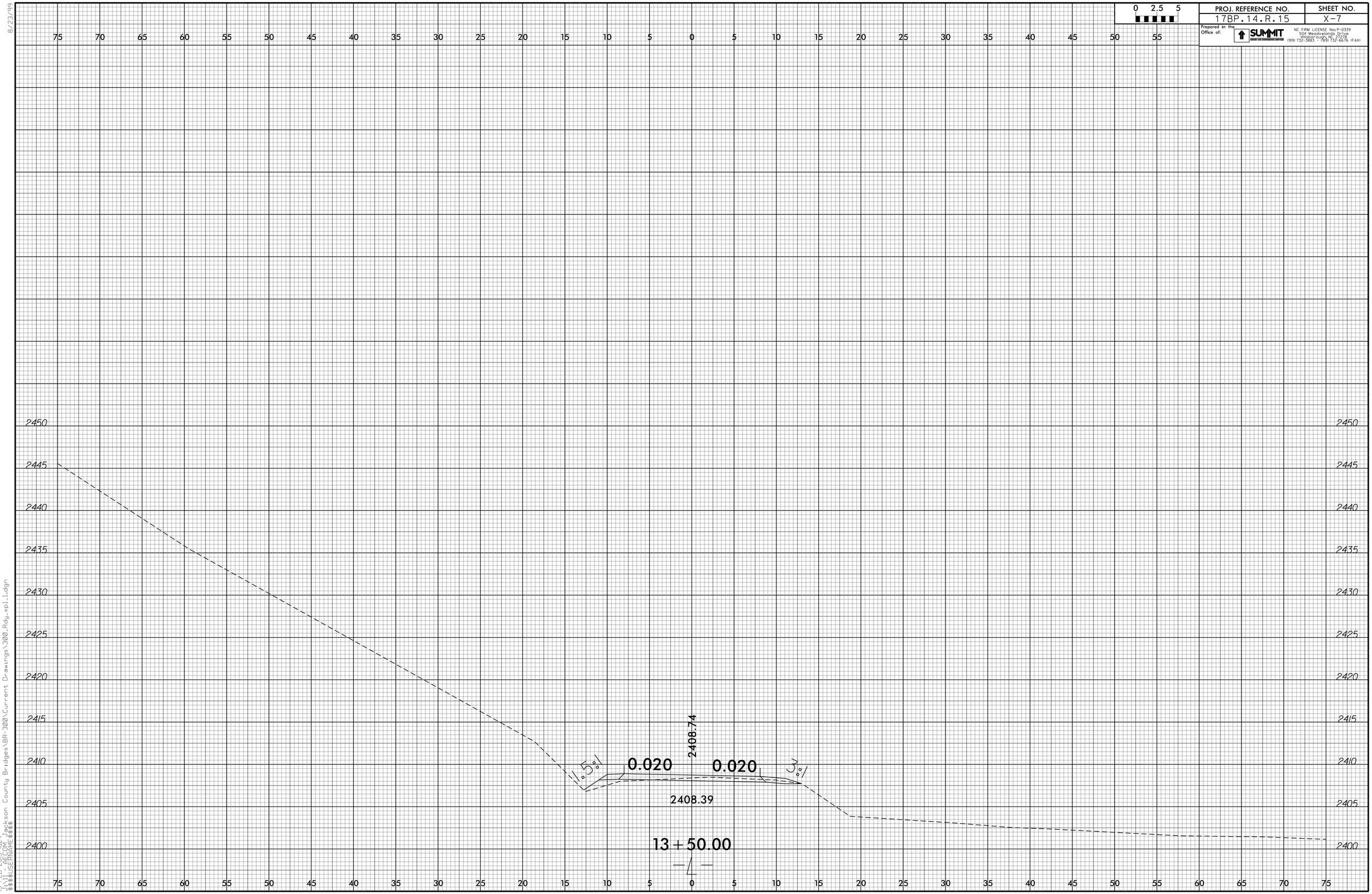

8/23/99

15-FEB-2013 11:24
:\11 - AECOM Jackson County Bridges\BR-300\Current Drawings\300_Rdy_xpl_1.dgn
$$$$USERNAME$$$$

PROJ. REFERENCE NO.	SHEET NO.
17BP.14.R.15	X-8

Prepared in the Office of: SUMMIT DESIGN AND ENGINEERING SERVICES
NC FIRM LICENSE No: P-0339
504 Meadowlands Drive
Hillsborough, NC 27278
(919) 732-3883 - (919) 732-6676 (FAX)

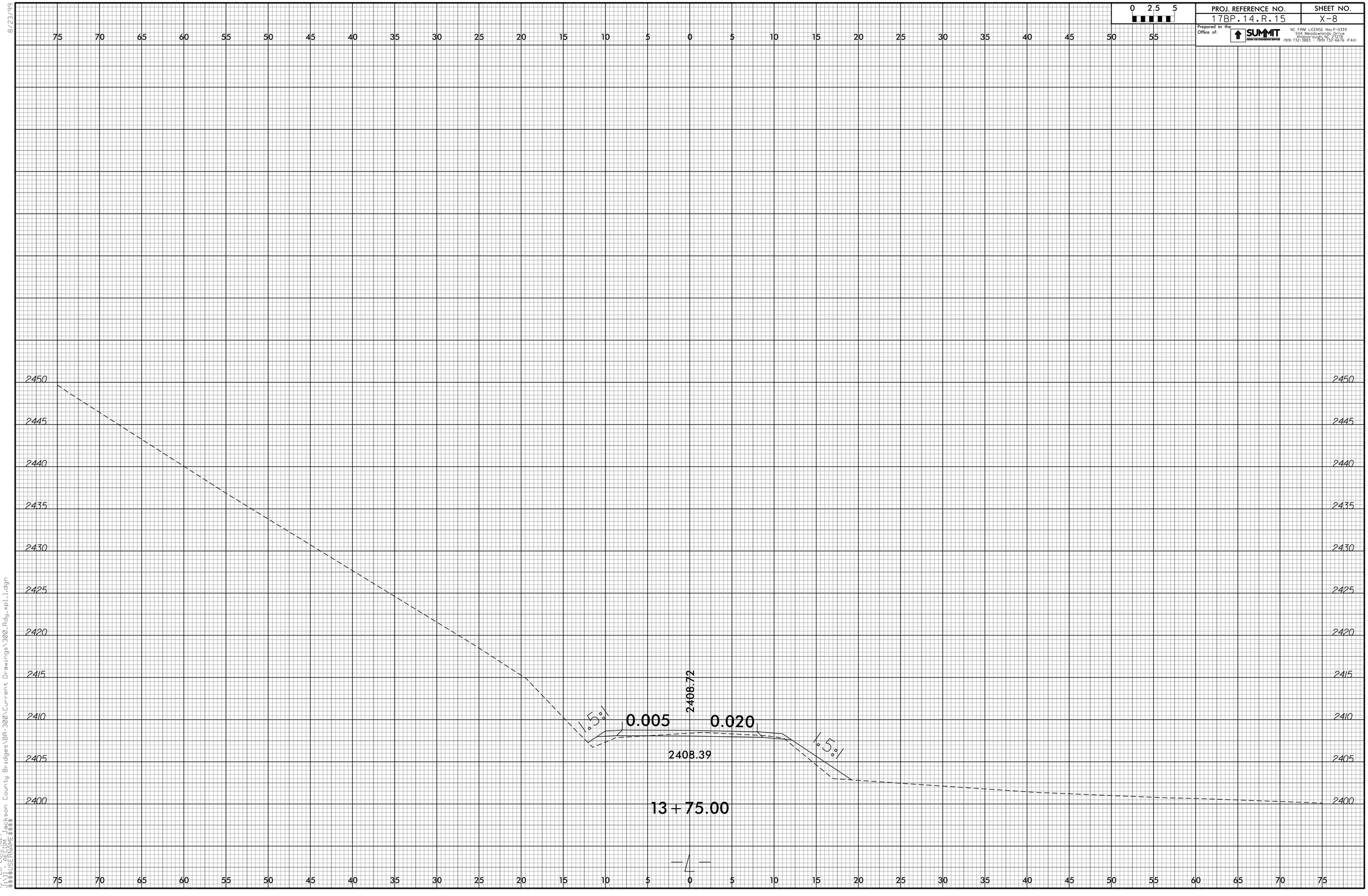

8/23/99

15-FEB-2013 11:27
J:\11 - AECOM Jackson County Bridges\BR-300\Current Drawings\300_Rdy_xpl_1.dgn
$$$$USERNAME$$$$

PROJ. REFERENCE NO.	SHEET NO.
17BP.14.R.15	X-9

Prepared in the Office of: SUMMIT DESIGN AND ENGINEERING SERVICES
NC FIRM LICENSE No: P-0339
504 Meadowlands Drive
Hillsborough, NC 27278
(919) 732-3883 - (919) 732-6676 (FAX)

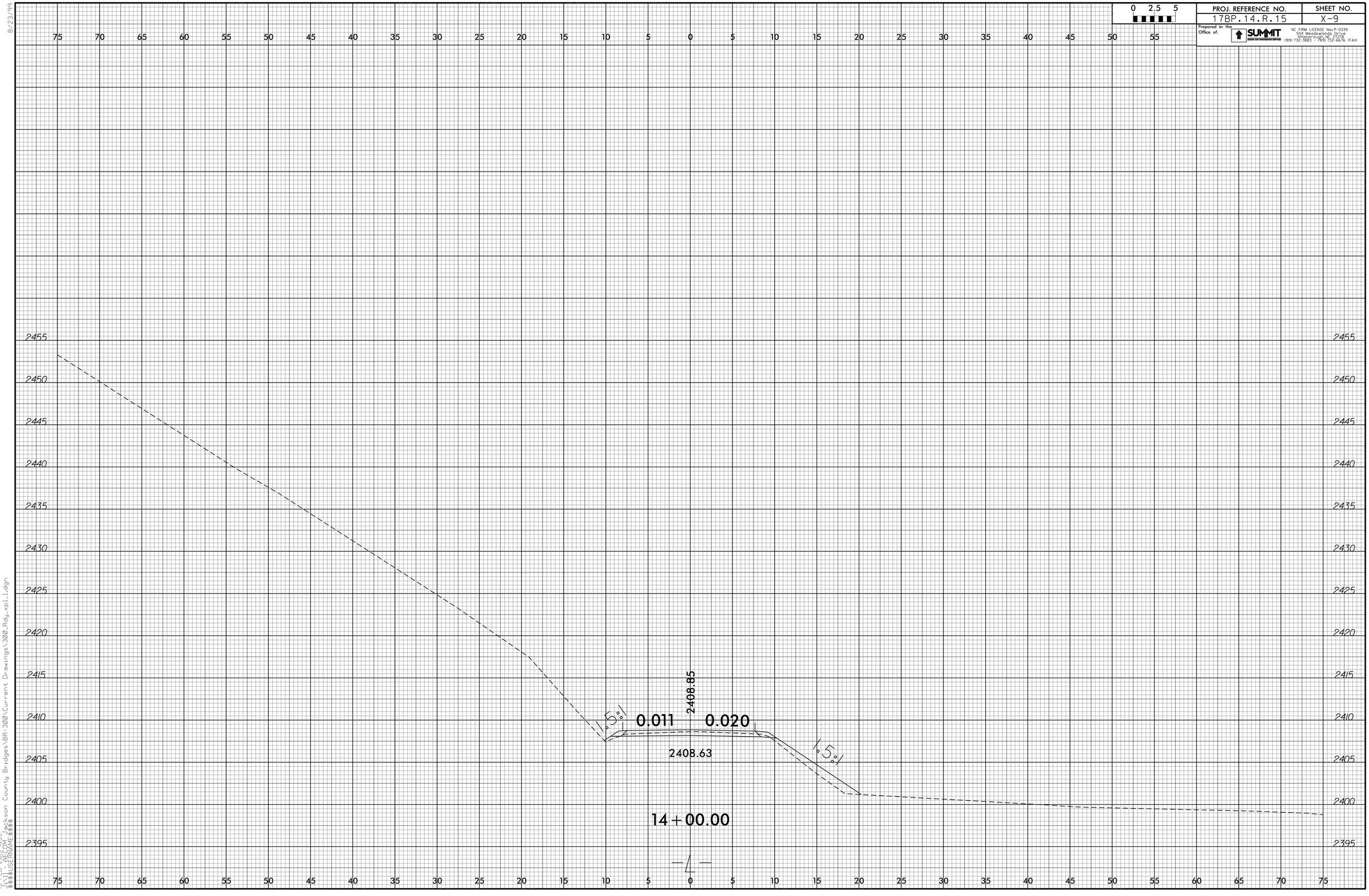

8/23/99
15-FEB-2013 11:33
J:\11 - AECOM Jackson County Bridges\BR-300\Current Drawings\300_Rdy_xpl_1.dgn
$$$$USERNAME$$$$

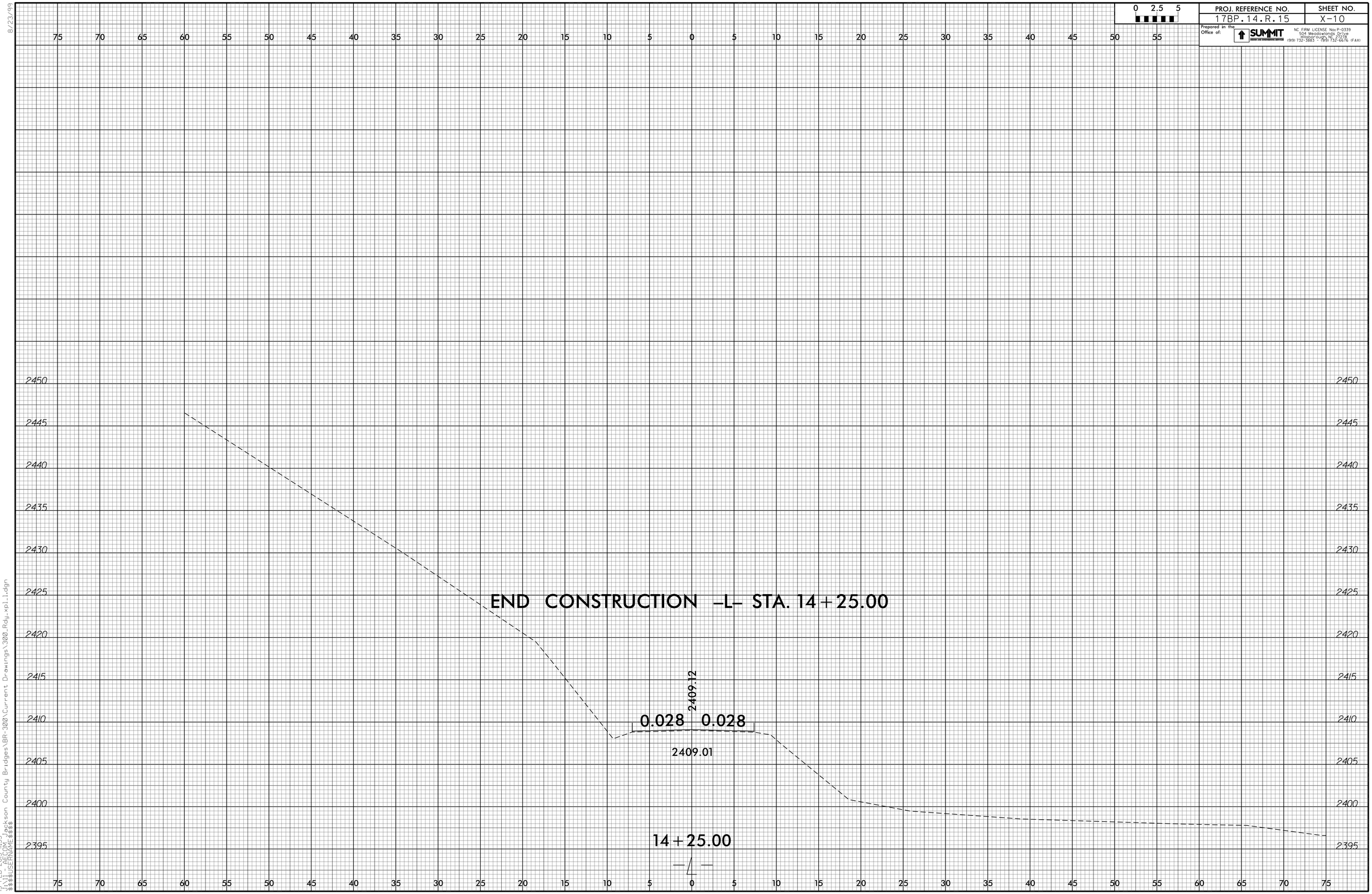

8/23/99

15-FEB-2013 11:35
J:\11 - AECOM Jackson County Bridges\BR-300\Current Drawings\300_Rdy_xpl_1.dgn
$$$$USERNAME$$$$

PROJ. REFERENCE NO.	SHEET NO.
17BP.14.R.15	X-11

Prepared in the Office of: SUMMIT DESIGN AND ENGINEERING SERVICES
NC FIRM LICENSE No: P-0339
504 Meadowlands Drive
Hillsborough, NC 27278
(919) 732-3883 - (919) 732-6676 (FAX)

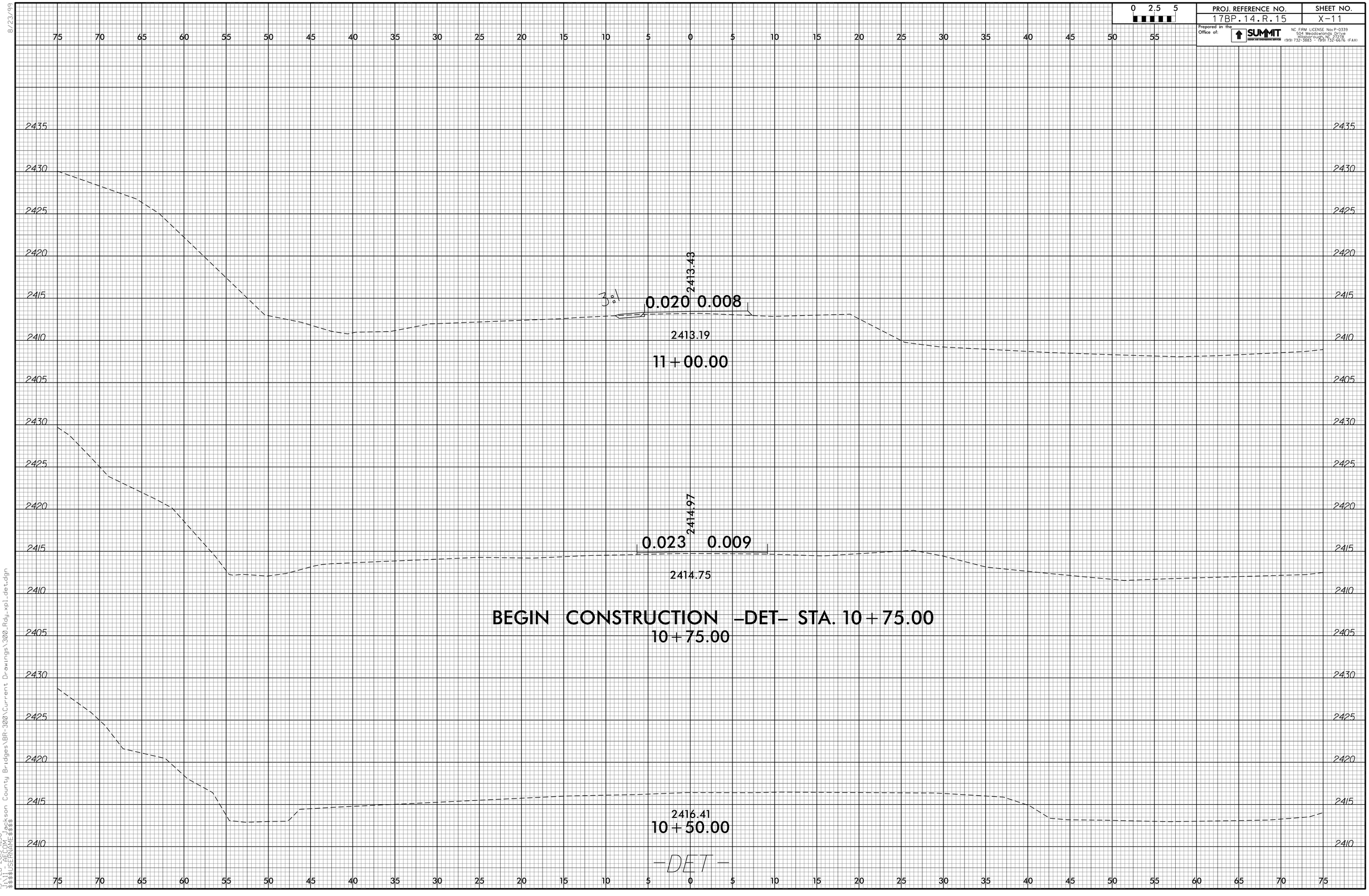

8/23/99
15-FEB-2013 11:36
J:\11 - AECOM Jackson County Bridges\BR-300\Current Drawings\300_Rdy_xpl_det.dgn
$$$$USERNAME$$$$

PROJ. REFERENCE NO.	SHEET NO.
17BP.14.R.15	X-12

Prepared in the Office of: SUMMIT DESIGN AND ENGINEERING SERVICES
NC FIRM LICENSE Nos P-0339
504 Meadowlands Drive
Hillsborough, NC 27278
(919) 732-3883 - (919) 732-6676 (FAX)

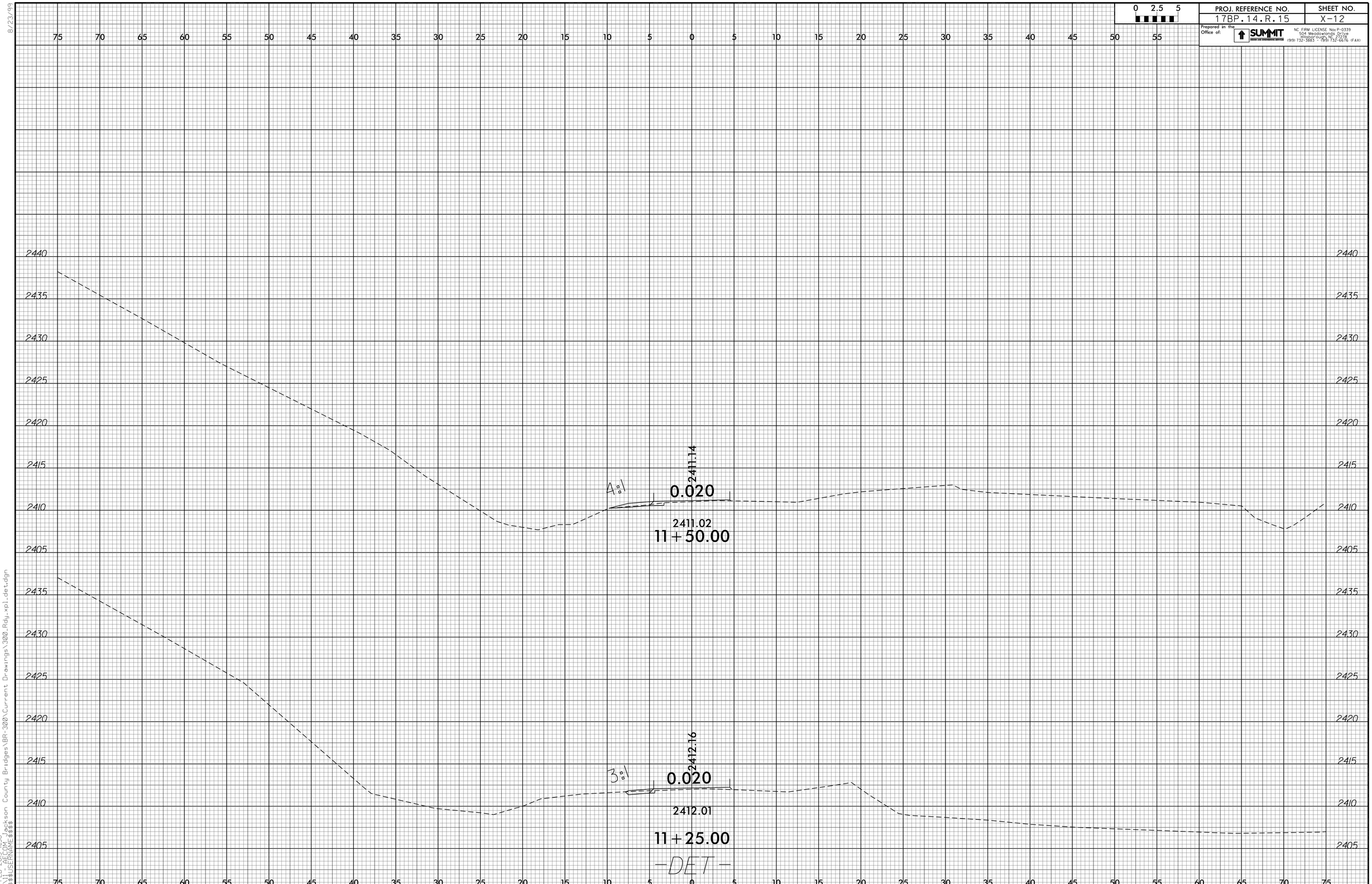

8/23/99
15-FEB-2013 14:38
R:\Traffic\Jackson County Bridges\BR-300\Current Drawings\300_Rdy_xpl_det.dgn
$$$$USERNAME$$$$

PROJ. REFERENCE NO.	SHEET NO.
17BP.14.R.15	X-13

Prepared in the Office of: SUMMIT DESIGN AND ENGINEERING SERVICES
NC FIRM LICENSE Nos P-0339
504 Meadowlands Drive
Hillsborough, NC 27278
(919) 732-3883 - (919) 732-6676 (FAX)

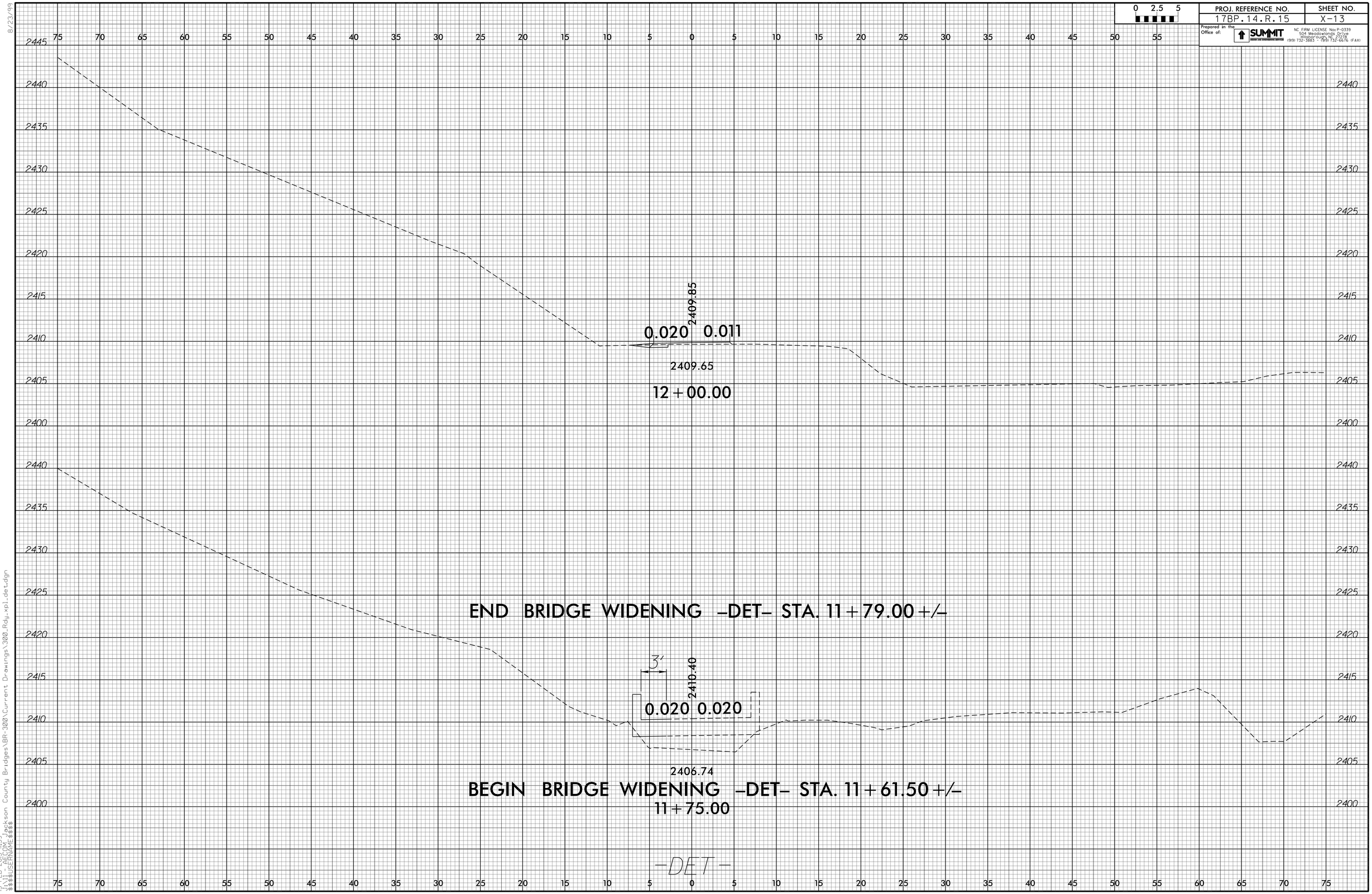

8/23/99
15-FEB-2013 11:39
J:\11_GEOPAK\Jackson County Bridges\BR-300\Current Drawings\300_Rdy_xpl_det.dgn
$$$$USERNAME$$$$

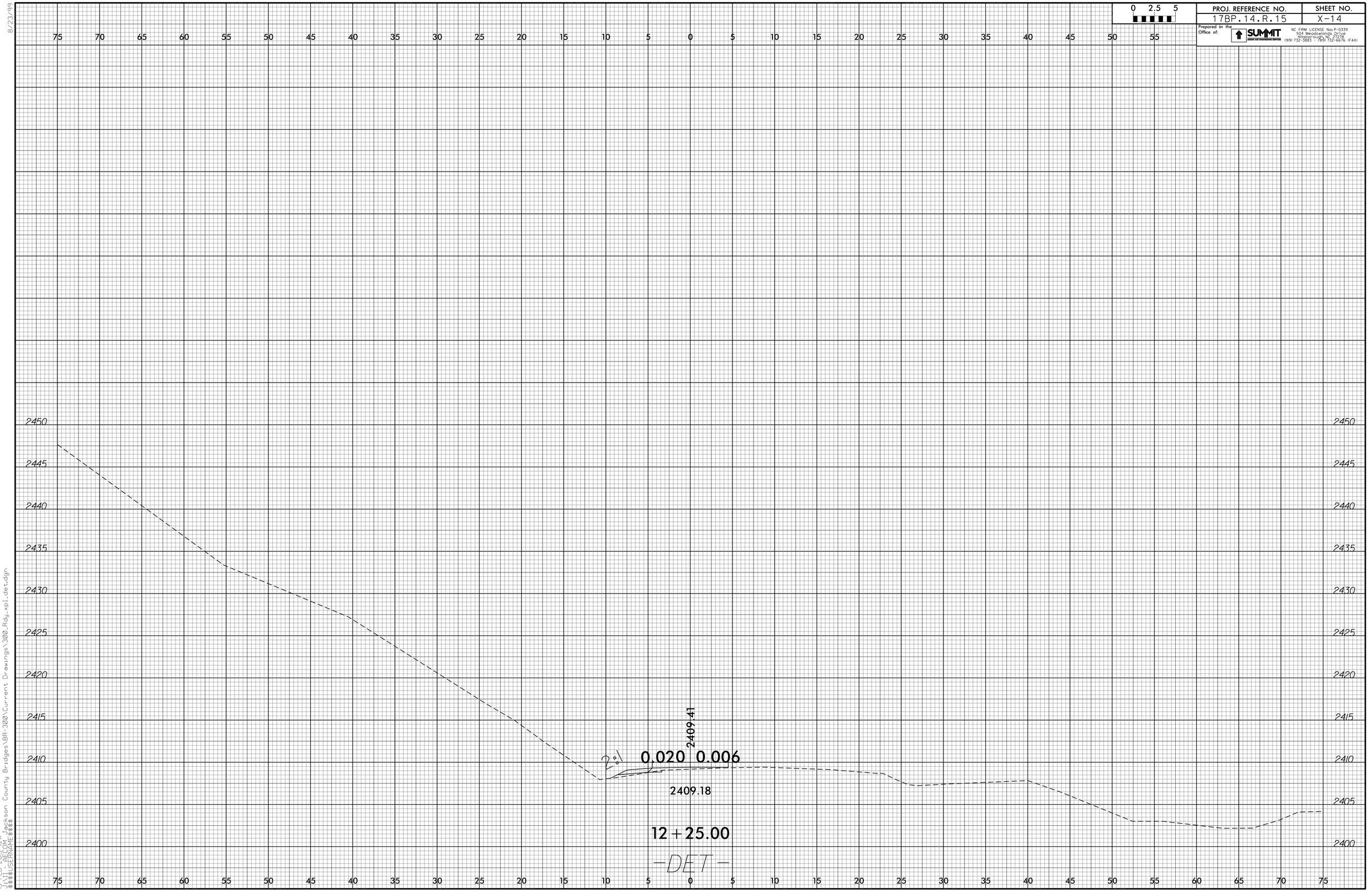

8/23/99

15-FEB-2013 11:41
J:\11 - AECOM Jackson County Bridges\BR-300\Current Drawings\300_Rdy_xpl_det.dgn
$$$$USERNAME$$$$

PROJ. REFERENCE NO.	SHEET NO.
17BP.14.R.15	X-15

Prepared in the Office of: SUMMIT DESIGN AND ENGINEERING SERVICES
NC FIRM LICENSE Nos P-0339
504 Meadowlands Drive
Hillsborough, NC 27278
(919) 732-3883 - (919) 732-6676 (FAX)

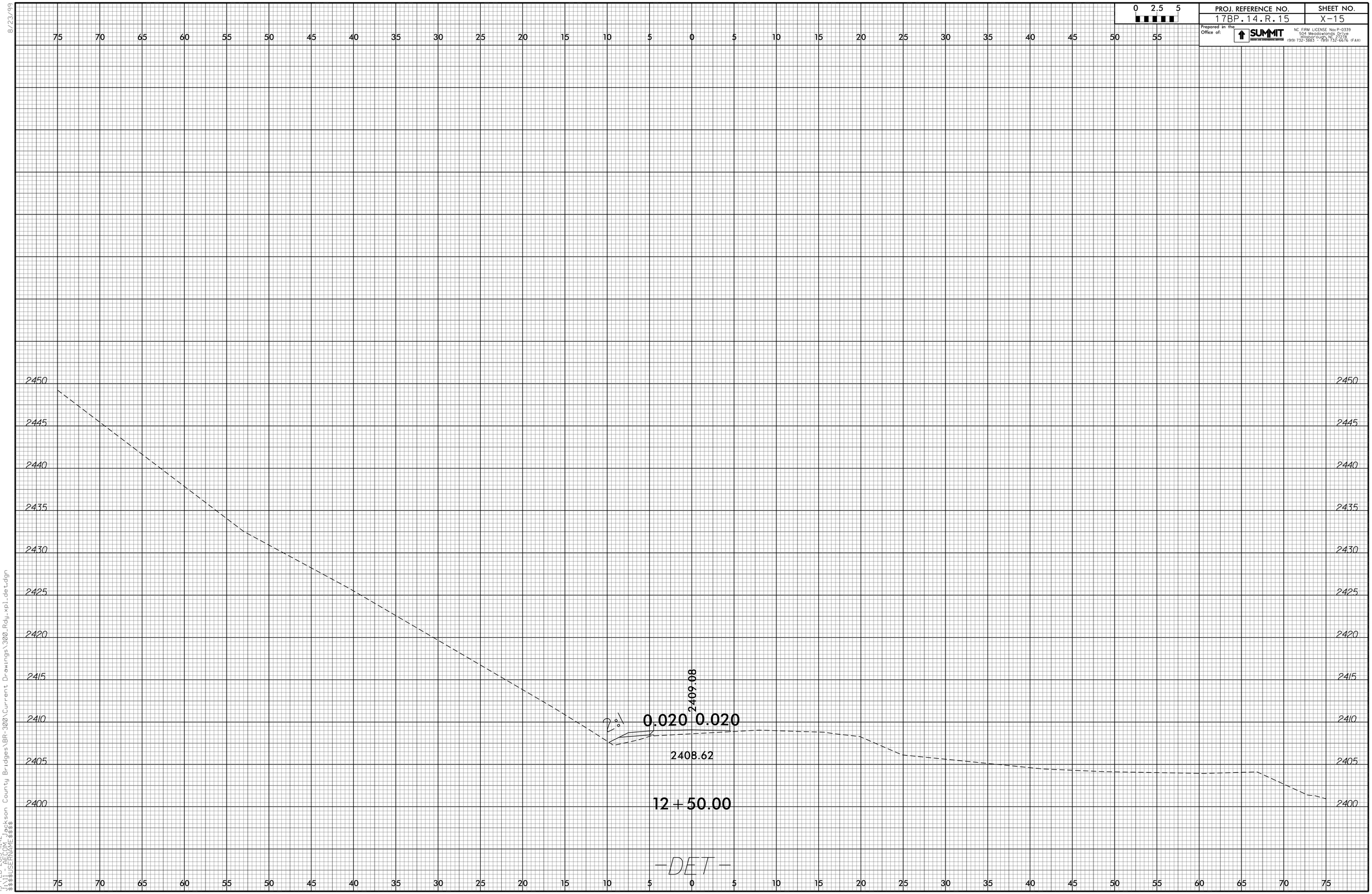

8/23/99
15-FEB-2013 14:42
J:\1_SECTION\Jackson County Bridges\BR-300\Current Drawings\300_Rdy_xpl_det.dgn
$$$$USERNAME$$$$

PROJ. REFERENCE NO.	SHEET NO.
17BP.14.R.15	X-16

Prepared in the Office of: SUMMIT DESIGN AND ENGINEERING SERVICES
NC FIRM LICENSE No: P-0339
504 Meadowlands Drive
Hillsborough, NC 27278
(919) 732-3883 - (919) 732-6676 (FAX)

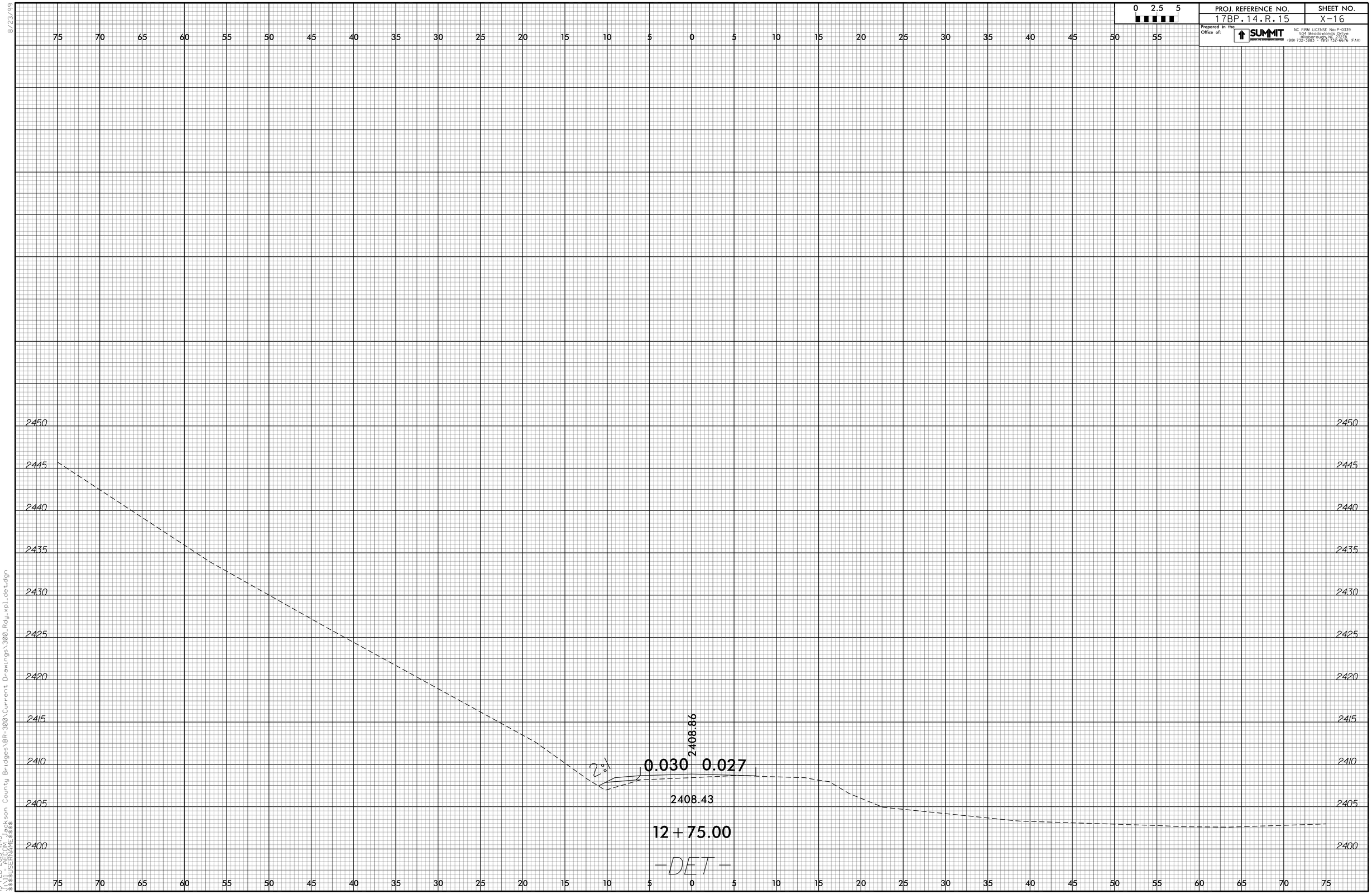

8/23/99
15-FEB-2013 11:43
J:\11 - AECOM Jackson County Bridges\BR-300\Current Drawings\300_Rdy_xpl_det.dgn
$$$$USERNAME$$$$

PROJ. REFERENCE NO.	SHEET NO.
17BP.14.R.15	X-17

Prepared in the Office of: SUMMIT DESIGN AND ENGINEERING SERVICES
NC FIRM LICENSE No: P-0339
504 Meadowlands Drive
Hillsborough, NC 27278
(919) 732-3883 - (919) 732-6676 (FAX)

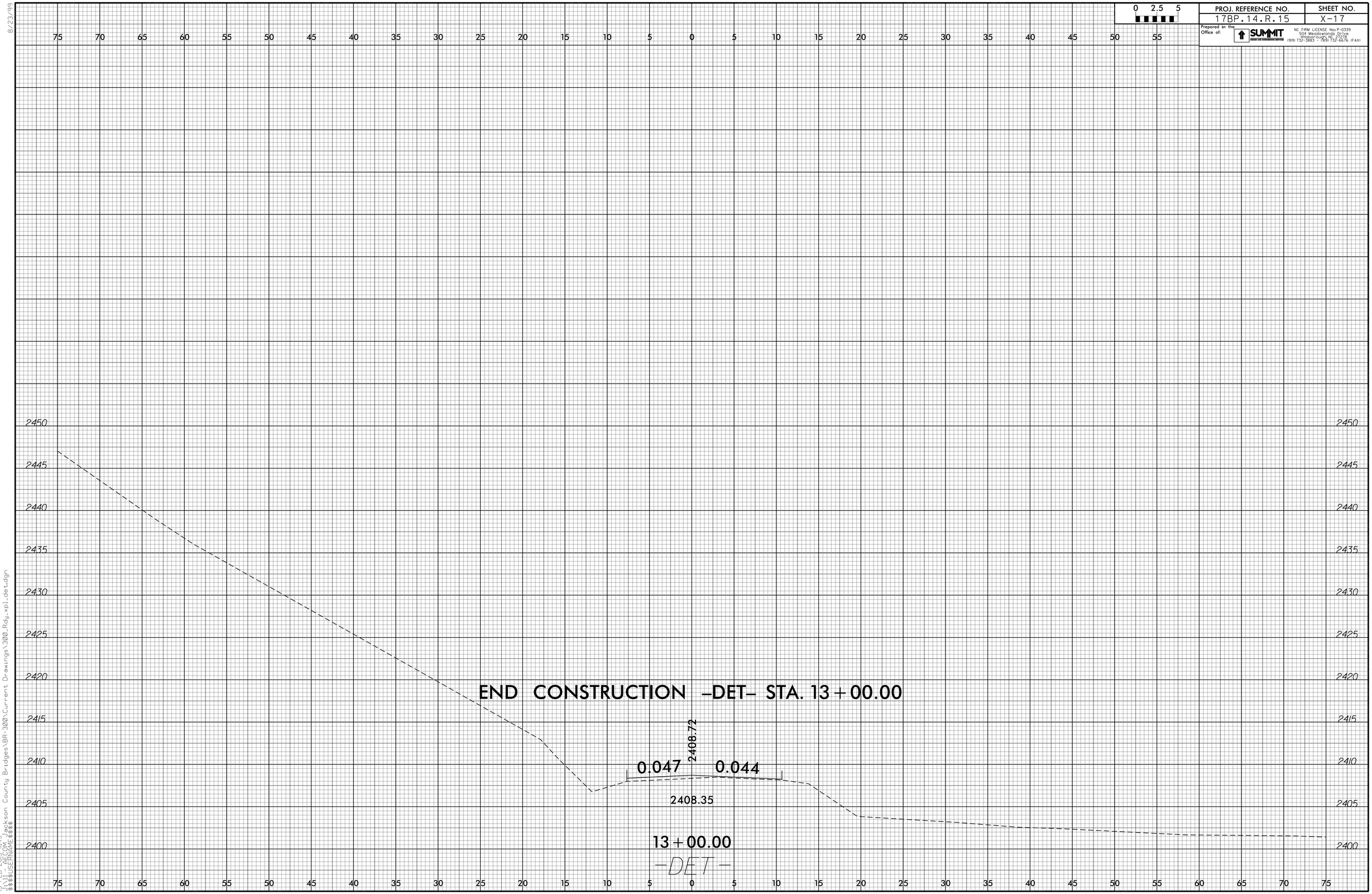

8/23/99
15-FEB-2013 11:45
J:\11 - AECOM Jackson County Bridges\BR-300\Current Drawings\300_Rdy_xpl_det.dgn
$$$$USERNAME$$$$

STATE	STATE PROJECT REFERENCE NO.	SHEET NO.	TOTAL SHEETS
N.C.	17BP.14.R.15	TS-01	

STATE PROJ. NO.	F.A. PROJ. NO.	DESCRIPTION
17BP.14.R.15		PE, R/W

STATE OF NORTH CAROLINA
DIVISION OF HIGHWAYS

JACKSON COUNTY

LOCATION: BRIDGE NO. 300 ON SR 1371 (BRUSHY FORK RD) OVER BRUSHY FORK CREEK.

TYPE OF WORK: GRADING, DRAINAGE, PAVING AND STRUCTURE.

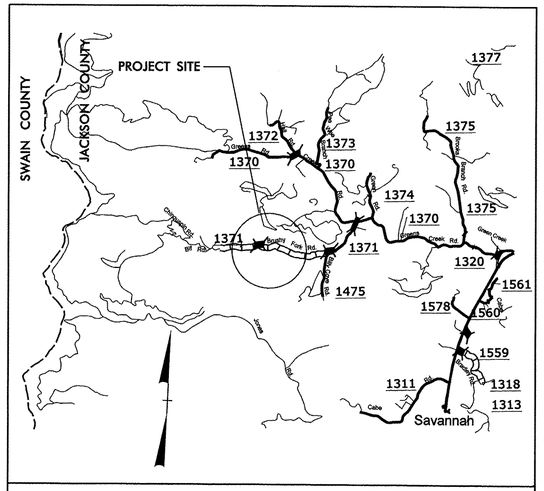

VICINITY MAP

STRUCTURE

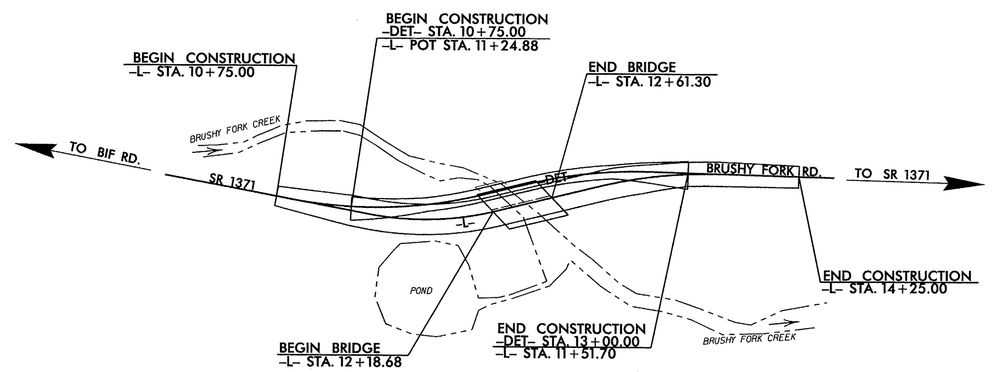

NAD 83/
NSRS 2007

TIP PROJECT: 17BP.14.R.15

CONTRACT:

DESIGN DATA

ADT XXXX = 270 VPD
V = 35 MPH
FUNC CLASS = LOCAL
SUB-REGIONAL TIER

PROJECT LENGTH

LENGTH ROADWAY STATE PROJECT 17BP.14.R.15	= 0.058 MILES
LENGTH STRUCTURES STATE PROJECT 17BP.14.R.15	= 0.007 MILES
TOTAL LENGTH STATE PROJECT 17BP.14.R.15	= 0.066 MILES

NCDOT CONTACT: JOSHUA DEYTON, PE
PROJECT ENGINEER

Prepared In the Office of:

AECOM
NC FIRM LICENSE No: F-0342
701 Corporate Center Drive, Suite 475
Raleigh, NC 27607
(919) 854-6200 - (919) 854-6259(FAX)

2012 STANDARD SPECIFICATIONS

RIGHT OF WAY DATE:
JULY 25, 2012

LETTING DATE:
FY 2013

TRACY N. PARROTT, PE
PROJECT ENGINEER

BRANDON W. JOHNSON, PE
PROJECT DESIGN ENGINEER

BRIDGE ENGINEER

NORTH CAROLINA PROFESSIONAL SEAL 030474 ENGINEER JOHN C. MORRISON

SIGNATURE: John C. Morrison *P.E.*

STATE OF NORTH CAROLINA DEPARTMENT OF TRANSPORTATION

11:39:59 AM
01/30/2013
BELISLEM

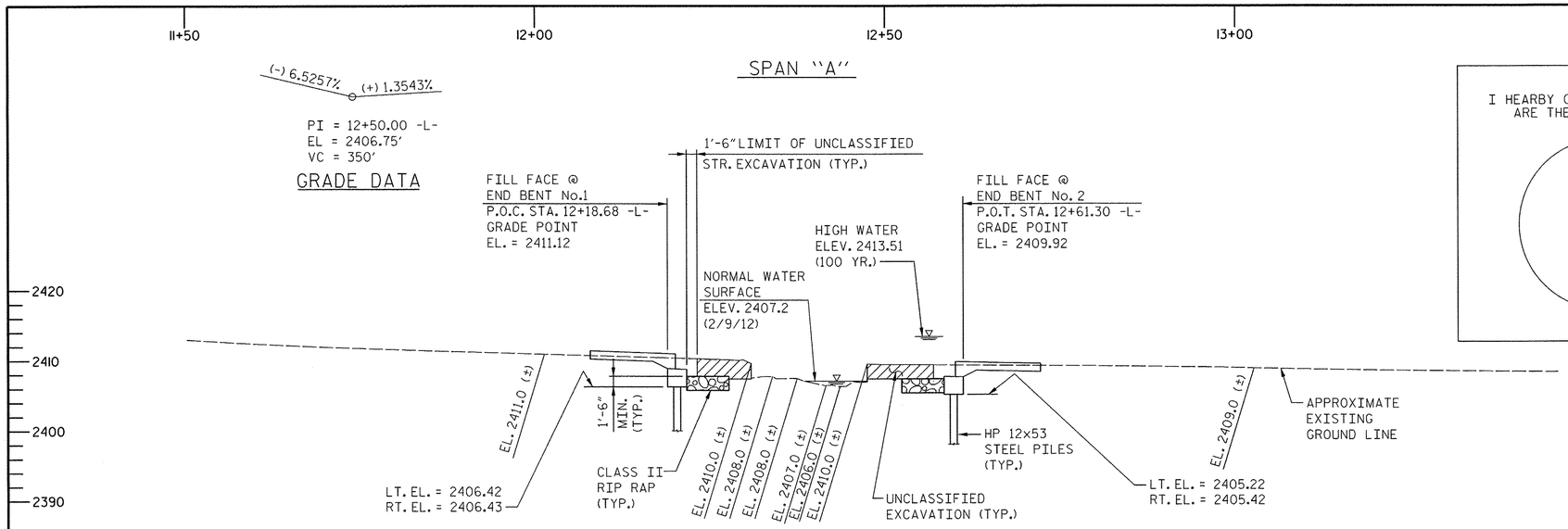

SECTION ALONG ℄ -L-

(SECTIONS AT END BENTS ARE AT RIGHT ANGLES)

I HEARBY CERTIFY THESE PLANS ARE THE AS-BUILT PLANS

HORIZONTAL CURVE DATA -L-

PI STA. 11+80.14
Δ = 24°24'47.5" (LT)
D = 28°38'52.4"
L = 85.22'
T = 43.27'
R = 200.00'

HYDRAULIC DATA

DESIGN DISCHARGE	180 CFS
FREQUENCY OF DESIGN FLOOD	2 YR.
DESIGN HIGH WATER ELEVATION	2411.00
DRAINAGE AREA	1.86 SQ. MI.
BASE DISCHARGE (Q 100)	900 CFS
BASE HIGH WATER ELEVATION	2413.51

OVERTOPPING FLOOD DATA

OVERTOPPING DISCHARGE	198 CFS
FREQUENCY OF OVERTOPPING FLOOD	2+ YR.
OVERTOPPING FLOOD ELEVATION	2411.80

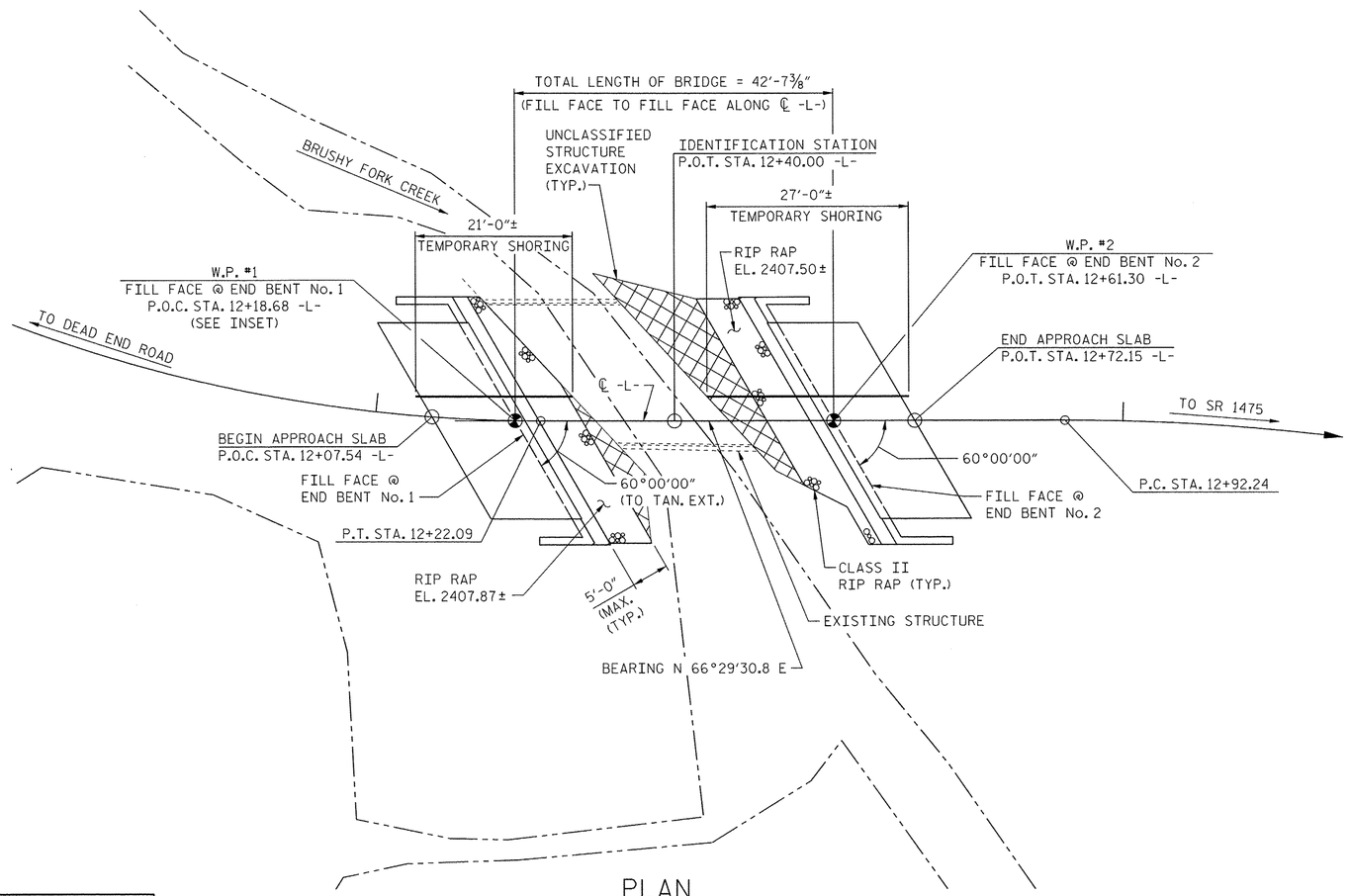

PLAN

(PILES NOT SHOWN FOR CLARITY)

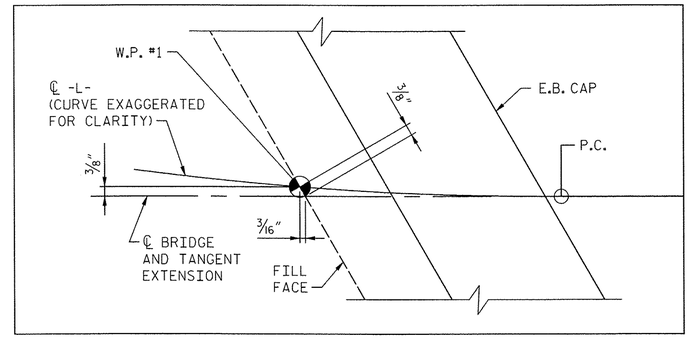

INSET SHOWING W.P. #1

PROJECT NO. 17BP.14.R.15

JACKSON **COUNTY**

STATION: 12+40.00 -L-

SHEET 1 OF 2 REPLACES BRIDGE NO. 300

AECOM
AECOM TECHNICAL SERVICES, INC.
701 CORPORATE CENTER DRIVE, SUITE 475
RALEIGH, NC 27607
(919) 854-6200 www.aecom.com
AECOM License No. F-0342

NORTH CAROLINA PROFESSIONAL SEAL 030474 ENGINEER JOHN C. MORRIGAN
2/14/13

STATE OF NORTH CAROLINA
DEPARTMENT OF TRANSPORTATION
RALEIGH

GENERAL DRAWING
FOR BRIDGE ON SR 1371
OVER BRUSHY FORK CREEK
BETWEEN SR 1475 & DEAD END ROAD

24'-10" CLEAR ROADWAY - 60° SKEW

REVISIONS						SHEET NO.
NO.	BY:	DATE:	NO.	BY:	DATE:	S-01
						TOTAL SHEETS

DRAWN BY : MTB DATE : 08/12
CHECKED BY : JCM DATE : 08/12

DATE: 2/13/2013
TIME: 11:44:18 AM

USER: BEUSLEM
DGN: G:\50238172\400_Tech_Info_Disc_Files\450_NCDOT Std Details\Bridge Files\BRG_300_EE\Structures\0300_PlanElev.dgn

BENCH MARK: BM#1 - 8" SPIKE SET IN ROOT OF 15" POPLAR TREE
-L- STA. 10+26.96, 48.85' LT.
(-BL- STA. 5+04.00, 56' LT.)
ELEV. 2423.24', NAVD 1988

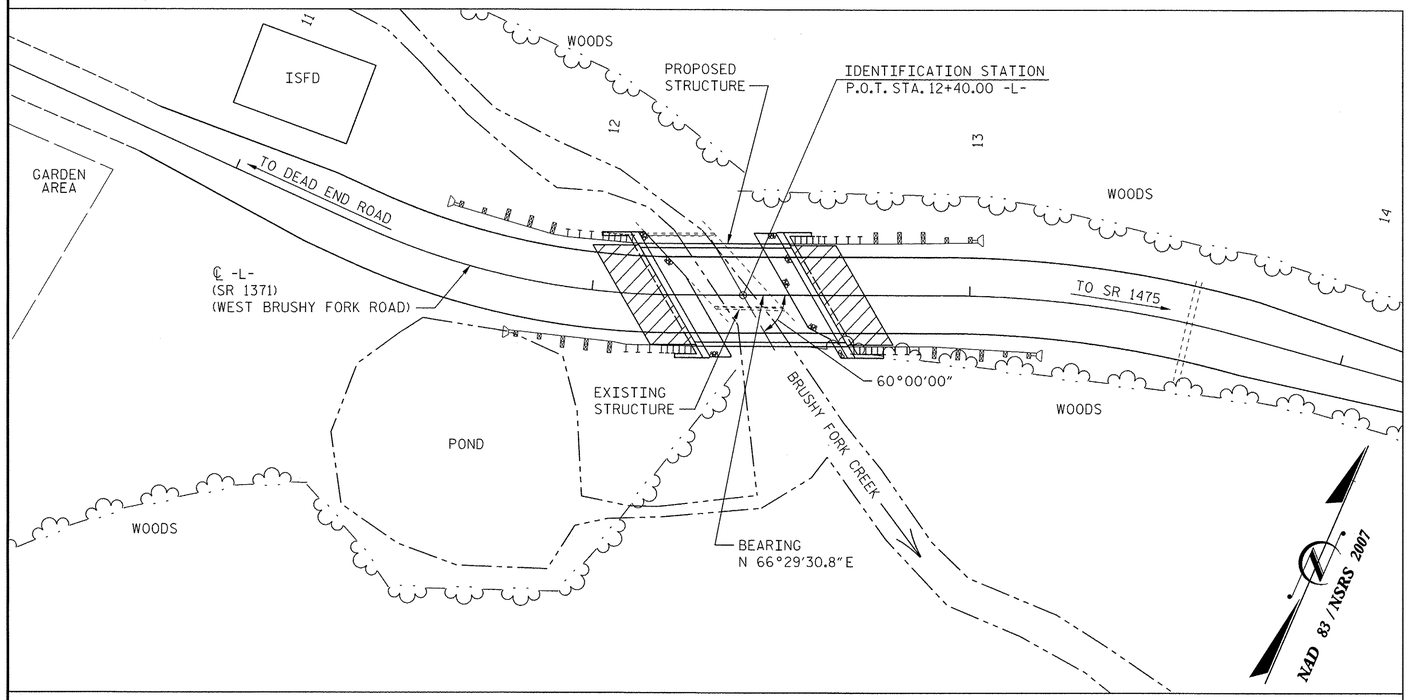

LOCATION SKETCH

NOTES:

ASSUMED LIVE LOAD = HL-93 OR ALTERNATE LOADING.

FOR EROSION CONTROL MEASURES, SEE EROSION CONTROL PLANS.

THIS BRIDGE HAS BEEN DESIGNED IN ACCORDANCE WITH THE AASHTO LRFD BRIDGE DESIGN SPECIFICATIONS FOR SEISMIC PERFORMANCE ZONE 1.

AFTER SERVING AS TEMPORARY STRUCTURE, THE EXISTING STRUCTURE CONSISTING OF 1 @ 18'-6" SPAN, 18.8'± CLEAR ROADWAY WIDTH, TIMBER FLOOR ON TIMBER JOIST WITH TIMBER CAPS AND POSTS AND LOCATED AT EXISTING CROSSING FOR PROPOSED STRUCTURE, SHALL BE REMOVED. THE EXISTING BRIDGE IS PRESENTLY POSTED BELOW THE LEGAL LOAD LIMIT. SHOULD THE STRUCTURAL INTEGRITY OF THE BRIDGE FURTHER DETERIORATE, THIS LOAD LIMITATION MAY BE REDUCED AS FOUND NECESSARY DURING THE LIFE OF THE PROJECT.

REMOVAL OF THE EXISTING BRIDGE SHALL BE PERFORMED AS NOT TO ALLOW DEBRIS TO FALL INTO THE WATER. THE CONTRACTOR SHALL REMOVE THE BRIDGE AND SUBMIT PLANS FOR DEMOLITION IN ACCORDANCE WITH ARTICLE 401-2 OF THE STANDARD SPECIFICATIONS.

THE MATERIAL SHOWN IN THE CROSS-HATCHED AREA SHALL BE EXCAVATED FOR A DISTANCE OF 17.2 FT± EACH SIDE OF CENTERLINE ROADWAY AS DIRECTED BY THE ENGINEER. THIS WORK WILL BE PAID FOR AT THE CONTRACT LUMP SUM PRICE FOR UNCLASSIFIED STRUCTURE EXCAVATION. SEE SECTION 412 OF THE STANDARD SPECIFICATIONS.

THE SUBSTRUCTURE OF THE EXISTING BRIDGE INDICATED ON THE PLANS IS FROM THE BEST INFORMATION AVAILABLE. SINCE THIS INFORMATION IS SHOWN FOR THE CONVENIENCE OF THE CONTRACTOR, THE CONTRACTOR SHALL HAVE NO CLAIM WHATSOEVER AGAINST THE DEPARTMENT OF TRANSPORTATION FOR ANY DELAYS OR ADDITIONAL COSTS INCURRED BASED ON DIFFERENCES BETWEEN THE EXISTING BRIDGE SUBSTRUCTURE SHOWN ON THE PLANS AND THE ACTUAL CONDITIONS AT THE PROJECT SITE.

STEEL SHEET PILING REQUIRED FOR SHORING SHALL BE HOT ROLLED.

FOR LIMITS OF TEMPORARY SHORING FOR MAINTENANCE OF TRAFFIC, SEE TRAFFIC CONTROL PLANS. FOR PAY ITEM FOR TEMPORARY SHORING FOR MAINTENANCE OF TRAFFIC, SEE ROADWAY PLANS.

NO KNOWN UTILITY CONFLICTS.

FOR PILES, SEE SECTION 450 OF THE STANDARD SPECIFICATIONS.

PILES AT END BENT NO. 1 AND END BENT NO. 2 ARE DESIGNED FOR A FACTORED RESISTANCE OF 70 TONS PER PILE.

DRIVE PILES AT END BENT NO. 1 AND END BENT NO. 2 TO A REQUIRED DRIVING RESISTANCE OF 120 TONS PER PILE.

STEEL H-PILE POINTS ARE REQUIRED FOR ALL STEEL H-PILES AT END BENT NO. 1 AND END BENT NO. 2. FOR STEEL PILE POINTS, SEE SECTION 450 OF THE STANDARD SPECIFICATIONS.

TESTING PILES WITH THE PDA DURING DRIVING, RESTRIKING OR REDRIVING MAY BE REQUIRED. THE ENGINEER WILL DETERMINE THE NEED FOR PDA TESTING. FOR PDA TESTING, SEE SECTION 450 OF THE STANDARD SPECIFICATIONS.

IT HAS BEEN ESTIMATED THAT A HAMMER WITH AN EQUIVALENT RATED ENERGY IN THE RANGE OF 40 TO 45 FT-KIPS PER BLOW WILL BE REQUIRED TO DRIVE PILES AT END BENT NO. 1 AND END BENT NO. 2. THIS ESTIMATED ENERGY RANGE DOES NOT RELEASE THE CONTRACTOR FROM PROVIDING EQUIPMENT IN ACCORDANCE WITH THE PILE PROVISION.

FOR PILE DRIVING CRITERIA, SEE SPECIAL PROVISIONS.

ASPHALT WEARING SURFACE IS INCLUDED IN ROADWAY QUANTITY ON ROADWAY PLANS.

THIS STRUCTURE HAS BEEN DESIGNED IN ACCORDANCE WITH HEC 18, "EVALUATING SCOUR AT BRIDGE", MAY, 2001.

FOR SUBMITTAL OF WORKING DRAWINGS, SEE SPECIAL PROVISIONS.

FOR FALSEWORK AND FORMWORK, SEE SPECIAL PROVISIONS.

FOR CRANE SAFETY, SEE SPECIAL PROVISIONS.

FOR OTHER DESIGN DATA AND GENERAL NOTES, SEE SHEET SN.

TOTAL BILL OF MATERIAL

	REMOVAL OF EXISTING STRUCTURE	PDA TESTING	UNCLASSIFIED STRUCTURE EXCAVATION	CLASS A CONCRETE	BRIDGE APPROACH SLABS	REINFORCING STEEL	3'-0" x 1'-9" PRESTRESSED CONCRETE CORED SLAB UNITS		HP 12x53 STEEL PILES		STEEL PILE POINTS	ONE BAR METAL RAIL	1'-0" x 1'-9¾" CONCRETE PARAPET	RIP RAP CLASS II (2'-0" THICK)	GEOTEXTILE FOR DRAINAGE	ELASTOMERIC BEARINGS
	LUMP SUM	EACH	LUMP SUM	CU. YDS.	LUMP SUM	LBS.	NO.	LIN. FT.	NO.	LIN. FT.	EACH	LIN. FT.	LIN. FT.	TONS	SQ. YD.	LUMP SUM
SUPERSTRUCTURE	LUMP SUM		—	—	LUMP SUM	—	9	360	—	—	—	64.15	80.00	—	—	LUMP SUM
END BENT No. 1	—		LUMP SUM	13.8	—	2079	—	—	5	135	5	—	—	16	18	—
END BENT No. 2	—		LUMP SUM	13.8	—	2079	—	—	5	100	5	—	—	16	18	—
TOTAL	LUMP SUM	1	LUMP SUM	27.6	LUMP SUM	4158	9	360	10	235	10	64.15	80.00	32	36	LUMP SUM

PROJECT NO. 17BP.14.R.15
JACKSON COUNTY
STATION: 12+40.00 -L-

SHEET 2 OF 2 REPLACES BRIDGE NO. 300

AECOM
AECOM TECHNICAL SERVICES, INC.
701 CORPORATE CENTER DRIVE, SUITE 475
RALEIGH, NC 27607
(919) 854-6200
www.aecom.com
AECOM License No. F-0342

NORTH CAROLINA PROFESSIONAL SEAL 030474 ENGINEER JOHN C. MORRISON
2/14/13

STATE OF NORTH CAROLINA
DEPARTMENT OF TRANSPORTATION
RALEIGH

GENERAL DRAWING
FOR BRIDGE ON SR 1371
OVER BRUSHY FORK CREEK
BETWEEN SR 1475 & DEAD END ROAD
24'-10" CLEAR ROADWAY - 60° SKEW

REVISIONS						SHEET NO.
NO.	BY:	DATE:	NO.	BY:	DATE:	S-02
						TOTAL SHEETS

DRAWN BY : MTB DATE : 08/12
CHECKED BY : JCM DATE : 08/12

DATE: 2/13/2013
TIME: 11:46:51 AM
USER: BELUSLEM
DGN: G:\60253872\2400_Tech_Info_Disc_Files\450_NCDOT Std Details\Bridge\BR6_300_EE\Structures\B300_LocSketch.dgn

LOAD AND RESISTANCE FACTOR RATING (LRFD) SUMMARY FOR PRESTRESSED CONCRETE GIRDERS

LEVEL		VEHICLE	WEIGHT (W) (TONS)	CONTROLLING LOAD RATING	MINIMUM RATING FACTORS (RF)	TONS = W X RF	STRENGTH I LIMIT STATE											SERVICE III LIMIT STATE						COMMENT NUMBER
								MOMENT					SHEAR						MOMENT					
							LIVELOAD FACTORS	DISTRIBUTION FACTORS (DF)	RATING FACTOR	SPAN	GIRDER LOCATION	DISTANCE FROM LEFT END OF SPAN (ft)	DISTRIBUTION FACTORS (DF)	RATING FACTOR	SPAN	GIRDER LOCATION	DISTANCE FROM LEFT END OF SPAN (ft)	LIVELOAD FACTORS	DISTRIBUTION FACTORS (DF)	RATING FACTOR	SPAN	GIRDER LOCATION	DISTANCE FROM LEFT END OF SPAN (ft)	
DESIGN LOAD RATING		HL-93(Inv)	N/A	1	1.352	--	1.75	0.252	1.95	40'	EL	19.423	0.653	**1.35**	40'	EL	**7.769**	0.80	0.252	1.72	40'	EL	19.423	
		HL-93(Opr)	N/A	--	1.753	--	1.35	0.252	2.52	40'	EL	19.423	0.653	1.75	40'	EL	7.769	N/A	--	--	--	--	--	
		HS-20(Inv)	36.000	2	1.544	55.583	1.75	0.252	2.45	40'	EL	19.423	0.653	**1.54**	40'	EL	**7.769**	0.80	0.252	2.14	40'	EL	19.423	
		HS-20(Opr)	36.000	--	2.001	72.053	1.35	0.252	3.17	40'	EL	19.423	0.653	2	40'	EL	7.769	N/A	--	--	--	--	--	
LEGAL LOAD RATING	SV	SNSH	13.500	--	3.929	53.037	1.4	0.252	5.64	40'	EL	19.423	0.653	3.93	40'	EL	7.769	0.80	0.252	3.99	40'	EL	19.423	
		SNGARBS2	20.000	--	2.985	59.708	1.4	0.252	4.63	40'	EL	15.538	0.653	2.99	40'	EL	7.769	0.80	0.252	3.28	40'	EL	19.423	
		SNAGRIS2	22.000	--	2.852	62.746	1.4	0.252	4.53	40'	EL	15.538	0.653	2.85	40'	EL	7.769	0.80	0.252	3.23	40'	EL	15.538	
		SNCOTTS3	27.250	--	1.98	53.947	1.4	0.252	2.82	40'	EL	19.423	0.653	1.98	40'	EL	7.769	0.80	0.252	1.99	40'	EL	19.423	
		SNAGGRS4	34.925	--	1.782	62.222	1.4	0.252	2.54	40'	EL	19.423	0.653	1.78	40'	EL	7.769	0.80	0.252	1.79	40'	EL	19.423	
		SNS5A	35.550	--	1.746	62.059	1.4	0.252	2.47	40'	EL	19.423	0.653	1.89	40'	EL	7.769	0.80	0.252	1.75	40'	EL	19.423	
		SNS6A	39.950	--	1.662	66.381	1.4	0.252	2.35	40'	EL	19.423	0.653	1.79	40'	EL	7.769	0.80	0.252	1.66	40'	EL	19.423	
		SNS7B	42.000	--	1.585	66.556	1.4	0.252	2.24	40'	EL	19.423	0.653	1.86	40'	EL	7.769	0.80	0.252	1.58	40'	EL	19.423	
	TTST	TNAGRIT3	33.000	--	2.045	67.476	1.4	0.252	2.89	40'	EL	19.423	0.653	2.07	40'	EL	7.769	0.80	0.252	2.04	40'	EL	19.423	
		TNT4A	33.075	--	1.951	64.52	1.4	0.252	2.93	40'	EL	19.423	0.653	1.95	40'	EL	7.769	0.80	0.252	2.07	40'	EL	19.423	
		TNT6A	41.600	--	1.757	73.106	1.4	0.252	2.49	40'	EL	19.423	0.653	1.91	40'	EL	7.769	0.80	0.252	1.76	40'	EL	19.423	
		TNT7A	42.000	--	1.795	75.386	1.4	0.252	2.55	40'	EL	19.423	0.653	1.79	40'	EL	7.769	0.80	0.252	1.80	40'	EL	19.423	
		TNT7B	42.000	--	1.729	72.638	1.4	0.252	2.61	40'	EL	19.423	0.653	1.73	40'	EL	7.769	0.80	0.252	1.84	40'	EL	19.423	
		TNAGRIT4	43.000	--	1.661	71.441	1.4	0.252	2.53	40'	EL	15.538	0.653	1.66	40'	EL	7.769	0.80	0.252	1.79	40'	EL	19.423	
		TNAGT5A	45.000	--	1.659	74.644	1.4	0.252	2.35	40'	EL	19.423	0.653	1.77	40'	EL	7.769	0.80	0.252	1.66	40'	EL	19.423	
		TNAGT5B	45.000	3	1.568	70.561	1.4	0.252	2.28	40'	EL	19.423	0.653	**1.57**	40'	EL	**7.769**	0.80	0.252	1.61	40'	EL	19.423	

LOAD FACTORS:

DESIGN LOAD RATING FACTORS	LIMIT STATE	γ_{DC}	γ_{DW}
	STRENGTH I	1.25	1.50
	SERVICE III	1.00	1.00

NOTES:

MINIMUM RATING FACTORS ARE BASED ON THE STRENGTH I AND SERVICE III LIMIT STATES.

ALLOWABLE STRESSES FOR SERVICE III LIMIT STATE ARE AS REQUIRED FOR DESIGN.

(#) CONTROLLING LOAD RATING

(1) DESIGN LOAD RATING (HL-93)

(2) DESIGN LOAD RATING (HS-20)

(3) LEGAL LOAD RATING **

** SEE CHART FOR VEHICLE TYPE

GIRDER LOCATION

I - INTERIOR GIRDER
EL - EXTERIOR LEFT GIRDER
ER - EXTERIOR RIGHT GIRDER

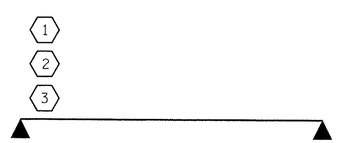

LRFR SUMMARY

FOR SPAN 'A'

PROJECT NO. 17BP.14.R.15

JACKSON COUNTY

STATION: 12+40.00 -L-

AECOM

AECOM TECHNICAL SERVICES, INC.
701 CORPORATE CENTER DRIVE, SUITE 475
RALEIGH, NC 27607
(919) 854-6200 www.aecom.com
AECOM License No. F-0342

NORTH CAROLINA PROFESSIONAL SEAL 030474 ENGINEER JOHN C. MORRISON

2/14/13

STATE OF NORTH CAROLINA
DEPARTMENT OF TRANSPORTATION
RALEIGH

STANDARD
LRFR SUMMARY FOR
40' CORED SLAB UNIT
60° SKEW & 120° SKEW
(NON-INTERSTATE TRAFFIC)

REVISIONS						SHEET NO.
NO.	BY:	DATE:	NO.	BY:	DATE:	S-03
1			3			TOTAL SHEETS
2			4			

STD. NO. 21LRFR1_60&120S_40L

ASSEMBLED BY :	MTB	DATE :	08/12
CHECKED BY :	JCM	DATE :	08/12
DRAWN BY : CVC	6/10		
CHECKED BY : DNS	6/10		

DATE: 2/13/2013
TIME: 11:50:04 AM
USER: BELUSCHI
DGN: D:\SCS\2012\400_Tech_Info_Disc_Files\450_NCDOT Std Tech Dev Files\BRG_300_EE Structures\B300_lrfr_2los_cssp.dgn

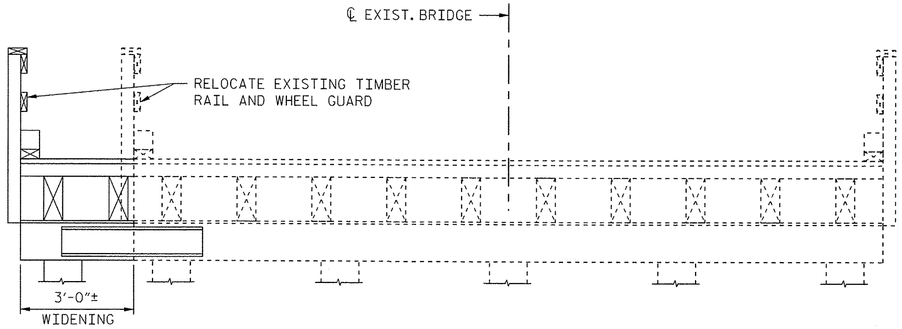

STAGE Ø
(BY OTHERS)

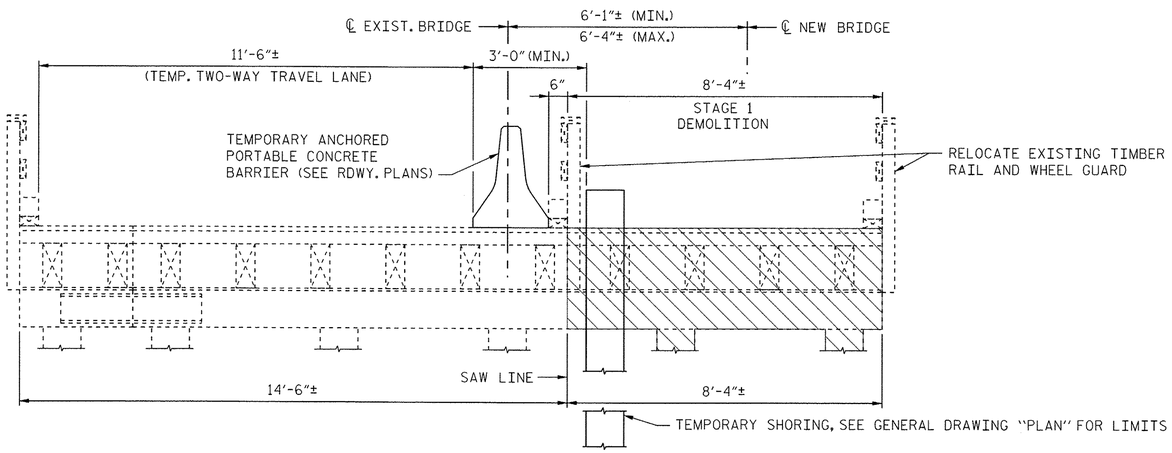

STAGE 1

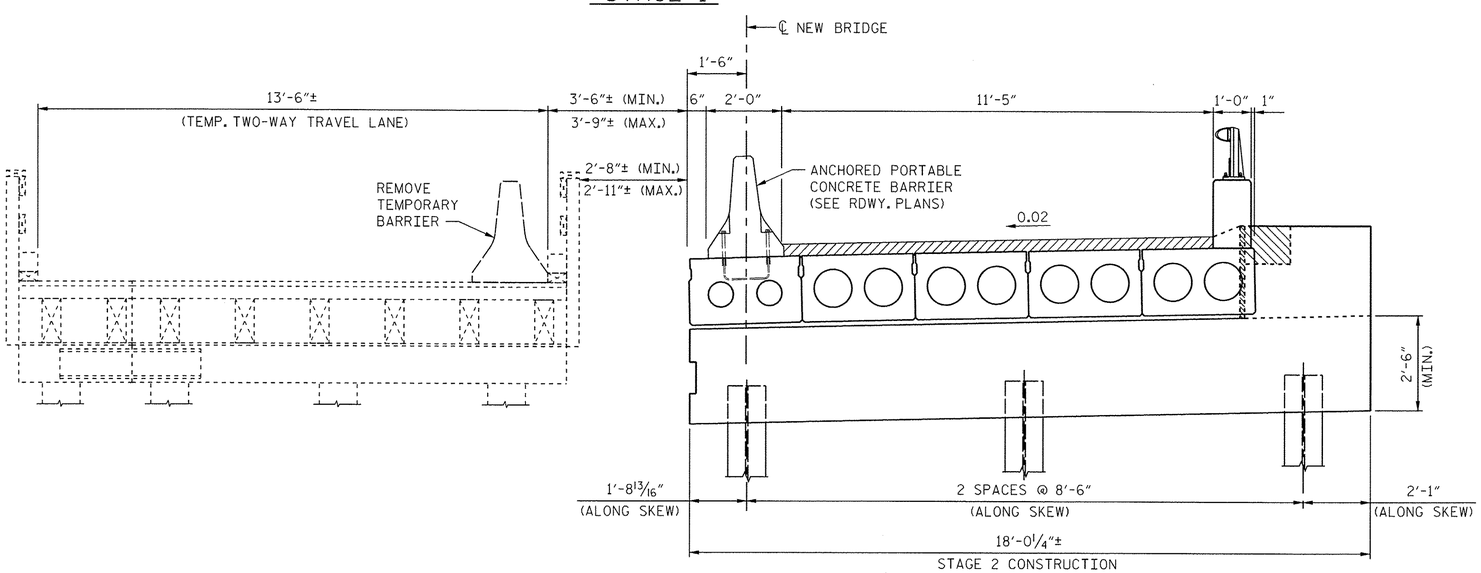

STAGE 2

NOTES:

IN STAGE Ø THE EXISTING BRIDGE TEMPORARY WIDENING IS TO BE CONSTRUCTED BY OTHERS BEFORE BRIDGE REPLACEMENT CONSTRUCTION BEGINS.

FOR STAGE 1, USE SHORT-TERM 11'-6"± TEMPORARY LANE REDUCTION WITH PORTABLE BARRIER TO CUT AND REMOVE DECK AND RELOCATE EXISTING RAILING AND WHEEL GUARD.

IF EXISTING PILE OR POST PLACEMENT CONFLICTS WITH SAW LINE, REMOVE DECK, BEAMS AND BEARING STRIP, BUT LEAVE POST AND CAPS IN PLACE UNTIL STAGE 3.

DIMENSIONS ARE NORMAL TO ℄ BRIDGE UNLESS OTHERWISE NOTED.

THE COST OF RELOCATING THE EXISTING TIMBER RAILS AND THE REPLACEMENT OF ANY DAMAGED OR DEFECTIVE TIMBERS AND HARDWARE IN THE RAILING SYSTEM SHALL BE INCLUDED IN THE COST FOR REMOVAL OF THE EXISTING STRUCTURE.

PROJECT NO. 17BP.14.R.15
JACKSON COUNTY
STATION: 12+40.00 -L-

SHEET 1 OF 2

AECOM
AECOM TECHNICAL SERVICES, INC.
701 CORPORATE CENTER DRIVE, SUITE 475
RALEIGH, NC 27607
(919) 854-6200 www.aecom.com
AECOM License No. F-0342

NORTH CAROLINA PROFESSIONAL SEAL 030474 ENGINEER JOHN C. MORRISON
2/14/13

STATE OF NORTH CAROLINA
DEPARTMENT OF TRANSPORTATION
RALEIGH

BRIDGE CONSTRUCTION
STAGING FOR MAINTENANCE
OF TRAFFIC

REVISIONS						SHEET NO.
NO.	BY:	DATE:	NO.	BY:	DATE:	S-04
						TOTAL SHEETS

DRAWN BY : MTB DATE : 08/12
CHECKED BY : JCM DATE : 08/12

USER: REUSISLH
DGN: G:\SRS\BRT\2\400_Tech_Info_Disc_Files\450_NCDOT Staff well Disc Files\BRG_300_EE Structures\B300L_PlaceSeal.dgn
DATE: 2/13/2013
TIME: 11:03:57 AM

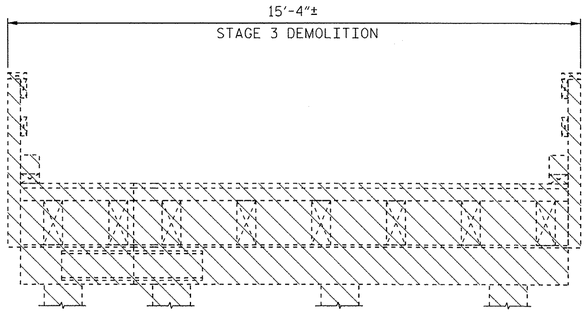

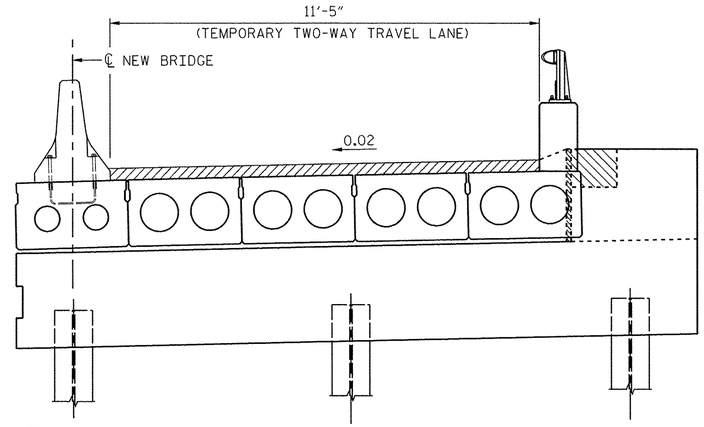

STAGE 3

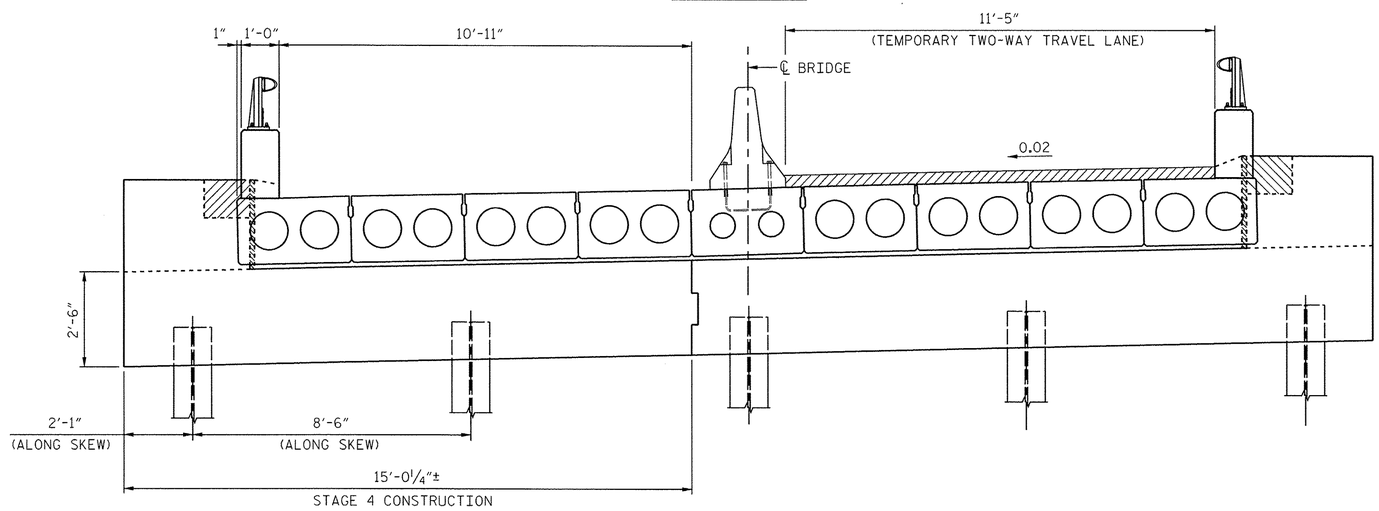

STAGE 4

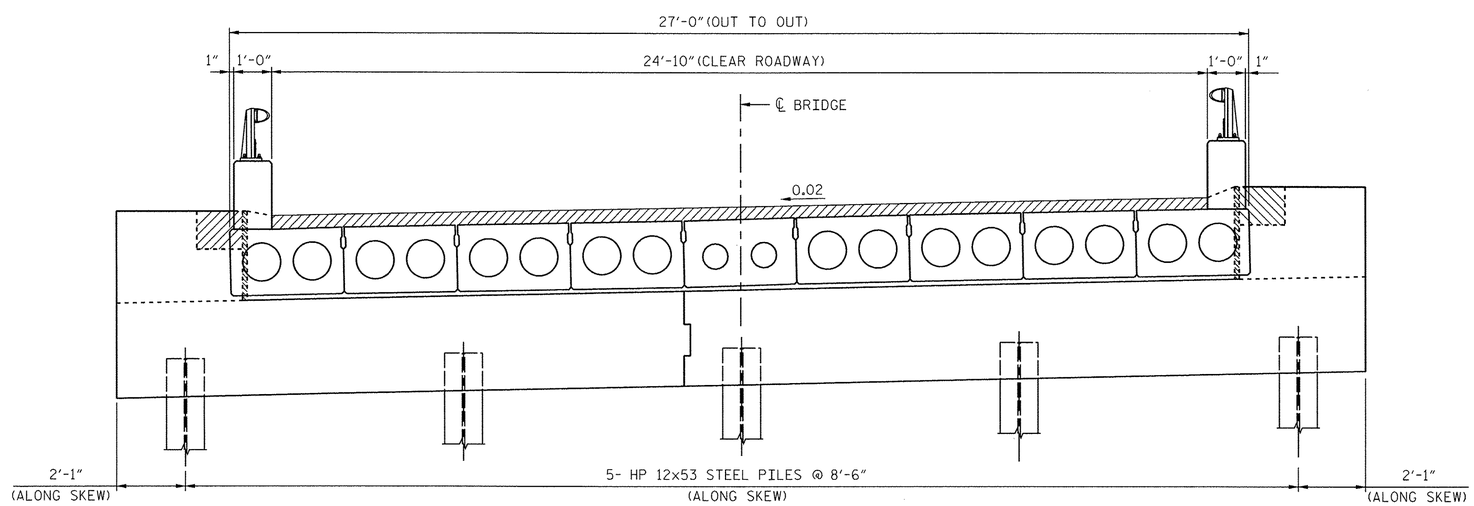

STAGE 5

DRAWN BY :	MTB	DATE :	08/12
CHECKED BY :	JCM	DATE :	08/12

PROJECT NO. 17BP.14.R.15

JACKSON **COUNTY**

STATION: 12+40.00 -L-

SHEET 2 OF 2

AECOM
AECOM TECHNICAL SERVICES, INC.
701 CORPORATE CENTER DRIVE, SUITE 475
RALEIGH, NC 27607
(919) 854-6200 www.aecom.com
AECOM License No. F-0342

NORTH CAROLINA PROFESSIONAL SEAL 030474 ENGINEER JOHN C. MORRISON
2/14/13

STATE OF NORTH CAROLINA
DEPARTMENT OF TRANSPORTATION
RALEIGH

BRIDGE CONSTRUCTION
STAGING FOR MAINTENANCE
OF TRAFFIC

REVISIONS						SHEET NO.
NO.	BY:	DATE:	NO.	BY:	DATE:	S-05
						TOTAL SHEETS

DATE: 2/13/2013
TIME: 11:53:51 AM
USER: BELISLEM
DGN: Q:\60123877.2\400_Tech_Info_Dsn_Files\450_NCDOT Std Tech Dsn Files\BRG_300_LES\Structure\B300_Phase2Set2.dgn

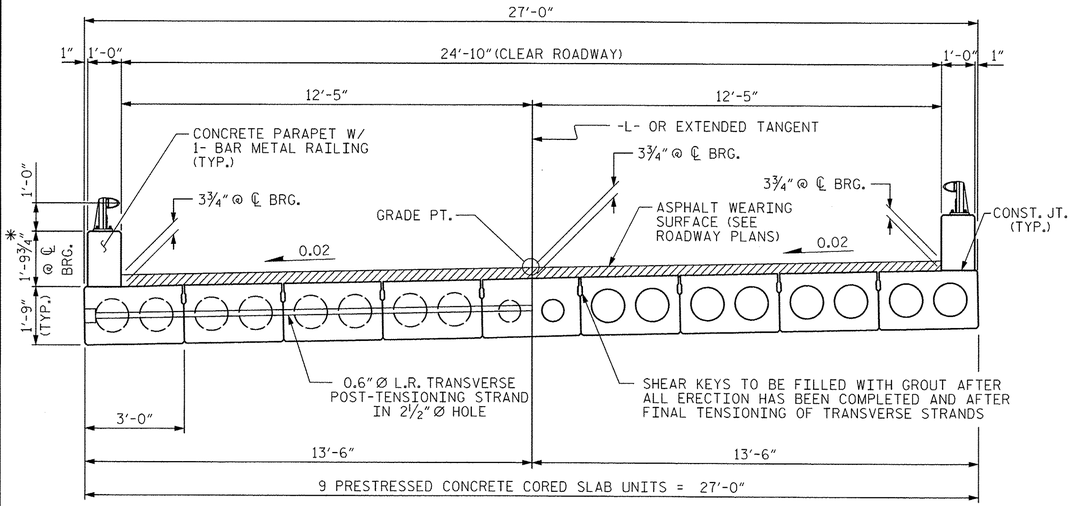

HALF SECTION
AT INTERMEDIATE DIAPHRAGMS

HALF SECTION
THROUGH VOIDS

TYPICAL SECTION

*-THE MAXIMUM CONCRETE PARAPET HEIGHT AND ASPHALT THICKNESS IS SHOWN. THE HEIGHT OF THE CONCRETE PARAPET AND ASPHALT THICKNESS VARIES WHILE THE TOP OF THE CONCRETE PARAPET FOLLOWS THE PROFILE OF THE GUTTERLINE. FOR RAIL HEIGHT DETAILS AND ASPHALT THICKNESS SEE THE "CONCRETE PARAPET SECTION" DETAIL.

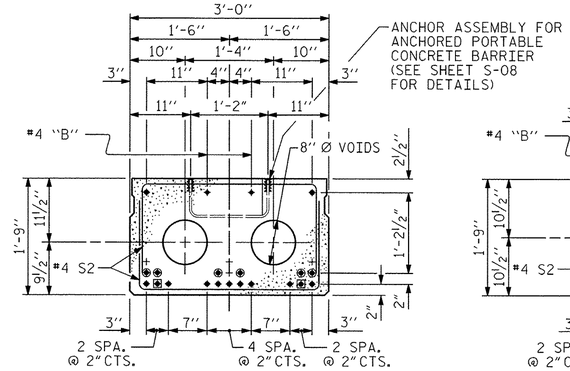

INTERIOR SLAB SECTION

(13 STRANDS REQUIRED)

(CORED SLAB UNIT #5 ONLY)

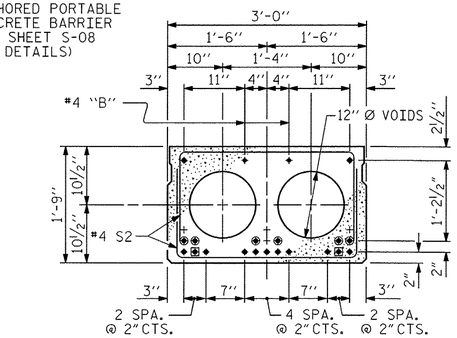

INTERIOR SLAB SECTION

(13 STRANDS REQUIRED)

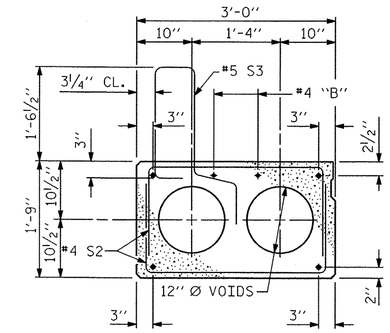

EXT. SLAB SECTION

(FOR PRESTRESSED STRAND LAYOUT, SEE INTERIOR SLAB SECTION.)

0.6" Ø LOW RELAXATION STRAND LAYOUT

~~BOND SHALL BE BROKEN ON THESE STRANDS FOR A DISTANCE OF 6'-0" FROM END OF CORED SLAB UNIT. SEE STANDARD SPECIFICATIONS, ARTICLE 1078-7.~~

BOND SHALL BE BROKEN ON THESE STRANDS FOR A DISTANCE OF 2'-0" FROM END OF CORED SLAB UNIT. SEE STANDARD SPECIFICATIONS, ARTICLE 1078-7.

OPTIONAL FULL LENGTH DEBONDED STRANDS. THESE STRANDS ARE NOT REQUIRED. IF THE FABRICATOR CHOOSES TO INCLUDE THESE STRANDS IN THE CORED SLAB UNIT, THE STRANDS SHALL BE DEBONDED FOR THE FULL LENGTH OF THE UNIT AT NO ADDITIONAL COST. SEE STANDARD SPECIFICATIONS, ARTICLE 1078-7.

DEBONDING LEGEND

FIXED END

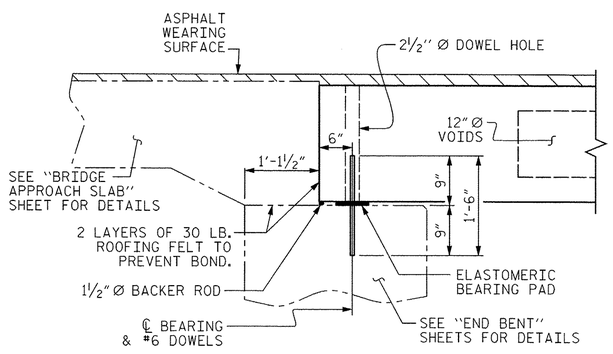

SECTION AT END BENT

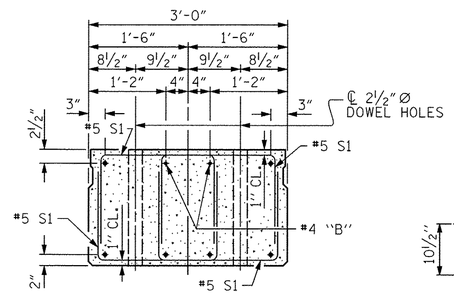

END ELEVATION

SHOWING PLACEMENT OF DOUBLE STIRRUPS AND LOCATION OF DOWEL HOLES. (STRAND LAYOUT NOT SHOWN.) INTERIOR SLAB UNIT SHOWN-EXTERIOR SLAB UNIT SIMILAR EXCEPT SHEAR KEY LOCATION.

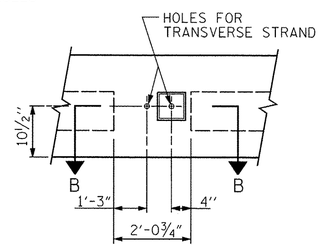

ELEVATION VIEW

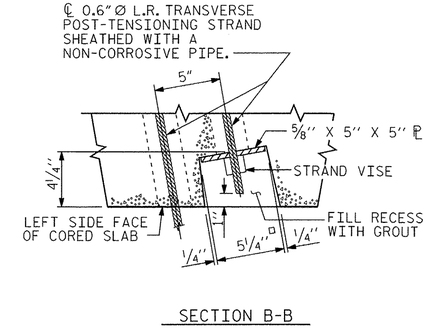

SECTION B-B

CORED SLAB UNIT #5

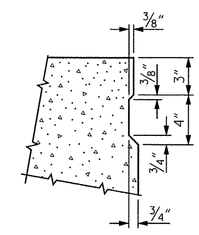

SHEAR KEY DETAIL

NOTE: OMIT SHEAR KEY ON OUTSIDE FACE OF EXTERIOR CORED SLABS.

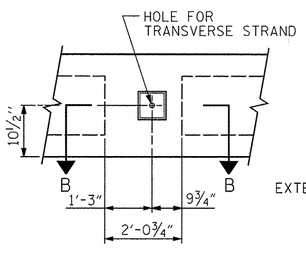

ELEVATION VIEW

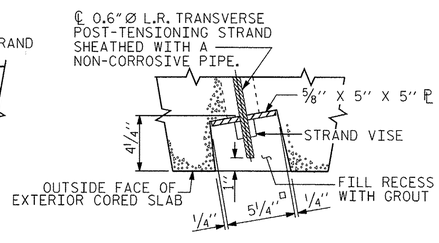

SECTION B-B

CORED SLAB UNIT #1

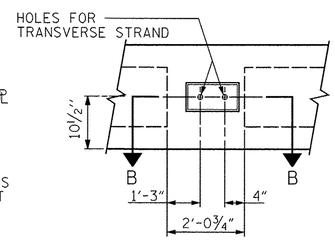

ELEVATION VIEW

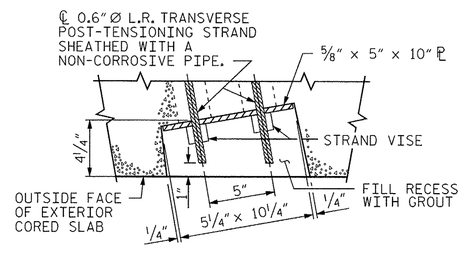

SECTION B-B

CORED SLAB UNIT #9

GROUTED RECESS AT END OF POST-TENSIONED STRAND OF CORED SLABS

PROJECT NO. 17BP.14.R.15

JACKSON COUNTY

STATION: 12+40.00 -L-

SHEET 1 OF 4

AECOM
AECOM TECHNICAL SERVICES, INC.
701 CORPORATE CENTER DRIVE, SUITE 475
RALEIGH, NC 27607
(919) 854-6200 www.aecom.com
AECOM License No. F-0342

NORTH CAROLINA PROFESSIONAL SEAL 030474 ENGINEER JOHN C. MORRISON
2/14/13

STATE OF NORTH CAROLINA
DEPARTMENT OF TRANSPORTATION
RALEIGH

3'-0" X 1'-9"
PRESTRESSED CONCRETE
CORED SLAB UNIT
60° SKEW

REVISIONS						SHEET NO.
NO.	BY:	DATE:	NO.	BY:	DATE:	S-06
						TOTAL SHEETS

DRAWN BY : MTB DATE : 08/12
CHECKED BY : JCM DATE : 08/12

USER: BEGISEN
DGN: 0108260172-400_Tech_Info_Disc_Files\450_NCDOT Std Tech Data Files\BRG_300_ES\Structures\B300_TypSec4.dgn
DATE: 2/13/2013
TIME: 11:55:39 AM

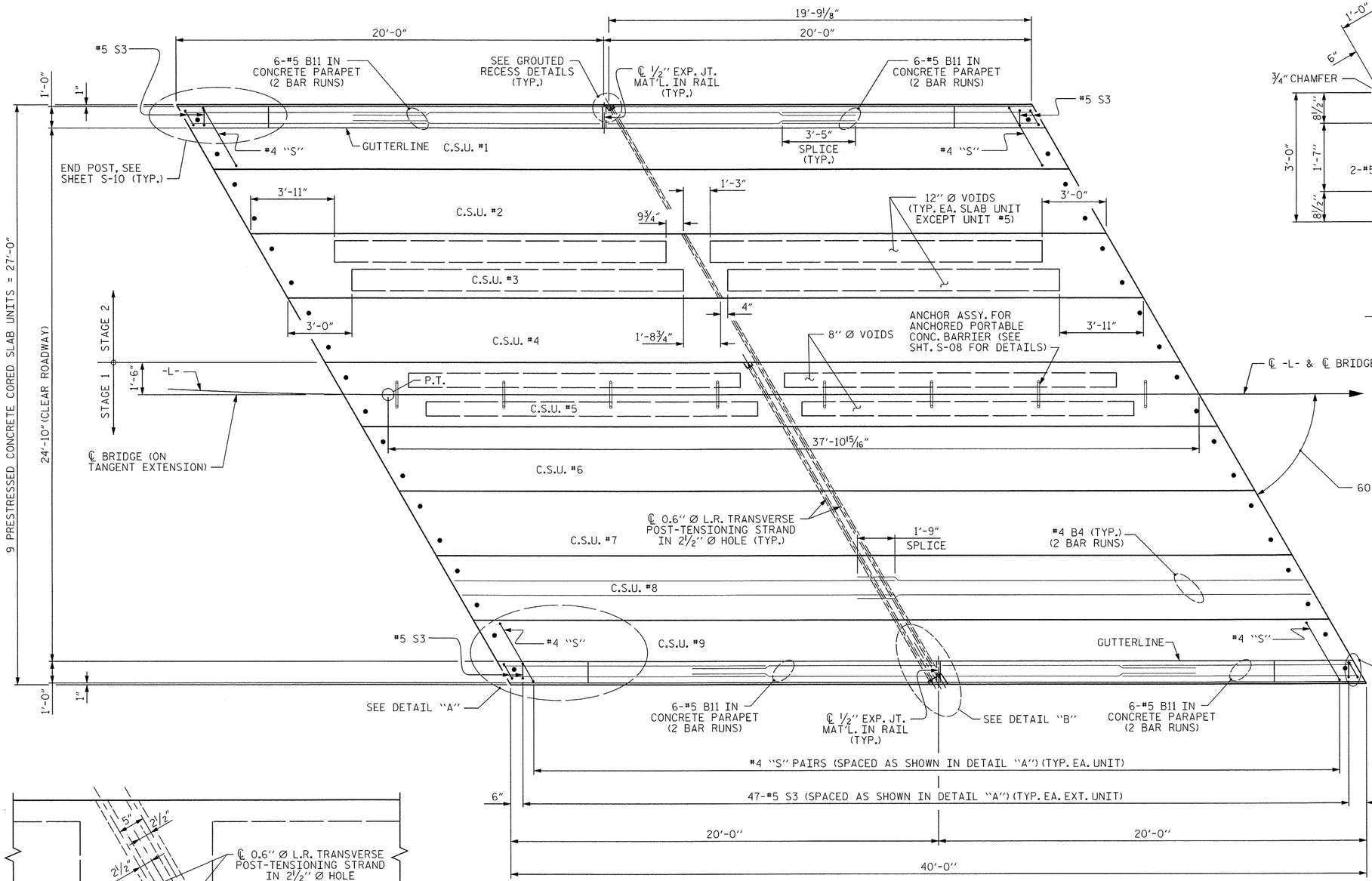

PLAN OF UNIT

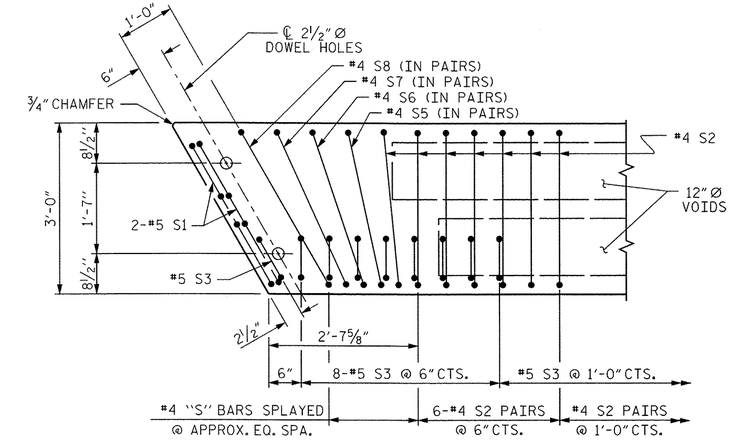

DETAIL "A"

NOTE: EXTERIOR UNIT SHOWN - INTERIOR UNIT SIMILAR EXCEPT OMIT #5 S3 BARS.

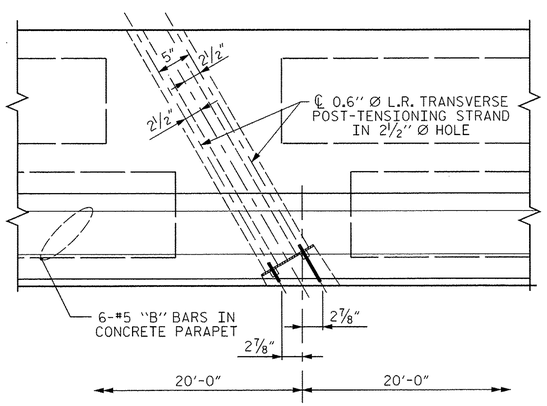

DETAIL "B"

#4 S11 BARS MAY BE SHIFTED AS NECESSARY TO MAINTAIN 1" CLEAR TO GROUTED RECESS AND 2 1/2" Ø TRANSVERSE POST-TENSIONING STRAND HOLES

DRAWN BY :	MTB	DATE :	08/12
CHECKED BY :	JCM	DATE :	08/12

PROJECT NO. 17BP.14.R.15

JACKSON COUNTY

STATION: 12+40.00 -L-

SHEET 2 OF 4

AECOM

AECOM TECHNICAL SERVICES, INC.
701 CORPORATE CENTER DRIVE, SUITE 475
RALEIGH, NC 27607
(919) 854-6200 www.aecom.com
AECOM License No. F-0342

NORTH CAROLINA PROFESSIONAL SEAL 030474 ENGINEER JOHN C. MORRISON

2/14/13

STATE OF NORTH CAROLINA
DEPARTMENT OF TRANSPORTATION
RALEIGH

PLAN OF 40' UNIT
24'-10" CLEAR ROADWAY
60° SKEW

REVISIONS						SHEET NO.
NO.	BY:	DATE:	NO.	BY:	DATE:	S-07
						TOTAL SHEETS

USER: BELUSLEM
DGN: Q:\60023872\400_Tech_Info_Disc_Files\450_NCDOT Staff Test\Deaf Files\BRG_300_EFE Structures\B300_Sp01.dgn
DATE: 2/13/2013
TIME: 11:51:25 AM

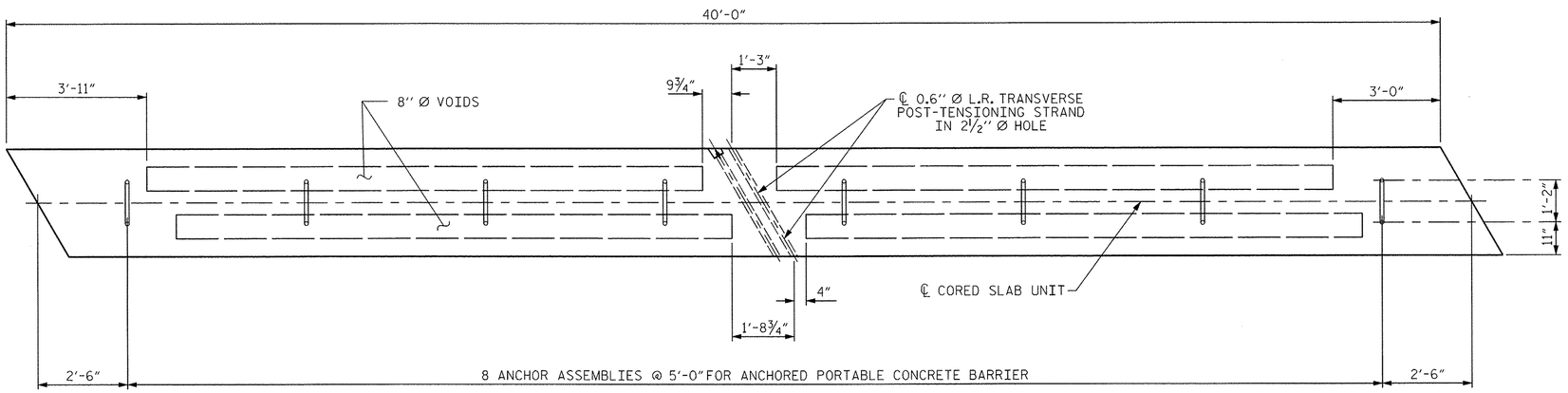

PLAN OF CORED SLAB UNIT #5

(SHOWING LOCATION OF ANCHOR ASSEMBLIES)

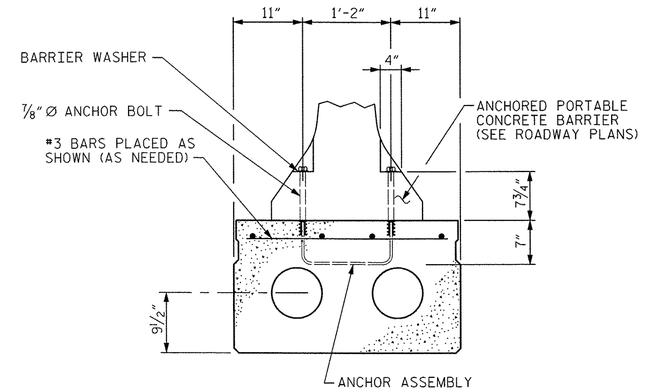

SECTION - CORED SLAB UNIT #5

(SHOWING PLACEMENT OF ANCHOR ASSEMBLY)

THE #3 BARS ARE INCIDENTAL AND THEIR COST SHALL BE INCLUDED IN THE PRICE BID FOR THE PRESTRESSED CONCRETE CORED SLAB

ANCHOR ASSEMBLY NOTES:

THE ANCHOR ASSEMBLY FOR PORTABLE CONCRETE BARRIER SHALL CONSIST OF THE FOLLOWING COMPONENTS:

A. FERRULES SHALL BE MADE FROM STEEL MEETING THE REQUIREMENTS OF AASHTO M169, GRADE 12L14 AND SHALL HAVE A MINIMUM LENGTH OF THREADS OF 2½".

B. 2- ⅞" Ø x 1'-0" ANCHOR BOLTS SHALL CONFORM TO THE REQUIREMENTS OF ASTM A307. ANCHOR BOLTS SHALL BE GALVANIZED. AT THE CONTRACTOR'S OPTION, STAINLESS STEEL BOLTS MAY BE USED AS AN ALTERNATE FOR THE ⅞" Ø x 1'-0" GALVANIZED BOLTS. THEY SHALL CONFORM TO OR EXCEED THE MECHANICAL REQUIREMENTS OF ASTM A307. THE USE OF THIS ALTERNATE SHALL BE APPROVED BY THE ENGINEER.

C. WIRE STRUTS SHOWN IN THE ANCHOR ASSEMBLY DETAIL ARE MINIMUM ALLOWABLE SIZE AND SHALL HAVE A MINIMUM TENSILE STRENGTH OF 100,000 P.S.I.

ANCHOR ASSEMBLY WITH BOLTS SHALL ASSEMBLED IN THE SHOP. BOLT THREADS MAY BE RECUT AS NECESSARY TO INSURE FIT.

THE COST OF THE ANCHOR ASSEMBLY COMPLETE IN PLACE, SHALL BE INCLUDED, AS APPLICABLE, IN THE UNIT CONTRACT PRICE BID FOR 3'-0" x 1'-9" PRESTRESSED CONCRETE CORED SLAB OR LUMP SUM FOR THE APPROACH SLABS.

FERRULES TO BE PLUGGED DURING CASTING OF THE CORED SLAB UNITS OR POURING OF THE APPROACH SLABS AS RECOMMENDED BY THE MANUFACTURER.

AT THE CONTRACTOR'S OPTION, FERRULES WITH OPEN OR CLOSED ENDS MAY BE USED.

FOR 4" x 3½" x ½" BARRIER WASHER TO BE USED WITH THE ANCHOR ASSEMBLY, SEE ROADWAY PLANS.

PAYMENT FOR THE ANCHORED PORTABLE CONCRETE BARRIER AND BARRIER WASHER ARE INCLUDED IN THE TRAFFIC CONTROL PLANS.

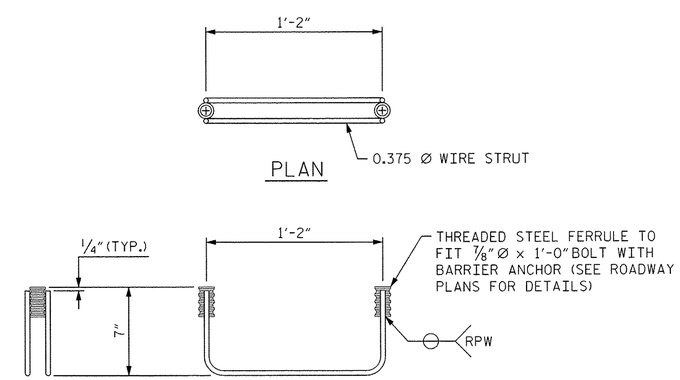

ANCHOR ASSEMBLY FOR ANCHORED PORTABLE CONCRETE BARRIER

(8 ASSEMBLIES REQUIRED IN CORED SLAB UNIT #5)
(4 ASSEMBLIES REQUIRED IN APPROACH SLABS)

PROJECT NO. 17BP.14.R.15
JACKSON COUNTY
STATION: 12+40.00 -L-

SHEET 3 OF 4

AECOM
AECOM TECHNICAL SERVICES, INC.
701 CORPORATE CENTER DRIVE, SUITE 475
RALEIGH, NC 27607
(919) 854-6200 www.aecom.com
AECOM License No. F-0342

NORTH CAROLINA PROFESSIONAL SEAL 030474 ENGINEER JOHN C. MORRISON
2/14/13

STATE OF NORTH CAROLINA
DEPARTMENT OF TRANSPORTATION
RALEIGH

3'-0" X 1'-9"
PRESTRESSED CONCRETE
CORED SLAB UNIT
60° SKEW

REVISIONS						SHEET NO.
NO.	BY:	DATE:	NO.	BY:	DATE:	S-08
						TOTAL SHEETS

DRAWN BY : MTB DATE : 08/12
CHECKED BY : JCM DATE : 08/12

DATE: 2/13/2013
TIME: 11:58:58 AM
USER: BELISLEM
DGN: GN8023872v400_Tech_Info_Disc_FTIles\450_NCDOT Std Textbox Files\BRC_300_LEC\Structure\6300_SpanArch.dgn

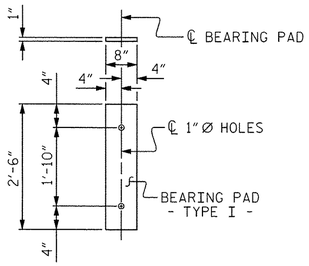

FIXED END
(TYPE I - 18 REQ'D)

ELASTOMERIC BEARING DETAILS

ELASTOMER IN ALL BEARINGS SHALL BE 50 DUROMETER HARDNESS.

GRADE 270 STRANDS	
	0.6" Ø L.R.
AREA (SQUARE INCHES)	0.217
ULTIMATE STRENGTH (LBS. PER STRAND)	58,600
APPLIED PRESTRESS (LBS. PER STRAND)	43,950

CORED SLABS REQUIRED			
	NUMBER	LENGTH	TOTAL LENGTH
40' UNIT			
EXTERIOR C.S.	2	40'-0"	80'-0"
INTERIOR C.S.	7	40'-0"	280'-0"
TOTAL	9	40'-0"	360'-0"

BAR TYPES

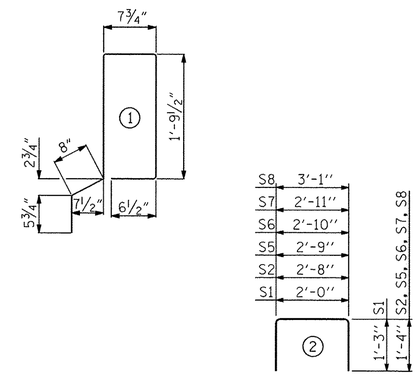

ALL BAR DIMENSIONS ARE OUT TO OUT

NOTES

ALL PRESTRESSING STRANDS SHALL BE 7-WIRE LOW RELAXATION GRADE 270 STRANDS AND SHALL CONFORM TO AASHTO M203 EXCEPT FOR SAMPLING REQUIREMENTS WHICH SHALL BE IN ACCORDANCE WITH THE STANDARD SPECIFICATIONS.

ALL REINFORCING STEEL CAST WITH THE CORED SLAB SECTIONS SHALL BE GRADE 60 AND SHALL BE INCLUDED IN THE UNIT PRICE BID FOR PRESTRESSED CONCRETE CORED SLABS.

RECESSES FOR TRANSVERSE STRANDS SHALL BE GROUTED AFTER THE TENSIONING OF THE STRANDS.

THE 2½" Ø DOWEL HOLES AT FIXED ENDS OF SLAB SECTIONS SHALL BE FILLED WITH NON-SHRINK GROUT.

THE BACKER RODS SHALL CONFORM TO THE REQUIREMENTS OF TYPE M BOND BREAKER. SEE SECTION 1028 OF THE STANDARD SPECIFICATIONS.

WHEN CORED SLABS ARE CAST, AN INTERNAL HOLD-DOWN SYSTEM SHALL BE EMPLOYED TO PREVENT VOIDS FROM RISING OR MOVING SIDEWAYS. AT LEAST SIX WEEKS PRIOR TO CASTING CORED SLABS, THE CONTRACTOR SHALL SUBMIT TO THE ENGINEER FOR REVIEW AND COMMENT, DETAILED DRAWINGS OF THE PROPOSED HOLD-DOWN SYSTEM. IN ADDITION TO STRUCTURAL DETAILS, LOCATION AND SPACING OF THE HOLD-DOWNS SHALL BE INDICATED.

ALL REINFORCING STEEL IN THE CONCRETE PARAPET AND END POSTS SHALL BE EPOXY COATED.

PRESTRESSING STRANDS SHALL BE CUT FLUSH WITH THE CORED SLAB UNIT ENDS.

APPLY EPOXY PROTECTIVE COATING TO CORED SLAB UNIT ENDS.

GROOVED CONTRACTION JOINTS, ½" IN DEPTH, SHALL BE TOOLED IN ALL EXPOSED FACES OF THE PARAPET AND IN ACCORDANCE WITH ARTICLE 825-10(B) OF THE STANDARD SPECIFICATIONS. A CONTRACTION JOINT SHALL BE LOCATED AT EACH THIRD POINT BETWEEN PARAPET EXPANSION JOINTS. ONLY ONE CONTRACTION JOINT IS REQUIRED AT MIDPOINT OF PARAPET SEGMENTS LESS THAN 20 FEET IN LENGTH AND NO CONTRACTION JOINTS ARE REQUIRED FOR THOSE SEGMENTS LESS THAN 10 FEET IN LENGTH.

TRANSVERSE POST TENSIONING OF THE CORED SLAB UNITS SHALL BE DONE IN ACCORDANCE WITH THE STANDARD SPECIFICATIONS.

THE TRANSFER OF LOAD FROM THE ANCHORAGES TO THE CORED SLAB UNIT SHALL BE DONE WHEN THE CONCRETE HAS REACHED A COMPRESSIVE STRENGTH OF NOT LESS THAN THE REQUIRED STRENGTH SHOWN IN THE "CONCRETE RELEASE STRENGTH" TABLE.

FOR GROUT FOR STRUCTURES, SEE SPECIAL PROVISIONS.

FOR BILL OF MATERIAL FOR CONCRETE PARAPET AND END POSTS. SEE "SUPERSTRUCTURE CONCRETE PARAPET AND END POSTS DETAILS" SHEET.

BILL OF MATERIAL FOR ONE 40' CORED SLAB UNIT

				EXTERIOR UNIT		INTERIOR UNIT	
BAR	NUMBER	SIZE	TYPE	LENGTH	WEIGHT	LENGTH	WEIGHT
B4	4	#4	STR	20'-8"	55	20'-8"	55
S1	8	#5	2	4'-6"	38	4'-6"	38
S2	82	#4	2	5'-4"	292	5'-4"	292
* S3	49	#5	1	5'-11"	302		
S5	4	#4	2	5'-5"	14	5'-5"	14
S6	4	#4	2	5'-6"	15	5'-6"	15
S7	4	#4	2	5'-7"	15	5'-7"	15
S8	4	#4	2	5'-9"	15	5'-9"	15
REINFORCING STEEL			LBS.		444		444
* EPOXY COATED REINFORCING STEEL			LBS.		302		
6500 P.S.I. CONCRETE			CU. YDS.		6.2		6.2 *
0.6" Ø L.R. STRANDS			No.		13		13

* 8.2 CU. YDS. AT CORED SLAB UNIT #5 ONLY.

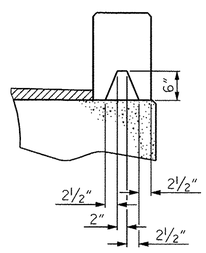

SECTION S-S
AT DAM IN OPEN JOINT
(THIS IS TO BE USED ONLY WHEN SLIP FORM IS USED)

CONCRETE RELEASE STRENGTH	
UNIT	PSI
40' UNITS	4000

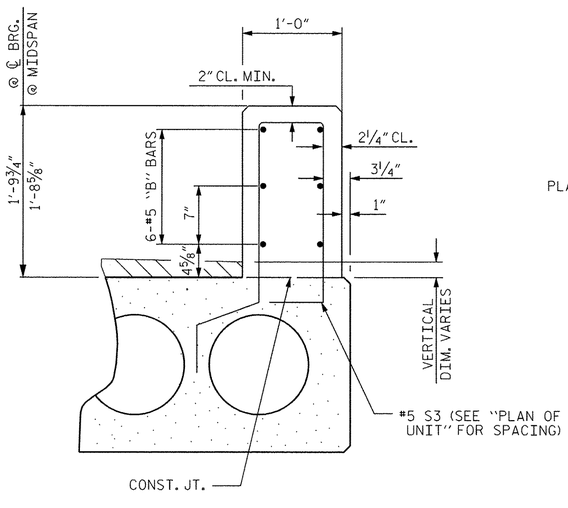

CONCRETE PARAPET SECTION

℄ ½" EXP. JT. MAT'L HELD IN PLACE WITH GALVANIZED NAILS. (NOTE: OMIT EXP. JT. MAT'L. WHEN SLIP FORM IS USED.)

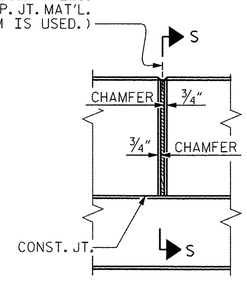

ELEVATION AT EXPANSION JOINTS

GUTTERLINE ASPHALT THICKNESS & RAIL HEIGHT		
24'-10" CLEAR ROADWAY	ASPHALT OVERLAY THICKNESS	RAIL HEIGHT
	@ MID-SPAN	@ MID-SPAN
	SUPERED SECTION	
40' UNITS	2⅝"	1'-8⅝"

DEAD LOAD DEFLECTION AND CAMBER	
	3'-0" x 1'-9"
40' CORED SLAB UNIT	0.6" Ø L.R. STRAND
CAMBER (SLAB ALONE IN PLACE)	1¼' ↑
DEFLECTION DUE TO SUPERIMPOSED DEAD LOAD**	⅛" ↓
FINAL CAMBER	1⅛" ↑

** INCLUDES FUTURE WEARING SURFACE

PROJECT NO. 17BP.14.R.15
JACKSON COUNTY
STATION: 12+40.00 -L-

SHEET 4 OF 4

AECOM
AECOM TECHNICAL SERVICES, INC.
701 CORPORATE CENTER DRIVE, SUITE 475
RALEIGH, NC 27607
(919) 854-6200 www.aecom.com
AECOM License No. F-0342

NORTH CAROLINA PROFESSIONAL SEAL 030474 ENGINEER JOHN C. MORRISON
2/14/13

STATE OF NORTH CAROLINA
DEPARTMENT OF TRANSPORTATION
RALEIGH

3'-0" X 1'-9"
PRESTRESSED CONCRETE
CORED SLAB UNIT
60° SKEW

REVISIONS						SHEET NO.
NO.	BY:	DATE:	NO.	BY:	DATE:	S-09
						TOTAL SHEETS

DRAWN BY : MTB DATE : 08/12
CHECKED BY : JCM DATE : 08/12

DATE: 2/13/2013
TIME: 12:32:56 PM

USER: BELUSLEW
DGN: G:\5202387\2-400_Tech_Info_Disc_Files\450_NCDOT Std Tech\Desf Files\GRE_300_EE\Structures\B300_SpanDetails.dgn

ONE BAR METAL RAIL

BILL OF MATERIAL FOR TWO PARAPETS AND FOUR END POSTS

BAR	NO.	SIZE	TYPE	LENGTH	WEIGHT
✳B11	48	#5	STR	11'-9"	588
✳E1	8	#7	STR	2'-4"	38
✳E2	8	#7	STR	2'-5"	40
✳E3	8	#7	STR	2'-6"	41
✳E4	8	#7	STR	2'-8"	44
✳E5	8	#7	STR	2'-9"	45
✳F1	8	#6	STR	3'-6"	42
✳F2	8	#6	STR	3'-10"	46
✳EPOXY COATED REINFORCING STEEL				LBS.	884
CLASS AA CONCRETE				C.Y.	6.0
CONCRETE PARAPET				L.F.	80.00

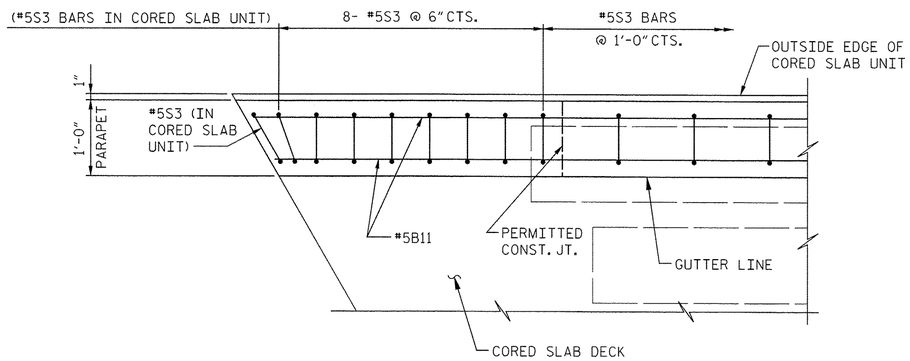

PLAN OF PARAPET
(#7 "E" BARS NOT SHOWN FOR CLARITY)

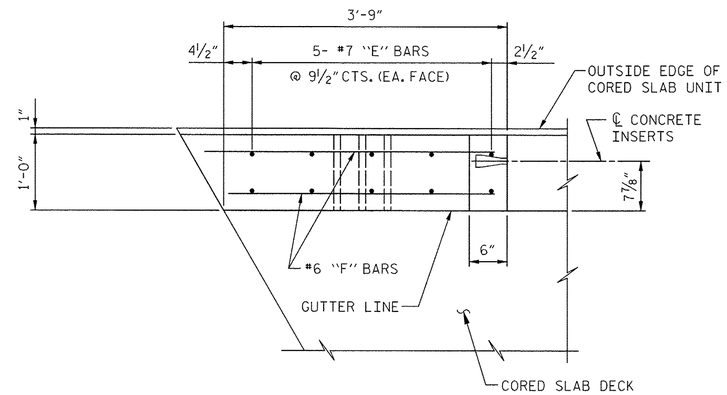

PLAN OF END POST

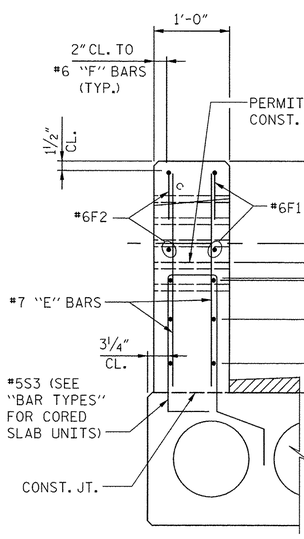

END VIEW

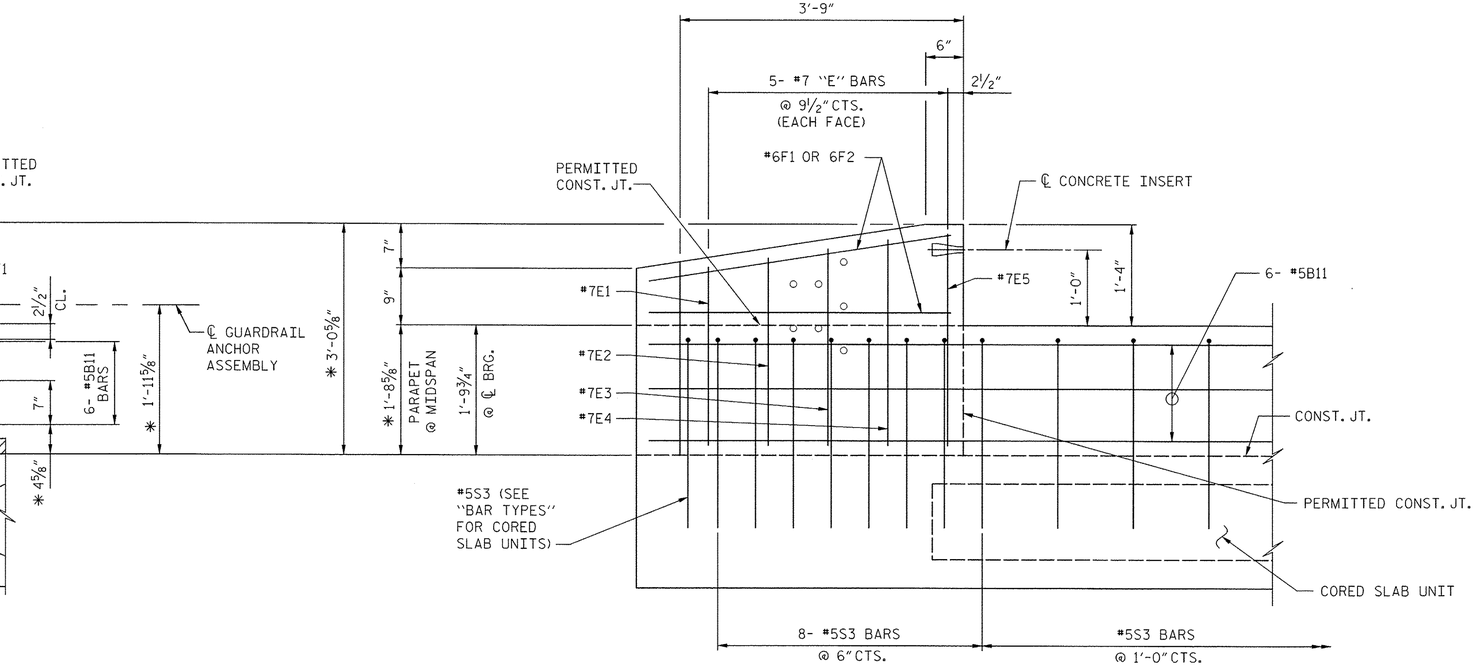

✳ DIMENSIONS ARE BASED ON 2⅝" WEARING SURFACE.

ELEVATION

PROJECT NO. 17BP.14.R.15

JACKSON COUNTY

STATION: 12+40.00 -L-

AECOM
AECOM TECHNICAL SERVICES, INC.
701 CORPORATE CENTER DRIVE, SUITE 475
RALEIGH, NC 27607
(919) 854-6200 www.aecom.com
AECOM License No. F-0342

NORTH CAROLINA PROFESSIONAL SEAL 030474 ENGINEER JOHN C. MORRISON
2/14/13

STATE OF NORTH CAROLINA
DEPARTMENT OF TRANSPORTATION
RALEIGH

SUPERSTRUCTURE
CONCRETE PARAPET
AND END POST DETAILS

REVISIONS						SHEET NO.
NO.	BY:	DATE:	NO.	BY:	DATE:	S-10
						TOTAL SHEETS

PARAPET AND END POST FOR ONE BAR RAIL

DRAWN BY : MTB DATE : 08/12
CHECKED BY : JCM DATE : 08/12

DATE: 2/13/2013
TIME: 12:54:53 PM

USER: BELUSLEM
DGN: 0600528172-v00_Tech_Info_Disc_Files-v150_NC001StdTechDetFiles\BRG_300_LFE\Structures\B300_Parapet.dgn

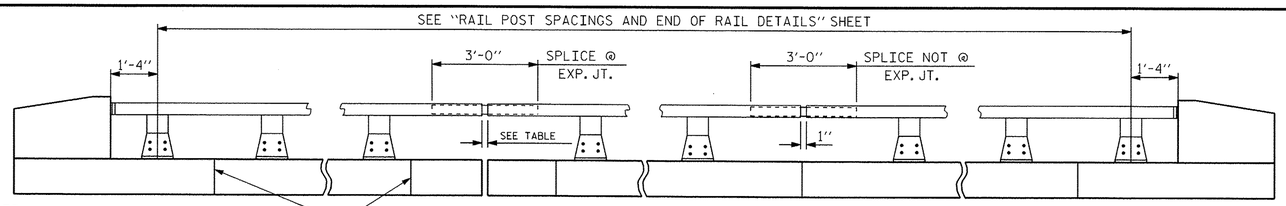

TABLE	
℄ EXP. JT. @	RAIL OPENING
BENT No. 1	
BENT No. 2	

NOTE:
FOR ATTACHMENT OF METAL RAIL TO END POST, SEE STANDARD NO. BMR2.

ELEVATION

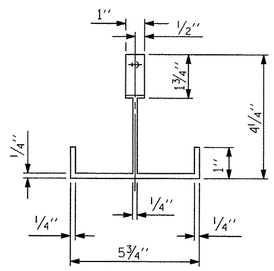

PLAN

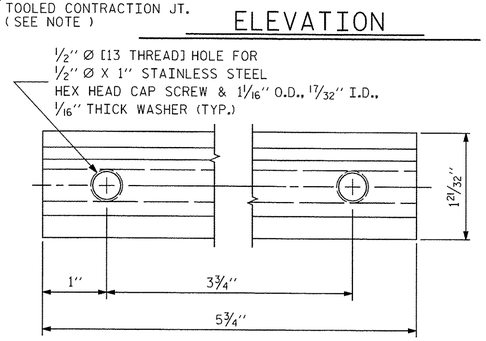

CLAMP BAR DETAIL
(2 REQUIRED PER POST)

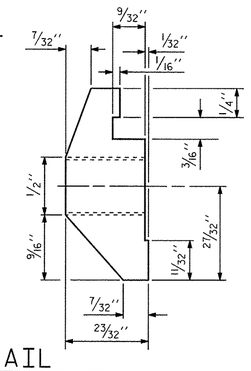

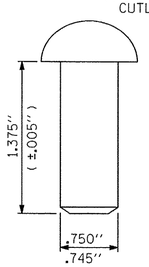

RIVET DETAIL

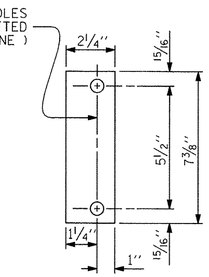

REAR PLATE

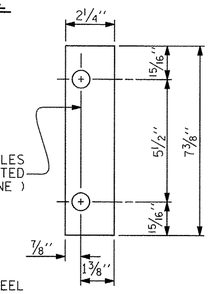

FRONT PLATE

SHIM DETAILS

NOTE : SHIMS MAY BE CUT ALONG PERMITTED CUTLINE OR SLOTTED TO EDGE OF PLATE TO FACILITATE PLACEMENT.

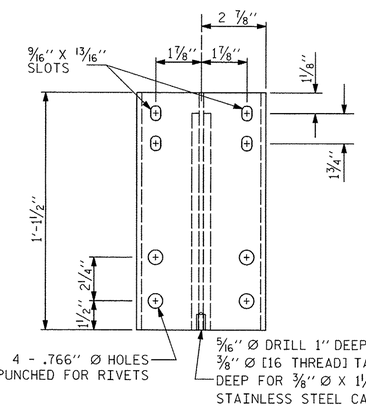

FRONT ELEVATION

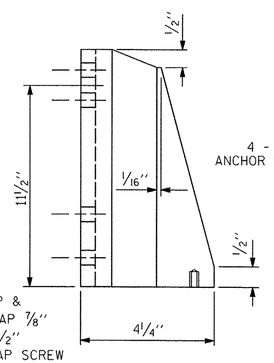

SIDE ELEVATION

DETAILS OF POST

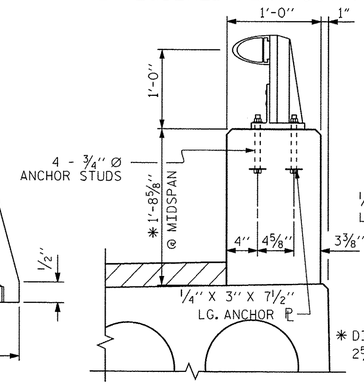

SECTION THRU PARAPET AND RAIL

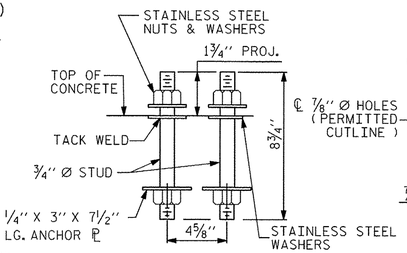

ANCHOR ASSEMBLY

NOTES

AT THE CONTRACTOR'S OPTION, METAL RAIL MAY BE EITHER ALUMINUM OR GALVANIZED STEEL IN ACCORDANCE WITH THE REQUIREMENTS OF THE GENERAL NOTES AND THE FOLLOWING SPECIFICATIONS FOR THE ALTERNATE MATERIALS; HOWEVER THE CONTRACTOR WILL BE REQUIRED TO USE THE SAME RAIL MATERIAL ON ALL STRUCTURES ON THE PROJECT FOR WHICH METAL RAIL IS DESIGNATED.

ALUMINUM RAILS

MATERIAL FOR POSTS, BASES AND RAILS, EXPANSION BARS AND CLAMP BARS SHALL BE ASTM B221 ALLOY 6061-T6.

MATERIAL FOR RIVETS SHALL BE ASTM B316 ALLOY 6061-T6. RIVETS SHALL BE STANDARD BUTTON HEAD AND CONE POINT COLD DRIVEN AS PER DRAWING.

THE BASE OF RAIL POSTS, OR ANY OTHER ALUMINUM SURFACE IN CONTACT WITH CONCRETE SHALL BE THOROUGHLY COATED WITH AN ALUMINUM IMPREGNATED CAULKING COMPOUND OF APPROVED QUALITY.

MATERIAL FOR SHIMS TO BE ASTM B209 ALLOY 6061-T6.

GALVANIZED STEEL RAILS

MATERIALS AND GALVANIZING ARE TO CONFORM TO THE FOLLOWING SPECIFICATIONS:

POST, POST BASES, RAILS, EXPANSION BARS AND CLAMP BARS: AASHTO M270 GRADE 36 STRUCTURAL STEEL - GALVANIZED TO AASHTO M111.

RIVETS: RIVETS SHALL MEET THE REQUIREMENTS OF ASTM A502 FOR GRADE 1 RIVETS.

THE CUT ENDS OF GALVANIZED STEEL RAILING, AFTER GRINDING SMOOTH SHALL BE GIVEN TWO COATS OF ZINC RICH PAINT MEETING THE REQUIREMENTS OF FEDERAL SPECIFICATION MIL-P-26915 USAF TYPE 1, OR OF FEDERAL SPECIFICATIONS TT-P-641.

SHIMS: SHIMS SHALL MEET THE REQUIREMENTS OF ASTM A570 FOR GRADE 33 OR A611 FOR GRADE C AND SHALL BE GALVANIZED IN ACCORDANCE WITH AASHTO M111.

CLOSURE PLATES: CLOSURE PLATES SHALL MEET THE REQUIREMENTS OF ASTM A570 FOR GRADE 33 OR A611 FOR GRADE C AND SHALL BE GALVANIZED IN ACCORDANCE WITH AASHTO M111.

GENERAL NOTES

RAILING SHALL BE CONTINUOUS FROM END POST TO END POST OF BRIDGE. EACH JOINT IN RAIL LENGTH SHALL BE SPLICED AS DETAILED. PANEL LENGTHS OF RAIL SHALL BE ATTACHED TO A MINIMUM OF THREE POSTS.

FOR END OF RAIL TO CLEAR FACE OF CONCRETE END POST DIMENSION, SEE STANDARD NO. BMR2.

MATERIAL FOR ANCHOR STUDS SHALL BE ASTM F593 ALLOY 304 STAINLESS STEEL WITH MINIMUM 75,000 PSI ULTIMATE STRENGTH. STUDS TO BE EMBEDDED 7" IN CONCRETE. NUTS SHALL BE AMERICAN STANDARD FINISHED HEXAGON THICK, CLASS 2B THREAD, AND MEET THE REQUIREMENTS OF ASTM F594 ALLOY 304 STAINLESS STEEL. WASHERS SHALL MEET THE REQUIREMENTS OF ASTM F844 EXCEPT THEY SHALL BE MADE FROM ALLOY 304 STAINLESS STEEL. ANCHOR ℙ SHALL BE AASHTO M270 GRADE 36.

CAP SCREWS SHALL BE ASTM F593 ALLOY 305 STAINLESS STEEL.

CERTIFIED MILL REPORTS ARE REQUIRED FOR RAILS AND POSTS. SHOP INSPECTION IS NOT REQUIRED.

METAL RAIL POSTS SHALL BE SET NORMAL TO CURB GRADE.

METHOD OF MEASUREMENT FOR METAL RAILS: FOR LENGTH OF METAL RAILS TO BE PAID FOR, SEE THE STANDARD SPECIFICATIONS.

CURVED RAIL USAGE: WHERE RAILS ARE TO BE USED ON BRIDGES ON HORIZONTAL AND/OR VERTICAL CURVATURE THE CONTRACTOR MAY, AT HIS OPTION, HAVE THE REQUIRED CURVATURE IN THE RAIL FORMED IN THE SHOP OR IN THE FIELD. IN EITHER EVENT, THE RAIL SHALL CONFORM WITHOUT BUCKLING OR KINKINGTO THE REQUIRED CURVATURE IN A UNIFORM MANNER ACCEPTABLE TO THE ENGINEER.

TO INSURE FUTURE IDENTIFICATION OF THE FABRICATOR, A PERMANENT IDENTIFYING MARK SHALL BE PLACED ON EACH POST. THE METHOD OF MARKING AND LOCATION SHALL BE SUCH THAT IT DOES NOT DETRACT FROM THE APPEARANCE OF THE POST.

SHIMS SHALL BE USED AS NECESSARY FOR POST ALIGNMENT.

ALLOY 6351-T5 MAY BE SUBSTITUTED FOR ALLOY 6061-T6 WHERE APPLICABLE.

MINOR VARIATIONS IN DETAILS OF METAL RAIL WILL BE CONSIDERED. DETAILS OF SUCH VARIATIONS, IF DESIRED, SHALL BE SUBMITTED FOR APPROVAL.

THE CONTRACTOR MAY USE ADHESIVELY ANCHORED ANCHOR BOLTS IN PLACE OF THE ANCHOR ASSEMBLY. LEVEL TWO FIELD TESTING IS REQUIRED, AND THE YIELD LOAD OF THE 3/4" Ø BOLT IS 10 KIPS IN ACCORDANCE WITH THE STANDARD SPECIFICATIONS.

WHEN ADHESIVELY ANCHORED ANCHOR BOLTS ARE USED, BOLTS, NUTS AND WASHERS SHALL MEET THE SAME REQUIREMENTS AS THE ANCHOR STUDS, NUTS AND WASHERS FOR USE WITH THE ANCHOR ASSEMBLY.

GROOVED CONTRACTION JOINTS, 1/2" IN DEPTH, SHALL BE TOOLED IN ALL EXPOSED FACES OF THE PARAPET AND IN ACCORDANCE WITH ARTICLE 825-10(B) OF THE STANDARD SPECIFICATIONS. A CONTRACTION JOINT SHALL BE LOCATED AT EACH THIRD POINT BETWEEN PARAPET EXPANSION JOINTS. ONLY ONE CONTRACTION JOINT IS REQUIRED AT MIDPOINT OF PARAPET SEGMENTS LESS THAN 20 FEET IN LENGTH AND NO CONTRACTION JOINTS ARE REQUIRED FOR THOSE SEGMENTS LESS THAN 10 FEET IN LENGTH.

PAY LENGTH = 64.15 LIN. FT.

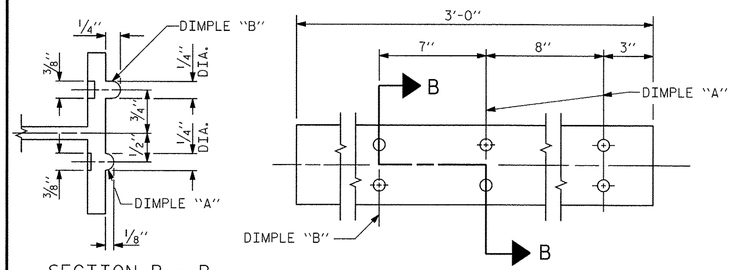

SECTION B - B

EXPANSION BAR DETAILS

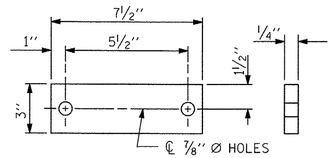

ANCHOR PLATE

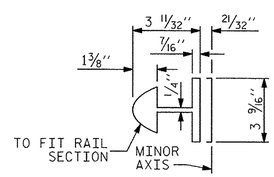

BAR SECTION

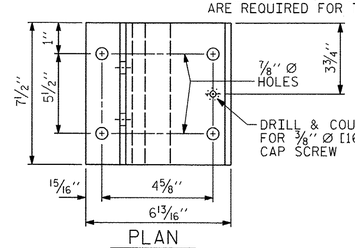

PLAN

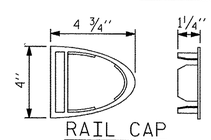

RAIL CAP

NOTE : BASE CAN BE SUPPLIED AS ONE EXTRUSION OR TWO EXTRUSIONS WELDED TOGETHER AS SHOWN.

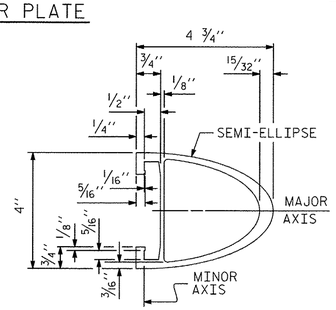

RAIL SECTION

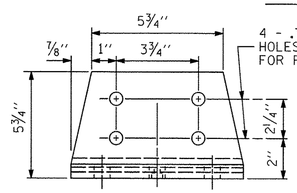

FRONT ELEVATION

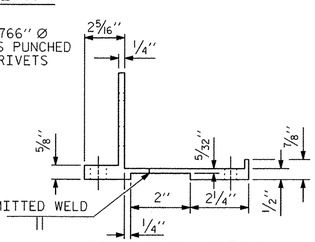

SIDE ELEVATION

POST BASE DETAILS

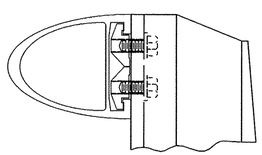

CLAMP BAR ASSEMBLY

ASSEMBLED BY :	MTB	DATE :	08/12
CHECKED BY :	JCM	DATE :	08/12
DRAWN BY : FCJ 1/88	REV. 5/7/03R		RWW/JTE
CHECKED BY : CRK 3/89	REV. 5/1/06R		KMM/GM
	REV. 10/1/11		MAA/GM

AECOM
AECOM TECHNICAL SERVICES, INC.
701 CORPORATE CENTER DRIVE, SUITE 475
RALEIGH, NC 27607
(919) 854-6200 www.aecom.com
AECOM License No. F-0342

NORTH CAROLINA PROFESSIONAL SEAL 030474 ENGINEER JOHN C. MORRISON
2/14/13

PROJECT NO. 17BP.14.R.15
JACKSON COUNTY
STATION: 12+40.00 -L-

SHEET 1 OF 2

STATE OF NORTH CAROLINA
DEPARTMENT OF TRANSPORTATION
RALEIGH

STANDARD

1 BAR METAL RAIL

REVISIONS						SHEET NO.
NO.	BY:	DATE:	NO.	BY:	DATE:	S-11
1			3			TOTAL SHEETS
2			4			

STD. NO. BMR1

USER: BEUSLEM DGN: QC60C38172-H400_Tech_Info_Disc_Fillet450_NCDOT Std Textbook Files\BRG_300_EDS\Structures\B300_MM_Railing.dgn
DATE: 2/13/2013 TIME: 10:38:43 PM

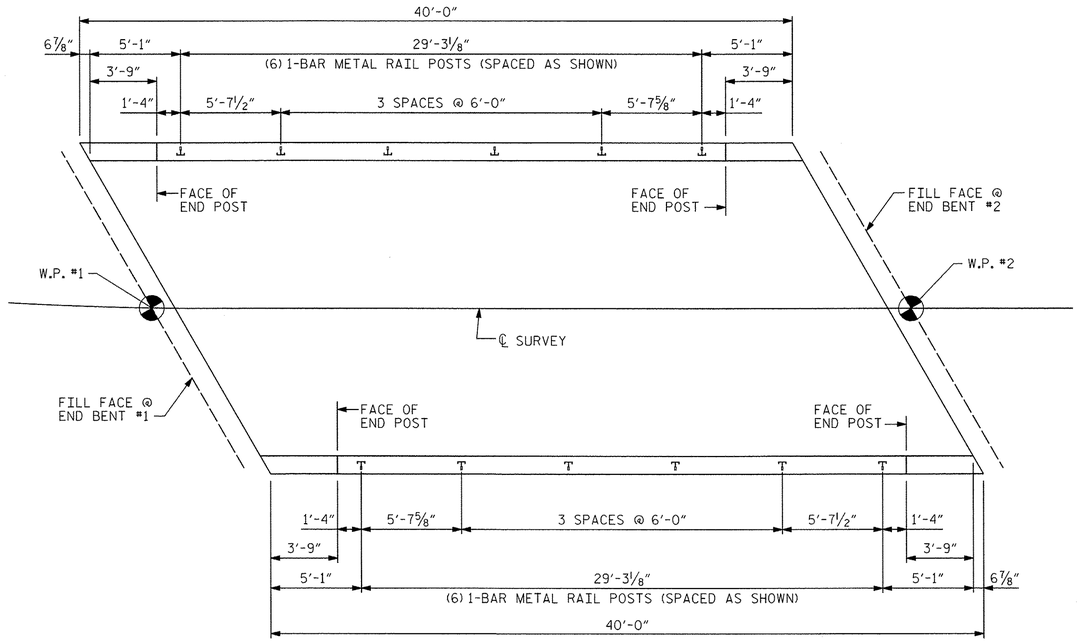

PLAN OF RAIL POST SPACINGS

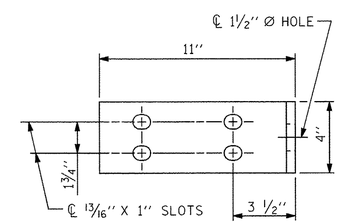

ELEVATION

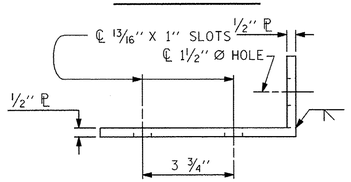

TOP VIEW

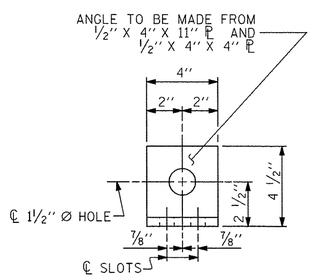

END VIEW (FIX AND EXP.)

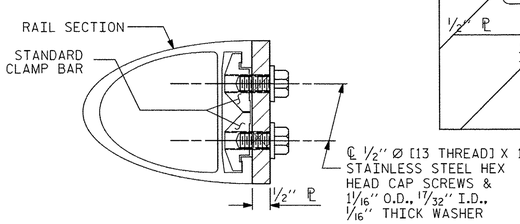

SECTION H-H (FIX)

FIXED

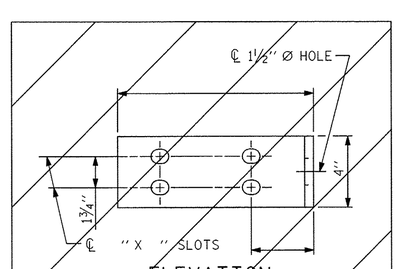

ELEVATION

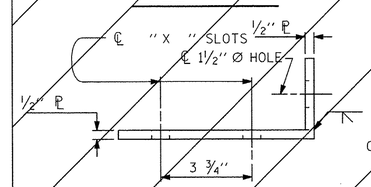

TOP VIEW

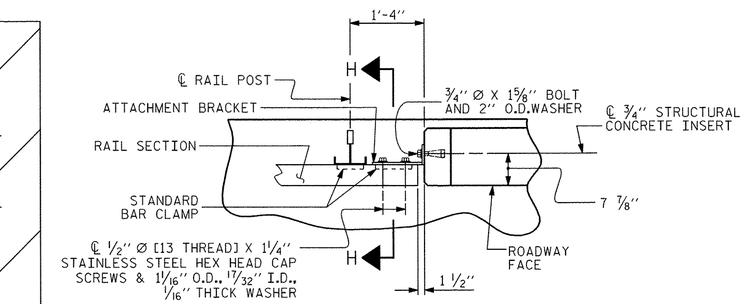

PLAN - RAIL AND END POST

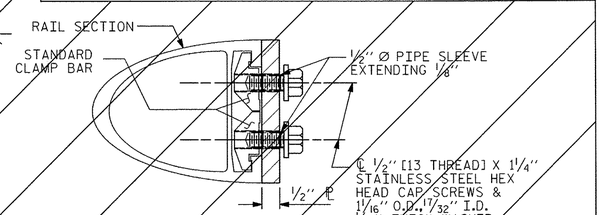

SECTION H-H (EXP.)

EXPANSION

USE AT EXPANSION JOINT WHEN END POST IS LOCATED ON THE APPROACH SLAB

DETAILS FOR ATTACHING METAL RAIL TO END POST

NOTES

STRUCTURAL CONCRETE INSERT

THE STRUCTURAL CONCRETE INSERT ASSEMBLY SHALL CONSIST OF THE FOLLOWING COMPONENTS:

A. FERRULES SHALL BE MADE FROM STEEL MEETING THE REQUIREMENTS OF AASHTO M169, GRADE 12L14 AND SHALL HAVE A MINIMUM LENGTH OF THREADS OF 1 1/2".

B. 1 - 3/4" Ø X 1 5/8" BOLT WITH WASHER. BOLT SHALL CONFORM TO THE REQUIREMENTS OF ASTM A307. BOLT AND WASHER SHALL BE GALVANIZED. (AT THE CONTRACTOR'S OPTION, STAINLESS STEEL BOLT AND WASHER MAY BE USED AS AN ALTERNATE FOR THE 3/4" Ø X 1 5/8" GALVANIZED BOLT AND WASHER. THEY SHALL CONFORM TO OR EXCEED THE MECHANICAL REQUIREMENTS OF ASTM A307. THE USE OF THIS ALTERNATE SHALL BE APPROVED BY THE ENGINEER.)

C. WIRE STRUT SHOWN IN THE CONCRETE INSERT ASSEMBLY DETAIL IS THE MINIMUM ALLOWABLE SIZE AND SHALL HAVE A MINIMUM TENSILE STRENGTH OF 100,000 PSI. AS AN OPTION, A 7/16" Ø WIRE STRUT WITH A MINIMUM TENSILE STRENGTH OF 90,000 PSI IS ACCEPTABLE.

NOTES

METAL RAIL TO END POST CONNECTION

THE METAL RAIL TO END POST CONNECTION SHALL CONSIST OF THE FOLLOWING COMPONENTS:

A. 1/2" PLATES SHALL CONFORM TO AASHTO M270 GRADE 36 AND SHALL BE GALVANIZED AFTER FABRICATION.

B. 3/4" STRUCTURAL CONCRETE INSERT SHALL HAVE A WORKING LOAD SHEAR CAPACITY OF 4800 LBS. THE FERRULES SHALL ENGAGE A 3/4"Ø X 1 5/8" BOLT WITH 2" O.D. WASHER IN PLACE. THE 3/4"Ø X 1 5/8" BOLT SHALL HAVE N. C. THREADS.

C. CAP SCREWS FOR RAIL ATTACHMENT TO ANGLE SHALL CONFORM TO THE REQUIREMENTS OF ASTM F593 ALLOY 305 STAINLESS STEEL. CAP SCREWS TO BE CENTERED IN SLOTS AT 60°F.

D. STANDARD CLAMP BARS (SEE METAL RAIL SHEET).

E. 1/2" Ø PIPE SLEEVES (IF REQUIRED) TO BE GALVANIZED.

THE COST OF THE STANDARD CLAMP BARS AND CAP SCREWS USED IN THE METAL RAIL TO END POST CONNECTION SHALL BE INCLUDED IN THE UNIT CONTRACT PRICE BID FOR LINEAR FEET OF 1 OR 2 BAR METAL RAILS.

THE 3/4" STRUCTURAL CONCRETE INSERT WITH BOLT SHALL BE ASSEMBLED IN THE SHOP.

THE COST OF THE 3/4" STRUCTURAL CONCRETE INSERT ASSEMBLY, AND THE 1/2" PLATES COMPLETE IN PLACE SHALL BE INCLUDED IN THE VARIOUS PAY ITEMS.

THE CONTRACTOR, AT HIS OPTION, MAY USE AN ADHESIVE BONDING SYSTEM IN LIEU OF THE STRUCTURAL CONCRETE INSERT EMBEDDED IN THE END POST. IF THE ADHESIVE BONDING SYSTEM IS USED, THE 3/4" Ø X 1 5/8" BOLT WITH WASHER SHALL BE REPLACED WITH A 3/4"Ø X 6 1/2" BOLT AND 2" O.D. WASHER. ALL SPECIFICATIONS THAT APPLY TO THE 3/4" Ø X 1 5/8" BOLT SHALL APPLY TO THE 3/4"Ø X 6 1/2" BOLT. FIELD TESTING OF THE ADHESIVE BONDING SYSTEM IS NOT REQUIRED.

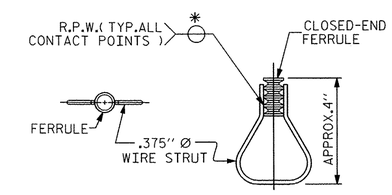

PLAN ELEVATION

STRUCTURAL CONCRETE INSERT

* EACH WELDED ATTACHMENT OF WIRE TO FERRULE SHALL DEVELOP THE TENSILE STRENGTH OF THE WIRE.

PROJECT NO. 17BP.14.R.15

JACKSON COUNTY

STATION: 12+40.00 -L-

SHEET 2 OF 2

AECOM
AECOM TECHNICAL SERVICES, INC.
701 CORPORATE CENTER DRIVE, SUITE 475
RALEIGH, NC 27607
(919) 854-6200 www.aecom.com
AECOM License No. F-0342

NORTH CAROLINA PROFESSIONAL SEAL 030474 ENGINEER JOHN C. MORRIGON
2/14/13

STATE OF NORTH CAROLINA
DEPARTMENT OF TRANSPORTATION
RALEIGH
STANDARD

RAIL POST SPACINGS AND END OF RAIL DETAILS
FOR ONE OR TWO BAR METAL RAILS

REVISIONS						SHEET NO.
NO.	BY:	DATE:	NO.	BY:	DATE:	S-12
1			3			TOTAL SHEETS
2			4			

STD. NO. BMR2

ASSEMBLED BY : MTB		DATE : 08/12	
CHECKED BY : JCM		DATE : 08/12	
DRAWN BY : FCJ 1/88	REV. 5/7/03	RWW/JTE	
CHECKED BY : CRK 3/89	REV. 5/1/06	TLA/GM	
	REV. 10/1/11	MAA/GM	

DATE: 2/13/2013
TIME: 12:36:69 PM

USER: BEUSLEM
DGN: GN8025877v200_Tech_Info_Disc_Files\450_WC\DOT Std Tech Def Files\BRG_300_EE3\structure\B300_MN_Railing2.dgn

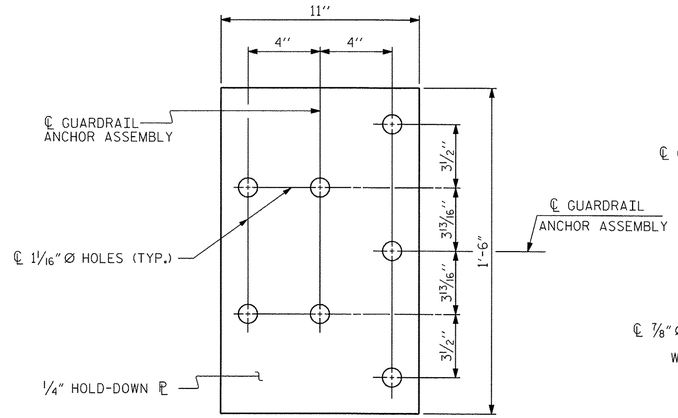

PLAN

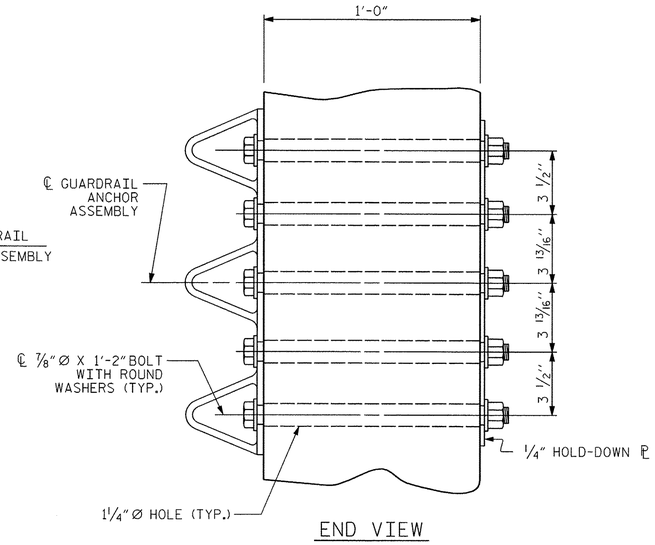

END VIEW

GUARDRAIL ANCHOR ASSEMBLY DETAILS

NOTES

THE GUARDRAIL ANCHOR ASSEMBLY SHALL CONSIST OF A 1/4" HOLD DOWN PLATE AND 7 - 7/8" Ø BOLTS WITH NUTS AND WASHERS.

THE HOLD-DOWN PLATE SHALL CONFORM TO AASHTO M270 GRADE 36. AFTER FABRICATION, THE HOLD-DOWN PLATE SHALL BE HOT-DIP GALVANIZED IN ACCORDANCE WITH AASHTO M111.

BOLTS SHALL CONFORM TO THE REQUIREMENTS OF ASTM A307 AND NUTS SHALL CONFORM TO THE REQUIREMENTS OF AASHTO M291. BOLTS, NUTS AND WASHERS SHALL BE GALVANIZED. AT THE CONTRACTOR'S OPTION, STAINLESS STEEL BOLTS, NUTS AND WASHERS MAY BE USED AS AN ALTERNATE FOR THE 7/8" Ø GALVANIZED BOLTS, NUTS AND WASHERS. THEY SHALL CONFORM TO OR EXCEED THE MECHANICAL REQUIREMENTS OF ASTM A307. THE USE OF THIS ALTERNATE SHALL BE APPROVED BY THE ENGINEER.

THE GUARDRAIL ANCHOR ASSEMBLY IS REQUIRED AT ALL POINTS WHERE APPROACH GUARDRAIL IS TO BE ATTACHED TO THE END OF THE PARAPET. FOR POINTS OF ATTACHMENT, SEE SKETCH.

AFTER INSTALLATION, THE EXPOSED THREAD OF THE BOLT SHALL BE BURRED WITH A SHARP POINTED TOOL.

THE COST OF THE GUARDRAIL ANCHOR ASSEMBLIES WITH BOLTS, NUTS AND WASHERS COMPLETE IN PLACE, SHALL BE INCLUDED IN THE VARIOUS PAY ITEMS.

THE VERTICAL REINFORCING BARS MAY BE SHIFTED SLIGHTLY IN THE END POST TO CLEAR ASSEMBLY BOLTS.

THE 1 1/4" Ø HOLES SHALL BE FORMED OR DRILLED WITH A CORE BIT. IMPACT TOOLS WILL NOT BE PERMITTED. ANY CONCRETE DAMAGED BY THIS WORK SHALL BE REPAIRED TO THE SATISFACTION OF THE ENGINEER.

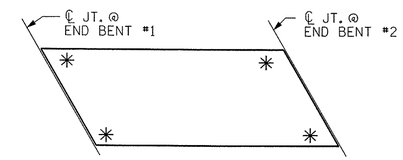

SKETCH SHOWING POINTS OF ATTACHMENT

✳ LOCATION OF GUARDRAIL ATTACHMENT

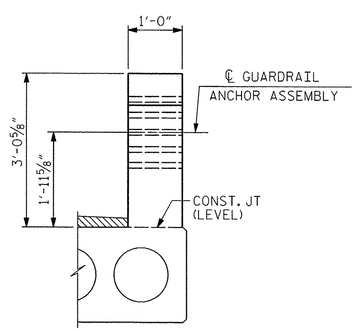

END VIEW
(ONE BAR METAL RAIL)

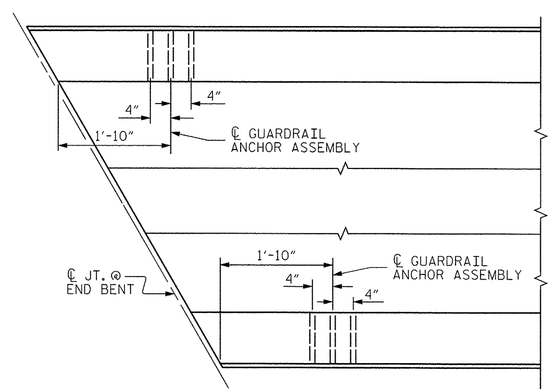

PLAN

LOCATION OF GUARDRAIL ANCHOR AT END POST

PROJECT NO. 17BP.14.R.15
JACKSON COUNTY
STATION: 12+40.00 -L-

AECOM
AECOM TECHNICAL SERVICES, INC.
701 CORPORATE CENTER DRIVE, SUITE 475
RALEIGH, NC 27607
(919) 854-6200 www.aecom.com
AECOM License No. F-0342

NORTH CAROLINA PROFESSIONAL SEAL 030474 ENGINEER JOHN C. MORRISON
2/14/13

STATE OF NORTH CAROLINA
DEPARTMENT OF TRANSPORTATION
RALEIGH

STANDARD
GUARDRAIL ANCHORAGE DETAILS FOR METAL RAILS

REVISIONS							
NO.	BY:	DATE:	NO.	BY:	DATE:	SHEET NO.	S-13
1			3			TOTAL SHEETS	
2			4				

ASSEMBLED BY :	MTB	DATE :	08/12
CHECKED BY :	JCM	DATE :	08/12
DRAWN BY : MAA 5/10		ADDED 5/6/10	
CHECKED BY : GM 5/10		REV. 10/1/11	MAA/GM
		REV. 12/5/11	MAA/GM

STD. NO. GRA3 (Sht. 6)

DATE: 2/13/2013
TIME: 12:46:34 PM
USER: REGISLEM
DGN: G:\ROADWAY\2400_Tech_Info_Files\450_NCDOT STAFF tech base files\BRG_300_ES\Structures\B300_Guardrail.dgn

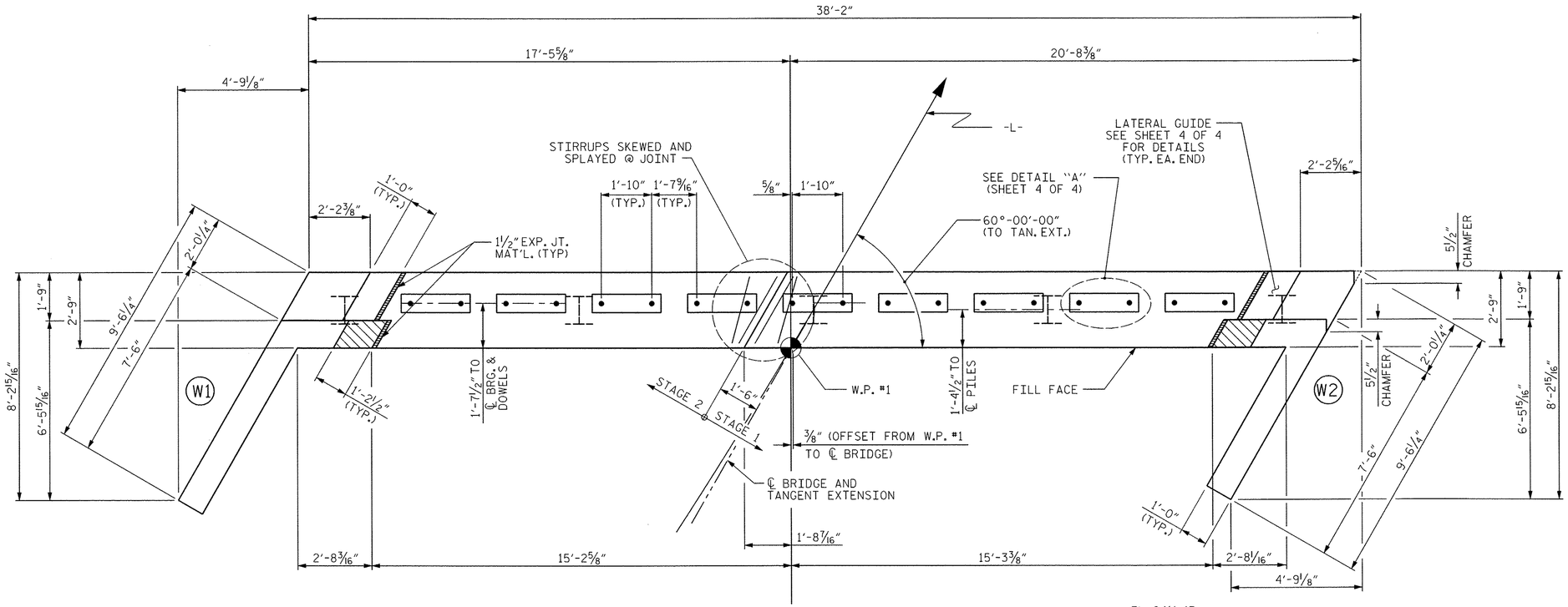

PLAN

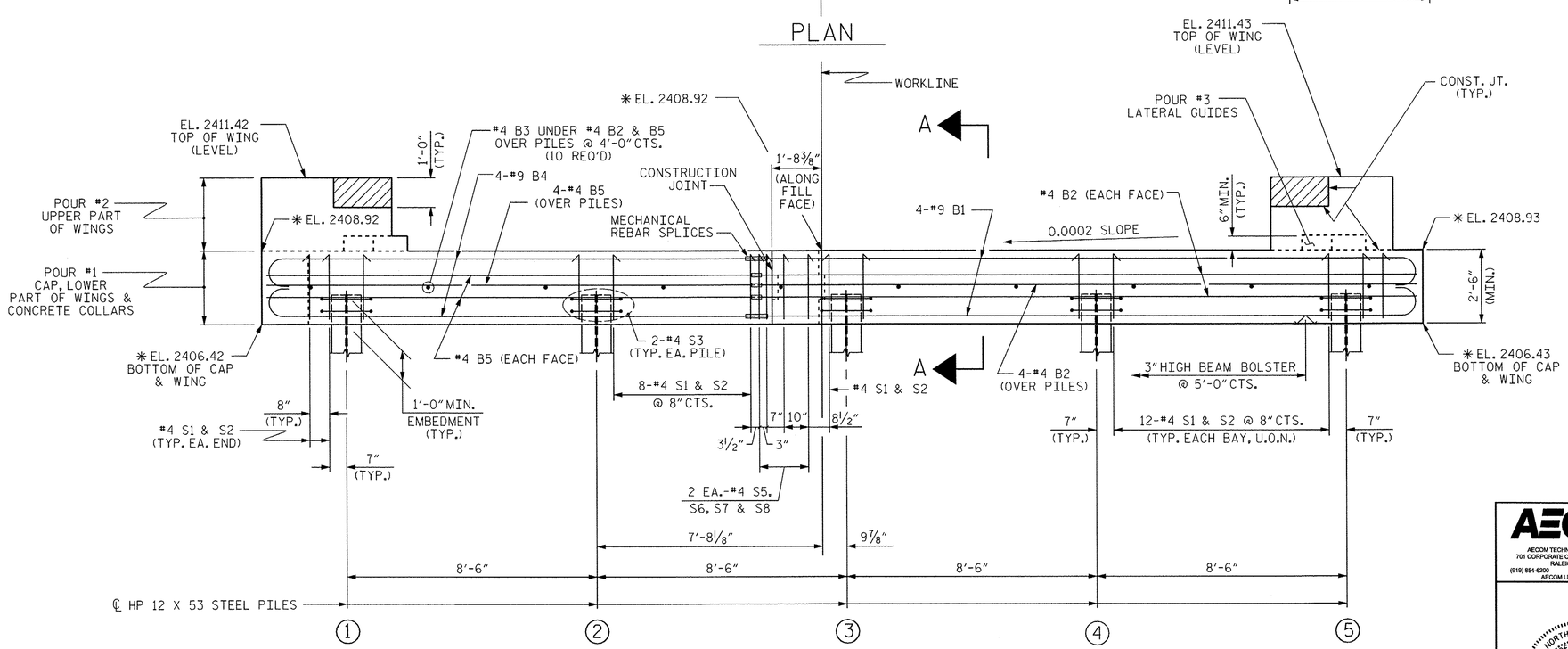

ELEVATION

WINGS NOT SHOWN FOR CLARITY.
FOR SECTION A-A, SEE SHEET 4 OF 4.
CONCRETE COLLARS FOR STEEL PILES NOT SHOWN IN PLAN AND ELEVATION VIEWS FOR CLARITY.
SEE "CORROSION PROTECTION FOR STEEL PILES DETAIL", SHEET 4 OF 4.

NOTES

STIRRUPS IN CAP MAY BE SHIFTED AS NECESSARY TO CLEAR DOWELS.

THE LATERAL GUIDES ARE NOT TO BE POURED UNTIL AFTER THE CORED SLAB UNITS ARE IN PLACE.

THE CONCRETE IN THE SHADED AREA OF THE WING SHALL BE POURED AFTER THE VERTICAL CONCRETE BARRIER RAIL IS CAST IF SLIP FORMING IS USED.

FOR PILE SPLICE DETAILS, SEE SHEET 4 OF 4.

FOR WING DETAILS, SEE SHEET 3 OF 4.

THE CONTRACTOR HAS THE OPTION TO OMIT THE LATERAL GUIDE IF APPROVED BY THE ENGINEER.

FOR MECHANICAL SPLICES, SEE SECTION 425-5(B) OF THE STANDARD SPECIFICATIONS.

TOP OF PILE ELEVATIONS	
1	2407.43
2	2407.43
3	2407.43
4	2407.43
5	2407.43

✱ELEVATIONS PROJECTED ALONG ℄ BEARINGS.

PROJECT NO. 17BP.14.R.15

JACKSON COUNTY

STATION: 12+40.00 -L-

SHEET 1 OF 4

AECOM
AECOM TECHNICAL SERVICES, INC.
701 CORPORATE CENTER DRIVE, SUITE 475
RALEIGH, NC 27607
(919) 854-6200 www.aecom.com
AECOM License No. F-0342

NORTH CAROLINA PROFESSIONAL SEAL 030474 ENGINEER JOHN C. MORRISON
2/14/13

STATE OF NORTH CAROLINA
DEPARTMENT OF TRANSPORTATION
RALEIGH

SUBSTRUCTURE

END BENT No. 1

REVISIONS						SHEET NO.
NO.	BY:	DATE:	NO.	BY:	DATE:	S-14
1			3			TOTAL SHEETS
2			4			

ASSEMBLED BY : MTB	DATE : 08/12
CHECKED BY : JCM	DATE : 08/12
DRAWN BY : DGE 01/10	
CHECKED BY : MKT 01/10	

STD. NO. EB_27_60S

DATE: 2/13/2013
TIME: 12:43:58 PM

USER: REUSLEM
DGN: G:\60236917\2\400_Tech_Info_Dis_Files\450_NCDOT Std Tech Dis Files\BRG_300_EB Structures\S300_EndBent1.dgn

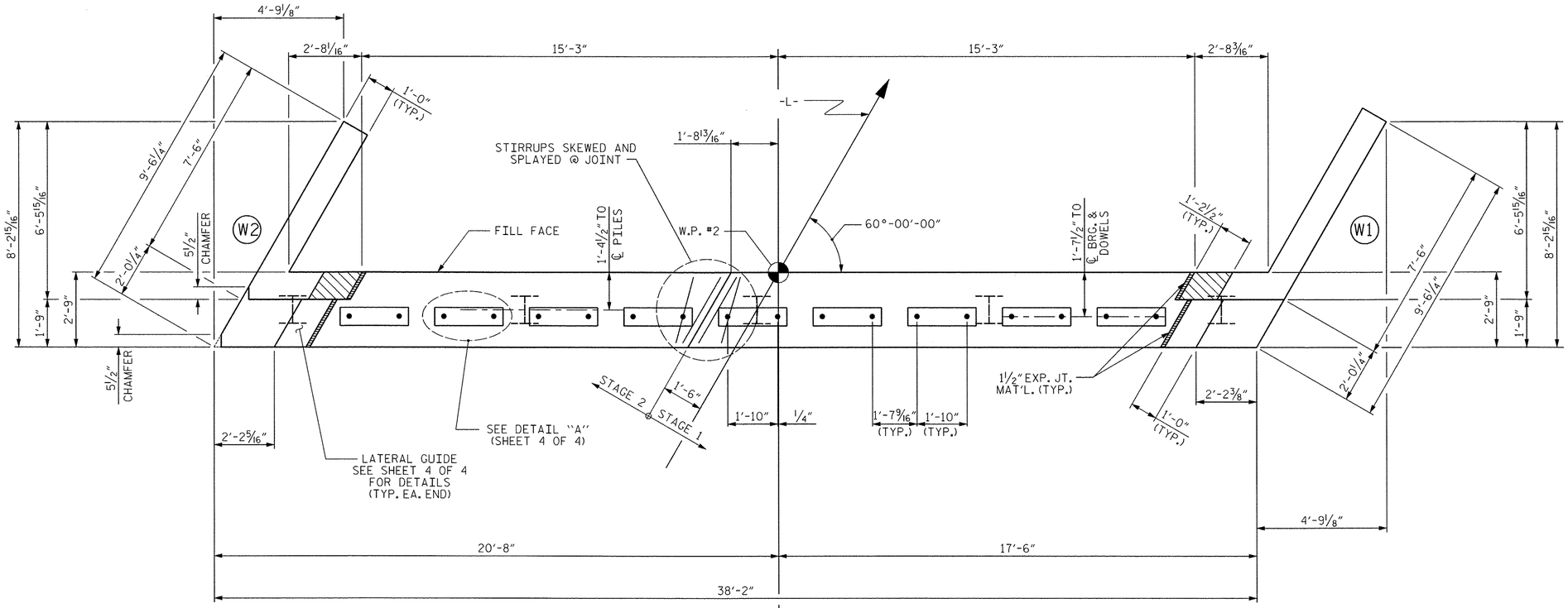

PLAN

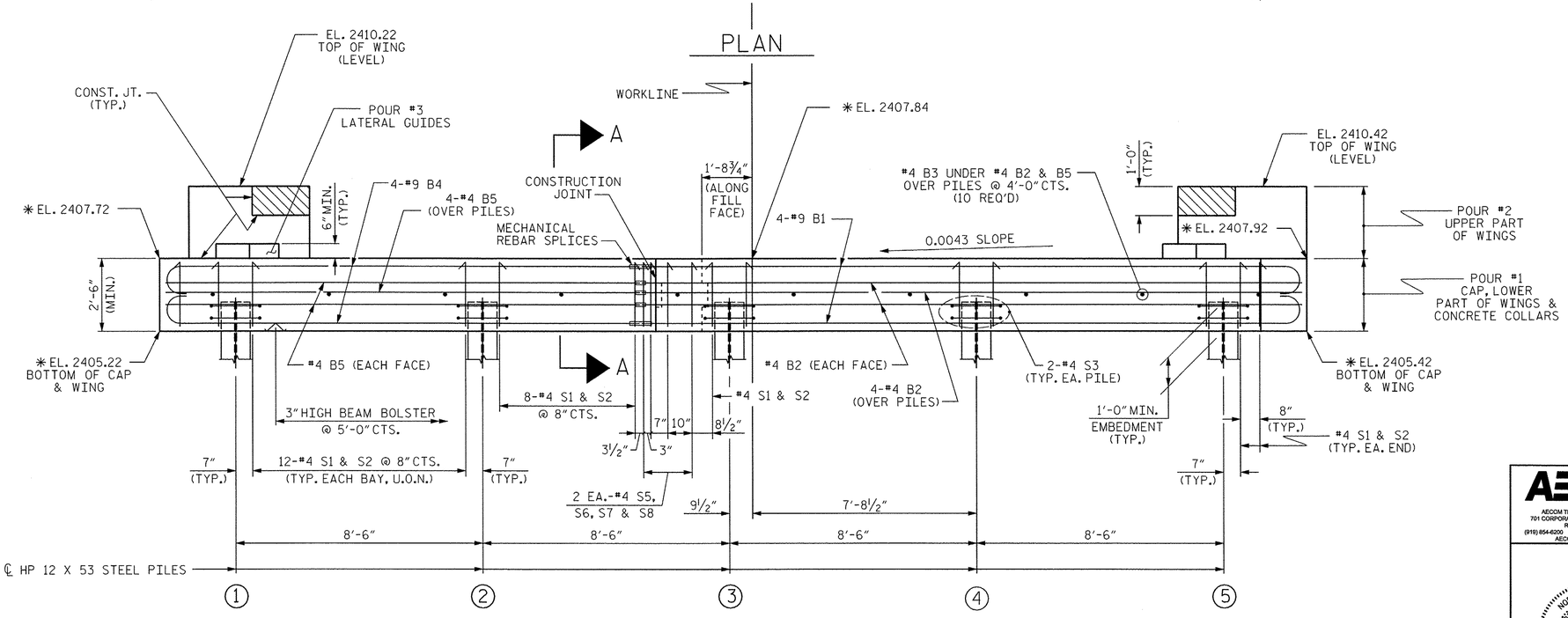

ELEVATION

WINGS NOT SHOWN FOR CLARITY.
FOR SECTION A-A, SEE SHEET 4 OF 4.
CONCRETE COLLARS FOR STEEL PILES NOT SHOWN IN PLAN AND ELEVATION VIEWS FOR CLARITY.
SEE "CORROSION PROTECTION FOR STEEL PILES DETAIL", SHEET 4 OF 4.

NOTES

STIRRUPS IN CAP MAY BE SHIFTED AS NECESSARY TO CLEAR DOWELS.

THE LATERAL GUIDES ARE NOT TO BE POURED UNTIL AFTER THE CORED SLAB UNITS ARE IN PLACE.

THE CONCRETE IN THE SHADED AREA OF THE WING SHALL BE POURED AFTER THE VERTICAL CONCRETE BARRIER RAIL IS CAST IF SLIP FORMING IS USED.

FOR PILE SPLICE DETAILS, SEE SHEET 4 OF 4.

FOR WING DETAILS, SEE SHEET 3 OF 4.

THE CONTRACTOR HAS THE OPTION TO OMIT THE LATERAL GUIDE IF APPROVED BY THE ENGINEER.

FOR MECHANICAL SPLICES, SEE SECTION 425-5(B) OF THE STANDARD SPECIFICATIONS.

TOP OF PILE ELEVATIONS	
1	2406.26
2	2406.30
3	2406.34
4	2406.37
5	2406.41

✱ ELEVATIONS PROJECTED ALONG ℄ BEARINGS.

PROJECT NO. 17BP.14.R.15
JACKSON COUNTY
STATION: 12+40.00 -L-
SHEET 2 OF 4

AECOM
AECOM TECHNICAL SERVICES, INC.
701 CORPORATE CENTER DRIVE, SUITE 475
RALEIGH, NC 27607
(919) 854-6200 www.aecom.com
AECOM License No. F-0342

NORTH CAROLINA PROFESSIONAL SEAL 030474 ENGINEER JOHN C. MORRIGON
2/14/13

STATE OF NORTH CAROLINA
DEPARTMENT OF TRANSPORTATION
RALEIGH

SUBSTRUCTURE
END BENT No. 2

REVISIONS						SHEET NO.
NO.	BY:	DATE:	NO.	BY:	DATE:	S-15
1			3			TOTAL SHEETS
2			4			

ASSEMBLED BY : MTB	DATE : 08/12
CHECKED BY : JCM	DATE : 08/12
DRAWN BY : DGE 01/10	
CHECKED BY : MKT 01/10	

STD. NO. EB_27_60S

DATE: 2/13/2013
TIME: 12:46:03 PM

USER: BELISLEM
DGN: C:\SUBSTRUCTURE\400_Tech_Info_Disc_Files\450_NCDOT Std Text\DesFiles\BRS_300_EB_Structure\S300_EndBent2.dgn

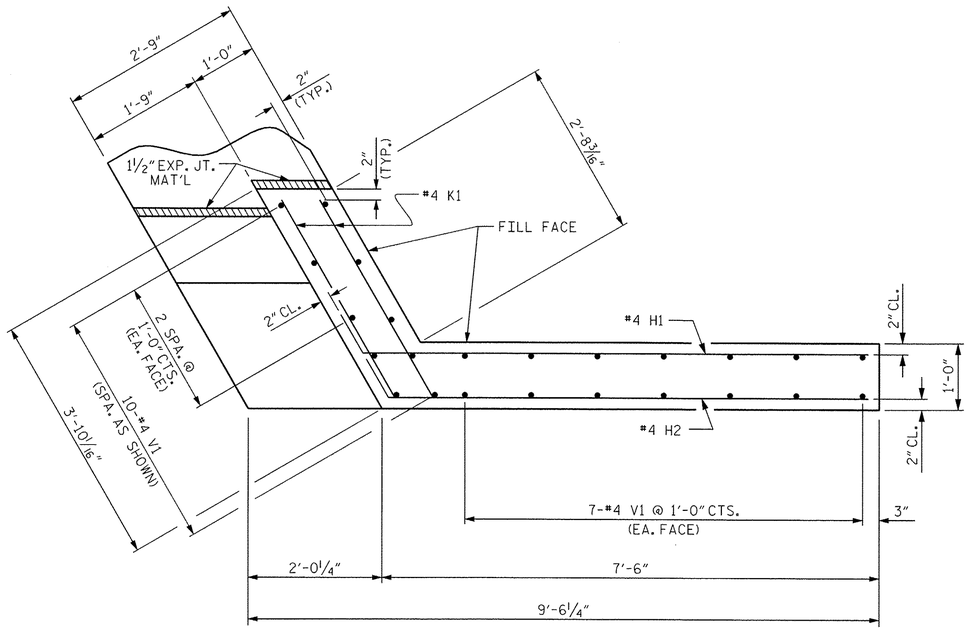

PLAN OF WING (W1)

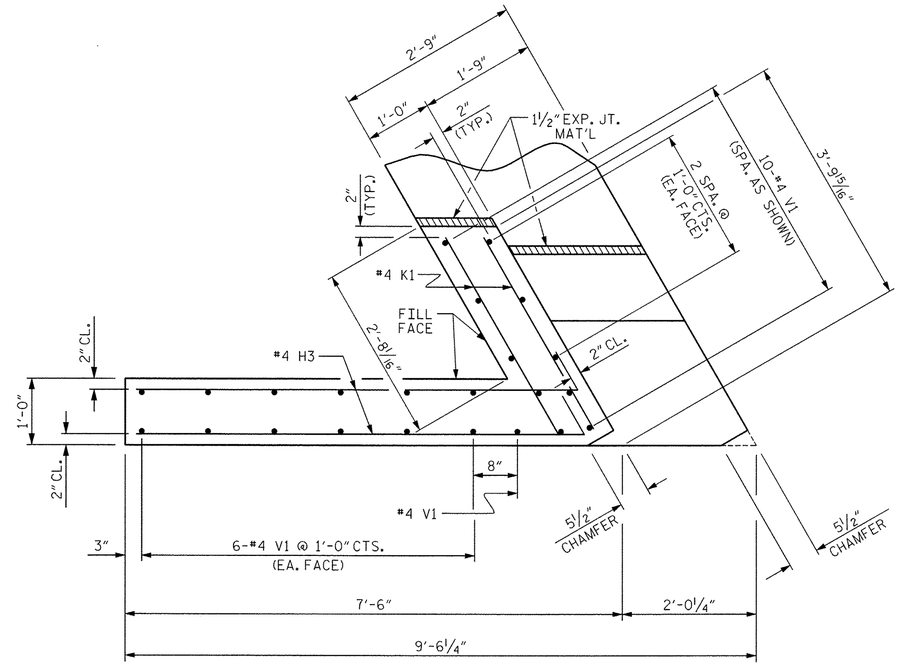

PLAN OF WING (W2)

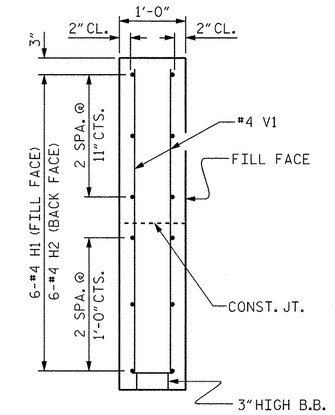

SECTION X-X

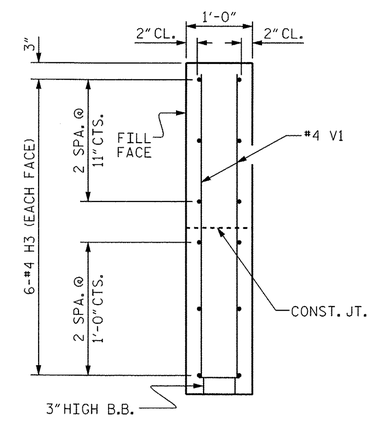

SECTION Y-Y

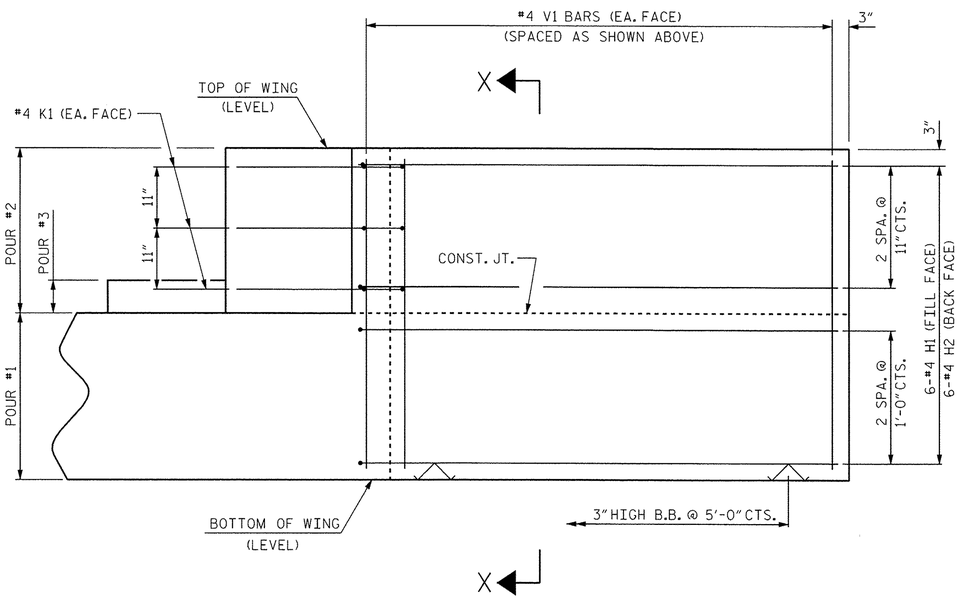

ELEVATION OF WING (W1)

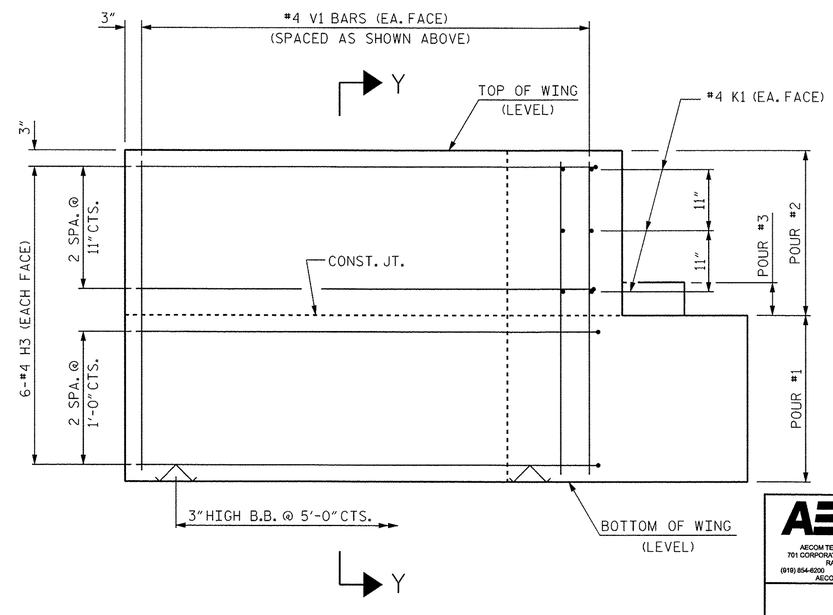

ELEVATION OF WING (W2)

WING DETAILS

PROJECT NO. 17BP.14.R.15

JACKSON COUNTY

STATION: 12+40.00 -L-

SHEET 3 OF 4

AECOM

AECOM TECHNICAL SERVICES, INC.
701 CORPORATE CENTER DRIVE, SUITE 475
RALEIGH, NC 27607
(919) 854-6200 www.aecom.com
AECOM License No. F-0342

NORTH CAROLINA PROFESSIONAL SEAL 030474 ENGINEER JOHN C. MORRISON
2/14/13

STATE OF NORTH CAROLINA
DEPARTMENT OF TRANSPORTATION
RALEIGH

SUBSTRUCTURE
END BENT
WING DETAILS

REVISIONS						SHEET NO.
NO.	BY:	DATE:	NO.	BY:	DATE:	S-16
1			3			TOTAL SHEETS
2			4			

ASSEMBLED BY :	MTB	DATE :	08/12
CHECKED BY :	JCM	DATE :	08/12
DRAWN BY :	DGE	12/09	
CHECKED BY :	MKT	01/10	

STD. NO. EB_27_60S

DATE: 2/13/2013
TIME: 12:48:45 PM

USER: BEUSLEM
DGN: 0160623072-N400_Tech_Info_Disc_Files\450_NCDOT Std Tech Data Files\BRG_300_END BENT Wings.dgn

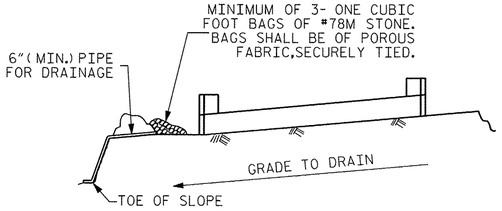

BAGGED STONE AND PIPE SHALL BE PLACED IMMEDIATELY AFTER COMPLETION OF END BENT EXCAVATION. PIPE MAY BE EITHER CONCRETE, CORRUGATED STEEL, CORRUGATED ALUMINUM ALLOY, OR CORRUGATED PLASTIC. PERFORATED PIPE WILL NOT BE ALLOWED.

BAGGED STONE SHALL REMAIN IN PLACE UNTIL THE ENGINEER DIRECTS THAT IT BE REMOVED. THE CONTRACTOR SHALL REMOVE AND DISPOSE OF SILT ACCUMULATIONS AT BAGGED STONE WHEN SO DIRECTED BY THE ENGINEER. BAGS SHALL BE REMOVED AND REPLACED WHENEVER THE ENGINEER DETERMINES THAT THEY HAVE DETERIORATED AND LOST THEIR EFFECTIVENESS.

NO SEPARATE PAYMENT WILL BE MADE FOR THIS WORK AND THE ENTIRE COST OF THIS WORK SHALL BE INCLUDED IN THE UNIT CONTRACT PRICE BID FOR THE SEVERAL PAY ITEMS.

TEMPORARY DRAINAGE AT END BENT

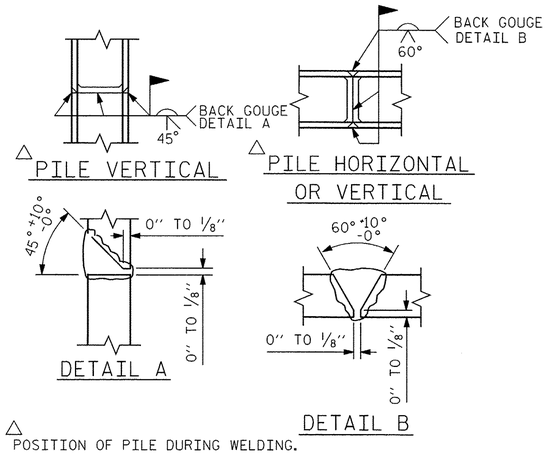

△ POSITION OF PILE DURING WELDING.

PILE SPLICE DETAILS

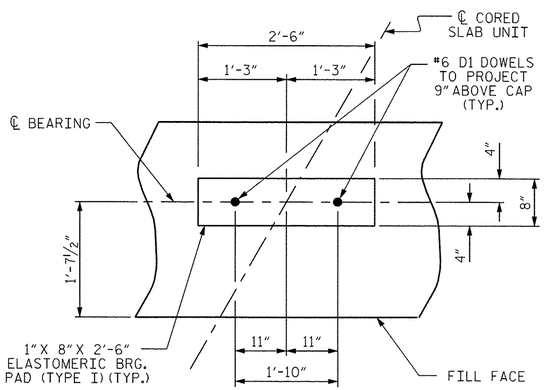

DETAIL "A"

(END BENT No. 1 SHOWN, END BENT No. 2 SIMILAR BY ROTATION)

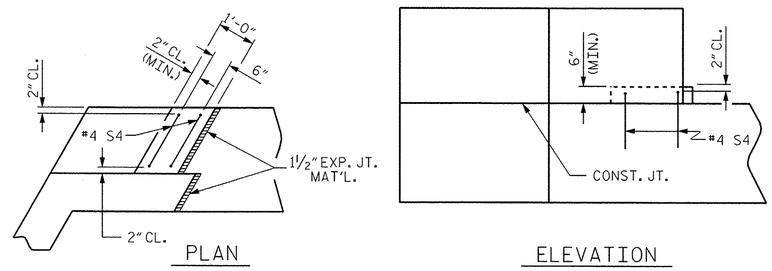

LATERAL GUIDE DETAILS

(END BENT No. 1, LEFT LATERAL GUIDE SHOWN, RIGHT END SIMILAR)
(END BENT No. 2 SIMILAR BY ROTATION)

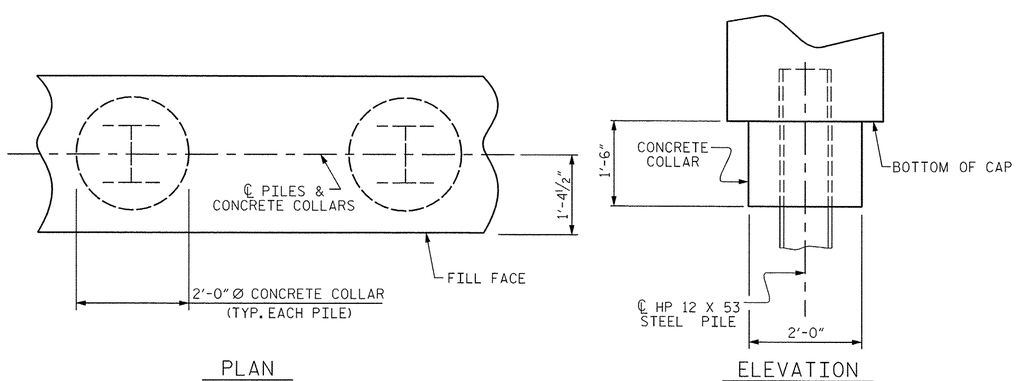

CORROSION PROTECTION FOR STEEL PILES DETAIL

(END BENT No. 1 SHOWN, END BENT No. 2 SIMILAR BY ROTATION)

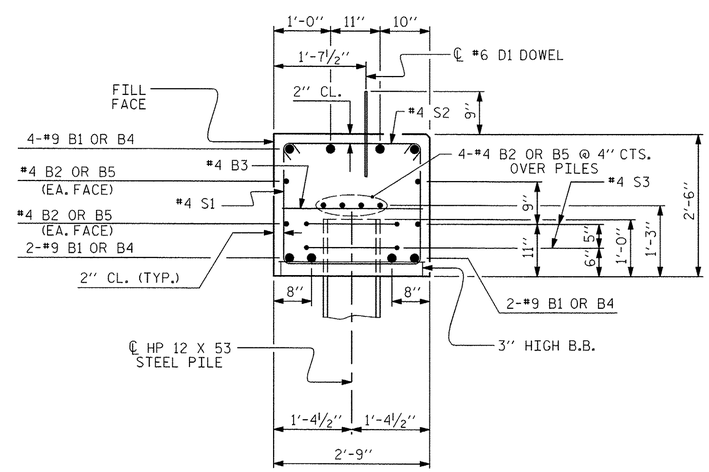

SECTION A-A

(CONCRETE COLLAR NOT SHOWN FOR CLARITY.
SEE "CORROSION PROTECTION FOR STEEL PILES DETAIL.")

BAR TYPES

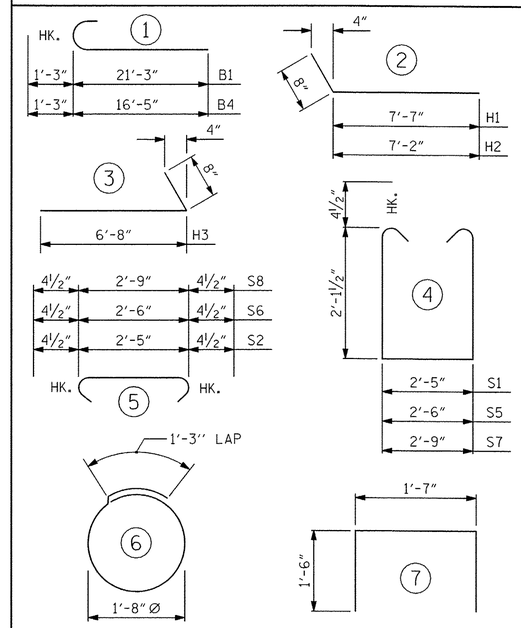

ALL BAR DIMENSIONS ARE OUT TO OUT.

END BENT No. 1	END BENT No. 2
HP 12 X 53 STEEL PILES	HP 12 X 53 STEEL PILES
NO: 5 LIN. FT.= 135	NO: 5 LIN. FT.= 100
STEEL PILE POINTS	STEEL PILE POINTS
NO: 5	NO: 5

BILL OF MATERIAL FOR ONE END BENT

BAR	NO.	SIZE	TYPE	LENGTH	WEIGHT
B1	8	#9	1	22'-6" *	612
B2	8	#4	STR	21'-3" *	114
B3	10	#4	STR	2'-5"	16
B4	8	#9	1	17'-8" *	481
B5	8	#4	STR	16'-5" *	88
D1	18	#6	STR	1'-6"	41
H1	6	#4	2	8'-3"	33
H2	6	#4	2	7'-10"	31
H3	12	#4	3	7'-4"	59
K1	12	#4	STR	3'-3"	26
S1	49	#4	4	7'-5"	243
S2	49	#4	5	3'-2"	104
S3	10	#4	6	6'-6"	43
S4	4	#4	7	4'-7"	12
S5	2	#4	4	7'-6"	10
S6	2	#4	5	3'-3"	4
S7	2	#4	4	7'-9"	10
S8	2	#4	5	3'-6"	5
V1	47	#4	STR	4'-8"	147

REINFORCING STEEL (FOR ONE END BENT) 2079 LBS.

CLASS A CONCRETE BREAKDOWN (FOR ONE END BENT)

POUR #1	CAP, LOWER PART OF WINGS & COLLARS	11.8 C.Y.
POUR #2	UPPER PART OF WINGS	1.9 C.Y.
POUR #3	LATERAL GUIDES	0.1 C.Y.
TOTAL CLASS A CONCRETE		13.8 C.Y.

* MECHANICAL COUPLERS ARE REQUIRED. ADJUST BAR LENGTHS AS NECESSARY FOR THE APPROVED SPLICE MECHANISM USED. FOR MECHANICAL SPLICES, SEE SECTION 425-5(B) OF THE STANDARD SPECIFICATIONS.

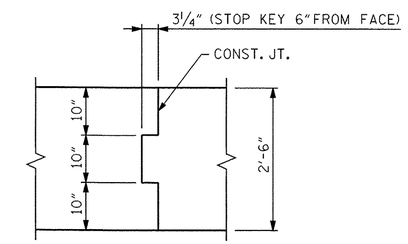

CONST. JT. DETAIL

PROJECT NO. 17BP.14.R.15

JACKSON COUNTY

STATION: 12+40.00 -L-

SHEET 4 OF 4

AECOM
AECOM TECHNICAL SERVICES, INC.
701 CORPORATE CENTER DRIVE, SUITE 475
RALEIGH, NC 27607
(919) 854-6200 www.aecom.com
AECOM License No. F-0342

NORTH CAROLINA PROFESSIONAL SEAL 030474 ENGINEER JOHN C. MORRISON
2/14/13

STATE OF NORTH CAROLINA
DEPARTMENT OF TRANSPORTATION
RALEIGH

SUBSTRUCTURE

END BENT No. 1 & 2 DETAILS

REVISIONS						SHEET NO.
NO.	BY:	DATE:	NO.	BY:	DATE:	S-17
1			3			TOTAL SHEETS
2			4			

STD. NO. EB_27_60S

ASSEMBLED BY :	MTB	DATE :	08/12
CHECKED BY :	JCM	DATE :	08/12
DRAWN BY :	DGE	12/09	
CHECKED BY :	MKT	01/10	

DATE: 2/13/2013
TIME: 12:50:04 PM

USER: BELVSLEM
DGN: 0450258172\400_Tech_Info_Disc_Files\450_NC0073\Textbes\Files\BRG_300_EE\Structure\B300_EndBentDet.dgn

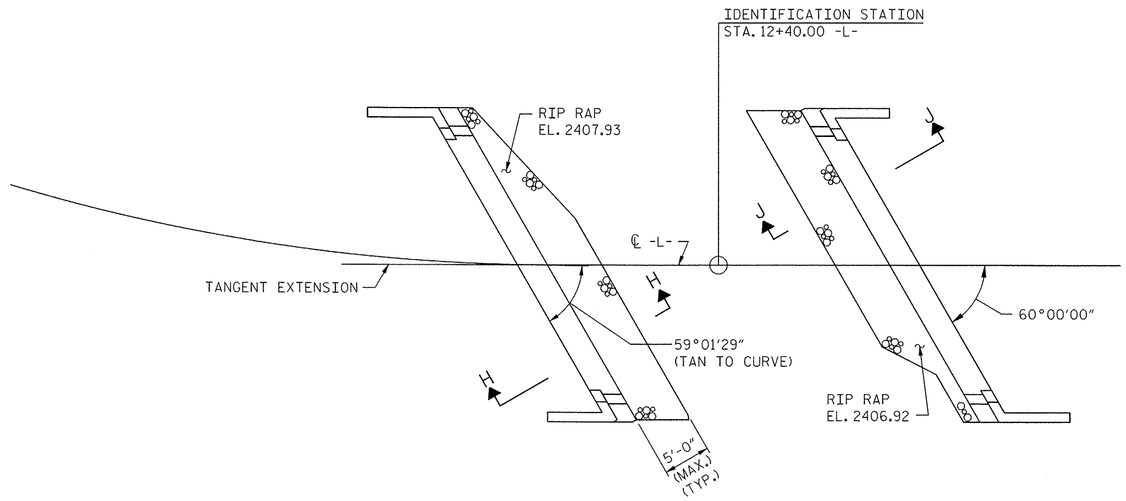

RIP RAP
AT END BENT No. 1

RIP RAP
AT END BENT No. 2

ESTIMATED QUANTITIES		
BRIDGE @ STA. 12+40.00 -L-	RIP RAP CLASS II (2'-0" THICK)	GEOTEXTILE FOR DRAINAGE
	TONS	SQUARE YARDS
END BENT 1	16	18
END BENT 2	16	18

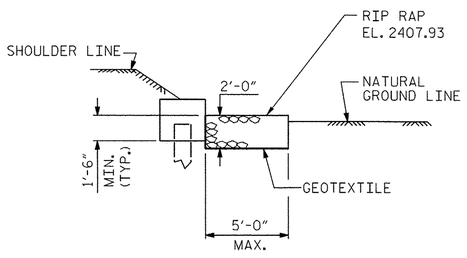

SECTION H-H
℄ SECTION - SIM.

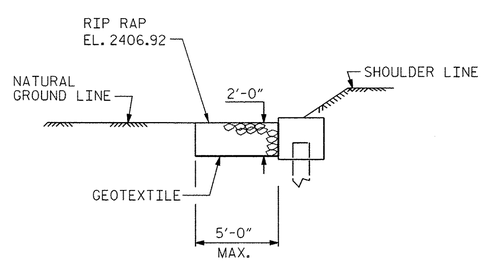

SECTION J-J
℄ SECTION - SIM.

PROJECT NO. 17BP.14.R.15

JACKSON **COUNTY**

STATION: 12+40.00 -L-

AECOM
AECOM TECHNICAL SERVICES, INC.
701 CORPORATE CENTER DRIVE, SUITE 475
RALEIGH, NC 27607
(919) 854-6200 www.aecom.com
AECOM License No. F-0342

NORTH CAROLINA PROFESSIONAL SEAL 030474 ENGINEER JOHN C. MORRISON
2/14/13

STATE OF NORTH CAROLINA
DEPARTMENT OF TRANSPORTATION
RALEIGH

RIP RAP DETAILS

REVISIONS						SHEET NO.
NO.	BY:	DATE:	NO.	BY:	DATE:	S-18
1			3			TOTAL SHEETS
2			4			

DRAWN BY :	MTB	DATE :	08/12
CHECKED BY :	JCM	DATE :	08/12

DATE: 2/13/2013
TIME: 12:53:53 PM
USER: BELUSLEM
DGN: G:\60258172\400_Tech_Info_Disc_Files\450_NCDOT Std Details\Rip Rap\BR6_300_EE Structures\8300_RIprap.dgn

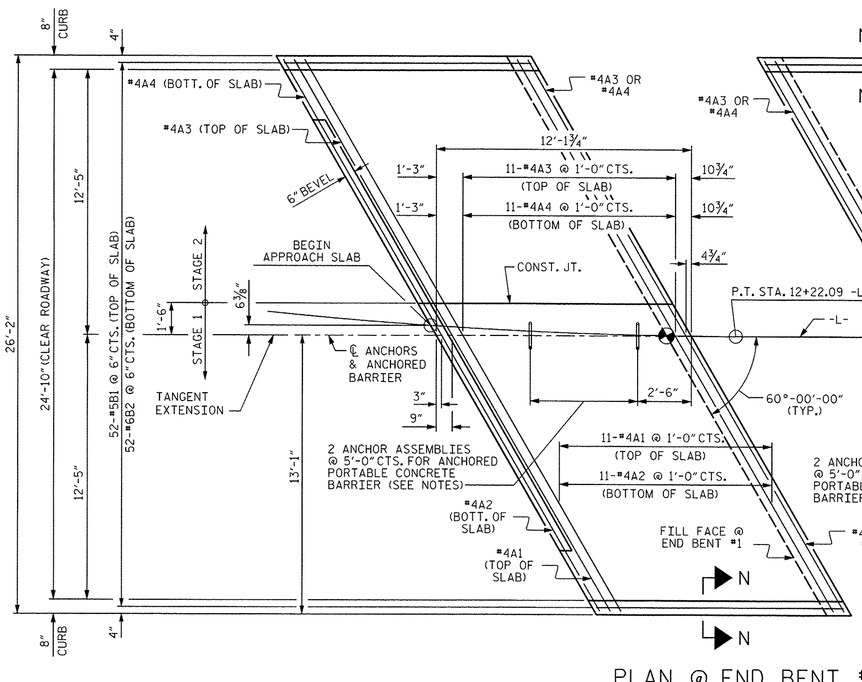

PLAN @ END BENT #1

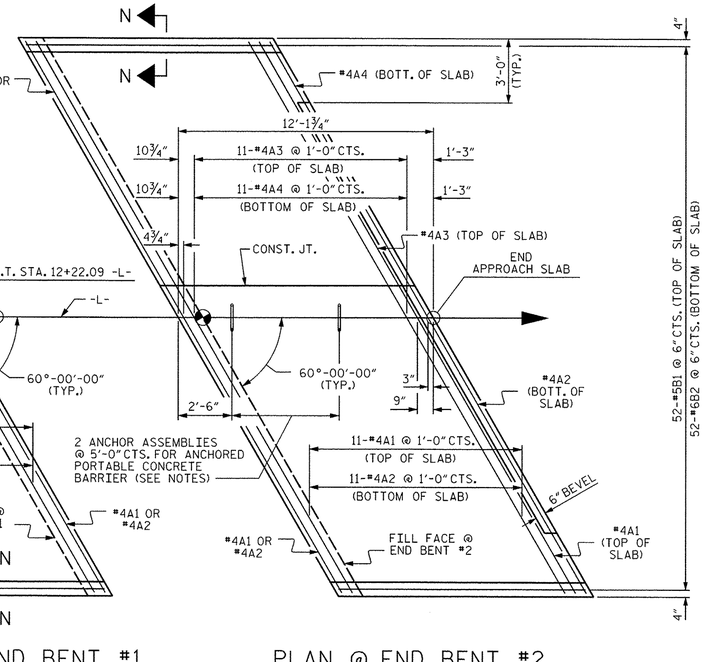

PLAN @ END BENT #2

DIMENSIONS SHOWN ARE TYPICAL FOR BOTH APPROACH SLABS

NOTES

FOR BRIDGE APPROACH FILL INCLUDING GEOTEXTILE, 4" Ø DRAINAGE PIPE, AND #78M STONE BACKFILL, SEE ROADWAY PLANS.

GEOTEXTILE SHALL BE TYPE 1 IN ACCORDANCE WITH THE STANDARD SPECIFICATIONS SECTION 1056.

#78M STONE BACKFILL (CLASS V SELECT MATERIAL) SHALL BE IN ACCORDANCE WITH STANDARD SPECIFICATIONS SECTION 1016.

#78M STONE BACKFILL IS TO BE CONTINUOUS ALONG FILL FACE OF BACKWALL FROM OUTSIDE EDGE TO OUTSIDE EDGE OF APPROACH SLAB.

FOR THE 4" Ø DRAINAGE PIPE OUTLET(S), SEE ROADWAY STANDARD DRAWINGS.

AREA BETWEEN THE WINGWALL AND APPROACH SLAB SHALL BE GRADED TO DRAIN THE WATER AWAY FROM THE FILL FACE OF THE BRIDGE AND SHALL BE PAVED. SEE ROADWAY PLANS.

APPROACH SLAB GROOVING IS NOT REQUIRED.

FOR ANCHOR ASSEMBLY NOTES, SEE SHEET S-08.

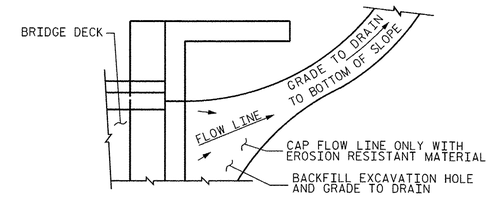

NOTE: IF THE APPROACH SLAB IS NOT CONSTRUCTED IMMEDIATELY AFTER THE BACKFILLING OF THE END BENT EXCAVATION, GRADE TO DRAIN TO THE BOTTOM OF THE SLOPE AND PROVIDE EROSION RESISTANT MATERIAL, SUCH AS FIBERGLASS ROVING OR AS DIRECTED BY THE ENGINEER TO PREVENT SOIL EROSION AND TO PROTECT THE AREA ADJACENT TO THE STRUCTURE. THE CONTRACTOR WILL BE REQUIRED TO REMOVE THESE MATERIALS PRIOR TO CONSTRUCTION OF THE APPROACH SLAB.

TEMPORARY DRAINAGE DETAIL

BILL OF MATERIAL

APPROACH SLAB AT EB #1

BAR	NO.	SIZE	TYPE	LENGTH	WEIGHT
* A1	13	#4	STR	18'-10"	165
A2	13	#4	STR	18'-10"	165
* A3	13	#4	STR	12'-11"	112
A4	13	#4	STR	12'-11"	112
* B1	52	#5	STR	11'-1"	601
B2	52	#6	STR	11'-7"	905
REINFORCING STEEL				LBS.	1182
* EPOXY COATED REINFORCING STEEL				LBS.	878
CLASS AA CONCRETE				C. Y.	15.4

APPROACH SLAB AT EB #2

BAR	NO.	SIZE	TYPE	LENGTH	WEIGHT
* A1	13	#4	STR	**	165
A2	13	#4	STR	**	165
* A3	13	#4	STR	**	112
A4	13	#4	STR	**	112
* B1	52	#5	STR	11'-1"	601
B2	52	#6	STR	11'-7"	905
REINFORCING STEEL				LBS.	1182
* EPOXY COATED REINFORCING STEEL				LBS.	878
CLASS AA CONCRETE				C. Y.	15.4

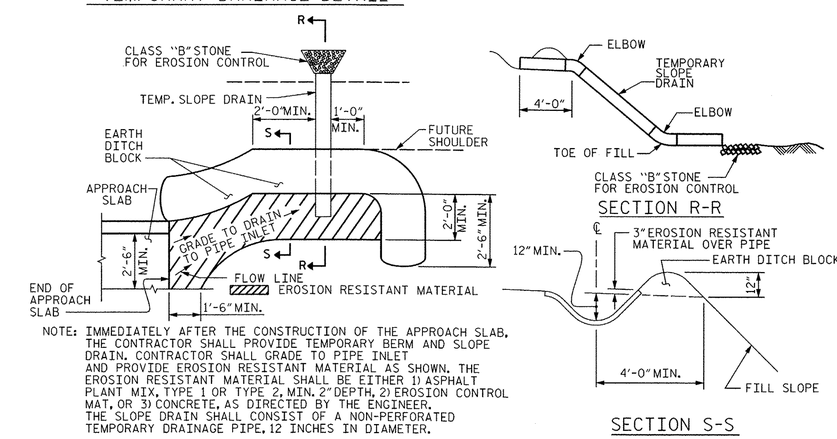

NOTE: IMMEDIATELY AFTER THE CONSTRUCTION OF THE APPROACH SLAB, THE CONTRACTOR SHALL PROVIDE TEMPORARY BERM AND SLOPE DRAIN. CONTRACTOR SHALL GRADE TO PIPE INLET AND PROVIDE EROSION RESISTANT MATERIAL AS SHOWN. THE EROSION RESISTANT MATERIAL SHALL BE EITHER 1) ASPHALT PLANT MIX, TYPE 1 OR TYPE 2, MIN. 2" DEPTH, 2) EROSION CONTROL MAT, OR 3) CONCRETE, AS DIRECTED BY THE ENGINEER. THE SLOPE DRAIN SHALL CONSIST OF A NON-PERFORATED TEMPORARY DRAINAGE PIPE, 12 INCHES IN DIAMETER.

PLAN VIEW

TEMPORARY BERM AND SLOPE DRAIN DETAILS

(TO BE USED WHEN SHOULDER BERM GUTTER IS REQUIRED)

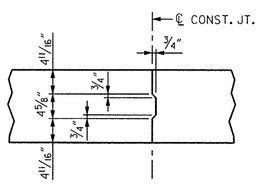

CONSTRUCTION JOINT DETAIL

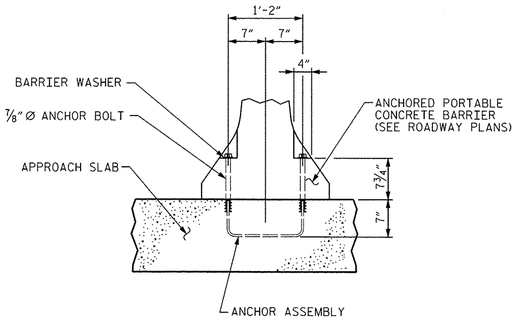

ANCHOR ASSEMBLY PLACEMENT DETAIL

(SHOWING PLACEMENT OF ANCHOR ASSEMBLY)

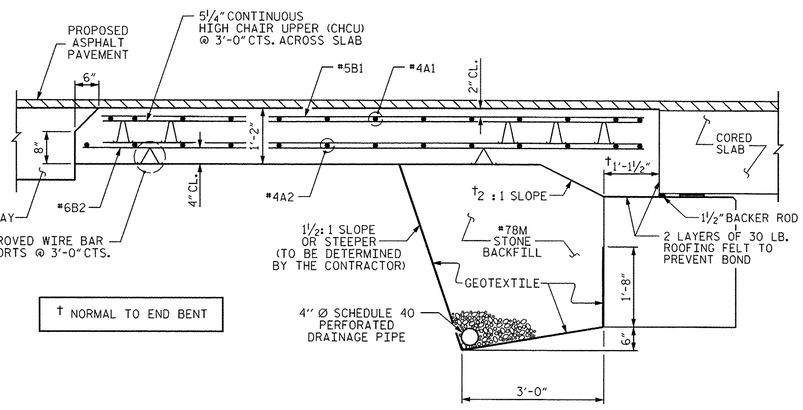

† NORMAL TO END BENT

SECTION THRU SLAB

SPLICE LENGTHS		
BAR SIZE	EPOXY COATED	UNCOATED
#4	2'-0"	1'-9"
#5	2'-6"	2'-2"
#6	3'-10"	2'-7"

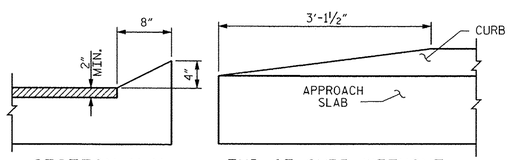

SECTION N-N

END OF CURB WITHOUT SHOULDER BERM GUTTER

CURB DETAILS

PROJECT NO. 17BP.14.R.15

JACKSON COUNTY

STATION: 12+40.00 -L-

AECOM
AECOM TECHNICAL SERVICES, INC.
701 CORPORATE CENTER DRIVE, SUITE 475
RALEIGH, NC 27607
(919) 854-6200 www.aecom.com
AECOM License No. F-0342

NORTH CAROLINA PROFESSIONAL SEAL 030474 ENGINEER JOHN C. MORRISON
2/14/13

STATE OF NORTH CAROLINA
DEPARTMENT OF TRANSPORTATION
RALEIGH

STANDARD
BRIDGE APPROACH SLAB
FOR PRESTRESSED CONCRETE
CORED SLAB UNIT
(SUB-REGIONAL TIER)
60° SKEW

REVISIONS						SHEET NO.
NO.	BY:	DATE:	NO.	BY:	DATE:	S-19
1			3			TOTAL SHEETS
2			4			

ASSEMBLED BY :	MTB	DATE :	08/12
CHECKED BY :	JCM	DATE :	08/12
DRAWN BY : SHS/MAA 5-09		REV. 12-11	MAA/AAC
CHECKED BY : BCH 5-09			

STD. NO. BAS_27_60S

DATE: 2/13/2013
TIME: 12:56:48 PM

USER: REUSSEN
DGN: U:\60625307\2400_Tech_Info_Disc_Files\450_NCDOT Std Tech Data Files\SRG_300_EE\Structures\B300_App Slab.dgn

STANDARD NOTES

DESIGN DATA:

SPECIFICATIONS	A.A.S.H.T.O. (CURRENT)
LIVE LOAD	SEE PLANS
IMPACT ALLOWANCE	SEE A.A.S.H.T.O.
STRESS IN EXTREME FIBER OF	
STRUCTURAL STEEL - AASHTO M270 GRADE 36	20,000 LBS. PER SQ. IN.
- AASHTO M270 GRADE 50W	27,000 LBS. PER SQ. IN.
- AASHTO M270 GRADE 50	27,000 LBS. PER SQ. IN.
REINFORCING STEEL IN TENSION	
GRADE 60	24,000 LBS. PER SQ. IN.
CONCRETE IN COMPRESSION	1,200 LBS. PER SQ. IN.
CONCRETE IN SHEAR	SEE A.A.S.H.T.O.
STRUCTURAL TIMBER - TREATED OR	
UNTREATED - EXTREME FIBER STRESS	1,800 LBS. PER SQ. IN.
COMPRESSION PERPENDICULAR TO GRAIN OF TIMBER	375 LBS. PER SQ. IN.
EQUIVALENT FLUID PRESSURE OF EARTH	30 LBS. PER CU. FT. (MINIMUM)

MATERIAL AND WORKMANSHIP:

EXCEPT AS MAY OTHERWISE BE SPECIFIED ON PLANS OR IN THE SPECIAL PROVISIONS, ALL MATERIAL AND WORKMANSHIP SHALL BE IN ACCORDANCE WITH THE 2012 "STANDARD SPECIFICATIONS FOR ROADS AND STRUCTURES" OF THE N. C. DEPARTMENT OF TRANSPORTATION.

STEEL SHEET PILING FOR PERMANENT OR TEMPORARY APPLICATIONS SHALL BE HOT ROLLED.

CONCRETE:

UNLESS OTHERWISE REQUIRED ON PLANS, CLASS A CONCRETE SHALL BE USED FOR ALL PORTIONS OF ALL STRUCTURES WITH THE EXCEPTION THAT: CLASS AA CONCRETE SHALL BE USED IN BRIDGE SUPERSTRUCTURES, ABUTMENT BACKWALLS, AND APPROACH SLABS; AND CLASS B CONCRETE SHALL BE USED FOR SLOPE PROTECTION AND RIP RAP.

CONCRETE CHAMFERS:

UNLESS OTHERWISE NOTED ON THE PLANS, ALL EXPOSED CORNERS ON STRUCTURES SHALL BE CHAMFERED 3/4" WITH THE FOLLOWING EXCEPTIONS: TOP CORNERS OF CURBS MAY BE ROUNDED TO 1-1/2" RADIUS WHICH IS BUILT INTO CURB FORMS; CORNERS OF TRANSVERSE FLOOR EXPANSION JOINTS SHALL BE ROUNDED WITH A 1/4" FINISHING TOOL UNLESS OTHERWISE REQUIRED ON PLANS; AND CORNERS OF EXPANSION JOINTS IN THE ROADWAY FACES AND TOPS OF CURBS AND SIDEWALKS SHALL BE ROUNDED TO A 1/4" RADIUS WITH A FINISHING STONE OR TOOL UNLESS OTHERWISE REQUIRED ON PLANS.

DOWELS:

DOWELS WHEN INDICATED ON PLANS AS FOR CULVERT EXTENSIONS, SHALL BE EMBEDDED AT LEAST 12" INTO THE OLD CONCRETE AND GROUTED INTO PLACE WITH 1:2 CEMENT MORTAR.

ALLOWANCE FOR DEAD LOAD DEFLECTION, SETTLEMENT, ETC. IN CASTING SUPERSTRUCTURES:

BRIDGES SHALL BE BUILT ON THE GRADE OR VERTICAL CURVE SHOWN ON PLANS. SLABS, CURBS AND PARAPETS SHALL CONFORM TO THE GRADE OR CURVE.

ALL DIMENSIONS WHICH ARE GIVEN IN SECTION AND ARE AFFECTED BY DEAD LOAD DEFLECTIONS ARE DIMENSIONS AT CENTER LINE OF BEARING UNLESS OTHERWISE NOTED ON PLANS. IN SETTING FORMS FOR STEEL BEAM BRIDGES AND PRESTRESSED CONCRETE GIRDER BRIDGES, ADJUSTMENTS SHALL BE MADE DUE TO THE DEAD LOAD DEFLECTIONS FOR THE ELEVATIONS SHOWN. WHERE BLOCKS ARE SHOWN OVER BEAMS FOR BUILDING UP TO THE SLAB, THE VERTICAL DIMENSIONS OF THE BLOCKS SHALL BE ADJUSTED BETWEEN BEARINGS TO COMPENSATE FOR DEAD LOAD DEFLECTIONS, VERTICAL CURVE ORDINATE, AND ACTUAL BEAM CAMBER. WHERE BOTTOM OF SLAB IS IN LINE WITH BOTTOM OF TOP FLANGES, DEPTH OF SLAB BETWEEN BEARINGS SHALL BE ADJUSTED TO COMPENSATE FOR DEAD LOAD DEFLECTION, VERTICAL CURVE ORDINATE, AND ACTUAL BEAM CAMBER.

IN SETTING FALSEWORK AND FORMS FOR REINFORCED CONCRETE SPANS, AN ALLOWANCE SHALL BE MADE FOR DEAD LOAD DEFLECTIONS, SETTLEMENT OF FALSEWORK, AND PERMANENT CAMBER WHICH SHALL BE PROVIDED FOR IN ADDITION TO THE ELEVATIONS SHOWN. AFTER REMOVAL OF THE FALSEWORK, THE FINISHED STRUCTURES SHALL CONFORM TO THE PROFILE AND ELEVATIONS SHOWN ON THE PLANS AND CONSTRUCTION ELEVATIONS FURNISHED BY THE ENGINEER.

DETAILED DRAWINGS FOR FALSEWORK OR FORMS FOR BRIDGE SUPERSTRUCTURE AND ANY STRUCTURE OR PARTS OF A STRUCTURE AS NOTED ON THE PLANS SHALL BE SUBMITTED TO THE ENGINEER FOR APPROVAL BEFORE CONSTRUCTION OF THE FALSEWORK OR FORMS IS STARTED.

REINFORCING STEEL:

ALL REINFORCING STEEL SHALL BE DEFORMED. DIMENSIONS RELATIVE TO PLACEMENT OF REINFORCING ARE TO CENTERS OF BARS UNLESS OTHERWISE INDICATED IN THE PLANS. DIMENSIONS ON BAR DETAILS ARE TO CENTERS OF BARS OR ARE OUT TO OUT AS INDICATED ON PLANS.

WIRE BAR SUPPORTS SHALL BE PROVIDED FOR REINFORCING STEEL WHERE INDICATED ON THE PLANS. WHEN BAR SUPPORT PIECES ARE PLACED IN CONTINUOUS LINES, THEY SHALL BE SO PLACED THAT THE ENDS OF THE SUPPORTING WIRES SHALL BE LAPPED TO LOCK LEGS ON ADJOINING PIECES.

STRUCTURAL STEEL:

AT THE CONTRACTOR'S OPTION, HE MAY SUBSTITUTE 7/8" Ø SHEAR STUDS FOR THE ¾" Ø STUDS SPECIFIED ON THE PLANS. THIS SUBSTITUTION SHALL BE MADE AT THE RATE OF 3 - 7/8" Ø STUDS FOR 4 - 3/4" Ø STUDS, AND STUD SPACING CHANGES SHALL BE MADE AS NECESSARY TO PROVIDE THE SAME EQUIVALENT NUMBER OF 7/8" Ø STUDS ALONG THE BEAM AS SHOWN FOR 3/4" Ø STUDS BASED ON THE RATIO OF 3 - 7/8" Ø STUDS FOR 4 - 3/4" Ø STUDS. STUDS OF THE LENGTH SPECIFIED ON THE PLANS MUST BE PROVIDED. THE MAXIMUM SPACING SHALL BE 2'-0".

EXCEPT AT THE INTERIOR SUPPORTS OF CONTINUOUS BEAMS WHERE THE COVER PLATE IS IN CONTACT WITH BEARING PLATE, THE CONTRACTOR MAY, AT HIS OPTION, SUBSTITUTE FOR THE COVER PLATES DESIGNATED ON THE PLANS COVER PLATES OF THE EQUIVALENT AREA PROVIDED THESE PLATES ARE AT LEAST 5/16" IN THICKNESS AND DO NOT EXCEED A WIDTH EQUAL TO THE FLANGE WIDTH LESS 2" OR A THICKNESS EQUAL TO 2 TIMES THE FLANGE THICKNESS. THE SIZE OF FILLET WELDS SHALL CONFORM TO THE REQUIREMENTS OF THE CURRENT ANSI/AASHTO/AWS "BRIDGE WELDING CODE". ELECTROSLAG WELDING WILL NOT BE PERMITTED.

WITH THE SOLE EXCEPTION OF EDGES AT SURFACES WHICH BEAR ON OTHER SURFACES, ALL SHARP EDGES AND ENDS OF SHAPES AND PLATES SHALL BE SLIGHTLY ROUNDED BY SUITABLE MEANS TO A RADIUS OF APPROXIMATELY 1/16 INCH OR EQUIVALENT FLAT SURFACE AT A SUITABLE ANGLE PRIOR TO PAINTING, GALVANIZING, OR METALLIZING.

HANDRAILS AND POSTS:

METAL STANDARDS AND FACES OF THE CONCRETE END POSTS FOR THE METAL RAIL SHALL BE SET NORMAL TO THE GRADE OF THE CURB, UNLESS OTHERWISE SHOWN ON PLANS. THE METAL RAIL AND TOPS OF CONCRETE POSTS USED WITH THE ALUMINUM RAIL SHALL BE BUILT PARALLEL TO THE GRADE OF THE CURB.

METAL HANDRAILS SHALL BE IN ACCORDANCE WITH THE PLANS. RAILS SHALL BE AS MANUFACTURED FOR BRIDGE RAILING. CASTINGS SHALL BE OF A UNIFORM APPEARANCE. FINS AND OTHER DEFORMATIONS RESULTING FROM CASTING OR OTHERWISE SHALL BE REMOVED IN A MANNER SO THAT A UNIFORM COLORING OF THE COMPLETED CASTING SHALL BE OBTAINED. CASTINGS WITH DISCOLORATIONS OR OF NON-UNIFORM COLORING WILL NOT BE ACCEPTED. CERTIFIED MILL REPORTS ARE REQUIRED FOR METAL RAILS AND POSTS.

SPECIAL NOTES:

GENERALLY, IN CASE OF DISCREPANCY, THIS STANDARD SHEET OF NOTES SHALL GOVERN OVER THE SPECIFICATIONS, BUT THE REMAINDER OF THE PLANS SHALL GOVERN OVER NOTES HEREON, AND SPECIAL PROVISIONS SHALL GOVERN OVER ALL. SEE SPECIFICATIONS ARTICLE 105-4.

ENGLISH

JANUARY, 1990

USER: BELISLEM DATE: 2/13/2013
DGN: 0560258T12v400_Tech_Info_Dist_Files\450_NCDOT Std Tech Doc Files\BRG_300_LE\Structures\B300_StdNotes.dgn TIME: 12:58:44 PM