STATE	STATE PROJECT REFERENCE NO.	SHEET NO.	TOTAL SHEETS
N.C.	17BP.14.R.39	1	

STATE PROJ. NO.	F. A. PROJ. NO.	DESCRIPTION
17BP.14.R.39		

STATE OF NORTH CAROLINA
DIVISION OF HIGHWAYS

HAYWOOD COUNTY

PROJECT: 17BP.14.R.39

CONTRACT: DN00172

FINAL PLANS

See Sheet 1A For Index of Sheets
See Sheet 1B For Conventional Symbols

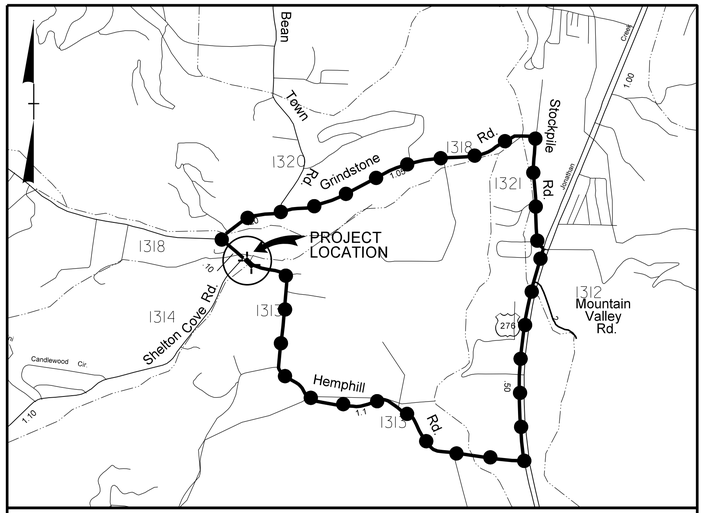

VICINITY MAP ***NTS***

OFF–SITE DETOUR

LOCATION: BRIDGE NO. 162 ON SR 1313 OVER BRANCH OF JONATHAN CREEK

TYPE OF WORK: GRADING, PAVING, DRAINAGE, SIGNING, AND STRUCTURE

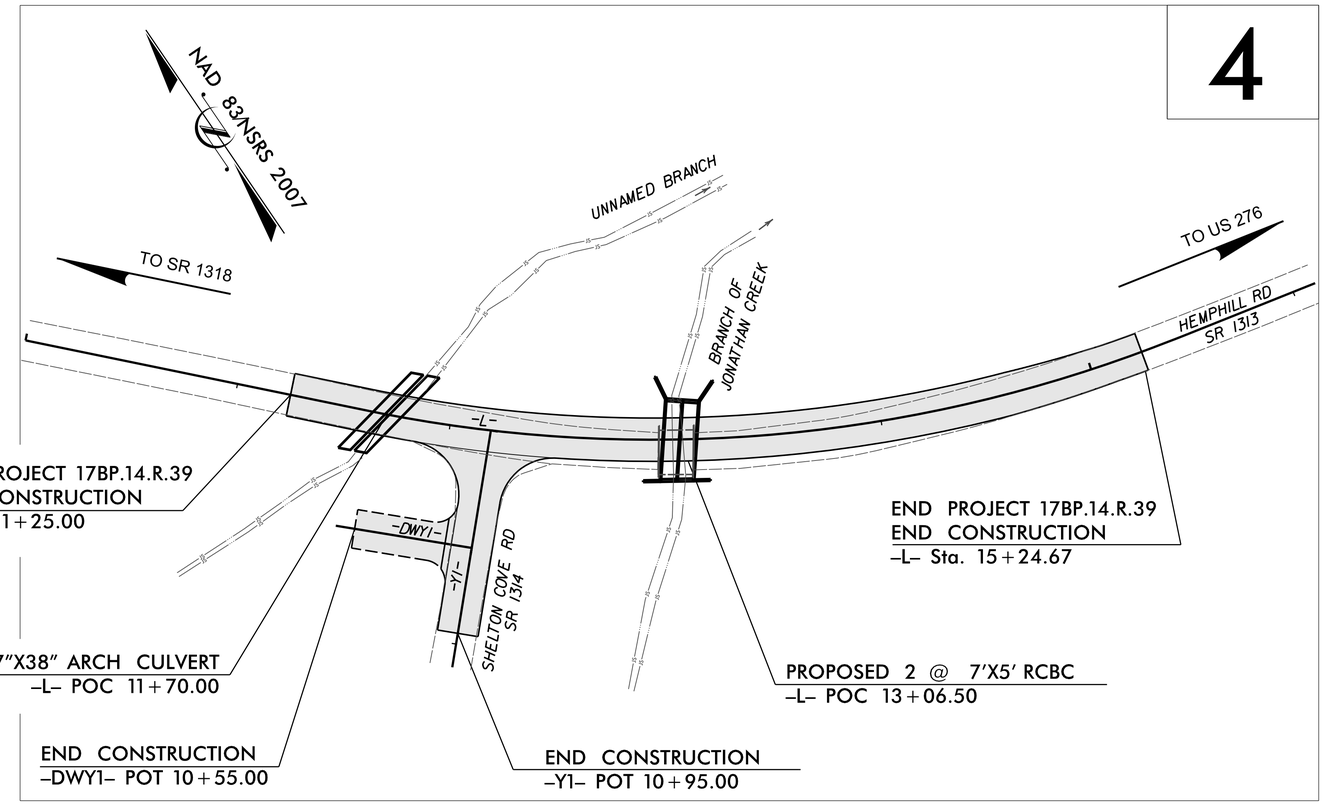

NCDOT CONTACT:
JOSH DEYTON, PE
HIGHWAY DIVISION 14
BRIDGE MANAGER
828–488–0902

GRAPHIC SCALES

20 10 0 20 40
PLANS

20 10 0 20 40
PROFILE (HORIZONTAL)

4 2 0 4 8
PROFILE (VERTICAL)

DESIGN DATA

ADT 2009 = 2000
ADT =
DHV = %
D = %
T = % *
V = 35 MPH
* TTST = DUAL
FUNC CLASS = LOCAL

SUBREGIONAL TIER

PROJECT LENGTH

LENGTH ROADWAY PROJECT	=	0.076 MILES
LENGTH STRUCTURES PROJECT	=	0.000 MILES
TOTAL LENGTH PROJECT	=	0.076 MILES

Prepared In the Office of:
THE LOUIS BERGER GROUP, Inc.
1001 Wade Avenue, Suite 400
Raleigh, North Carolina 27605
License No.: F-0840

2012 STANDARD SPECIFICATIONS

RIGHT OF WAY DATE:
April 16, 2012

LETTING DATE:
June 25, 2013

DEAN D. HATFIELD, PE
PROJECT ENGINEER

WILLIAM E. TILLITT, PE
PROJECT DESIGN ENGINEER

HYDRAULICS ENGINEER

NORTH CAROLINA PROFESSIONAL SEAL 27876 ENGINEER DIANA STANCELL

P.E.

SIGNATURE:

ROADWAY DESIGN ENGINEER

NORTH CAROLINA PROFESSIONAL SEAL 16003 ENGINEER DEAN D. HATFIELD

P.E.

SIGNATURE:

DIVISION OF HIGHWAYS
STATE OF NORTH CAROLINA

STATE OF NORTH CAROLINA • DEPARTMENT OF TRANSPORTATION

P.E.

STATE HIGHWAY DESIGN ENGINEER

6/5/2013 1:57:59 PM
G:\DR Projects\DR1100 - NCDOT Group W\430162\Roadway\Proj\430162_RDY_00_TSH.dgn
G:\CADD\Plot\DR1100\1100-rdy.tbl

PROJECT REFERENCE NO.	SHEET NO.
17BP.14.R.39	1A

ROADWAY DESIGN ENGINEER

NORTH CAROLINA PROFESSIONAL SEAL 16003 ENGINEER BRIAN D. HATFIELD

REGISTERED ENGINEER
5/29/2013

STATE OF NORTH CAROLINA
DIVISION OF HIGHWAYS

INDEX OF SHEETS

INDEX OF SHEETS

SHEET NUMBER	SHEET
1	TITLE SHEET
1-A	INDEX OF SHEETS, GENERAL NOTES, AND LIST OF STANDARD DRAWINGS
1-B	CONVENTIONAL SYMBOLS
1-C	SURVEY CONTROL
2	PAVEMENT SCHEDULE, TYPICAL SECTIONS, AND WEDGING DETAILS
2A	CONCRETE ENDWALL DETAILS FOR DOUBLE PIPE CULVERT
3	SUMMARY OF QUANTITIES
3A	SUMMARIES OF EARTHWORK, GUARDRAIL, SHOULDER BERM GUTTER & DRAINAGE QUANTITIES
4	PLAN SHEET
5	PROFILE SHEET
TMP-1 THRU TMP-2B	TRAFFIC CONTROL PLANS
PMP-1 THRU PMP-2	PAVEMENT MARKING PLANS
EC-1 THRU EC-5	EROSION CONTROL PLANS
UO-1 THRU UO-5	UTLITIES BY OTHERS PLANS
X-1 THRU X-11	CROSS-SECTIONS
C-1 THRU C-7	CULVERT PLANS

GENERAL NOTES

GENERAL NOTES:

2012 SPECIFICATIONS
EFFECTIVE: 01-17-12
REVISED: 11/01/11

GRADING AND SURFACING OR RESURFACING AND WIDENING:

THE GRADE LINES SHOWN DENOTE THE FINISHED ELEVATION OF THE PROPOSED SURFACING AT GRADE POINTS SHOWN ON THE TYPICAL SECTIONS. WHERE NO GRADE LINES ARE SHOWN, THE PROFILES SHOWN DENOTE THE TOP ELEVATION OF THE EXISTING PAVEMENT ALONG THE CENTER LINE OF SURVEY ON WHICH THE PROPOSED RESURFACING WILL BE PLACED. GRADE LINES MAY BE ADJUSTED BY THE ENGINEER IN ORDER TO SECURE A PROPER TIE-IN.

CLEARING:

CLEARING ON THIS PROJECT SHALL BE PERFORMED TO THE LIMITS ESTABLISHED BY METHOD II.

SUPERELEVATION:

ALL CURVES ON THIS PROJECT SHALL BE SUPERELEVATED IN ACCORDANCE WITH STD. NO. 225.04 USING THE RATE OF SUPERELEVATION AND RUNOFF SHOWN ON THE PLANS. SUPERELEVATION IS TO BE REVOLVED ABOUT THE GRADE POINTS SHOWN ON THE TYPICAL SECTIONS.

SHOULDER CONSTRUCTION:

ASPHALT, EARTH, AND CONCRETE SHOULDER CONSTRUCTION ON THE HIGH SIDE OF SUPERELEVATED CURVES SHALL BE IN ACCORDANCE WITH STD. NO. 560.01.

SIDE ROADS:

THE CONTRACTOR WILL BE REQUIRED TO DO ALL NECESSARY WORK TO PROVIDE SUITABLE CONNECTIONS WITH ALL ROADS, STREETS, AND DRIVES ENTERING THIS PROJECT. THIS WORK WILL BE PAID FOR AT THE CONTRACT UNIT PRICE FOR THE PARTICULAR ITEMS INVOLVED.

DRIVEWAYS:

DRIVEWAYS SHALL BE CONSTRUCTED IN ACCORDANCE WITH STD. 848.02 USING 3' RADII OR RADII AS SHOWN ON THE PLANS. LOCATIONS OF DRIVES WILL BE AS SHOWN ON THE PLANS OR AS DIRECTED BY THE ENGINEER.

GUARDRAIL:

THE GUARDRAIL LOCATIONS SHOWN ON THE PLANS MAY BE ADJUSTED DURING CONSTRUCTION AS DIRECTED BY THE ENGINEER. THE CONTRACTOR SHOULD CONSULT WITH THE ENGINEER PRIOR TO ORDERING GUARDRAIL MATERIAL.

TEMPORARY SHORING:

SHORING REQUIRED FOR THE MAINTENANCE OF TRAFFIC WILL BE PAID FOR AS "EXTRA WORK" IN ACCORDANCE WITH SECTION 104-7.

UTILITIES:

UTILITY OWNERS ON THIS PROJECT ARE

AT&T, HAYWOOD EMC, CAROLINA MOUNTAIN CABLEVISION

ANY RELOCATION OF EXISTING UTILITIES WILL BE ACCOMPLISHED BY OTHERS.

ROADWAY ENGLISH STANDARD DRAWINGS

2012 ROADWAY ENGLISH STANDARD DRAWINGS

The following Roadway Standards as appear in "Roadway Standard Drawings" Highway Design Branch - N. C. Department of Transportation - Raleigh, N. C., Dated January, 2012 are applicable to this project and by reference hereby are considered a part of these plans:

STD.NO.	TITLE
DIVISION 2 - EARTHWORK	
200.02	Method of Clearing - Method II
225.02	Guide for Grading Subgrade - Secondary and Local
225.04	Method of Obtaining Superelevation - Two Lane Pavement
225.06	Method of Grading Sight Distance at Intersections
DIVISION 3 - PIPE CULVERTS	
300.01	Method of Pipe Installation
310.10	Driveway Pipe Construction
DIVISION 5 - SUBGRADE, BASES AND SHOULDERS	
560.01	Method of Shoulder Construction - High Side of Superelevated Curve - Method I
DIVISION 8 - INCIDENTALS	
840.71	Concrete and Brick Pipe Plug
862.01	Guardrail Placement
862.02	Guardrail Installation
876.01	Rip Rap in Channels
876.02	Guide for Rip Rap at Pipe Outlets

5/29/2013 2:01:58 PM
$PENTBL1$
G:\OR Projects\ORI100 - NCDOT Group W\430162\Roadway\Proj\430162_RDY_01A.dgn

PROJECT REFERENCE NO.	SHEET NO.
17BPJ4.R.39	1B

Note: Not to Scale

**S.U.E. = Subsurface Utility Engineering*

STATE OF NORTH CAROLINA
DIVISION OF HIGHWAYS

CONVENTIONAL PLAN SHEET SYMBOLS

BOUNDARIES AND PROPERTY:

- State Line
- County Line
- Township Line
- City Line
- Reservation Line
- Property Line
- Existing Iron Pin — EIP
- Property Corner
- Property Monument — ECM
- Parcel/Sequence Number — 123
- Existing Fence Line
- Proposed Woven Wire Fence
- Proposed Chain Link Fence
- Proposed Barbed Wire Fence
- Existing Wetland Boundary — WLB
- Proposed Wetland Boundary — WLB
- Existing Endangered Animal Boundary — EAB
- Existing Endangered Plant Boundary — EPB
- Known Soil Contamination: Area or Site
- Potential Soil Contamination: Area or Site

BUILDINGS AND OTHER CULTURE:

- Gas Pump Vent or U/G Tank Cap
- Sign — S
- Well — W
- Small Mine
- Foundation
- Area Outline
- Cemetery
- Building
- School
- Church
- Dam

HYDROLOGY:

- Stream or Body of Water
- Hydro, Pool or Reservoir
- Jurisdictional Stream — JS
- Buffer Zone 1 — BZ 1
- Buffer Zone 2 — BZ 2
- Flow Arrow
- Disappearing Stream
- Spring
- Wetland
- Proposed Lateral, Tail, Head Ditch — FLOW
- False Sump

RAILROADS:

- Standard Gauge — CSX TRANSPORTATION
- RR Signal Milepost — MILEPOST 35
- Switch — SWITCH
- RR Abandoned
- RR Dismantled

RIGHT OF WAY:

- Baseline Control Point
- Existing Right of Way Marker
- Existing Right of Way Line
- Proposed Right of Way Line — RW
- Proposed Right of Way Line with Iron Pin and Cap Marker — RW
- Proposed Right of Way Line with Concrete or Granite Marker — RW
- Existing Control of Access — CA
- Proposed Control of Access — CA
- Existing Easement Line — E
- Proposed Temporary Construction Easement — E
- Proposed Temporary Drainage Easement — TDE
- Proposed Permanent Drainage Easement — PDE
- Proposed Permanent Drainage / Utility Easement — DUE
- Proposed Permanent Utility Easement — PUE
- Proposed Temporary Utility Easement — TUE
- Proposed Aerial Utility Easement — AUE
- Proposed Permanent Easement with Iron Pin and Cap Marker

ROADS AND RELATED FEATURES:

- Existing Edge of Pavement
- Existing Curb
- Proposed Slope Stakes Cut — C
- Proposed Slope Stakes Fill — F
- Proposed Curb Ramp — CR
- Existing Metal Guardrail
- Proposed Guardrail
- Existing Cable Guiderail
- Proposed Cable Guiderail
- Equality Symbol
- Pavement Removal

VEGETATION:

- Single Tree
- Single Shrub
- Hedge
- Woods Line
- Orchard
- Vineyard — Vineyard

EXISTING STRUCTURES:

MAJOR:

- Bridge, Tunnel or Box Culvert — CONC
- Bridge Wing Wall, Head Wall and End Wall — CONC WW

MINOR:

- Head and End Wall — CONC HW
- Pipe Culvert
- Footbridge
- Drainage Box: Catch Basin, DI or JB — CB
- Paved Ditch Gutter
- Storm Sewer Manhole — S
- Storm Sewer — S

UTILITIES:

POWER:

- Existing Power Pole
- Proposed Power Pole
- Existing Joint Use Pole
- Proposed Joint Use Pole
- Power Manhole — P
- Power Line Tower
- Power Transformer
- U/G Power Cable Hand Hole
- H-Frame Pole
- Recorded U/G Power Line — P
- Designated U/G Power Line (S.U.E.*) — P

TELEPHONE:

- Existing Telephone Pole
- Proposed Telephone Pole
- Telephone Manhole — T
- Telephone Booth
- Telephone Pedestal — T
- Telephone Cell Tower
- U/G Telephone Cable Hand Hole — HH
- Recorded U/G Telephone Cable — T
- Designated U/G Telephone Cable (S.U.E.*) — T
- Recorded U/G Telephone Conduit — TC
- Designated U/G Telephone Conduit (S.U.E.*) — TC
- Recorded U/G Fiber Optics Cable — T FO
- Designated U/G Fiber Optics Cable (S.U.E.*) — T FO

WATER:

- Water Manhole — W
- Water Meter
- Water Valve
- Water Hydrant
- Recorded U/G Water Line
- Designated U/G Water Line (S.U.E.*)
- Above Ground Water Line — A/G Water

TV:

- TV Satellite Dish
- TV Pedestal — C
- TV Tower
- U/G TV Cable Hand Hole — HH
- Recorded U/G TV Cable — TV
- Designated U/G TV Cable (S.U.E.*) — TV
- Recorded U/G Fiber Optic Cable — TV FO
- Designated U/G Fiber Optic Cable (S.U.E.*) — TV FO

GAS:

- Gas Valve
- Gas Meter
- Recorded U/G Gas Line — G
- Designated U/G Gas Line (S.U.E.*) — G
- Above Ground Gas Line — A/G Gas

SANITARY SEWER:

- Sanitary Sewer Manhole
- Sanitary Sewer Cleanout
- U/G Sanitary Sewer Line — SS
- Above Ground Sanitary Sewer — A/G Sanitary Sewer
- Recorded SS Forced Main Line — FSS
- Designated SS Forced Main Line (S.U.E.*) — FSS

MISCELLANEOUS:

- Utility Pole
- Utility Pole with Base
- Utility Located Object
- Utility Traffic Signal Box — S
- Utility Unknown U/G Line — ?UTL
- U/G Tank; Water, Gas, Oil
- Underground Storage Tank, Approx. Loc. — UST
- A/G Tank; Water, Gas, Oil
- Geoenvironmental Boring
- U/G Test Hole (S.U.E.*)
- Abandoned According to Utility Records — AATUR
- End of Information — E.O.I.

04/16/11

2/18/2013 7:35:24 AM
$PENTBLL$
G:\OR Projects\ORIIOO - NCDOT Group W\430162\Roadway\Proj\430162_RDY_01_IB.dgn

PROJECT REFERENCE NO.	SHEET NO.
17BP.14.R.39	1C
Location and Surveys	

SURVEY CONTROL SHEET 43–0162

–FINAL–

BL

POINT	DESC.	NORTH	EAST	ELEVATION	L STATION	OFFSET
1	BL1	683789.3679	800226.6741	2681.61	10+10.46	12.71 LT
2	BL2	683556.5810	800434.5890	2677.32	13+19.13	19.67 RT
3	BL3	683461.9403	800714.7229	2673.15	16+10.79	12.87 RT

****
BM1 ELEVATION = 2678.77
N 683585 E 800376
BL STATION 7+52.00 25 RIGHT
RR SPIKE IN 20" DBL MAPLE
****

-FINAL- PUE MARKER IRON PIN AND CAP-E

ALIGN	STATION	OFFSET	NORTH	EAST
L	11+02.11	-10.00	683721.7154	800288.5648
L	11+02.30	-35.00	683738.9919	800306.6357
L	11+86.05	-37.00	683681.5577	800365.7503
L	12+05.81	-38.00	683669.6216	800380.0753
L	12+85.00	-44.00	683628.1333	800441.8221
L	13+30.00	-43.00	683604.4059	800476.4680
L	13+88.67	-38.00	683573.7966	800522.4305
L	13+88.93	-25.00	683561.9919	800516.9797

-FINAL- ROW MARKER IRON PIN AND CAP-E

ALIGN	STATION	OFFSET	NORTH	EAST
L	11+25.00	-10.00	683705.2909	800304.5080
L	11+25.00	-25.00	683715.7386	800315.2711
L	11+62.17	-25.00	683689.0665	800341.1615
L	15+24.67	-25.00	683517.6877	800639.4923
L	15+24.67	-10.00	683503.1269	800635.8891
L	15+24.67	10.00	683483.7125	800631.0849
L	15+24.67	20.00	683474.0053	800628.6827
L	12+54.19	20.00	683594.5586	800379.5271
L	11+25.00	25.00	683680.9129	800279.3939
L	11+25.00	10.00	683691.3606	800290.1571

-FINAL- ROW MARKER IRON PIN AND CAP-E

ALIGN	STATION	OFFSET	NORTH	EAST
Y1	10+40.00	30.00	683624.2789	800315.2689

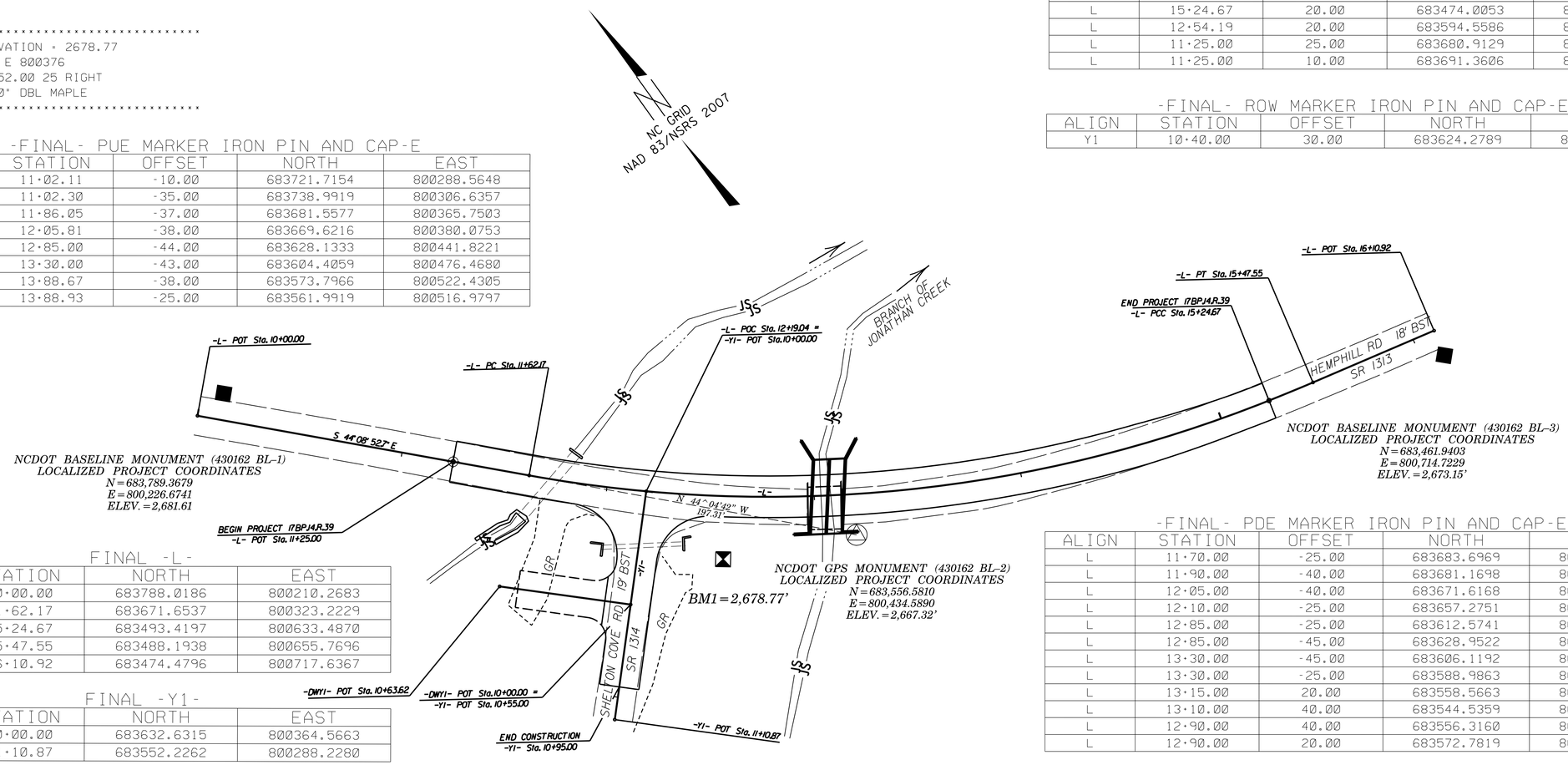

FINAL -L-

TYPE	STATION	NORTH	EAST
POT	10+00.00	683788.0186	800210.2683
PC	11+62.17	683671.6537	800323.2229
PCC	15+24.67	683493.4197	800633.4870
PT	15+47.55	683488.1938	800655.7696
POT	16+10.92	683474.4796	800717.6367

FINAL -Y1-

TYPE	STATION	NORTH	EAST
POT	10+00.00	683632.6315	800364.5663
POT	11+10.87	683552.2262	800288.2280

-FINAL- PDE MARKER IRON PIN AND CAP-E

ALIGN	STATION	OFFSET	NORTH	EAST
L	11+70.00	-25.00	683683.6969	800346.4369
L	11+90.00	-40.00	683681.1698	800370.5104
L	12+05.00	-40.00	683671.6168	800380.8492
L	12+10.00	-25.00	683657.2751	800374.3781
L	12+85.00	-25.00	683612.5741	800430.9174
L	12+85.00	-45.00	683628.9522	800442.3961
L	13+30.00	-45.00	683606.1192	800477.4998
L	13+30.00	-25.00	683588.9863	800467.1816
L	13+15.00	20.00	683558.5663	800430.8138
L	13+10.00	40.00	683544.5359	800415.6316
L	12+90.00	40.00	683556.3160	800397.9698
L	12+90.00	20.00	683572.7819	800409.3222

DATUM DESCRIPTION

THE LOCALIZED COORDINATE SYSTEM DEVELOPED FOR THIS PROJECT IS BASED ON THE STATE PLANE COORDINATES ESTABLISHED BY NCDOT FOR MONUMENT "430162 (BL-2)"
WITH NAD 83/NSRS 2007 STATE PLANE GRID COORDINATES OF
NORTHING: 683556.5810(ft) EASTING: 800434.5890(ft)
ELEVATION: 2677.32(ft)
THE AVERAGE COMBINED GRID FACTOR USED ON THIS PROJECT (GROUND TO GRID) IS: 0.999763668
THE N.C. LAMBERT GRID BEARING AND LOCALIZED HORIZONTAL GROUND DISTANCE FROM "430162 (BL-2)" TO -L- STATION 11+25.00 IS
N 44°04'42" W 197.31'
ALL LINEAR DIMENSIONS ARE LOCALIZED HORIZONTAL DISTANCES
VERTICAL DATUM USED IS NAVD 88

GEOID MODEL – G09NC
NOTE: DRAWING NOT TO SCALE

NOTES:

1. *THE CONTROL DATA FOR THIS PROJECT CAN BE FOUND ELECTRONICALLY BY SELECTING PROJECT CONTROL DATA AT:*
HTTPS://CONNECT.NCDOT.GOV/RESOURCES/LOCATION/

THE FILES TO BE FOUND ARE AS FOLLOWS:
430162_LS_CONTROL_.TXT

SITE CALIBRATION INFORMATION HAS NOT BEEN PROVIDED FOR THIS PROJECT. IF FURTHER INFORMATION IS NEEDED, PLEASE CONTACT THE LOCATION AND SURVEYS UNIT.

INDICATES GEODETIC CONTROL MONUMENTS USED OR SET FOR HORIZONTAL PROJECT CONTROL BY THE NCDOT LOCATION AND SURVEYS UNIT.

PROJECT CONTROL ESTABLISHED USING GLOBAL POSITIONING SYSTEM.

6/2/99

$$$$$SYSTIME$$$$$
$$$$$LOGIN$$$$$
$$$$$USERNAME$$$$$

PROJECT REFERENCE NO.	SHEET NO.
17BP.14.R.39	2
R/W SHEET NO.	
ROADWAY DESIGN ENGINEER	PAVEMENT DESIGN ENGINEER

NORTH CAROLINA PROFESSIONAL SEAL 16003 ENGINEER DIAN D. HAYES

REGISTERED ENGINEER 2/18/2013

N.T.S

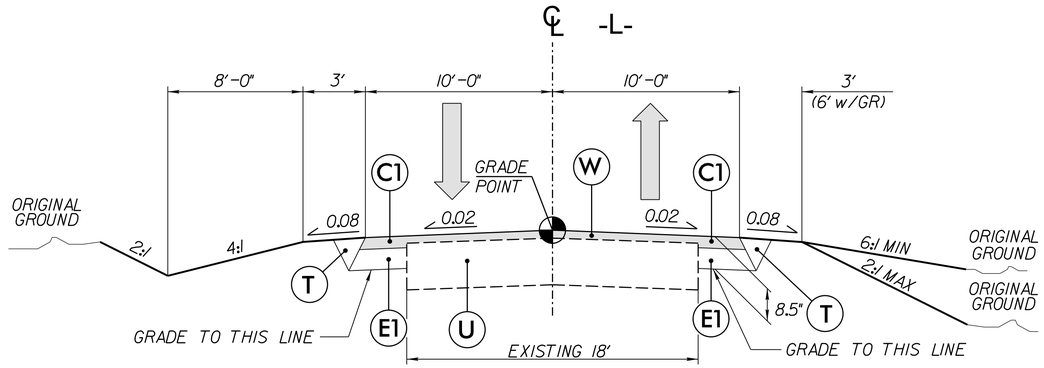

TYPICAL SECTION No. 1

–L– STA 11+25.00 TO –L– STA 12+30.00
–L– STA 14+20.00 TO –L– STA 15+24.67

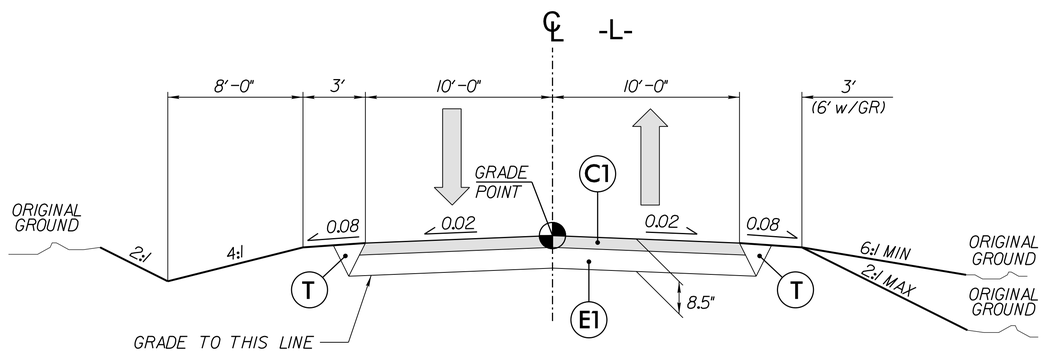

TYPICAL SECTION No. 2

–L– STA 12+30.00 TO –L– STA 14+20.00

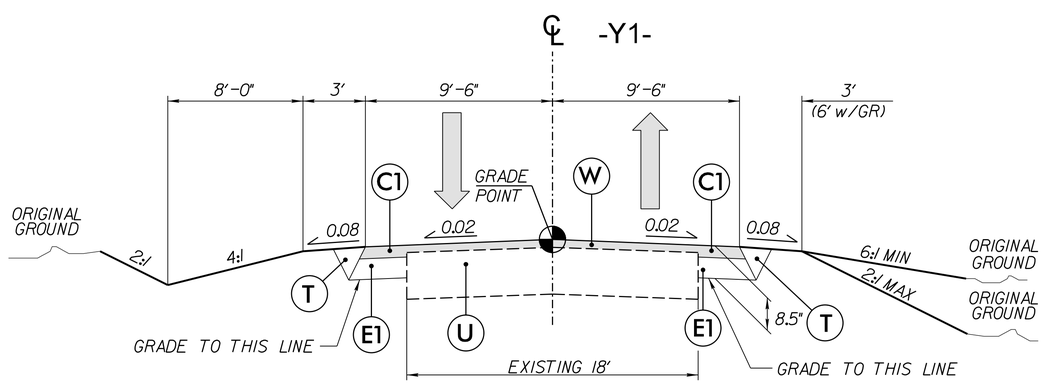

TYPICAL SECTION No. 3

–Y1– STA 10+10.00 TO –Y1– STA 10+95.00

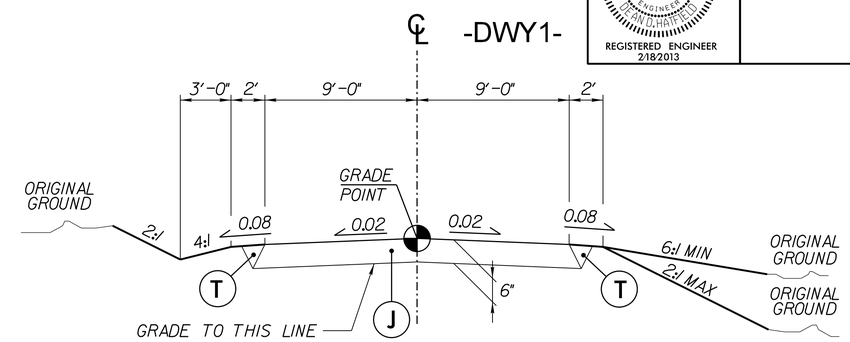

TYPICAL SECTION No. 4

–DWY1– STA 10+10.00 TO –DWY1– STA 10+55.00

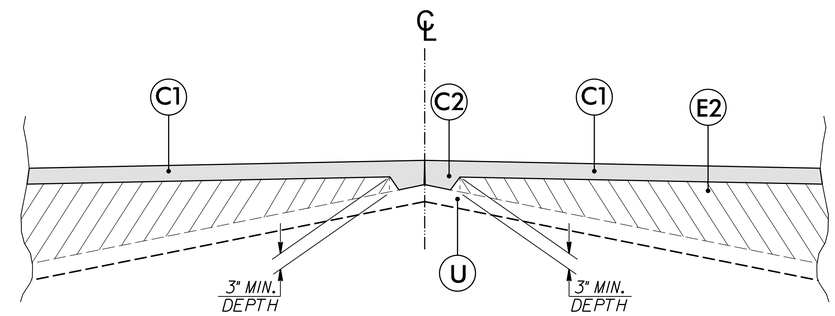

DETAIL SHOWING METHOD OF WEDGING

Note: Pavement edge slopes are 1:1 unless shown otherwise.

PAVEMENT SCHEDULE	
ITEM	DESCRIPTION
C1	Prop. Approx 3.0" Asphalt Concrete Surface Course, Type S9.5B, at an Average Rate of 168 lbs. Per sq. yard in each of two layers.
C2	Prop. Var. Depth Asphalt Concrete Surface Course, Type S9.5B, at an Average Rate of 112 lbs. Per sq. yard Per 1" Depth, to be placed in layers not less than 1.5" or greater than 2" in depth.
E1	Prop. Approx 5.5" Asphalt Concrete Base Course, Type B25.0B, at an Average Rate of 627 lbs. Per sq. yard.
E2	Prop. Var. Depth Asphalt Concrete Base Course, Type B25.0B, at an Average Rate of 114 lbs. Per sq. yard Per 1" Depth, to be placed in layers not less than 3" or greater than 5.5" in depth. For B25.0B placed on unstabilized subgrade, minimum lift thickness is 4.0"
J	6" ABC
T	Earth Material
U	Existing Pavement
W	Var. Depth Asphalt Pavement (See Wedging Detail)

REVISIONS

2/18/2013 7:35:27 AM
G:\DR Projects\DR1100 - NCDOT Group W\430162\Roadway\Proj\430162_RDY_02_TYP.dgn
G:\CADD\Plot\DR1100\1100_rdy.tbl

PROJECT REFERENCE NO.	SHEET NO.
17BP.14.R.39	2A
R/W SHEET NO.	

0′ 20′ 40′

ROADWAY DESIGN ENGINEER
NORTH CAROLINA PROFESSIONAL SEAL 16003 ENGINEER JEAN D. HATFIELD
REGISTERED ENGINEER
2/18/2013

HYDRAULICS ENGINEER
NORTH CAROLINA PROFESSIONAL SEAL 27876 ENGINEER RONG STANSELL
REGISTERED ENGINEER
2/18/2013

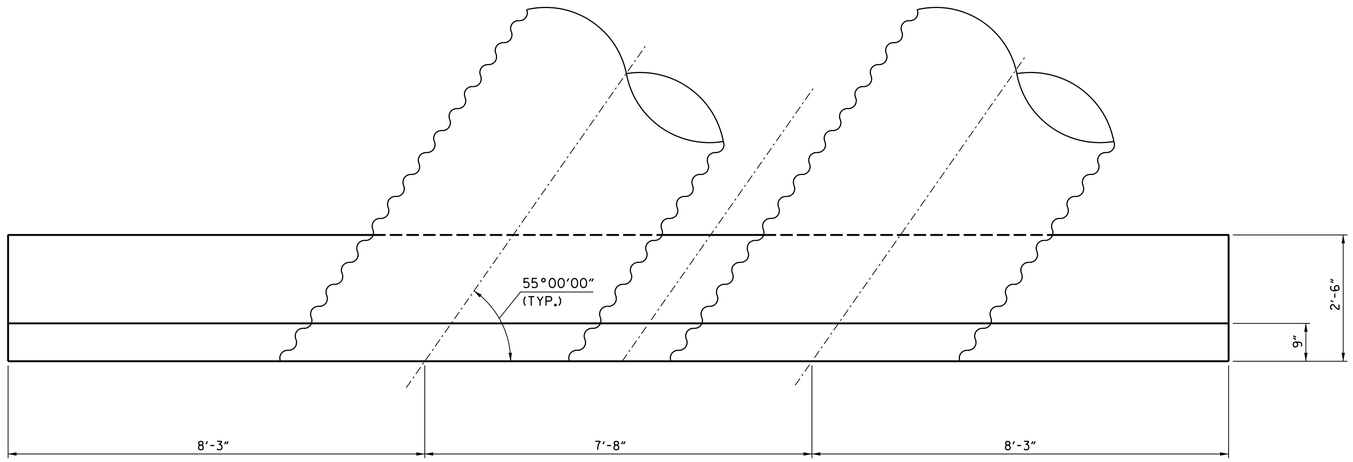

PLAN

NOTES:

CHAMFER ALL CORNERS 1". USE CLASS "B" CONCRETE.

PLACE 2 #6"Y" BARS IN THE TOP OF EACH ENDWALLS FOR PIPE CULVERTS 42" AND OVER WITH A MINIMUM OF 3" COVER AND A LENGTH OF 6" LESS THAN THE ENDWALL LENGTH. CONSTRUCT BOTTOM SLAB WITH FORMS.

WHEN THE CONTRACTOR ELECTS TO USE A CONSTRUCTION JOINT AT THE BOTTOM OF THE PIPE, PLACE BAR "X" DOWELS IN THE BASE AS SHOWN ON PLANS. SPACE BARS APPROXIMATELY 12" CENTERS UNLESS OTHERWISE DIRECTED BY THE ENGINEER.

WHEN THE CONSTRACTOR ELECTS TO USE A CONSTRUCTION JOINT AT THE BOTTOM OF THE PIPE AND POUR THE BASE SAPARATELY, LEAVE THE POUR ROUGH.

DO NOT INTERPRET WALL THICKNESS(T) SHOWN FOR THE THICKNESS ACCEPTABLE, BUT IS USED IN COMPUTING QUANTITIES.

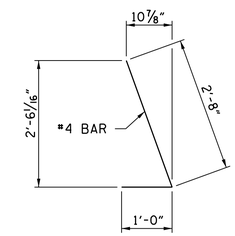

DOWEL BAR "X"

BILL OF MATERIAL FOR 2 ENDWALLS	
CLASS "B" CONCRETE	14.06 CY
REINFORCING STEEL	51 LBS

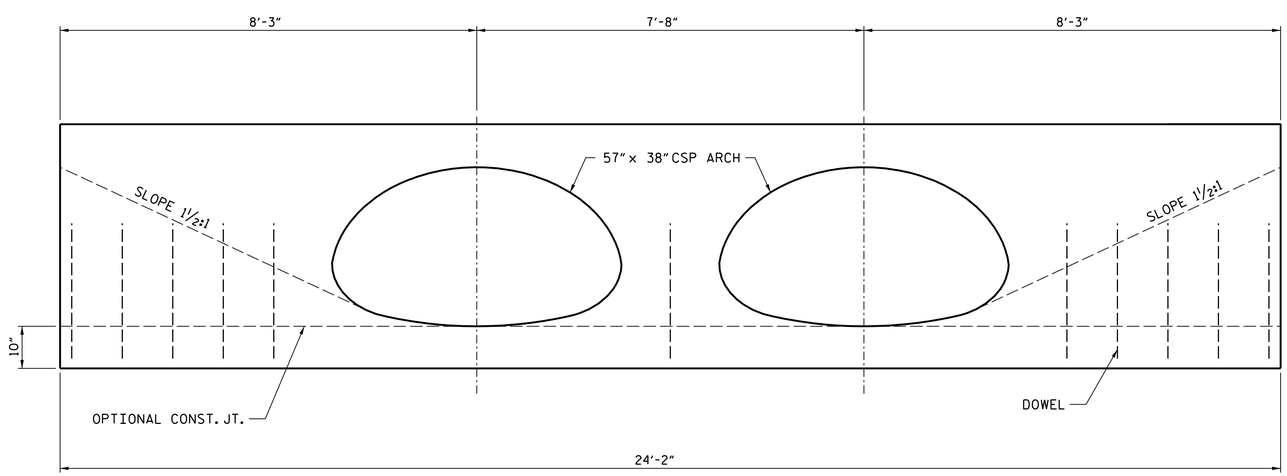

ELEVATION

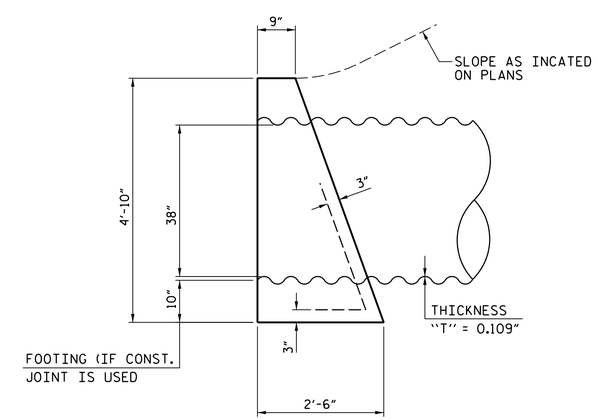

END ELEVATION

CONCRETE ENDWALL DETAILS FOR DOUBLE PIPE CULVERT AT STA. 11+75.00 -L-

REVISIONS

2/18/2013 7:35:28 AM
G:\DR Projects\DR1100 - NCDOT Group W\430162\Roadway\Proj\430162_RDY_02A_HDWL.dgn
G:\CADD\Plot\DR1100\1100_rdy.tbl

THE LOUIS BERGER GROUP, Inc.
1001 Wade Avenue, Suite 400
Raleigh, NC 27605-3322

ROADWAY PLANS

STATE OF NORTH CAROLINA
DIVISION OF HIGHWAYS

SUMMARY OF QUANTITIES

Line Item	Des	Sec No.	Description	Quantity	Unit
1	0000100000-N	800	MOBILIZATION	1	LS
2	0000400000-N	801	CONSTRUCTION SURVEYING	1	LS
3	0008000000-E	200	SUPPLEMENTARY CLEARING & GRUB-BING	1	ACR
4	0036000000-E	225	UNDERCUT EXCAVATION	50	CY
5	0043000000-N	226	GRADING	1	LS
6	0001000000-E	200	CLEARING & GRUBBING (0.5 Acres)	1	LS
7	0022000000-E	225	UNCLASSIFIED EXCAVATION	45	CY
8	0106000000-E	230	BORROW EXCAVATION	500	CY
9	0156000000-E	250	REMOVAL OF EXISTING ASPHALT PAVEMENT	323	SY
10	1011000000-N	500	FINE GRADING (670 SY)	1	LS
11	0195000000-E	265	SELECT GRANULAR MATERIAL	50	CY
12	0196000000-E	270	GEOTEXTILE FOR SOIL STABILIZA-TION	50	SY
13	0318000000-E	300	FOUNDATION CONDITIONING MATERIAL MINOR STRUCTURES	10	TON
14	0320000000-E	300	FOUNDATION CONDITIONING FABRIC	10	SY
15	0600000000-E	310	30" CS PIPE CULVERTS, 0.079" THICK	28	LF
16	0654000000-E	310	57" x 38" CS PIPE ARCH CULVERTS, 0.109" THICK	100	LF
17	0995000000-E	340	PIPE REMOVAL	20	LF
18	1220000000-E	545	INCIDENTAL STONE BASE	50	TON
19	1489000000-E	610	ASPHALT CONC BASE COURSE, TYPE B25.0B	270	TON
20	1519000000-E	610	ASPHALT CONC SURFACE COURSE, TYPE S9.5B	170	TON
21	1575000000-E	620	ASPHALT BINDER FOR PLANT MIX	25	TON
22	2220000000-E	838	REINFORCED ENDWALLS	14.06	CY
23	2264000000-E	840	PIPE PLUGS	0.232	CY
24	2275000000-E	SP	FLOWABLE FILL	4.64	CY
25	3030000000-E	862	STEEL BM GUARDRAIL	187.5	LF
26	3045000000-E	862	STEEL BM GUARDRAIL, SHOP CURVED	31.25	LF
27	3165000000-N	SP	GUARDRAIL ANCHOR UNITS, TYPE 350 TL-2	2	EA
28	3195000000-N	862	GUARDRAIL ANCHOR UNITS, TYPE AT-1	2	EA
29	3569000000-E	867	BARBED WIRE FENCE RESET	485	LF
30	3628000000-E	876	RIP RAP, CLASS I	20	TON
31	3649000000-E	876	RIP RAP, CLASS B	10	TON
32	3656000000-E	876	GEOTEXTILE FOR DRAINAGE	175	SY
33	4116100000-N	904	SIGN ERECTION, RELOCATE, TYPE E (GROUND MOUNTED)	1	EA
34	4400000000-E	1110	WORK ZONE SIGNS (STATIONARY)	593	SF
35	4410000000-E	1110	WORK ZONE SIGNS (BARRICADE MOUNTED)	94	SF
36	4445000000-E	1145	BARRICADES (TYPE III)	72	LF
37	4450000000-E	1150	FLAGGER	48	HR
38	4810000000-E	1205	PAINT PAVEMENT MARKING LINES (4")	2,041	LF
39	4835000000-E	1205	PAINT PAVEMENT MARKING LINES (24")	12	LF
40	6000000000-E	1605	TEMPORARY SILT FENCE	575	LF
41	6009000000-E	1610	STONE FOR EROSION CONTROL, CLASS B	60	TON
42	6012000000-E	1610	SEDIMENT CONTROL STONE	60	TON
43	6015000000-E	1615	TEMPORARY MULCHING	0.6	ACR
44	6018000000-E	1620	SEED FOR TEMPORARY SEEDING	50	LB
45	6021000000-E	1620	FERTILIZER FOR TEMPORARY SEEDING	0.25	TON
46	6036000000-E	1631	MATTING FOR EROSION CONTROL	2,420	SY
47	6038000000-E	SP	PERMANENT SOIL REINFORCEMENT MAT	120	SY
48	6042000000-E	1632	1/4" HARDWARE CLOTH	35	LF
49	6070000000-N	1639	SPECIAL STILLING BASIN	2	EA
50	6071010000-E	SP	WATTLE	15	LF
51	6071020000-E	SP	POLYACRYLAMIDE (PAM)	10	LB
52	6084000000-E	1660	SEEDING & MULCHING	0.6	ACR
53	6090000000-E	1661	SEED FOR REPAIR SEEDING	50	LB
54	6093000000-E	1661	FERTILIZER FOR REPAIR SEEDING	0.25	TON
55	6096000000-E	1662	SEED FOR SUPPLEMENTAL SEEDING	50	LB
56	6108000000-E	1665	FERTILIZER TOPDRESSING	0.50	TON
57	6111000000-E	SP	IMPERVIOUS DIKE	220	LF
58	6117000000-N	SP	RESPONSE FOR EROSION CONTROL	9	EA
			STRUCTURES		
59	8035000000-N	402	REMOVAL OF EXISTING STRUCTURE AT STATION -L- 11+74	1	LS
60	8035000000-N	402	REMOVAL OF EXISTING STRUCTURE AT STATION -L- 13+06	1	LS
61	8126000000-N	414	CULVERT EXCAVATION, STATION -L- 13+06.50	1	LS
62	8133000000-E	414	FOUNDATION CONDITIONING MATER-IAL, BOX CULVERT	50	TON
63	8196000000-E	420	CLASS A CONCRETE (CULVERT)	73.0	CY
64	8245000000-E	425	REINFORCING STEEL (CULVERT)	16,965	LB
65	8594000000-E	876	RIP RAP, CLASS B	12	TON

REVISIONS

6/5/2013 2:22:32 PM
G:\DR Projects\DR11000 - NCDOT Group W\430162_Roadway\Proj\430162_RDY_03_SOQ.dgn
G:\CADD\Plots\DR11000\11000_rdy.tbl

THE LOUIS BERGER GROUP, Inc.
1001 Wade Avenue, Suite 400
Raleigh, NC 27605-3322

ROADWAY PLANS

STATE OF NORTH CAROLINA
DIVISION OF HIGHWAYS

"N" = DISTANCE FROM EDGE OF LANE TO FACE OF GUARDRAIL.
TOTAL SHOULDER WIDTH = DISTANCE FROM EDGE OF TRAVEL LANE TO SHOULDER BREAK POINT.
FLARE LENGTH = DISTANCE FROM LAST SECTION OF PARALLEL GUARDRAIL TO END OF GUARDRAIL.
W = TOTAL WIDTH OF FLARE FROM BEGINNING OF TAPER TO END OF GUARDRAIL.
G = GATING IMPACT ATTENUATOR TYPE 350
NG = NON-GATING IMPACT ATTENUATOR TYPE 350

GUARDRAIL SUMMARY

SURVEY LINE	BEG. STA.	END STA.	LOCATION	LENGTH STRAIGHT	LENGTH SHOP CURVED	LENGTH DOUBLE FACED	WARRANT POINT APPROACH END	WARRANT POINT TRAILING END	"N" DIST. FROM E.O.L.	TOTAL SHOUL. WIDTH	FLARE LENGTH APPROACH END	FLARE LENGTH TRAILING END	W APPROACH END	W TRAILING END	ANCHORS XI MOD	XI	GRAU 350 TL-2	M-350	TYPE-III	CAT-1	VI MOD	BIC	AT-1	IMPACT ATTENUATOR TYPE 350 EA	G	NG	SINGLE FACED GUARDRAIL	REMOVE EXISTING GUARDRAIL	REMOVE AND STOCKPILE EXISTING GUARDRAIL	REMARKS
-L-	12+10.00	13+60.00	LT	150	–	–	–	–	3′	6′	–	–	–	–	–	–	2	–	–	–	–	–	–	–	–	–	–	–	–	–
-L- /-Y1-	-Y1- 10+39	-L- 13+39.00	LT /RT	100	31.25	–	–	–	3′	6′	–	–	–	–	–	–	1	–	–	–	–	–	1	–	–	–	–	–	–	–
–	–	–	–	–	–	–	–	–	–	–	–	–	–	–	–	–	–	–	–	–	–	–	–	–	–	–	–	–	–	–
–	–	–	–	–	–	–	–	–	–	–	–	–	–	–	–	–	–	–	–	–	–	–	–	–	–	–	–	–	–	–
–	–	–	–	–	–	–	–	–	–	–	–	–	–	–	–	–	–	–	–	–	–	–	–	–	–	–	–	–	–	–
–	–	–	–	–	–	–	–	–	–	–	–	–	–	–	–	–	–	–	–	–	–	–	–	–	–	–	–	–	–	–
			SUB-TOTAL	250	31.25										DEDUCTIONS FOR GUARDRAIL ANCHOR UNITS															
	DEDUCTIONS FOR GUARDRAIL ANCHOR UNITS			-62.5											TYPE GRAU-350 TL-2		2 @ 25.00′ =		50′											
			TOTAL	187.5	31.25										TYPE AT-1		2 @ 6.25′ =		12.5′											
			SAY	187.5	31.25												TOTAL =		62.5′											

SUMMARY OF EARTHWORK (IN CUBIC YARDS)

STATION	STATION	UNCL. EXCAV.	EMBANK. +%	BORROW	WASTE
-L- 11+25.00	13+06.50	6	225	219	0
-L- 13+06.50	15+20.00	2	248	246	0
-Y1- 10+10.00	10+95.00	38	43	5	0
–	–	–	–	–	–
–	–	–	–	–	–
–	–	–	–	–	–
PROJECT TOTALS:		46	516	470	0
LOSS DUE TO CLEARING & GRUBBING		-5	–	5	–
EST. 5% TO REPLACE TOP SOIL ON BORROW PIT		–	–	25	–
–		–	–	–	–
GRAND TOTALS:		41	516	500	0
–		–	–	–	–
SAY:		45	–	500	–

CONTINGENCY ITEMS
UNDERCUT EXCAVATION 50 CY
SELECT GRANULAR MATERIAL 50 CY
GEOTEXTILE FOR SOIL STABILIZATION 50 SY
CLASS IV SUBGRADE STABILIZATION 50 TON
INCIDENTAL STONE BASE 50 TON

PAVEMENT REMOVAL SUMMARY

SURVEY LINE	STATION	STATION	LOCATION LT/RT/CL	YD^2
-L-	12+40	12+97	CL	113.2
-L-	13+13	14+10	CL	194.4
–	–	–	–	–
–	–	–	–	–
			TOTAL:	307.6
			–	–
			SAY:	323

NOTE: INVERT ELEVATIONS INDICATED ARE FOR BID PURPOSES ONLY AND SHALL NOT BE USED FOR PROJECT CONSTRUCTION STAKEOUT.
SEE "STANDARDS SPECIFICATIONS FOR ROADS AND STRUCTURES, SECTION 300-5".

LIST OF PIPES, ENDWALLS, ETC. (FOR PIPES 48" & UNDER)

STATION	LOCATION (LT, RT, OR CL)	STRUCTURE NO. FROM	TO	TOP ELEVATION	INVERT ELEVATION	C.S. PIPE 30" (.079)	CONC. & BRICK PIPE PLUG, C.Y. STD. 840.71	PIPE REMOVAL LIN. FT.	REMARKS
DWY1- 10+23	CL	405		2677.45	2676.44	28			
-L- 11+50	RT							20	REMOVE PORTION OF EXISTING 24" CMP
-L- 12+19	RT						4.64		PLUG 24" CMP W/ FLOWABLE FILL
									REMOVE EXIST HEADWALLS
SHEET TOTALS						28	4.64	20	

ABBREVIATIONS
C.B. CATCH BASIN
N.D.I. NARROW DROP INLET
D.I. DROP INLET
G.D.I. GRATED DROP INLET
G.D.I. (N.S.) GRATED DROP INLET (NARROW SLOT)
J.B. JUNCTION BOX
M.H. MANHOLE
T.B.D.I. TRAFFIC BEARING DROP INLET
T.B.J.B. TRAFFIC BEARING JUNCTION BOX

LIST OF PIPES, ENDWALLS, ETC. (FOR PIPES 54" & OVER)

STATION	LOCATION (LT, RT, OR CL)	STRUCTURE NO. FROM	TO	TOP ELEVATION	INVERT ELEVATION	REINFORCED ENDWALLS WITH R.C. – C.Y.	57"x38" CS ARCH PIPE (0.109")	REMARKS
-L- 11+66	CL	0401	0402	2675.21	2673.85		50	
L- 11+74	CL	0403	0404	2675.21	2673.85	14.06	50	
								@ -L- 11+75 CL
						14.06	100	

ABBREVIATIONS
C.B. CATCH BASIN
N.D.I. NARROW DROP INLET
D.I. DROP INLET
G.D.I. GRATED DROP INLET
G.D.I. (N.S.) GRATED DROP INLET (NARROW SLOT)
J.B. JUNCTION BOX
M.H. MANHOLE
T.B.D.I. TRAFFIC BEARING DROP INLET
T.B.J.B. TRAFFIC BEARING JUNCTION BOX

Note: Approximate quantities only. Unclassified Excavation, Borrow Excavation, Fine Grading, and Clearing and Grubbing will be paid for at the contract lump sum price for "Grading."

REVISIONS

THE LOUIS BERGER GROUP, Inc.
1001 Wade Avenue, Suite 400
Raleigh, NC 27605-3322

ROADWAY PLANS

5/29/2013 9:52:11 AM
G:\DR Projects\DRI100 - NCDOT Group W\430162\Roadway\Proj\430162_RDY_03A_SUMMARY.dgn
G:\CADD\Plot\DRI100\I100_rdy.tbl

PROJECT REFERENCE NO.	SHEET NO.
17BP.14.R.39	4
R/W SHEET NO.	

ROADWAY DESIGN ENGINEER	HYDRAULICS ENGINEER
NORTH CAROLINA PROFESSIONAL SEAL 16003 ENGINEER JEAN D. HATFIELD	NORTH CAROLINA PROFESSIONAL SEAL 27876 ENGINEER RYAN STANSELL
REGISTERED ENGINEER 5/29/2013	REGISTERED ENGINEER 5/29/2013

0' 20' 40'

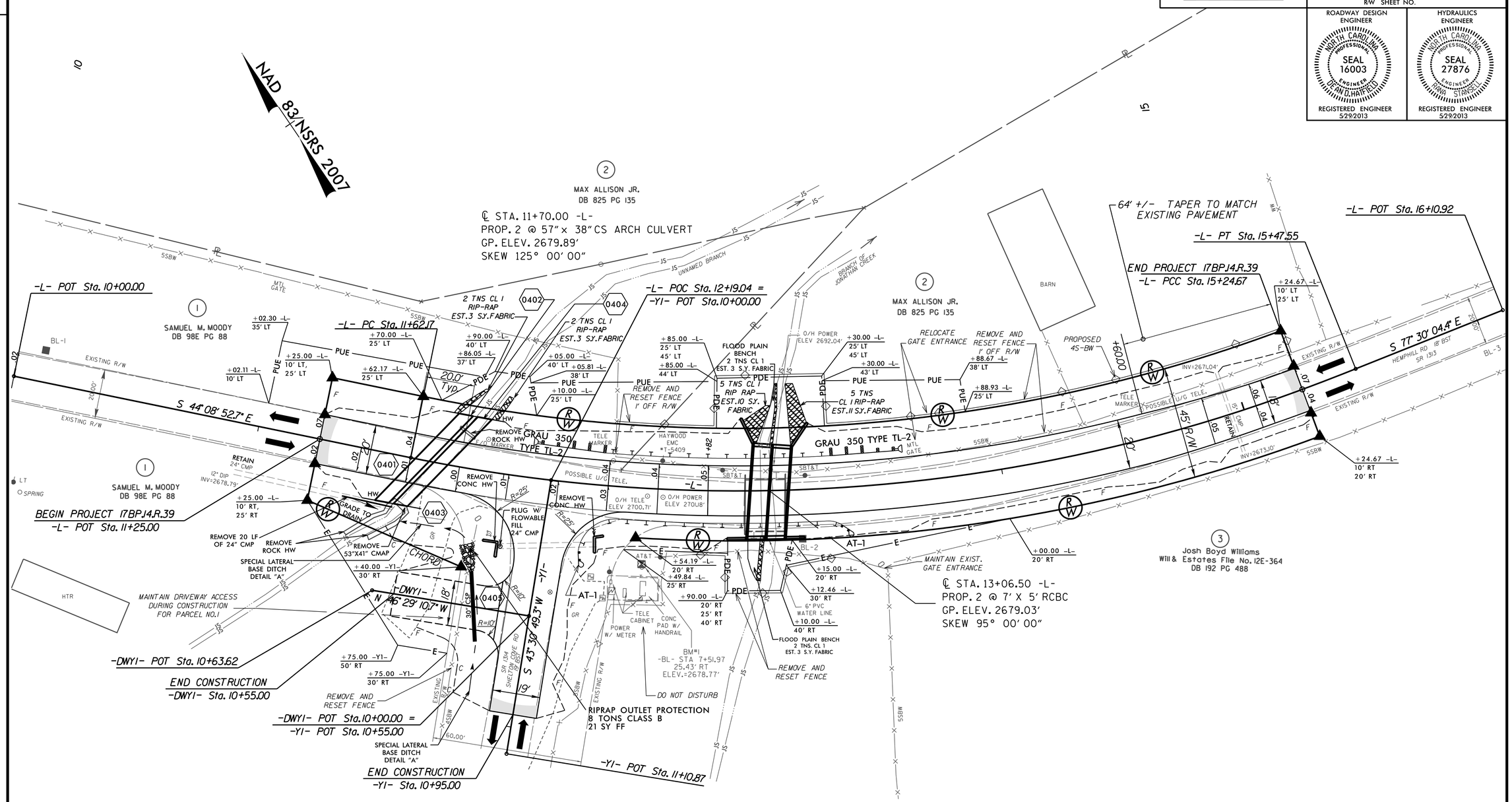

DETAIL A

SPECIAL LATERAL BASE DITCH

(Not to Scale)

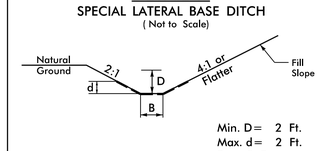

Min. D= 2 Ft.
Max. d= 2 Ft.
B= 3 Ft.

Type of Liner= PSRM

FROM -L- STA. 11+62 TO STA. 11+93 RT.
FROM -Y1- STA. 10+28 TO STA. 10+90 RT.

N.T.S. FLOOD PLAIN BENCH DETAIL

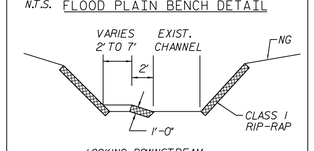

OUTLET DETAIL

N.T.S.

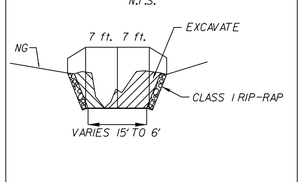

-L-

PI = 13+48.27	PI = 15+36.11
Δ = 31° 57' 10.3" (LT)	Δ = 1° 24' 01.4" (LT)
D = 8° 48' 53.0"	D = 6° 07' 06.8"
L = 362.49'	L = 22.89'
T = 186.10'	T = 11.44'
R = 650.00'	R = 936.43'
Se = 0.05	Se = EXIST.
INC = 20'	

SEE SHEET 5 FOR PROFILE
SEE SHEETS C-1 THROUGH C-7 FOR CULVERT PLANS
SEE SHEET 2-A FOR CONCRETE ENDWALL DETAILS FOR DOUBLE PIPE CULVERT

THE LOUIS BERGER GROUP, Inc.
1001 Wade Avenue, Suite 400
Raleigh, NC 27605-3322

ROADWAY PLANS

REVISIONS

5/29/2013 9:43:36 AM
G:\OR Projects\OR1100 - NCDOT Group W\430162\Roadway\Proj\430162_RDY_04_PSH.dgn
G:\CADD\Plot\OR1100\1100-rdy.tbl

THE LOUIS BERGER GROUP, Inc.
1001 Wade Avenue, Suite 400
Raleigh, North Carolina 27605

PROJECT REFERENCE NO.	SHEET NO.
17BP.14.R.39	5

ROADWAY DESIGN ENGINEER — NORTH CAROLINA PROFESSIONAL SEAL 16003 ENGINEER DEAN D. HATFIELD — REGISTERED ENGINEER 2/18/2013

HYDRAULICS ENGINEER — NORTH CAROLINA PROFESSIONAL SEAL 27876 ENGINEER REBECCA STANSELL — REGISTERED ENGINEER 2/18/2013

HORIZONTAL 0 20 40 — VERTICAL 0 4 8

-L-

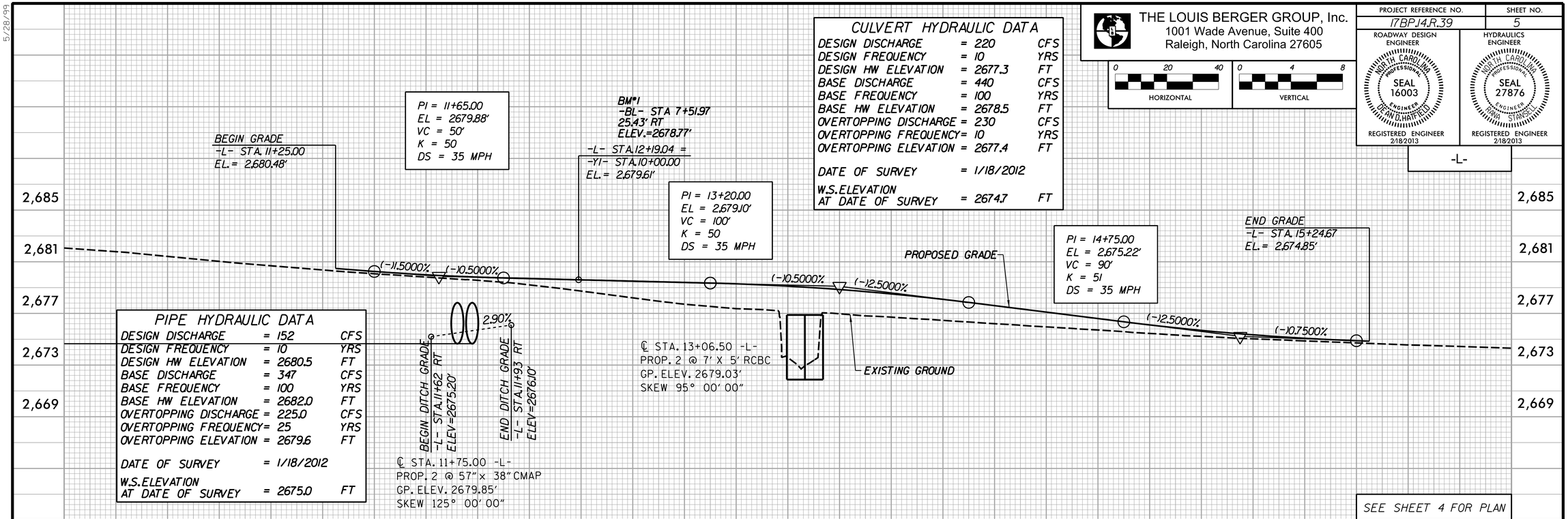

PIPE HYDRAULIC DATA		
DESIGN DISCHARGE	= 152	CFS
DESIGN FREQUENCY	= 10	YRS
DESIGN HW ELEVATION	= 2680.5	FT
BASE DISCHARGE	= 347	CFS
BASE FREQUENCY	= 100	YRS
BASE HW ELEVATION	= 2682.0	FT
OVERTOPPING DISCHARGE	= 225.0	CFS
OVERTOPPING FREQUENCY	= 25	YRS
OVERTOPPING ELEVATION	= 2679.6	FT
DATE OF SURVEY	= 1/18/2012	
W.S.ELEVATION AT DATE OF SURVEY	= 2675.0	FT

CULVERT HYDRAULIC DATA		
DESIGN DISCHARGE	= 220	CFS
DESIGN FREQUENCY	= 10	YRS
DESIGN HW ELEVATION	= 2677.3	FT
BASE DISCHARGE	= 440	CFS
BASE FREQUENCY	= 100	YRS
BASE HW ELEVATION	= 2678.5	FT
OVERTOPPING DISCHARGE	= 230	CFS
OVERTOPPING FREQUENCY	= 10	YRS
OVERTOPPING ELEVATION	= 2677.4	FT
DATE OF SURVEY	= 1/18/2012	
W.S.ELEVATION AT DATE OF SURVEY	= 2674.7	FT

SEE SHEET 4 FOR PLAN

-Y1-

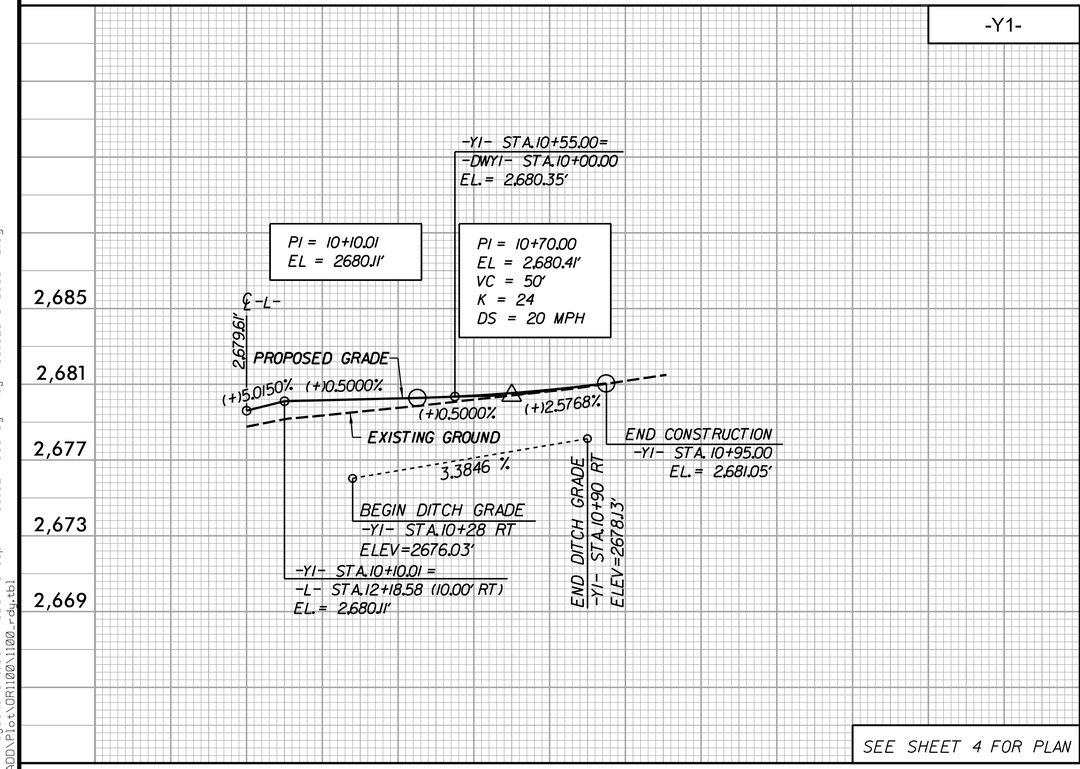

SEE SHEET 4 FOR PLAN

-DWY1-

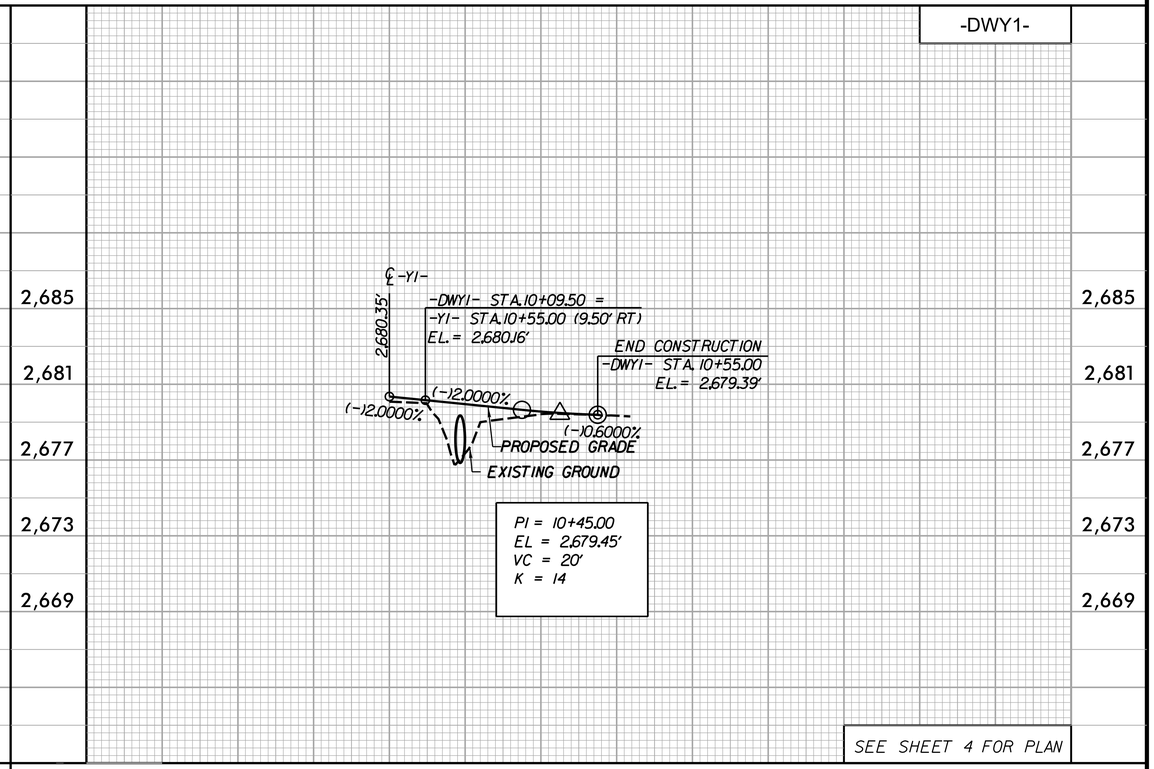

SEE SHEET 4 FOR PLAN

5/28/99

2/18/2013 7:35:34 AM
G:\OR Projects\OR1100 - NCDOT Group W\430162\Roadway\Proj\430162_RDY_05_PFL.dgn
G:\CADD\Plot\OR1100\1100_rdy.tbl

STATE OF NORTH CAROLINA
DIVISION OF HIGHWAYS

TRANSPORTATION MANAGEMENT PLAN

HAYWOOD COUNTY

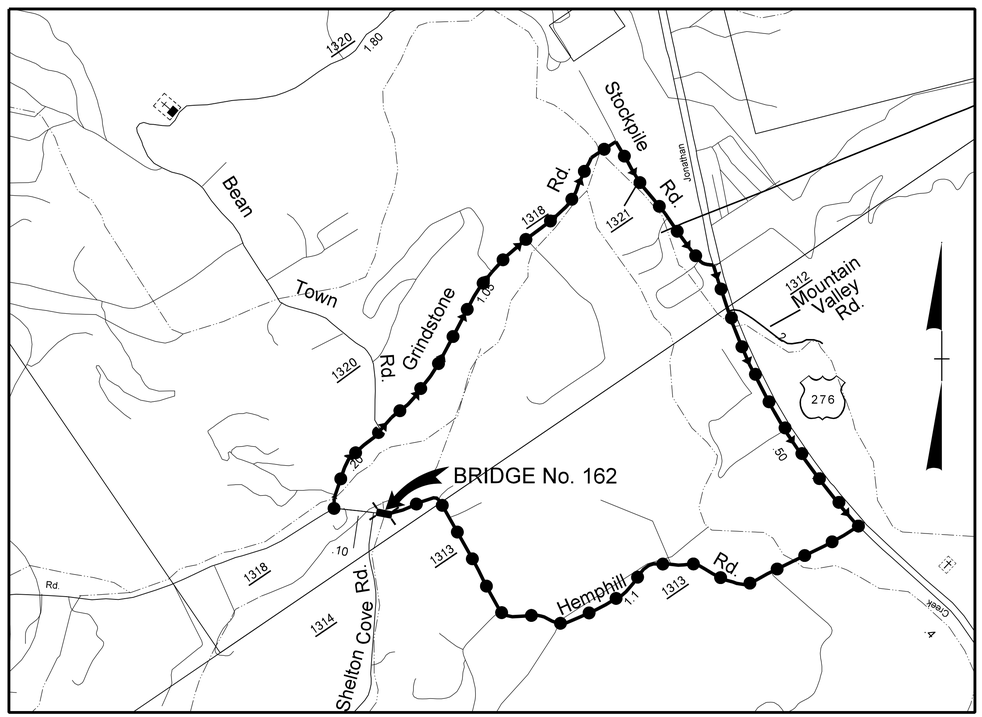

VICINITY MAP NTS

OFF-SITE DETOUR (PHASE I)

OFF-SITE DETOUR (PHASE II)

LOCATION: BRIDGE NO. 162 ON SR 1313 OVER BRANCH OF JONATHAN CREEK

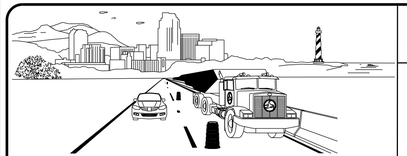

WORK ZONE SAFETY & MOBILITY
"from the MOUNTAINS to the COAST"

N.C.D.O.T. WORK ZONE TRAFFIC CONTROL
1561 MAIL SERVICE CENTER (MSC) RALEIGH, NC 27699-1561
750 N. GREENFIELD PARKWAY, GARNER, NC 27529 (DELIVERY)
PHONE: (919) 773-2800 FAX: (919) 771-2745

J. S. BOURNE, P.E. — STATE TRAFFIC MANAGEMENT ENGINEER
D. HATFIELD, P.E. — TRAFFIC CONTROL PROJECT ENGINEER
C. WHITE, P.E. — TRAFFIC CONTROL PROJECT DESIGN ENGINEER
_____ — TRAFFIC CONTROL DESIGN ENGINEER

DIVISION OF HIGHWAYS · STATE OF NORTH CAROLINA · DEPARTMENT OF TRANSPORTATION · WORK ZONE TRAFFIC CONTROL

INDEX OF SHEETS

SHEET NO.	TITLE
TMP-1	TITLE SHEET, AND INDEX OF SHEETS
TMP-1A	LIST OF APPLICABLE ROADWAY STANDARD DRAWINGS, LEGEND, AND TEMPORARY PAVEMENT MARKING
TMP-1B	TRANSPORTATION OPERATIONS PLAN: (MANAGEMENT STRATEGIES AND GENERAL NOTES) AND SPECIAL SIGN DESIGN
TMP-2A	TEMPORARY TRAFFIC CONTROL PHASING - PHASE I
TMP-2B	TEMPORARY TRAFFIC CONTROL PHASING - PHASE II

THE LOUIS BERGER GROUP, Inc.
1001 Wade Avenue, Suite 400
Raleigh, North Carolina 27605

APPROVED: _____
DATE: _____

SEAL

SHEET NO.
TMP-1

PROJECT: 17BP.14.R.39

$$$$$SYSTIME$$$$
$$$$$$RSN$$$$$$$$DGN$$$$$$$$$$$$$$$$$$
$$$$USERNAME$$$

PROJ. REFERENCE NO.	SHEET NO.
17BP.14.R.39	TMP-1A

ROADWAY STANDARD DRAWINGS

THE FOLLOWING ROADWAY STANDARDS AS SHOWN IN "ROADWAY STANDARD DRAWINGS" - PROJECT SERVICES UNIT - N.C. DEPARTMENT OF TRANSPORTATION - RALEIGH, N.C., DATED JANUARY 2012 ARE APPLICABLE TO THIS PROJECT AND BY REFERENCE HEREBY ARE CONSIDERED A PART OF THESE PLANS:

STD. NO.	TITLE
1101.01	WORK ZONE WARNING SIGNS
1101.03	TEMPORARY ROAD CLOSURES
1101.05	WORK ZONE VEHICLE ACCESSES
1101.11	TRAFFIC CONTROL DESIGN TABLES
1110.01	STATIONARY WORK ZONE SIGNS
1130.01	DRUMS
1145.01	BARRICADES
1150.01	FLAGGING DEVICES

LEGEND

GENERAL

DIRECTION OF TRAFFIC FLOW

NORTH ARROW

TRAFFIC CONTROL DEVICES

BARRICADE (TYPE III)

TEMPORARY SIGNING

STATIONARY SIGN

EXISTING STATIONARY SIGN

TEMPORARY PAVEMENT MARKING

N/A

APPROVED:_____ DATE:_____

SEAL

NORTH CAROLINA PROFESSIONAL SEAL 16003 ENGINEER DEAN D.HATFIELD

DIVISION OF HIGHWAYS STATE OF NORTH CAROLINA DEPARTMENT OF TRANSPORTATION WORK ZONE TRAFFIC CONTROL SEAL

ROADWAY STANDARD DRAWINGS & LEGEND

$$$$$$SYSTIME$$$$$
$$$$$$$$$$$$$$$$$$DGN$$$$$$$$$$$$$$$$$$$$
$$$$USERNAME$$$$

PROJ. REFERENCE NO.	SHEET NO.
17BP.14.R.39	TMP-1B

MANAGEMENT STRATEGIES

TRAFFIC WILL BE DETOURED OFFSITE DURING CONSTRUCTION ALONG A ROUTE DETERMINED BY NCDOT.

THE OFFSITE DETOUR WILL INCLUDE HIGHWAY 276 AND SR 1318 (HEMPHILL RD.). (SEE SHEETS TMP-2A & TMP-2B)

TRAFFIC SHALL BE MAINTAINED, AT ALL TIMES, TO SR 1314 (SHELTON COVE RD.) AND THE EXISTING DRIVEWAY WITHIN THE PROJECT LIMITS, PRIOR TO ITS RELOCATION.

PROJECT PHASING

PHASE I
STEP 1:
- CONSTRUCT TIE FOR -DWY1- INTO -Y1- AT PROPOSED RELOCATION. CLOSE EXISTING DRIVE ALONG -L- WITH TYPE III BARRICADES AS SHOWN ON SHEET TMP-2A.

STEP 2:
- INSTALL OFF SITE DETOUR AND ROAD CLOSURE SIGNING (PROVIDED BY CONTRACTOR) AS SHOWN ON SHEET TMP-2A AND TEMPORARY STOP BAR ON HEMPHILL RD JUST NORTH OF GRINDSTONE RD USING RDWY STD 1101.03, SHEET 2 OF 9.

- USING RDWY STD 1101.03, SHEETS 1 & 2 OF 9, CLOSE SR 1313 (HEMPHILL RD) TO THRU TRAFFIC FROM -L- STA. 11+25+/- TO -L- STA. 11+90+/- AND PLACE TRAFFIC ONTO OFF SITE DETOUR - PHASE I AS SHOWN ON SHEET TMP-2A. MAINTAIN ACCESS TO -Y1- (SHELTON COVE RD) AT ALL TIMES.

STEP 3:
- INSTALL PROPOSED ARCH PIPES AT -L- STA. 11+70+/- (SEE ROADWAY PLANS) AND ROADWAY UP TO BUT NOT INCLUDING THE FINAL LAYER OF SURFACE COURSE. PLACE TEMPORARY PAINT PAVEMENT MARKINGS FROM -L- STA 11+25+/- TO -L- STA 11+90+/-.

PHASE II

STEP 1:
- RETAIN DETOUR AND ROAD CLOSURE SIGNING FROM PHASE I AS SHOWN ON SHEET TMP-2B AND SHIFT CLOSURE LOCATION. MAINTAIN ACCESS TO -Y1- (SHELTON COVE RD).

- USING RDWY STD 1101.03, SHEET 1 OF 9, RESET BARRICADES FROM PHASE I TO CLOSE SR 1313 (HEMPHILL RD) TO THRU TRAFFIC FROM -L- STA. 12+50+/- TO -L- STA. 15+25+/- AND RETAIN TRAFFIC ON OFF SITE DETOUR AS SHOWN ON SHEET TMP-2B.

STEP 2:
- REMOVE EXISTING BRIDGE No. 162 AND APPROACHES AND CONSTRUCT THE PROPOSED CULVERT AND ROADWAY ALONG -L- FROM STA. 12+50+/- TO -L- STA. 15+25+/- UP TO BUT NOT INCLUDING THE FINAL LAYER OF SURFACE COURSE.

STEP 3:
- USING FLAGGERS (RDWY STD 1101.02 SHEET 1 OF 15) CONSTRUCT -Y1- IMPROVEMENTS UP TO AND INCLUDING THE FINAL LAYER OF SURFACE COURSE, PLACE FINAL LAYER OF SURFACE COURSE ON PROPOSED -L- AND PAVEMENT MARKINGS ON PROPOSED -L- AND -Y1-. (SEE CONSTRUCTION AND PAVEMENT MARKING PLANS) TRAFFIC WILL BE IN THE FINAL TWO-WAY, TWO-LANE TRAFFIC AT THE END OF THE WORK PERIOD.

STEP 4:
- REMOVE ALL TRAFFIC CONTROL DEVICES, SIGNING AND DETOUR ROUTE SIGNING.

- OPEN TO FINAL TRAFFIC PATTERN.

SPECIAL SIGN DETAIL

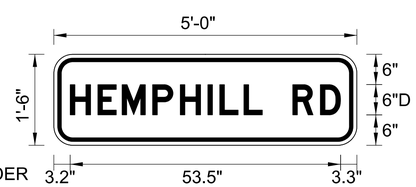

BORDER
R=3"
TH=0.75"
IN=0.75"
BLACK ON FLOURESCENT ORANGE

LETTER POSITIONS

3.2	H 5.5	E 4.8	M 6	P 5.5	H 5.5	I 2.3	L 4.8	L 3.7	6	R 5.5	D 3.9	3.3

NOTES:

1. LETTER SPACINGS ARE TO START OF NEXT LETTER.
2. LEGEND AND BORDER SHALL BE DIRECT APPLIED BLACK NON-REFLECTIVE SHEETING.
3. BACKGROUND SHALL BE TYPE VII, VIII, OR IX (PRISMATIC) FLOURESCENT ORANGE RETROREFLECTIVE SHEETING.

GENERAL NOTES / LOCAL NOTES

CHANGES MAY BE REQUIRED WHEN PHYSICAL DIMENSIONS IN THE DETAIL DRAWINGS, STANDARD DETAILS, AND ROADWAY DETAILS ARE NOT ATTAINABLE TO MEET FIELD CONDITIONS OR RESULT IN DUPLICATE OR UNDESIRED OVERLAPPING OF DEVICES. MODIFICATION MAY INCLUDE: MOVING, SUPPLEMENTING, COVERING, OR REMOVAL OF DEVICES AS DIRECTED BY THE ENGINEER.

THE FOLLOWING GENERAL NOTES APPLY AT ALL TIMES FOR THE DURATION OF THE CONSTRUCTION PROJECT EXCEPT WHEN OTHERWISE NOTED IN THE PLAN OR DIRECTED BY THE ENGINEER.

PAVEMENT EDGE DROP OFF REQUIREMENTS

A) BACKFILL AT A 6:1 SLOPE UP TO THE EDGE AND ELEVATION OF EXISTING PAVEMENT IN AREAS ADJACENT TO AN OPENED TRAVEL LANE THAT HAS AN EDGE OF PAVEMENT DROP-OFF AS FOLLOWS:

BACKFILL DROP-OFFS THAT EXCEED 2 INCHES ON ROADWAYS WITH POSTED SPEED LIMITS OF 45 MPH OR GREATER.

BACKFILL DROP-OFFS THAT EXCEED 3 INCHES ON ROADWAYS WITH POSTED SPEED LIMITS LESS THAN 45 MPH.

BACKFILL WITH SUITABLE COMPACTED MATERIAL, AS APPROVED BY THE ENGINEER, AT NO EXPENSE TO THE DEPARTMENT.

TRAFFIC PATTERN ALTERATIONS

B) NOTIFY THE ENGINEER TWENTY ONE (21) CALENDAR DAYS PRIOR TO ANY TRAFFIC PATTERN ALTERATION.

SIGNING

C) PROVIDE SIGNING AND DEVICES REQUIRED TO CLOSE THE ROAD ACCORDING TO THE ROADWAY STANDARD DRAWINGS AND TRAFFIC CONTROL PLANS.

PROVIDE SIGNING REQUIRED FOR THE OFF-SITE DETOUR ROUTE AS SHOWN IN THE TRAFFIC CONTROL PLANS.

D) COVER OR REMOVE ALL SIGNS AND DEVICES REQUIRED TO CLOSE THE ROAD WHEN ROAD CLOSURE IS NOT IN OPERATION.

COVER OR REMOVE ALL SIGNS REQUIRED FOR THE OFF-SITE DETOUR WHEN THE DETOUR IS NOT IN OPERATION.

E) ENSURE ALL NECESSARY SIGNING IS IN PLACE PRIOR TO ALTERING ANY TRAFFIC PATTERN.

TRAFFIC CONTROL DEVICES

F) PLACE TYPE III BARRICADES, WITH "ROAD CLOSED" SIGN R11-2 ATTACHED, OF SUFFICIENT LENGTH TO CLOSE ENTIRE ROADWAY.

APPROVED:_____ DATE:_____

SEAL

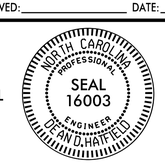

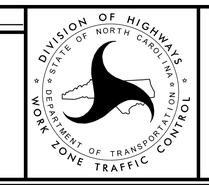

TRANSPORTATION OPERATIONS PLAN

$$$$$SYSTIME$$$$$
$$$$$$$$$$$$$$$$DGN$$$$$$$$$$$$$$$$$$$$
$$$$$USERNAME$$$$

PROJ. REFERENCE NO.	SHEET NO.
17BP.14.R.39	TMP-2A

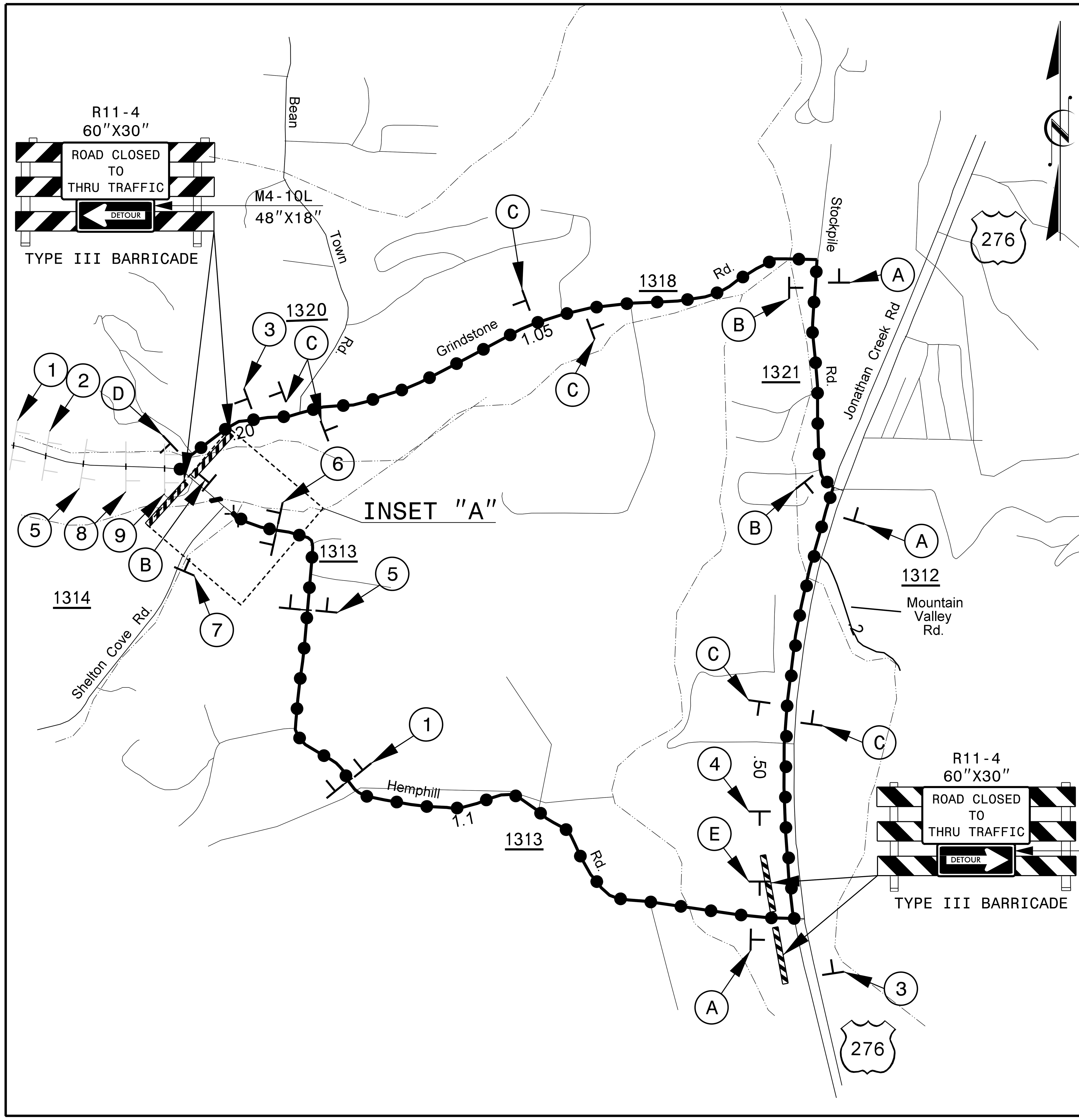

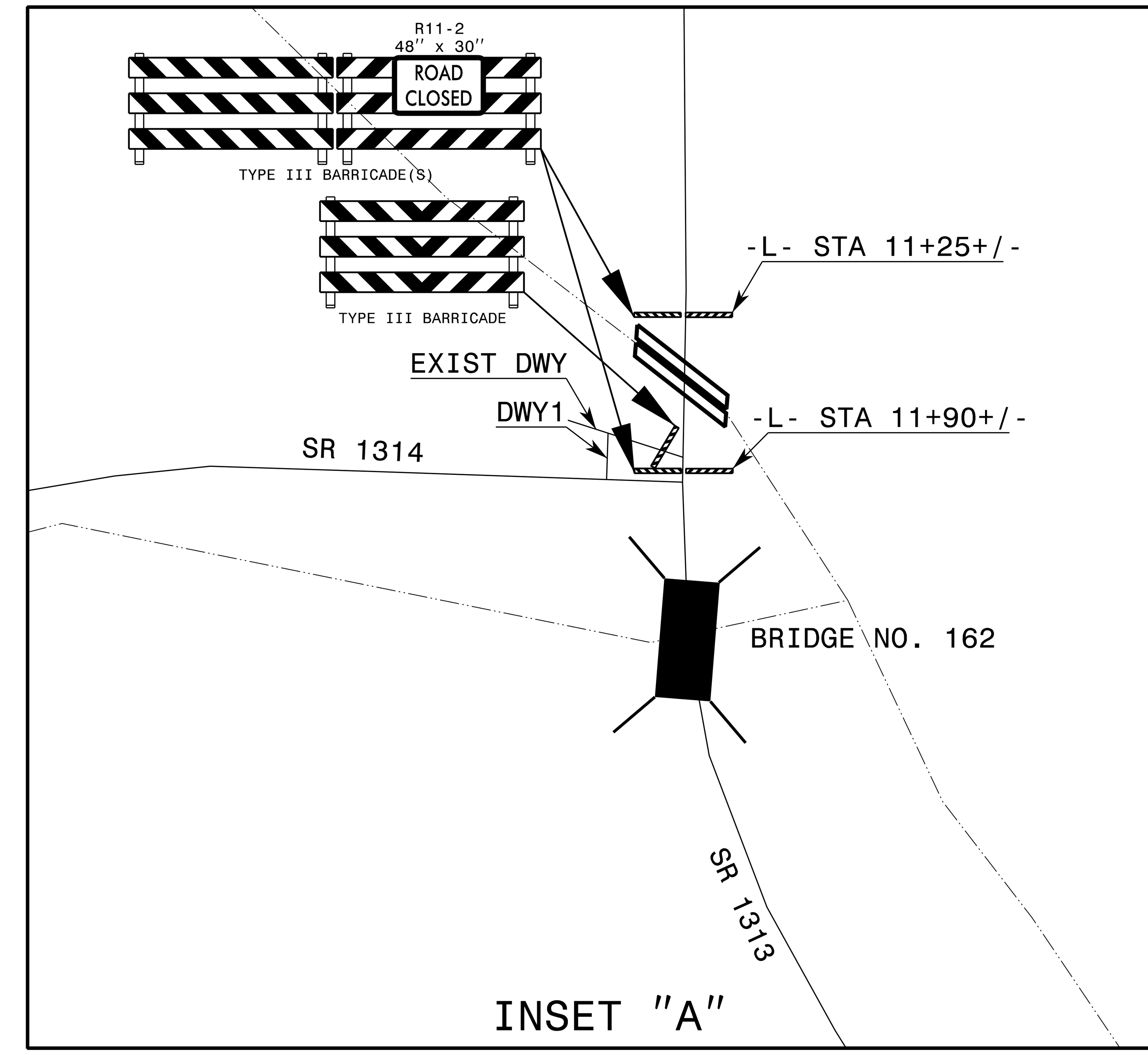

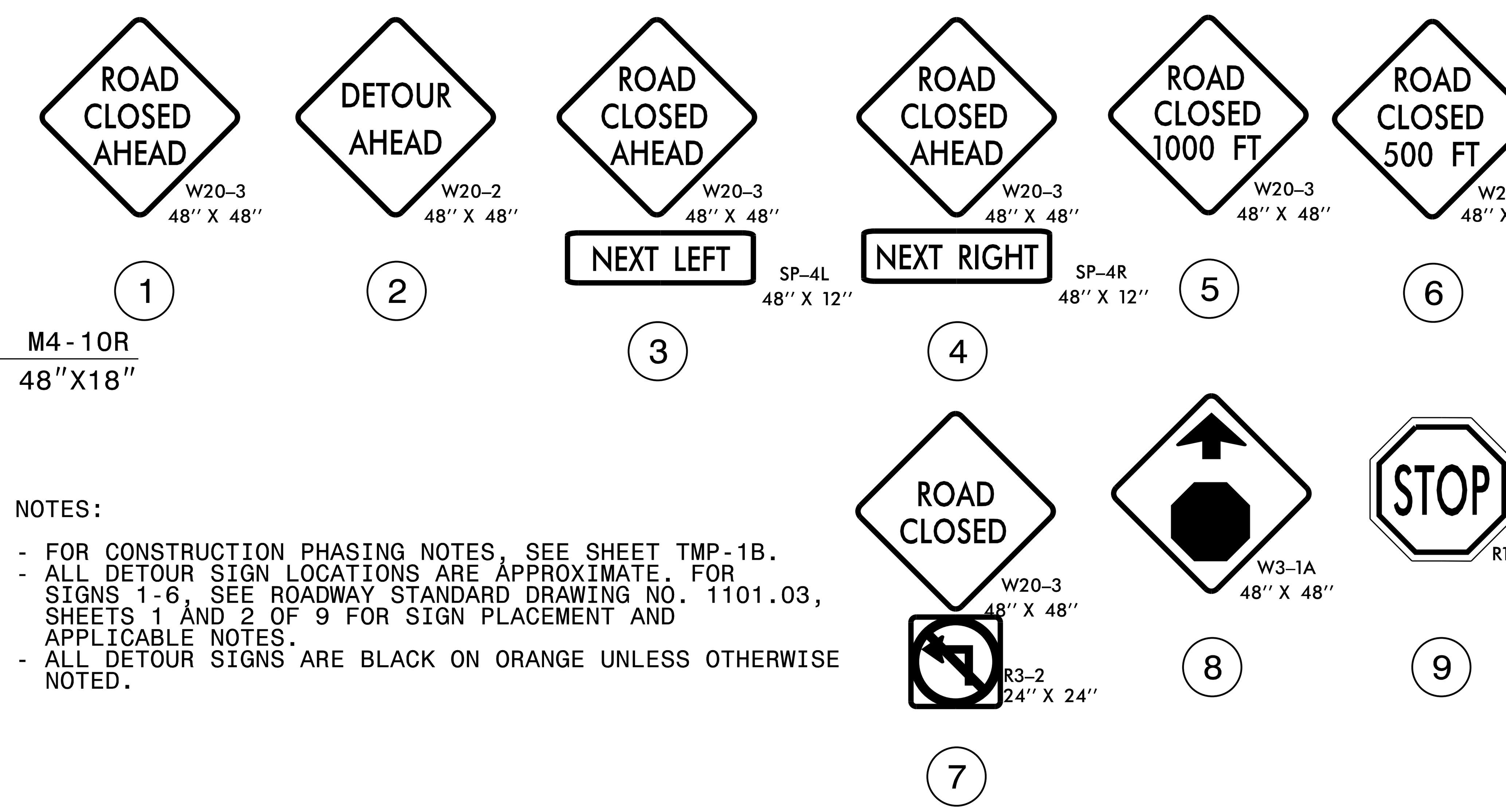

NOTES:

- FOR CONSTRUCTION PHASING NOTES, SEE SHEET TMP-1B.
- ALL DETOUR SIGN LOCATIONS ARE APPROXIMATE. FOR SIGNS 1-6, SEE ROADWAY STANDARD DRAWING NO. 1101.03, SHEETS 1 AND 2 OF 9 FOR SIGN PLACEMENT AND APPLICABLE NOTES.
- ALL DETOUR SIGNS ARE BLACK ON ORANGE UNLESS OTHERWISE NOTED.

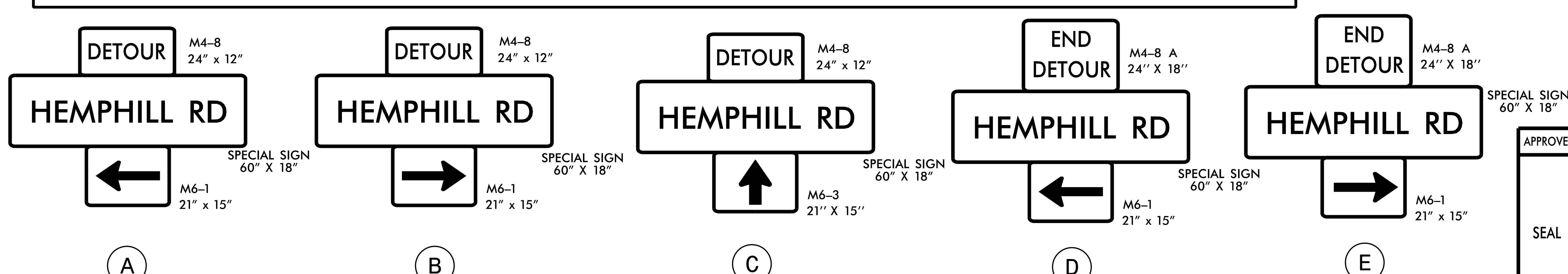

THE LOUIS BERGER GROUP, Inc.
1001 Wade Avenue, Suite 400
Raleigh, North Carolina 27605

APPROVED:__________ DATE:______

SEAL

NORTH CAROLINA PROFESSIONAL SEAL 16003 ENGINEER DEAN D. HATFIELD

DIVISION OF HIGHWAYS STATE OF NORTH CAROLINA DEPARTMENT OF TRANSPORTATION WORK ZONE TRAFFIC CONTROL

OFF SITE DETOUR ROUTE AND SIGNING PHASE I

$$$$SYSTIME$$$$ $$$$$$$$DGN$$$$$$$$$$$$$$$$$$$$$$$$ $$$$$$USERNAME$$$$

PROJ. REFERENCE NO.	SHEET NO.
17BP.14.R.39	TMP-2B

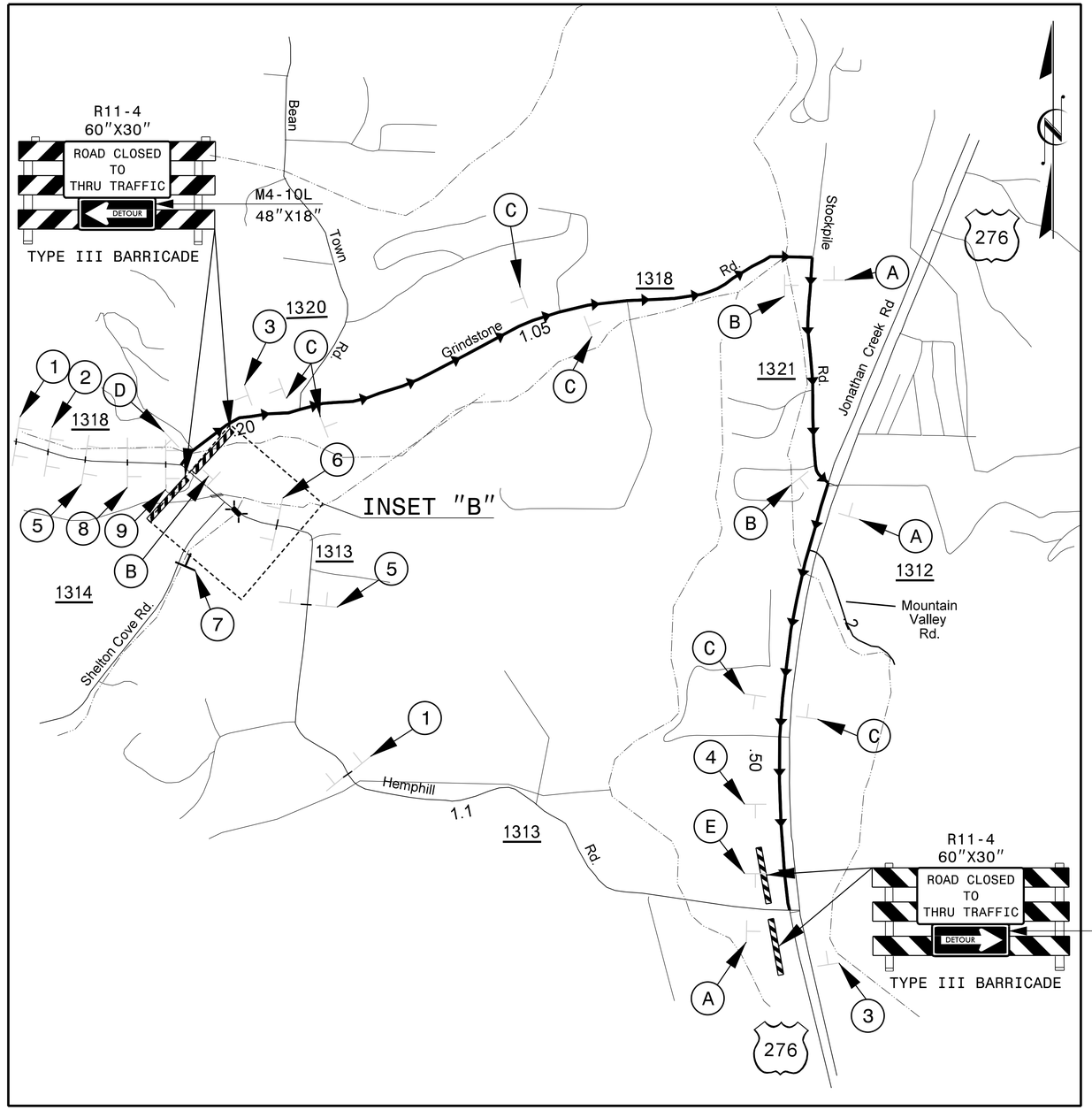

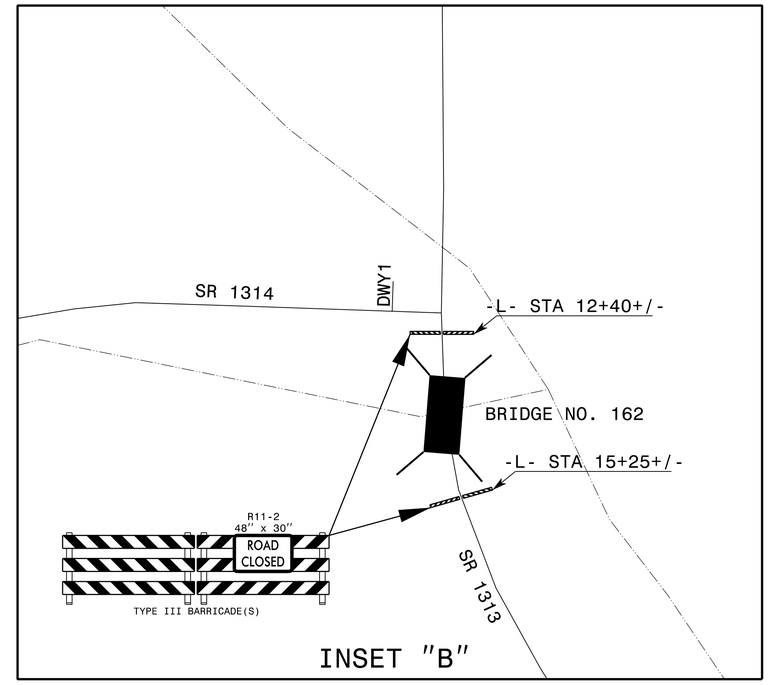

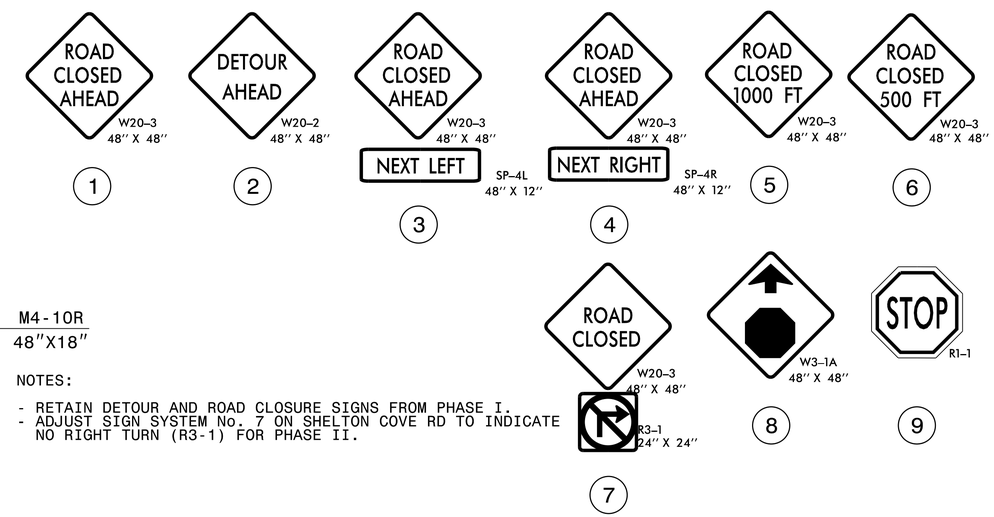

NOTES:

- RETAIN DETOUR AND ROAD CLOSURE SIGNS FROM PHASE I.
- ADJUST SIGN SYSTEM No. 7 ON SHELTON COVE RD TO INDICATE NO RIGHT TURN (R3-1) FOR PHASE II.

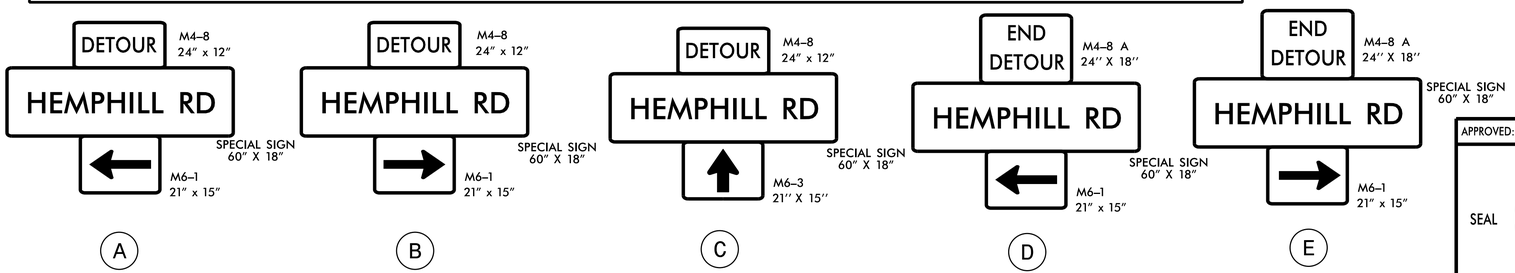

THE LOUIS BERGER GROUP, Inc.
1001 Wade Avenue, Suite 400
Raleigh, North Carolina 27605

APPROVED: _____ DATE: _____

SEAL

NORTH CAROLINA PROFESSIONAL SEAL 16003 ENGINEER DEAN D. HAIFIELD

DIVISION OF HIGHWAYS · STATE OF NORTH CAROLINA · DEPARTMENT OF TRANSPORTATION · WORK ZONE TRAFFIC CONTROL

OFF SITE DETOUR ROUTE AND SIGNING PHASE II

$$$$$SYSTIME$$$$$
$$$$$$$$$$$$$$$$$$DGN$$$$$$$$$$$$$$$$$$
$$$USERNAME$$$

STATE	PROJECT NO.	SHEET NO.	TOTAL SHTS.
N.C.	17BP.14.R.39	PMP-1	2

APPROVED: _____

DATE: _____

SEAL

NORTH CAROLINA PROFESSIONAL SEAL 16003 ENGINEER DEAN D. HAFFIELD

STATE OF NORTH CAROLINA
DEPARTMENT OF TRANSPORTATION

PAVEMENT MARKING PLANS

LOCATION: BRIDGE NO. 162 ON SR 1313 OVER BRANCH OF JONATHAN CREEK, HAYWOOD COUNTY

ROADWAY STANDARD DRAWINGS

THE FOLLOWING ROADWAY STANDARDS AS APPEAR IN "ROADWAY STANDARD DRAWINGS"-PROJECT SERVICES UNIT-N.C. DEPARTMENT OF TRANSPORTATION-RALEIGH, N.C., DATED JANUARY 2012 ARE APPLICABLE TO THIS PROJECT AND BY REFERENCE HEREBY ARE CONSIDERED A PART OF THESE PLANS:

STD. NO.	TITLE
903.10	GROUND MOUNTED SIGN SUPPORTS
904.10	ORIENTATION OF GROUND MOUNTED SIGNS
904.50	MOUNTING OF TYPE 'D', 'E' AND 'F' SIGNS ON 'U' CHANNEL POSTS
1205.01	PAVEMENT MARKINGS - LINE TYPES & OFFSETS
1205.02	PAVEMENT MARKINGS - 2 LANE & MULTILANE ROADWAYS
1205.04	PAVEMENT MARKINGS - INTERSECTIONS

PAVEMENT MARKING SCHEDULE

ASPHALT PAVEMENT DESIGN
(AS SHOWN)

PAVEMENT MARKING LINES

P4 - PAINT - WHITE STOPBAR (24")
PA - PAINT - WHITE EDGELINE (4")
PD - PAINT - 2 FT. WHITE MINISKIP (4")
PI - PAINT - YELLOW DOUBLE CENTER LINE (4")

GENERAL NOTES

THE FOLLOWING NOTES APPLY AT ALL TIMES FOR THE DURATION OF THE CONSTRUCTION PROJECT, EXCEPT WHEN NOTED IN THE PLAN, OR DIRECTED BY THE ENGINEER.

A) INSTALL PAVEMENT MARKINGS AND PAVEMENT MARKERS ON THE FINAL SURFACE AS FOLLOWS:

ASPHALT PAVEMENT DESIGN:

ROAD NAME	MARKING	MARKER
ALL	PAINT	NONE

B) TIE PROPOSED PAVEMENT MARKING LINES TO EXISTING PAVEMENT MARKING LINES.

C) REMOVE/ REPLACE ANY CONFLICTING/ DAMAGED PAVEMENT MARKINGS AND MARKERS.

D) PASSING ZONES WILL BE DETERMINED IN THE FIELD AND MUST BE APPROVED BY THE ENGINEER.

INDEX

SHEET NO.	DESCRIPTION
PMP-1	PAVEMENT MARKING PLAN COVER SHEET
PMP-2	PAVEMENT MARKING DETAIL

THE LOUIS BERGER GROUP, Inc.
1001 Wade Avenue, Suite 400
Raleigh, NC 27605-3322

ROADWAY PLANS

STATE	PROJECT NO.	SHEET NO.	TOTAL SHTS.
N.C.	17BP.14.R.39	PMP-2	2

0′ 20′ 40′

APPROVED: _____

DATE: _____

SEAL

NORTH CAROLINA PROFESSIONAL SEAL 16003 ENGINEER DEAN D. HAFFIELD

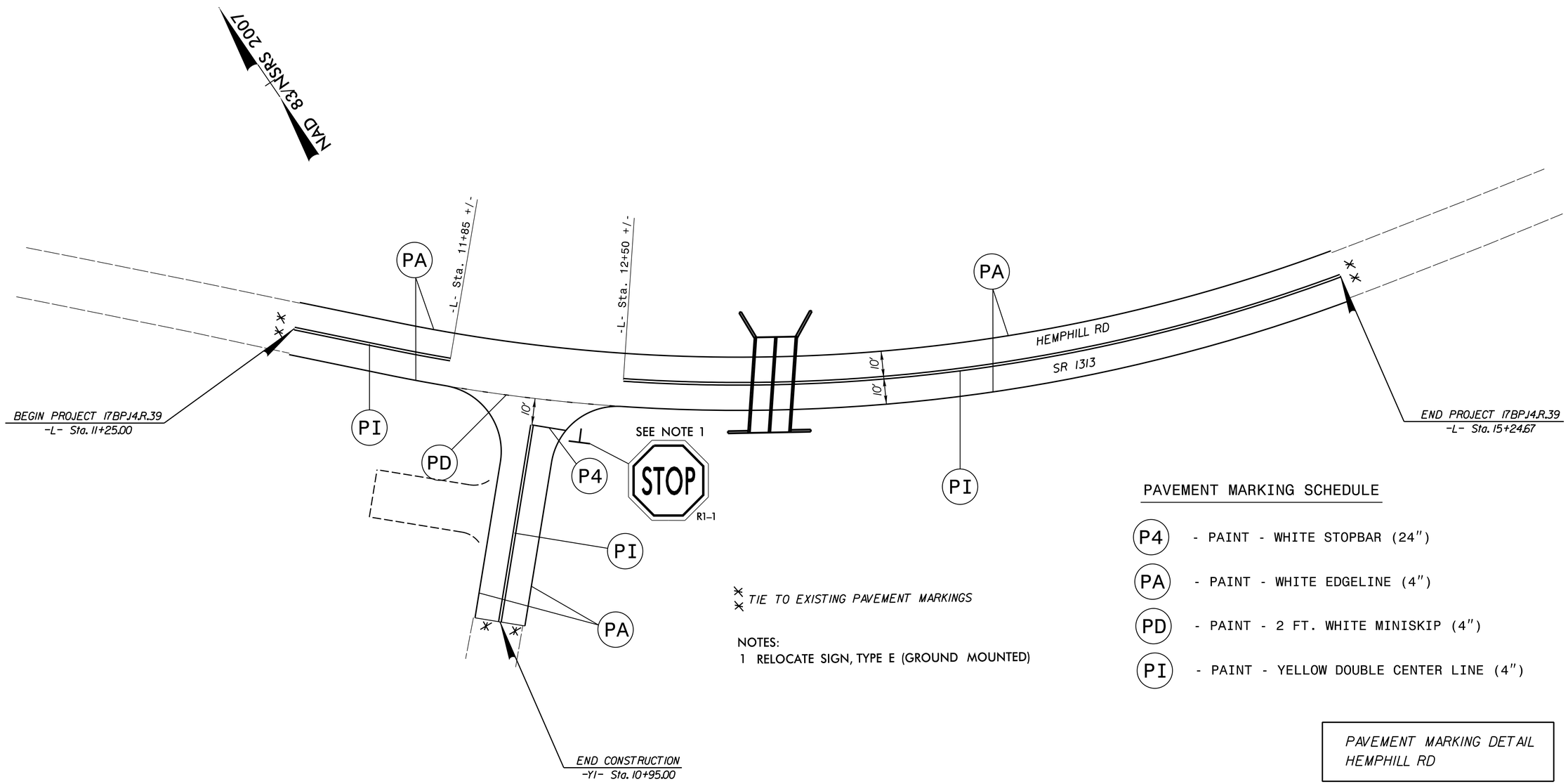

* TIE TO EXISTING PAVEMENT MARKINGS

NOTES:

1 RELOCATE SIGN, TYPE E (GROUND MOUNTED)

PAVEMENT MARKING SCHEDULE

P4	- PAINT - WHITE STOPBAR (24″)
PA	- PAINT - WHITE EDGELINE (4″)
PD	- PAINT - 2 FT. WHITE MINISKIP (4″)
PI	- PAINT - YELLOW DOUBLE CENTER LINE (4″)

PAVEMENT MARKING DETAIL
HEMPHILL RD

THE LOUIS BERGER GROUP, Inc.
1001 Wade Avenue, Suite 400
Raleigh, NC 27605-3322

ROADWAY PLANS

EROSION CONTROL PLANS

PROJECT REFERENCE NO.	SHEET NO.
17BPJ4.R.39	EC-01/CONST.04
R/W SHEET NO.	

0' 20' 40'

2012 STANDARD DRAWINGS

1604.01	Railroad Erosion Control Detail	1632.01	Rock Inlet Sediment Trap Type A
1605.01	Temporary Silt Fence	1632.02	Rock Inlet Sediment Trap Type B
1606.01	Special Sediment Control Fence	1632.03	Rock Inlet Sediment Trap Type C
1607.01	Gravel Construction Entrance	1633.01	Temporary Rock Silt Check Type A
1622.01	Temporary Berms and Slope Drains	1633.02	Temporary Rock Silt Check Type B
1630.01	Riser Basin	1634.01	Temporary Rock Sediment Dam Type A
1630.02	Silt Basin Type B	1634.02	Temporary Rock Sediment Dam Type B
1630.03	Temporary Silt Ditch	1635.01	Rock Pipe Inlet Sediment Trap Type A
1630.04	Stilling Basin	1635.02	Rock Pipe Inlet Sediment Trap Type B
1630.05	Temporary Diversion	1640.01	Coir Fiber Baffle
1630.06	Special Stilling Basin	1645.01	Temporary Stream Crossing
1631.01	Matting Installation		

Std. #	Description	Symbol
1605.01	Temporary Silt Fence	
1606.01	Special Sediment Control Fence	
1630.06	Special Stilling Basin	
1633.01	Temporary Rock Silt Check Type-A	
	Temporary Rock Silt Check Type-A with Matting and Polyacrylamide (PAM)	
	Wattle with Polyacrylamide (PAM)	

THESE EROSION AND SEDIMENT CONTROL PLANS COMPLY WITH THE REGULATIONS SET FORTH BY THE NCG-010000 GENERAL CONSTRUCTION PERMIT EFFECTIVE AUGUST 3, 2011 ISSUED BY THE NORTH CAROLINA DEPARTMENT OF ENVIRONMENT AND NATURAL RESOURCES DIVISION OF WATER QUALITY.

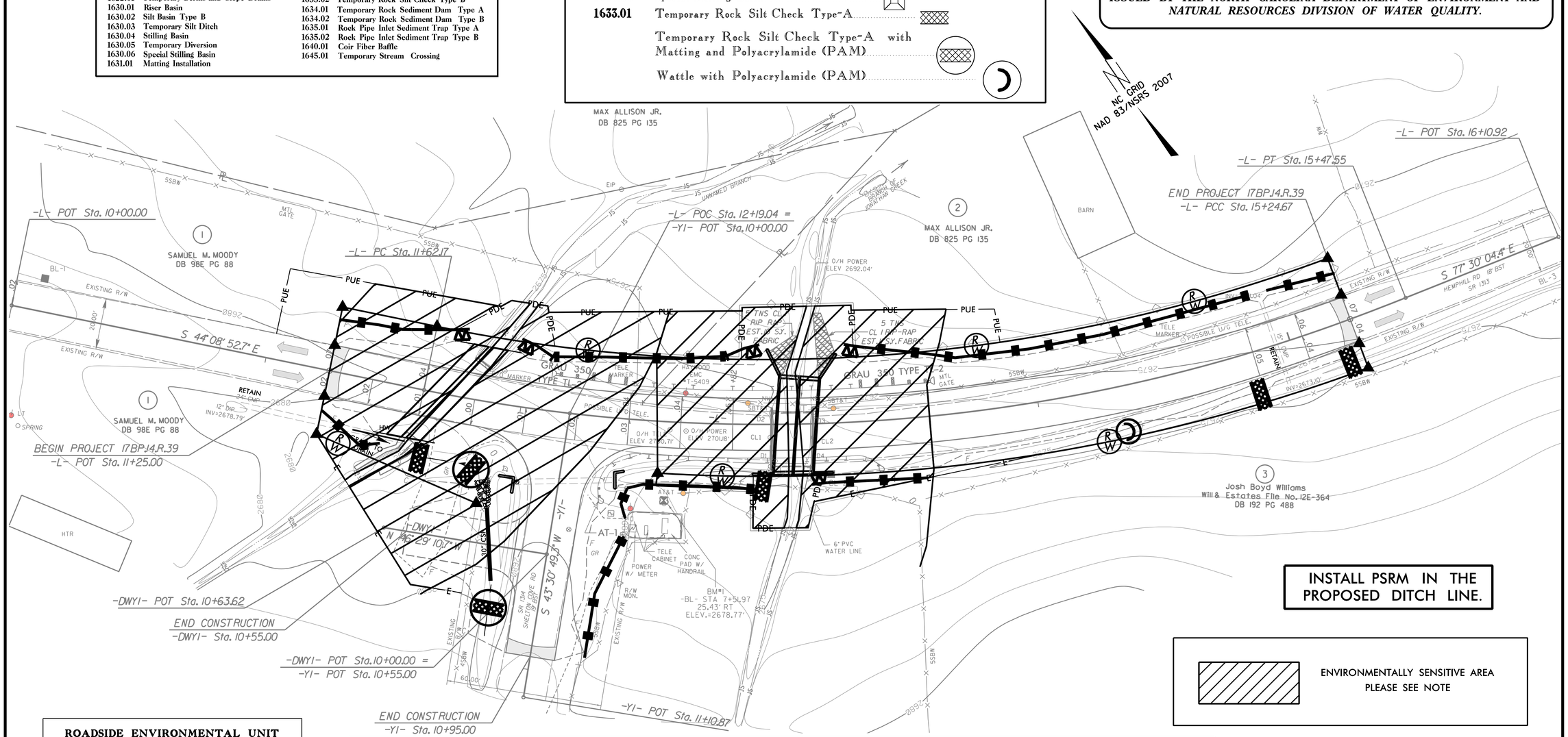

INSTALL PSRM IN THE PROPOSED DITCH LINE.

ENVIRONMENTALLY SENSITIVE AREA
PLEASE SEE NOTE

ROADSIDE ENVIRONMENTAL UNIT
DEPARTMENT OF TRANSPORTATION
DIVISION OF HIGHWAYS
RALEIGH, N.C.

2012 STANDARD SPECIFICATIONS

NOTE: ANY DEVIATION FROM OPTIONS GIVEN WILL REQUIRE PRIOR APPROVAL BY ENGINEER.

ADDITIONAL EROSION CONTROL DEVICES MAY NEED TO BE INSTALLED AS DIRECTED BY THE ENGINEER.

Environmentally Sensitive Areas:

This project is located in an "Environmentally Sensitive Area." This designation requires special procedures to be used for clearing and grubbing, temporary stream crossings, and grading operations within the area identified on the plans. This also requires special procedures to be used for seeding and mulching and staged seeding within the project.

Clearing and Grubbing:

In areas identified on the erosion control plans as "Environmentally Sensitive Areas", the Contractor may perform clearing operations, but not grubbing operations until immediately prior to beginning grading operations as described in Section 200, Article 200-1, in the Standard Specifications. The "Environmentally Sensitive Area" shall be defined as a 50 foot buffer zone on both sides of the stream (or depression), measured from top of streambank, (or center of depression). Only clearing operations (not grubbing) shall be allowed in this buffer zone until immediately prior to beginning grading operations. Erosion control devices shall be installed immediately following the clearing operation.

Grading:

Once grading operations begin in identified "Environmentally Sensitive Areas", work will progress in a continuous manner until complete. All construction within these areas must progress in a continuous manner such that each phase is complete and areas permanently stabilized prior to beginning of next phase. Failure on the part of the Contractor to complete any phase of construction in a continuous manner in "Environmentally Sensitive Areas" as specified will be just cause for the Engineer to direct the suspension of work in accordance with Section 108-7 of the Standard Specifications.

Temporary Stream Crossings:

Any crossing of streams within the limits of this project must be accomplished in accordance with Section 107-13(b) of the Standard Specifications.

Seeding and Mulching:

Seeding and mulching shall be performed in accordance with Section 1660 of the Standard Specifications and vegetative cover sufficient to restrain erosion shall be installed immediately following grade establishment.

Seeding and mulching shall be performed on the areas disturbed by construction immediately following final grade establishment. No appreciable time shall lapse into the contract time without stabilization of slopes, ditches and other areas within the "Environmentally Sensitive Areas" as indicated on the erosion control plans.

Stage Seeding:

The work covered by this section shall consist of the establishment of a vegetative cover on cut and fill slopes as grading progresses. Seeding and mulching shall be done in stages on cut and fill slopes which are greater than 20 feet in height measured along the slope, or greater than 2 acres in area. Each stage shall not exceed the limits stated above.

Rana Stansell, PE
LEVEL III A: Designer of Erosion and Sediment Control Plans
Certification Number: 635

SEE SHEET 5 FOR PROFILE

THE LOUIS BERGER GROUP, Inc.
1001 Wade Avenue, Suite 400
Raleigh, NC 27605-3322

ROADWAY PLANS

REVISIONS

5/29/2013 9:43:40 AM
G:\OR Projects\OR1100 - NCDOT Group W\430162_Roadway\Proj\430162_RDY_08_EC_01.dgn
G:\CADD\Plot\OR1100\1100_rdy_EC.tbl

STATE OF NORTH CAROLINA
DIVISION OF HIGHWAYS

SOIL STABILIZATION TIMEFRAMES

SITE DESCRIPTION	STABILIZATION TIME	TIMEFRAME EXCEPTIONS
PERIMETER DIKES, SWALES, DITCHES AND SLOPES	7 DAYS	NONE
HIGH QUALITY WATER (HQW) ZONES	7 DAYS	NONE
SLOPES STEEPER THAN 3:1	7 DAYS	IF SLOPES ARE 10' OR LESS IN LENGTH AND ARE NOT STEEPER THAN 2:1, 14 DAYS ARE ALLOWED.
SLOPES 3:1 OR FLATTER	14 DAYS	7 DAYS FOR SLOPES GREATER THAN 50' IN LENGTH.
ALL OTHER AREAS WITH SLOPES FLATTER THAN 4:1	14 DAYS	NONE, EXCEPT FOR PERIMETERS AND HQW ZONES.

REVISIONS

2/18/2013 7:36:02 AM
G:\DR Projects\DR1100 - NCDOT Group W\430162\Roadway\Proj\430162_RDY_08_EC_02.dgn
G:\CADD\Plot\DR1100\1100_rdy_EC.tbl

PROJECT REFERENCE NO.	SHEET NO.
17BP.14.R.39	EC-03

WATTLE WITH POLYACRYLAMIDE (PAM) DETAIL

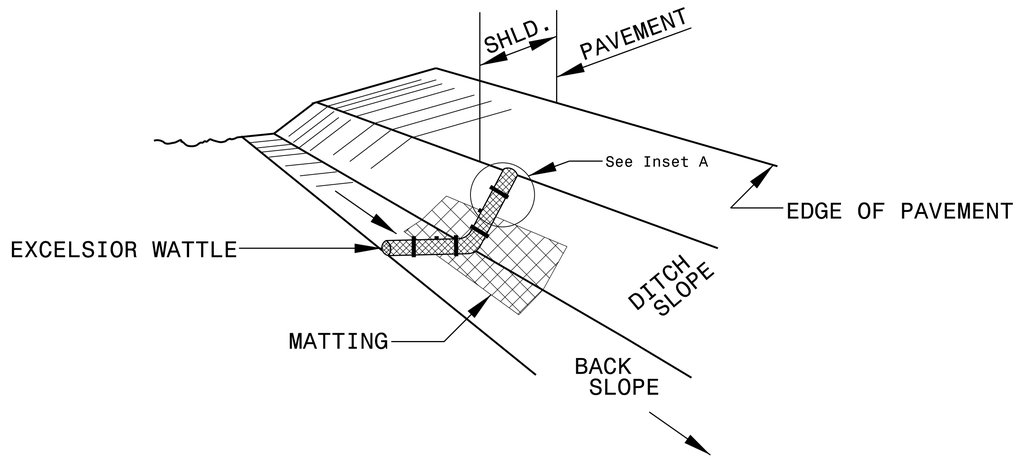

ISOMETRIC VIEW

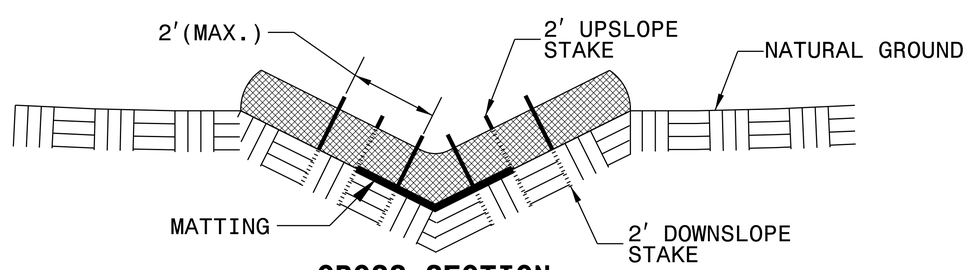

CROSS SECTION VEE DITCH

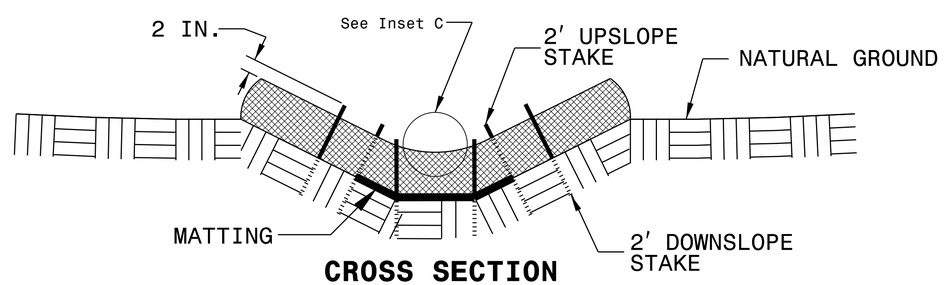

CROSS SECTION TRAPEZOIDAL DITCH

NOTES:

USE MINIMUM 12 IN. DIAMETER EXCELSIOR WATTLE.

USE 2 FT. WOODEN STAKES WITH A 2 IN. BY 2 IN. NOMINAL CROSS SECTION.

ONLY INSTALL WATTLE(S) TO A HEIGHT IN DITCH SO FLOW WILL NOT WASH AROUND WATTLE AND SCOUR DITCH SLOPES AND AS DIRECTED.

INSTALL A MINIMUM OF 2 UPSLOPE STAKES AND 4 DOWNSLOPE STAKES AT AN ANGLE TO WEDGE WATTLE TO BOTTOM OF DITCH.

PROVIDE STAPLES MADE OF 0.125 IN. DIAMETER STEEL WIRE FORMED INTO A U SHAPE NOT LESS THAN 12" IN LENGTH.

INSTALL STAPLES APPROXIMATELY EVERY 1 LINEAR FOOT ON BOTH SIDES OF WATTLE AND AT EACH END TO SECURE IT TO THE SOIL.

INSTALL MATTING IN ACCORDANCE WITH SECTION 1631 OF THE STANDARD SPECIFICATIONS.

PRIOR TO POLYACRYLAMIDE (PAM) APPLICATION, OBTAIN A SOIL SAMPLE FROM PROJECT LOCATION, AND FROM OFFSITE MATERIAL, AND ANALYZE FOR APPROPRIATE PAM FLOCCULANT TO BE APPLIED TO EACH WATTLE.

INITIALLY APPLY 2 OUNCES OF ANIONIC OR NEUTRALLY CHARGED PAM OVER WATTLE WHERE WATER WILL FLOW AND 1 OUNCE OF PAM ON MATTING ON EACH SIDE OF WATTLE. REAPPLY PAM AFTER EVERY RAINFALL EVENT THAT IS EQUAL TO OR EXCEEDS 0.50 IN.

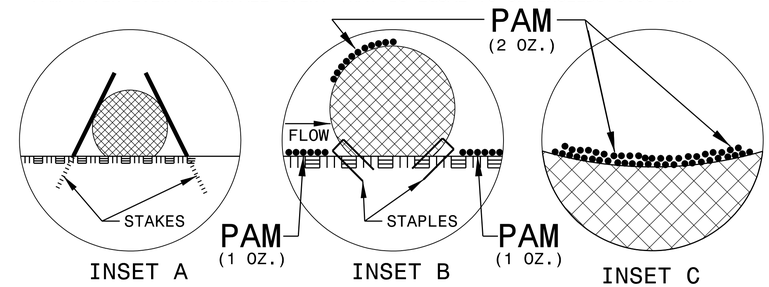

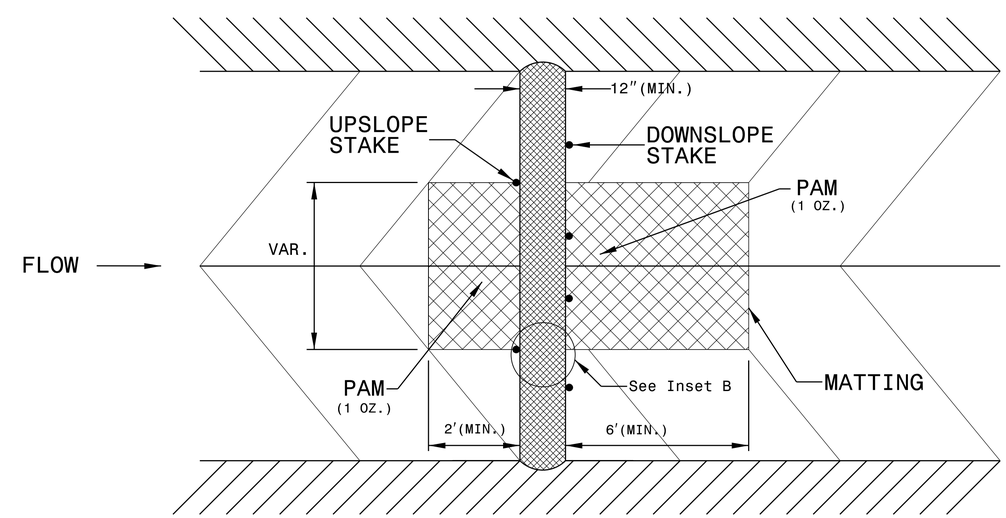

TOP VIEW

THE LOUIS BERGER GROUP, Inc.
1001 Wade Avenue, Suite 400
Raleigh, NC 27605-3322

ROADWAY PLANS

REVISIONS

2/18/2013 7:36:04 AM
G:\DR Projects\DR1100 - NCDOT Group W\430162\Roadway\Proj\430162_RDY_08_EC_03.dgn
G:\CADD\Plot\DR1100\1100_rdy_EC.tbl

PROJECT REFERENCE NO.	SHEET NO.
17BP.14.R.39	EC-04

TEMPORARY ROCK SILT CHECK TYPE 'A' WITH EXCELSIOR MATTING AND POLYACRYLAMIDE (PAM)

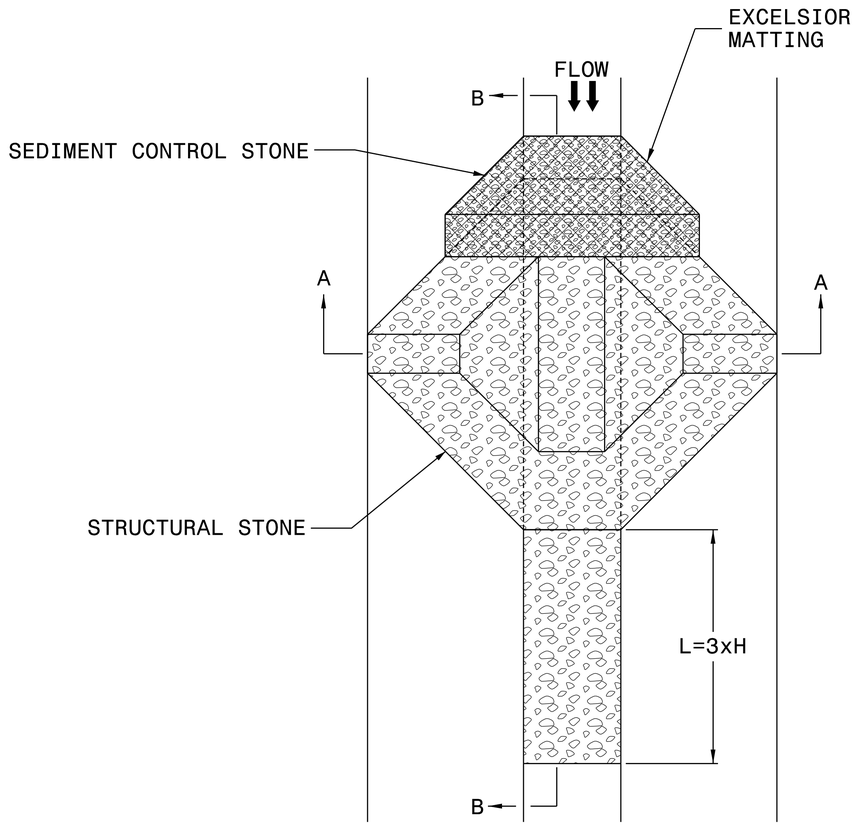

PLAN

NOTES

USE EXCELSIOR FOR MATTING MATERIAL AND ANCHOR MATTING SECTION AT TOP AND BOTTOM WITH CLASS B STONE.

PRIOR TO POLYACRYLAMIDE (PAM) APPLICATION, OBTAIN A SOIL SAMPLE FROM PROJECT LOCATION, AND FROM OFFSITE MATERIAL, AND ANALYZE FOR APPROPRIATE PAM FLOCCULANT TO BE APPLIED TO EACH ROCK SILT CHECK.

INITIALLY APPLY 3.5 OUNCES OF POLYACRYLAMIDE (PAM) TO TOP OF MATTING SECTION AND AFTER EVERY RAINFALL EVENT THAT EQUALS OR EXCEEDS 0.50 INCHES.

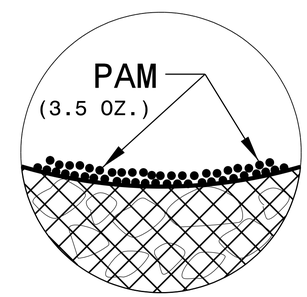

INSET A

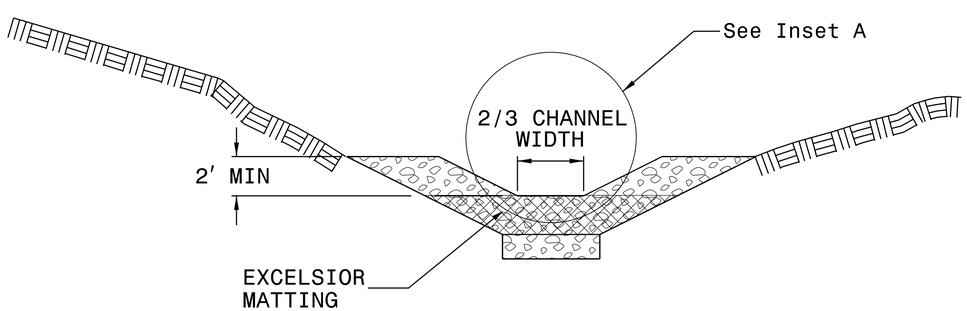

SECTION A-A

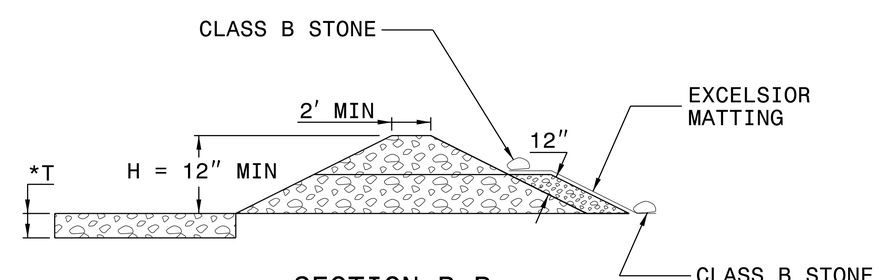

SECTION B-B

*T = 12" MIN., 18" MAX.

NOT TO SCALE

THE LOUIS BERGER GROUP, Inc.
1001 Wade Avenue, Suite 400
Raleigh, NC 27605-3322

ROADWAY PLANS

REVISIONS

2/18/2013 7:36:06 AM
G:\OR Projects\OR1100 - NCDOT Group W\430162\Roadway\Proj\430162_RDY_08_EC_04.dgn
G:\CADD\Plot\OR1100\1100_rdy_EC.tbl

PROJECT REFERENCE NO.	SHEET NO.
17BP.14.R.39	EC-05

ARCH PIPE CONSTRUCTION SEQUENCE STA. 11+70 –L–

PHASE I

1) INSTALL IMPERVIOUS DIKE UPSTREAM AND DOWNSTREAM OF EXISTING PIPE AS SHOWN
2) DEWATER WORK AREA UTILIZING SPECIAL STILLING BASIN
3) REMOVE WINGWALL
4) INSTALL PROPOSED 57"x38" CMAP, WINGWALLS, & BANK WORK
5) REMOVE IMPERVIOUS DIKE

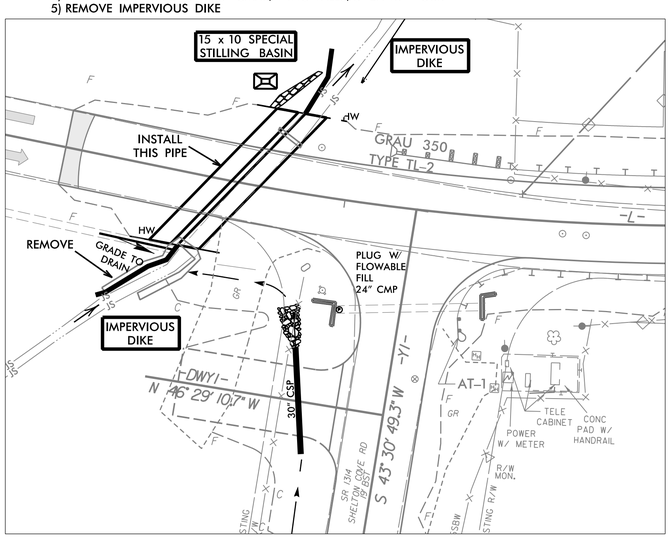

PHASE II

1) INSTALL IMPERVIOUS DIKE UPSTREAM AND DOWNSTREAM OF EXISTING PIPE AS SHOWN
2) DEWATER WORK AREA UTILIZING SPECIAL STILLING BASIN
3) REMOVE EXISTING PIPE AND INSTALL PROPOSED 57"x38" CMAP, WINGWALLS, & BANK WORK
4) REMOVE IMPERVIOUS DIKE

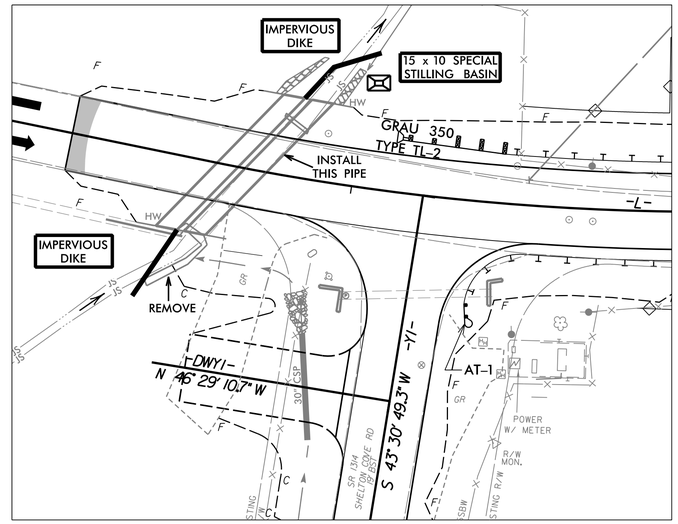

Impervious Dike:

The work covered by this section consists of furnishing, installing, maintaining, and removing an impervious dike for the purpose of diverting normal stream flow around the construction site. The Contractor shall construct an impervious dike in such a manner approved by the Engineer. The impervious dike shall not permit seepage of water into the construction site or contribute to siltation of the stream. The impervious dike shall be constructed of an acceptable material in the locations noted on the plans or as directed by the Engineer.

Acceptable materials shall include but not be limited to sheet piles, sandbags, and/or the placement of an acceptable size stone lined with polypropylene or other impervious fabric.

Earth material shall not be used to construct an impervious dike when it is in direct contact with the stream unless vegetation can be established before contact with the stream takes place.

CULVERT CONSTRUCTION SEQUENCE STA. 13+06 –L–

PHASE I

1) INSTALL IMPERVIOUS DIKE UPSTREAM AND DOWNSTREAM OF EXISTING BRIDGE OPENING AS SHOWN
2) DEWATER WORK AREA UTILIZING SPECIAL STILLING BASIN
3) REMOVE EXISTING BRIDGE AND CONSTRUCT 1st CELL OF PROPOSED 2–7'x5' RCBC, WINGWALLS, & BANK WORK
4) REMOVE IMPERVIOUS DIKES

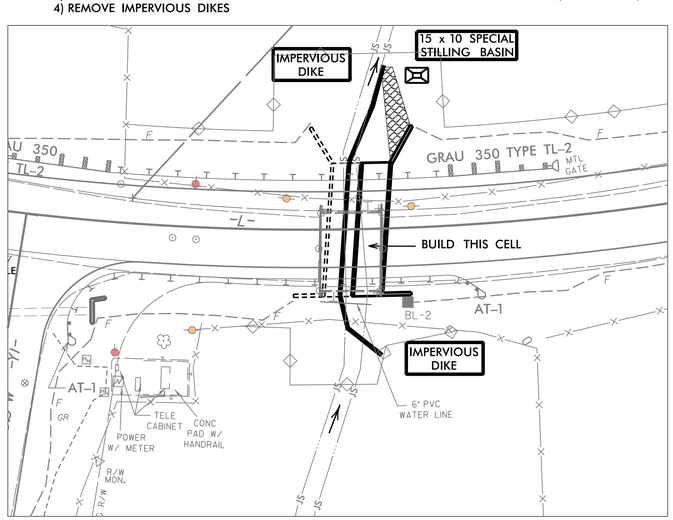

PHASE II

1) INSTALL IMPERVIOUS DIKE UPSTREAM AND DOWNSTREAM OF EXISTING BRIDGE AS SHOWN
2) DEWATER WORK AREA UTILIZING SPECIAL STILLING BASIN
3) CONSTRUCT 2nd CELL OF PROPOSED 2–7'x5' RCBC, WINGWALLS, FLOOD PLAIN BENCHES & BANK WORK
4) REMOVE IMPERVIOUS DIKES

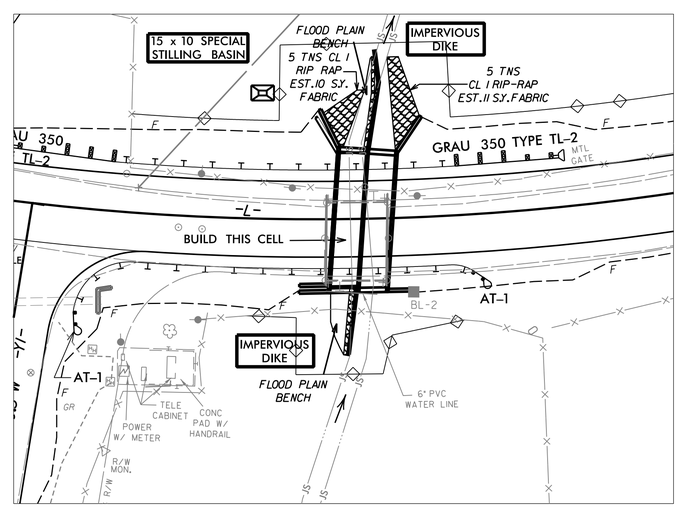

REVISIONS

5/29/2013 9:43:43 AM
G:\OR Projects\OR1100 - NCDOT Group W\430162\Roadway\Proj\430162_RDY_08_EC_05.dgn
G:\CADD\Plot\OR1100\1100-rdy_EC.tbl

THE LOUIS BERGER GROUP, Inc.
1001 Wade Avenue, Suite 400
Raleigh, NC 27605-3322

ROADWAY PLANS

PROJECT: 17BP.14.R.39

CONTRACT: 6300029465

STATE OF NORTH CAROLINA
DIVISION OF HIGHWAYS

T.I.P. NO.	SHEET NO.
17BP.14.R.39	UO-1

UTILITIES BY OTHERS PLANS
HAYWOOD COUNTY

LOCATION: BRIDGE NO. 162 ON SR 1313 OVER BRANCH OF JONATHAN CREEK

TYPE OF WORK: AERIAL UTILITIES AND UTILITY CONSTRUCTION (BY OTHERS)

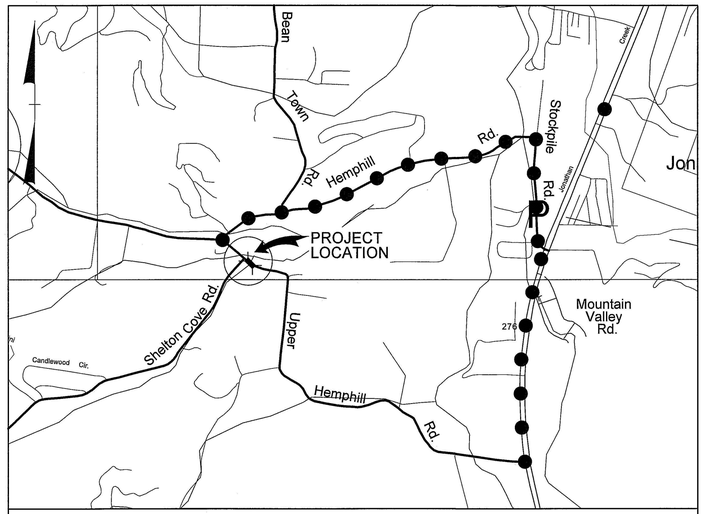

VICINITY MAP NTS

OFF-SITE DETOUR

All materials, equipment, labor, and workmanship shall be in accordance with and subject to the Water and Sewer Authority of Haywood County's standard specifications; and the North Carolina Administrative Code for wastewater collection and water distribution systems. In the event of conflict between Water and Sewer Authority of Haywood County's standard specifications; or the North Carolina Administrative Code, the more restrictive requirements shall apply.

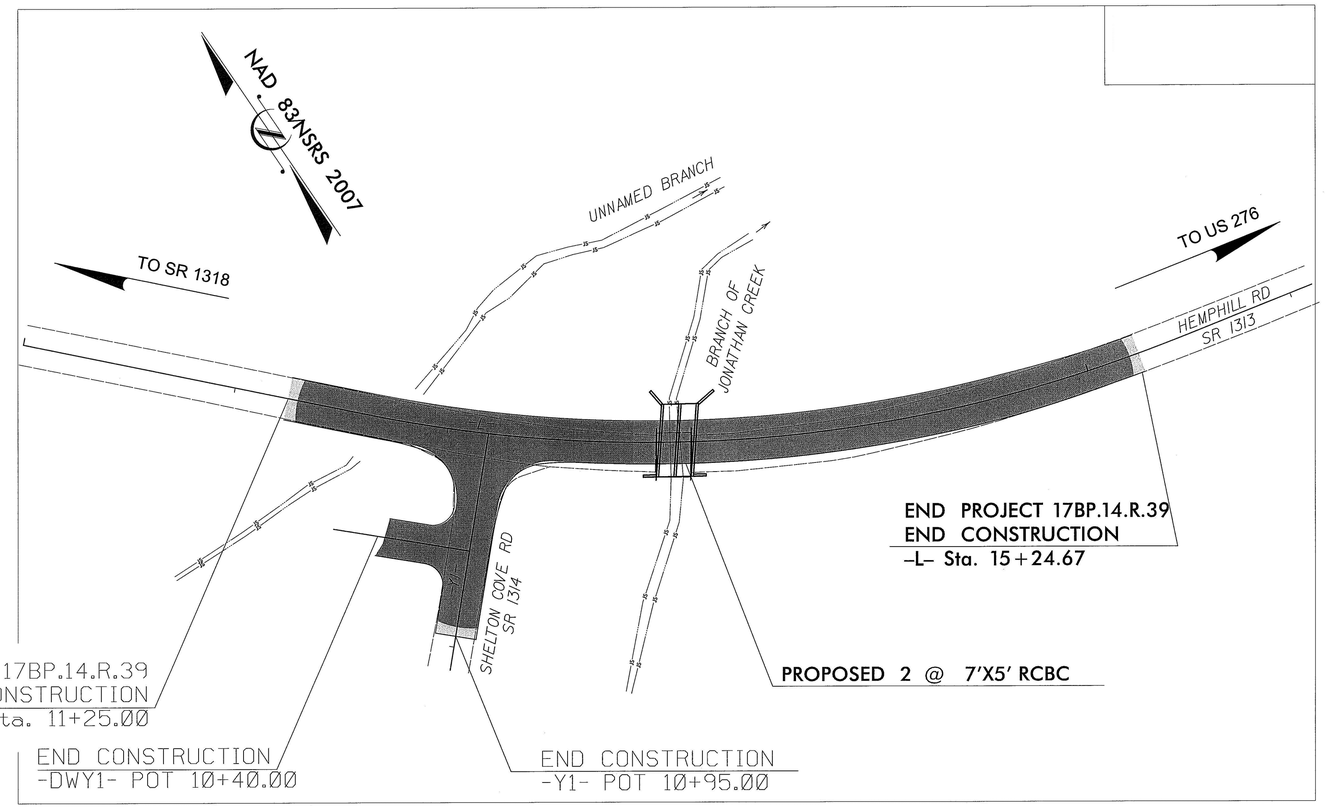

GRAPHIC SCALES

20 10 0 20 40
PLANS

20 10 0 20 40
PROFILE (HORIZONTAL)

5 2.5 0 5 10
PROFILE (VERTICAL)

INDEX OF SHEETS

SHEET NO.	DESCRIPTION
UO-1	TITLE SHEET
UO-2	SYMBOLOGY SHEET
UO-3	UTILITY PLAN AND PROFILE SHEET
UO-4	UTILITY DETAILS AND CONSTRUCTION NOTES
UO-5	UTILITIES BY OTHERS PLAN SHEET

UTILITY OWNERS ON PROJECT

(1) POWER – HAYWOOD EMC: Wayne Nichols (828)-506-0170

(2) TELEPHONE – AT&T: Scott Addington (828) 258-7138

(3) CABLE – CAROLINA MOUNTAIN CABLEVISION: Terry Sersland (828) 507-6472

(4) WATER – MAGGIE VALLEY SANITARY DISTRICT Neil Carpenter (828) 926-0145

(5) SEWER – MAGGIE VALLEY SANITARY DISTRICT Neil Carpenter (828) 926-0145

PLANS PREPARED BY:

CH ENGINEERING
3220 GLEN ROYAL RD. RALEIGH, NC 27617
TELE 919.788.0224 FAX 919.788.0232
NC LICENSE #P-0189

UTILITIES PROJECT ENGINEER

Eric Tweed, P.E.

PREPARED IN THE OFFICE OF:
DIVISION OF HIGHWAYS
UTILITIES UNIT
UTILITIES ENGINEERING
1591 MAIL SERVICES CENTER
RALEIGH NC 27699-1591
PHONE (919) 707-6690
FAX (919) 250-4151

Roger Worthington, P.E. UTILITIES SECTION ENGINEER

5/29/2013
$FILEL$
$PENTBLS$

5/14/99

STATE OF NORTH CAROLINA
DIVISION OF HIGHWAYS

CH ENGINEERING
3220 GLEN ROYAL RD. RALEIGH, NC 27617
TELE 919.788.0224 FAX 919.788.0232
NC LICENSE #P-0189

PROJECT REFERENCE NO.	SHEET NO.
17BP.14.R.39	UO-2
BRIDGE NO. 162	

UTILITIES PLAN SHEET SYMBOLS

PROPOSED WATER SYMBOLS

- Water Line (Sized as Shown)
- 11¼ Degree Bend
- 22½ Degree Bend
- 45 Degree Bend
- 90 Degree Bend
- Plug
- Tee
- Cross
- Reducer
- Gate Valve — GV
- Butterfly Valve — BV
- Tapping Valve — TGV
- Line Stop — LS
- Line Stop with Bypass — LS/BP
- Blow Off — BO
- Fire Hydrant — PFH
- Relocate Fire Hydrant — REH
- Remove Fire Hydrant — REM FH
- Water Meter — PWM
- Relocate Water Meter — RWM
- Remove Water Meter — REM WM
- Water Pump Station — PS(W)
- RPZ Backflow Preventer — PRPZ
- DCV Backflow Preventer — PBFP
- Relocate RPZ Backflow Preventer — RRPZ
- Relocate DCV Backflow Preventer — RBFP

PROPOSED SEWER SYMBOLS

- Gravity Sewer Line (Sized as Shown)
- Force Main Sewer Line (Sized as Shown)
- Manhole (Sized per Note)
- Sewer Pump Station — PS(SS)

PROPOSED MISCELLANOUS UTILITIES SYMBOLS

- Power Pole
- Telephone Pole
- Joint Use Pole
- Telephone Pedestal — TEL PED
- Utility Line by Others (Type as Shown)
- Trenchless Installation
- Encasement by Open Cut
- Encasement
- Thrust Block
- Air Release Valve — AR
- Utility Vault — UV
- Concrete Pier — CP
- Steel Pier — SP
- Plan Note — NOTE
- Pay Item Note — PAY ITEM

EXISTING UTILITIES SYMBOLS

- Power Pole
- Telephone Pole
- Joint Use Pole
- Utility Pole
- Utility Pole with Base
- H-Frame Pole
- Power Transmission Line Tower
- Water Manhole
- Power Manhole
- Telephone Manhole
- Sanitary Sewer Manhole
- Hand Hole for Cable
- Power Transformer
- Telephone Pedestal
- CATV Pedestal
- Gas Valve
- Gas Meter
- Located Miscellaneous Utility Object
- Abandoned According to Utility Records — AATUR
- End of Information — E.O.I.
- *Underground Power Line
- *Underground Telephone Cable
- *Underground Telephone Conduit
- *Underground Fiber Optics Telephone Cable
- *Underground TV Cable
- *Underground Fiber Optics TV Cable
- *Underground Gas Pipeline
- Aboveground Gas Pipeline — A/G Gas
- *Underground Water Line
- Aboveground Water Line — A/G Water
- *Underground Gravity Sanitary Sewer Line
- Aboveground Gravity Sanitary Sewer Line — A/G Sanitary Sewer
- *Underground SS Forced Main Line
- Underground Unknown Utility Line
- SUE Test Hole
- Water Meter
- Water Valve
- Fire Hydrant
- Sanitary Sewer Cleanout

*For Existing Utilities

- Utility Line Drawn from Record (Type as Shown)
- Designated Utility Line (Type as Shown)

5/29/2013
ETWEE30162_SYM_UC-2.dgn

REV: 2/1/2012

THE LOUIS BERGER GROUP, Inc.
1001 Wade Avenue, Suite 400
Raleigh, North Carolina 27605

CH ENGINEERING
3220 GLEN ROYAL RD. RALEIGH, NC 27617
TELE 919.788.0224 FAX 919.788.0232
NC LICENSE #P-0189

PROJECT REFERENCE NO.	SHEET NO.
17BP.14.R.39	UO-3
BRIDGE 162	UTILITY ENGINEER

NORTH CAROLINA PROFESSIONAL SEAL 28912 ENGINEER ERIC M. TREED
5-29-13

GRAPHIC SCALES

PLANS: 20 10 0 20 40
PROFILE (HORIZONTAL): 20 10 0 20 40
PROFILE (VERTICAL): 5 2.5 0 5 10

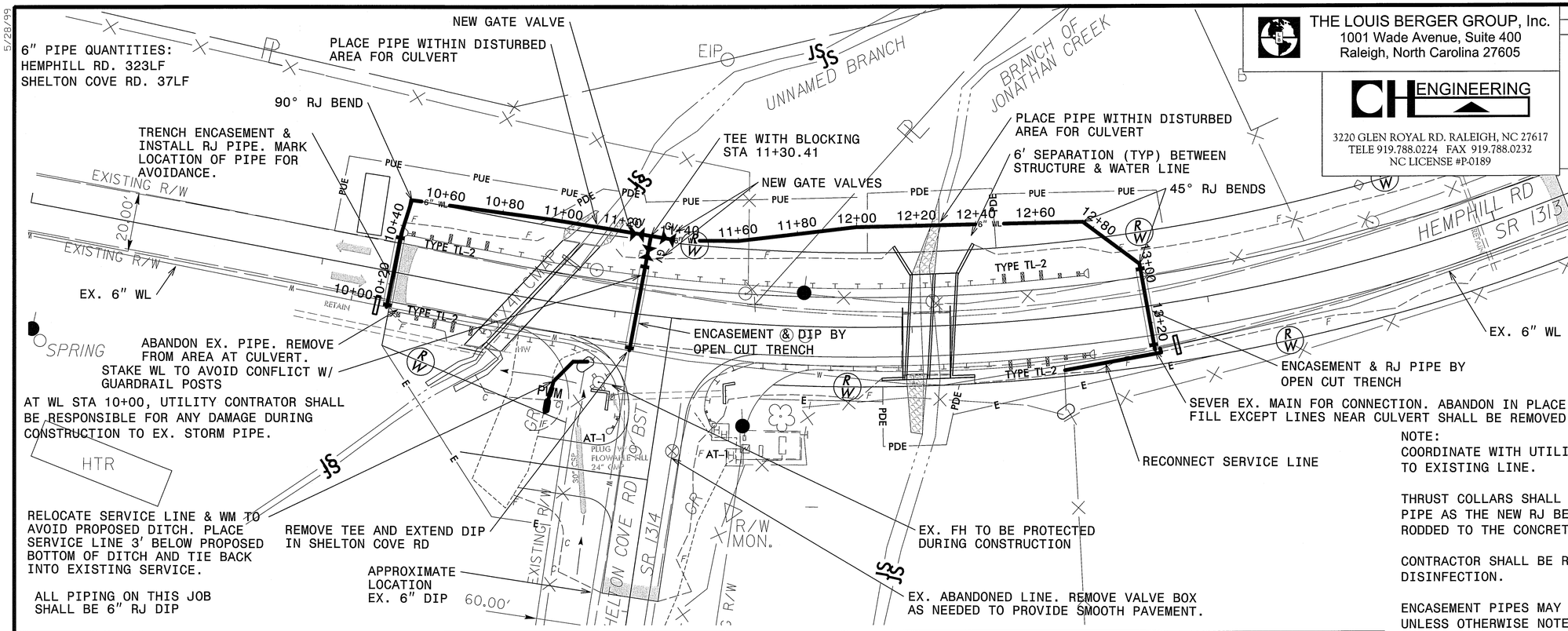

NOTE:
COORDINATE WITH UTILITY OWNER FOR MAKING TIES TO EXISTING LINE.

THRUST COLLARS SHALL BE ON THE SAME JOINT OF PIPE AS THE NEW RJ BEND OR THE BEND SHALL BE RODDED TO THE CONCRETE COLLAR.

CONTRACTOR SHALL BE RESPONSIBLE FOR TESTING AND DISINFECTION.

ENCASEMENT PIPES MAY BE INSTALLED BY OPEN CUT UNLESS OTHERWISE NOTED AND SHALL BE PER DOT STANDARDS.

ALL STREAM CROSSINGS COVERED UNDER 401-404 PERMIT FOR THE BRIDGE RELOCATION.

CONTRACTOR SHALL MINIMIZE SERVICE INTERRUPTIONS DURING INSTALLATION OF UTILITIES.

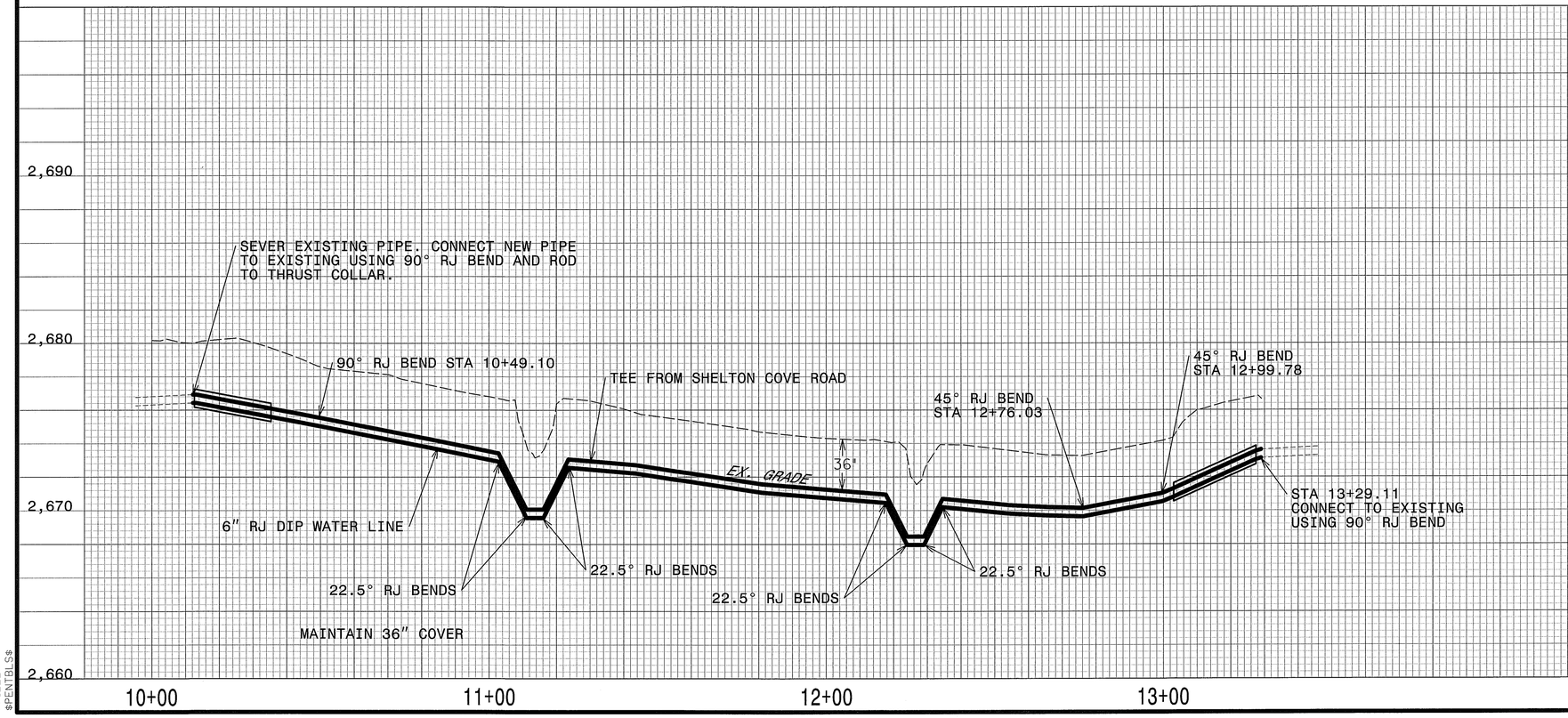

5/28/99
5/29/2013 $TIME$
$FILEL$
$PENTBL$

PROJECT REFERENCE NO.	SHEET NO.
17BP.14.R.39	UO-4
BRIDGE NO.	162

UTILITY ENGINEER

NORTH CAROLINA PROFESSIONAL SEAL 028812 ENGINEER ERIC M. TWEED

5-29-13

CH ENGINEERING

3220 GLEN ROYAL RD. RALEIGH, NC 27617
TELE 919.788.0224 FAX 919.788.0232
NC LICENSE #P-0189

NOTES:

1. CONCRETE SHALL BE 3,000 PSI MIN.
2. CONCRETE FOR THRUST BLOCKING SHALL BE KEPT FAIRLY DRY. THUS MAKING THE CONCRETE WEDGE SHAPE MORE EASILY FORMED WITH THE WIDEST PART (BLOCKING AREA) AGAINST UNDISTURBED SOIL.
3. NO CONCRETE SHALL COVER ANY BOLTS OR GLANDS.
4. ALL FITTING AND ACCESSORIES TO BE WRAPPED WITH 10 MIL POLYETHYLENE PRIOR TO POURING BLOCKING.
5. VOLUME OF THRUST BLOCKING SHALL BE AS SHOWN ON THE THRUST BLOCKING SCHEDULE.

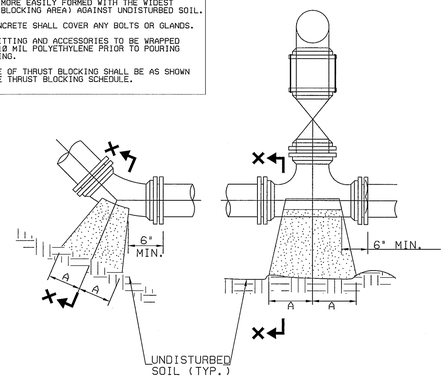

PLAN BENDS

HYDRANT TEE PLAN TEES

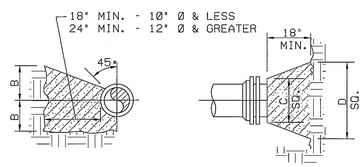

SECTION X-X BENDS & TEES

PLAN & ELEV. PLUGS

PIPE SIZE	90° BEND		45° BEND		22 • °BEND		11 • °BEND		TEE		PLUG	
	A	B	A	B	A	B	A	B	A	B	C	D
4"	8"	12"	8"	8"	6"	6"	6"	6"	8"	9"	10"	16"
6"	10"	12"	8"	10"	8"	8"	8"	8"	10"	10"	12"	18"
8"	15"	13"	10"	10"	8"	8"	8"	8"	10"	12"	12"	24"
10"	16"	14"	10"	12"	6"	10"	6"	10"	11"	14"	14"	25"
12"	20"	16"	12"	14"	8"	12"	8"	12"	14"	16"	16"	30"
14"	22"	18"	14"	16"	10"	14"	10"	14"	16"	18"	18"	34"
16"	26"	20"	16"	18"	12"	16"	12"	16"	18"	20"	20"	36"

THRUST BLOCK DETAIL

NOT TO SCALE

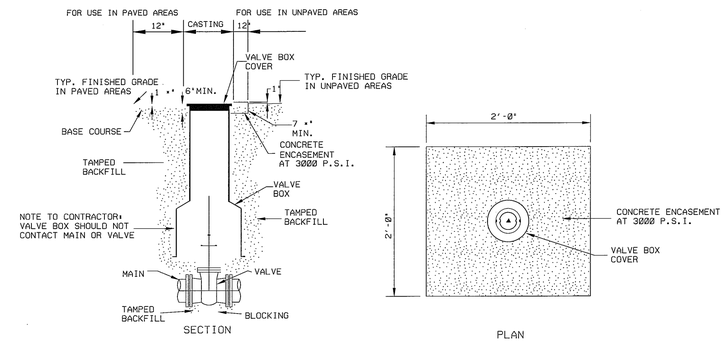

NOTES:

1. D.I.P. MAY BE USED FOR VALVE BOX EXTENSIONS.

VALVE AND VALVE BOX INSTALLATION

NOT TO SCALE

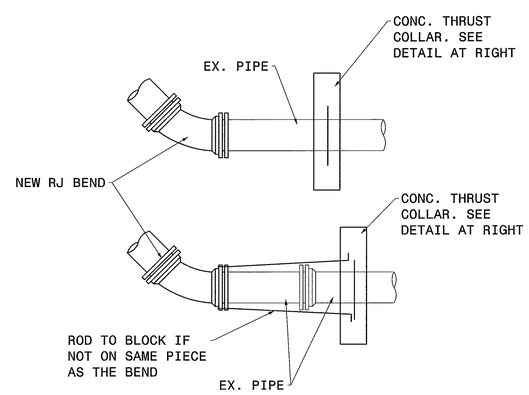

RODS SHALL BE SAME Ø AS BOLTS SUPPLIED WITH THE BEND.

PIPE CONNECTION DETAIL

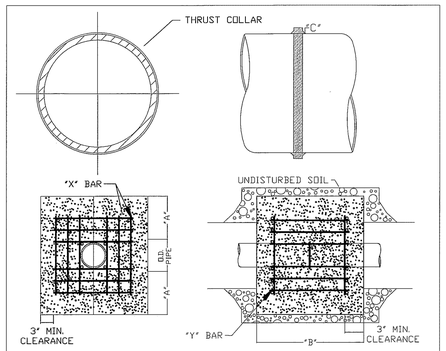

REINFORCING REQUIREMENTS

I.D. PIPE	REBAR SIZE	"X" BAR LENGTH	"X" BAR WEIGHT	"Y" BAR LENGTH	"Y" BAR WEIGHT	NO. REQUIRED
6" - 36"	#5	2'-2" • O.D. PIPE	1043 LBS/FT	1'-1"	11 LBS. EACH	X-24, Y-12
48" & greater	#6	3'-0" • O.D. PIPE	1502 LBS/FT	1'-3"	19 LBS. EACH	X-24, Y-12

THRUST COLLAR, AND THRUST SCHEDULE

I.D. PIPE	"A"	"B"	"C"6"-16", 20"-24", 30"-36", 48"
6" - 36"	1'-4"	1'-7"	2" 3" 4" 6"
48" & greater	1'-8"	1'-9"	

NOTES:

1. CONCRETE SHALL BE 3000 PSI AND TRANSIT MIXED.
2. REINFORCING BARS SHALL BE TIED TOGETHER.
3. TRENCH BOTTOM WIDTH IN VICINITY OF THRUST BLOCK INSTALLATION SHALL BE THE MINIMUM WIDTH
4. THRUST COLLAR MAY BE RJ COLLAR

CONCRETE THRUST COLLAR DESIGN DATA FOR WATER MAINS

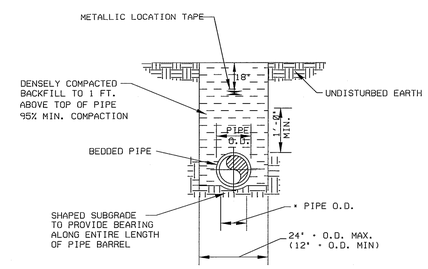

WATER MAINS 8" AND SMALLER SHALL HAVE A MINIMUM OF 3' OF COVER.

PIPE LAYING CONDITION

NOT TO SCALE

THE LOUIS BERGER GROUP, Inc.
1001 Wade Avenue, Suite 400
Raleigh, NC 27605-3322

UTILITY PLANS

REVISIONS

5/29/2013 $TIME$
$FILEL$
$PENTBLS$

PROJECT REFERENCE NO.	SHEET NO.
17BP.14.R.39	UO-5

UTILITIES BY OTHERS

CH ENGINEERING
3220 GLEN ROYAL RD. RALEIGH, NC 27617
TELE 919.788.0224 FAX 919.788.0232
NC LICENSE #P-0189

NOTE:
ALL PROPOSED UTILITY WORK SHOWN ON THIS SHEET WILL BE DONE BY OTHERS

CONTACT INFORMATION FOR UTILITIES

POWER: HAYWOOD EMC; WAYNE NICHOLS 828-506-0170 WAYNE.NICHOLS@HAYWOODEMC.COM
PHONE: AT&T; SCOTT ADDINGTON 1-828-258-7138 JA2089@ATT.COM
CABLE: CAROLINA MOUNTAIN CABLEVISION; TERRY SERSLAND 1-828-507-6472 TERRY@CBVNOL.COM
WATER: MAGGIE VALLEY SANITARY DISTRICT; NEIL CARPENTER 828-926-0145 NEILC@MVSDH20.COM

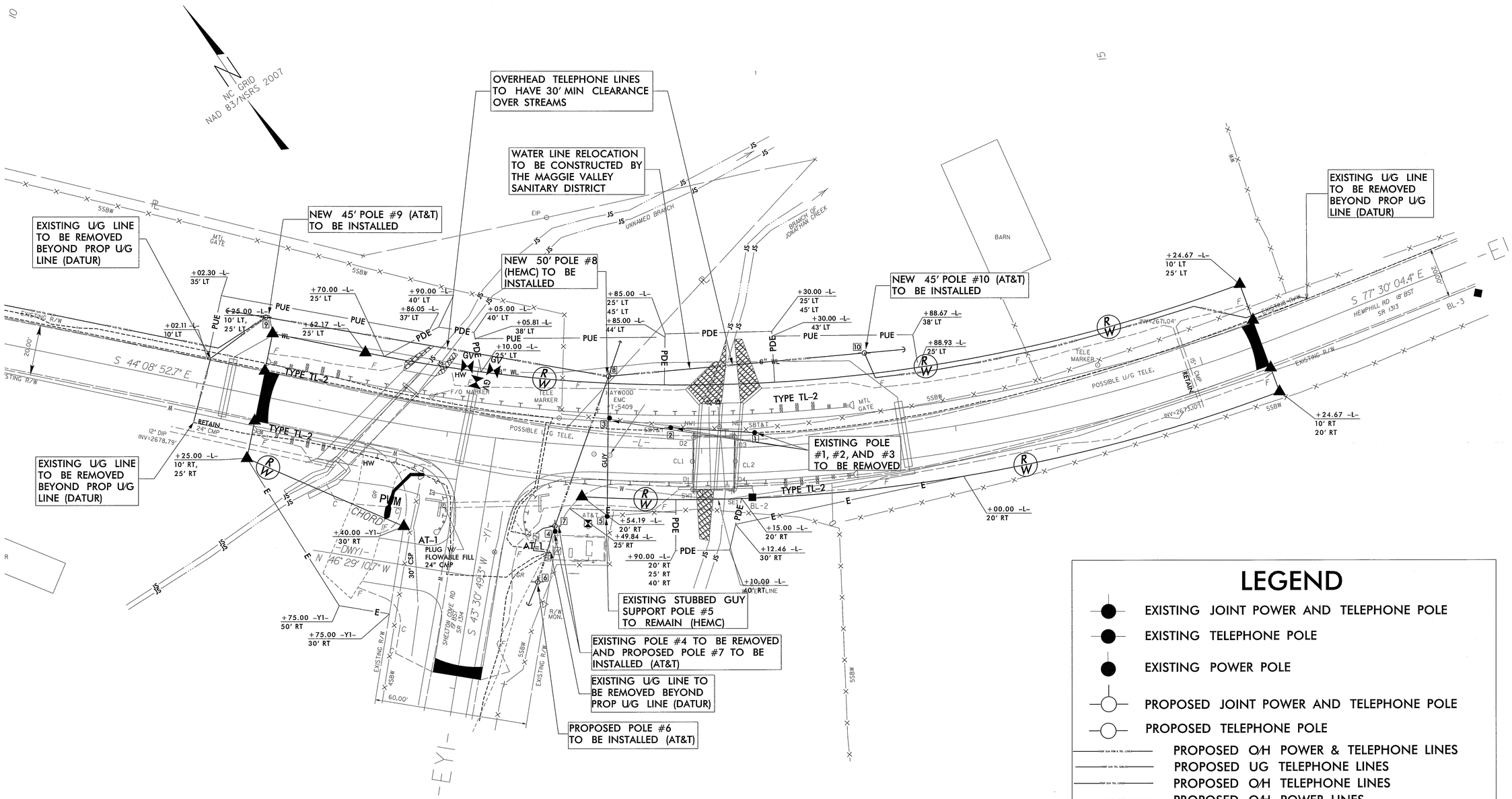

REVISION 1. 10/3/12 CHANGED O/H POWER AND TELEPHONE TO O/H TELEPHONE BETWEEN POLES 9 AND 10

5/14/99

5/29/2013
FTWEED 430162_UBO.dgn

THE LOUIS BERGER GROUP, Inc.
1001 Wade Avenue, Suite 400
Raleigh, NC 27605-3322

UBO PLANS

17BP.14.R.39
CROSS SECTIONS

INDEX OF SHEETS

TITLE	STATION	SHEET NO.
CROSS-SECTION INDEX		X-1
CROSS-SECTION SUMMARY		X-1A
-L- CROSS-SECTIONS	11+30 - 15+20	X-2 THROUGH X-9
-Y1- CROSS-SECTIONS	10+10 - 10+90	X-10 THROUGH X-11

NOTE: Approximate quantities only. Unclassified Excavation, Fine Grading, and Clearing and Grubbing will be paid for at the contract lump sum price for "Grading".

8/23/99

2/18/2013
11:16:25 AM
G:\OR Projects\OR1100 - NCDOT Group W\430162\Roadway\XSC\430162_RDY_XPL_001.dgn

PROJ. REFERENCE NO.	SHEET NO.
17BP.14.R.39	X-1A

STATE OF NORTH CAROLINA
DIVISION OF HIGHWAYS

NOTE: EMBANKMENT COLUMN DOES NOT INCLUDE BACKFILL FOR UNDERCUT

CROSS-SECTION SUMMARY

Station L	Uncl. Exc. (cu. yd.)	Embt (cu. yd.)
11+30.00	0	0
11+40.00	1	2
11+50.00	1	2
11+60.00	1	3
11+70.00	1	4
11+80.00	1	4
11+90.00	1	9
12+00.00	1	8
12+10.00	1	3
12+20.00	0	3
12+30.00	0	5
12+40.00	0	11
12+50.00	0	18
12+60.00	0	21
12+70.00	0	25
12+80.00	0	28
12+90.00	0	31
13+00.00	0	17
13+10.00	0	1
13+20.00	0	14
13+30.00	0	25
13+40.00	0	24
13+50.00	0	22
13+60.00	0	21
13+70.00	0	16
13+80.00	0	12
13+90.00	0	11
14+00.00	0	9
14+10.00	0	8
14+20.00	0	7
14+30.00	0	6
14+40.00	0	6
14+50.00	0	6
14+60.00	0	6
14+70.00	0	5
14+80.00	0	4
14+90.00	0	4
15+00.00	0	4
15+10.00	0	3
15+20.00	0	2

Station Y1	Uncl. Exc. (cu. yd.)	Embt (cu. yd.)
10+10.00	0	0
10+20.00	2	9
10+30.00	3	11
10+40.00	3	7
10+50.00	4	4
10+60.00	5	2
10+70.00	6	2
10+80.00	7	1
10+90.00	7	1

0 2.5 5	PROJ. REFERENCE NO.	SHEET NO.
	17BP.14.R.39	X-2

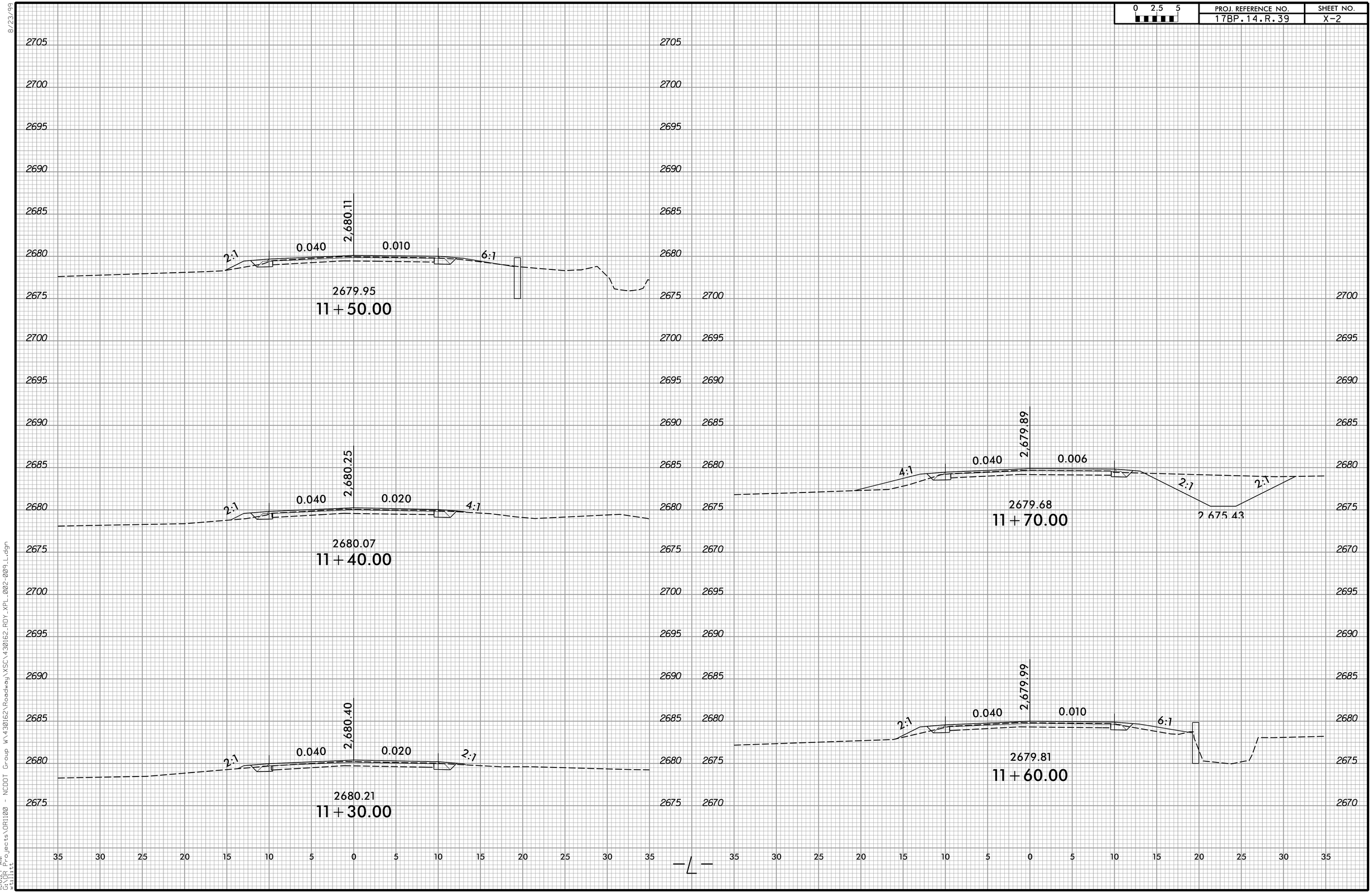

8/23/99

1:46:27 AM
GICHR Projects\DR1100 - NCDOT Group W\430162\Roadway\XSC\430162_RDY_XPL_002-009_L.dgn
xsplitt

0 2.5 5	PROJ. REFERENCE NO.	SHEET NO.
	17BP.14.R.39	X-3

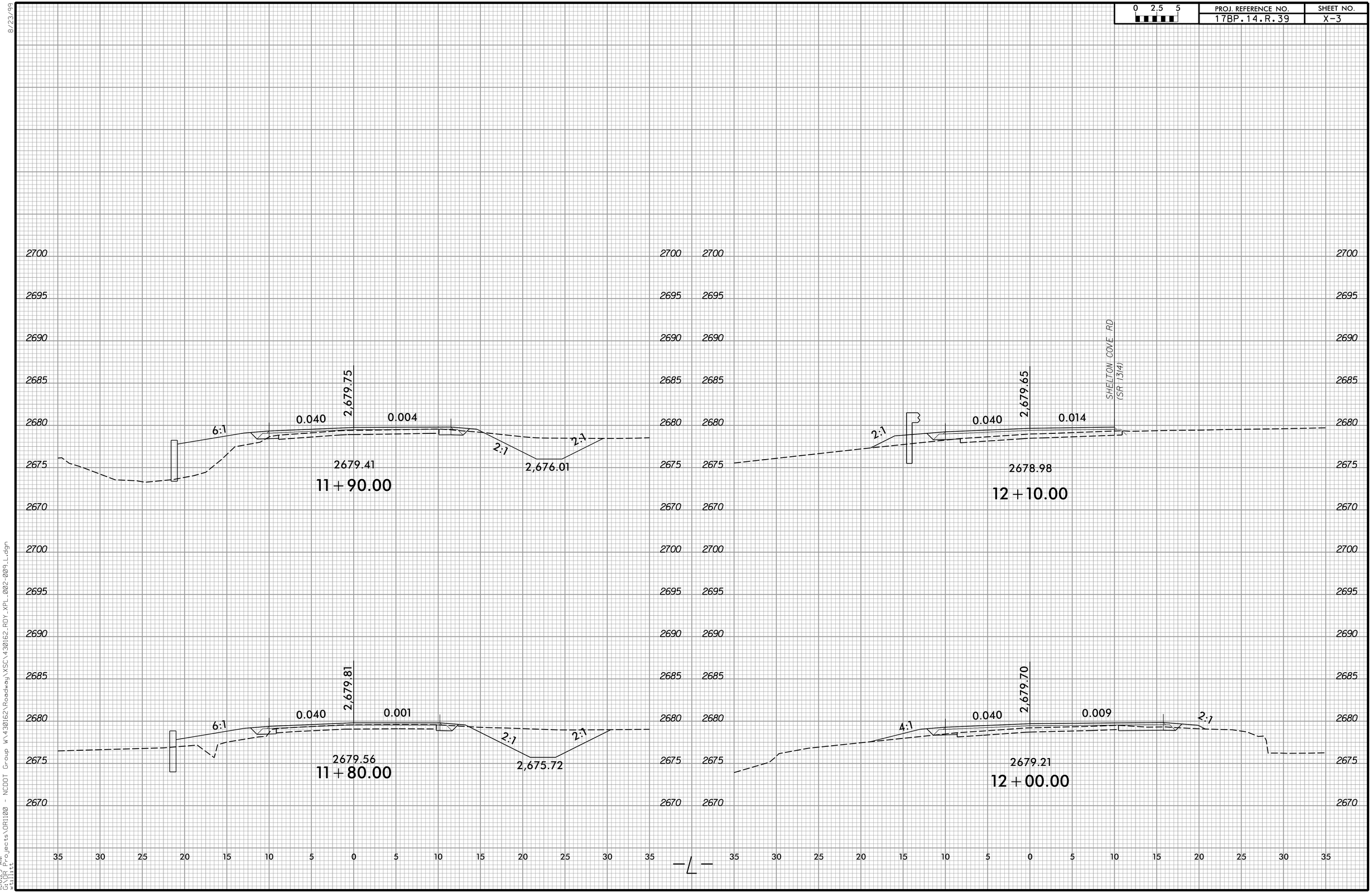

8/23/99

11:16:29 AM
G:\DOT Projects\OR1100 - NCDOT Group W\430162\Roadway\XSC\430162_RDY_XPL_002-009-1.dgn
wtillett

0 2.5 5	PROJ. REFERENCE NO.	SHEET NO.
	17BP.14.R.39	X-4

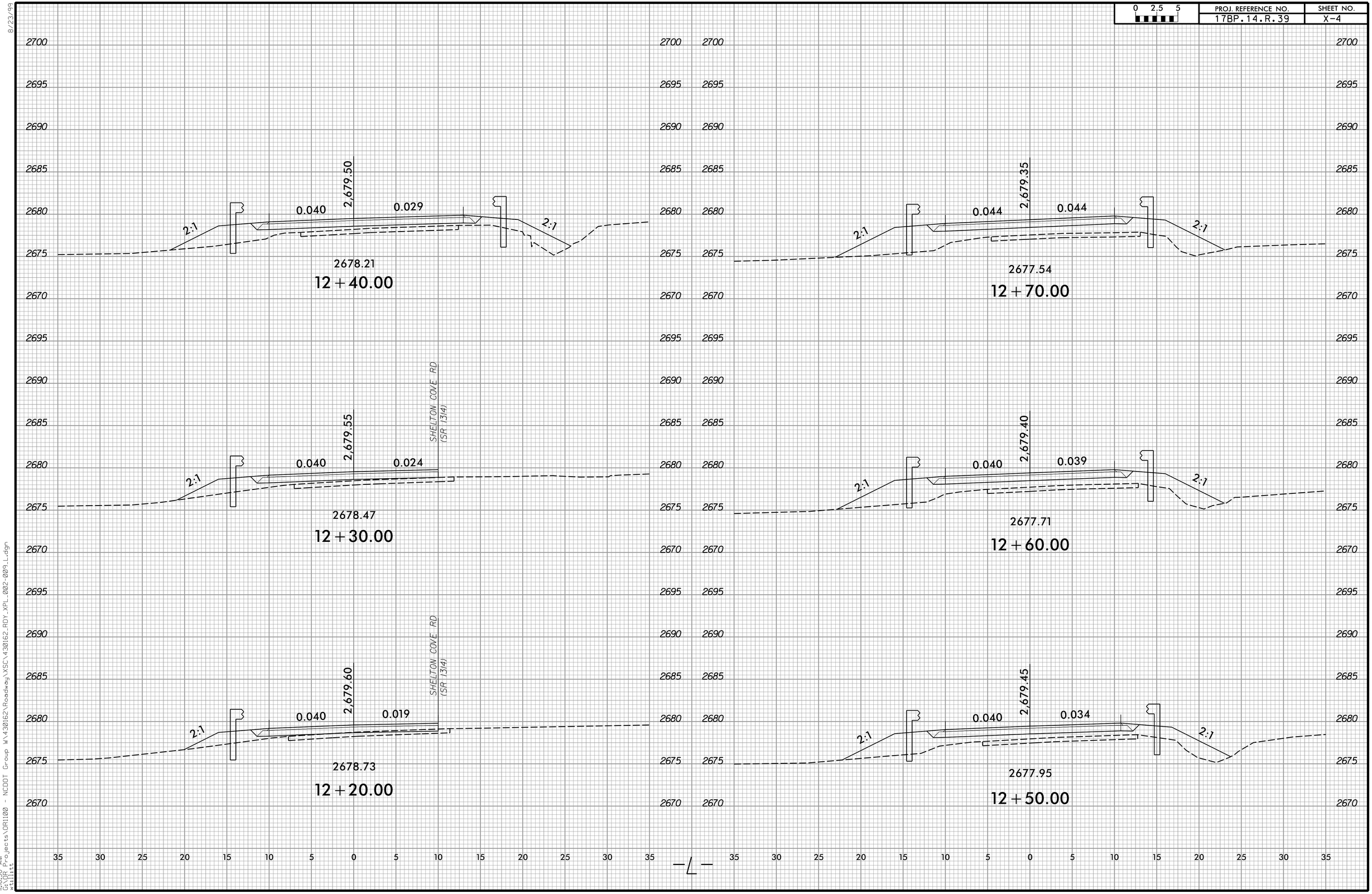

8/23/99

W:\6:30 AM
G:\DR Projects\DR1100 - NCDOT Group W\430162\Roadway\XSC\430162_RDY_XPL_002-009_L.dgn
xtillitt

0 2.5 5	PROJ. REFERENCE NO.	SHEET NO.
	17BP.14.R.39	X-5

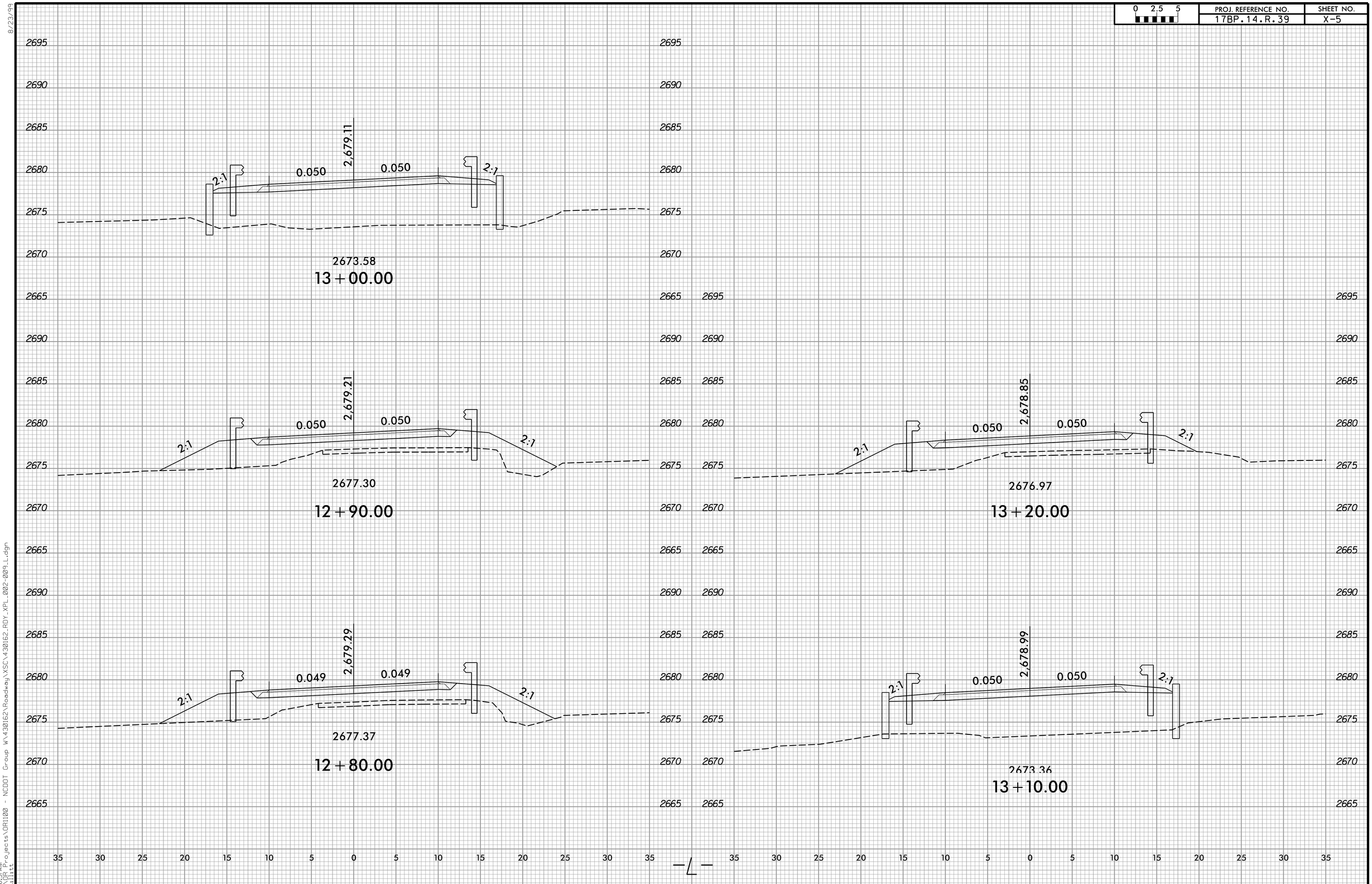

8/23/99

14:16:31 AM
GRAP
utilitt

W:\430162\Roadway\XSC\430162_RDY_XPL_002-009_L.dgn
NCDOT Group
Projects\OR1100 -

0 2.5 5	PROJ. REFERENCE NO.	SHEET NO.
	17BP.14.R.39	X-6

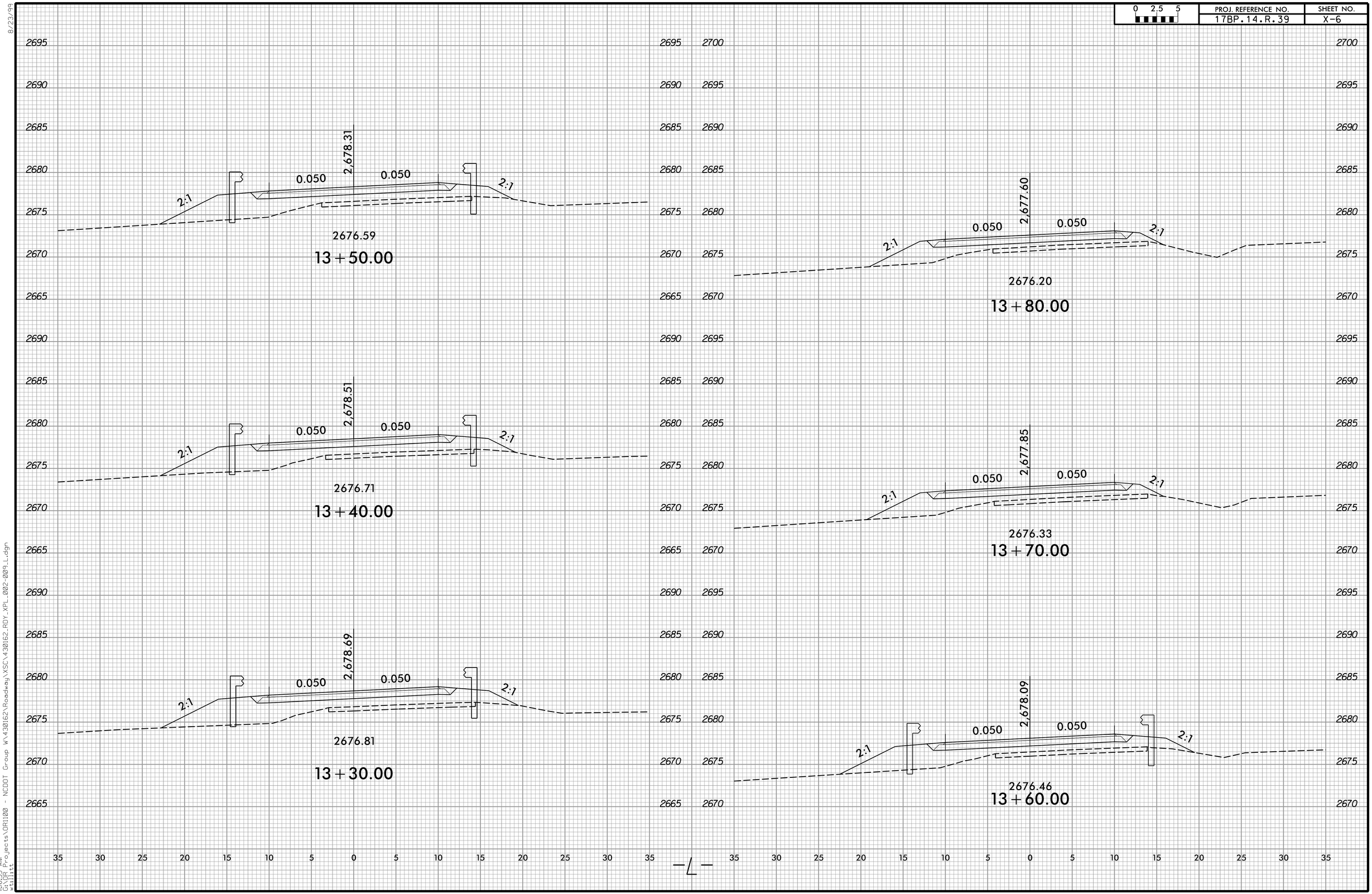

8/23/99

1:46:33 AM
C:\SIR Projects\DR1100 - NCDOT Group W\430162\Roadway\XSC\430162_RDY_XPL_002-009_L.dgn
wallitt

0 2.5 5	PROJ. REFERENCE NO.	SHEET NO.
	17BP.14.R.39	X-7

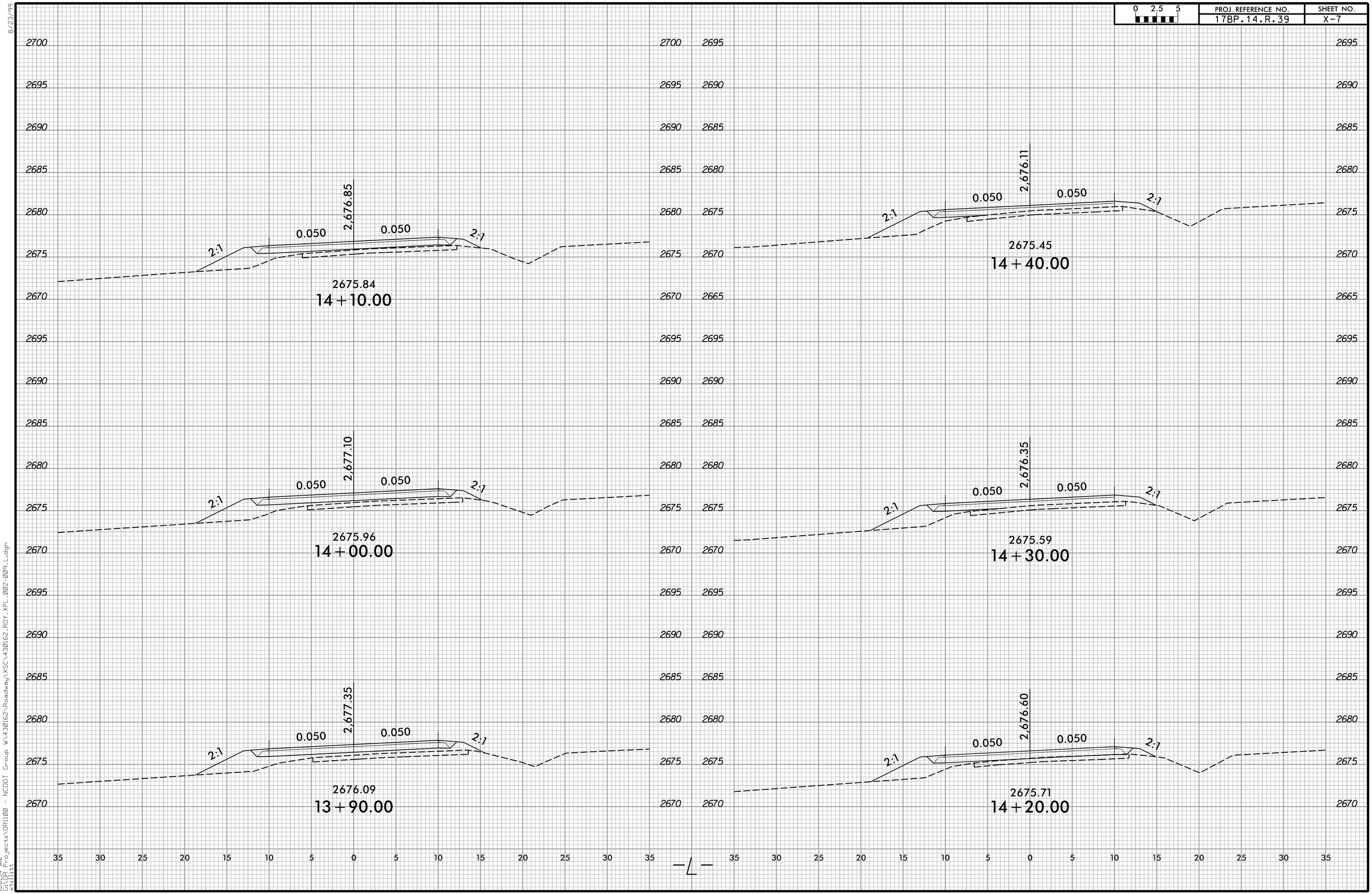

8/23/99

11:6:34 AM
C:\SIR Projects\DR1100 - NCDOT Group W\430162\Roadway\XSC\430162_RDY_XPL_002-009_L.dgn
wallitt

0 2.5 5	PROJ. REFERENCE NO.	SHEET NO.
	17BP.14.R.39	X-8

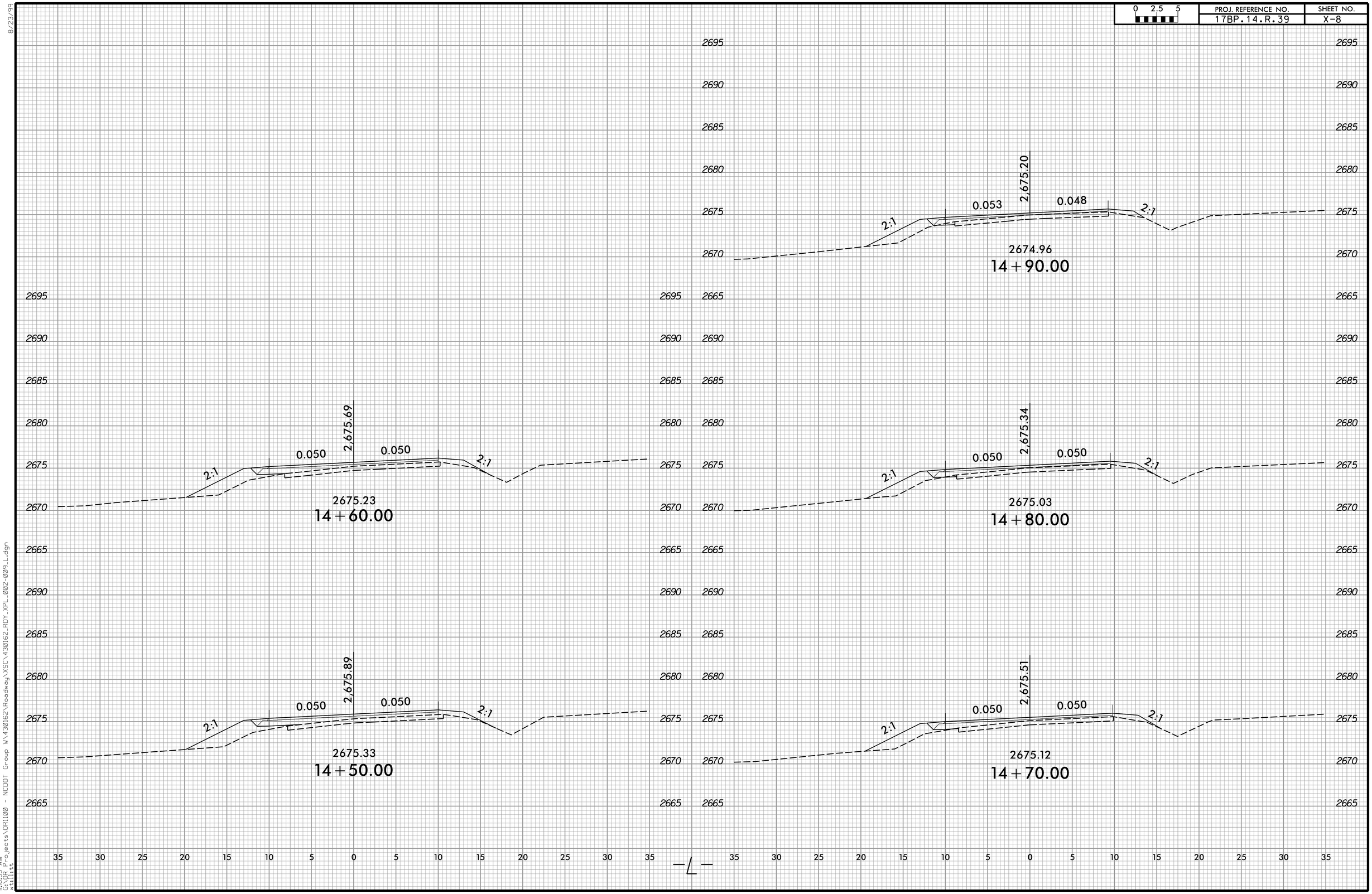

8/23/99

11:16:35 AM
C:\SIR Projects\DR1100 - NCDOT Group W\430162\Roadway\XSC\430162_RDY_XPL_002-009_L.dgn
wallitt

0 2.5 5	PROJ. REFERENCE NO.	SHEET NO.
	17BP.14.R.39	X-9

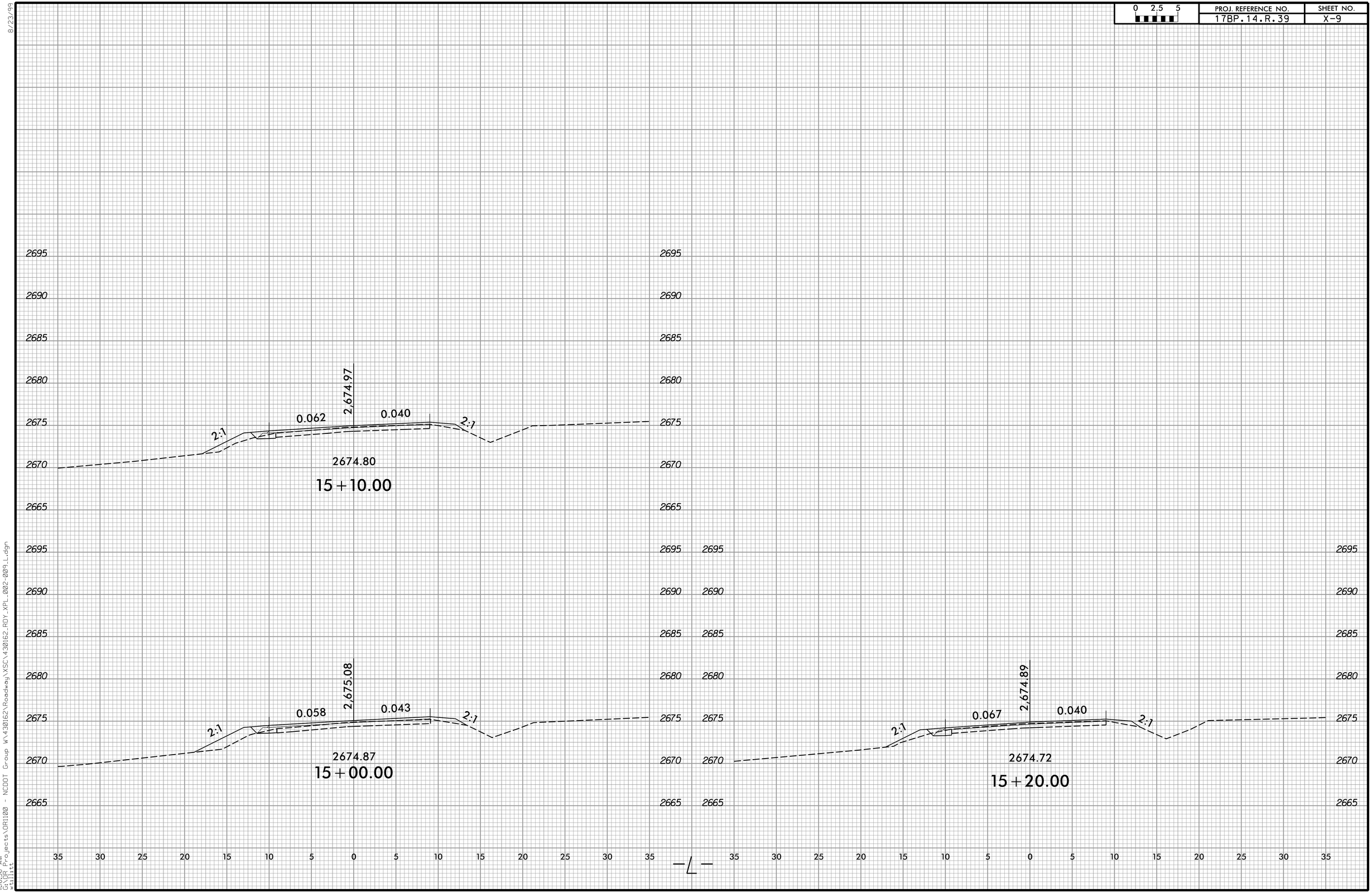

8/23/99

11:16:36 AM
GXPR Projects\OR1100 - NCDOT Group W\430162\Roadway\XSC\430162_RDY_XPL_002-009-L.dgn
wtillett

0 2.5 5	PROJ. REFERENCE NO.	SHEET NO.
	17BP.14.R.39	X-10

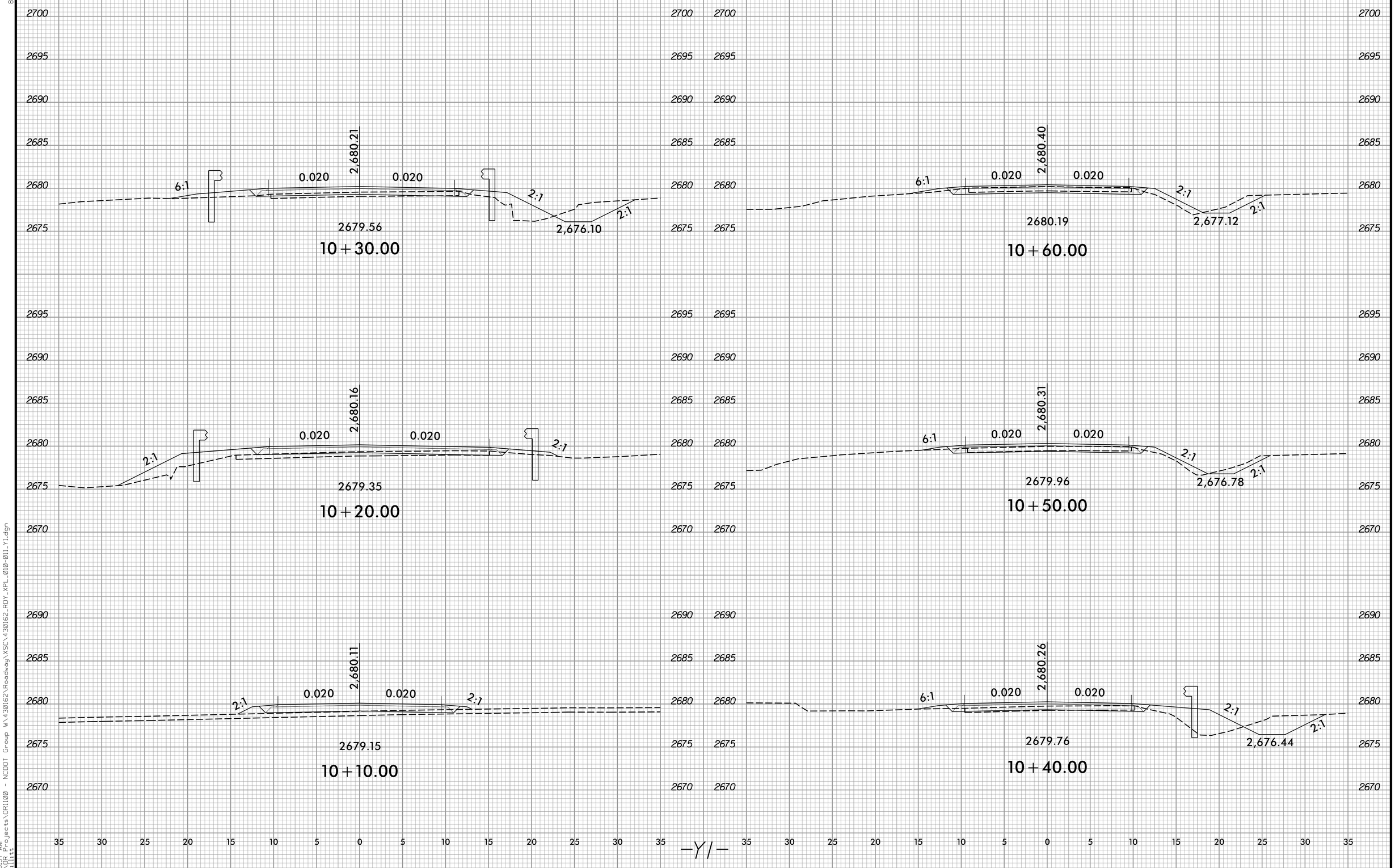

8/23/99

1:46:37 AM
C:\PW_Projects\DR1100 - NCDOT Group W\430162\Roadway\XSC\430162_RDY_XPL_010-011_Y1.dgn
wsilliit

0 2.5 5	PROJ. REFERENCE NO.	SHEET NO.
	17BP.14.R.39	X-11

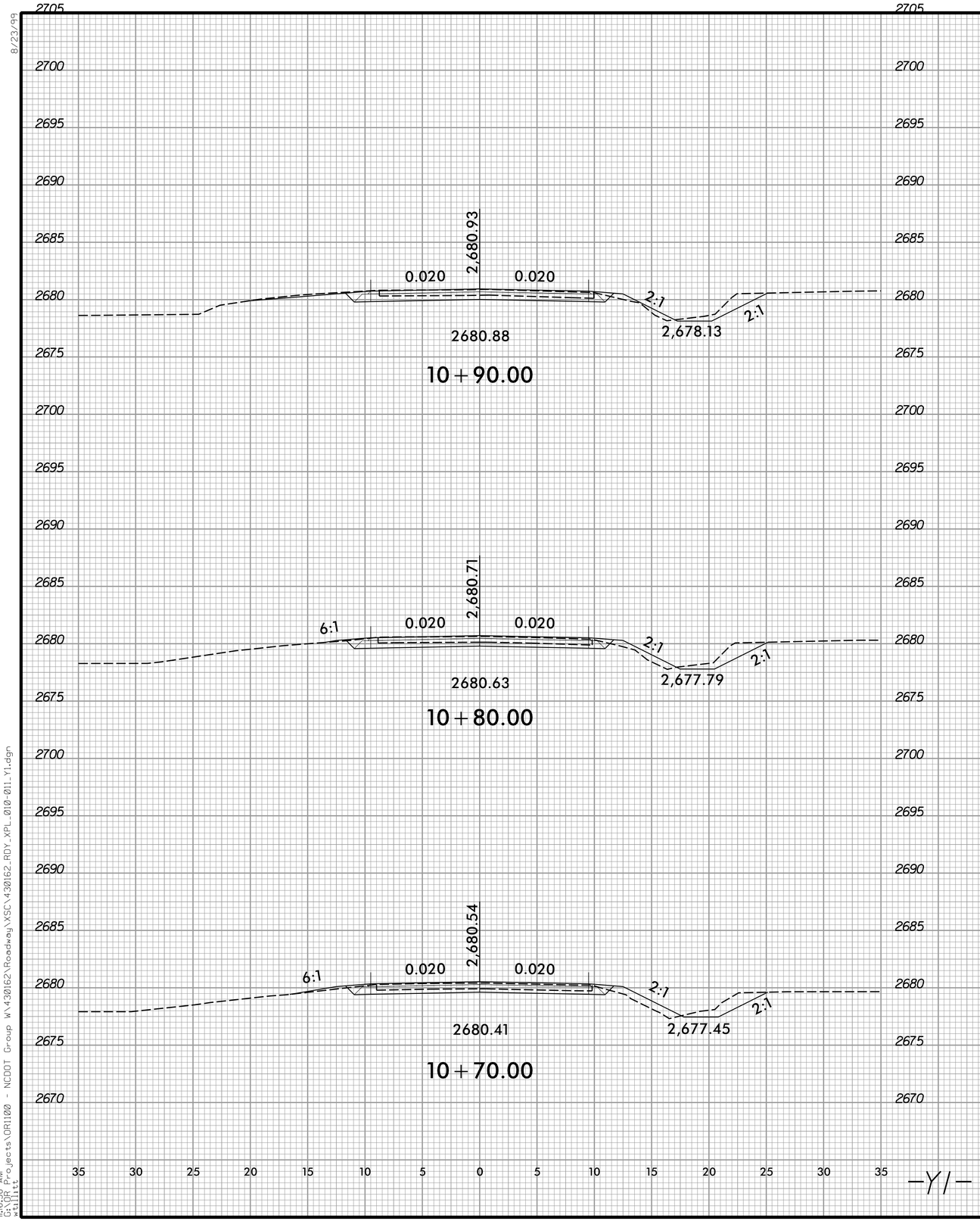

8/23/99

11:16:38 AM
C:\OR Projects\OR1100 - NCDOT Group W\430162\Roadway\XSC\430162_RDY_XPL_010-011_Y1.dgn

BM#1 : RR SPIKE SET IN 20" DBL. MAPLE TREE, -L- STA. 7+51.97, 25.43' RT., EL. 2678.77'

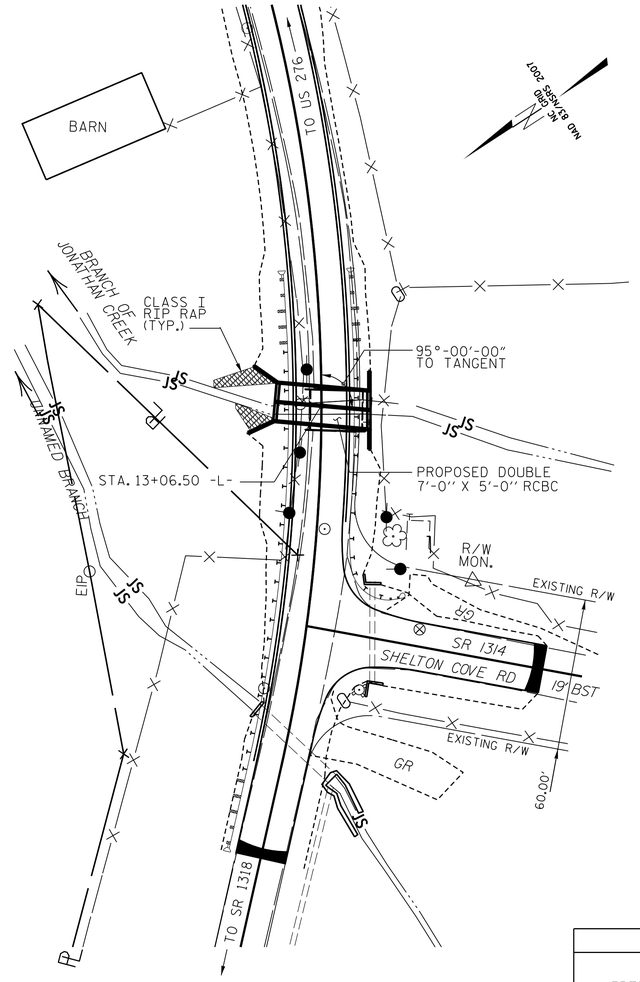

LOCATION SKETCH

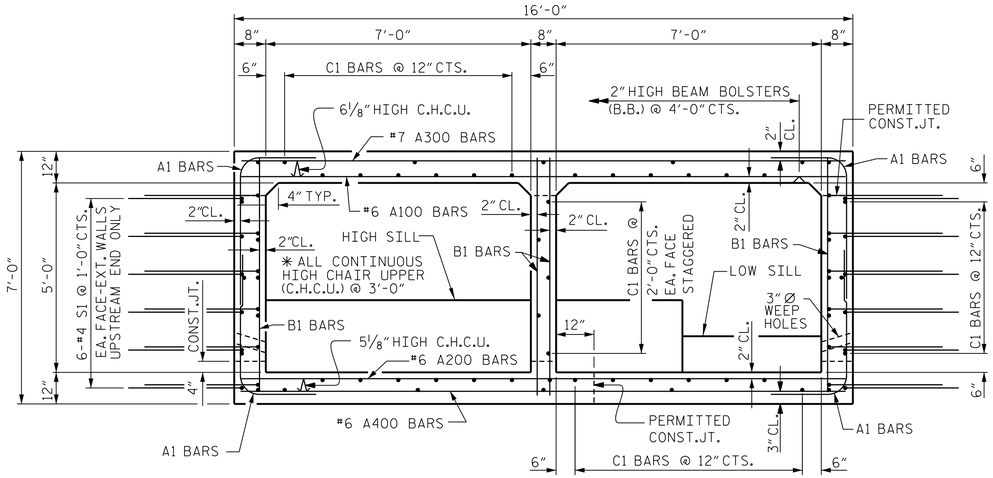

RIGHT ANGLE SECTION OF BARREL

THERE ARE 55 "C" BARS IN SECTION OF BARREL.
(LOOKING DOWN STREAM)

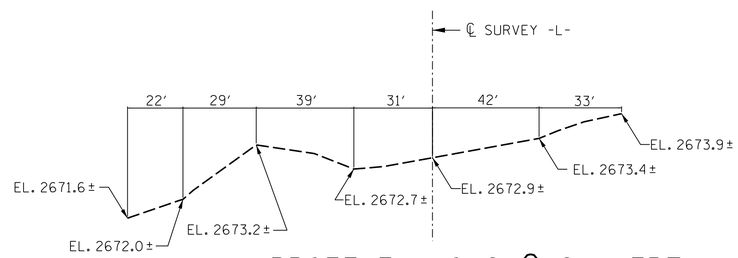

PROFILE ALONG ℄ CULVERT

HYDRAULIC DATA

DESIGN DISCHARGE	= 220 C.F.S.
FREQUENCY OF DESIGN FLOOD	= 10 YEARS
DESIGN HIGH WATER ELEVATION	= 2677.3'
DRAINAGE AREA	= 0.68 SQ. MI.
BASIC DISCHARGE (Q100)	= 440 C.F.S.
BASIC HIGH WATER ELEVATION	= 2678.5'

OVERTOPPING FLOOD DATA

OVERTOPPING DISCHARGE	= 230 C.F.S.
FREQUENCY OF OVERTOPPING FLOOD	= 10 + YEARS
OVERTOPPING FLOOD ELEVATION	= 2677.4'

BAR TYPES

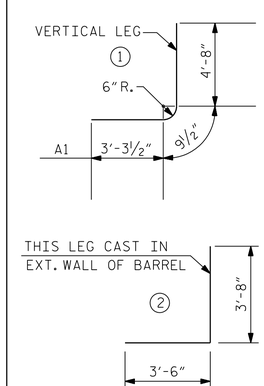

BILL OF MATERIAL

BAR	NO.	SIZE	TYPE	LENGTH	WEIGHT
A1	308	7	1	8'-9"	5509
A100	80	6	STR.	15'-6"	1862
A200	80	6	STR.	15'-6"	1862
A300	80	7	STR.	15'-6"	2535
A400	80	6	STR.	15'-6"	1862
B1	308	5	STR.	6'-7"	2115
C1	110	4	STR.	19'-9"	1451
G1	8	5	STR.	15'-8"	131
S1	24	4	2	7'-2"	115

SPLICE CHART	
#4C1	1'-11"
#5B1	1'-9"

FOUNDATION NOTES

SEE SECTION 414 OF THE STANDARD SPECIFICATIONS FOR CULVERT EXCAVATION AND BACKFILLING.

EXCAVATE 1 FOOT BELOW CULVERT AND FOOTINGS AND REPLACE THE EXCAVATED MATERIAL WITH FOUNDATION CONDITIONING MATERIAL.

FOUNDATION CONDITIONING MATERIAL SHALL BE CLASS VI SELECT MATERIAL MEETING THE REQUIREMENTS OF SECTION 1016 OF THE STANDARD SPECIFICATIONS.

BACKFILL WITH SELECT MATERIAL, CLASS III MEETING THE REQUIREMENTS OF SECTION 1016 OF THE STANDARD SPECIFICATIONS.

NOTES

ASSUMED LIVE LOAD ---------- HL-93 OR ALTERNATE LOADING.

DESIGN FILL ---------- 2.2'.

FOR OTHER DESIGN DATA AND NOTES SEE STANDARD NOTE SHEET.

3" Ø WEEP HOLES INDICATED TO BE IN ACCORDANCE WITH THE SPECIFICATIONS.

CONCRETE IN CULVERTS TO BE POURED IN THE FOLLOWING ORDER:

1. WING FOOTINGS AND FLOOR SLAB INCLUDING 4" OF ALL VERTICAL WALLS.
2. THE REMAINING PORTIONS OF THE WALLS AND WINGS FULL HEIGHT FOLLOWED BY ROOF SLAB AND HEADWALLS.

THE RESIDENT ENGINEER SHALL CHECK THE LENGTH OF CULVERT BEFORE STAKING IT OUT TO MAKE CERTAIN THAT IT WILL PROPERLY TAKE CARE OF THE FILL.

DIMENSIONS FOR WING LAYOUT AS WELL AS ADDITIONAL REINFORCING STEEL EMBEDDED IN BARREL ARE SHOWN ON WING SHEET.

STEEL IN THE BOTTOM SLAB MAY BE SPLICED AT THE PERMITTED CONSTRUCTION JOINT AT THE CONTRACTOR'S OPTION. EXTRA WEIGHT OF STEEL DUE TO THE SPLICES SHALL BE PAID FOR BY THE CONTRACTOR.

AT THE CONTRACTOR'S OPTION, HE MAY SPLICE THE VERTICAL REINFORCING STEEL IN THE INTERIOR FACE OF EXTERIOR WALL AND BOTH FACES OF INTERIOR WALLS ABOVE LOWER WALL CONSTRUCTION JOINT. THE SPLICE LENGTH SHALL BE AS PROVIDED IN THE SPLICE LENGTH CHART SHOWN ON THE PLANS. EXTRA WEIGHT OF STEEL DUE TO THE SPLICES SHALL BE PAID FOR BY THE CONTRACTOR.

AT THE CONTRACTOR'S OPTION HE MAY SUBMIT, TO THE ENGINEER FOR APPROVAL, DESIGN AND DETAIL DRAWINGS FOR A PRECAST REINFORCED CONCRETE BOX CULVERT IN LIEU OF THE CAST-IN-PLACE CULVERT SHOWN ON THE PLANS. THE DESIGN SHALL PROVIDE THE SAME SIZE AND NUMBER OF BARRELS AS USED ON THE CAST-IN-PLACE DESIGN. FOR OPTIONAL PRECAST REINFORCED CONCRETE BOX CULVERT, SEE SPECIAL PROVISIONS.

A 3 FOOT STRIP OF FILTER FABRIC SHALL BE ATTACHED TO THE FILL FACE OF THE WING COVERING THE ENTIRE LENGTH OF THE EXPANSION JOINT.

FOR CULVERT DIVERSION DETAILS AND PAY ITEM, SEE EROSION CONTROL PLANS.

THE EXISTING STRUCTURE CONSISTING OF ONE 16'-6" SPAN CONSISTING OF TIMBER FLOOR ON TIMBER JOISTS ON TIMBER ABUTMENTS SHALL BE REMOVED. THE EXISTING BRIDGE IS PRESENTLY NOT POSTED FOR LOAD LIMIT. SHOULD THE STRUCTURAL INTEGRITY OF THE BRIDGE DETERIORATE A LOAD LIMIT MAY BE POSTED AND MAY BE REDUCED AS FOUND NECESSARY DURING THE LIFE OF THE PROJECT.

REMOVAL OF THE EXISTING BRIDGE SHALL BE PERFORMED SO AS NOT TO ALLOW DEBRIS TO FALL INTO THE WATER. THE CONTRACTOR SHALL REMOVE THE BRIDGE AND SUBMIT PLANS FOR DEMOLITION IN ACCORDANCE WITH ARTICLE 402-2 OF THE STANDARD SPECIFICATIONS.

ADDITIONAL A100, A200, A300 AND A400 BARS (INCLUDED IN BILL OF MATERIAL) TO BE SPLAYED AT INLET END TO ACCOUNT FOR 95° SKEW IN ROOF AND FLOOR SLABS.

FOR UTILITY INFORMATION, SEE UTILITY PLANS AND SPECIAL PROVISIONS.

FOR SUBMITTAL OF WORKING DRAWINGS, SEE SPECIAL PROVISIONS.

FOR FALSEWORK AND FORMWORK, SEE SPECIAL PROVISIONS.

FOR CRANE SAFETY, SEE SPECIAL PROVISIONS.

FOR GROUT FOR STRUCTURES, SEE SPECIAL PROVISIONS.

NORTH CAROLINA PROFESSIONAL SEAL 14047 ENGINEER STEPHEN D. COOK

REGISTERED ENGINEER
6/5/2013

TOTAL STRUCTURE QUANTITIES

CLASS A CONCRETE			
BARREL @ 1.6 CY/FT	56.8	C.Y.	
WING ETC.	13.9	C.Y.	
SILLS & BAFFLES	2.3	C.Y.	
TOTAL	73.0	C.Y.	
REINFORCING STEEL			
BARREL	17442	LBS.	
WINGS ETC.	722	LBS.	
SILLS & BAFFLES	106	LBS.	
TOTAL	18270	LBS.	
FOUNDATION COND. MAT'L.	50	TONS	
CULVERT EXCAVATION	LUMP SUM		
REMOVAL OF EXISTING STRUCTURE	LUMP SUM		
RIP-RAP, CLASS B	12.0	TONS	

PROJECT NO. 17BP.14.R.39
HAYWOOD COUNTY
STATION: 13+06.50 -L-

SHEET 1 OF 7 REPLACES BRIDGE #430162

STATE OF NORTH CAROLINA
DEPARTMENT OF TRANSPORTATION
RALEIGH

BARREL STANDARD DOUBLE 7 FT. x 5 FT. CONCRETE BOX CULVERT 95° SKEW

NOVEMBER 1990

THE LOUIS BERGER GROUP, Inc.
1001 Wade Avenue, Suite 400
Raleigh, NC 27605-3322

REVISIONS								SHEET NO.
NO.	BY:	DATE:	NO.	BY:	DATE:			C-1
1			3					TOTAL SHEETS
2			4					7

ASSEMBLED BY : R. KNIGHT	DATE : MAR 2012	SPECIAL	
CHECKED BY : S. COOK	DATE : JUNE 2012		
DRAWN BY : R.W. WRIGHT	DATE : JULY, 1990	STANDARD	
CHECKED BY : D.A. GLADDEN	DATE : JULY, 1990		

STD. NO. CB12A

G:\OR Projects\OR1100 - NCDOT Group W\430162\Structures\430162_STR_RCBC01.dgn
6/5/2013 1100_PDF_full.pltcfg 1100_str.tbl

ADDED NOV. 1, 1990

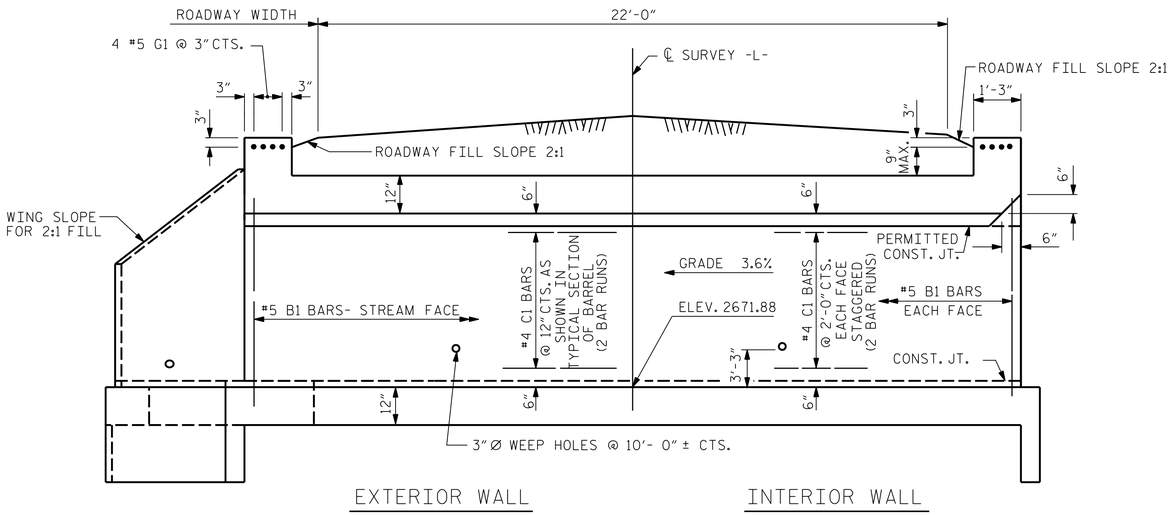

CULVERT SECTION NORMAL TO ROADWAY

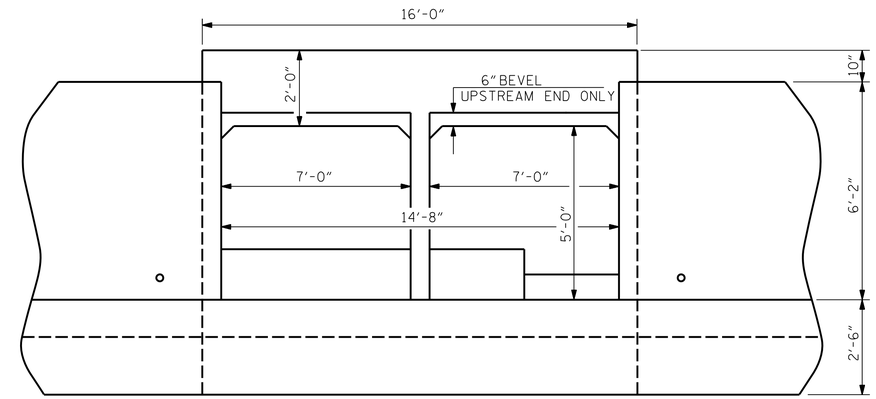

INLET END ELEVATION

FOR CULVERT SILL DETAILS, SEE SHEET 3 OF 7.

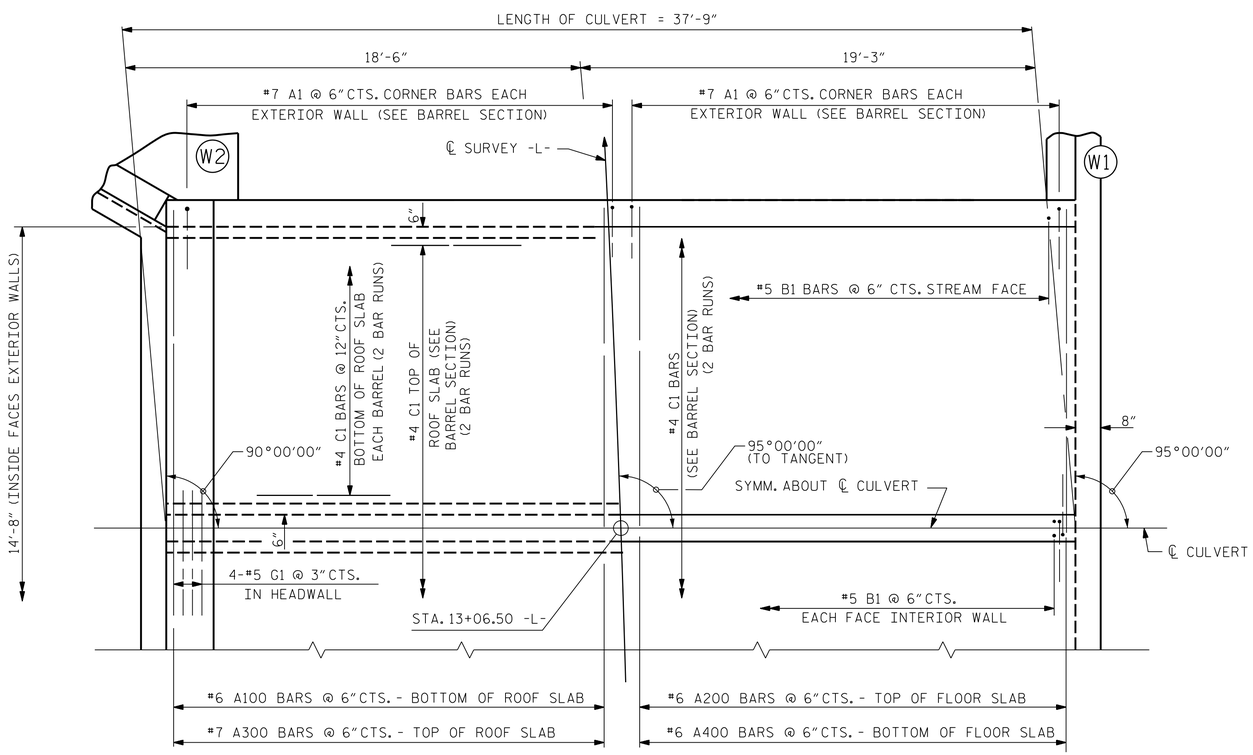

PART PLAN-ROOF SLAB

PART PLAN-FLOOR SLAB

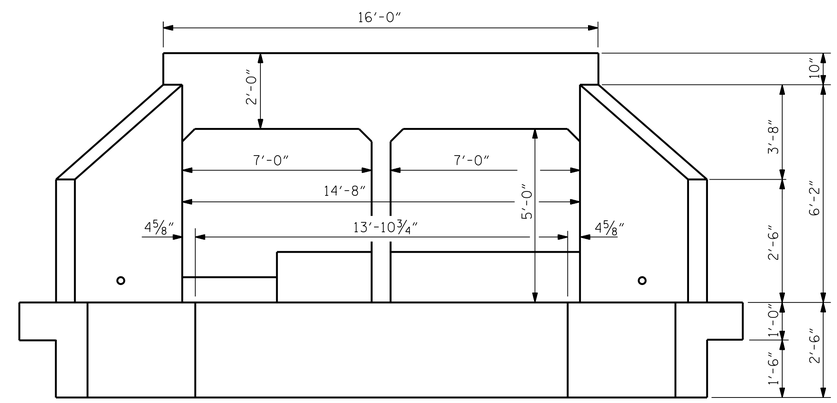

OUTLET END ELEVATION

FOR CULVERT SILL DETAILS, SEE SHEET 3 OF 7.

PROJECT NO. 17BP.14.R.39

HAYWOOD COUNTY

STATION: 13+06.50 -L-

SHEET 2 OF 7

STATE OF NORTH CAROLINA
DEPARTMENT OF TRANSPORTATION
RALEIGH

BARREL STANDARD DOUBLE 7 FT. x 5 FT. CONCRETE BOX CULVERT 95° SKEW

1971

NORTH CAROLINA PROFESSIONAL SEAL 14047 ENGINEER STEPHEN D. COOK

REGISTERED ENGINEER
6/5/2013

THE LOUIS BERGER GROUP, Inc.
1001 Wade Avenue, Suite 400
Raleigh, NC 27605-3322

REVISIONS								SHEET NO.
NO.	BY:	DATE:	NO.	BY:	DATE:			C-2
1			3					TOTAL SHEETS
2			4					7

ASSEMBLED BY : R. KNIGHT	DATE : MAR 2012	SPECIAL	
CHECKED BY : S. COOK	DATE : JUNE 2012		
DRAWN BY : RALPH D. UNDERWOOD	DATE : MAY 1971	STANDARD	
CHECKED BY : JOEL A. JOHNSON	DATE : JULY 1971		

STD. NO. CB12

REVISED 11-19-99 BY M.M. CHECKED BY R.W.W.
REDRAWN NOV. 1990 BY TSS CHECKED BY ARB

G:\OR Projects\OR1100 - NCDOT Group W\430162\Structures\430162_STR_RCBC02.dgn
6/5/2013 1100_PDF_full.pltcfg 1100_str.tbl

NOTES:

BED MATERIAL BETWEEN SILLS/BAFFLES IN THE CULVERT SHALL PROVIDE A CONTINUOUS LOW FLOW CHANNEL. THE MATERIAL SHALL BE NATURAL STONE WITH A GRADATION SIZE SIMILAR TO THAT OF CLASS B RIP RAP. STONES LARGER THAT 6" SHALL NOT BE PLACED WITHIN THE LOW FLOW CHANNEL. BED MATERIALS SUBJECT TO APPROVAL BY THE ENGINEER

SILLS/BAFFLES ARE TO BE 1'-0" WIDE, CAST SEPARATELY AND ATTACHED BY DOWELS.

TOP OF LOW SILLS/BAFFLES SHOULD MATCH STREAM BED ELEVATION IN LOW FLOW CHANNEL OF STREAM.

CLASS B RIP RAP MAY BE USED TO SUPLEMENT NATURAL BED MATERIAL.

DO NOT SET ELEVATION OF HIGH SILLS/BAFFLES ABOVE BANK FULL.

⚠ SET ASIDE EXCAVATED NATURAL BED MATERIAL AND USE IT TO BACKFILL INSIDE BOTTOM OF RCBC CELLS.

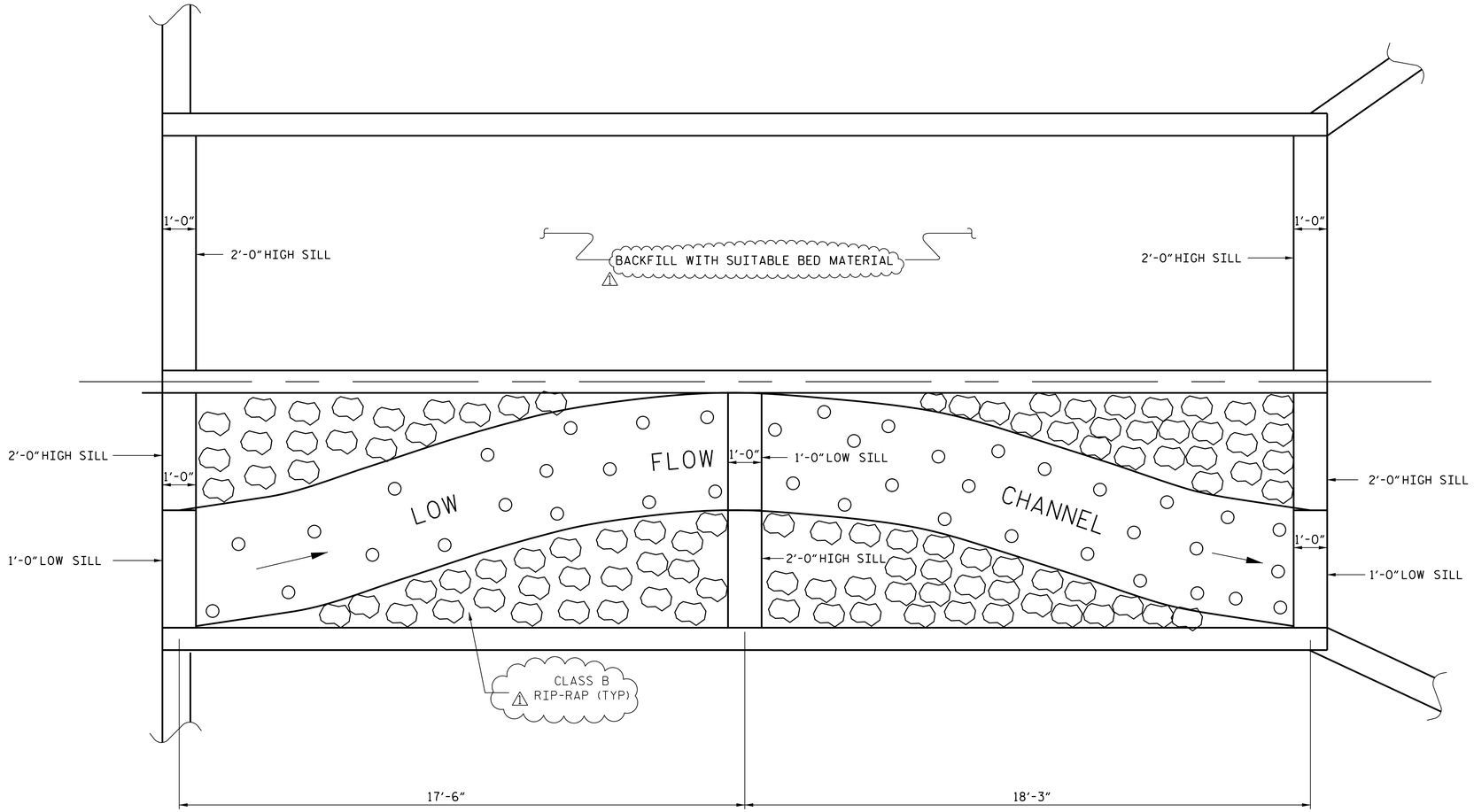

PLAN

SILL QUANTITIES (INCLUDED IN TOTAL FOR STRUCTURE)					
BAR	NO.	SIZE	TYPE	LENGTH	WEIGHT
D1	23	#6	STR	2'-6"	86
D2	9	#6	STR	1'-6"	20
REINFORCING STEEL TOTAL					106 LBS
CLASS A CONCRETE TOTAL					2.3 CY
RIP-RAP, CLASS B					12.0 TONS

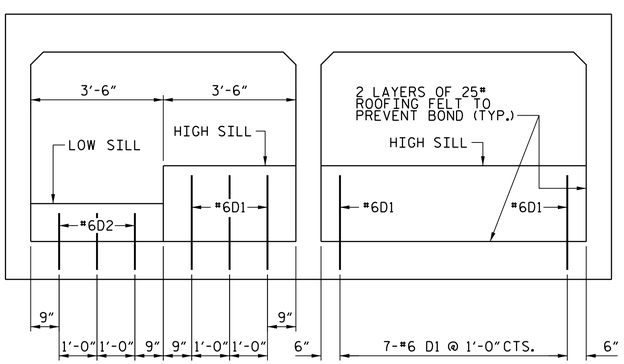

ELEVATION VIEW - OUTLET

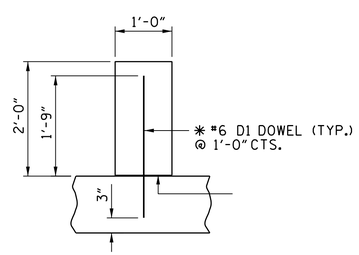

* DOWELS MAY BE PUSHED INTO GREEN CONCRETE AFTER SLAB HAS BEEN FLOAT FINISHED

SECTION THRU 2'-0" SILL

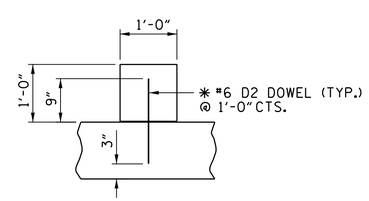

* DOWELS MAY BE PUSHED INTO GREEN CONCRETE AFTER SLAB HAS BEEN FLOAT FINISHED

SECTION THRU 1'-0" SILL

PROJECT NO. 17BP.14.R.39

HAYWOOD COUNTY

STATION: 13+06.50 -L-

SHEET 3 OF 7

STATE OF NORTH CAROLINA
DEPARTMENT OF TRANSPORTATION
RALEIGH

CONCRETE SILL DETAILS

NORTH CAROLINA PROFESSIONAL SEAL 14047 ENGINEER STEPHEN D. COOK

REGISTERED ENGINEER
6/5/2013

THE LOUIS BERGER GROUP, Inc.
1001 Wade Avenue, Suite 400
Raleigh, NC 27605-3322

REVISIONS						SHEET NO.
NO.	BY:	DATE:	NO.	BY:	DATE:	C-3
1	JAD	8/3/2012	3			TOTAL SHEETS
2			4			7

⚠ ADDED RIP-RAP AND BED MATERIAL NOTES.

DRAWN BY : R. KNIGHT DATE : JUNE 2012
CHECKED BY : S. COOK DATE : JUNE 2012

G:\OR Projects\OR1100 - NCDOT Group W\430162\Structures\430162_STR_RCBC03.dgn
6/5/2013 1100_PDF_full.pltcfg 1100_str.tbl

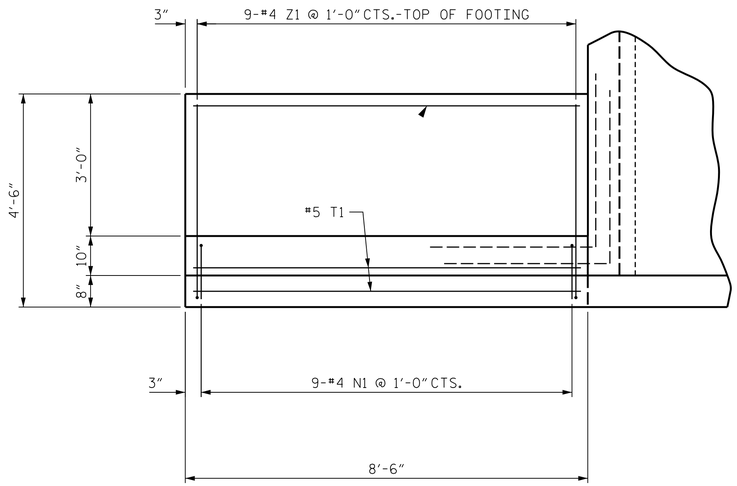

PLAN W1

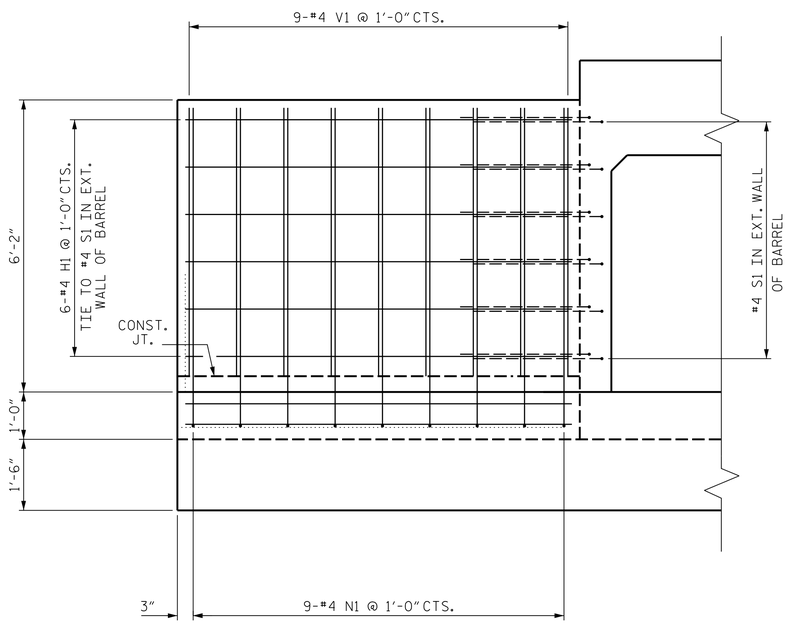

ELEVATION W1

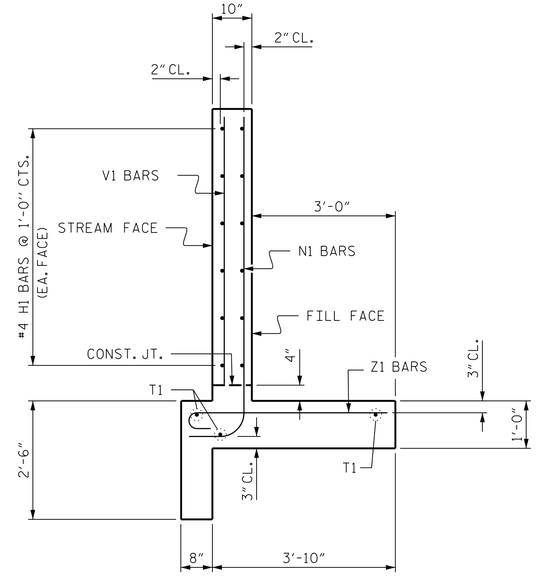

TYPICAL WING SECTION

BAR TYPES

ALL BAR DIMENSIONS ARE OUT TO OUT.

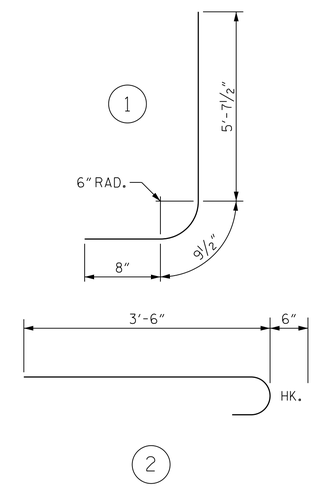

BILL OF MATERIAL

BAR	NO.	SIZE	TYPE	LENGTH	WEIGHT
H1	24	#4	STR	8'-2"	131
N1	18	#4	1	7'-2"	86
T1	6	#5	STR	8'-2"	51
V1	18	#4	STR	5'-6"	66
Z1	18	#4	2	4'-0"	48

REINFORCING STEEL
FOR 2 WINGS 382 LBS

CLASS A CONCRETE
2 WINGS 5.6 CY
1 HEADWALL 0.7 CY
1 END CURTAIN WALL 1.0 CY
TOTAL 7.3 CY

PROJECT NO. 17BP.14.R.39
HAYWOOD COUNTY
STATION: 13+06.50 -L-

SHEET 4 OF 7

STATE OF NORTH CAROLINA
DEPARTMENT OF TRANSPORTATION
RALEIGH

UPSTREAM WINGS FOR CONCRETE BOX CULVERT

H = 5'-0" SLOPE = 2:1
95° SKEW

NORTH CAROLINA PROFESSIONAL SEAL 14047 ENGINEER STEPHEN D. COOK
REGISTERED ENGINEER
6/5/2013

THE LOUIS BERGER GROUP, Inc.
1001 Wade Avenue, Suite 400
Raleigh, NC 27605-3322

REVISIONS						
NO.	BY:	DATE:	NO.	BY:	DATE:	
1			3			
2			4			

SHEET NO. C-4
TOTAL SHEETS 7

ASSEMBLED BY :	R. KNIGHT	DATE : MAR. 2012
CHECKED BY :	S. COOK	DATE : JUNE 2012
DRAWN BY :	CCJ	10/99
CHECKED BY :	RWW	03/00

STD. NO. CW9005

G:\OR Projects\OR1100 - NCDOT Group W\430162\Structures\430162_STR_RCBC04.dgn
6/5/2013 1100_PDF_full.pltcfg 1100_str.tbl

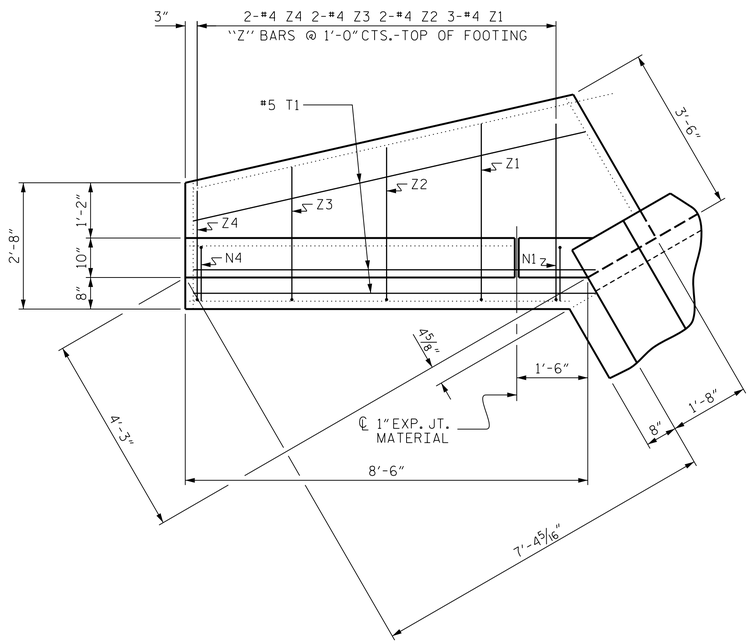

PLAN

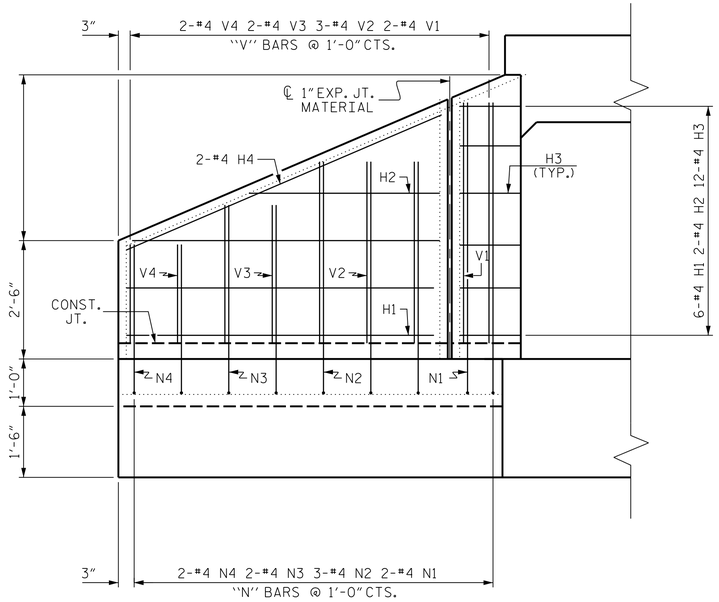

ELEVATION

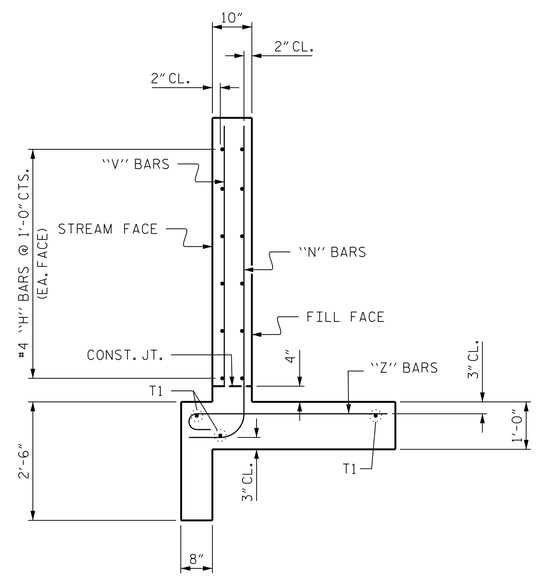

TYPICAL WING SECTION

BAR TYPES

ALL BAR DIMENSIONS ARE OUT TO OUT.

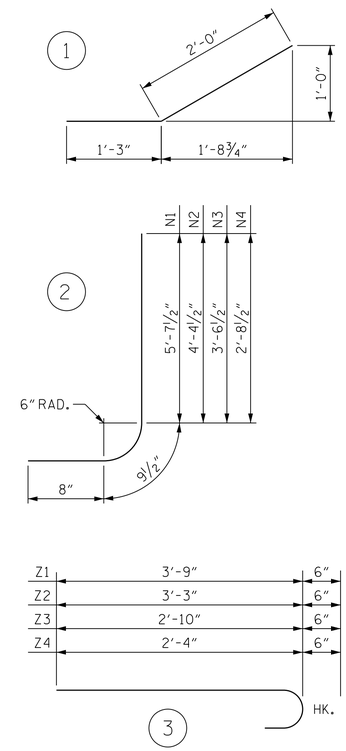

BILL OF MATERIAL

BAR	NO.	SIZE	TYPE	LENGTH	WEIGHT
H1	12	#4	STR	6'-6"	52
H2	4	#4	STR	4'-0"	11
H3	24	#4	1	3'-3"	52
H4	4	#4	STR	7'-3"	19
N1	4	#4	2	7'-1"	19
N2	6	#4	2	5'-10"	23
N3	4	#4	2	5'-0"	13
N4	4	#4	2	4'-2"	11
T1	6	#5	STR	8'-6"	53
V1	4	#4	STR	5'-1"	14
V2	6	#4	STR	3'-10"	15
V3	4	#4	STR	2'-11"	8
V4	4	#4	STR	2'-1"	6
Z1	6	#4	3	4'-3"	17
Z2	4	#4	3	3'-9"	10
Z3	4	#4	3	3'-4"	9
Z4	4	#4	3	2'-10"	8

REINFORCING STEEL FOR 2 WINGS 340 LBS

CLASS A CONCRETE
- 2 WINGS 5.0 CY
- 1 HEADWALL 0.7 CY
- 1 END CURTAIN WALL 0.9 CY
- TOTAL 6.6 CY

PROJECT NO. 17BP.14.R.39

HAYWOOD COUNTY

STATION: 13+06.00 -L-

SHEET 5 OF 7

STATE OF NORTH CAROLINA
DEPARTMENT OF TRANSPORTATION
RALEIGH

DOWNSTREAM STANDARD WINGS FOR CONCRETE BOX CULVERT

H = 5'-0" SLOPE = 2:1

90° SKEW

NORTH CAROLINA PROFESSIONAL SEAL 14047 ENGINEER STEPHEN D. COOK

REGISTERED ENGINEER 6/5/2013

THE LOUIS BERGER GROUP, Inc.
1001 Wade Avenue, Suite 400
Raleigh, NC 27605-3322

REVISIONS						SHEET NO.
NO.	BY:	DATE:	NO.	BY:	DATE:	C-5
1			3			TOTAL SHEETS
2			4			7

STD. NO. CW9005

ASSEMBLED BY :	R. KNIGHT	DATE :	MAR. 2012
CHECKED BY :	S. COOK	DATE :	JUNE 2012
DRAWN BY :	CCJ 10/99		
CHECKED BY :	RWW 03/00		

G:\OR Projects\OR1100 - NCDOT Group W\430162\Structures\430162_STR_RCBC05.dgn 6/5/2013 1100_PDF_full.pltcfg 1100_str.tbl

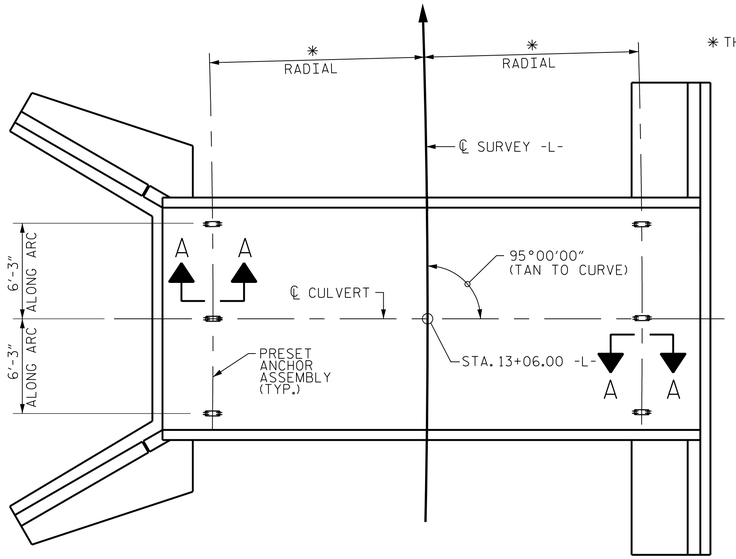

* THIS DIMENSION TO BE FURNISHED BY THE ENGINEER.

PLAN

SHOWING : GUARDRAIL ANCHOR ASSEMBLY SPACING.

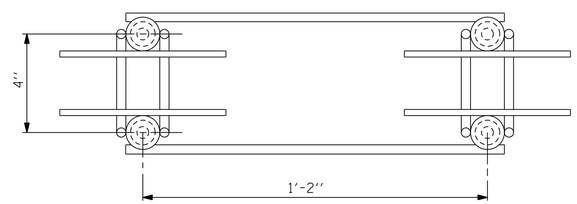

PLAN

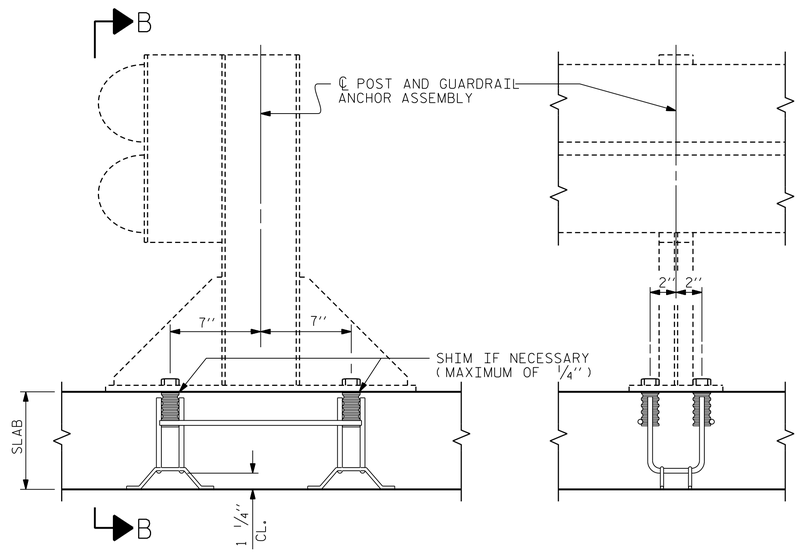

SECTION A-A

SECTION B-B

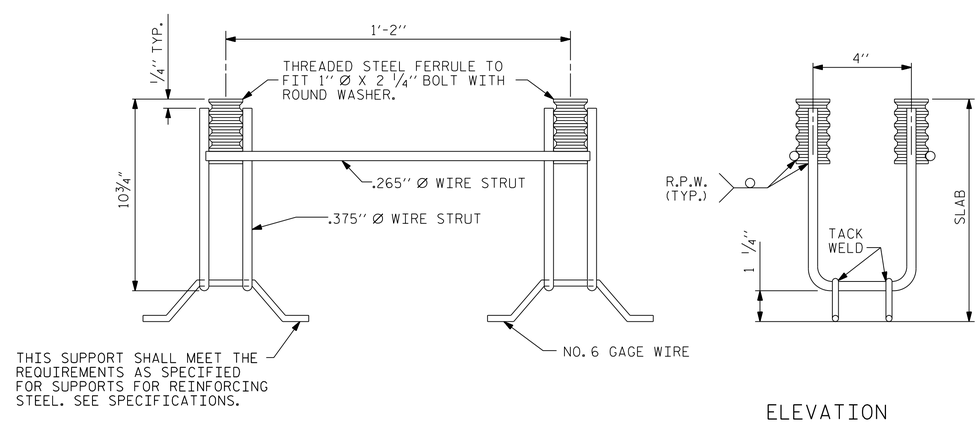

ELEVATION

GUARDRAIL ANCHOR ASSEMBLY FOR CULVERTS

NOTES

THE GUARDRAIL ANCHOR ASSEMBLY FOR CULVERTS SHALL CONSIST OF THE FOLLOWING COMPONENTS :

A. FERRULES SHALL BE MADE FROM STEEL MEETING THE REQUIREMENTS OF AASHTO M169, GRADE 12L14 AND SHALL HAVE A MINIMUM LENGTH OF THREADS OF 2 1/2".

B. 4 - 1" Ø X 2 1/4" BOLTS WITH WASHERS. BOLTS SHALL CONFORM TO THE REQUIREMENTS OF ASTM A307. BOLTS AND WASHERS SHALL BE GALVANIZED. (AT THE CONTRACTOR'S OPTION, STAINLESS STEEL BOLTS AND WASHERS MAY BE USED AS AN ALTERNATE FOR THE 1" Ø X 2 1/4" GALVANIZED BOLTS AND WASHERS. THEY SHALL CONFORM TO OR EXCEED THE MECHANICAL REQUIREMENTS OF ASTM A307. THE USE OF THIS ALTERNATE SHALL BE APPROVED BY THE ENGINEER.)

C. WIRE STRUTS SHOWN IN THE GUARDRAIL ANCHOR ASSEMBLY FOR CULVERTS DETAIL ARE MINIMUM ALLOWABLE SIZE AND SHALL HAVE A MINIMUM TENSILE STRENGTH OF 100,000 P.S.I. AS AN OPTION, A 7/16" Ø WIRE STRUT WITH A MINIMUM TENSILE STRENGTH OF 90,000 PSI IS ACCEPTABLE.

GUARDRAIL ANCHOR ASSEMBLY WITH BOLTS SHALL BE ASSEMBLED IN THE SHOP. BOLT THREADS MAY BE RECUT AS NECESSARY TO INSURE FIT.

THE COST OF THE GUARDRAIL ANCHOR ASSEMBLY FOR CULVERTS COMPLETE IN PLACE, SHALL BE INCLUDED IN THE UNIT CONTRACT PRICE BID FOR CLASS "A" CONCRETE.

FERRULES TO BE PLUGGED DURING POURING OF SLAB AS RECOMMENDED BY THE MANUFACTURER.

AT THE CONTRACTOR'S OPTION, FERRULES WITH OPEN OR CLOSED ENDS MAY BE USED.

PAYMENT FOR GUARDRAIL, POSTS, AND POST BASE PLATES IS INCLUDED IN ROADWAY PAY ITEMS.

SLAB REINFORCING STEEL MAY BE SHIFTED AS NECESSARY TO CLEAR GUARDRAIL ANCHOR ASSEMBLY. CARE SHOULD BE TAKEN TO KEEP THE SHIFTING OF REINFORCING STEEL TO A MINIMUM.

THE CONTRACTOR MAY USE ADHESIVELY ANCHORED ANCHOR BOLTS IN PLACE OF GUARDRAIL ANCHOR ASSEMBLY. LEVEL TWO FIELD TESTING IS REQUIRED, AND THE YIELD LOAD OF THE 1" Ø BOLT IS 21.8 KIPS. FOR ADHESIVELY ANCHORED ANCHOR BOLTS OR DOWELS, SEE STANDARD SPECIFICATIONS.

PROJECT NO. 17BP.14.R.39
HAYWOOD COUNTY
STATION: 13+06.50 -L-

SHEET 6 OF 7

STATE OF NORTH CAROLINA
DEPARTMENT OF TRANSPORTATION
RALEIGH

STANDARD

ANCHORAGE DETAILS FOR GUARDRAIL ANCHOR ASSEMBLY FOR CULVERTS

NORTH CAROLINA PROFESSIONAL SEAL 14047 ENGINEER STEPHEN D. COOK

REGISTERED ENGINEER
6/5/2013

THE LOUIS BERGER GROUP, Inc.
1001 Wade Avenue, Suite 400
Raleigh, NC 27605-3322

REVISIONS						
NO.	BY:	DATE:	NO.	BY:	DATE:	
1			3			
2			4			

SHEET NO. C-6
TOTAL SHEETS 7

ASSEMBLED BY : R. KNIGHT		DATE : MAR. 2012	
CHECKED BY : S. COOK		DATE : JUNE 2012	
DRAWN BY : FCJ 6/88	REV. 7/10/01	LES/RDR	
CHECKED BY : ARB 6/88	REV. 5/7/03	RWW/JTE	
	REV. 5/1/06R	KMM/GM	

STD. NO. GRA1

G:\OR Projects\OR1100 - NCDOT Group W\430162\Structures\430162_STR_RCBC06.dgn 6/5/2013 10:59:41 AM 1100_PDF_full.pltcfg 1100_str.tbl

LOAD AND RESISTANCE FACTOR RATING (LRFR) SUMMARY FOR REINFORCED CONCRETE BOX CULVERTS

LEVEL		VEHICLE	WEIGHT (W) (TONS)	CONTROLLING LOAD RATING (#)	MINIMUM RATING FACTORS (RF)	TONS = W × RF	STRENGTH I LIMIT STATE									COMMENT NUMBER
							LIVE-LOAD FACTORS (γ_{LL})	MOMENT				SHEAR				
								RATING FACTOR	BOX NO.	ELEMENT TYPE	DISTANCE FROM LEFT END OF ELEMENT (ft)	RATING FACTOR	BOX NO.	ELEMENT TYPE	DISTANCE FROM LEFT END OF ELEMENT (ft)	
DESIGN LOAD RATING		HL-93 (INVENTORY)	N/A	1	1.06	--	1.75	3.11	2	TOP SLAB	16.00	1.06	2	TOP SLAB	16.00	
		HL-93 (OPERATING)	N/A		1.37	--	1.35	4.03	2	TOP SLAB	16.00	1.37	2	TOP SLAB	16.00	
		HS-20 (INVENTORY)	36.000	2	1.29	46.44	1.75	3.73	2	TOP SLAB	16.00	1.29	2	TOP SLAB	16.00	
		HS-20 (OPERATING)	36.000		1.67	60.12	1.35	4.84	2	TOP SLAB	16.00	1.67	2	TOP SLAB	16.00	
LEGAL LOAD RATING	SINGLE VEHICLE (SV)	SNSH	13.500		2.65	35.78	1.40	6.79	2	TOP SLAB	16.00	2.65	2	TOP SLAB	16.00	
		SNGARBS2	20.000		2.43	48.60	1.40	6.36	2	TOP SLAB	16.00	2.43	2	TOP SLAB	16.00	
		SNAGRIS2	22.000		2.65	58.30	1.40	6.79	2	TOP SLAB	16.00	2.65	2	TOP SLAB	16.00	
		SNCOTTS3	27.250	3	1.33	36.24	1.40	3.88	2	TOP SLAB	16.00	1.33	2	TOP SLAB	16.00	
		SNAGGRS4	34.925		1.69	59.02	1.40	4.12	2	TOP SLAB	16.00	1.69	2	TOP SLAB	16.00	
		SNS5A	35.550		1.55	55.10	1.40	3.93	2	TOP SLAB	16.00	1.55	2	TOP SLAB	16.00	
		SNS6A	39.950		1.53	61.12	1.40	3.92	2	TOP SLAB	16.00	1.53	2	TOP SLAB	16.00	
		SNS7B	42.000		1.53	64.26	1.40	3.92	2	TOP SLAB	16.00	1.53	2	TOP SLAB	16.00	
	TRUCK TRACTOR SEMI-TRAILER (TTST)	TNAGRIT3	33.000		2.36	77.88	1.40	4.52	2	TOP SLAB	16.00	2.36	2	TOP SLAB	16.00	
		TNT4A	33.075		1.59	52.59	1.40	4.14	2	TOP SLAB	16.00	1.59	2	TOP SLAB	16.00	
		TNT6A	41.600		1.49	61.98	1.40	3.75	2	TOP SLAB	16.00	1.49	2	TOP SLAB	16.00	
		TNT7A	42.000		1.54	64.68	1.40	3.95	2	TOP SLAB	16.00	1.54	2	TOP SLAB	16.00	
		TNT7B	42.000		1.50	63.00	1.40	3.74	2	TOP SLAB	16.00	1.50	2	TOP SLAB	16.00	
		TNAGRIT4	43.000		1.59	68.37	1.40	4.14	2	TOP SLAB	16.00	1.59	2	TOP SLAB	16.00	
		TNAGT5A	45.000		1.58	71.10	1.40	4.14	2	TOP SLAB	16.00	1.58	2	TOP SLAB	16.00	
		TNAGT5B	45.000		1.58	71.10	1.40	4.14	2	TOP SLAB	16.00	1.58	2	TOP SLAB	16.00	

LOAD FACTORS:

DESIGN LOAD RATING FACTORS

LOAD TYPE	MAX FACTOR	MIN FACTOR
DC	1.25	0.90
DW	1.50	0.65
EV	1.30	0.90
EH	1.35	0.90
ES	1.35	0.90
	1.75	--
WA	1.00	--

NOTE:

RATING FACTORS ARE BASED ON THE STRENGTH I LIMIT STATE.

COMMENTS:

1.
2.
3.
4.

#	CONTROLLING LOAD RATING
1	DESIGN LOAD RATING (HL-93)
2	DESIGN LOAD RATING (HS-20)
3	LEGAL LOAD RATING **
**	SEE CHART FOR VEHICLE TYPE

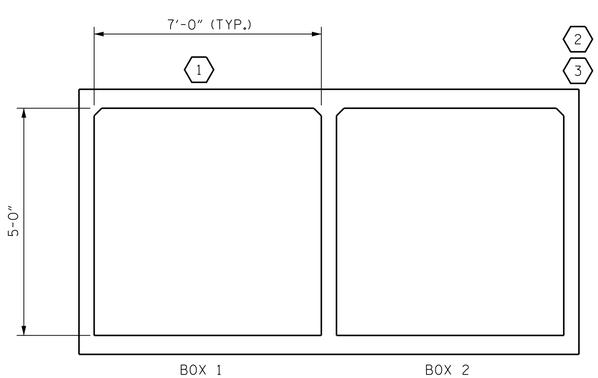

LRFR SUMMARY

(LOOKING DOWNSTREAM)

PROJECT NO. 17BP.14.R.39

HAYWOOD COUNTY

STATION: 13+06.50 -L-

SHEET 7 OF 7

STATE OF NORTH CAROLINA
DEPARTMENT OF TRANSPORTATION
RALEIGH

STANDARD

LRFR SUMMARY FOR REINFORCED CONCRETE BOX CULVERTS
(NON-INTERSTATE TRAFFIC)

NORTH CAROLINA PROFESSIONAL SEAL 14047 ENGINEER STEPHEN D. COOK

REGISTERED ENGINEER
6/5/2013

THE LOUIS BERGER GROUP, Inc.
1001 Wade Avenue, Suite 400

REVISIONS						SHEET NO.
NO.	BY:	DATE:	NO.	BY:	DATE:	C-7
1			3			TOTAL SHEETS
2			4			7

STD. NO. LRFR5

ASSEMBLED BY : R. KNIGHT		DATE : MAR. 2012	
CHECKED BY : S. COOK		DATE : JUNE 2012	
DRAWN BY : WMC 7/11	REV. 10/1/11	MAA/GM	
CHECKED BY : GM 7/11			

G:\OR Projects\OR1100 - NCDOT Group W\430162\Structures\430162_STR_RCBC07.dgn
6/5/2013 10:59:43 AM 1100_PDF_full.pltcfg 1100_str.tbl