STATE	STATE PROJECT REFERENCE NO.	SHEET NO.	TOTAL SHEETS
N.C.	B-3457	1	

STATE PROJ. NO.	F.A. PROJ. NO.	DESCRIPTION
33077.2.2		PE, UTIL., R/W
		CONST.

STATE OF NORTH CAROLINA
DIVISION OF HIGHWAYS

GRAHAM COUNTY

LOCATION: BRIDGE #68 OVER PANTHER CREEK ON SR 1232 (PANTHER CREEK RD.)

TYPE OF WORK: GRADING, DRAINAGE, PAVING & STRUCTURE

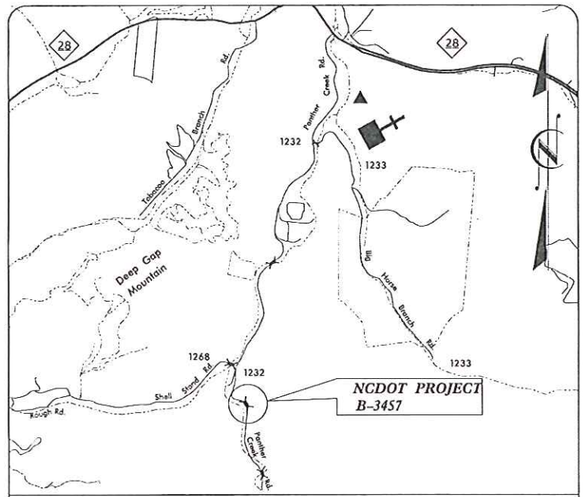

VICINITY MAP

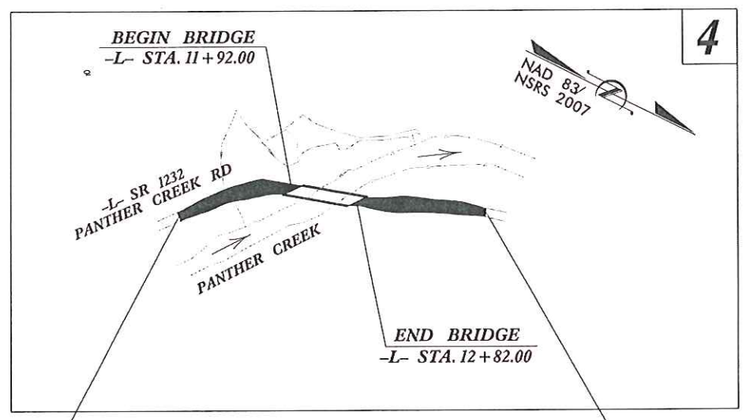

BEGIN TIP PROJECT B-3457
-L- STA 10+30.00

END TIP PROJECT B-3457
-L- STA. 14+60.00

CONTRACT: DN00212 TIP PROJECT: B-3457

GRAPHIC SCALES	DESIGN DATA	PROJECT LENGTH
20 10 0 20 40 PLANS	ADT 2010 = 190	LENGTH ROADWAY TIP PROJECT B-3457 = 0.064 MILES
20 10 0 20 40 PROFILE (HORIZONTAL)	ADT 2030 = 380	LENGTH STRUCTURE TIP PROJECT B-3457 = 0.017 MILES
4 2 0 4 8 PROFILE (VERTICAL)	DHV = 50 %	TOTAL LENGTH TIP PROJECT B-3457 = 0.081 MILES
	D = 10 %	
	T = 6 % *	
	V = 40 MPH	
	* TTST 4% DUAL 2%	

Prepared for the North Carolina Department of Transportation in the Office of:
WETHERILL ENGINEERING
559 JONES FRANKLIN ROAD
SUITE 164
Raleigh, N.C. 27606
License No. F-0377
Bus 919 851 8077
Fax 919 851 8071

2012 STANDARD SPECIFICATIONS

RIGHT OF WAY DATE:

LETTING DATE:
JULY 23, 2013

EDWARD G. WETHERILL, PE
PROJECT ENGINEER

BOB A. MAY, PE
PROJECT DESIGN ENGINEER

HYDRAULICS ENGINEER
NORTH CAROLINA PROFESSIONAL SEAL 023993 ENGINEER MAX S. PRICE
SIGNATURE: 6/13/13 P.E.

ROADWAY DESIGN ENGINEER
NORTH CAROLINA PROFESSIONAL SEAL 21116 ENGINEER BOB A. MAY
SIGNATURE: 6/13/13 P.E.

STATE OF NORTH CAROLINA DEPARTMENT OF TRANSPORTATION

8:00:16 AM
P:\DIO\DIZLOIB-345\Roadway\Proj\B-3457 Rdy tsh.dgn
6/13/2013

WETHERILL ENGINEERING
559 James Franklin Rd Suite 164
Raleigh, N.C. 27606
License No. F-0377
Bus. 919 851 8977
Fax: 919 851 8107
TRANSPORTATION PLANNING/DESIGN - BRIDGE/STRUCTURE DESIGN
CAD/SITE DESIGN - GIS/GPS - CONSTRUCTION OBSERVATION

PROJECT REFERENCE NO.	SHEET NO.
B-3457	1-A

ROADWAY DESIGN ENGINEER

NORTH CAROLINA PROFESSIONAL SEAL 21116 ENGINEER BOB A. WAY
5/22/19

GENERAL NOTES

GENERAL NOTES: 2012 SPECIFICATIONS
EFFECTIVE: 01-17-12
REVISED: 11/01/11

GRADING AND SURFACING OR RESURFACING AND WIDENING:

THE GRADE LINES SHOWN DENOTE THE FINISHED ELEVATION OF THE PROPOSED SURFACING AT GRADE POINTS SHOWN ON THE TYPICAL SECTIONS. WHERE NO GRADE LINES ARE SHOWN, THE PROFILES SHOWN DENOTE THE TOP ELEVATION OF THE EXISTING PAVEMENT ALONG THE CENTER LINE OF SURVEY ON WHICH THE PROPOSED RESURFACING WILL BE PLACED. GRADE LINES MAY BE ADJUSTED BY THE ENGINEER IN ORDER TO SECURE A PROPER TIE-IN.

CLEARING:

CLEARING ON THIS PROJECT SHALL BE PERFORMED TO THE LIMITS ESTABLISHED BY METHOD II.

SUPERELEVATION:

ALL CURVES ON THIS PROJECT SHALL BE SUPERELEVATED IN ACCORDANCE WITH STD. NO. 225.04 USING THE RATE OF SUPERELEVATION AND RUNOFF SHOWN ON THE PLANS. SUPERELEVATION IS TO BE REVOLVED ABOUT THE GRADE POINTS SHOWN ON THE TYPICAL SECTIONS.

SHOULDER CONSTRUCTION:

ASPHALT, EARTH, AND CONCRETE SHOULDER CONSTRUCTION ON THE HIGH SIDE OF SUPERELEVATED CURVES SHALL BE IN ACCORDANCE WITH STD. NO. 560.01.

GUARDRAIL:

THE GUARDRAIL LOCATIONS SHOWN ON THE PLANS MAY BE ADJUSTED DURING CONSTRUCTION AS DIRECTED BY THE ENGINEER. THE CONTRACTOR SHOULD CONSULT WITH THE ENGINEER PRIOR TO ORDERING GUARDRAIL MATERIAL.

TEMPORARY SHORING:

SHORING REQUIRED FOR THE MAINTENANCE OF TRAFFIC WILL BE PAID FOR AS "EXTRA WORK" IN ACCORDANCE WITH SECTION 104-7.

SUBSURFACE PLANS:

NO SUBSURFACE PLANS ARE AVAILABLE ON THIS PROJECT. THE CONTRACTOR SHOULD MAKE HIS OWN INVESTIGATION AS TO THE SUBSURFACE CONDITIONS.

END BENTS:

THE ENGINEER SHALL CHECK THE STRUCTURE END BENT PLANS, DETAILS, AND CROSS-SECTION PRIOR TO SETTING OF THE SLOPE STAKES FOR THE EMBANKMENT OR EXCAVATION APPROACHING A BRIDGE.

LIST ROADWAY STANDARD DRAWINGS

EFF. 01-17-12

2012 ROADWAY ENGLISH STANDARD DRAWINGS

The following Roadway Standards as appear in "Roadway Standard Drawings" Highway Design Branch – N. C. Department of Transportation – Raleigh, N. C., Dated January, 2012 are applicable to this project and by reference hereby are considered a part of these plans:

STD.NO.	TITLE
DIVISION 2 – EARTHWORK	
200.02	Method of Clearing – Method II
225.02	Guide for Grading Subgrade – Secondary and Local
225.04	Method of Obtaining Superelevation – Two Lane Pavement
DIVISION 3 – PIPE CULVERTS	
300.01	Method of Pipe Installation
DIVISION 5 – SUBGRADE, BASES AND SHOULDERS	
560.01	Method of Shoulder Construction – High Side of Superelevated Curve – Method I
DIVISION 8 – INCIDENTALS	
838.01	Concrete Endwall for Single and Double Pipe Culverts – 15" thru 48" Pipe 90 Skew
838.11	Brick Endwall for Single and Double Pipe Culverts – 15" thru 48" Pipe 90 Skew
838.80	Precast Endwalls – 12" thru 72" Pipe 90 Skew
846.01	Concrete Curb, Gutter and Curb & Gutter
862.01	Guardrail Placement
862.02	Guardrail Installation
862.03	Structure Anchor Units
876.02	Guide for Rip Rap at Pipe Outlets
1101.03	Temporary Road Closures
1110.01	Stationary Work Zone Signs – Mounting Height & Lateral Clearance
1145.01	Barricades – Type III
1205.12	Pavement Markings – Bridge
1250.01	Pavement Marker Spacing
1251.01	Raised Pavement Markers – Permanent and Temporary
1261.01	Guardrail and Barrier Delineator Spacing
1261.02	Guardrail and Barrier Delineator Types
1262.01	Guardrail End Delineation

INDEX OF SHEETS

Sheet Number	Sheet
1	Title Sheet
1-A	Index of Sheets, General Notes and List of Standards
1-B	Conventional Symbols
2	Typical Sections
2-A	Detail for Modified Concrete Flume
2-B	Detail for Type III – Shop Curved Structure Anchor Unit
3	Summary of Quantities
3-A	Summary of Earthwork, Drainage Summary, Guardrail Summary and Shoulder Berm Gutter Summary
4	Plan and Profile
TCP-1	Traffic Control Plan
EC-1 Thru EC-3	Erosion Control Plans
RF-1	Reforestation Detail Sheet
X-1	Cross-Section Summary Sheet
X-1 Thru X-6	Cross-Sections
S-1 Thru S-22	Structure Plans
SN	Standard Notes

04/16/11

PROJECT REFERENCE NO.	SHEET NO.
B-3457	1-B

Note: Not to Scale

**S.U.E. = Subsurface Utility Engineering*

STATE OF NORTH CAROLINA
DIVISION OF HIGHWAYS

CONVENTIONAL PLAN SHEET SYMBOLS

BOUNDARIES AND PROPERTY:

- State Line
- County Line
- Township Line
- City Line
- Reservation Line
- Property Line
- Existing Iron Pin — EIP
- Property Corner
- Property Monument — ECM
- Parcel/Sequence Number — 23
- Existing Fence Line
- Proposed Woven Wire Fence
- Proposed Chain Link Fence
- Proposed Barbed Wire Fence
- Existing Wetland Boundary — W.B
- Proposed Wetland Boundary — W.B
- Existing Endangered Animal Boundary — EAB
- Existing Endangered Plant Boundary — EPB
- Known Soil Contamination: Area or Site
- Potential Soil Contamination: Area or Site

BUILDINGS AND OTHER CULTURE:

- Gas Pump Vent or U/G Tank Cap
- Sign
- Well
- Small Mine
- Foundation
- Area Outline
- Cemetery
- Building
- School
- Church
- Dam

HYDROLOGY:

- Stream or Body of Water
- Hydro, Pool or Reservoir
- Jurisdictional Stream — JS
- Buffer Zone 1 — BZ 1
- Buffer Zone 2 — BZ 2
- Flow Arrow
- Disappearing Stream
- Spring
- Wetland
- Proposed Lateral, Tail, Head Ditch — FLOW
- False Sump

RAILROADS:

- Standard Gauge — CSX TRANSPORTATION
- RR Signal Milepost — MILEPOST 35
- Switch — SWITCH
- RR Abandoned
- RR Dismantled

RIGHT OF WAY:

- Baseline Control Point
- Existing Right of Way Marker
- Existing Right of Way Line
- Proposed Right of Way Line — RW
- Proposed Right of Way Line with Iron Pin and Cap Marker — RW
- Proposed Right of Way Line with Concrete or Granite R/W Marker — RW
- Proposed Control of Access Line with Concrete C/A Marker — CA
- Existing Control of Access — CA
- Proposed Control of Access — CA
- Existing Easement Line — E
- Proposed Temporary Construction Easement — E
- Proposed Temporary Drainage Easement — TDE
- Proposed Permanent Drainage Easement — PDE
- Proposed Permanent Drainage / Utility Easement — DUE
- Proposed Permanent Utility Easement — PUE
- Proposed Temporary Utility Easement — TUE
- Proposed Aerial Utility Easement — AUE
- Proposed Permanent Easement with Iron Pin and Cap Marker

ROADS AND RELATED FEATURES:

- Existing Edge of Pavement
- Existing Curb
- Proposed Slope Stakes Cut — C
- Proposed Slope Stakes Fill — F
- Proposed Curb Ramp — CR
- Existing Metal Guardrail
- Proposed Guardrail
- Existing Cable Guiderail
- Proposed Cable Guiderail
- Equality Symbol
- Pavement Removal

VEGETATION:

- Single Tree
- Single Shrub
- Hedge
- Woods Line
- Orchard
- Vineyard — Vineyard

EXISTING STRUCTURES:

MAJOR:

- Bridge, Tunnel or Box Culvert — CONC
- Bridge Wing Wall, Head Wall and End Wall — CONC WW

MINOR:

- Head and End Wall — CONC HW
- Pipe Culvert
- Footbridge
- Drainage Box: Catch Basin, DI or JB — CB
- Paved Ditch Gutter
- Storm Sewer Manhole — S
- Storm Sewer — S

UTILITIES:

POWER:

- Existing Power Pole
- Proposed Power Pole
- Existing Joint Use Pole
- Proposed Joint Use Pole
- Power Manhole — P
- Power Line Tower
- Power Transformer
- U/G Power Cable Hand Hole
- H-Frame Pole
- Recorded U/G Power Line — P
- Designated U/G Power Line (S.U.E.*) — P

TELEPHONE:

- Existing Telephone Pole
- Proposed Telephone Pole
- Telephone Manhole — T
- Telephone Booth
- Telephone Pedestal — T
- Telephone Cell Tower
- U/G Telephone Cable Hand Hole — HH
- Recorded U/G Telephone Cable — T
- Designated U/G Telephone Cable (S.U.E.*) — T
- Recorded U/G Telephone Conduit — TC
- Designated U/G Telephone Conduit (S.U.E.*) — TC
- Recorded U/G Fiber Optics Cable — T FO
- Designated U/G Fiber Optics Cable (S.U.E.*) — T FO

WATER:

- Water Manhole — W
- Water Meter
- Water Valve
- Water Hydrant
- Recorded U/G Water Line — W
- Designated U/G Water Line (S.U.E.*) — W
- Above Ground Water Line — A/G Water

TV:

- TV Satellite Dish
- TV Pedestal — C
- TV Tower
- U/G TV Cable Hand Hole — HH
- Recorded U/G TV Cable — TV
- Designated U/G TV Cable (S.U.E.*) — TV
- Recorded U/G Fiber Optic Cable — TV FO
- Designated U/G Fiber Optic Cable (S.U.E.*) — TV FO

GAS:

- Gas Valve
- Gas Meter
- Recorded U/G Gas Line — G
- Designated U/G Gas Line (S.U.E.*) — G
- Above Ground Gas Line — A/G Gas

SANITARY SEWER:

- Sanitary Sewer Manhole
- Sanitary Sewer Cleanout
- U/G Sanitary Sewer Line — SS
- Above Ground Sanitary Sewer — A/G Sanitary Sewer
- Recorded SS Forced Main Line — FSS
- Designated SS Forced Main Line (S.U.E.*) — FSS

MISCELLANEOUS:

- Utility Pole
- Utility Pole with Base
- Utility Located Object
- Utility Traffic Signal Box — S
- Utility Unknown U/G Line — ?U/L
- U/G Tank; Water, Gas, Oil
- Underground Storage Tank, Approx. Loc. — UST
- A/G Tank; Water, Gas, Oil
- Geoenvironmental Boring
- U/G Test Hole (S.U.E.*)
- Abandoned According to Utility Records — AATUR
- End of Information — E.O.I.

PROJECT REFERENCE NO.	SHEET NO.
B-3457	2
ROADWAY DESIGN ENGINEER	PAVEMENT DESIGN ENGINEER

NORTH CAROLINA PROFESSIONAL SEAL 24112 ENGINEER BOB A. MAY 7/9/13

WETHERILL ENGINEERING
559 Jones Franklin Rd. Suite 164
Raleigh, N.C. 27606
License No. F-0377
Bus: 919 851 8077
Fax: 919 851 8107
TRANSPORTATION PLANNING/DESIGN - BRIDGE/STRUCTURE DESIGN
CIVIL/SITE DESIGN - GIS/GPS - CONSTRUCTION OBSERVATION

PAVEMENT SCHEDULE

C1	PROP. APPROX. 2½" ASPHALT CONCRETE SURFACE COURSE, TYPE SF9.5A, AT AN AVERAGE RATE OF 137.50 LBS. PER SQ. YD. IN EACH OF TWO LAYERS.
E1	PROP. APPROX. 5½" ASPHALT CONCRETE BASE COURSE, TYPE B25.0B, AT AN AVERAGE RATE OF 627 LBS. PER SQ. YD.
E2	PROP. VAR. DEPTH ASPHALT CONCRETE BASE COURSE, TYPE B25.0B, AT AN AVERAGE RATE OF 114 LBS. PER SQ. YD. PER 1" DEPTH. TO BE PLACED IN LAYERS NOT LESS THAN 3" IN DEPTH OR GREATER THAN 5 1/2" IN DEPTH.
R1	SHOULDER BERM GUTTER
T	EARTH MATERIAL.

NOTE: PAVEMENT EDGE SLOPES ARE 1:1 UNLESS SHOWN OTHERWISE.

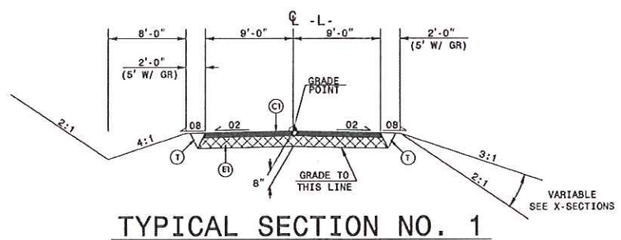

TYPICAL SECTION NO. 1

USE TYPICAL SECTION NO. 1 AS FOLLOWS:
-L- STA. 10+40.00 TO -L- STA. 11+92.00 (BEGIN BRIDGE)
-L- STA. 12+82.00 (END BRIDGE) TO -L- STA. 14+55.00

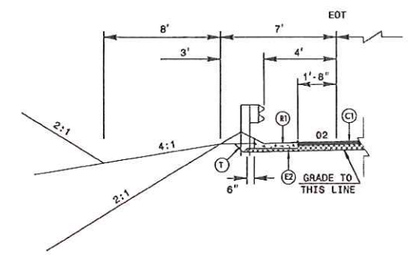

TYPICAL SECTION NO. 1A

USE IN CONJUNCTION WITH TYPICAL SECTION NO. 1:
-L- STA. 12+94.45 TO -L- STA. 13+05.80 LT.

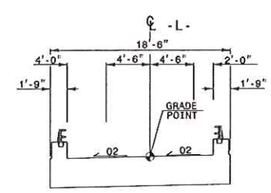

TYPICAL SECTION NO. 2

USE TYPICAL SECTION NO. 2 AS FOLLOWS:
-L- STA. 11+92.00 TO -L- STA. 12+82.00

6/2/99
10:33:35 AM
P:\2010\10121.01 B-3457\Roadway\Proj\B3457_Rdy_typ.dgn
7/2/2013

PROJECT REFERENCE NO.	SHEET NO.
B-3457	2-A

STATE OF
NORTH CAROLINA
DEPT. OF TRANSPORTATION
DIVISION OF HIGHWAYS
RALEIGH, N.C.

ENGLISH DETAIL DRAWING FOR
MODIFIED CONCRETE FLUME
WITH CONCRETE OR RIP-RAP DITCH

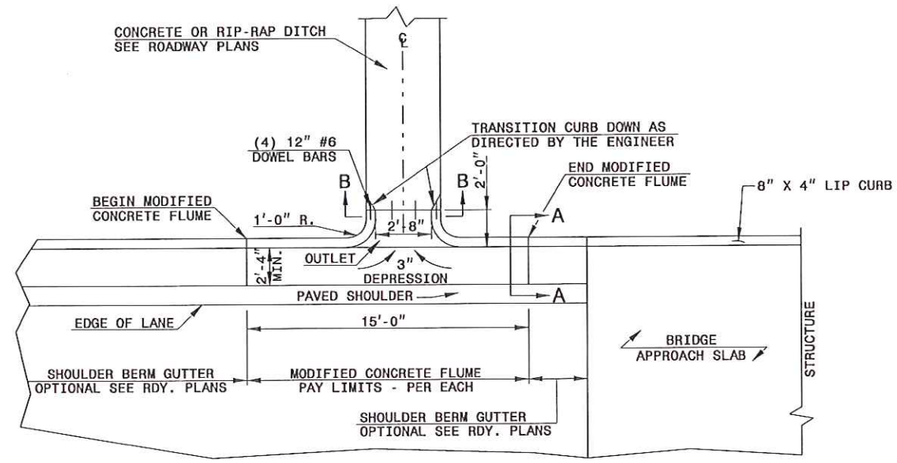

PLAN VIEW

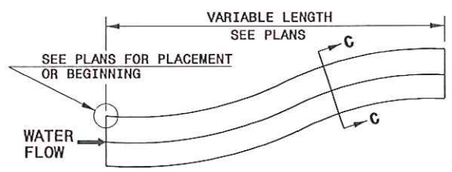

DOWNGRADE OR SAG

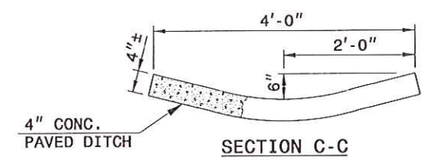

SECTION C-C

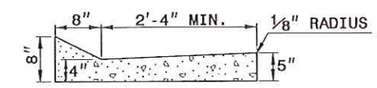

SECTION A-A

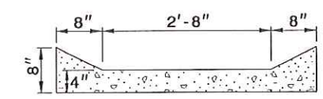

SECTION B-B

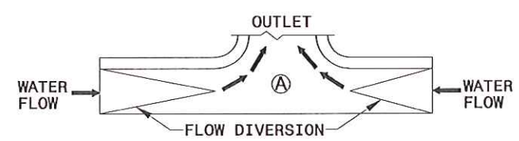

SAG

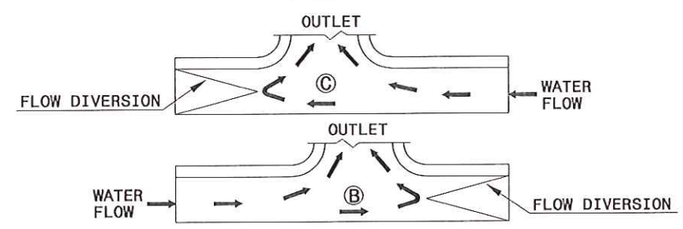

DOWN GRADE

FLOW DIVERSION EXAMPLES

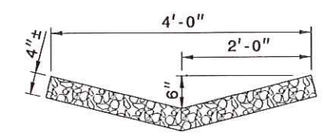

RIP-RAP LINED DITCH

NOTES:

- CONSTRUCT MODIFIED CONCRETE FLUME AND SHOULDER BERM GUTTER IN ACCORDANCE WITH THIS DETAIL.
- CONSTRUCT CONCRETE DITCH IN ACCORDANCE WITH STD. DWG. NO. 850.01.
- CONSTRUCT RIP RAP LINED DITCH IN ACCORDANCE WITH THIS DETAIL, IF CALLED FOR IN PLANS.
- CONCRETE OR RIP RAP LINED DITCH SHALL BE THE TYPE AND LENGTH SPECIFIED BY THE ROADWAY PLANS. THE DITCH SHALL TERMINATE AS SHOWN ON THE PLANS. IF NO TERMINATION IS INDICATED PLACE RIP-RAP AT THE END OF THE DITCH AS INDICATED BY STD. DWG. 876.02 FOR AN 18" PIPE. TRANSITIONS FROM THE DITCH TO TERMINATION SHALL BE AS DIRECTED BY THE ENGINEER.
- MODIFICATIONS SHALL BE AS DICTATED BY SITE CONDITIONS AND DIRECTED BY THE ENGINEER.

SHEET 1 OF 1
MODFLMDTCH

STATE OF
NORTH CAROLINA
DEPT. OF TRANSPORTATION
DIVISION OF HIGHWAYS
RALEIGH, N.C.

ENGLISH DETAIL DRAWING FOR
MODIFIED CONCRETE FLUME
WITH CONCRETE OR RIP-RAP DITCH

SHEET 1 OF 1
MODFLMDTCH

PROJECT SERVICES UNIT
STANDARDS AND SPECIAL DESIGN
Office 919-250-4128 FAX 919-250-4119

SEE PLATE FOR TITLE

ORIGINAL BY: E.E. Ward DATE: Apr. 2002
MODIFIED BY: E.E. Ward DATE: July 2004
CHECKED BY: DATE:
FILE SPEC.: w:details\stand\modifiedflume.dgn

16-MAR-2006 14:32
S:\Contracts\Contracts\Special Details\erieward\usr\details\stand\modifiedflume.dgn
erieward AT PS222243

PROJECT REFERENCE NO.	SHEET NO.
B-3457	2-B

STATE OF
NORTH CAROLINA
DEPT. OF TRANSPORTATION
DIVISION OF HIGHWAYS
RALEIGH, N.C.

ENGLISH DETAIL DRAWING FOR
TYPE III - SHOP CURVED
STRUCTURE ANCHOR UNIT

SHEET 1 OF 1
TYPE III SC

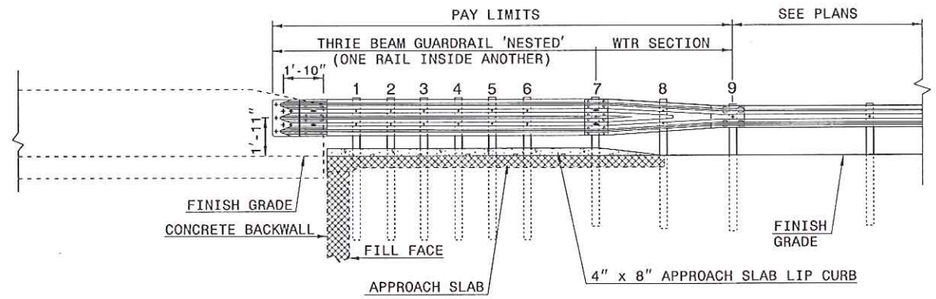

ELEVATION

SEE ROADWAY PLANS FOR END TREATMENT

NOTE:
- **POST NOT REQUIRED FOR SKEW ANGLES GREATER THAN 150° OR LESS THAN 30° UNLESS OTHERWISE DIRECTED BY THE ENGINEER.
- *THE DISTANCE FROM END OF BRIDGE RAIL TO CENTER LINE OF THE FIRST POST SHOULD BE 11½" IF CONCRETE BACKWALL IS NOT PRESENT.
- -SHOULDER BERM GUTTER MUST BE INSTALLED TO THE LIMITS 8" x 4" LIP CURB IS SHOWN IF ANCHOR UNIT IS NOT ADJACENT TO AN APPROACH SLAB.
- -MEASURE GUARDRAIL HEIGHT FROM THE TOP OF ADJACENT SURFACE (SHOULDER, BERM, OR GUTTER).
- -USE NO STEEL POSTS WITHIN THE GUARDRAIL ANCHOR UNIT LIMITS.
- -LAP JOINTS IN THE DIRECTION OF TRAFFIC FLOW.
- -SEE STANDARD 862.03 SHEET 4 FOR POST SECTIONS 1 THRU 9.

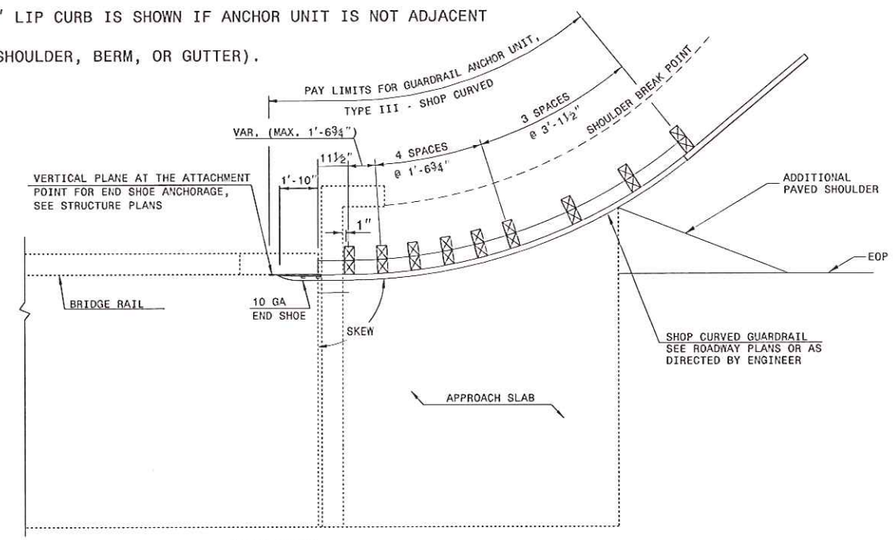

PLAN VIEW

GUARDRAIL ANCHOR UNIT, TYPE III - SHOP CURVED FOR ATTACHMENT TO RAIL ON BRIDGE

STATE OF
NORTH CAROLINA
DEPT. OF TRANSPORTATION
DIVISION OF HIGHWAYS
RALEIGH, N.C.

ENGLISH DETAIL DRAWING FOR
TYPE III - SHOP CURVED
STRUCTURE ANCHOR UNIT

SHEET 1 OF 1
TYPE III SC

CONTRACT STANDARDS
AND DEVELOPMENT UNIT
Office 919-707-6950 FAX 919-250-4119

SEE PLATE FOR TITLE

ORIGINAL BY: E.E.Ward DATE: 4-4-02
MODIFIED BY: T.S.Spell DATE: 5-29-09
CHECKED BY: DATE:
FILE SPEC.: ward:\usr\details\stand\862stds\typeiiisc.dgn

5/14/99
$$$$$$SYSTIME$$$$$
$$$$$$$$$$$$$$$$$$DGN$$$$$$$$$$$$$$$$$$$$
$$$$USERNAME$$$$

STATE OF NORTH CAROLINA
DIVISION OF HIGHWAYS

SUMMARY OF QUANTITIES

0000100000–N	800	MOBILIZATION	1	LS
0000400000–N	801	CONSTRUCTION SURVEYING	1	LS
0030000000–N	SP	BRG APP SUB REG TIER**	1	LS
0043000000–N	226	GRADING	1	LS
0050000000–E	226	SUPP CLEARING & GRUBBING	1	ACR
0057000000–E	226	UNDERCUT EXCAVATION	50	CY
0195000000–E	265	SELECT GRANULAR MATERIAL	50	CY
0196000000–E	270	GEOTEXTILE SOIL STABILIZATION	50	SY
0318000000–E	300	FND CONDIT MATL MINOR STRS	10	TON
0320000000–E	300	FND CONDIT GEOTEXTILE	20	SY
0594000000–E	310	24" CS PIPE CULV 0.064"	32	LF
1220000000–E	545	INCIDENTAL STONE BASE	70	TON
1489000000–E	610	ASP CONC BASE CRS B25.0B	215	TON
1525000000–E	610	ASP CONC SURF CRS SF9.5A	95	TON
1575000000–E	620	ASP FOR PLANT MIX	16	TON
2209000000–E	838	ENDWALLS	1.4	CY
2556000000–E	846	SHOULDER BERM GUTTER	12	LF
2570000000–N	SP	MODIFIED CONCRETE FLUME	1	EA
3420000000–E	SP	PAINTED GALVANIZED STL BM GUARDRAIL	37.5	LF
3420000000–E	SP	PAINTED GALVANIZED STL BM GR SHOP CURVED	25	LF
3435000000–N	SP	PAINTED GALVANIZED ADDITIONAL GUARDRAIL POSTS	5	EA
3435000000–N	SP	PAINTED GALVANIZED GRAU TYPE GRAU 350 TL–2	3	EA
3435000000–N	SP	PAINTED GALVANIZED GRAU TYPE AT–1	1	EA
3435000000–N	SP	PAINTED GALVANIZED GRAU TYPE III	1	EA
3435000000–N	SP	PAINTED GALVANIZED GRAU TYPE III SHOP CURVED	3	EA
3649000000–E	876	RIP RAP, CLASS B	6	TON
3656000000–E	876	GEOTEXTILE FOR DRAINGE	135	SY
4400000000–E	1110	WORK ZONE SIGNS (STAT)	136	SF
4405000000–E	1110	WORK ZONE SIGNS (PORT)	16	SF
4410000000–E	1110	WORK ZONE SIGNS (BARR)	35	SF
4435000000–N	1135	CONES	20	EA
4445000000–E	1145	BARRICADES (TYPE III)	40	LF
6000000000–E	1605	TEMPORARY SILT FENCE	887	LF
6006000000–E	1610	EROS CONTRL STONE CL A	35	TON
6009000000–E	1610	EROS CONTRL STONE CL B	6	TON
6012000000–E	1610	SEDIMENT CONTROL STONE	90	TON
6015000000–E	1615	TEMPORARY MULCHING	0.5	ACR
6018000000–E	1620	SEED FOR TEMP SEEDING	50	LB
6021000000–E	1620	FERT FOR TEMP SEEDING	0.25	TON
6030000000–E	1630	SILT EXCAVATION	6	CY
6036000000–E	1631	MATTING FOR EROS CONTROL	880	SY
6042000000–E	1632	1/4" HARDWARE CLOTH	170	LF
6084000000–E	1660	SEEDING AND MULCHING	0.5	ACR
6090000000–E	1661	SEED FOR REPAIR SEEDING	50	LB
6093000000–E	1661	FERT FOR REPAIR SEEDING	0.25	TON
6096000000–E	1662	SEED FOR SUPP SEEDING	50	LB
6108000000–E	1665	FERTILIZER TOPDRESSING	0.25	TON
6117000000–N	SP	RESPONSE FOR EROS CONTROL	6	EA
8035000000–N	402	REMV EXIST STR 12+37.00	1	LS
8096000000–E	450	PILE EXCAVATION IN SOIL	37	LF
8097000000–E	450	PILE EXCAVATION NOT IN SOIL	63	LF
8121000000–N	412	UNCL STR EXCAV STA 12+37.00	1	LS
8147000000–E	420	REINF CONCRETE DECK SLAB	1582	SF
8161000000–E	420	GROOVING BRIDGE FLOORS	1021	SF
8182000000–E	420	CLASS A CONCRETE (BRIDGE)	54.3	CY
8217000000–E	425	REINF STEEL (BRIDGE)	8095	LB
8280000000–E	440	STRUCTURAL STEEL	1	LS
8364000000–E	450	HP12X53 PILES	100	LF
8517000000–E	460	1'–8"X 9" CONC PARAPET	170.7	LF
8657000000–N	430	ELASTOMERIC BEARINGS	1	LS
8692000000–N	SP	FOAM JOINT SEALS	1	LS
8867000000–E	SP	2–BAR METAL RAIL (LF)	150.6	LF
6070000000–N	1639	SPECIAL STILLING BASINS	2	

5/28/99
IB4147 AW
7/3/2013 10:01:21 B-3457\Roadway\Proj\B3457_Rdy_sum.dgn

12/06/07

COMPUTED BY: SLK	DATE: 4/11
CHECKED BY: BAM	DATE: 7/16/12

STATE OF NORTH CAROLINA
DIVISION OF HIGHWAYS

PROJECT REFERENCE NO.	SHEET NO.
B-3457	3-A

SUMMARY OF EARTHWORK

STATION	STATION	UNCL. EXCAV.	EMBANK. +%	BORROW	WASTE
-L- 10+40.00	-L- 11+92.00	24	90	66	
SUBTOTALS:		24	90	66	
-L- 12+82.00	-L- 14+55.00	40	90	50	
SUBTOTALS:		40	90	50	
PROJECT TOTALS:		64	184	116	
LOSS DUE TO CLEARING AND GRUBBING		-10			
GRAND TOTALS:		54		120	
SAY		100		150	

Earthwork quantities are calculated by the Roadway Design Unit. These earthwork quantities are based in part on subsurface data provided by the Geotechnical Engineering Unit.

NOTE: APPROXIMATE QUANTITIES ONLY. UNCLASSIFIED EXCAVATION, BORROW EXCAVATION, SHOULDER BORROW, FINE GRADING, CLEARING & GRUBBING, BREAKING OF EXISTING PAVEMENT, AND REMOVAL OF EXISTING PAVEMENT WILL TO BE PAID FOR AT THE CONTRACT LUMP SUM PRICE FOR "GRADING".

SHOULDER BERM GUTTER SUMMARY

SURVEY LINE	STATION	STATION	LENGTH
-L- LT	12+94.45	13+05.80	11.35
		TOTAL:	11.35
		SAY:	12

LIST OF PIPES, ENDWALLS, ETC. (FOR PIPES 48" & UNDER)

STATION / SIZE / THICKNESS OR GAUGE	LOCATION (LT,RT, OR CL)	STRUCTURE NO. FROM	STRUCTURE NO. TO	TOP ELEVATION	INVERT ELEVATION	INVERT ELEVATION	SLOPE CRITICAL
13+19.28	LT	1					
11+06.00	CL	2			1889.8	1888.3	
PROJECT SUBTOTAL							

STATION	DRAINAGE PIPE (RCP, CSP, CAAP, HDPE or PVC) 12"	15"	18"	24"	30"	36"	42"	48"	DO NOT USE RCP	DO NOT USE CSP	DO NOT USE CAAP	DO NOT USE HDPE
13+19.28												
11+06.00												
PROJECT SUBTOTAL												

STATION	C. S. PIPE 12" .064	15" .064	18" .064	24" .064	30" .079	36" .079	42" .109	48" .109
13+19.28								
11+06.00				32				
PROJECT SUBTOTAL				32				

STATION	R. C. PIPE CLASS III 12"	15"	18"	24"	30"	36"	42"	48"	R. C. PIPE CLASS IV 12"	15"	18"	24"	30"	36"	42"	48"
13+19.28																
11+06.00																
PROJECT SUBTOTAL																

STATION	*** RC PIPE, (CLASS V)	**** RC PIPE CULVERTS, CONTRACTOR DESIGN	**** RC PIPE CULVERTS, CONTRACTOR DESIGN	15" SIDE DRAIN PIPE	18" SIDE DRAIN PIPE	ENDWALLS STD. 838.01, STD. 838.11 OR STD. 838.80 (UNLESS NOTED OTHERWISE) CU. YDS. R.C.P.	C.S.P.	QUANTITIES FOR DRAINAGE STRUCTURES PER EACH (0' THRU 5.0')	LIN. *FT. A 5.0' THRU 10.0'	B 10.0' AND ABOVE	C.B. STD. 840.01 OR STD. 840.02
13+19.28											
11+06.00							1.4				
PROJECT SUBTOTAL							1.4				

* TOTAL L.F. FOR PAY QUANTITY SHALL BE COL. 'A' + (1.3 X COL.'B')

STATION	FRAME, GRATES AND HOOD STANDARD 840.03 TYPE OF GRATE E	F	G			T.B.D.I. STD. 840.35			G.D.I. (N.S.) FRAME WITH GRATE STD. 840.29	MODIFIED CONCRETE FLUME	CORR. STEEL ELBOWS NO. & SIZE	CONC. COLLARS CL. "B" C.Y. STD 840.72	CONC. & BRICK PIPE PLUG, C.Y. STD. 840.71	PIPE REMOVAL LIN.FT.	REMARKS
13+19.28										1					SEE SHEET 2 FOR DETAIL
11+06.00														32	
PROJECT SUBTOTAL										1				32	

ABBREVIATIONS

- C.B. CATCH BASIN
- N.D.I. NARROW DROP INLET
- D.I. DROP INLET
- G.D.I. GRATED DROP INLET
- G.D.I. (N.S.) GRATED DROP INLET (NARROW SLOT)
- J.B. JUNCTION BOX
- M.H. MANHOLE
- T.B.D.I. TRAFFIC BEARING DROP INLET
- T.B.J.B. TRAFFIC BEARING JUNCTION BOX

"N" = DISTANCE FROM EDGE OF LANE TO FACE OF GUARDRAIL.
TOTAL SHOULDER WIDTH = DISTANCE FROM EDGE OF TRAVEL LANE TO SHOULDER BREAK POINT.
FLARE LENGTH = DISTANCE FROM LAST SECTION OF PARALLEL GUARDRAIL TO END OF GUARDRAIL.
W = TOTAL WIDTH OF FLARE FROM BEGINNING OF TAPER TO END OF GUARDRAIL.
G = GATING IMPACT ATTENUATOR TYPE 350
NG = NON-GATING IMPACT ATTENUATOR TYPE 350

GUARDRAIL SUMMARY

SURVEY LINE	BEG. STA.	END STA.	LOCATION	LENGTH STRAIGHT	LENGTH SHOP CURVED	LENGTH DOUBLE FACED	WARRANT POINT APPROACH END	WARRANT POINT TRAILING END	"N" DIST. FROM E.O.L.	TOTAL SHOUL. WIDTH	FLARE LENGTH APPROACH END	FLARE LENGTH TRAILING END	W APPROACH END	W TRAILING END
-L-	11+24.83	11+82.70	RT	57.87			11+82.70		2.00	5.00	25.00		1	
-L-	11+50.83	12+04.14	LT	53.31				12+04.14	4.00	7.00		25.00		1
-L-	12+72.72	12+82.72	RT		25.00			12+72.72	2.00	5.00				1
-L-	12+94.15	13+49.56	LT	55.41			12+94.15		4.00	7.00	25.00		1	
			PROJECT SUBTOTAL	166.59	25.00									
			LESS ANCHORS	(-) 131.25	(-) 25.00									
			PROJECT TOTAL	35.34	0									
			SAY	37.50	0		ADDITIONAL GUARDRAIL POSTS = 5 EA.							

SURVEY LINE	BEG. STA.	ANCHORS XI MOD	XI	GRAU 350 TL-2	TYPE III	TYPE III SHOP CURVE	CAT-1	VI MOD	BIC	AT-1	IMPACT ATTENUATOR TYPE 350 EA	G	NG	SINGLE FACED GUARDRAIL	REMOVE EXISTING GUARDRAIL	REMOVE AND STOCKPILE EXISTING GUARDRAIL	REMARKS
-L-	11+24.83			1		1											
-L-	11+50.83			1	1												
-L-	12+72.72					1				1							
-L-	12+94.15			1		1											
	PROJECT SUBTOTAL			3	1	3	ANCHOR DEDUCTIONS			1							
								TYPE III = 4 @ 18.75 =		75.00							
						GRAU 350 TL-2 = 3 @ 25.00 =				75.00							
								AT-1 = 1 @ 6.25 =		6.25							
									=	156.25							

$$$$$$$$SYSTIME$$$$$ $$$$$$$$USERNAME$$$$$ $$$$$$$$$$$$$DGN$$$$$$$$$$$$$$$$$$$$$$

PROJECT REFERENCE NO.	SHEET NO.
B-3457	4
R/W SHEET NO.	

ROADWAY DESIGN ENGINEER: NORTH CAROLINA PROFESSIONAL ENGINEER SEAL 21116 — BOB A. MAY — 1/4/13

HYDRAULICS ENGINEER: NORTH CAROLINA PROFESSIONAL ENGINEER SEAL 023603 — MAX S. PRINCE — 1/4/13

WETHERILL ENGINEERING
559 Jones Franklin Rd. Suite 154
Raleigh, N.C. 27606
License No. F-0377
Bus: 919 851 8077
Fax: 919 851 8107
TRANSPORTATION PLANNING/DESIGN - BRIDGE/STRUCTURE DESIGN
CAD/SITE DESIGN - GIS/GPS - CONSTRUCTION OBSERVATION

8/17/99

REVISIONS

DATUM DESCRIPTION

THE LOCALIZED COORDINATE SYSTEM DEVELOPED FOR THIS PROJECT IS BASED ON THE STATE PLANE COORDINATES ESTABLISHED BY NGS FOR MONUMENT "B-3457 GPS-101"
WITH NAD 83/NSRS 2007 STATE PLANE GRID COORDINATES OF
NORTHING: 624298.395(ft) EASTING: 620386.676(ft)
ELEVATION: 1841.33(ft)
THE AVERAGE COMBINED GRID FACTOR USED ON THIS PROJECT (GROUND TO GRID) IS: 0.99973134
THE N.C. LAMBERT GRID BEARING AND LOCALIZED HORIZONTAL GROUND DISTANCE FROM "B-3457 GPS-101" TO -L- STATION 10+00.00 IS
S 12° 34' 04.8" E 2,330.46'
ALL LINEAR DIMENSIONS ARE LOCALIZED HORIZONTAL DISTANCES
VERTICAL DATUM USED IS NAVD 88

-L-		
PI Sta 11+41.77	PI Sta 13+21.52	PI Sta 14+19.16
Δ = 33° 40' 10.3" (RT)	Δ = 12° 12' 09.8" (LT)	Δ = 16° 53' 11.7" (RT)
D = 39° 30' 51.6"	D = 22° 02' 12.6"	D = 12° 08' 20.2"
L = 85.21'	L = 55.37'	L = 139.11'
T = 43.87'	T = 27.79'	T = 70.06'
R = 145.00'	R = 260.00'	R = 472.00'
SE = 0.02 FT/FT	SE = 0.02 FT/FT	SE = 0.03 FT/FT
RO = SEE PLANS	RO = SEE PLANS	RO = SEE PLANS

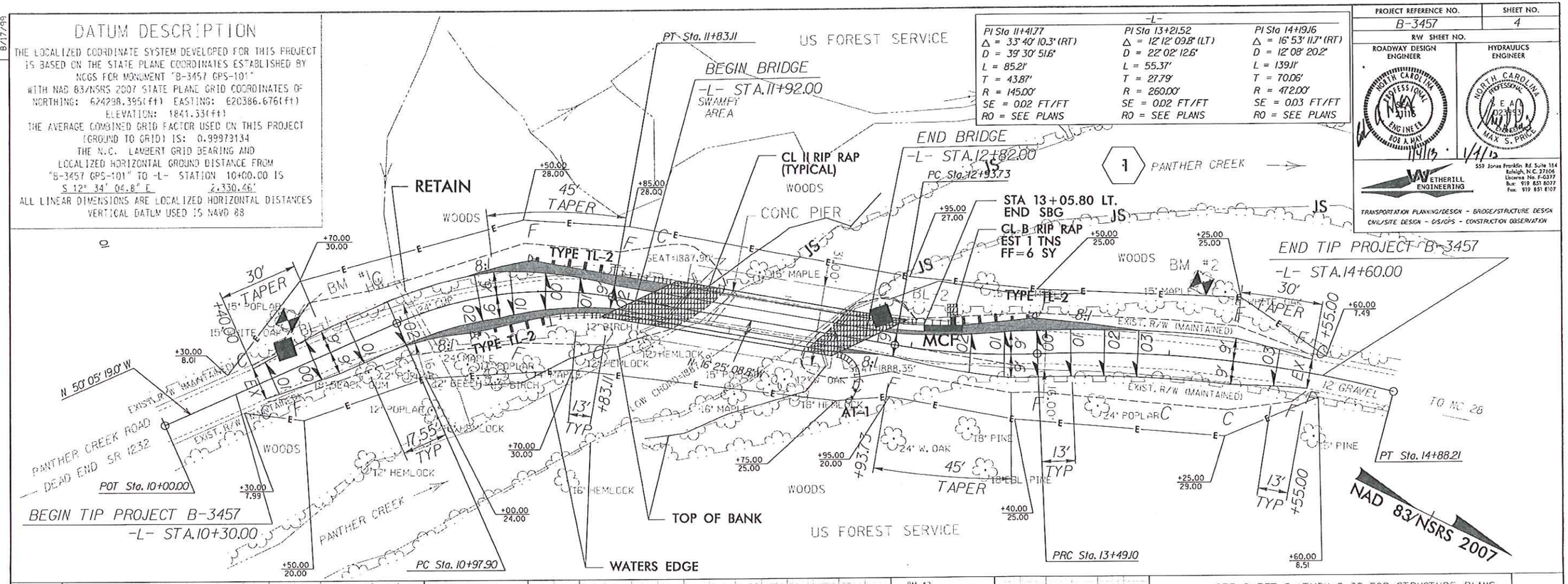

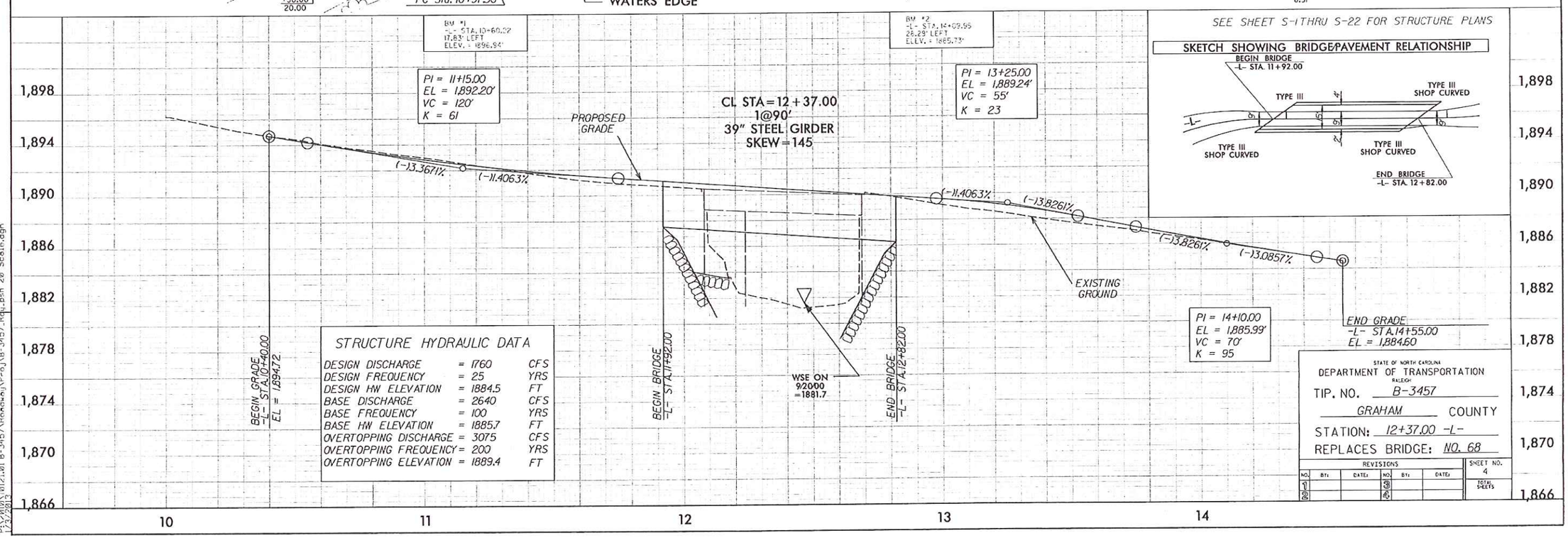

SEE SHEET S-1 THRU S-22 FOR STRUCTURE PLANS

SKETCH SHOWING BRIDGE/PAVEMENT RELATIONSHIP

STRUCTURE HYDRAULIC DATA

DESIGN DISCHARGE	= 1760	CFS
DESIGN FREQUENCY	= 25	YRS
DESIGN HW ELEVATION	= 1884.5	FT
BASE DISCHARGE	= 2640	CFS
BASE FREQUENCY	= 100	YRS
BASE HW ELEVATION	= 1885.7	FT
OVERTOPPING DISCHARGE	= 3075	CFS
OVERTOPPING FREQUENCY	= 200	YRS
OVERTOPPING ELEVATION	= 1889.4	FT

STATE OF NORTH CAROLINA
DEPARTMENT OF TRANSPORTATION
RALEIGH

TIP. NO. B-3457
GRAHAM COUNTY
STATION: 12+37.00 -L-
REPLACES BRIDGE: NO. 68

REVISIONS						SHEET NO.
NO.	BY:	DATE:	NO.	BY:	DATE:	4
1			3			TOTAL SHEETS
2			4			

11:52:19 AM
1/4/2013
12/12/2012
J:\Roadway\Proj\B-3457_Rdy.psh 20 Scale.dgn

PROJ. REFERENCE NO.	SHEET NO.
B-3457	TCP-1

TRAFFIC CONTROL PLAN

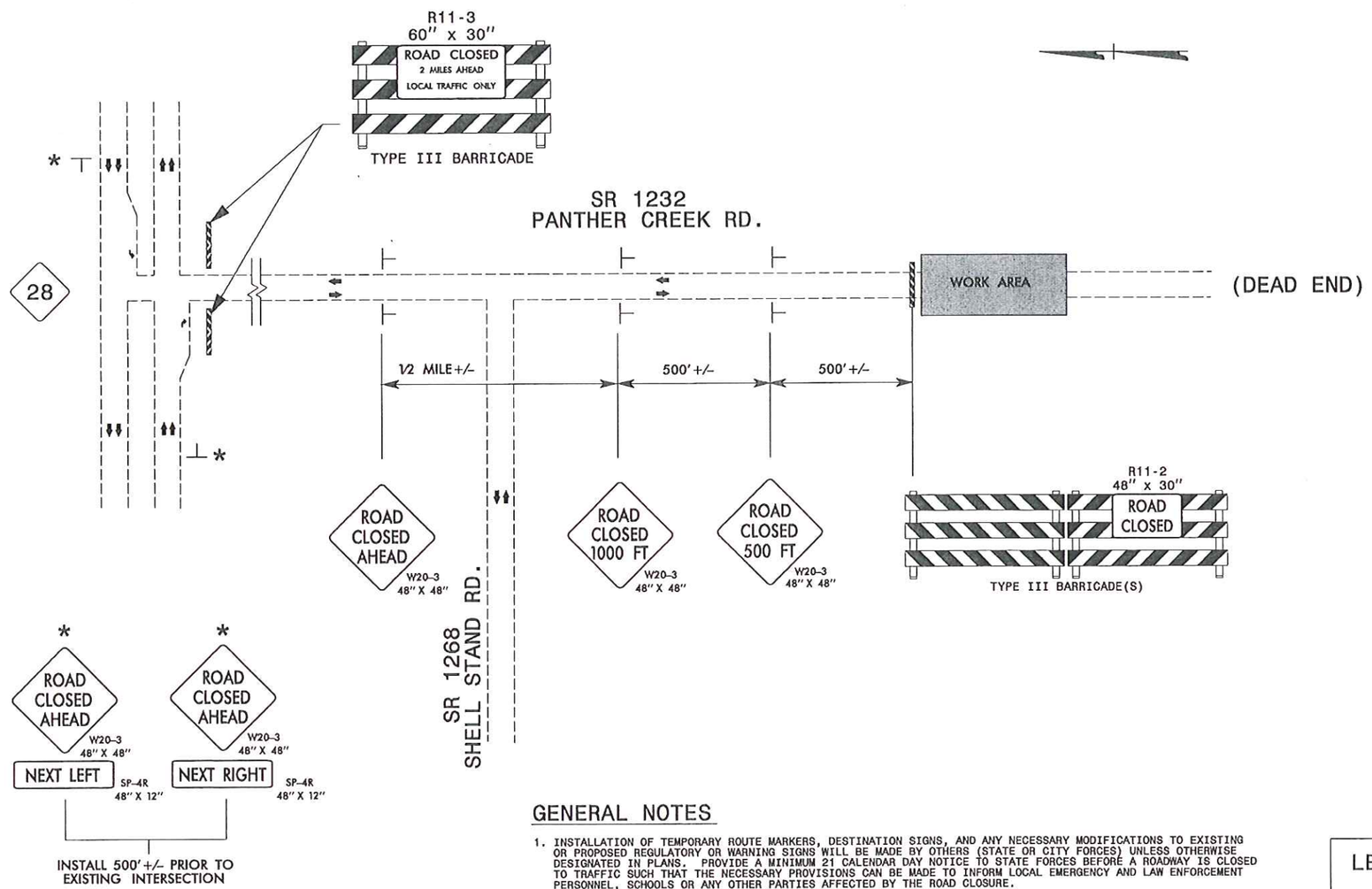

GENERAL NOTES

1. INSTALLATION OF TEMPORARY ROUTE MARKERS, DESTINATION SIGNS, AND ANY NECESSARY MODIFICATIONS TO EXISTING OR PROPOSED REGULATORY OR WARNING SIGNS WILL BE MADE BY OTHERS (STATE OR CITY FORCES) UNLESS OTHERWISE DESIGNATED IN PLANS. PROVIDE A MINIMUM 21 CALENDAR DAY NOTICE TO STATE FORCES BEFORE A ROADWAY IS CLOSED TO TRAFFIC SUCH THAT THE NECESSARY PROVISIONS CAN BE MADE TO INFORM LOCAL EMERGENCY AND LAW ENFORCEMENT PERSONNEL, SCHOOLS OR ANY OTHER PARTIES AFFECTED BY THE ROAD CLOSURE.
2. INSTALL SIGNS BEFORE THE BARRICADES WHEN CLOSING THE ROADWAY TO TRAFFIC. REMOVE BARRICADES BEFORE SIGNS WHEN OPENING THE ROADWAY TO TRAFFIC. INSTALL/REMOVE SIGNS AND BARRICADES WITHIN THE SAME CALENDAR DAY.
3. POSITION WING BARRICADES ON THE SHOULDERS AND SLOPE THE STRIPES DOWNWARD IN THE DIRECTION TOWARD WHICH TRAFFIC MUST TURN IN DETOURING.
4. USE ADDITIONAL TYPE III BARRICADES IN STAGGERED LOCATIONS SUPPLEMENTED WITH SIGN R11-4 "ROAD CLOSED TO THRU TRAFFIC" IN THE EVENT THAT TRAFFIC MUST BE MAINTAINED BEYOND THE DETOUR POINT.
5. SEE STANDARD SPECIFICATION 1089-1 FOR WORK ZONE SIGNS.
6. SEE STANDARD SPECIFICATION 1089-2 FOR WORK ZONE SIGN SUPPORTS.

LEGEND

- DIRECTION OF TRAFFIC FLOW
- BARRICADE (TYPE III)
- STATIONARY MOUNTED SIGN

ROADWAY STANDARD DRAWINGS

THE FOLLOWING ROADWAY STANDARDS AS SHOWN IN "ROADWAY STANDARD DRAWINGS" - PROJECT SERVICES UNIT - N.C. DEPARTMENT OF TRANSPORTATION - RALEIGH, N.C., DATED JANUARY 2012 ARE APPLICABLE TO THIS PROJECT AND BY REFERENCE HEREBY ARE CONSIDERED A PART OF THESE PLANS:

STD. NO.	TITLE
1101.03	TEMPORARY ROAD CLOSURES
1101.04	TEMPORARY SHOULDER CLOSURES
1110.01	STATIONARY WORK ZONE SIGNS
1110.02	PORTABLE WORK ZONE SIGNS
1135.01	CONES
1145.01	BARRICADES
1205.12	PAVEMENT MARKINGS BRIDGES
904.10	ORIENTATION OF GROUND MOUNTED SIGNS

WETHERILL ENGINEERING
559 Jones Franklin Rd. Suite 164
Raleigh, N.C. 27606
License No. F-0377
Bus: 919 851 8077
Fax: 919 851 8107
TRANSPORTATION PLANNING/DESIGN - BRIDGE/STRUCTURE DESIGN
CIVIL/SITE DESIGN - GIS/GPS - CONSTRUCTION OBSERVATION

APPROVED: DATE: 1/4/13

SEAL

NORTH CAROLINA PROFESSIONAL SEAL 21116 ENGINEER BOB A. MAY

DIVISION OF HIGHWAYS STATE OF NORTH CAROLINA DEPARTMENT OF TRANSPORTATION WORK ZONE TRAFFIC CONTROL

ROAD CLOSURE FOR PANTHER CREEK ROAD (SR 1232)

12/31/2012
4:04:20 PM
R:\2200\1012\01\B-3457\Traffic\b-3457_TCP_BTCP.dgn

EROSION CONTROL PLANS

ROADSIDE ENVIRONMENTAL UNIT
DEPARTMENT OF TRANSPORTATION
DIVISION OF HIGHWAYS
RALEIGH, N.C.

2012 STANDARD SPECIFICATIONS

Place Matting for Erosion Control on Slope as Work Allows.

QUANTITIES:

Temporary Silt Fence	887 LF
Special Sediment Control Fence	135 LF
Erosion Control Stone, CL A	35 TN
Erosion Control Stone, CL B	6 TN
Sediment Control Stone, #57	55 TN
Matting for Erosion Control	210 SY

2012 STANDARD DRAWINGS

1604.01	Railroad Erosion Control Detail	1632.01	Rock Inlet Sediment Trap Type A
1605.01	Temporary Silt Fence	1632.02	Rock Inlet Sediment Trap Type B
1606.01	Special Sediment Control Fence	1632.03	Rock Inlet Sediment Trap Type C
1607.01	Gravel Construction Entrance	1633.01	Temporary Rock Silt Check Type A
1622.01	Temporary Berms and Slope Drains	1633.02	Temporary Rock Silt Check Type B
1630.01	Riser Basin	1634.01	Temporary Rock Sediment Dam Type A
1630.02	Silt Basin Type B	1634.02	Temporary Rock Sediment Dam Type B
1630.03	Temporary Silt Ditch	1635.01	Rock Pipe Inlet Sediment Trap Type A
1630.04	Stilling Basin	1635.02	Rock Pipe Inlet Sediment Trap Type B
1630.05	Temporary Diversion	1640.01	Coir Fiber Baffle
1630.06	Special Stilling Basin	1645.01	Temporary Stream Crossing
1631.01	Matting Installation		

PROJECT REFERENCE NO.	SHEET NO.
B-3457	EC-1 (CONST. 4)
R/W SHEET NO.	

MAX PRICE, PE
LEVEL IIIA NAME

3133
LEVEL IIIA CERTIFICATION NO.

WETHERILL ENGINEERING
559 Jones Franklin Rd. Suite 164
Raleigh, N.C. 27606
Liscense No. F-0377
Bus: 919 851 8077
Fax: 919 851 8107
TRANSPORTATION PLANNING/DESIGN - BRIDGE/STRUCTURE DESIGN
CIVIL/SITE DESIGN - GIS/GPS - CONSTRUCTION OBSERVATION

NAD 83/NSRS 2007

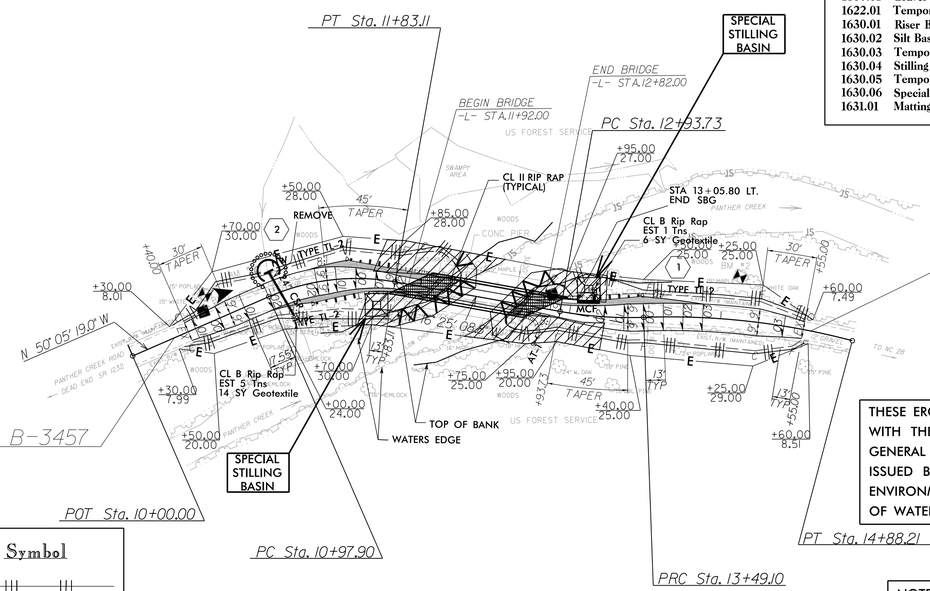

THESE EROSION AND SEDIMENT CONTROL PLANS COMPLY WITH THE REGULATIONS SET FORTH BY THE NCG-010000 GENERAL CONSTRUCTION PERMIT EFFECTIVE AUGUST 3, 2011 ISSUED BY THE NORTH CAROLINA DEPARTMENT OF ENVIRONMENT AND NATURAL RESOURCES DIVISION OF WATER QUALITY.

NOTES: ANY DEVIATION FROM OPTIONS GIVEN WILL REQUIRE PRIOR APPROVAL BY ENGINEER.

ADDITIONAL EROSION CONTROL DEVICES MAY NEED TO BE INSTALLED AS DIRECTED BY THE ENGINEER.

CONSTRUCTION SEQUENCE

1. ACCESS AND MOBILIZATION: STABILIZE BARE AREAS IMMEDIATELY WITH TEMPORARY VEGETATION AND/OR GRAVEL AS CONSTRUCTION TAKES PLACE.
2. INSTALL SILT FENCE, SPECIAL STILLING BASIN AND SPECIAL SEDIMENT CONTROL FENCE. SILT FENCE SHALL BE INSTALLED UP TO THE EXISTING BRIDGE ABUTMENTS TO PREVENT SEDIMENT-LADEN RUNOFF FROM LEAVING THE CONSTRUCTION SITE. SILT FENCE SHALL BE INSTALLED AT THE PERIMETER OF DISTURBED AREAS.
3. PROCEED WITH CONSTRUCTION OF THE NEW BRIDGE. ADDITIONAL GRAVEL STABILIZATION OR SILT FENCE MAY BE REQUIRED BEHIND THE OLD ABUTMENTS WHEN THE OLD BRIDGE IS REMOVED AND BEFORE THE NEW BRIDGE IS INSTALLED.
4. MAINTENANCE INSPECTIONS SHALL BE PERFORMED WEEKLY AND AFTER PERIODS OF RAINFALL. REPAIRS SHALL BE MADE IMMEDIATELY.
5. ONCE THE SITE IS STABILIZED, REMOVE ALL EROSION CONTROL DEVICES.

Std. #	Description	Symbol
1605.01	Temporary Silt Fence	
1606.01	Special Sediment Control Fence	
1633.02	Temporary Rock Silt Check Type-B	
1635.02	Rock Pipe Inlet Sediment Trap Type-B	

Environmentally Sensitive Area (ESA)

BM #1
-L- STA. 10+60.22
17.83' LEFT
ELEV. = 1896.94'

BM #2
-L- STA. 14+09.95
28.29' LEFT
ELEV. = 1885.73'

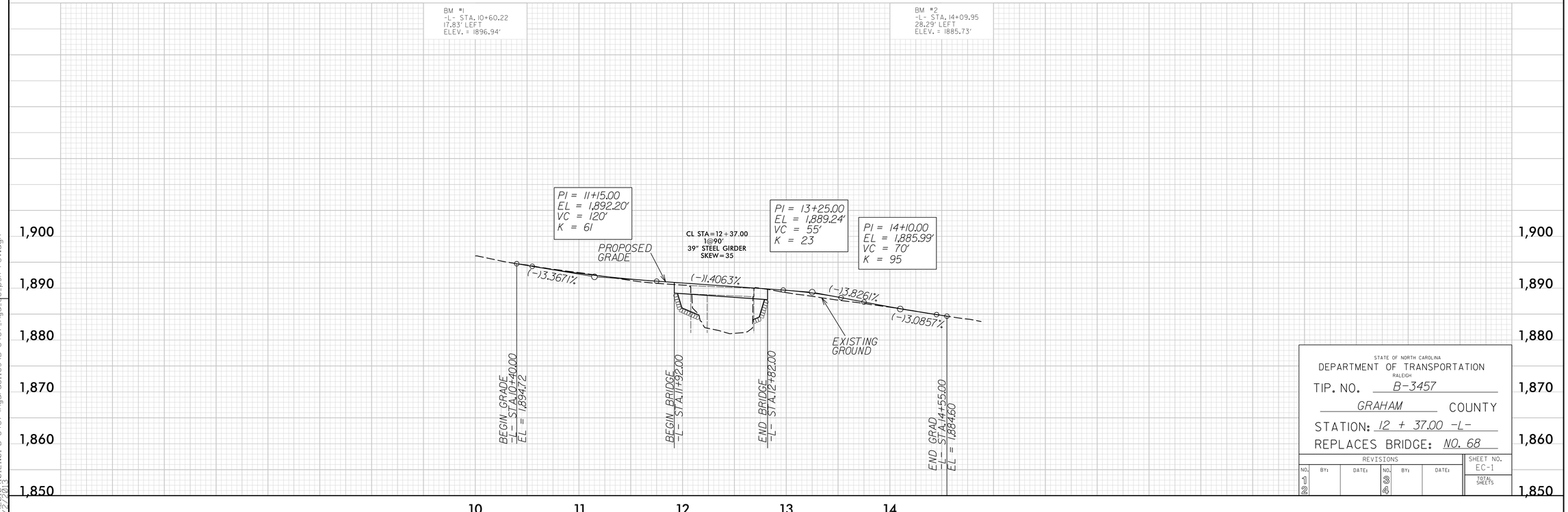

STATE OF NORTH CAROLINA
DEPARTMENT OF TRANSPORTATION
RALEIGH

TIP. NO. B-3457
GRAHAM COUNTY
STATION: 12 + 37.00 -L-
REPLACES BRIDGE: NO. 68

REVISIONS						SHEET NO.
NO.	BY:	DATE:	NO.	BY:	DATE:	EC-1
1			3			TOTAL SHEETS
2			4			

REVISIONS

8/17/99

10

3:15:57 PM
7/9/2013
S:\2010\10121.01 B-3457\Hydraulics\B-3457_Hyd_ec_psh_rev.dgn

PROJECT REFERENCE NO.	SHEET NO.
B-3457	EC-2

ROADWAY DESIGN ENGINEER	HYDRAULICS ENGINEER
MAX PRICE, PE	
LEVEL IIIA NAME	
3133	
LEVEL IIIA CERTIFICATION NO.	

DIVISION OF HIGHWAYS
STATE OF NORTH CAROLINA

SOIL STABILIZATION SUMMARY SHEET

MATTING FOR EROSION CONTROL

CONST SHEET NO.	LINE	FROM STATION	TO STATION	SIDE	ESTIMATE (SY)
4	L	10+70	11+50	LT	34
4	L	12+93	13+50	LT	14
4	L	10+70	11+84	RT	50
4	L	12+93	14+00	RT	67
				SUBTOTAL	165
MISCELLANEOUS MATTING TO BE INSTALLED AS DIRECTED BY THE ENGINEER					700
				TOTAL	865
				SAY	880

MATTING FOR EROSION CONTROL

CONST SHEET NO.	LINE	FROM STATION	TO STATION	SIDE	ESTIMATE (SY)

PROJECT REFERENCE NO.	SHEET NO.
B-3457	EC-3

ROADWAY DESIGN ENGINEER	HYDRAULICS ENGINEER
MAX PRICE, PE LEVEL IIIA NAME 3133 LEVEL IIIA CERTIFICATION NO.	

DIVISION OF HIGHWAYS
STATE OF NORTH CAROLINA

SOIL STABILIZATION TIMEFRAMES

SITE DESCRIPTION	STABILIZATION TIME	TIMEFRAME EXCEPTIONS
PERIMETER DIKES, SWALES, DITCHES AND SLOPES	7 DAYS	NONE
HIGH QUALITY WATER (HQW) ZONES	7 DAYS	NONE
SLOPES STEEPER THAN 3:1	7 DAYS	IF SLOPES ARE 10' OR LESS IN LENGTH AND ARE NOT STEEPER THAN 2:1, 14 DAYS ARE ALLOWED.
SLOPES 3:1 OR FLATTER	14 DAYS	7 DAYS FOR SLOPES GREATER THAN 50' IN LENGTH.
ALL OTHER AREAS WITH SLOPES FLATTER THAN 4:1	14 DAYS	NONE, EXCEPT FOR PERIMETERS AND HQW ZONES.

STATE	STATE PROJECT REFERENCE NO.	SHEET NO.	TOTAL SHEETS
N.C.	B-3457	RF-1	
STATE PROJ. NO.	F. A. PROJ. NO.	DESCRIPTION	

PLANTING DETAILS

SEEDLING / LINER BAREROOT PLANTING DETAIL

HEALING IN

1. Locate a healing-in site in a shady, well protected area.
2. Excavate a flat bottom trench 12 inches deep and provide drainage.

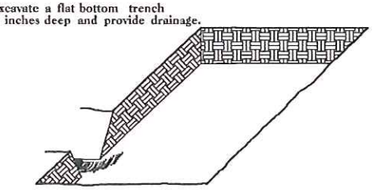

3. Backfill the trench with 2 inches well rotted sawdust. Place a 2 inch layer of well rotted sawdust at a sloping angle at one end of the trench.

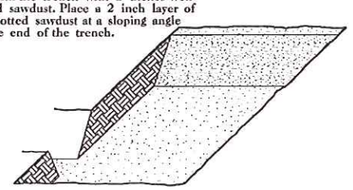

4. Place a single layer of plants against the sloping end so that the root collar is at ground level.

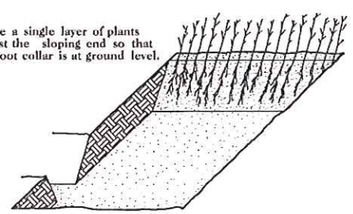

5. Place a 2 inch layer of well rotted sawdust over the roots maintaining a sloping angle.

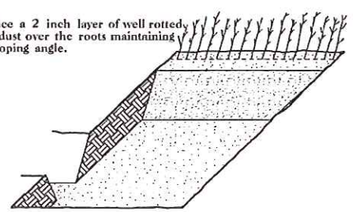

6. Repeat layers of plants and sawdust as necessary and water thoroughly.

DIBBLE PLANTING METHOD
USING THE KBC PLANTING BAR

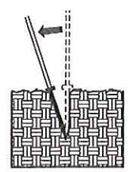

1. Insert planting bar as shown and pull handle toward planter.

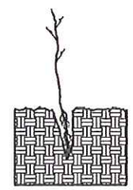

2. Remove planting bar and place seedling at correct depth.

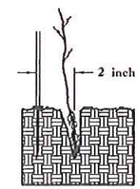

3. Insert planting bar 2 inches toward planter from seedling.

4. Pull handle of bar toward planter, firming soil at bottom.

5. Push handle forward firming soil at top.

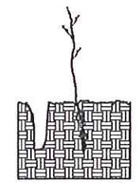

6. Leave compaction hole open. Water thoroughly.

PLANTING NOTES:

PLANTING BAG
During planting, seedlings shall be kept in a moist canvas bag or similar container to prevent the root systems from drying.

KBC PLANTING BAR
Planting bar shall have a blade with a triangular cross section, and shall be 12 inches long, 4 inches wide and 1 inch thick at center.

ROOT PRUNING
All seedlings shall be root pruned, if necessary, so that no roots extend more than 10 inches below the root collar.

REFORESTATION

☐ TREE REFORESTATION SHALL BE PLANTED 6 FT. TO 10 FT. ON CENTER, RANDOM SPACING, AVERAGING 8 FT. ON CENTER, APPROXIMATELY 680 PLANTS PER ACRE.

REFORESTATION

MIXTURE, TYPE, SIZE, AND FURNISH SHALL CONFORM TO THE FOLLOWING:

25%	LIRIODENDRON TULIPIFERA	TULIP POPLAR	12 in - 18 in BR
25%	PLATANUS OCCIDENTALIS	SYCAMORE	12 in - 18 in BR
25%	FRAXINUS PENNSYLVANICA	GREEN ASH	12 in - 18 in BR
25%	BETULA NIGRA	RIVER BIRCH	12 in - 18 in BR

REFORESTATION DETAIL SHEET

N.C.D.O.T. - ROADSIDE ENVIRONMENTAL UNIT

PROJ. REFERENCE NO.	SHEET NO.
B-3457	X-1

STATE OF NORTH CAROLINA
DIVISION OF HIGHWAYS

CROSS-SECTION SUMMARY

NOTE: EMBANKMENT COLUMN DOES NOT INCLUDE BACKFILL FOR UNDERCUT

Station L	Uncl. Exc. (cu. yd.)	Embt (cu. yd.)
10+40.00	0	0
10+50.00	4	0
10+70.00	11	1
10+97.90	9	5
11+50.00	0	42
11+83.11	0	30
12+93.73	0	50
13+00.00	0	2
13+49.10	3	12
14+00.00	14	11
14+50.00	21	3
14+55.00	2	0

Approximate quantities only. Unclassified excavation, borrow excavation, shoulder borrow, fine grading, clearing and grubbing, breaking of existing pavement and removal of existing pavement will be paid for at the lump sum price for "Grading".

8/23/99

0 5 10	PROJ. REFERENCE NO.	SHEET NO.
	B-3457	X-2

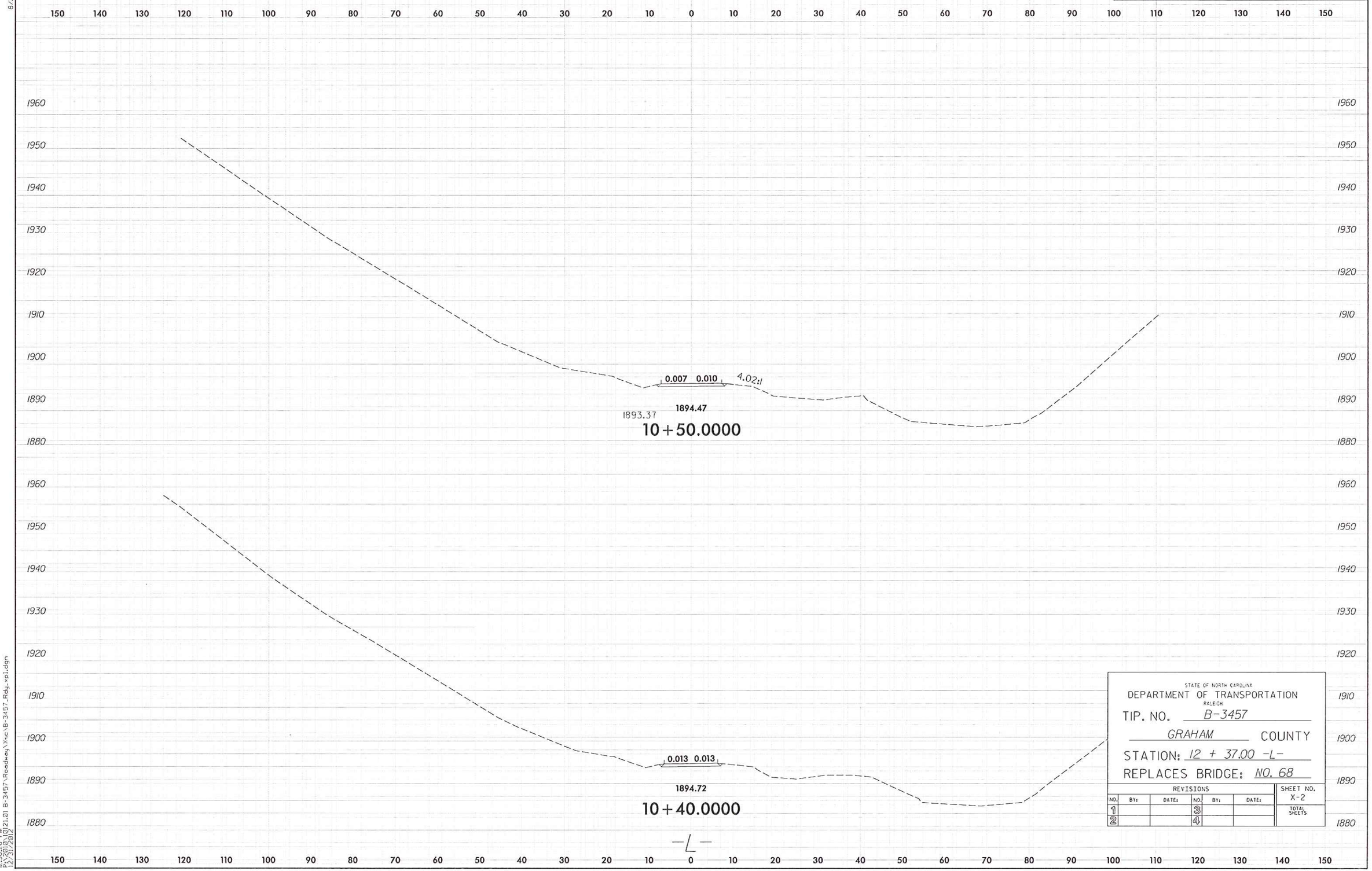

STATE OF NORTH CAROLINA
DEPARTMENT OF TRANSPORTATION
RALEIGH

TIP. NO. B-3457

GRAHAM COUNTY

STATION: 12 + 37.00 -L-

REPLACES BRIDGE: NO. 68

REVISIONS						SHEET NO.
NO.	BY:	DATE:	NO.	BY:	DATE:	X-2
1			3			TOTAL SHEETS
2			4			

P:\50-26_PM
12/21/2012 10:21:01 B-3457\Roadway\Xsc\B-3457_Rdy_xp1.dgn

8/23/99

0 5 10	PROJ. REFERENCE NO.	SHEET NO.
	B-3457	X-3

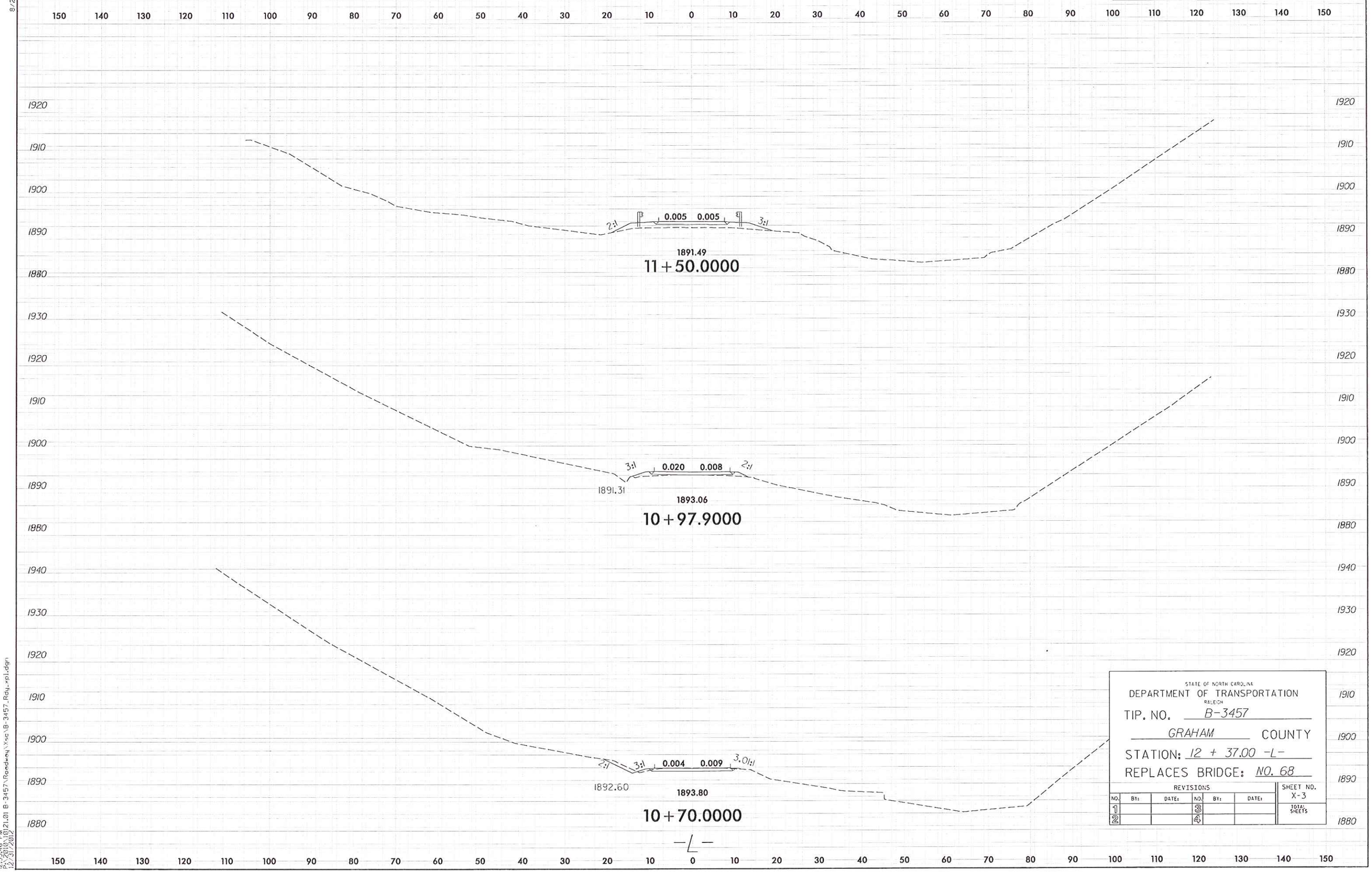

STATE OF NORTH CAROLINA
DEPARTMENT OF TRANSPORTATION
RALEIGH

TIP. NO. B-3457

GRAHAM COUNTY

STATION: 12 + 37.00 -L-

REPLACES BRIDGE: NO. 68

REVISIONS						SHEET NO.
NO.	BY:	DATE:	NO.	BY:	DATE:	X-3
1			3			TOTAL SHEETS
2			4			

12:53:46 PM
P:\2010\10121.01 B-3457\Roadway\Xsec\B-3457_Rdy_rpl.dgn
12/31/2012

8/23/99

0 5 10	PROJ. REFERENCE NO.	SHEET NO.
	B-3457	X-4

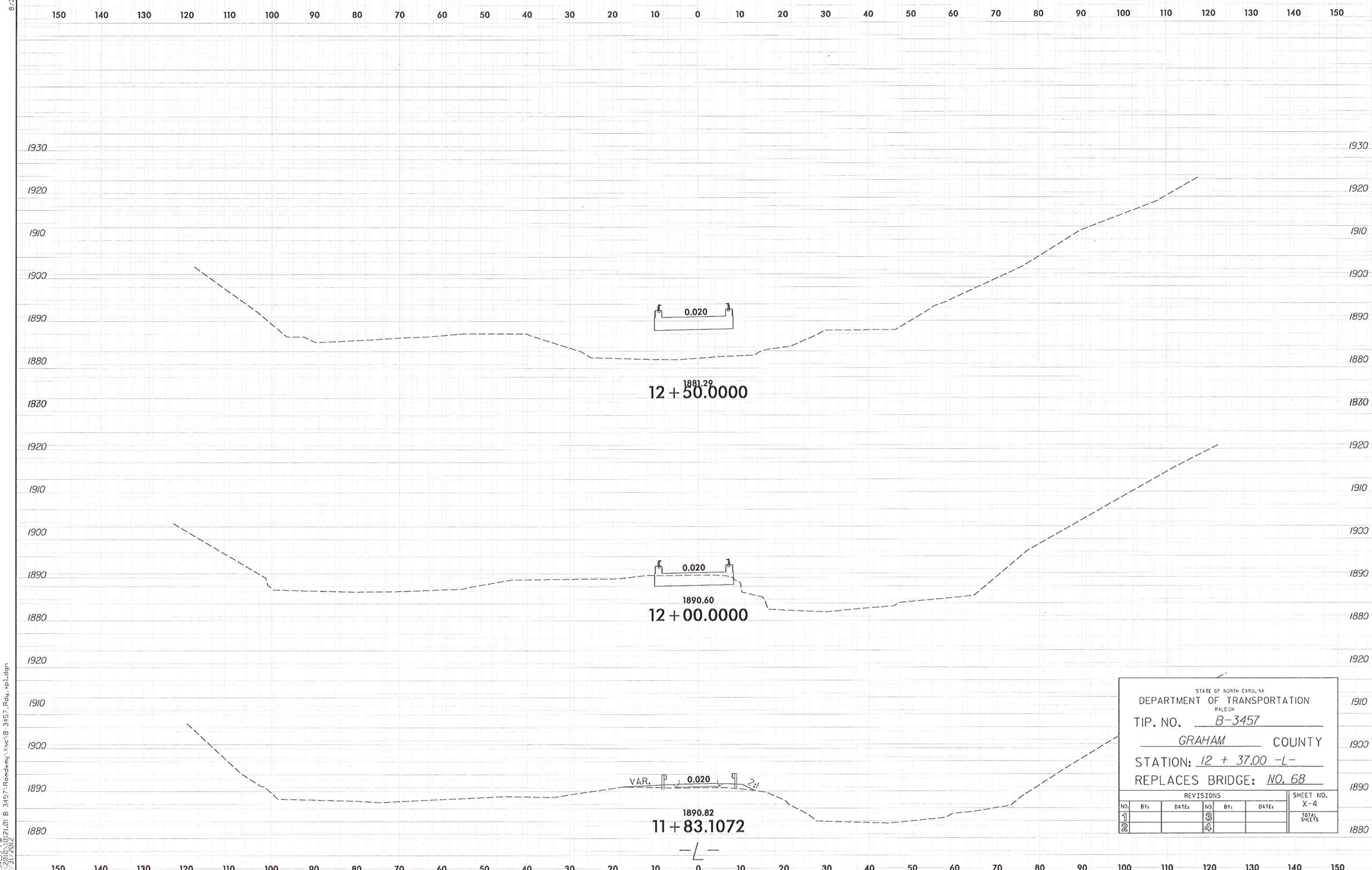

STATE OF NORTH CAROLINA
DEPARTMENT OF TRANSPORTATION
RALEIGH

TIP. NO. B-3457

GRAHAM COUNTY

STATION: 12 + 37.00 -L-

REPLACES BRIDGE: NO. 68

REVISIONS						SHEET NO. X-4
NO.	BY:	DATE:	NO.	BY:	DATE:	TOTAL SHEETS
1			3			
2			4			

12:54:37 PM
P:\2012\01\21.01 B-3457\Roadway\Xsec\B-3457_Rdy_xpl.dgn
12/31/2012

8/23/99

0 5 10	PROJ. REFERENCE NO.	SHEET NO.
	B-3457	X-5

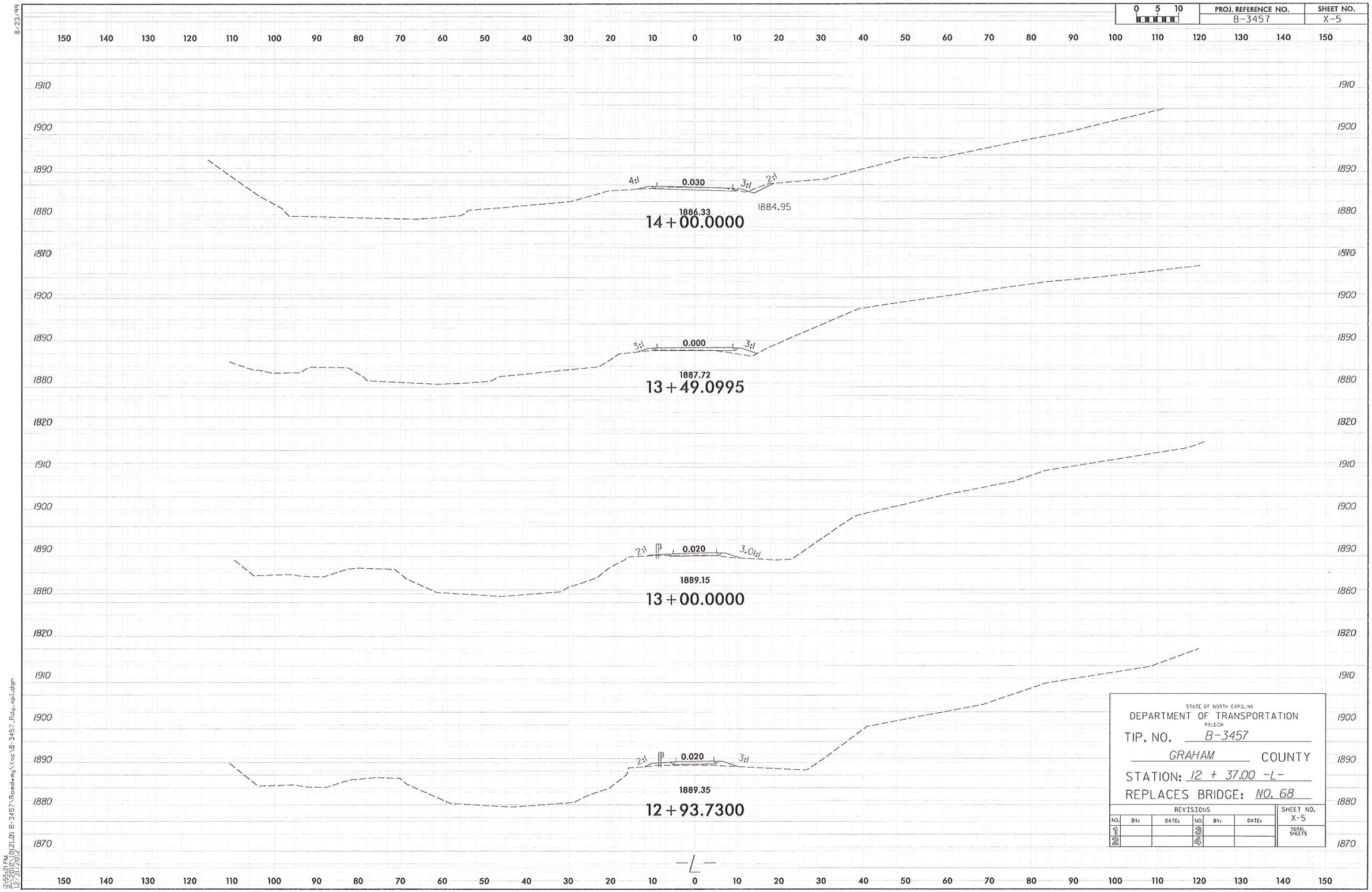

STATE OF NORTH CAROLINA
DEPARTMENT OF TRANSPORTATION
RALEIGH

TIP. NO. B-3457

GRAHAM COUNTY

STATION: 12 + 37.00 -L-

REPLACES BRIDGE: NO. 68

REVISIONS						SHEET NO. X-5
NO.	BY:	DATE:	NO.	BY:	DATE:	TOTAL SHEETS
1			3			
2			4			

12:55:21 PM
12/31/2012
R:\Roadway\Proj\B-3457_Rdy_xpl.dgn

8/23/99

0 5 10	PROJ. REFERENCE NO.	SHEET NO.
	B-3457	X-6

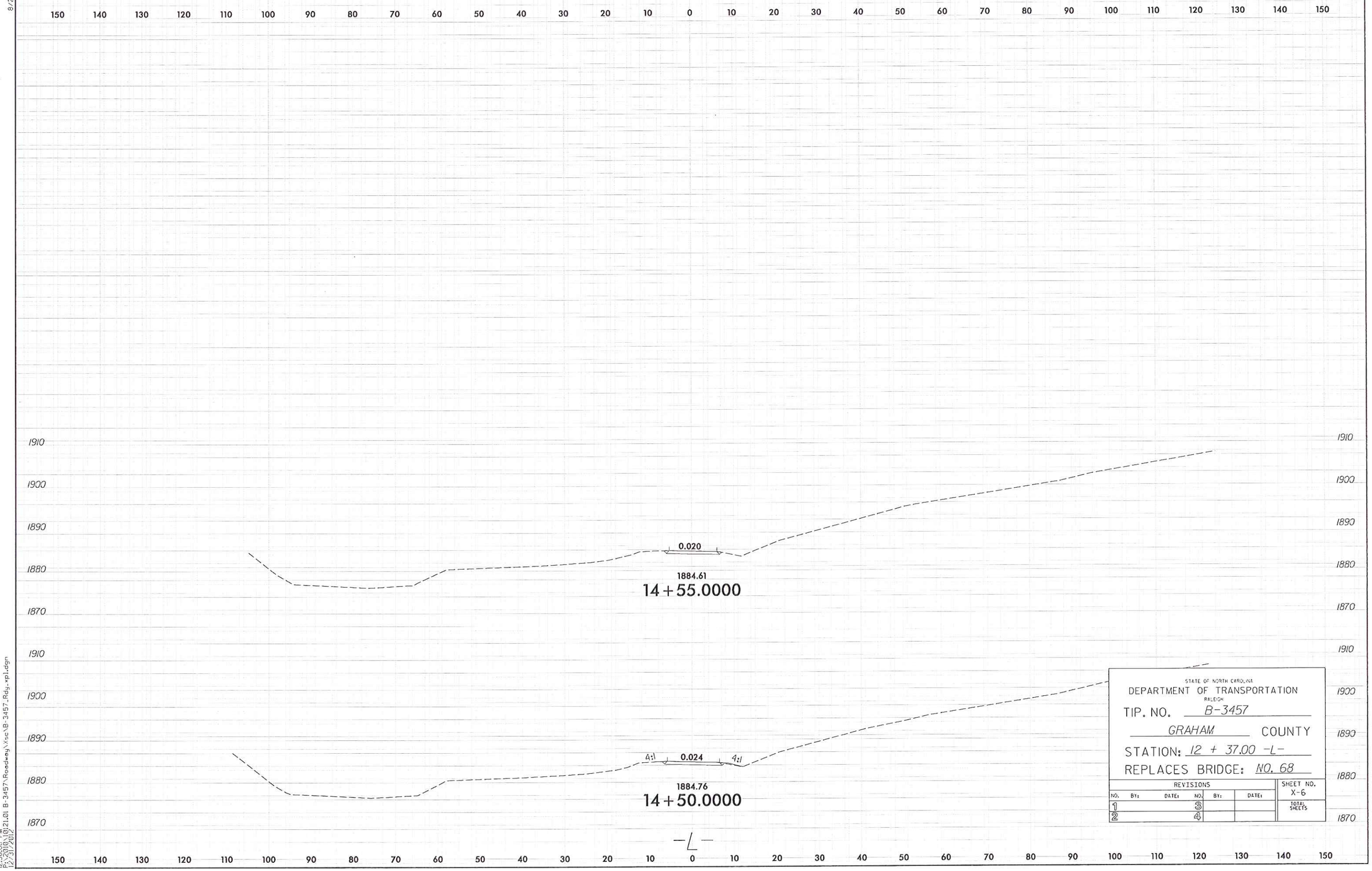

STATE OF NORTH CAROLINA
DEPARTMENT OF TRANSPORTATION
RALEIGH

TIP. NO. B-3457

GRAHAM COUNTY

STATION: 12 + 37.00 -L-

REPLACES BRIDGE: NO. 68

REVISIONS						SHEET NO.
NO.	BY:	DATE:	NO.	BY:	DATE:	X-6
1			3			TOTAL SHEETS
2			4			

2:56:08 PM
12/20/2012 10:21:01 B-3457\Roadway\Xsec\B-3457_Rdy_xpl.dgn

CONTRACT: DN00212 TIP PROJECT # B-3457

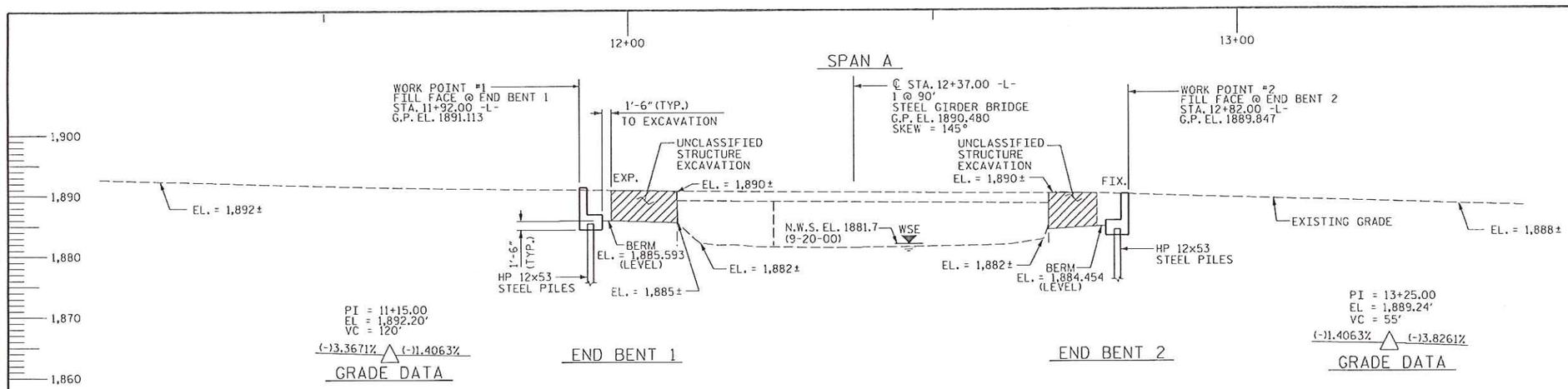

PROFILE ALONG ℄ SURVEY -L-

HORIZONTAL CURVE DATA

PI Sta 11+41.77	PI Sta 13+21.52	PI Sta 14+19.16
Δ = 33° 40' 10.3" (RT)	Δ = 12° 12' 09.8" (LT)	Δ = 16° 53' 11.7" (RT)
D = 39° 30' 51.6"	D = 22° 02' 12.6"	D = 12° 08' 20.2"
L = 85.21'	L = 55.37'	L = 139.11'
T = 43.87'	T = 27.79'	T = 70.06'
R = 145.00'	R = 260.00'	R = 472.00'

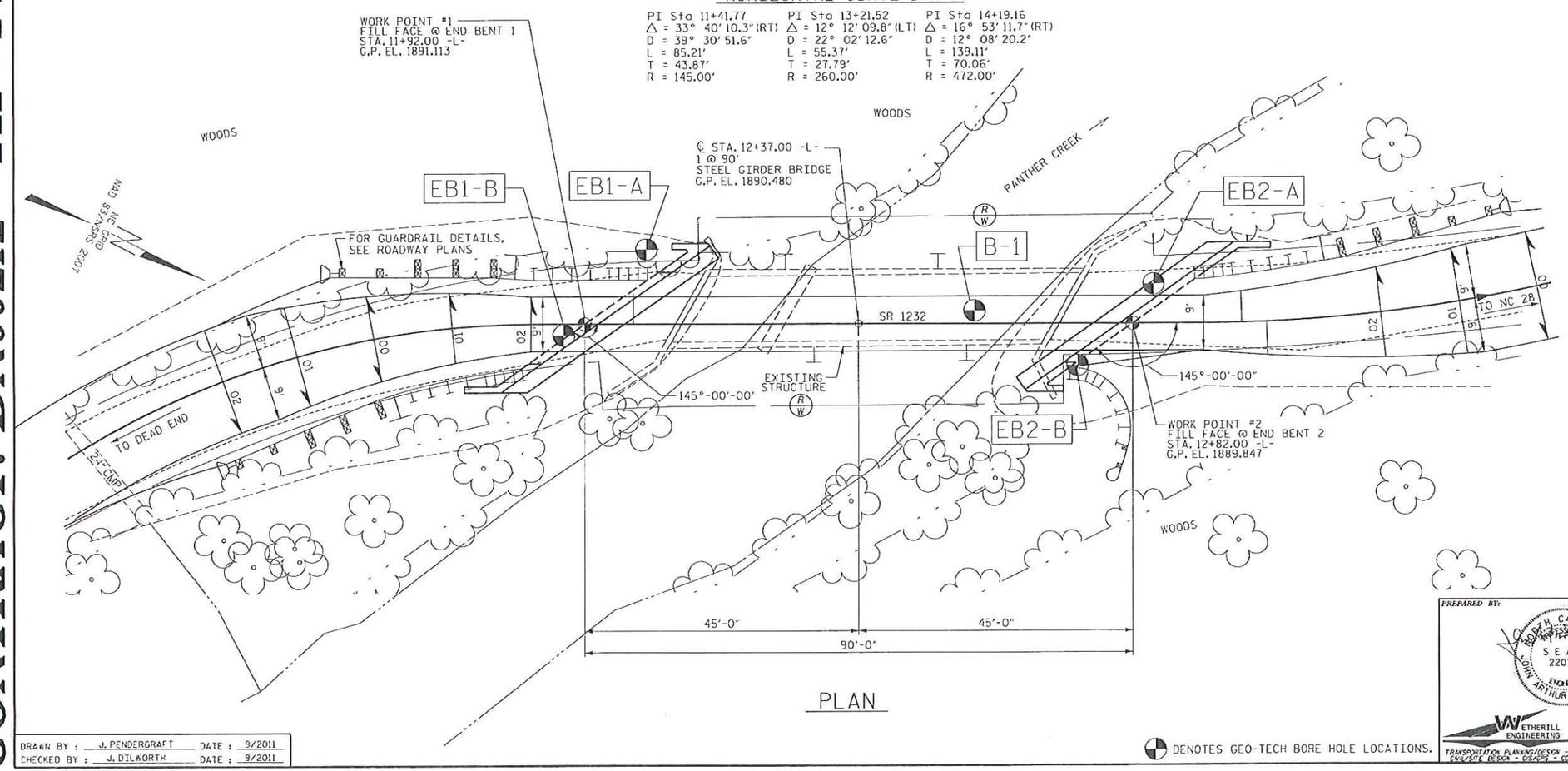

PLAN

DENOTES GEO-TECH BORE HOLE LOCATIONS.

PROJECT NO. B-3457
GRAHAM COUNTY
STATION: 12+37.00 -L-

SHEET 1 of 3 REPLACES BRIDGE 68

STATE OF NORTH CAROLINA
DEPARTMENT OF TRANSPORTATION
RALEIGH

GENERAL DRAWING
FOR BRIDGE ON SR 1232
(PANTHER CREEK ROAD)
OVER PANTHER CREEK
BETWEEN DEAD END RD. AND NC 28

PREPARED BY:
NORTH CAROLINA PROFESSIONAL SEAL 22072 ENGINEER JOHN ARTHUR DILWORTH
5-30-13
WETHERILL ENGINEERING
559 Jones Franklin Rd Suite 164
Raleigh, N.C. 27606
Bus 919 851 8077
Fax 919 851 8077
License: F-0377
TRANSPORTATION PLANNING/DESIGN - BRIDGE/STRUCTURE DESIGN
ENV/SITE DESIGN - GIS/GPS - CONSTRUCTION OBSERVATION

REVISIONS								SHEET NO.
NO.	BY:	DATE:	NO.	BY:	DATE:			S-1
1			3					TOTAL SHEETS
2			4					22

DRAWN BY : J. PENDERGRAFT DATE : 9/2011
CHECKED BY : J. DILWORTH DATE : 9/2011

5/30/2013 12:25:31 PM P:\2010\10121.01 B-3457\Structures\DGN\B3457_STR_GD1_S-01.dgn

NOTES

1. PILES AT END BENTS NO. 1 AND 2 SHALL BE DRIVEN TO A MINIMUM BEARING CAPACITY OF 60 TONS/PILE.
2. PILE EXCAVATION SHALL BE UTILIZED TO INSTALL PILES TO ELEVATION 1875.0 FT AT END BENT NO. 1 AND TO ELEVATION 1874.0 FT AT END BENT NO. 2. SEE SPECIAL PROVISIONS.
3. WHEN DRIVING PILES, THE MAXIMUM BLOW COUNT SHALL NOT BE EXCEEDED.

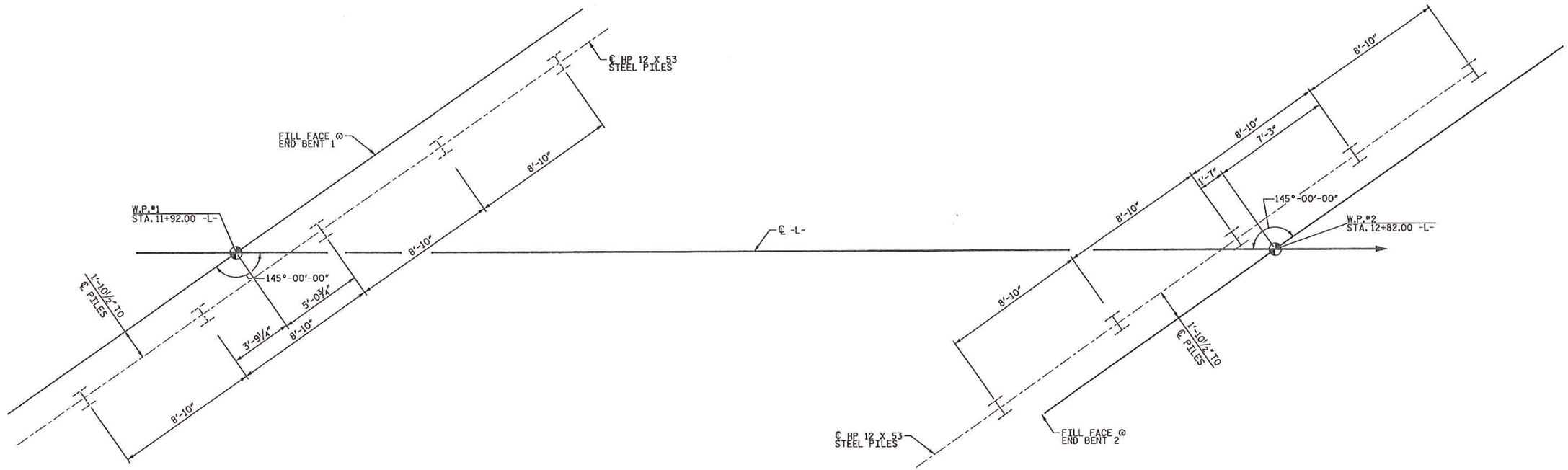

END BENT 1

END BENT 2

FOUNDATION LAYOUT

(DIMENSIONS LOCATING PILES ARE SHOWN TO PILE CENTERLINE)

PROJECT NO. B-3457

GRAHAM COUNTY

STATION: 12+37.00 -L-

SHEET 2 of 3

STATE OF NORTH CAROLINA
DEPARTMENT OF TRANSPORTATION
RALEIGH

GENERAL DRAWING

FOR BRIDGE ON SR 1132
(CALDWELL ROAD)
OVER PANTHER CREEK
OFF NC 23

PREPARED BY:

NORTH CAROLINA PROFESSIONAL SEAL 22072 ENGINEER JOHN ARTHUR DILWORTH

7-17-12

WETHERILL ENGINEERING
559 Jones Franklin Rd. Suite 164
Raleigh, N.C. 27606
Bus. 919 851 8077
Fax. 919 851 8107
License: F-0377

TRANSPORTATION PLANNING/DESIGN - BRIDGE/STRUCTURE DESIGN
ON/OFF SITE DESIGN - GRADES - CONSTRUCTION OBSERVATION

REVISIONS						SHEET NO.
NO.	BY:	DATE:	NO.	BY:	DATE:	S-2
1			3			TOTAL SHEETS
2			4			22

DRAWN BY : Z. PIATEK DATE : 10/11
CHECKED BY : J. DILWORTH DATE : 10/11

P:\2010\1012101 B-3457\Structures\DGN\B3457_STR_G02_S-02.dgn
7/17/2012 8:52:50 AM

BM #1: BL STA. 5+01.51 11' LT. EL.=1896.94' RR SPIKE IN 15" POPLAR

BM #2 BL STA. 8+50.17 34' LT. EL.=1885.73' RR SPIKE IN 15" MAPLE

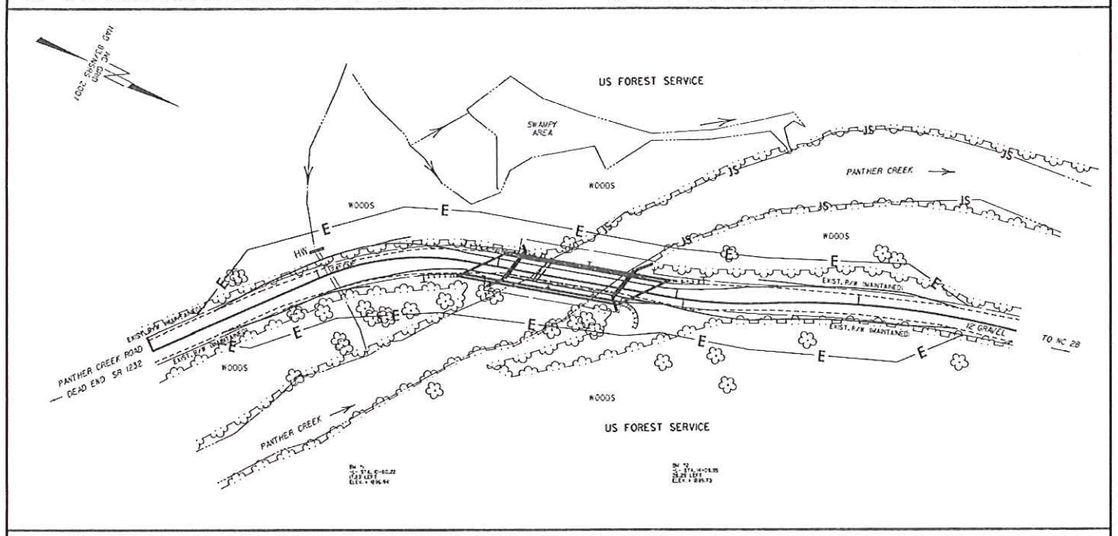

LOCATION SKETCH

NOTES

ASSUMED LIVE LOAD = HS-20 OR ALTERNATE LOADING EXCEPT THAT THE GIRDERS HAVE BEEN DESIGNED FOR HS-25.

FOR OTHER DESIGN DATA AND GENERAL NOTES, SEE 'STANDARD NOTES" SHEET.

FOR EROSION CONTROL MEASURES, SEE EROSION CONTROL PLANS.

THIS BRIDGE HAS BEEN DESIGNED BY THE STRENGTH DESIGN METHOD AS SPECIFIED IN THE AASHTO STANDARD BRIDGE DESIGN SPECIFICATIONS.

THE CLASS AA CONCRETE IN THE BRIDGE DECK SHALL CONTAIN FLY ASH OR GROUND GRANULATED BLAST FURNACE SLAG AT THE SUBSTITUTION RATE SPECIFIED IN ARTICLE 1024-1 AND IN ACCORDANCE WITH ARTICLES 1025-5 AND 1024-G OF THE STANDARD SPECIFICATIONS. NO PAYMENT WILL BE MADE FOR THIS SUBSTITUTION AS IT IS CONSIDERED INCIDENTAL TO THE COST OF THE REINFORCED CONCRETE DECK SLAB.

ALL STRUCTURAL STEEL SHALL BE AASHTO M270 GRADE 50 AND PAINTED IN ACCORDANCE WITH SYSTEM 1 OF ARTICLE 442-8 OF THE STANDARD SPECIFICATIONS, UNLESS OTHERWISE NOTED ON THE PLANS. THE COLORS OF THE INTERMEDIATE AND TOP COAT SHALL BE REVERSED. THE TOP COAT COLOR SHALL BE BROWN (FS 30045).

THE EXISTING BRIDGE SUPERSTRUCTURE CONSISTS OF TWO SPANS AT 45'-7" AND 16'-7" WITH TIMBER DECK ON I-BEAMS AND TIMBER JOIST. THE CLEAR ROADWAY WIDTH IS 11'-2". THE SUBSTRUCTURE CONSISTS OF MASONRY ABUTMENTS AND A TIMBER INTERIOR BENT WITH CONCRETE SILL. THE EXISTING STRUCTURE IS LOCATED AT THE SITE OF THE PROPOSED STRUCTURE AND SHALL BE REMOVED. THE EXISTING BRIDGE IS PRESENTLY POSTED BELOW THE LEGAL LOAD LIMIT. SHOULD THE STRUCTURAL INTEGRITY OF THE BRIDGE FURTHER DETERIORATE, THIS LOAD LIMITATION MAY BE REDUCED AS FOUND NECESSARY DURING THE LIFE OF THE PROJECT.

REMOVAL OF THE EXISTING BRIDGE SHALL BE PERFORMED SO AS NOT TO ALLOW DEBRIS TO FALL INTO THE WATER. THE CONTRACTOR SHALL REMOVE THE BRIDGE AND SUBMIT PLANS FOR DEMOLITION IN ACCORDANCE WITH ARTICLE 402-2 OF THE STANDARD SPECIFICATIONS.

THE MATERIAL SHOWN IN THE CROSS-HATCHED AREA ON SHEET 1 OF 3 SHALL BE EXCAVATED FOR A DISTANCE OF 25' LEFT AND 25' RIGHT OF CENTERLINE ROADWAY AS DIRECTED BY THE ENGINEER. THIS WORK WILL BE MEASURED AND PAID FOR AT THE LUMP SUM CONTRACT PRICE FOR UNCLASSIFIED STRUCTURE EXCAVATION.

INASMUCH AS THE PAINT SYSTEM ON THE EXISTING STRUCTURAL STEEL CONTAINS LEAD, THE CONTRACTOR'S ATTENTION IS DIRECTED TO ARTICLE 107-1 OF THE STANDARD SPECIFICATIONS. ANY COSTS RESULTING FROM COMPLIANCE WITH APPLICABLE STATE OR FEDERAL REGULATIONS PERTAINING TO HANDLING OF MATERIALS CONTAINING LEAD BASED PAINT SHALL BE INCLUDED IN THE BID PRICE FOR "REMOVAL OF EXISTING STRUCTURE AT STATION 12+37.00 -L-."

THE SUBSTRUCTURE OF THE EXISTING BRIDGE INDICATED ON THE PLANS IS FROM THE BEST INFORMATION AVAILABLE. SINCE THIS INFORMATION IS SHOWN FOR THE CONVENIENCE OF THE CONTRACTOR, THE CONTRACTOR SHALL HAVE NO CLAIM WHATSOEVER AGAINST THE DEPARTMENT OF TRANSPORTATION FOR ANY DELAYS OR ADDITIONAL COST INCURRED BASED ON DIFFERENCES BETWEEN THE EXISTING BRIDGE SUBSTRUCTURE SHOWN ON THE PLANS AND THE ACTUAL CONDITIONS AT THE PROJECT SITE.

REMOVABLE FORMS MAY BE USED IN LIEU OF METAL STAY-IN-PLACE FORMS IN ACCORDANCE WITH ARTICLE 420-3 OF THE STANDARD SPECIFICATIONS.

NEEDLE BEAMS WILL NOT BE ALLOWED UNLESS OTHERWISE CALLED FOR ON THE PLANS OR APPROVED BY THE ENGINEER.

FOR SUBMITTAL OF WORKING DRAWINGS, SEE SPECIAL PROVISIONS.

FOR FALSEWORK AND FORMWORK, SEE SPECIAL PROVISIONS.

FOR CRANE SAFETY, SEE SPECIAL PROVISIONS.

FOR GROUT FOR STRUCTURES, SEE SPECIAL PROVISIONS.

TEMPORARY EASEMENT IS AVAILABLE ALONG SR 1232 AT MILEPOST 1.7 TO FACILITATE THE DELIVERY OF BRIDGE SUPERSTRUCTURE COMPONENTS.

FOR PLACING LOAD ON STRUCTURE MEMBERS, SEE SPECIAL PROVISIONS.

HYDRAULIC DATA

DESIGN DISCHARGE	= 1,760 C.F.S.
FREQUENCY OF DESIGN FLOOD	= 25 YRS.
DESIGN HIGH WATER ELEVATION	= 1884.5
DRAINAGE AREA	= 7.4 SQ. MI.
BASIC DISCHARGE (Q100)	= 2,640 C.F.S.
BASIC HIGH WATER ELEVATION	= 1885.7 FT.

OVERTOPPING FLOOD DATA

OVERTOPPING DISCHARGE	=3,075 C.F.S.
FREQUENCY OF OVERTOPPING FLOOD	= 200 YRS.
OVERTOPPING FLOOD ELEVATION	=1889.4

TOTAL BILL OF MATERIAL

	REMOVAL OF EXISTING STRUCTURE	PILE EXCAVATION IN SOIL	PILE EXCAVATION NOT IN SOIL	UNCLASSIFIED STRUCTURE EXCAVATION	REINFORCED CONCRETE DECK SLAB	GROOVING BRIDGE FLOORS	CLASS A CONCRETE	REINFORCING STEEL	STRUCTURAL STEEL	HP 12 X 53 STEEL PILES		1'-8" X 9" CONCRETE PARAPET	ELASTOMERIC BEARINGS	FOAM JOINT SEALS	SPECIAL STEEL 2 BAR METAL RAIL
	LUMP SUM	LIN. FT.	LIN. FT.	LUMP SUM	SQ. FT.	SQ. FT.	CU. YDS.	LBS.	APPROX. LBS.	NO.	LIN. FT.	LIN. FT.	LUMP SUM	LUMP SUM	LIN. FT.
SUPERSTRUCTURE					1,582	1,021			41,100			170.70	LUMP SUM	LUMP SUM	150.60
END BENT NO.1		25.0	25.0				27.4	4111		5	50				
END BENT NO.2		12.0	38.0				26.9	4041		5	50				
TOTAL	LUMP SUM	37.0	63.0	LUMP SUM	1,582	1,021	54.3	8152	41,100	10	100	170.70	LUMP SUM	LUMP SUM	150.60

PROJECT NO. B-3457

GRAHAM COUNTY

STATION: 12+37.00 -L-

SHEET 3 of 3

STATE OF NORTH CAROLINA
DEPARTMENT OF TRANSPORTATION
RALEIGH

GENERAL DRAWING

FOR BRIDGE ON SR 1132
(CALDWELL ROAD)
OVER PANTHER CREEK
BETWEEN DEAD END RD. AND NC 28

PREPARED BY:

NORTH CAROLINA PROFESSIONAL SEAL 22072 ENGINEER JOHN ARTHUR DILWORTH

5-30-13

WETHERILL ENGINEERING
539 Jones Franklin Rd. Suite 104
Raleigh, N.C. 27606
Phone: 919 851 8077
Fax: 919 851 8077
License: F-0377

TRANSPORTATION PLANNING/DESIGN - BRIDGE/STRUCTURE DESIGN
ON/OFF SITE DESIGN - GIS/GPS - CONSTRUCTION OBSERVATION

REVISIONS									SHEET NO.
NO.	BY:	DATE:	NO.	BY:	DATE:				S-3
1			3						TOTAL SHEETS
2			4						22

DRAWN BY : Z. PIATEK DATE : 2/12

CHECKED BY : T. DIFFEE DATE : 2/12

P:\2010\10121001 B-3457\Structures\OGN\B3457_STR_G03_S-03.dgn
5/30/2013 12:31:08 PM

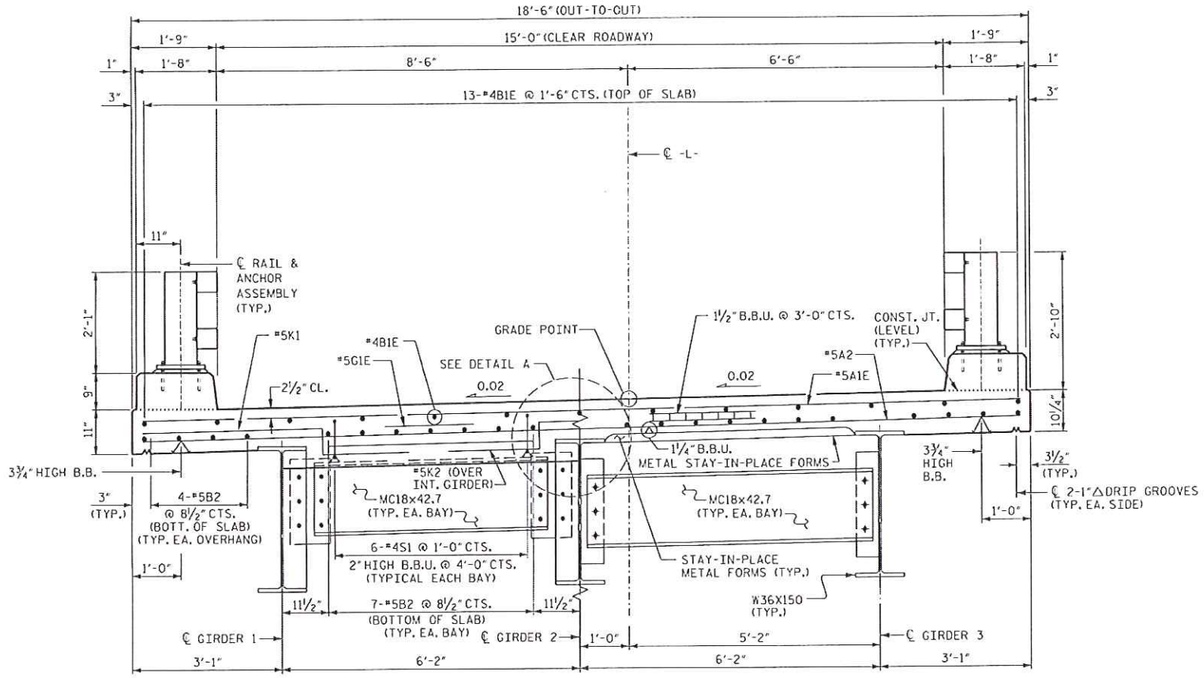

PART SECTION @ END BENT DIAPHRAGMS

PART SECTION @ INTERMEDIATE DIAPHRAGMS

TYPICAL SECTION

NOTES:

UNLESS OTHERWISE NOTED ON PLANS ALL EXPOSED CORNERS OF STRUCTURE SHALL BE CHAMFERED ¾".

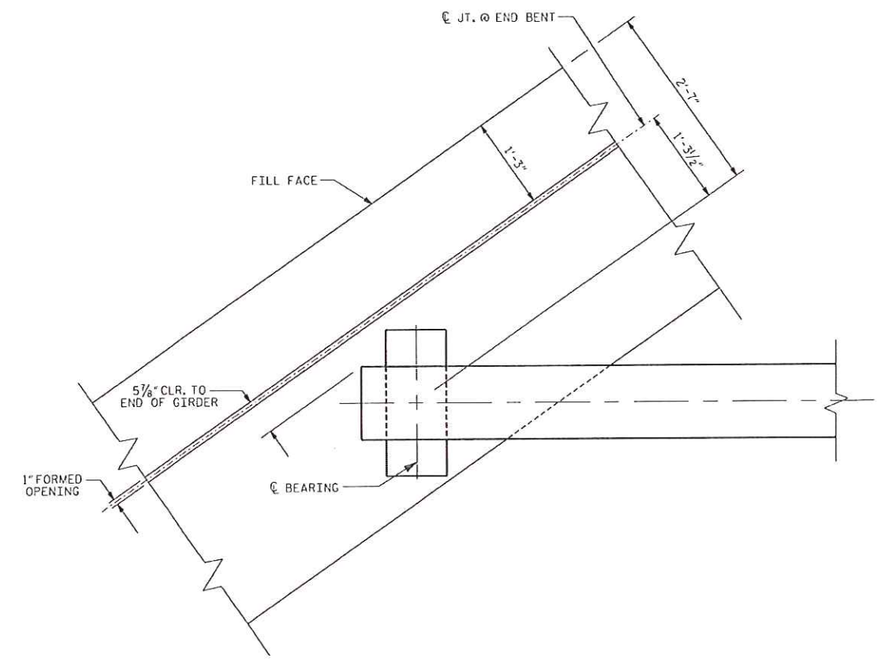

PLAN OF GIRDER AT END BENT JOINT

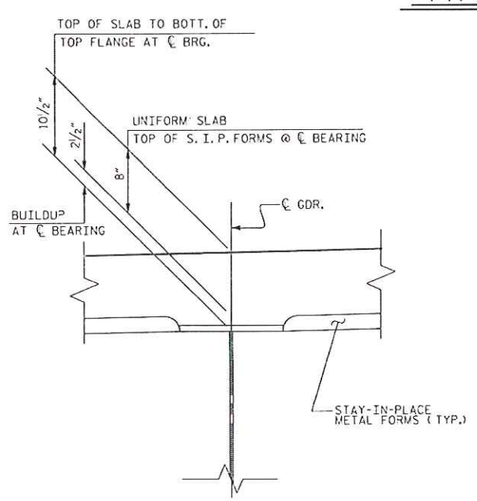

DETAIL A

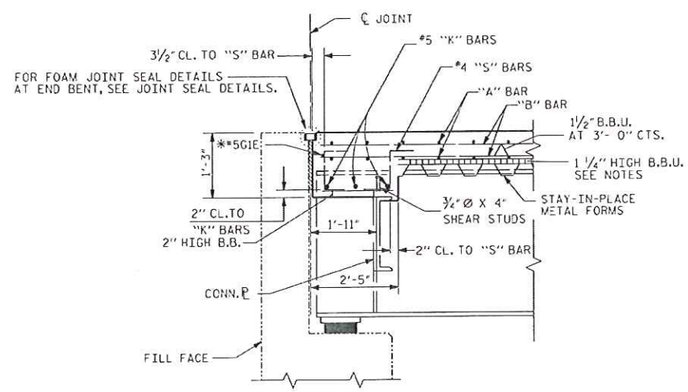

SECTION AT END BENT

* #5G BAR MAY BE SHIFTED SLIGHTLY, AS NECESSARY, TO CLEAR DIAPHRAGM AND REINFORCING STEEL.

PROJECT NO. B-3457

GRAHAM COUNTY

STATION: 12+37.00 -L-

STATE OF NORTH CAROLINA
DEPARTMENT OF TRANSPORTATION
RALEIGH

SUPERSTRUCTURE

TYPICAL SECTION

PREPARED BY:

NORTH CAROLINA PROFESSIONAL SEAL 22072 ENGINEER JOHN ARTHUR DILWORTH

5-30-13

WETHERILL ENGINEERING
559 Jones Franklin Rd. Suite 164
Raleigh, NC 27606
Ph. 919 851 8777
Fax. 919 851 8707
License F-0377

TRANSPORTATION PLANNING/DESIGN - BRIDGE/STRUCTURE DESIGN
ON/OFF SITE DESIGN - GS/CPS - CONSTRUCTION OBSERVATION

REVISIONS								SHEET NO.
NO.	BY:	DATE:	NO.	BY:	DATE:			S-4
1			3					TOTAL SHEETS
2			4					22

DRAWN BY : Z. PIATEK DATE : 2/12

CHECKED BY : J.T. DIFFEE DATE : 2/12

P:\2010\10121.01 B-3457\Structures\DGN\B3457_STR_TS_S-04.dgn
5/30/2013 12:33:00 PM

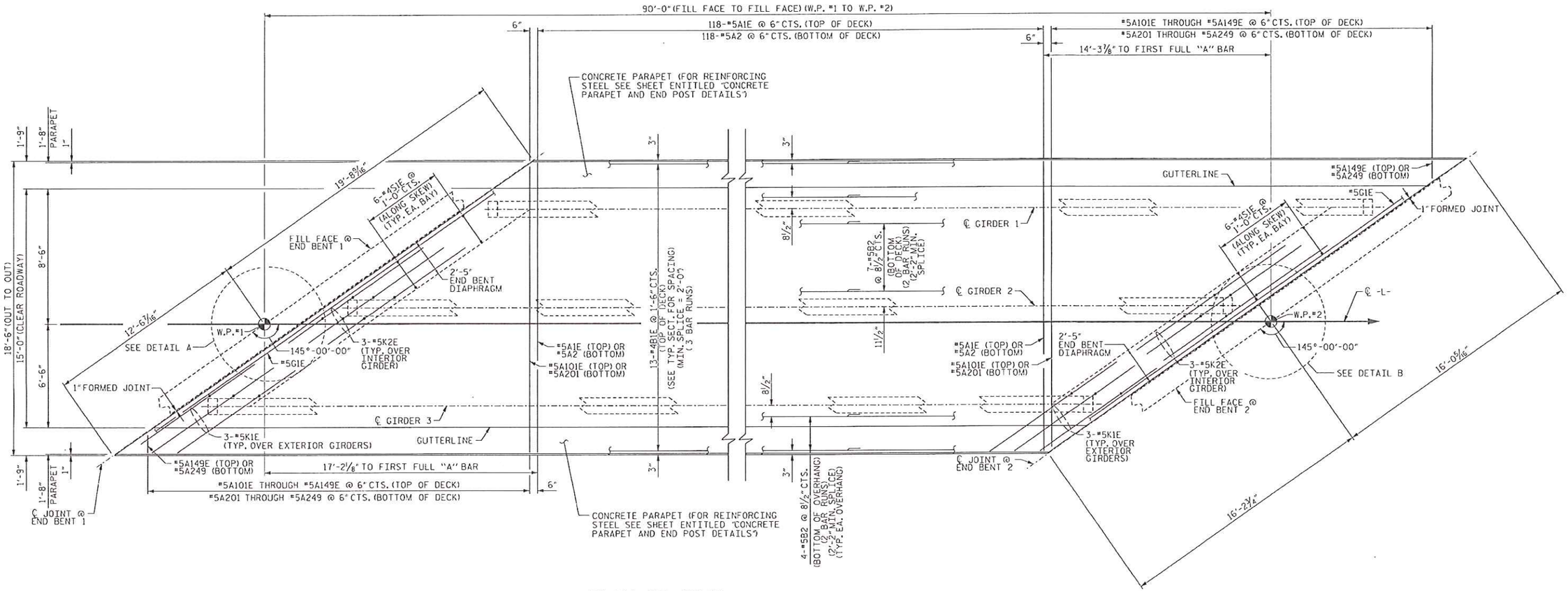

PLAN OF SPAN

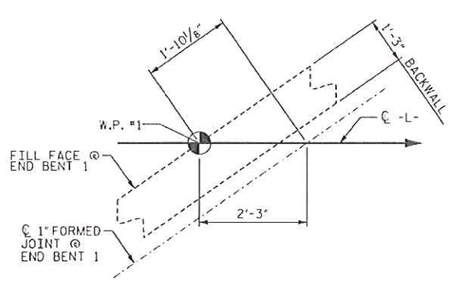

DETAIL A

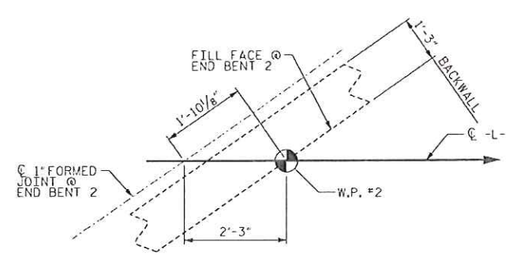

DETAIL B

PROJECT NO. B-3457

GRAHAM COUNTY

STATION: 12+37.00 -L-

STATE OF NORTH CAROLINA
DEPARTMENT OF TRANSPORTATION
RALEIGH

SUPERSTRUCTURE

PLAN OF SPAN

PREPARED BY:

NORTH CAROLINA PROFESSIONAL SEAL 22072 ENGINEER JOHN ARTHUR DILWORTH

5-30-13

WETHERILL ENGINEERING
559 Jones Franklin Rd. Suite 164
Raleigh, N.C. 27606
Ph. 919 851 8077
Fax 919 851 8107
License F-0377

TRANSPORTATION PLANNING/DESIGN - BRIDGE/STRUCTURE DESIGN
CIVIL/SITE DESIGN - GIS/GPS - CONSTRUCTION OBSERVATION

REVISIONS						
NO.	BY:	DATE:	NO.	BY:	DATE:	
1			3			
2			4			

SHEET NO. S-5

TOTAL SHEETS 22

DRAWN BY : Z. PIATEK DATE : 2/12
CHECKED BY : J.T. DIFFEE DATE : 2/12

P:\2010\10121101 B3457\Structures\DGN\B3457_STR_PS_S-05.dgn
5/30/2013 12:36:13 PM

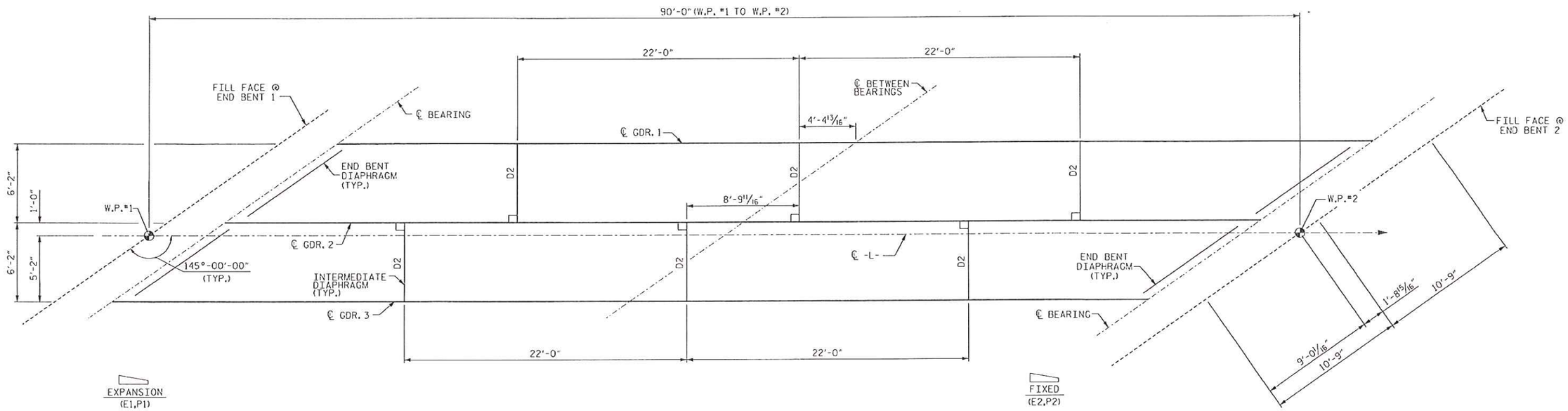

SPAN "A"

FRAMING PLAN

PROJECT NO. B-3457

GRAHAM COUNTY

STATION: 12+37.00 -L-

STATE OF NORTH CAROLINA
DEPARTMENT OF TRANSPORTATION
RALEIGH

SUPERSTRUCTURE

FRAMING PLAN

PREPARED BY:

NORTH CAROLINA PROFESSIONAL SEAL 22072 ENGINEER JOHN ARTHUR DILWORTH

5-30-13

WETHERILL ENGINEERING
559 James Franklin Rd. Suite 164
Raleigh, N.C. 27606
Bus. 919 851 8077
Fax. 919 851 8107
License F-0377

TRANSPORTATION PLANNING/DESIGN - BRIDGE/STRUCTURE DESIGN
CIVIL/SITE DESIGN - GIS/GPS - CONSTRUCTION OBSERVATION

REVISIONS								SHEET NO.
NO.	BY:	DATE:	NO.	BY:	DATE:			S-6
1			3					TOTAL SHEETS
2			4					22

DRAWN BY : Z. PIATEK DATE : 10/11

CHECKED BY : T. DIFFEE DATE : 10/11

P:\2010\10121.01 B-3457\Structures\DGN\B3457_STR_FP_S-06.dgn
5/30/2013 12:37:49 PM

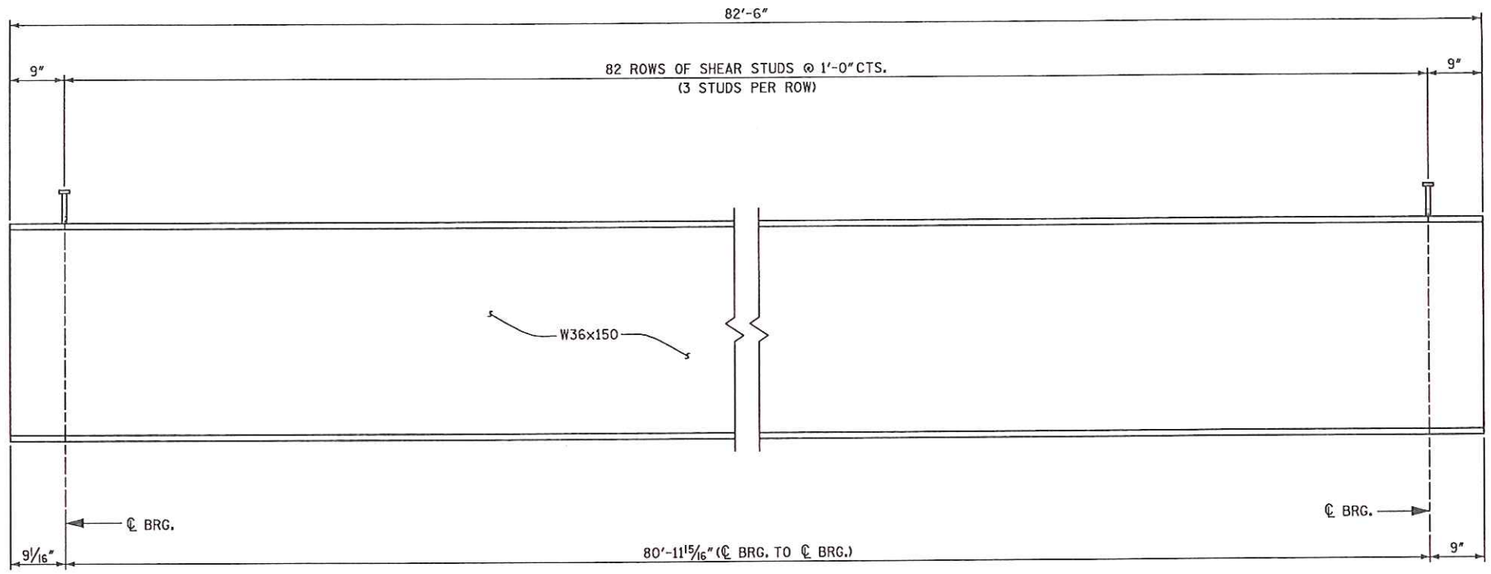

GIRDER ELEVATION - SPAN A

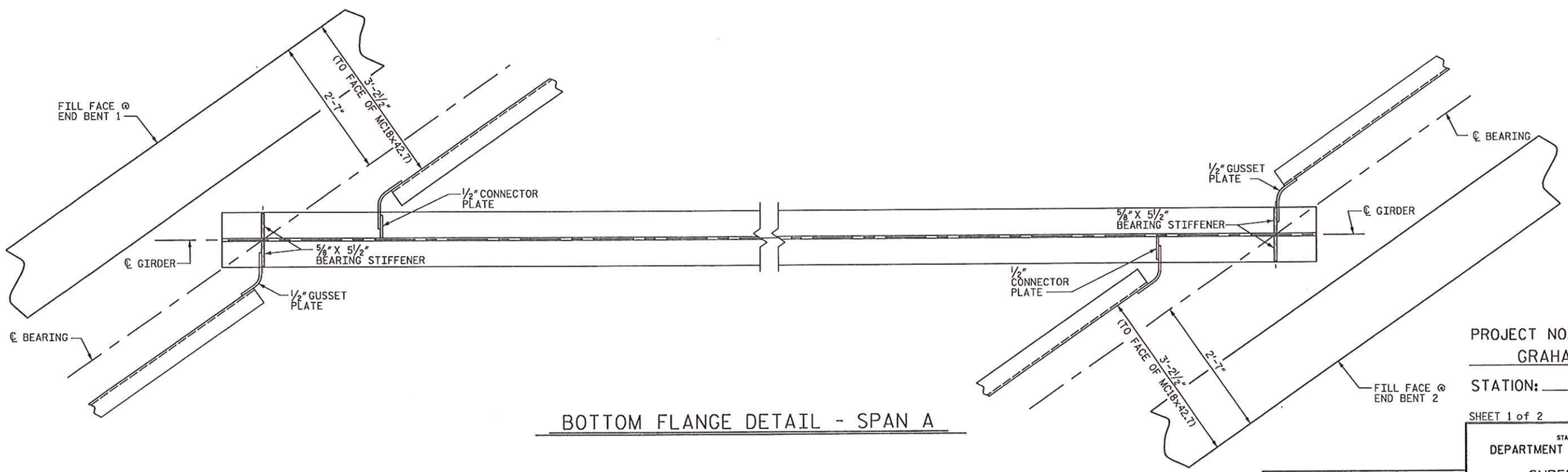

BOTTOM FLANGE DETAIL - SPAN A

PROJECT NO. B-3457

GRAHAM COUNTY

STATION: 12+37.00 -L-

SHEET 1 of 2

STATE OF NORTH CAROLINA
DEPARTMENT OF TRANSPORTATION
RALEIGH

SUPERSTRUCTURE

STRUCTURAL
STEEL DETAILS

PREPARED BY:

NORTH CAROLINA PROFESSIONAL SEAL 22072 ENGINEER JOHN ARTHUR DILWORTH

7-17-12

WETHERILL ENGINEERING
559 Jones Franklin Rd. Suite 164
Raleigh, N.C. 27606
Bus: 919 851 8077
Fax: 919 851 8107
License: F-0372

TRANSPORTATION PLANNING/DESIGN – BRIDGE/STRUCTURE DESIGN
CULVERT DESIGN – GEOTECH – CONSTRUCTION INSPECTION

REVISIONS						SHEET NO.
NO.	BY:	DATE:	NO.	BY:	DATE:	S-7
1			3			TOTAL SHEETS
2			4			22

DRAWN BY : G.F. WILSON DATE : 06/11
CHECKED BY : J.A. DILWORTH DATE : 06/11

P:\2010\1012101 B-3457\Structures\DGN\B3457_STR_GRD1_S-07.dgn
7/17/2012 9:03:14 AM

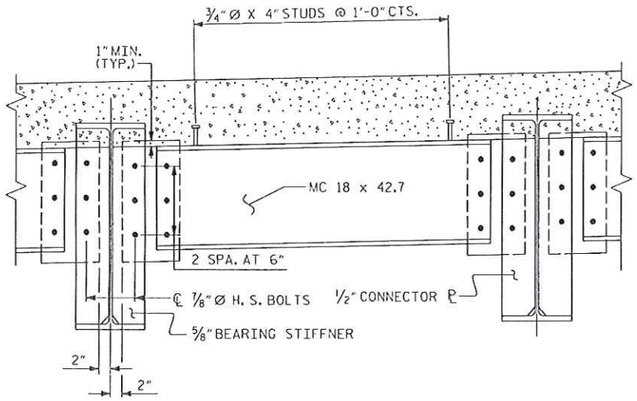

END BENT DIAPHRAGM

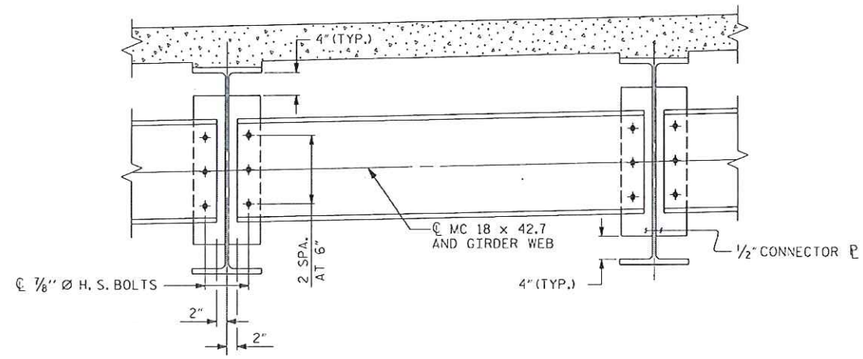

D2-INTERMEDIATE DIAPHRAGM

NOTES:

ALL STRUCTURAL STEEL SHALL BE AASHTO GRADE 50 AND PAINTED IN ACCORDANCE WITH SYSTEM 1 OF ARTICLE 442-8 OF THE STANDARD SPECIFICATIONS UNLESS OTHERWISE NOTED ON THE PLANS. THE COLORS OF THE INTERMEDIATE AND TOP COAT SHALL BE REVERSED. THE TOP COAT COLOR SHALL BE BROWN (FS 30045).

ALL FIELD CONNECTIONS TO BE ⅞" DIAMETER HIGH STRENGTH BOLTS UNLESS OTHERWISE NOTED.

TENSION ON THE AASHTO M164 BOLTS SHALL BE CALIBRATED USING DIRECT TENSION INDICATOR WASHERS IN ACCORDANCE WITH ARTICLE 440-8 OF THE STANDARD SPECIFICATIONS.

ALL DIMENSIONS SHOWN ARE HORIZONTAL OR VERTICAL, UNLESS OTHERWISE NOTED.

BEARING STIFFENERS ARE TO BE PLACED NORMAL TO THE WEB OF THE GIRDER AND SHALL BE PLUMB.

ENDS OF BEAMS SHALL BE PLUMB.

A CHARPY V-NOTCH TEST IS REQUIRED ON ALL BEAM SECTIONS IN ACCORDANCE WITH ARTICLE 1072-7 OF THE STANDARD SPECIFICATIONS.

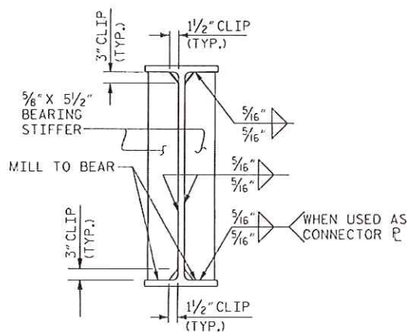

BEARING STIFFENER

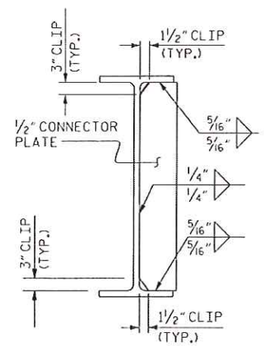

END BENT DIAPHRAGM CONNECTOR PLATE

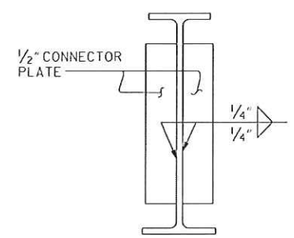

INTERMEDIATE DIAPHRAGM CONNECTOR PLATE

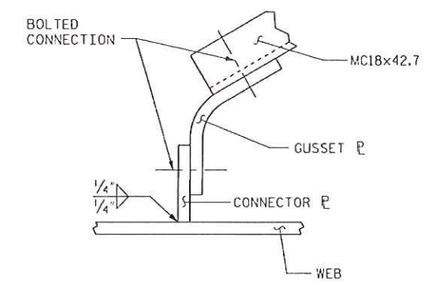

GUSSET PLATE DETAIL

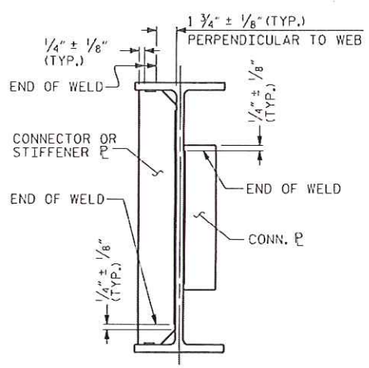

TYPICAL STIFFENER OR CONNECTOR PLATE CONNECTIONS

WELD TERMINATION DETAILS

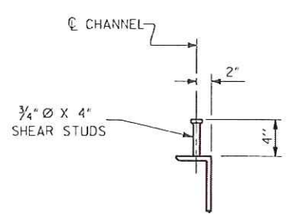

SHEAR STUD DETAILS

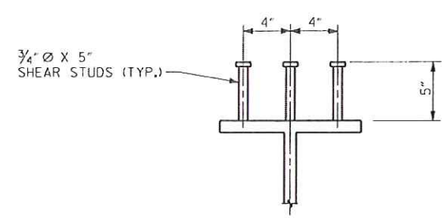

SHEAR STUD DETAILS

PROJECT NO. B-3457

GRAHAM COUNTY

STATION: 12+37.00 -L-

SHEET 2 of 2

STATE OF NORTH CAROLINA
DEPARTMENT OF TRANSPORTATION
RALEIGH

PRELIMINARY

STRUCTURAL STEEL DETAILS

PREPARED BY:

NORTH CAROLINA PROFESSIONAL SEAL 22012 ENGINEER JOHN ARTHUR DILWORTH

5-30-13

WETHERILL ENGINEERING
559 Jones Franklin Rd. Suite 154
Raleigh, N.C. 27606
Ph. 919 851 8077
Fax 919 851 8177
License F-0377

TRANSPORTATION PLANNING/DESIGN - BRIDGE/STRUCTURE DESIGN
CIVIL/SITE DESIGN - GIS/CMS - CONSTRUCTION OBSERVATION

REVISIONS								SHEET NO.
NO.	BY:	DATE:	NO.	BY:	DATE:			S-8
1			3					TOTAL SHEETS
2			4					22

DRAWN BY : Z. PIATEK DATE : 2/12
CHECKED BY : T. DIFFEE DATE : 2/12

P:\2010\1012101_B-3457\Structures\DGN\B3457_STR_GRD2_S08.dgn
5/30/2013 12:42:16 PM

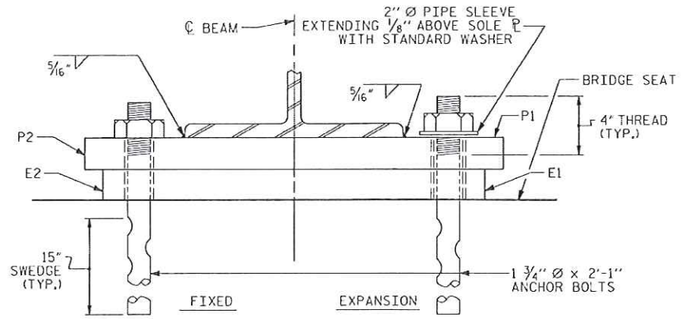

END VIEW

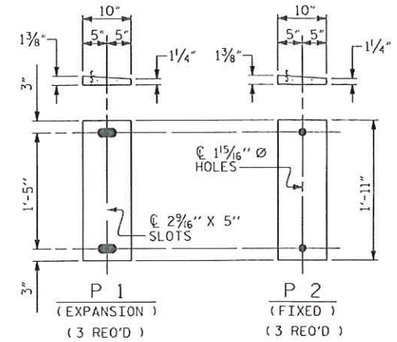

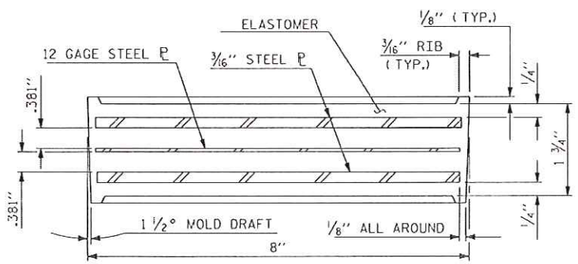

TYPICAL SECTION OF ELASTOMERIC BEARINGS

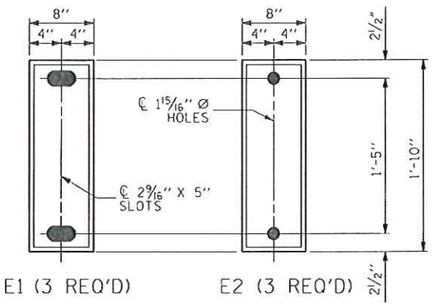

PLAN VIEW OF ELASTOMERIC BEARING

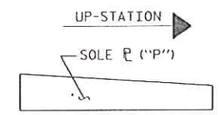

SOLE PL PLACEMENT DETAIL

NOTES

AT ALL FIXED POINTS OF SUPPORT, NUTS FOR ANCHOR BOLTS ARE TO BE TIGHTENED FINGER TIGHT AND THEN BACKED OFF 1/2 TURN. THE THREAD OF THE NUT AND BOLT SHALL THEN BE BURRED WITH A SHARP POINTED TOOL.

THE 2" Ø PIPE SLEEVE SHALL BE CUT FROM SCHEDULE 40 PVC PLASTIC PIPE. THE PVC PLASTIC PIPE SHALL MEET THE REQUIREMENTS OF ASTM D1785.

THE PAYMENT FOR THE PIPE SLEEVES SHALL BE INCLUDED IN THE SEVERAL PAY ITEMS.

FOR PAINTED STRUCTURAL STEEL (EXCLUDING AASHTO M270 GRADE 50W), SOLE PLATES, ANCHOR BOLTS, NUTS AND WASHERS SHALL BE GALVANIZED IN ACCORDANCE WITH THE STANDARD SPECIFICATIONS.

ANCHOR BOLTS SHALL MEET THE REQUIREMENTS OF ASTM A449. NUTS SHALL MEET THE REQUIREMENTS OF AASHTO M291-DH OR AASHTO M292-2H. WASHERS SHALL MEET THE REQUIREMENTS OF AASHTO M293. SHOP DRAWINGS ARE NOT REQUIRED FOR ANCHOR BOLTS, NUTS AND WASHERS. SHOP INSPECTION IS REQUIRED.

WHEN FIELD WELDING THE SOLE PLATE TO THE GIRDER FLANGE, USE TEMPERATURE INDICATING WAX PENS, OR OTHER SUITABLE MEANS, TO ENSURE THAT THE TEMPERATURE OF THE SOLE PLATE DOES NOT EXCEED 300°F. TEMPERATURES ABOVE THIS MAY DAMAGE THE ELASTOMER.

ALL SURFACES OF BEARING PLATES SHALL BE SMOOTH AND STRAIGHT.

THE ELASTOMERIC IN THE STEEL REINFORCED BEARINGS SHALL HAVE A SHEAR MODULUS OF 0.160 K.S.I. IN ACCORDANCE WITH AASHTO M251.

FOR STEEL REINFORCED ELASTOMERIC BEARINGS, SEE SPECIAL PROVISIONS.

TYPE I

-LOAD RATINGS-	
	MAX.D.L.+L.L.
TYPE I	91 K

DEAD LOAD DEFLECTION TABLE FOR BEAMS

	SPAN A											SPAN A										
	BEAMS 1 & 3											BEAM 2										
TENTH POINTS	0	.1	.2	.3	.4	.5	.6	.7	.8	.9	0	0	.1	.2	.3	.4	.5	.6	.7	.8	.9	0
DEFLECTION DUE TO WEIGHT OF GIRDER	0	0.016	0.030	0.041	0.049	0.051	0.049	0.041	0.030	0.016	0	0	0.016	0.030	0.041	0.049	0.051	0.049	0.041	0.030	0.016	0
DEFLECTION DUE TO WEIGHT OF SLAB *	0	0.073	0.139	0.190	0.222	0.233	0.222	0.190	0.139	0.073	0	0	0.069	0.131	0.179	0.210	0.221	0.210	0.179	0.131	0.069	0
DEFLECTION DUE TO WEIGHT OF BARRIER RAIL	0	0.008	0.016	0.021	0.025	0.026	0.025	0.021	0.016	0.008	0	0	0.008	0.016	0.021	0.025	0.026	0.025	0.021	0.016	0.008	0
TOTAL DEAD LOAD DEFLECTION	0	0.097	0.185	0.252	0.296	0.310	0.296	0.252	0.185	0.097	0	0	0.093	0.177	0.241	0.284	0.298	0.284	0.241	0.177	0.093	0
VERTICAL CURVE ORDINATE	0	0	0	0	0	0	0	0	0	0	0	0	0	0	0	0	0	0	0	0	0	0
ORDINATE DUE TO SUPERELEVATION	0	0	0	0	0	0	0	0	0	0	0	0	0	0	0	0	0	0	0	0	0	0
REQUIRED CAMBER	0	1 3/16	2 3/16	3	3 9/16	3 3/4	3 9/16	3	2 3/16	1 3/16	0	0	1 1/8	2 1/8	2 15/16	3 3/8	3 9/16	3 3/8	2 15/16	2 1/8	1 1/8	0

* INCLUDES SLAB, BUILDUPS & STAY-IN-PLACE FORMS.
ALL VALUES ARE SHOWN IN FEET (DECIMAL FORM), EXCEPT "REQUIRED CAMBER", WHICH IS GIVEN IN INCHES (FRACTION FORM).

PROJECT NO. B-3457
GRAHAM COUNTY
STATION: 12+37.00 -L-

STATE OF NORTH CAROLINA
DEPARTMENT OF TRANSPORTATION
RALEIGH

SUPERSTRUCTURE

ELASTOMERIC BEARING DETAILS & DEAL LOAD DEFLECTIONS

PREPARED BY:
NORTH CAROLINA PROFESSIONAL SEAL 22072 ENGINEER JOHN ARTHUR DILWORTH
5-30-13
WETHERILL ENGINEERING
559 Jones Franklin Rd. S.Ste 104 Raleigh, N.C. 27606 Bus. 919 851 8077 Fax. 919 851 8107 License # F-0377
TRANSPORTATION PLANNING/DESIGN - BRIDGE/STRUCTURE DESIGN CIVIL/SITE DESIGN - ROADWAY - CONSTRUCTION OBSERVATION

REVISIONS								SHEET NO.
NO.	BY:	DATE:	NO.	BY:	DATE:			S-9
1			3					TOTAL SHEETS
2			4					22

DRAWN BY : J. PENDERGRAFT DATE : 2/12
CHECKED BY : T. DIFFEE DATE : 2/12

P:\2010\1012101_B-3457\Structures\DGN\B3457_STR_EBrg_S-09.dgn
5/30/2013 12:14:16 PM

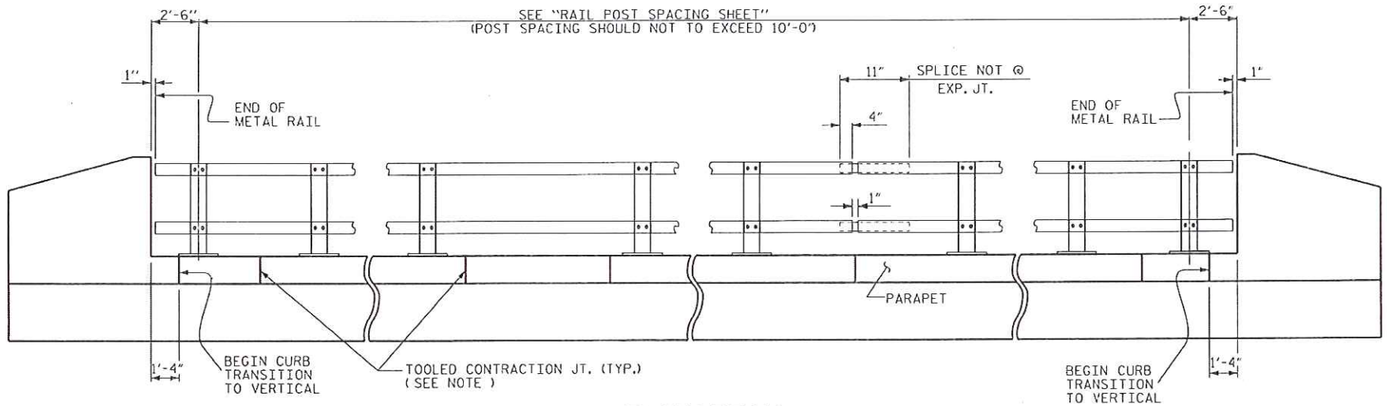

ELEVATION

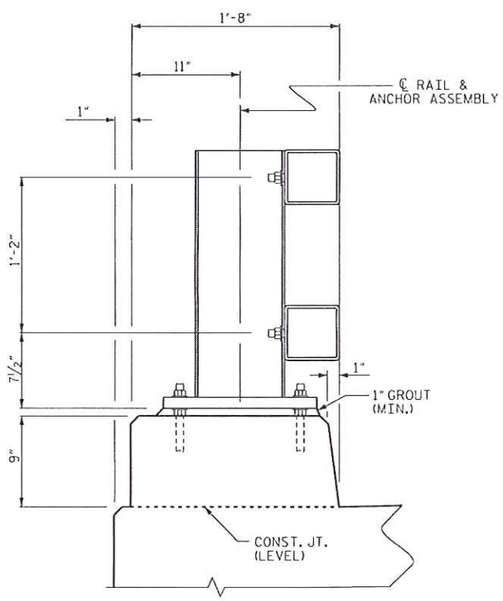

SECTION THRU RAIL

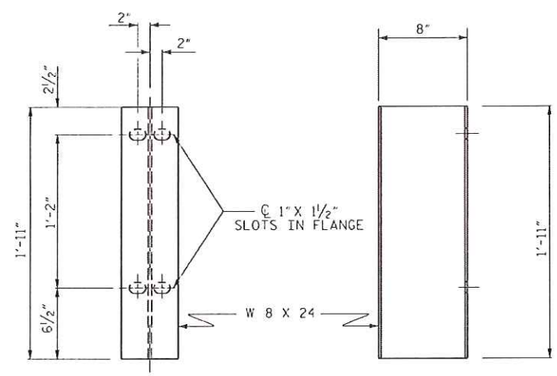

FRONT ELEVATION SIDE ELEVATION

DETAILS OF POST

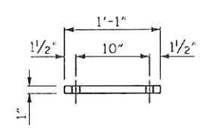

FRONT ELEVATION

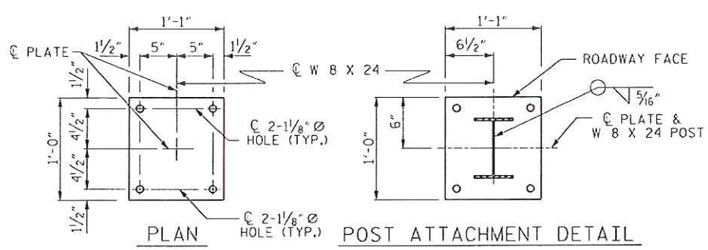

PLAN POST ATTACHMENT DETAIL

POST BASE DETAILS

NOTES

FOR SPECIAL STEEL 2 BAR METAL RAIL, SEE SPECIAL PROVISIONS.

METAL RAIL SHALL BE PAINTED STEEL IN ACCORDANCE WITH THE REQUIREMENTS OF THE GENERAL NOTES AND THE FOLLOWING SPECIFICATIONS.

PAINTED STEEL RAILS

SQUARE STRUCTRUAL TUBING RAIL ELEMENTS SHALL CONFIRM TO ASTM A500 GRADE B, A501 OR A618.

ANCHOR PLATES, POSTS, POST BASES AND RAIL SPLICE BARS SHALL MEET AASHTO M270 GRADE 250 STRUCTURAL STEEL.

SHIMS AND RAIL CAPS SHALL MEET ASTM A570 FOR GRADE 230 OR A611 FOR GRADE C.

REDUCED BASE WELDED STUDS SHALL MEET ASTM A108.

ANCHOR BOLTS SHALL CONFORM TO ASTM F1554 GRADE 105, NUTS TO ASTM A563 DH, AND WASHERS TO ASTM A436. ANCHOR BOLTS, NUTS AND WASHERS SHALL BE GALVANIZED.

IN LIEU OF HEADED ANCHOR BOLTS, ASTM F1554 ROD THREADED AT BOTH ENDS MAY BE USED. USE ASTM A563 DH NUT FOR ANCHOR HEAD. BURR THREADS AT EMBEDMENT END WITH SHARP TOOL AND TACK WELD NUT TO ANCHOR ROD TO PREVENT ANCHOR HEAD NUT FROM BEING TURNED.

POST, POST BASE AND RAILING TUBES SHALL BE SHOP PAINTED IN ACCORDANCE WITH SYSTEM 1 OF ARTICLE 442-8 OF THE STANDARD SPECIFICATIONS. THE COLOR OF THE INTERMEDIATE AND TOP COAT SHALL BE REVERSED. THE TOP COAT COLOR SHALL BE BROWN (FS 30045).

AFTER INSTALLATION OF METAL RAILS, FIELD PAINT 2 COATS OF ACRYLIC BROWN PAINT (COLOR FS 30045) TO ALL EXPOSED STUDS, ANCHOR BOLTS, NUTS AND WASHERS.

GENERAL NOTES

1. RAILING SHALL BE CONTINUOUS FROM END POST TO END POST OF BRIDGE. EACH JOINT IN RAIL LENGTH SHALL BE SPLICED AS DETAILED. PANEL LENGTHS OF RAIL SHALL BE ATTACHED TO A MINIMUM OF THREE POSTS.
2. CERTIFIED MILL REPORTS ARE REQUIRED FOR RAILS AND POSTS. SHOP INSPECTION IS NOT REQUIRED.
3. METAL RAIL POSTS SHALL BE SET NORMAL TO CURB GRADE.
4. METHOD OF MEASUREMENT FOR METAL RAILS: FOR LENGTH OF METAL RAILS TO BE PAID FOR, SEE SPECIAL PROVISIONS.
5. CURVED RAIL USAGE: WHERE RAILS ARE LOCATED IN AREAS OF VERTICAL CURVATURE THE CONTRACTOR MAY, AT HIS OPTION, HAVE THE REQUIRED CURVATURE IN THE RAIL FORMED IN THE SHOP OR IN THE FIELD. IN EITHER EVENT, THE RAIL SHALL CONFORM WITHOUT BUCKLING OR KINKING TO THE REQUIRED CURVATURE IN A UNIFORM MANNER ACCEPTABLE TO THE ENGINEER.
6. TO INSURE FUTURE IDENTIFICATION OF THE FABRICATOR, A PERMANENT IDENTIFYING MARK SHALL BE PLACED ON EACH POST. THE METHOD OF MARKING AND LOCATION SHALL BE SUCH THAT IT DOES NOT DETRACT FROM THE APPEARANCE OF THE POST, BUT REMAINS VISIBLE AFTER RAIL PLACEMENT.
7. MINOR VARIATIONS IN DETAILS OF METAL RAIL WILL BE CONSIDERED. DETAILS OF SUCH VARIATIONS, IF DESIRED, SHALL BE SUBMITTED FOR APPROVAL.
8. GROOVED CONTRACTION JOINTS, ½" IN DEPTH, SHALL BE TOOLED IN ALL EXPOSED FACES OF THE PARAPET IN ACCORDANCE WITH ARTICLE 825-10(B) OF THE STANDARD SPECIFICATIONS. THE CONTRACTION JOINT SHALL BE LOCATED AT A SPACING OF 15 FT. ALONG LENGTH OF PARAPET.
9. THE GROUT BED SHALL BE PLACED PRIOR TO INSTALLING THE END POSTS. GROUT SHALL BE NON-SHRINK, NON-METALLIC GROUT, SEE SPECIAL PROVISIONS. GROUT BED HEIGHT SHALL NOT EXCEED 1½".
10. TORQUE NUTS ON REDUCED BASE WELDED STUDS TO 100 FT. LBS.

PAY LENGTH = 150.60 LIN. FT.

PROJECT NO. B-3457
GRAHAM COUNTY
STATION: 12+37.00 -L-

SHEET 1 of 2

STATE OF NORTH CAROLINA
DEPARTMENT OF TRANSPORTATION
RALEIGH

SUPERSTRUCTURE

SPECIAL STEEL
2 BAR METAL RAIL

PREPARED BY:
NORTH CAROLINA PROFESSIONAL SEAL 22072 ENGINEER JOHN ARTHUR DILWORTH
5-30-13
WETHERILL ENGINEERING
559 James Pringle Rd. Suite 164
Raleigh, N.C. 27606
Bus. 919 851 8077
Fax. 919 851 8097
License F-0377
TRANSPORTATION PLANNING/DESIGN - BRIDGE/STRUCTURE DESIGN
CULVERT DESIGN - GIS/GPS - CONSTRUCTION OBSERVATION

REVISIONS							SHEET NO.
NO.	BY:	DATE:	NO.	BY:	DATE:		S-10
1			3				TOTAL SHEETS
2			4				22

DRAWN BY : Z. PIATEK DATE : 2/12
CHECKED BY : T. DIFFEE DATE : 2/12

P:\20101012\01 B-3457\Structures\DGN\B3457_STR_2BMR1_S-10.dgn
5/30/2013 12:48:51 PM

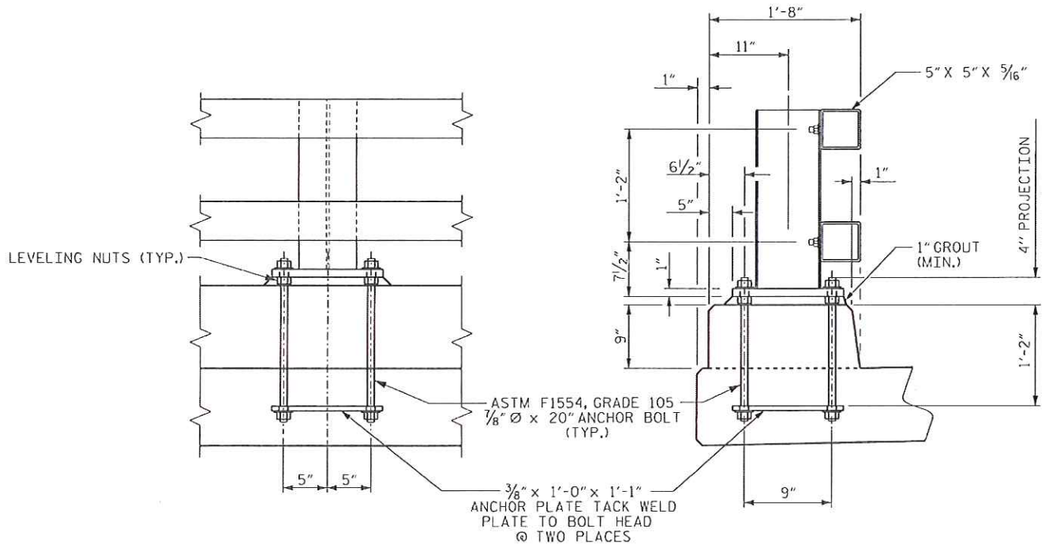

RAIL POST ATTACHMENT DETAILS

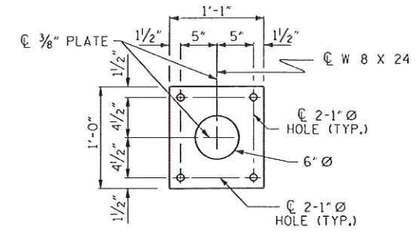

ANCHOR PLATE DETAILS

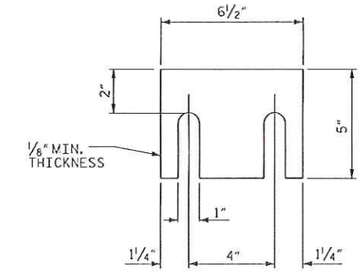

RAILING SHIM DETAIL

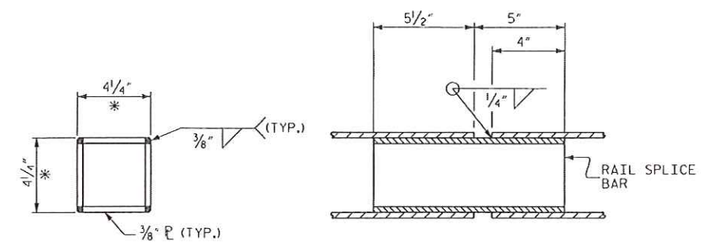

RAIL SPLICE DETAILS

* - DIMENSION AFTER GRINDING RADIUS ON CORNERS TO MATCH INSIDE OF METAL RAIL.

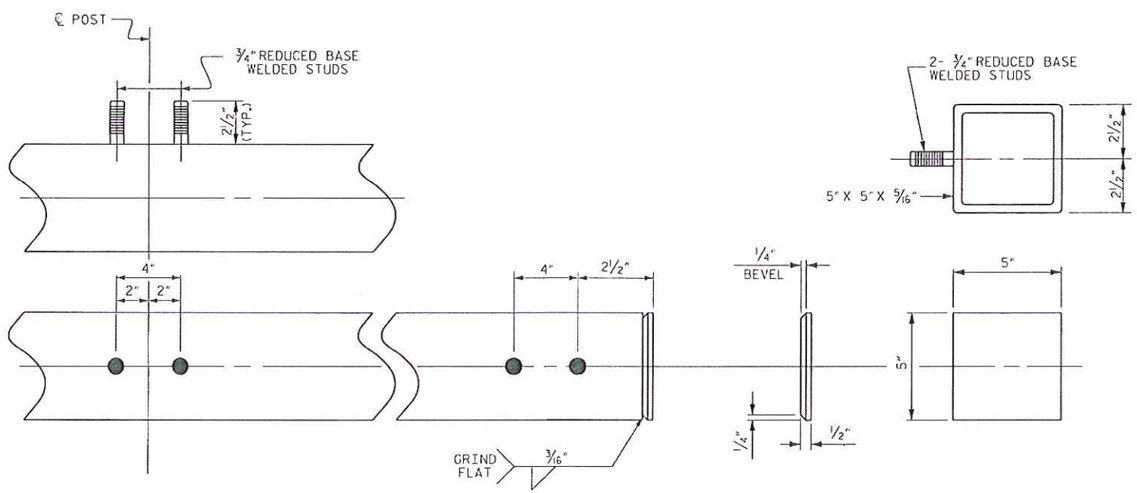

RAIL CAP AND ATTACHMENT STUD DETAILS

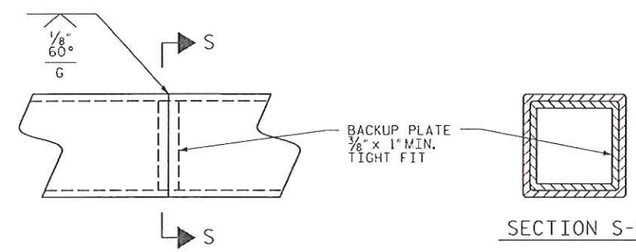

SECTION S-S

RAIL WELDED SPLICE DETAILS

PROJECT NO. B-3457

GRAHAM COUNTY

STATION: 12+37.00 -L-

SHEET 2 of 2

STATE OF NORTH CAROLINA
DEPARTMENT OF TRANSPORTATION
RALEIGH

SUPERSTRUCTURE

SPECIAL STEEL
2 BAR METAL RAIL

PREPARED BY:

NORTH CAROLINA PROFESSIONAL SEAL 22072 ENGINEER JOHN ARTHUR DILLNORTH

5-30-13

WETHERILL ENGINEERING
559 Jones Franklin Rd Suite 164
Raleigh, N.C. 27606
Bus 919 851 6077
Fax 919 851 6027
License F-0377

TRANSPORTATION PLANNING/DESIGN - BRIDGE/STRUCTURE DESIGN
CIVIL/SITE DESIGN - GIS/GPS - CONSTRUCTION OBSERVATION

REVISIONS						SHEET NO.
NO.	BY:	DATE:	NO.	BY:	DATE:	S-11
1			3			TOTAL SHEETS
2			4			22

DRAWN BY : Z. PIATEK DATE : 2/12
CHECKED BY : T. DIFFEE DATE : 2/12

P:\2010\10121.01_B-3457\Structures\DGN\B3457_STR_2BMR2_S-11.dgn
5/30/2013 12:50:36 PM

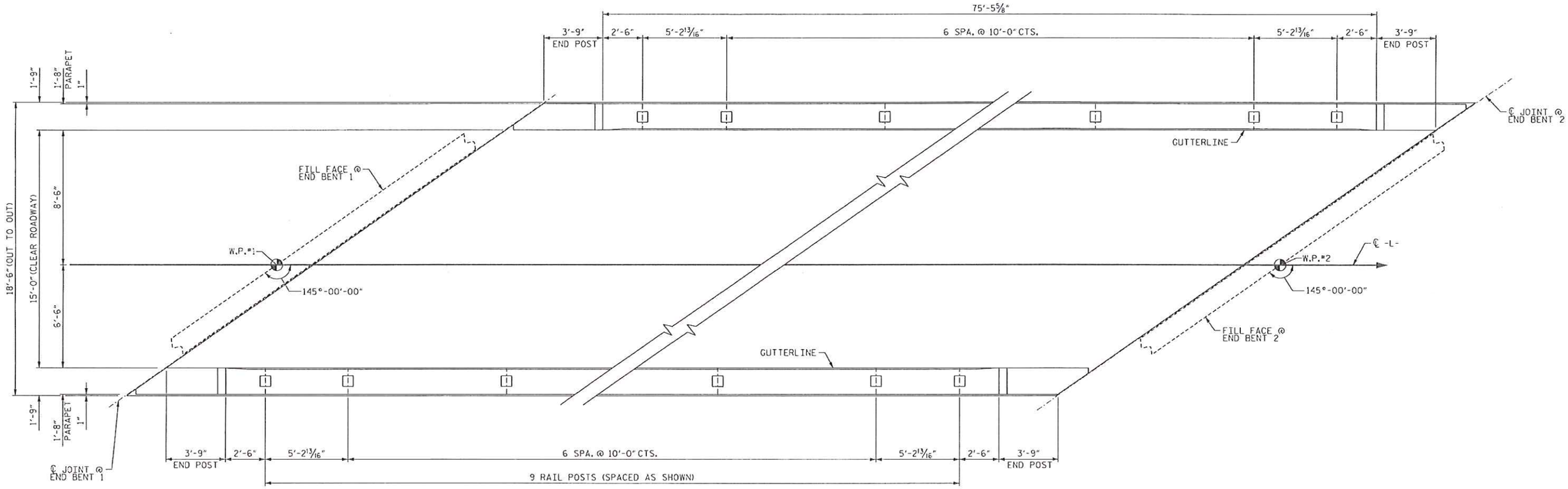

PLAN OF RAIL POST SPACINGS

RAIL POST DIMENSIONS TYPICAL EACH SIDE

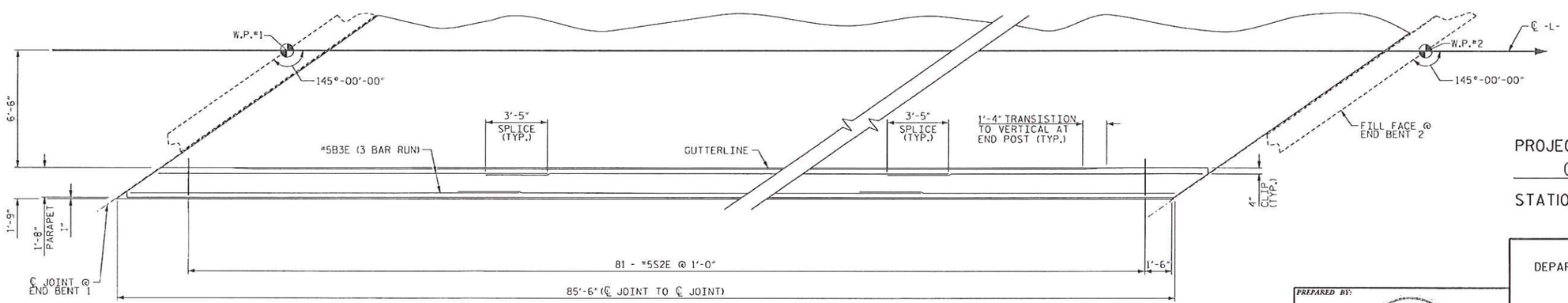

PLAN OF PARAPET

RIGHT SIDE SHOWN, LEFT SIDE SIMILAR

PROJECT NO. B-3457

GRAHAM COUNTY

STATION: 12+37.00 -L-

PREPARED BY:

NORTH CAROLINA PROFESSIONAL SEAL 22072 ENGINEER JOHN ARTHUR DILWORTH

5-30-13

ETHERILL ENGINEERING

559 Jones Franklin Rd. Suite 164
Raleigh, N.C. 27606
Bus. 919 851 6077
Fax. 919 851 8107
License F-0372

TRANSPORTATION PLANNING/DESIGN - BRIDGE/STRUCTURE DESIGN
CIVIL/SITE DESIGN - GIS/GPS - CONSTRUCTION OBSERVATION

STATE OF NORTH CAROLINA
DEPARTMENT OF TRANSPORTATION
RALEIGH

SUPERSTRUCTURE

RAIL POST SPACING & CONCRETE PARAPET

REVISIONS								SHEET NO.
NO.	BY:	DATE:	NO.	BY:	DATE:			S-12
1			3					TOTAL SHEETS
2			4					22

DRAWN BY : Z. PIATEK DATE : 2/12

CHECKED BY : T. DIFFEE DATE : 2/12

P:\2010\1012101_B-3457\Structures\DGN\B3457_STR_2BWR3_S-12.dgn
5/30/2013 12:52:07 PM

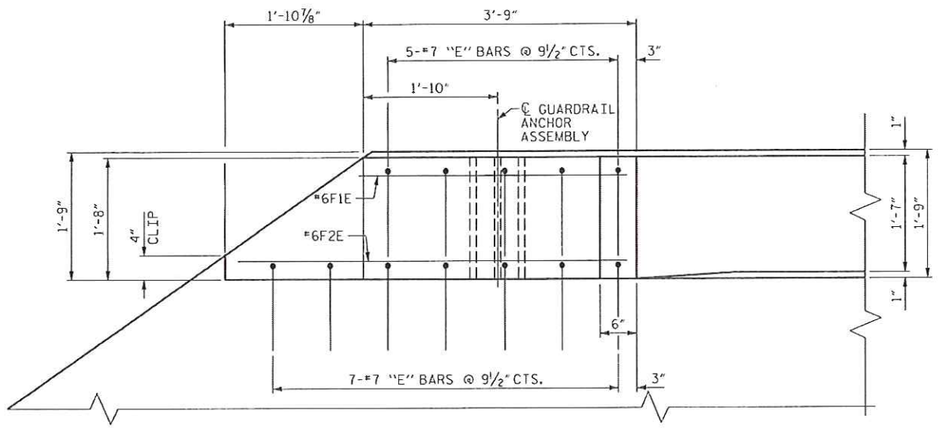

PLAN OF END POST

LEFT SIDE BEGINNING OF BRIDGE SHOWN
RIGHT SIDE END OF BRIDGE SIMILAR

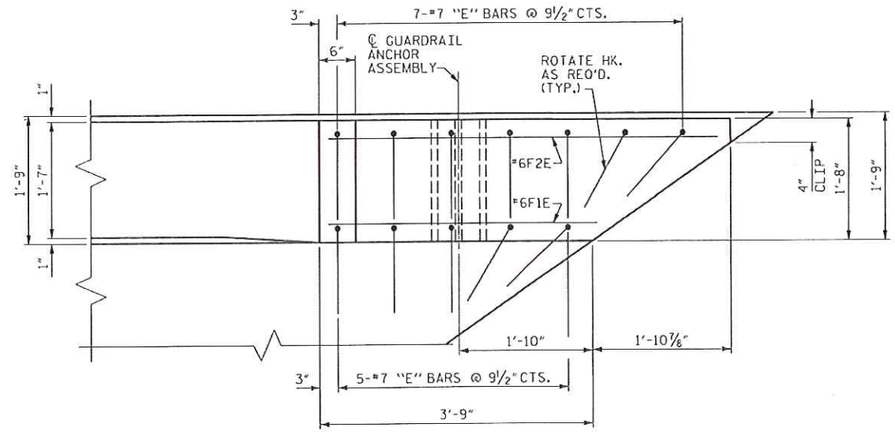

PLAN OF END POST

LEFT SIDE END OF BRIDGE SHOWN
RIGHT SIDE BEGINNING OF BRIDGE SIMILAR

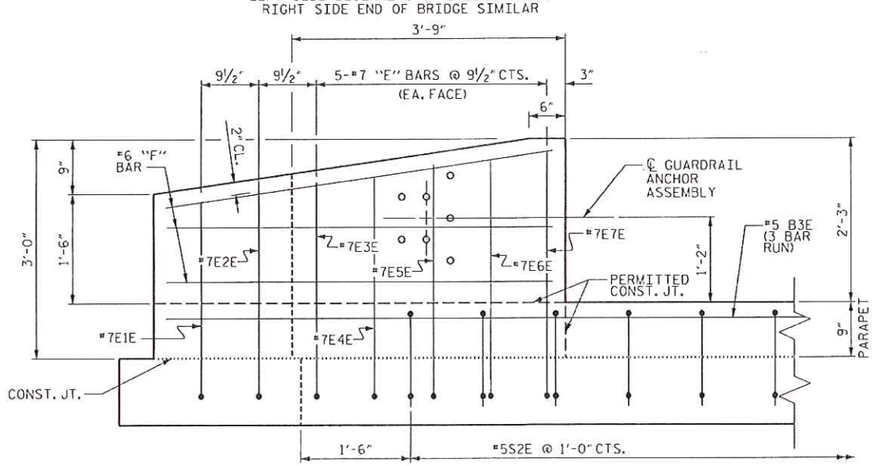

ELEVATION

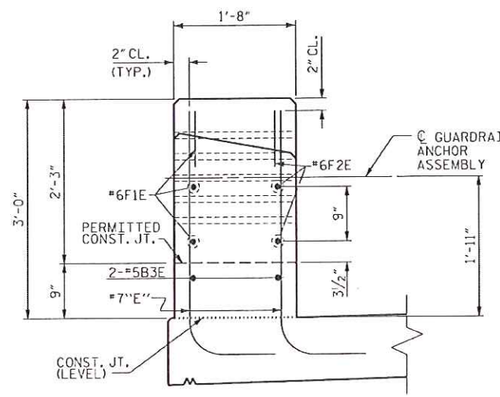

END VIEW

END POST DETAILS

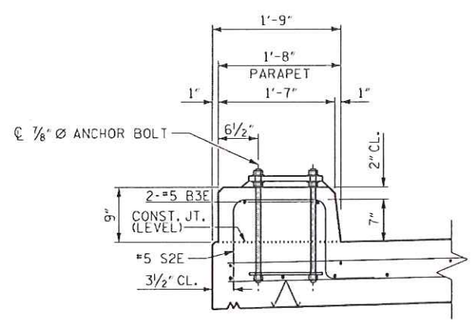

SECTION THRU PARAPET

"A" AND "B" BARS IN DECK MAY BE SHIFTED SLIGHTLY AS NECESSARY TO CLEAR ANCHOR ASSEMBLY

BILL OF MATERIAL

TWO PARAPETS AND FOUR END POSTS

BAR	NO.	SIZE	TYPE	LENGTH	WEIGHT
B3E	12	#5	STR	30'-8"	383
E1E	4	#7	1	3'-10"	31
E2E	4	#7	1	4'-0"	33
E3E	8	#7	1	4'-1"	67
E4E	8	#7	1	4'-2"	68
E5E	8	#7	1	4'-4"	71
E6E	8	#7	1	4'-5"	72
E7E	8	#7	1	4'-6"	74
F1E	12	#6	STR	3'-8"	66
F2E	12	#6	STR	5'-4"	96
S2E	162	#5	2	4'-5"	746

EPOXY COATED REINF. STEEL = 1707 LBS.

CLASS "AA" CONCRETE

CONCRETE PARAPET	7.2	C.Y.
END POSTS	3.2	C.Y.
TOTAL	10.4	C.Y.

CONCRETE PARAPET 170.70 L.F.

"E" DENOTES EPOXY COATED BARS.

BAR TYPES

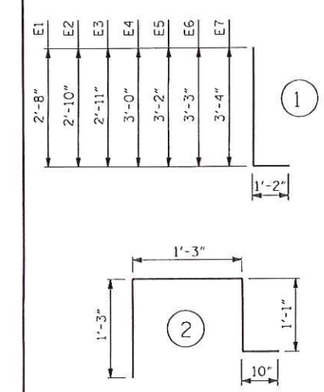

ALL BAR DIMENSIONS ARE OUT TO OUT

PROJECT NO. B-3457

GRAHAM COUNTY

STATION: 12+37.00 -L-

PREPARED BY:

NORTH CAROLINA PROFESSIONAL SEAL 22072 ENGINEER JOHN ARTHUR DILWORTH

5-30-13

WETHERILL ENGINEERING

559 Jones Franklin Rd. Suite 104
Raleigh, N.C. 27606
Tel. 919 851 8077
Fax. 919 851 8107
License F-0377

TRANSPORTATION PLANNING/DESIGN - BRIDGE/STRUCTURE DESIGN
CIVIL/SITE DESIGN - GIS/GPS - CONSTRUCTION OBSERVATION

STATE OF NORTH CAROLINA
DEPARTMENT OF TRANSPORTATION
RALEIGH

SUPERSTRUCTURE

CONCRETE PARAPET AND END POST DETAILS

REVISIONS								SHEET NO.
NO.	BY:	DATE:	NO.	BY:	DATE:			S-13
1			3					TOTAL SHEETS
2			4					22

DRAWN BY : Z. PIATEK DATE : 2/12
CHECKED BY : T. DIFFEE DATE : 2/12

P:\2010\1012101 B3457\Structures\DGN\B3457_STR_RAIL_S-13.dgn
5/30/2013 12:54:51 PM

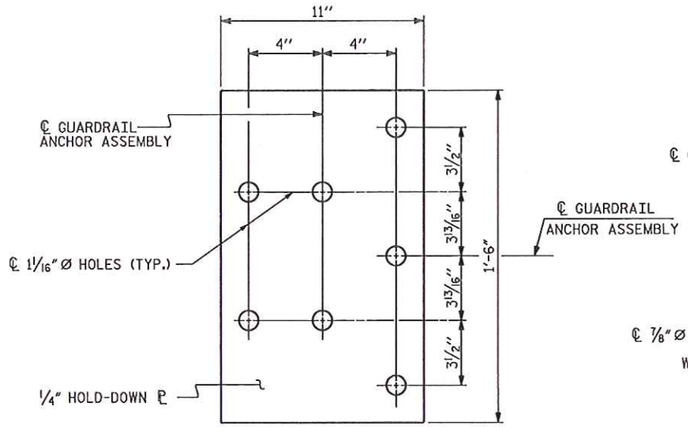

PLAN

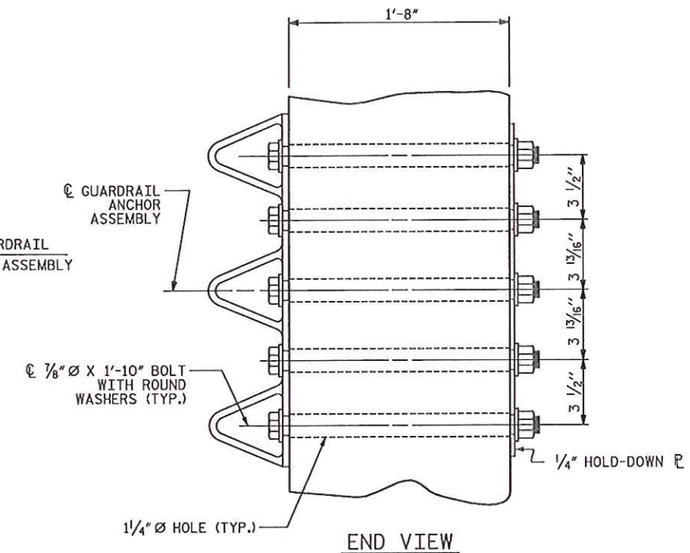

END VIEW

GUARDRAIL ANCHOR ASSEMBLY DETAILS

NOTES

THE GUARDRAIL ANCHOR ASSEMBLY SHALL CONSIST OF A 1/4" HOLD DOWN PLATE AND 7 - 7/8" Ø BOLTS WITH NUTS AND WASHERS.

THE HOLD-DOWN PLATE SHALL CONFORM TO AASHTO M270 GRADE 36. AFTER FABRICATION, THE HOLD-DOWN PLATE SHALL BE HOT-DIP GALVANIZED IN ACCORDANCE WITH AASHTO M111.

BOLTS SHALL CONFORM TO THE REQUIREMENTS OF ASTM A307 AND NUTS SHALL CONFORM TO THE REQUIREMENTS OF AASHTO M291. BOLTS, NUTS AND WASHERS SHALL BE GALVANIZED. AT THE CONTRACTOR'S OPTION, STAINLESS STEEL BOLTS, NUTS AND WASHERS MAY BE USED AS AN ALTERNATE FOR THE 7/8" Ø GALVANIZED BOLTS, NUTS AND WASHERS. THEY SHALL CONFORM TO OR EXCEED THE MECHANICAL REQUIREMENTS OF ASTM A307. THE USE OF THIS ALTERNATE SHALL BE APPROVED BY THE ENGINEER.

THE GUARDRAIL ANCHOR ASSEMBLY IS REQUIRED AT ALL POINTS WHERE APPROACH GUARDRAIL IS TO BE ATTACHED TO THE END OF THE PARAPET. FOR POINTS OF ATTACHMENT, SEE SKETCH.

AFTER INSTALLATION, THE EXPOSED THREAD OF THE BOLT SHALL BE BURRED WITH A SHARP POINTED TOOL.

THE COST OF THE GUARDRAIL ANCHOR ASSEMBLIES WITH BOLTS, NUTS AND WASHERS COMPLETE IN PLACE, SHALL BE INCLUDED IN THE VARIOUS PAY ITEMS.

THE VERTICAL REINFORCING BARS MAY BE SHIFTED SLIGHTLY IN THE END POST TO CLEAR ASSEMBLY BOLTS.

THE 1 1/4" Ø HOLES SHALL BE FORMED OR DRILLED WITH A CORE BIT. IMPACT TOOLS WILL NOT BE PERMITTED. ANY CONCRETE DAMAGED BY THIS WORK SHALL BE REPAIRED TO THE SATISFACTION OF THE ENGINEER.

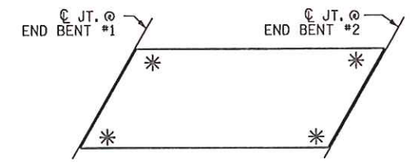

SKETCH SHOWING POINTS OF ATTACHMENT

✳ LOCATION OF GUARDRAIL ATTACHMENT

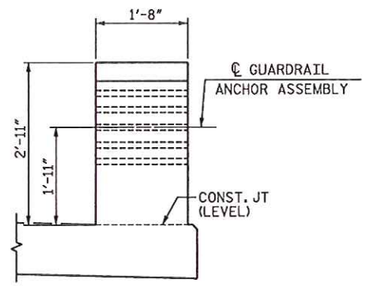

END VIEW
(SPECIAL TWO BAR METAL RAIL)

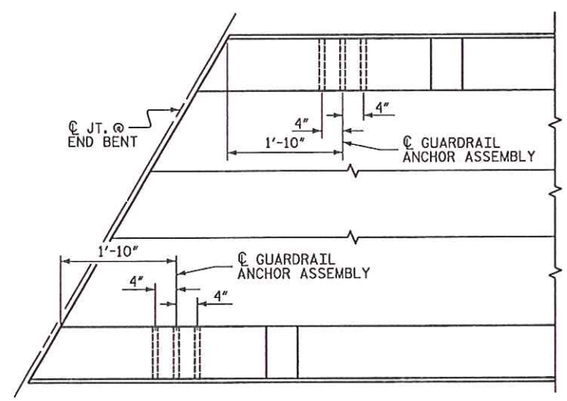

PLAN

LOCATION OF GUARDRAIL ANCHOR AT END POST

PROJECT NO. B-3457
GRAHAM COUNTY
STATION: 12+37.00 -L-

STATE OF NORTH CAROLINA
DEPARTMENT OF TRANSPORTATION
RALEIGH
STANDARD

GUARDRAIL ANCHORAGE DETAILS FOR METAL RAILS

PREPARED BY:
NORTH CAROLINA PROFESSIONAL SEAL 22072 ENGINEER JOHN ARTHUR DILWORTH
7-17-12
WETHERILL ENGINEERING
559 James Franklin Rd. Suite 164
Raleigh, N.C. 27606
Phone 919 851 8077
Fax. 919 851 8107
License: F-0377
TRANSPORTATION PLANNING/DESIGN - BRIDGE/STRUCTURE DESIGN
ON-SITE DESIGN - GRADES - CONSTRUCTION INSPECTION

REVISIONS						
NO.	BY:	DATE:	NO.	BY:	DATE:	
1			3			
2			4			

SHEET NO. S-14
TOTAL SHEETS 22

STD. NO. GRA3

ASSEMBLED BY : Z. PIATEK		DATE : 2/12	
CHECKED BY : T. DIFFEE		DATE : 2/12	
DRAWN BY : MAA 5/10	ADDED 5/6/10		
CHECKED BY : GM 5/10	REV. 10/1/11	MAA/GM	
	REV. 12/5/11	MAA/GM	

REINFORCING BAR SCHEDULE

BAR	NO.	SIZE	TYPE	LENGTH	WEIGHT	BAR	NO.	SIZE	TYPE	LENGTH	WEIGHT	BAR	NO.	SIZE	TYPE	LENGTH	WEIGHT
A1E	118	#5	STR	18'-2"	2236	A139E	2	#5	STR	4'-7"	10	A230	2	#5	STR	7'-9"	16
A2	118	#5	STR	18'-2"	2236	A140E	2	#5	STR	4'-3"	9	A231	2	#5	STR	7'-5"	15
						A141E	2	#5	STR	3'-11"	8	A232	2	#5	STR	7'-0"	15
A101E	2	#5	STR	17'-11"	37	A142E	2	#5	STR	3'-6"	7	A233	2	#5	STR	6'-8"	14
A102E	2	#5	STR	17'-6"	37	A143E	2	#5	STR	3'-2"	7	A234	2	#5	STR	6'-4"	13
A103E	2	#5	STR	17'-2"	36	A144E	2	#5	STR	2'-10"	6	A235	2	#5	STR	6'-0"	13
A104E	2	#5	STR	16'-10"	35	A145E	2	#5	STR	2'-6"	5	A236	2	#5	STR	5'-8"	12
A105E	2	#5	STR	16'-6"	34	A146E	2	#5	STR	2'-2"	5	A237	2	#5	STR	5'-3"	11
A106E	2	#5	STR	16'-2"	34	A147E	2	#5	STR	1'-9"	4	A238	2	#5	STR	4'-11"	10
A107E	2	#5	STR	15'-9"	33	A148E	2	#5	STR	1'-5"	3	A239	2	#5	STR	4'-7"	10
A108E	2	#5	STR	15'-5"	32	A149E	2	#5	STR	1'-1"	2	A240	2	#5	STR	4'-3"	9
A109E	2	#5	STR	15'-1"	31							A241	2	#5	STR	3'-11"	8
A110E	2	#5	STR	14'-9"	31	A201	2	#5	STR	17'-11"	37	A242	2	#5	STR	3'-6"	7
A111E	2	#5	STR	14'-5"	30	A202	2	#5	STR	17'-6"	37	A243	2	#5	STR	3'-2"	7
A112E	2	#5	STR	14'-0"	29	A203	2	#5	STR	17'-2"	36	A244	2	#5	STR	2'-10"	6
A113E	2	#5	STR	13'-8"	29	A204	2	#5	STR	16'-10"	35	A245	2	#5	STR	2'-6"	5
A114E	2	#5	STR	13'-4"	28	A205	2	#5	STR	16'-6"	34	A246	2	#5	STR	2'-2"	5
A115E	2	#5	STR	13'-0"	27	A206	2	#5	STR	16'-2"	34	A247	2	#5	STR	1'-9"	4
A116E	2	#5	STR	12'-8"	26	A207	2	#5	STR	15'-9"	33	A248	2	#5	STR	1'-5"	3
A117E	2	#5	STR	12'-3"	26	A208	2	#5	STR	15'-5"	32	A249	2	#5	STR	1'-1"	2
A118E	2	#5	STR	11'-11"	25	A209	2	#5	STR	15'-1"	31						
A119E	2	#5	STR	11'-7"	24	A210	2	#5	STR	14'-9"	31	B1E	39	#4	STR	29'-8"	773
A120E	2	#5	STR	11'-3"	23	A211	2	#5	STR	14'-5"	30	B2	44	#5	STR	43'-6"	1996
A121E	2	#5	STR	10'-11"	23	A212	2	#5	STR	14'-0"	29						
A122E	2	#5	STR	10'-6"	22	A213	2	#5	STR	13'-8"	29	G1E	2	#5	STR	31'-8"	66
A123E	2	#5	STR	10'-2"	21	A214	2	#5	STR	13'-4"	28						
A124E	2	#5	STR	9'-10"	21	A215	2	#5	STR	13'-0"	27	K1E	12	#5	1	12'-6	156
A125E	2	#5	STR	9'-6"	20	A216	2	#5	STR	12'-8"	26	K2E	6	#5	2	15'-0"	94
A126E	2	#5	STR	9'-2"	19	A217	2	#5	STR	12'-3"	26						
A127E	2	#5	STR	8'-9"	18	A218	2	#5	STR	11'-11"	25	S1E	24	#5	3	4'-5"	71
A128E	2	#5	STR	8'-5"	18	A219	2	#5	STR	11'-7"	24						
A129E	2	#5	STR	8'-1"	17	A220	2	#5	STR	11'-3"	23						
A130E	2	#5	STR	7'-9"	16	A221	2	#5	STR	10'-11"	23						
A131E	2	#5	STR	7'-5"	15	A222	2	#5	STR	10'-6"	22						
A132E	2	#5	STR	7'-0"	15	A223	2	#5	STR	10'-2"	21						
A133E	2	#5	STR	6'-8"	14	A224	2	#5	STR	9'-10"	21						
A134E	2	#5	STR	6'-4"	13	A225	2	#5	STR	9'-6"	20						
A135E	2	#5	STR	6'-0"	13	A226	2	#5	STR	9'-2"	19						
A136E	2	#5	STR	5'-8"	12	A227	2	#5	STR	8'-9"	18						
A137E	2	#5	STR	5'-3"	11	A228	2	#5	STR	8'-5"	18						
A138E	2	#5	STR	4'-11"	10	A229	2	#5	STR	8'-1"	17						

'E' DENOTES EPOXY COATED REINFORCING STEEL

BAR TYPES

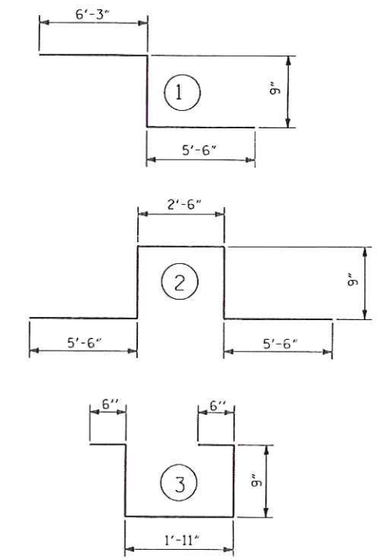

ALL BAR DIMENSIONS ARE OUT TO OUT

SUPERSTRUCTURE REINFORCING STEEL LENGTHS ARE BASED ON THE FOLLOWING MINIMUM SPLICE LENGTHS

BAR SIZE	SUPERSTRUCTURE EXCEPT APPROACH SLABS, PARAPET, AND BARRIER RAIL		APPROACH SLABS		PARAPET AND BARRIER RAIL
	EPOXY COATED	UNCOATED	EPOXY COATED	UNCOATED	
#4	2'-0"	1'-9"	2'-0"	1'-9"	2'-9"
#5	2'-6"	2'-2"	2'-6"	2'-2"	3'-5"
#6	3'-0"	2'-7"	3'-10"	2'-7"	4'-4"
#7	5'-3"	3'-6"			
#8	6'-10"	4'-7"			

SUPERSTRUCTURE BILL OF MATERIAL

	CLASS AA CONCRETE	REINFORCING STEEL	EPOXY COATED REINFORCING STEEL
	(CU.YDS.)	(LBS.)	(LBS.)
SPAN "A"	44.2	5203	4367
TOTALS**	44.2	5203	4367

**QUANTITIES FOR PARAPET NOT INCLUDED

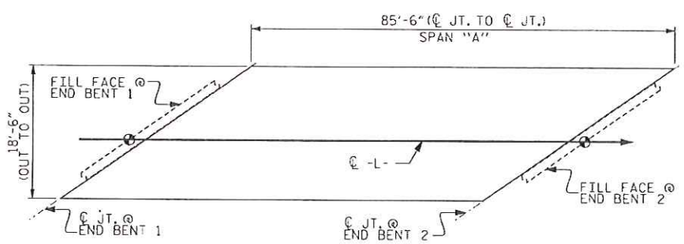

LAYOUT FOR COMPUTING AREA OF REINFORCED CONCRETE DECK SLAB
(SQ. FT. = 1582)

GROOVING BRIDGE FLOORS

APPROACH SLABS	N/A SQ.FT.
BRIDGE DECK	1,021 SQ.FT.
TOTAL	1,021 SQ.FT.

PROJECT NO. B-3457
GRAHAM COUNTY
STATION: 12+37.00 -L-

STD. NO. BOM1

PREPARED BY:

NORTH CAROLINA PROFESSIONAL SEAL 22072 ENGINEER JOHN ARTHUR DILWORTH
5-30-13

WETHERILL ENGINEERING
559 James Brandon Rd Suite 164
Raleigh, N.C. 27606
Bus. 919 851 8077
Fax 919 851 8107
License F-0377
TRANSPORTATION PLANNING/DESIGN - BRIDGE/STRUCTURE DESIGN
CIVIL/SITE DESIGN - GS/OPS - CONSTRUCTION INSPECTION

STATE OF NORTH CAROLINA
DEPARTMENT OF TRANSPORTATION
RALEIGH
STANDARD

SUPERSTRUCTURE BILL OF MATERIAL

REVISIONS						SHEET NO.
NO.	BY:	DATE:	NO.	BY:	DATE:	S-15
1			3			TOTAL SHEETS
2			4			22

ASSEMBLED BY : Z. PIATEK		DATE : 2-12	
CHECKED BY : T. DIFFEE		DATE : 2-12	
DRAWN BY : JMB 5/87	REV. 6/1/94	EEM/GRP	
CHECKED BY : SJD 9/87	REV. 8/16/99	RAW/LES	
	REV. 5/1/06	TLA/GW	

P:\2010\1012101 B-3457\Structures\DGN\B3457_STR_BOM_S-15.dgn
5/30/2013 12:56:32 PM

NOTES:

STIRRUPS IN CAP MAY BE SHIFTED AS NECESSARY TO CLEAR ANCHOR BOLTS.

BACKWALL SHALL BE PLACED BEFORE APPLYING THE EPOXY PROTECTIVE COATING.

THE TOP SURFACE AREAS OF THE END BENT CAP SHALL BE CURED IN ACCORDANCE WITH THE STANDARD SPECIFICATIONS EXCEPT THE MEMBRANE CURING COMPOUND METHOD SHALL NOT BE USED.

THE TOP SURFACE OF THE CAP EXCEPT THE BRIDGE SEAT BUILDUPS SHALL BE SLOPED TRANSVERSELY FROM THE FILL FACE TO THE BACK FACE AT THE RATE OF 2%.

FOR SECTION A-A SEE SHEET 3 OF 3.

FOR MISC. DETAILS SEE SHEET 3 OF 3.

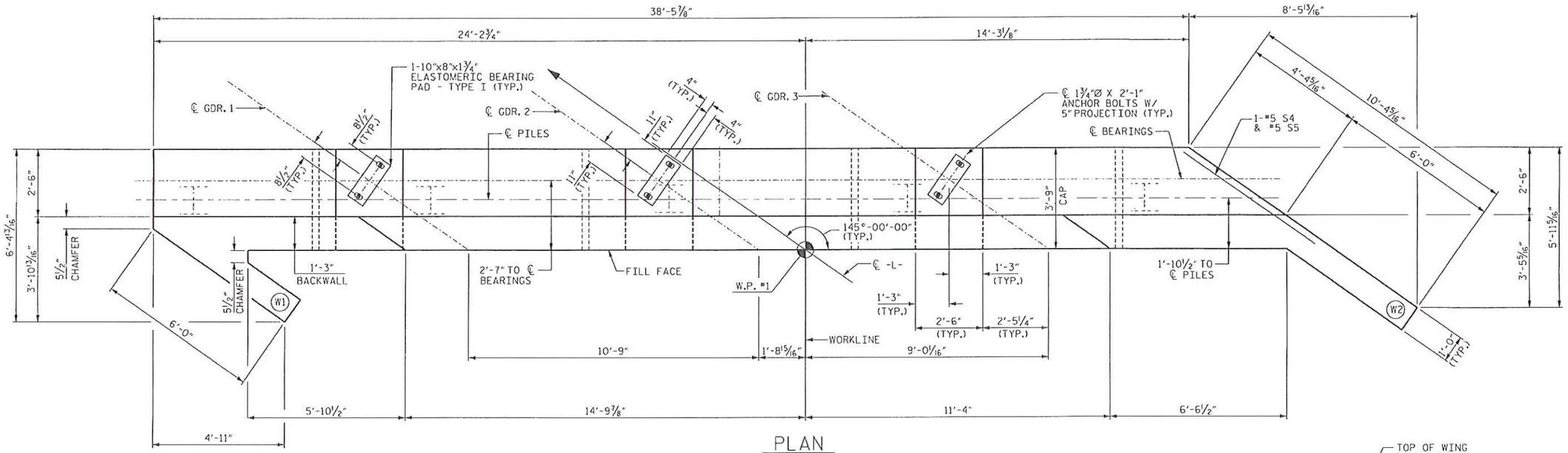

PLAN

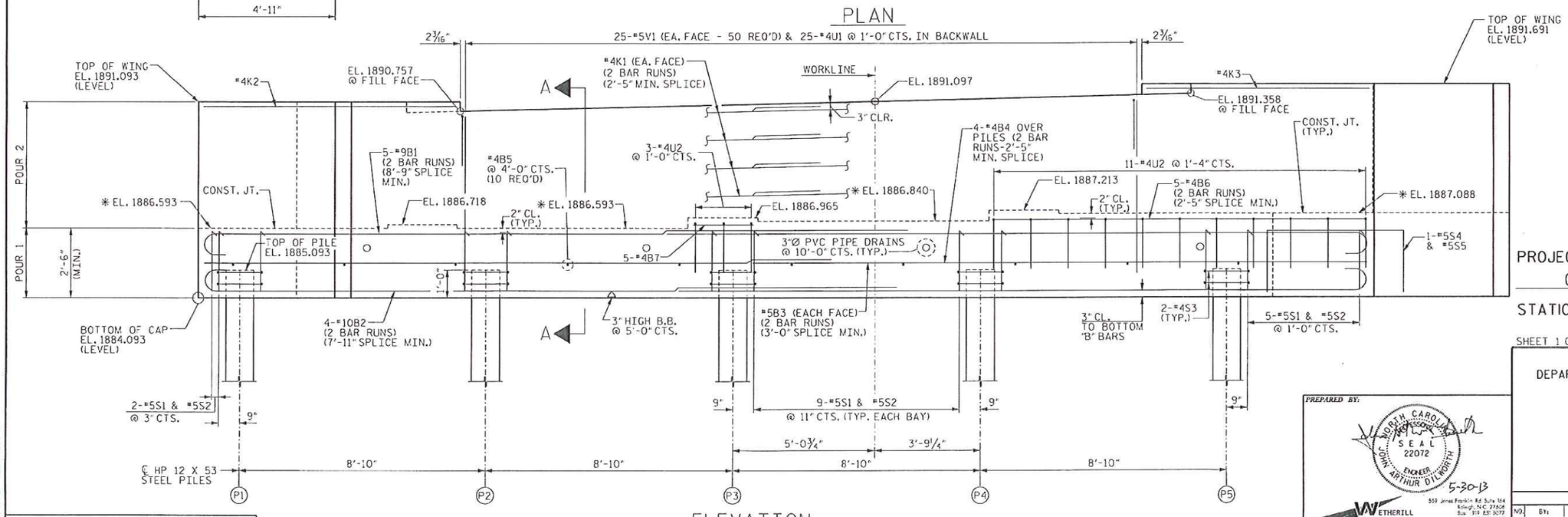

ELEVATION

* FOR LOCATION OF ELEVATIONS BETWEEN BRIDGE SEAT BUILD-UPS, SEE "SECTION A-A" SHEET 3 OF 3.

PROJECT NO. B-3457

GRAHAM COUNTY

STATION: 12+37.00 -L-

SHEET 1 OF 3

STATE OF NORTH CAROLINA
DEPARTMENT OF TRANSPORTATION
RALEIGH

SUBSTRUCTURE

END BENT 1

PREPARED BY:

NORTH CAROLINA PROFESSIONAL SEAL 22072 ENGINEER JOHN ARTHUR DILWORTH 5-30-13

WETHERILL ENGINEERING
559 James Franklin Rd Suite 104
Raleigh, N.C. 27606
Bus 919 851 8077
Fax 919 851 8107
License F-0373

TRANSPORTATION PLANNING/DESIGN - BRIDGE/STRUCTURE DESIGN
ON/SITE DESIGN - GIS/CADD - CONSTRUCTION OBSERVATION

REVISIONS								SHEET NO.
NO.	BY:	DATE:	NO.	BY:	DATE:			S-16
1			3					TOTAL SHEETS
2			4					22

DRAWN BY : G. WILSON DATE : 9/11
CHECKED BY : J. DILWORTH DATE : 2/12

P:\2010\10121\01_B-3457\Structures\DGN\B3457_STR_EB1-1_S 16.dgn
5/30/2013 1:01:20 PM

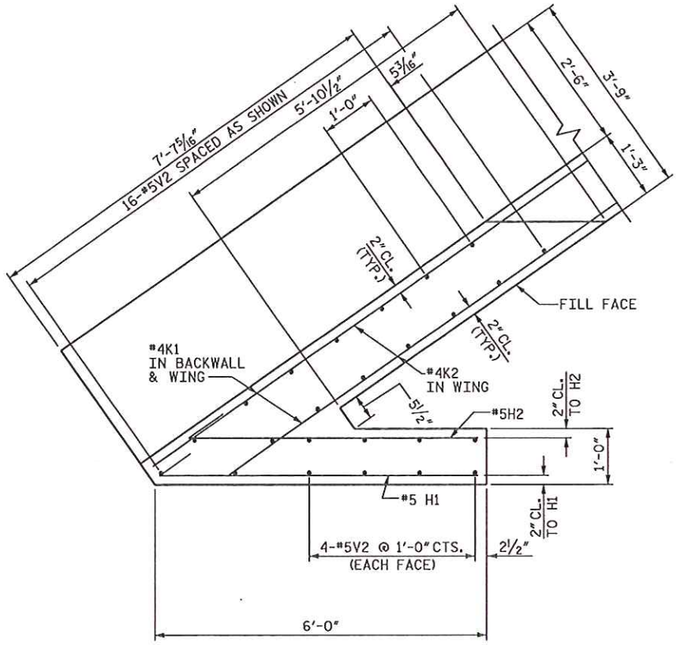

PLAN OF WING (W1)

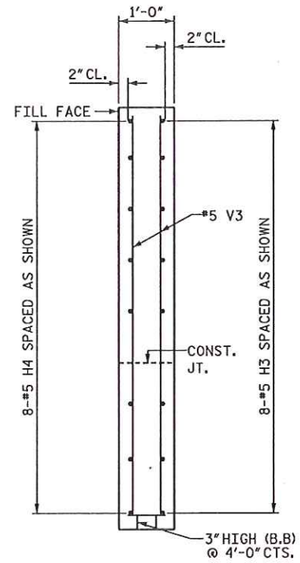

SECTION C-C

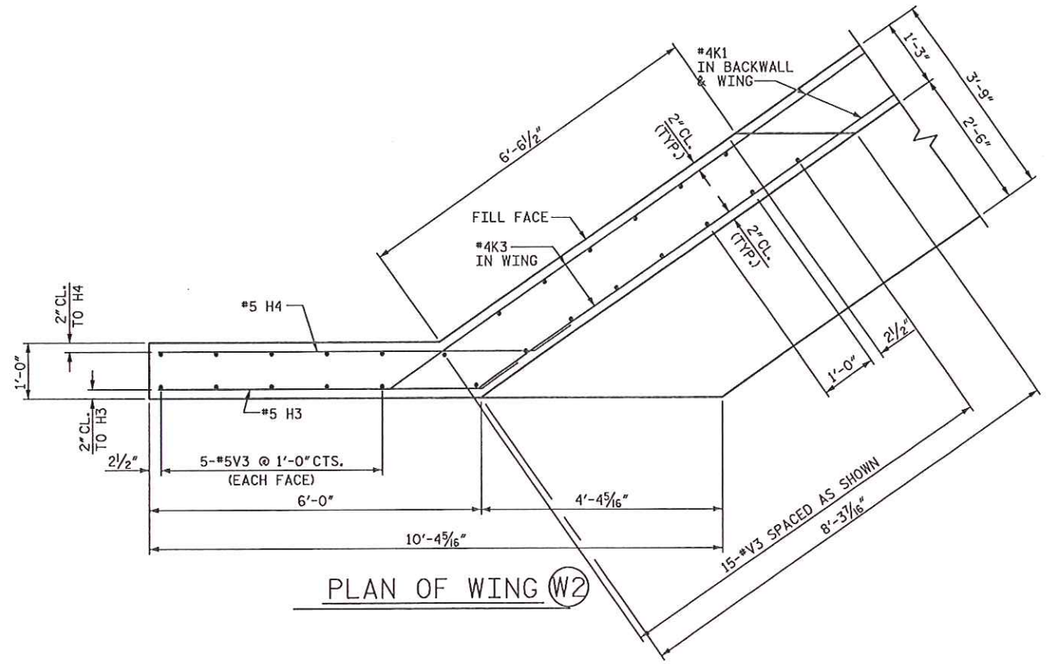

PLAN OF WING (W2)

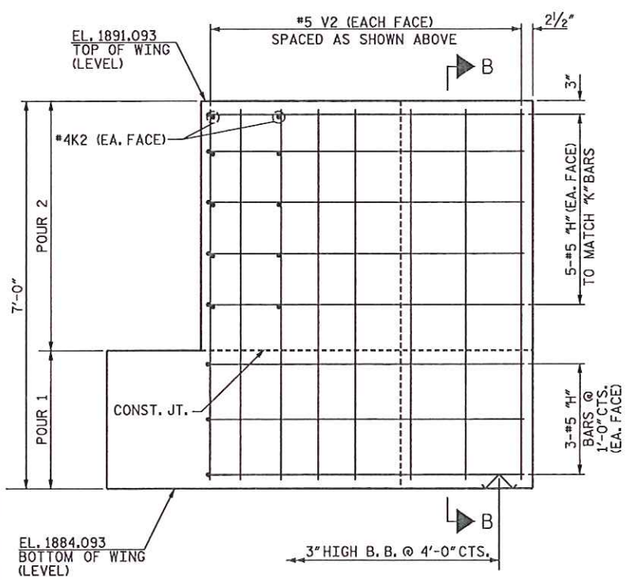

ELEVATION OF WING (W1)

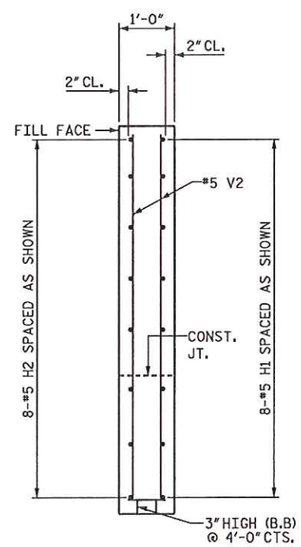

SECTION B-B

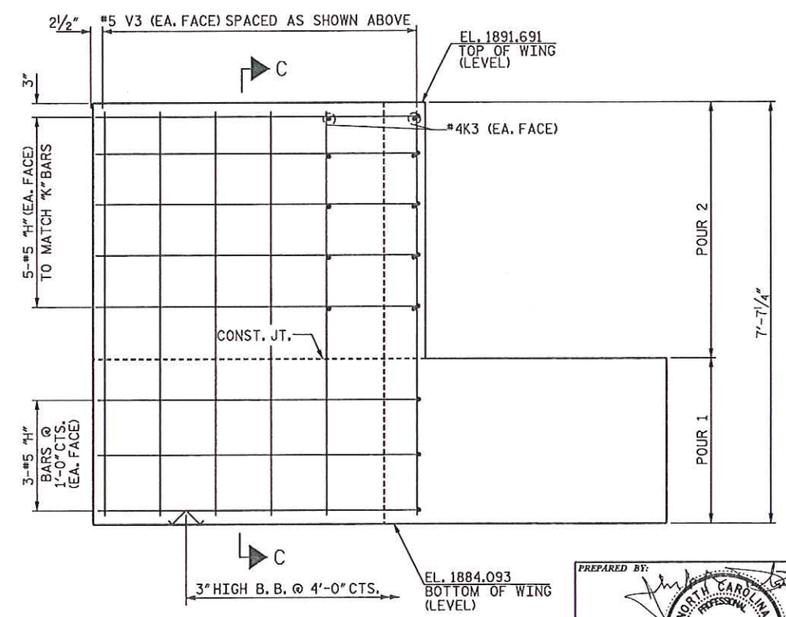

ELEVATION OF WING (W2)

PROJECT NO. B-3457
GRAHAM COUNTY
STATION: 12+37.00 -L-

SHEET 2 OF 3

STATE OF NORTH CAROLINA
DEPARTMENT OF TRANSPORTATION
RALEIGH

SUBSTRUCTURE
END BENT 1

PREPARED BY:
NORTH CAROLINA PROFESSIONAL SEAL 22072 ENGINEER JOHN ARTHUR DILWORTH
7-17-12

WETHERILL ENGINEERING
559 James Franklin Rd. Suite 164
Raleigh, N.C. 27606
Bus. 919 851 8077
Fax. 919 851 8107
License: F-0377
TRANSPORTATION PLANNING/DESIGN - BRIDGE/STRUCTURE DESIGN
CAD/SITE DESIGN - GPS/GPS - CONSTRUCTION OBSERVATION

REVISIONS						SHEET NO.
NO.	BY:	DATE:	NO.	BY:	DATE:	S-17
1			3			TOTAL SHEETS
2			4			22

DRAWN BY : G. WILSON DATE : 2/12
CHECKED BY : J. DILWORTH DATE : 2/12

P:\2010\1012101 B-3457\Structures\DBN\B3457_STR_EB1-2_S-17.dgn
7/17/2012 2:22:57 PM

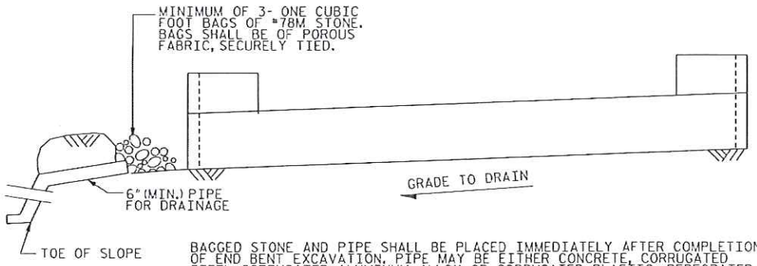

BAGGED STONE AND PIPE SHALL BE PLACED IMMEDIATELY AFTER COMPLETION OF END BENT EXCAVATION. PIPE MAY BE EITHER CONCRETE, CORRUGATED STEEL, CORRUGATED ALUMINUM ALLOY, OR CORRUGATED PLASTIC. PERFORATED PIPE WILL NOT BE ALLOWED.

BAGGED STONE SHALL REMAIN IN PLACE UNTIL THE ENGINEER DIRECTS THAT IT BE REMOVED. THE CONTRACTOR SHALL REMOVE AND DISPOSE OF SILT ACCUMULATIONS AT BAGGED STONE WHEN SO DIRECTED BY THE ENGINEER. BAGS SHALL BE REMOVED AND REPLACED WHENEVER THE ENGINEER DETERMINES THAT THEY HAVE DETERIORATED AND LOST THEIR EFFECTIVENESS.

NO SEPARATE PAYMENT WILL BE MADE FOR THIS WORK AND THE ENTIRE COST OF THIS WORK SHALL BE INCLUDED IN THE UNIT CONTRACT PRICE BID FOR THE SEVERAL PAY ITEMS.

TEMPORARY DRAINAGE AT END BENT

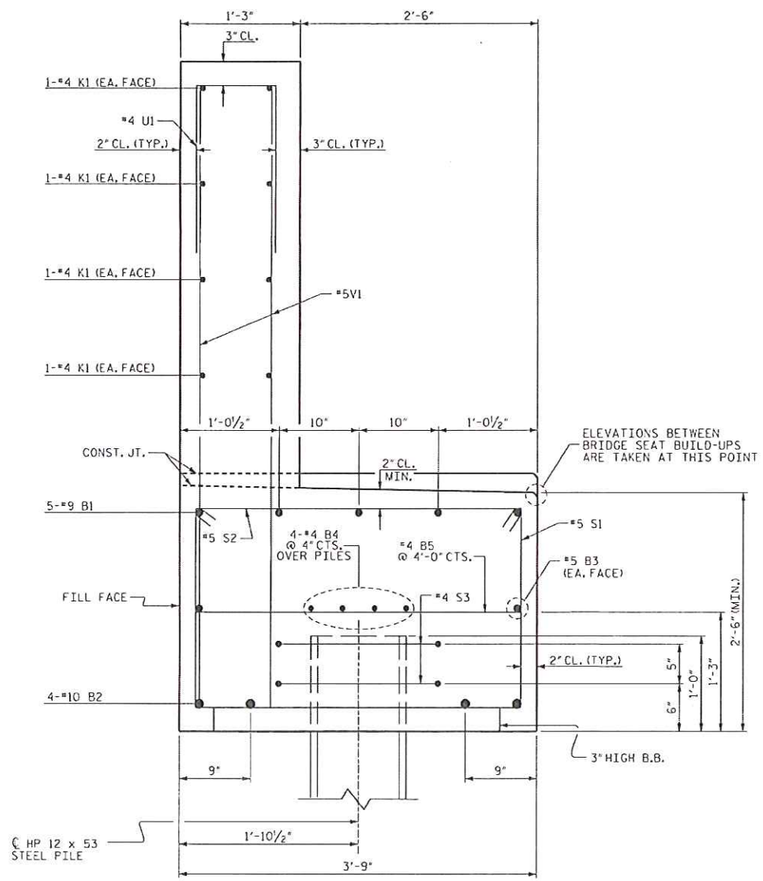

SECTION A-A

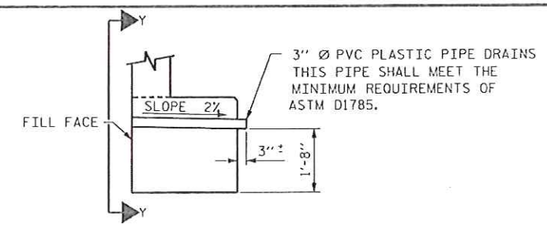

SECTION THRU CAP

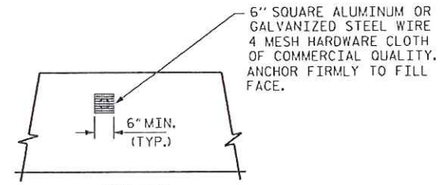

VIEW Y-Y

NOTE: NO SEPARATE PAYMENT WILL BE MADE FOR FURNISHING AND INSTALLING THE PVC PLASTIC PIPE DRAINS, HARDWARE CLOTH AND FASTENERS. THE ENTIRE COST OF THIS WORK SHALL BE INCLUDED IN THE UNIT CONTRACT PRICE BID FOR THE SEVERAL PAY ITEMS.

PIPE DRAIN DETAILS

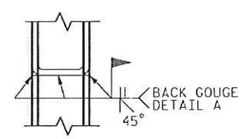

*PILE VERTICAL

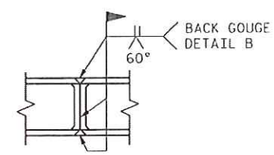

*PILE HORIZONTAL OR VERTICAL

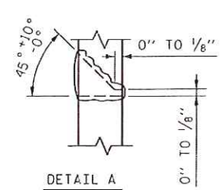

DETAIL A

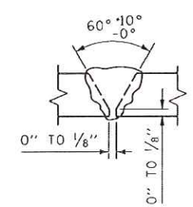

DETAIL B

*POSITION OF PILE DURING WELDING.

PILE SPLICE DETAILS

BAR TYPES

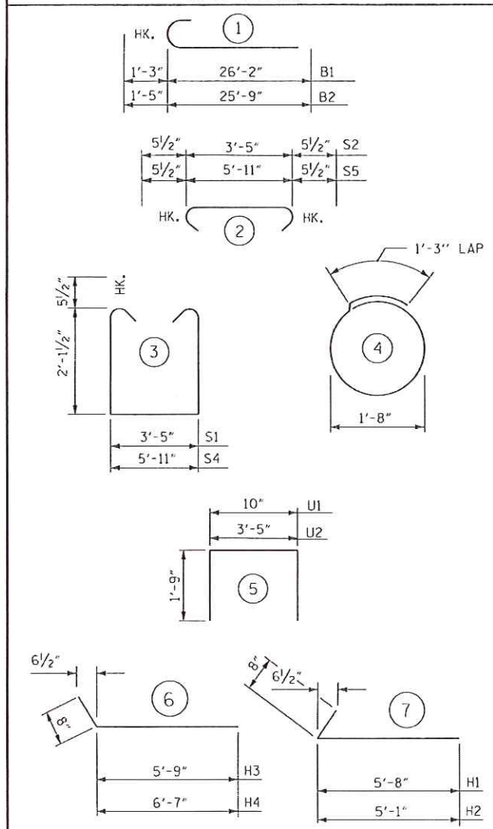

(ALL BAR DIMENSIONS ARE OUT TO OUT.)

BILL OF MATERIAL

END BENT 1

BAR	NO.	SIZE	TYPE	LENGTH	WEIGHT
B1	10	#9	1	27'-5"	932
B2	8	#10	1	27'-2"	935
B3	4	#5	STR	23'-4"	97
B4	8	#4	STR	23'-0"	123
B5	10	#4	STR	3'-5"	23
B6	10	#4	STR	8'-10"	59
B7	5	#4	STR	2'-2"	7
H1	8	#5	7	6'-4"	53
H2	8	#5	7	5'-9"	48
H3	8	#5	6	6'-5"	54
H4	8	#5	6	7'-3"	60
K1	16	#4	STR	22'-5"	240
K2	2	#4	STR	7'-4"	10
K3	2	#4	STR	7'-8"	10
S1	43	#5	3	8'-7"	385
S2	43	#5	2	4'-4"	194
S3	10	#4	4	6'-6"	43
S4	1	#5	3	11'-1"	12
S5	1	#5	2	6'-10"	7
U1	25	#4	5	4'-4"	72
U2	14	#4	5	6'-11"	65
V1	50	#5	STR	6'-3"	326
V2	24	#5	STR	6'-8"	167
V3	25	#5	STR	7'-3"	189

REINFORCING STEEL = 4,111 LBS.

CLASS A CONCRETE
POUR 1 CAP & LOWER PART OF WINGS C.Y. 16.6
POUR 2 BACKWALL AND UPPER PART OF WINGS C.Y. 10.8
TOTAL C.Y. 27.4

HP 12 X 53 STEEL PILES NO. = 5 (LIN. FT.)	50.0
PILE EXCAVATION IN SOIL (LIN. FT.)	25.0
PILE EXCAVATION NOT IN SOIL (LIN. FT.)	25.0

PROJECT NO. B-3457
GRAHAM COUNTY
STATION: 12+37.00 -L-

SHEET 3 OF 3

STATE OF NORTH CAROLINA
DEPARTMENT OF TRANSPORTATION
RALEIGH

SUBSTRUCTURE
END BENT 1

PREPARED BY:
NORTH CAROLINA PROFESSIONAL SEAL 22072 ENGINEER JOHN ARTHUR DILWORTH
5-30-13
WETHERILL ENGINEERING
859 Jones Franklin Rd. Suite 154
Raleigh, N.C. 27606
Tel. 919 851 8077
Fax. 919 851 8017
License F-0377
TRANSPORTATION PLANNING/DESIGN - BRIDGE/STRUCTURE DESIGN
CAD/SITE DESIGN - GIS/GPS - CONSTRUCTION OBSERVATION

REVISIONS								SHEET NO.
NO.	BY:	DATE:	NO.	BY:	DATE:			S-18
1			3					TOTAL SHEETS
2			4					22

DRAWN BY : Z. PIATEK DATE : 3/12
CHECKED BY : J. DILWORTH DATE : 3/12

P:\2010\1012101_B-3457\Structures\DGN\B3457_STR_EB1-3_S-18.dgn
5/30/2013 1:07:49 PM

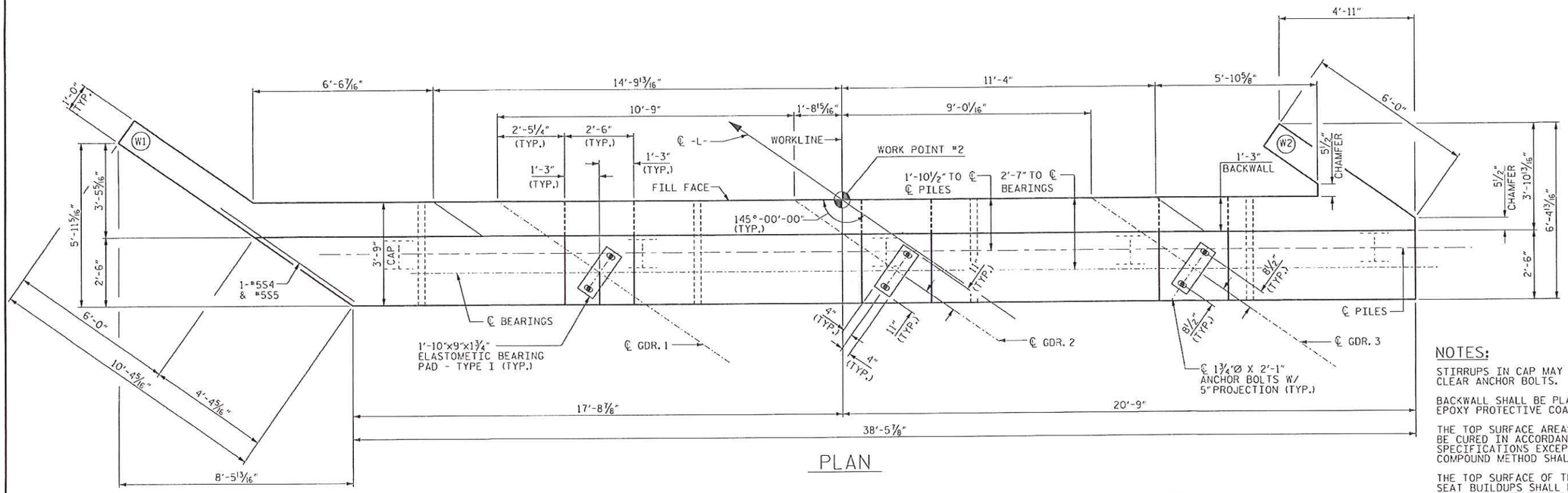

PLAN

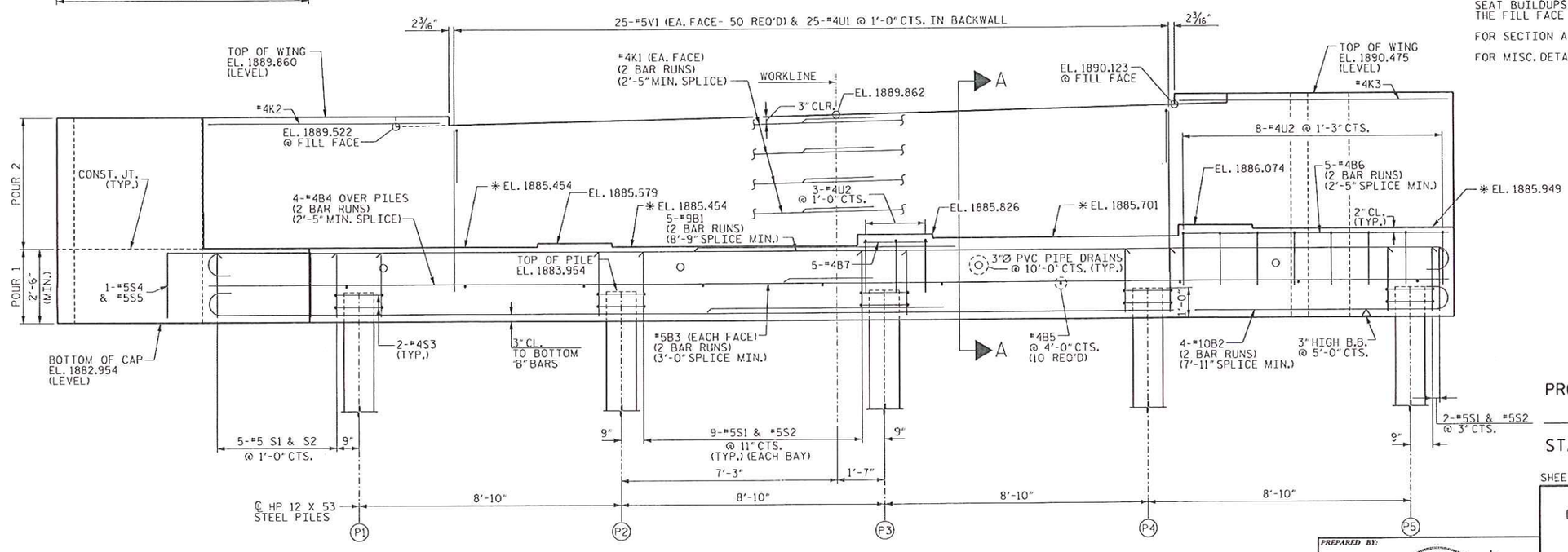

ELEVATION

*FOR LOCATION OF ELEVATIONS BETWEEN BRIDGE SEAT BUILD-UPS, SEE "SECTION A-A" SHEET 3 OF 3.

NOTES:

STIRRUPS IN CAP MAY BE SHIFTED AS NECESSARY TO CLEAR ANCHOR BOLTS.

BACKWALL SHALL BE PLACED BEFORE APPLYING THE EPOXY PROTECTIVE COATING.

THE TOP SURFACE AREAS OF THE END BENT CAP SHALL BE CURED IN ACCORDANCE WITH THE STANDARD SPECIFICATIONS EXCEPT THE MEMBRANE CURING COMPOUND METHOD SHALL NOT BE USED.

THE TOP SURFACE OF THE CAP EXCEPT THE BRIDGE SEAT BUILDUPS SHALL BE SLOPED TRANSVERSELY FROM THE FILL FACE TO THE BACK FACE AT THE RATE OF 2%.

FOR SECTION A-A SEE SHEET 3 OF 3.

FOR MISC. DETAILS SEE SHEET 3 OF 3.

PROJECT NO. B-3457

GRAHAM COUNTY

STATION: 12+37.00 -L-

SHEET 1 OF 3

STATE OF NORTH CAROLINA
DEPARTMENT OF TRANSPORTATION
RALEIGH

SUBSTRUCTURE
END BENT 2

PREPARED BY:

N.C. GARDENA ENGINEERING SEAL 22072 JOHN ARTHUR DILWORTH

5-2013

WETHERILL ENGINEERING
559 Jones Franklin Rd. Suite 164
Raleigh, N.C. 27606
Bus. 919 851 8079
Fax. 919 851 8097
License F-0377

TRANSPORTATION PLANNING/DESIGN - BRIDGE/STRUCTURE DESIGN
CADD/GIS DESIGN - GS/GPS - CONSTRUCTION OBSERVATION

REVISIONS								SHEET NO.
NO.	BY:	DATE:	NO.	BY:	DATE:			S-19
1			3					TOTAL SHEETS
2			4					22

DRAWN BY : G. WILSON DATE : 9/11
CHECKED BY : J. DILWORTH DATE : 2/12

P:\2010\1012101 B-3457\Structures\DGN\B3457_STR_EB2-1_S-19.dgn
5/30/2013 1:12:22 PM

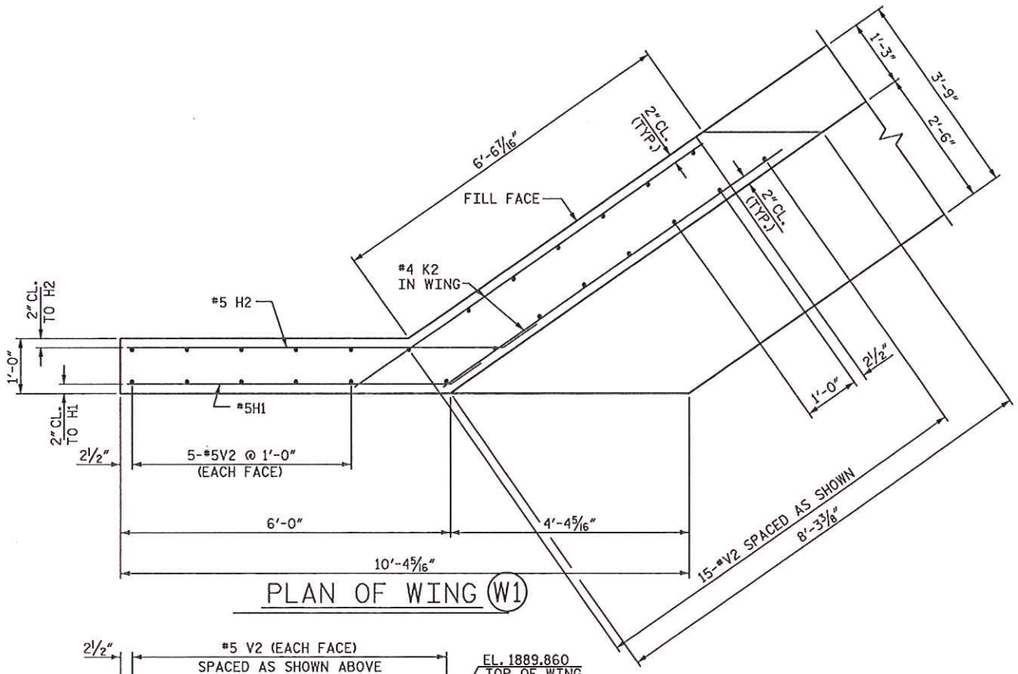

PLAN OF WING (W1)

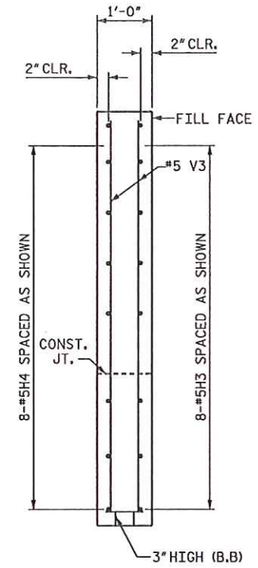

SECTION C-C

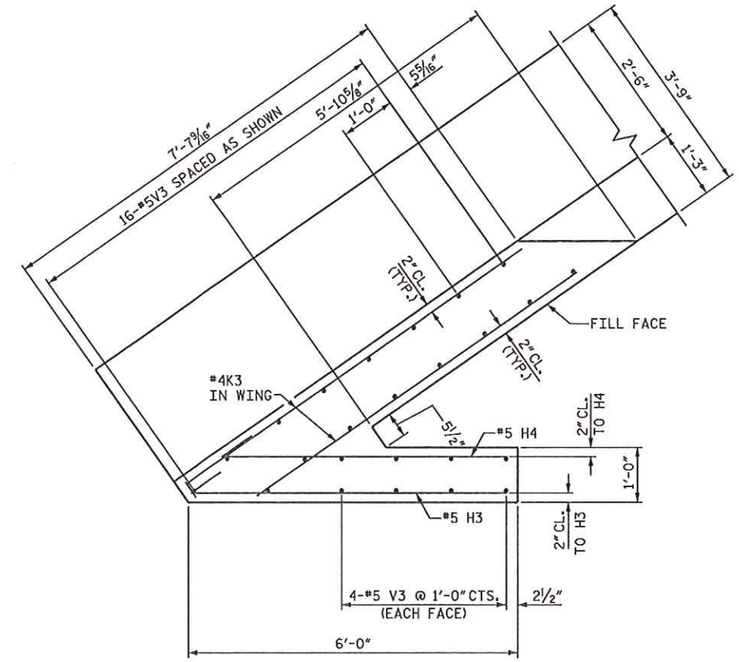

PLAN OF WING (W2)

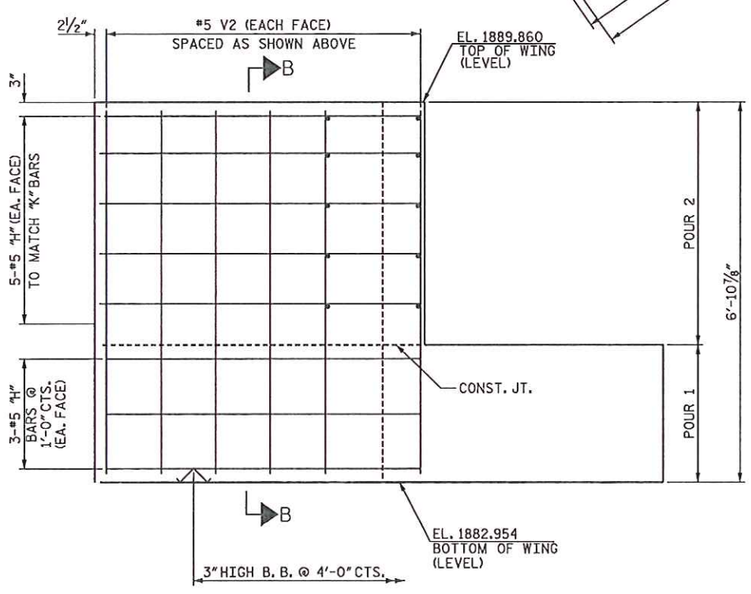

ELEVATION OF WING (W1)

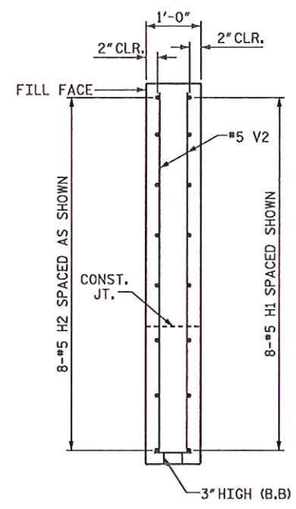

SECTION B-B

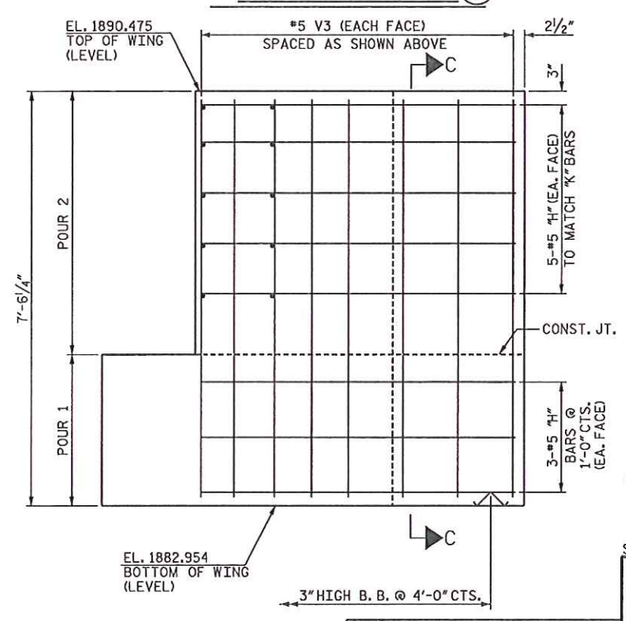

ELEVATION OF WING (W2)

PROJECT NO. B-3457

GRAHAM COUNTY

STATION: 12+37.00 -L-

SHEET 2 OF 3

STATE OF NORTH CAROLINA
DEPARTMENT OF TRANSPORTATION
RALEIGH

SUBSTRUCTURE
END BENT 2

PREPARED BY:

NORTH CAROLINA PROFESSIONAL SEAL 22072 ENGINEER JOHN ARTHUR DILWORTH

7-17-12

WETHERILL ENGINEERING
559 Jones Franklin Rd. Suite 164
Raleigh, N.C. 27606
Bus: 919 851 8077
Fax: 919 851 8107
License: F-0377

TRANSPORTATION PLANNING/DESIGN - BRIDGE/STRUCTURE DESIGN
CIVIL/SITE DESIGN - GIS/GPS - CONSTRUCTION OBSERVATION

REVISIONS								SHEET NO.
NO.	BY:	DATE:	NO.	BY:	DATE:			S-20
1			3					TOTAL SHEETS
2			4					22

DRAWN BY : G. WILSON DATE : 2/12
CHECKED BY : J. DILWORTH DATE : 2/12

P:\2010\1012101 B-3457\Structures\DGN\B3457_STR_EB2-2_S-20.dgn
7/17/2012 2:25:41 PM

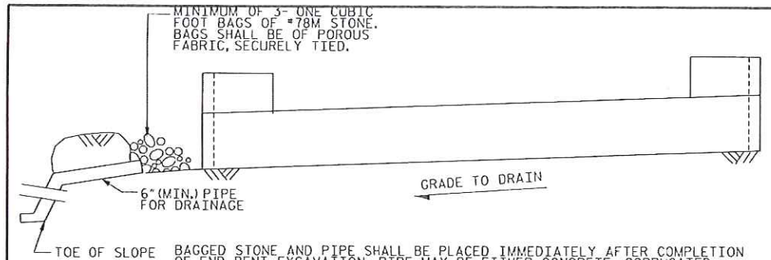

BAGGED STONE AND PIPE SHALL BE PLACED IMMEDIATELY AFTER COMPLETION OF END BENT EXCAVATION. PIPE MAY BE EITHER CONCRETE, CORRUGATED STEEL, CORRUGATED ALUMINUM ALLOY, OR CORRUGATED PLASTIC. PERFORATED PIPE WILL NOT BE ALLOWED.

BAGGED STONE SHALL REMAIN IN PLACE UNTIL THE ENGINEER DIRECTS THAT IT BE REMOVED. THE CONTRACTOR SHALL REMOVE AND DISPOSE OF SILT ACCUMULATIONS AT BAGGED STONE WHEN SO DIRECTED BY THE ENGINEER. BAGS SHALL BE REMOVED AND REPLACED WHENEVER THE ENGINEER DETERMINES THAT THEY HAVE DETERIORATED AND LOST THEIR EFFECTIVENESS.

NO SEPARATE PAYMENT WILL BE MADE FOR THIS WORK AND THE ENTIRE COST OF THIS WORK SHALL BE INCLUDED IN THE UNIT CONTRACT PRICE BID FOR THE SEVERAL PAY ITEMS.

TEMPORARY DRAINAGE AT END BENT

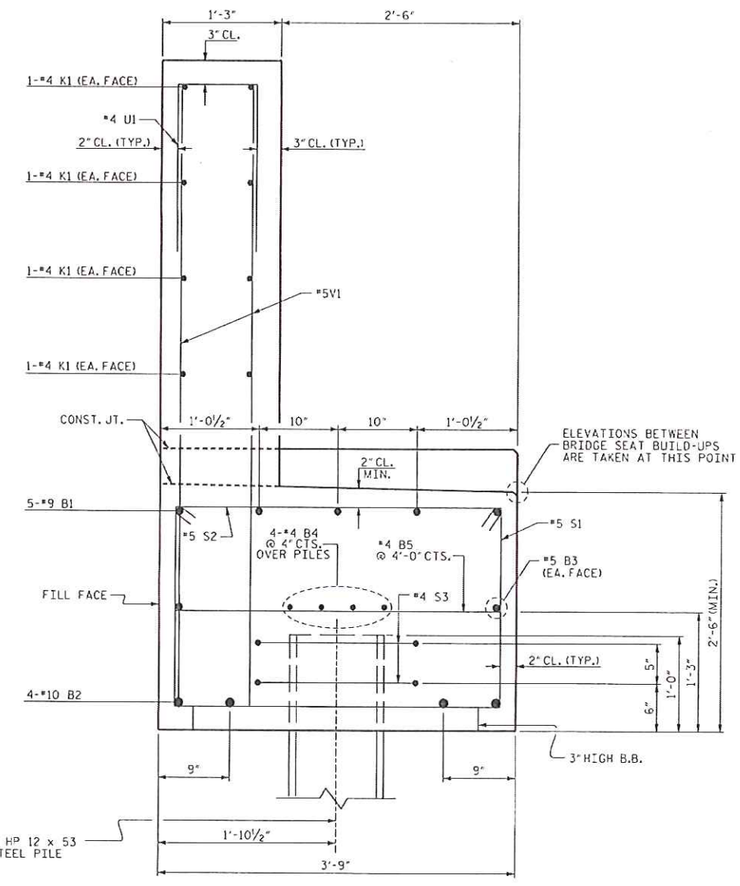

SECTION A-A

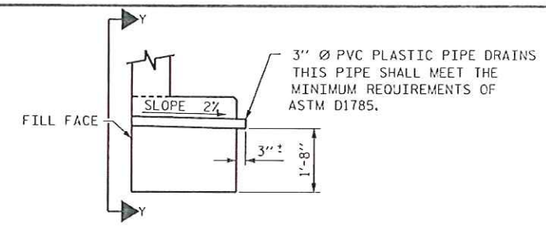

SECTION THRU CAP

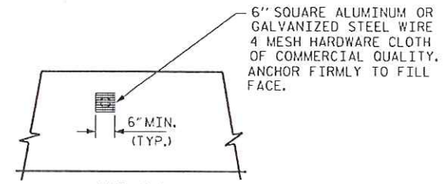

VIEW Y-Y

NOTE: NO SEPARATE PAYMENT WILL BE MADE FOR FURNISHING AND INSTALLING THE PVC PLASTIC PIPE DRAINS, HARDWARE CLOTH AND FASTENERS. THE ENTIRE COST OF THIS WORK SHALL BE INCLUDED IN THE UNIT CONTRACT PRICE BID FOR THE SEVERAL PAY ITEMS.

PIPE DRAIN DETAILS

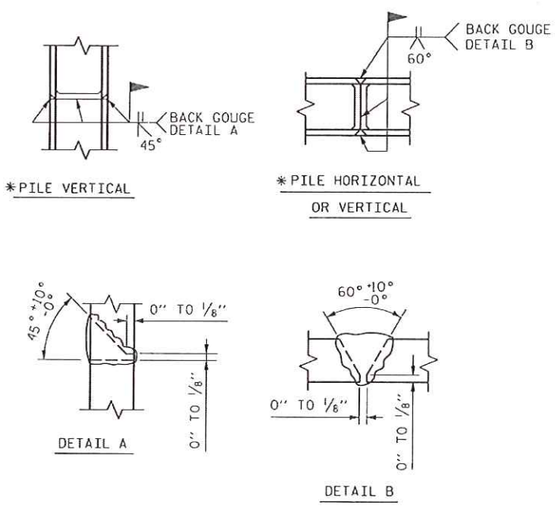

*PILE VERTICAL

*PILE HORIZONTAL OR VERTICAL

*POSITION OF PILE DURING WELDING.

PILE SPLICE DETAILS

BAR TYPES

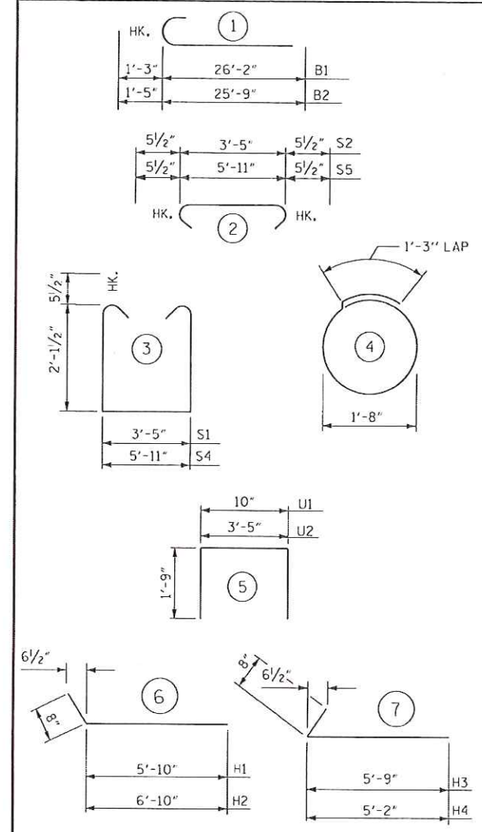

(ALL BAR DIMENSIONS ARE OUT TO OUT.)

BILL OF MATERIAL

END BENT 2

BAR	NO.	SIZE	TYPE	LENGTH	WEIGHT
B1	10	#9	1	27'-5"	932
B2	8	#10	1	27'-2"	935
B3	4	#5	STR	23'-4"	97
B4	8	#4	STR	23'-0"	123
B5	10	#4	STR	3'-5"	23
B6	10	#4	STR	5'-8"	38
B7	5	#4	STR	2'-2"	7
H1	8	#5	6	5'-10"	49
H2	8	#5	6	6'-10"	57
H3	8	#5	7	5'-9"	48
H4	8	#5	7	5'-2"	43
K1	16	#4	STR.	22'-5"	240
K2	2	#4	STR.	7'-8"	10
K3	2	#4	STR.	7'-4"	10
S1	43	#5	3	8'-7"	385
S2	43	#5	2	4'-4"	194
S3	10	#4	4	6'-6"	43
S4	1	#5	3	11'-1"	12
S5	1	#5	2	6'-10"	7
U1	25	#4	5	4'-4"	72
U2	11	#4	5	6'-11"	51
V1	50	#5	STR	6'-1"	317
V2	25	#5	STR	6'-6"	169
V3	24	#5	STR	7'-2"	179

REINFORCING STEEL = 4,041 LBS.

CLASS A CONCRETE
POUR 1 CAP & LOWER PART OF WINGS C.Y. 16.6
POUR 2 BACKWALL AND UPPER PART OF WINGS C.Y. 10.3
TOTAL C.Y. 26.9

HP 12 X 53 STEEL PILES NO. = 5 (LIN. FT.) 50.0
PILE EXCAVATION IN SOIL (LIN. FT.) 12.0
PILE EXCAVATION NOT IN SOIL (LIN. FT.) 38.0

PROJECT NO. B-3457
GRAHAM COUNTY
STATION: 12+37.00 -L-

SHEET 3 OF 3

STATE OF NORTH CAROLINA
DEPARTMENT OF TRANSPORTATION
RALEIGH

SUBSTRUCTURE
END BENT 2

PREPARED BY:
NORTH CAROLINA PROFESSIONAL SEAL 22072 ENGINEER JOHN ARTHUR DILWORTH
5-30-13
WETHERILL ENGINEERING
559 James Pettigrew Rd. Suite 168
Raleigh, N.C. 27606
Phone 919 851 8577
Fax 919 851 8107
License F-0377
TRANSPORTATION PLANNING/DESIGN - BRIDGE/STRUCTURE DESIGN
CAD/SITE DESIGN - CADD/GIS - CONSTRUCTION INSPECTION

REVISIONS								SHEET NO.
NO.	BY:	DATE:	NO.	BY:	DATE:			S-21
1			3					TOTAL SHEETS
2			4					22

DRAWN BY : Z. PIATEK DATE : 4/12
CHECKED BY : J. DILWORTH DATE : 4/12

P:\2010\1012101 B-3457\Structures\OGN\B3457_STR_EB2-3_S-21.dgn
5/30/2013 1:13:12 PM

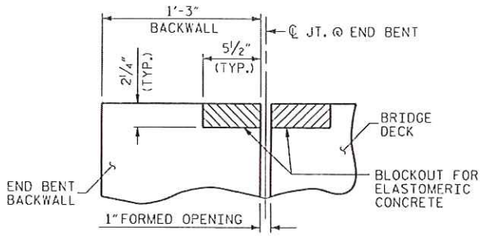

SECTION C-C
FOAM JOINT SEAL
(PRE-SAWED ELASTOMERIC CONCRETE DIMENSIONS)

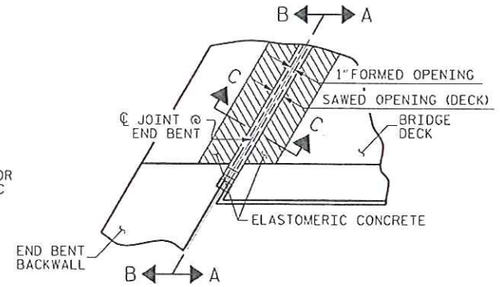

PLAN

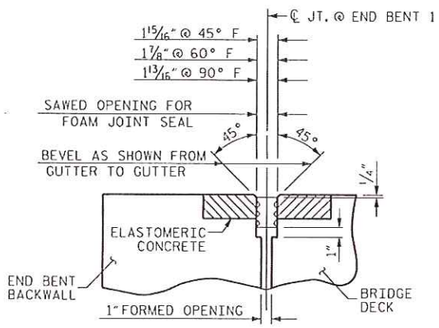

SECTION C-C
FOAM JOINT SEAL
(EXPANSION)

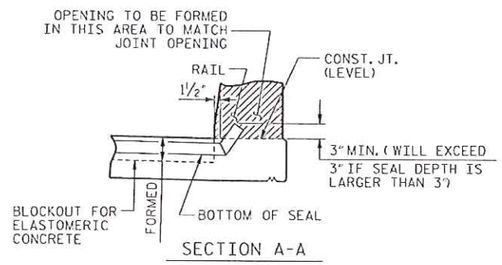

SECTION A-A

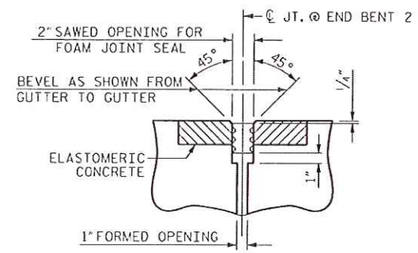

SECTION C-C
FOAM JOINT SEAL
(FIXED)

ELASTOMERIC CONCRETE	
END BENT NO.	ELASTOMERIC CONCRETE * (CU. FT.)
1	4.5
2	4.5
TOTAL	9.0

* BASED ON THE MINIMUM BLOCKOUT SHOWN.

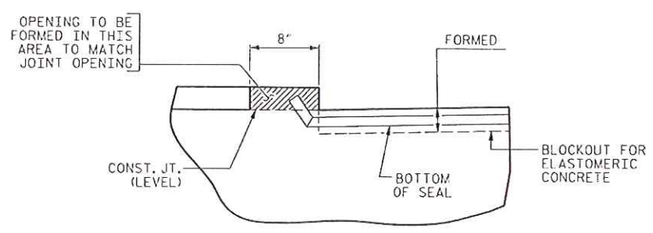

SECTION B-B

JOINT SEAL DETAILS @ END BENT

NOTES

JOINT SHALL BE SAWED PRIOR TO CASTING OF THE PARAPET AND END POST.

FOR FOAM JOINT SEALS, SEE SPECIAL PROVISIONS.

THE NOMINAL UNCOMPRESSED SEAL WIDTH OF THE FOAM JOINT SEAL SHALL BE 2½".

FOR ELASTOMERIC CONCRETE, SEE SPECIAL PROVISIONS.

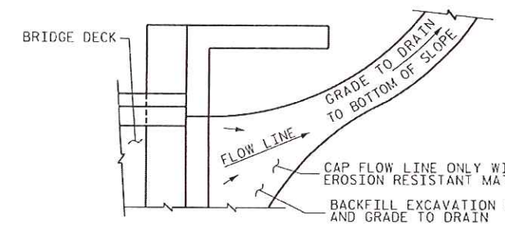

NOTE:
IMMEDIATELY AFTER THE BACKFILLING OF THE END BENT EXCAVATION, GRADE TO DRAIN TO THE BOTTOM OF THE SLOPE AND PROVIDE EROSION RESISTANT MATERIAL, SUCH AS FIBERGLASS ROVING OR AS DIRECTED BY THE ENGINEER TO PREVENT SOIL EROSION AND TO PROTECT THE AREA ADJACENT TO THE STRUCTURE. THE CONTRACTOR WILL BE REQUIRED TO REMOVE THESE MATERIALS PRIOR TO FINAL PAVING.

TEMPORARY DRAINAGE DETAIL

PROJECT NO. B-3457
GRAHAM COUNTY
STATION: 12+37.00 -L-

STATE OF NORTH CAROLINA
DEPARTMENT OF TRANSPORTATION
RALEIGH

STANDARD
JOINT SEAL DETAILS

PREPARED BY:
NORTH CAROLINA SEAL 22072 ENGINEER JOHN ARTHUR DILWORTH
5-30-13
WETHERILL ENGINEERING
559 Jones Franklin Rd. Suite 144
Raleigh, N.C. 27606
Ph: 919 859 8077
Fax: 919 859 8107
License: F-0377
TRANSPORTATION PLANNING/DESIGN - BRIDGE/STRUCTURE DESIGN
CIVIL SITE DESIGN - GIS/GPS - CONSTRUCTION OBSERVATION

REVISIONS							SHEET NO.
NO.	BY:	DATE:	NO.	BY:	DATE:		5-22
1			3				TOTAL SHEETS
2			4				22

STD. NO. BAS4

ASSEMBLED BY : ZPN		DATE : 3/12	
CHECKED BY : JTD		DATE : 3/12	
DRAWN BY : FCJ	11/88	REV. 5/7/03	RWW/JTE
CHECKED BY : ARB	11/88	REV. 5/1/06	RRR MAA/KMW
		REV. 10/1/18	MAA/GM

P:\2010\10121\01_B-3457\Structures\DGN\B3457_STR_BAS4.dgn
5/30/2013 1:23:48 PM

STANDARD NOTES

DESIGN DATA:

SPECIFICATIONS	A.A.S.H.T.O. (CURRENT)
LIVE LOAD	SEE PLANS
IMPACT ALLOWANCE	SEE A.A.S.H.T.O.
STRESS IN EXTREME FIBER OF	
STRUCTURAL STEEL - AASHTO M270 GRADE 36	20,000 LBS. PER SQ. IN.
- AASHTO M270 GRADE 50W	27,000 LBS. PER SQ. IN.
- AASHTO M270 GRADE 50	27,000 LBS. PER SQ. IN.
REINFORCING STEEL IN TENSION	
GRADE 60	24,000 LBS. PER SQ. IN.
CONCRETE IN COMPRESSION	1,200 LBS. PER SQ. IN.
CONCRETE IN SHEAR	SEE A.A.S.H.T.O.
STRUCTURAL TIMBER - TREATED OR	
UNTREATED - EXTREME FIBER STRESS	1,800 LBS. PER SQ. IN.
COMPRESSION PERPENDICULAR TO GRAIN OF TIMBER	375 LBS. PER SQ. IN.
EQUIVALENT FLUID PRESSURE OF EARTH	30 LBS. PER CU. FT. (MINIMUM)

MATERIAL AND WORKMANSHIP:

EXCEPT AS MAY OTHERWISE BE SPECIFIED ON PLANS OR IN THE SPECIAL PROVISIONS, ALL MATERIAL AND WORKMANSHIP SHALL BE IN ACCORDANCE WITH THE 2006 "STANDARD SPECIFICATIONS FOR ROADS AND STRUCTURES" OF THE N. C. DEPARTMENT OF TRANSPORTATION.

STEEL SHEET PILING FOR PERMANENT OR TEMPORARY APPLICATIONS SHALL BE HOT ROLLED.

CONCRETE:

UNLESS OTHERWISE REQUIRED ON PLANS, CLASS A CONCRETE SHALL BE USED FOR ALL PORTIONS OF ALL STRUCTURES WITH THE EXCEPTION THAT: CLASS AA CONCRETE SHALL BE USED IN BRIDGE SUPERSTRUCTURES, ABUTMENT BACKWALLS, AND APPROACH SLABS; AND CLASS B CONCRETE SHALL BE USED FOR SLOPE PROTECTION AND RIP RAP.

CONCRETE CHAMFERS:

UNLESS OTHERWISE NOTED ON THE PLANS, ALL EXPOSED CORNERS ON STRUCTURES SHALL BE CHAMFERED 3/4" WITH THE FOLLOWING EXCEPTIONS: TOP CORNERS OF CURBS MAY BE ROUNDED TO 1-1/2" RADIUS WHICH IS BUILT INTO CURB FORMS; CORNERS OF TRANSVERSE FLOOR EXPANSION JOINTS SHALL BE ROUNDED WITH A 1/4" FINISHING TOOL UNLESS OTHERWISE REQUIRED ON PLANS; AND CORNERS OF EXPANSION JOINTS IN THE ROADWAY FACES AND TOPS OF CURBS AND SIDEWALKS SHALL BE ROUNDED TO A 1/4" RADIUS WITH A FINISHING STONE OR TOOL UNLESS OTHERWISE REQUIRED ON PLANS.

DOWELS:

DOWELS WHEN INDICATED ON PLANS AS FOR CULVERT EXTENSIONS, SHALL BE EMBEDDED AT LEAST 12" INTO THE OLD CONCRETE AND GROUTED INTO PLACE WITH 1:2 CEMENT MORTAR.

ALLOWANCE FOR DEAD LOAD DEFLECTION, SETTLEMENT, ETC. IN CASTING SUPERSTRUCTURES:

BRIDGES SHALL BE BUILT ON THE GRADE OR VERTICAL CURVE SHOWN ON PLANS. SLABS, CURBS AND PARAPETS SHALL CONFORM TO THE GRADE OR CURVE.

ALL DIMENSIONS WHICH ARE GIVEN IN SECTION AND ARE AFFECTED BY DEAD LOAD DEFLECTIONS ARE DIMENSIONS AT CENTER LINE OF BEARING UNLESS OTHERWISE NOTED ON PLANS. IN SETTING FORMS FOR STEEL BEAM BRIDGES AND PRESTRESSED CONCRETE GIRDER BRIDGES, ADJUSTMENTS SHALL BE MADE DUE TO THE DEAD LOAD DEFLECTIONS FOR THE ELEVATIONS SHOWN. WHERE BLOCKS ARE SHOWN OVER BEAMS FOR BUILDING UP TO THE SLAB, THE VERTICAL DIMENSIONS OF THE BLOCKS SHALL BE ADJUSTED BETWEEN BEARINGS TO COMPENSATE FOR DEAD LOAD DEFLECTIONS, VERTICAL CURVE ORDINATE, AND ACTUAL BEAM CAMBER. WHERE BOTTOM OF SLAB IS IN LINE WITH BOTTOM OF TOP FLANGES, DEPTH OF SLAB BETWEEN BEARINGS SHALL BE ADJUSTED TO COMPENSATE FOR DEAD LOAD DEFLECTION, VERTICAL CURVE ORDINATE, AND ACTUAL BEAM CAMBER.

IN SETTING FALSEWORK AND FORMS FOR REINFORCED CONCRETE SPANS, AN ALLOWANCE SHALL BE MADE FOR DEAD LOAD DEFLECTIONS, SETTLEMENT OF FALSEWORK, AND PERMANENT CAMBER WHICH SHALL BE PROVIDED FOR IN ADDITION TO THE ELEVATIONS SHOWN. AFTER REMOVAL OF THE FALSEWORK, THE FINISHED STRUCTURES SHALL CONFORM TO THE PROFILE AND ELEVATIONS SHOWN ON THE PLANS AND CONSTRUCTION ELEVATIONS FURNISHED BY THE ENGINEER.

DETAILED DRAWINGS FOR FALSEWORK OR FORMS FOR BRIDGE SUPERSTRUCTURE AND ANY STRUCTURE OR PARTS OF A STRUCTURE AS NOTED ON THE PLANS SHALL BE SUBMITTED TO THE ENGINEER FOR APPROVAL BEFORE CONSTRUCTION OF THE FALSEWORK OR FORMS IS STARTED.

REINFORCING STEEL:

ALL REINFORCING STEEL SHALL BE DEFORMED. DIMENSIONS RELATIVE TO PLACEMENT OF REINFORCING ARE TO CENTERS OF BARS UNLESS OTHERWISE INDICATED IN THE PLANS. DIMENSIONS ON BAR DETAILS ARE TO CENTERS OF BARS OR ARE OUT TO OUT AS INDICATED ON PLANS.

WIRE BAR SUPPORTS SHALL BE PROVIDED FOR REINFORCING STEEL WHERE INDICATED ON THE PLANS. WHEN BAR SUPPORT PIECES ARE PLACED IN CONTINUOUS LINES, THEY SHALL BE SO PLACED THAT THE ENDS OF THE SUPPORTING WIRES SHALL BE LAPPED TO LOCK LEGS ON ADJOINING PIECES.

STRUCTURAL STEEL:

AT THE CONTRACTOR'S OPTION, HE MAY SUBSTITUTE 7/8" Ø SHEAR STUDS FOR THE ¾" Ø STUDS SPECIFIED ON THE PLANS. THIS SUBSTITUTION SHALL BE MADE AT THE RATE OF 3 - 7/8" Ø STUDS FOR 4 - 3/4" Ø STUDS, AND STUD SPACING CHANGES SHALL BE MADE AS NECESSARY TO PROVIDE THE SAME EQUIVALENT NUMBER OF 7/8" Ø STUDS ALONG THE BEAM AS SHOWN FOR 3/4" Ø STUDS BASED ON THE RATIO OF 3 - 7/8" Ø STUDS FOR 4 - 3/4" Ø STUDS. STUDS OF THE LENGTH SPECIFIED ON THE PLANS MUST BE PROVIDED. THE MAXIMUM SPACING SHALL BE 2'-0".

EXCEPT AT THE INTERIOR SUPPORTS OF CONTINUOUS BEAMS WHERE THE COVER PLATE IS IN CONTACT WITH BEARING PLATE, THE CONTRACTOR MAY, AT HIS OPTION, SUBSTITUTE FOR THE COVER PLATES DESIGNATED ON THE PLANS COVER PLATES OF THE EQUIVALENT AREA PROVIDED THESE PLATES ARE AT LEAST 5/16" IN THICKNESS AND DO NOT EXCEED A WIDTH EQUAL TO THE FLANGE WIDTH LESS 2" OR A THICKNESS EQUAL TO 2 TIMES THE FLANGE THICKNESS. THE SIZE OF FILLET WELDS SHALL CONFORM TO THE REQUIREMENTS OF THE CURRENT ANSI/AASHTO/AWS "BRIDGE WELDING CODE". ELECTROSLAG WELDING WILL NOT BE PERMITTED.

WITH THE SOLE EXCEPTION OF EDGES AT SURFACES WHICH BEAR ON OTHER SURFACES, ALL SHARP EDGES AND ENDS OF SHAPES AND PLATES SHALL BE SLIGHTLY ROUNDED BY SUITABLE MEANS TO A RADIUS OF APPROXIMATELY 1/16 INCH OR EQUIVALENT FLAT SURFACE AT A SUITABLE ANGLE PRIOR TO PAINTING, GALVANIZING, OR METALLIZING.

HANDRAILS AND POSTS:

METAL STANDARDS AND FACES OF THE CONCRETE END POSTS FOR THE METAL RAIL SHALL BE SET NORMAL TO THE GRADE OF THE CURB, UNLESS OTHERWISE SHOWN ON PLANS. THE METAL RAIL AND TOPS OF CONCRETE POSTS USED WITH THE ALUMINUM RAIL SHALL BE BUILT PARALLEL TO THE GRADE OF THE CURB.

METAL HANDRAILS SHALL BE IN ACCORDANCE WITH THE PLANS. RAILS SHALL BE AS MANUFACTURED FOR BRIDGE RAILING. CASTINGS SHALL BE OF A UNIFORM APPEARANCE. FINS AND OTHER DEFORMATIONS RESULTING FROM CASTING OR OTHERWISE SHALL BE REMOVED IN A MANNER SO THAT A UNIFORM COLORING OF THE COMPLETED CASTING SHALL BE OBTAINED. CASTINGS WITH DISCOLORATIONS OR OF NON-UNIFORM COLORING WILL NOT BE ACCEPTED. CERTIFIED MILL REPORTS ARE REQUIRED FOR METAL RAILS AND POSTS.

SPECIAL NOTES:

GENERALLY, IN CASE OF DISCREPANCY, THIS STANDARD SHEET OF NOTES SHALL GOVERN OVER THE SPECIFICATIONS, BUT THE REMAINDER OF THE PLANS SHALL GOVERN OVER NOTES HEREON, AND SPECIAL PROVISIONS SHALL GOVERN OVER ALL. SEE SPECIFICATIONS ARTICLE 105-4.

ENGLISH

JANUARY, 1990