09/08/99

TIP PROJECT: 17BP.14.R.8

CONTRACT: DN00141 DN00253

See Sheet 1-A For Index of Sheets
See Sheet 1-B For Symbology

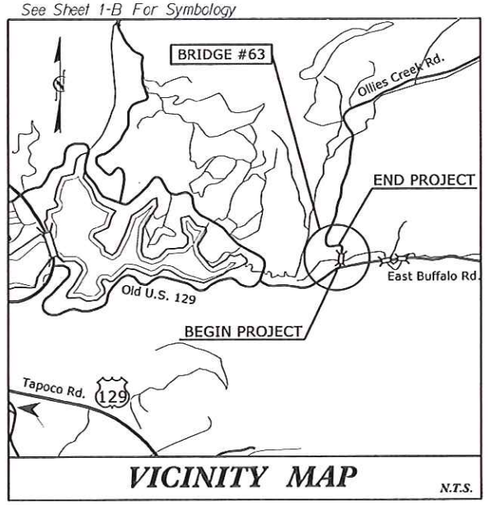

VICINITY MAP N.T.S.

STATE OF NORTH CAROLINA
DIVISION OF HIGHWAYS

GRAHAM COUNTY

STATE	STATE PROJECT REFERENCE NO.	SHEET NO.	TOTAL SHEETS
N.C.	17BP.14.R.8	1	

STATE PROJ. NO.	F. A. PROJ. NO.	DESCRIPTION
17BP.14.R.8		PE, R / W, CONST.

LOCATION: ***BRIDGE NO. 63 ON SR 1253 (OLLIES CREEK ROAD) OVER EAST BUFFALO CREEK***

TYPE OF WORK: ***GRADING, PAVING, DRAINAGE, CULVERT AND TRAFFIC CONTROL***

BEGIN PROJECT 17BP.14.R.8
-L- POT STA. 10+09.04

END PROJECT 17BP.14.R.8
-L- PT STA. 12+04.94

NC GRID NAD 83

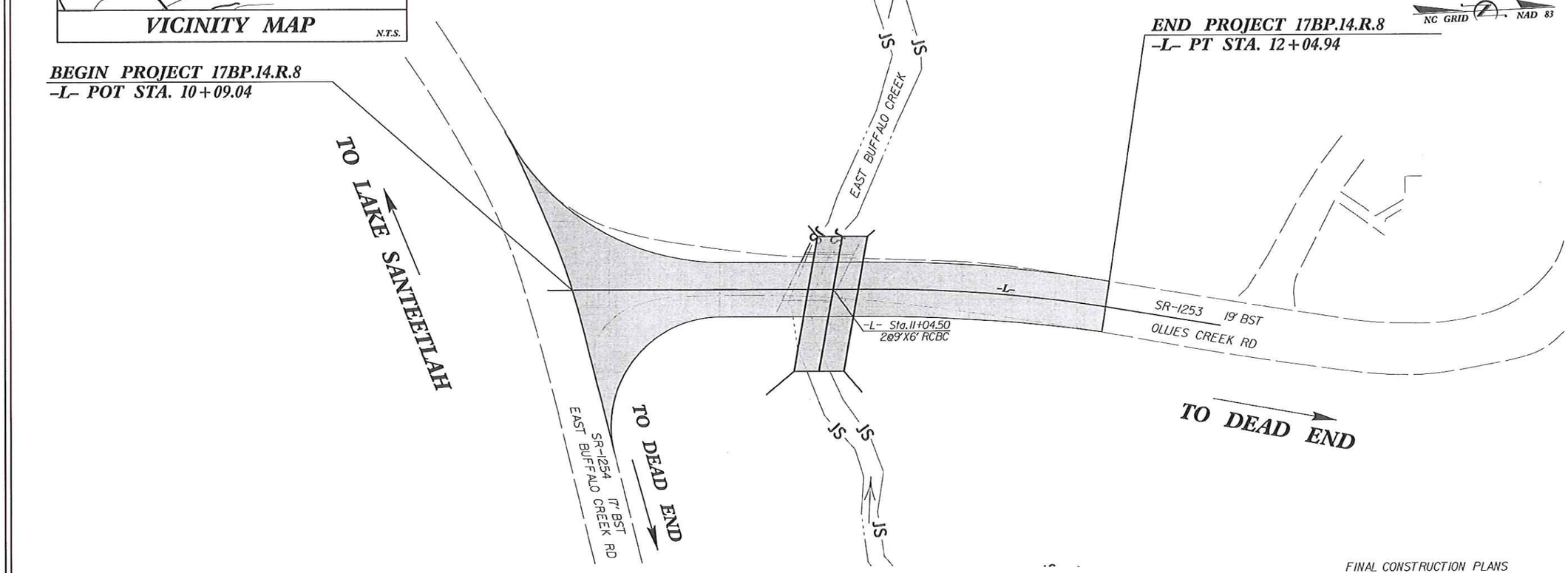

FINAL CONSTRUCTION PLANS

GRAPHIC SCALES

PLANS 20 10 0 20 40

PROFILE (HORIZONTAL) 20 10 0 20 40

PROFILE (VERTICAL) 10 5 0 10 20

DESIGN DATA

ADT 2000 = 150

V = 20 MPH

FUNC CLASS = LOCAL

SUB-REGIONAL TIER

PROJECT LENGTH

Total Length Project 17BP.14.R.8 = 0.037 Miles

NCDOT CONTACT: *Joshua B. Deyton, PE*
NCDOT DIVISION 14 BRIDGE MANAGER

Prepared By:

Stantec

Stantec Consulting Services Inc.
801 Jones Franklin Road
Suite 300
Raleigh, NC 27606
Tel. (919) 851-6866
Fax. (919) 851-7024
www.stantec.com
License No. F-0672

Prepared In the Office of:
DIVISION OF HIGHWAYS
1000 Birch Ridge Dr., Raleigh NC, 27610

2012 STANDARD SPECIFICATIONS

RIGHT OF WAY DATE: *August 30, 2012*

LETTING DATE: *June 25, 2013*

Michael D. Lindgren, PE
PROJECT ENGINEER

Robert Williams, PE
PROJECT DESIGN ENGINEER

HYDRAULICS ENGINEER

NORTH CAROLINA PROFESSIONAL SEAL 028441 ENGINEER AMY L. WAZENEGGER

SIGNATURE: P.E. 5-31-13

ROADWAY DESIGN ENGINEER

NORTH CAROLINA PROFESSIONAL SEAL 025513 ENGINEER MICHAEL D. LINDGREN

SIGNATURE: P.E. 5/31/2013

STATE OF NORTH CAROLINA • DEPARTMENT OF TRANSPORTATION •

5/31/2013
U:\Roadway\Proj\GRAHAM63_rdy_TSH.dgn
mlindgren

5/14/99

PROJECT REFERENCE NO.	SHEET NO.
17BPJ4.R.8	1A

ROADWAY DESIGN ENGINEER

NORTH CAROLINA PROFESSIONAL SEAL 25513 ENGINEER MICHAEL D. LINDOWN

5/1/2013

INDEX OF SHEETS

SHEET NUMBER	SHEET
1	TITLE SHEET
1-A	INDEX OF SHEETS, GENERAL NOTES, AND LIST OF STANDARD DRAWINGS
1-B	CONVENTIONAL SYMBOLS
1-C	SURVEY CONTROL SHEET
2	PAVEMENT SCHEDULE & TYPICAL SECTIONS
2A	TEMPORARY SHORING DETAIL
3	SUMMARY OF QUANTITIES
3A	SUMMARY OF EARTHWORK, DRAINAGE AND PAVEMENT REMOVAL
4	PLAN/PROFILE SHEET
5	TEMPORARY DETOUR PLAN
TMP-1 THRU TMP-4	TRAFFIC MANAGEMENT PLANS
PMP-1	PAVEMENT MARKING PLAN
EC-1 THRU EC-4	EROSION CONTROL PLANS
SIGN-1	SIGNING PLAN
UO-1 THRU UO-2	UTILITIES BY OTHERS PLAN
X-1 THRU X-2	CROSS-SECTIONS
S-1 THRU S-5	CULVERT PLANS

GENERAL NOTES

GENERAL NOTES: 2012 SPECIFICATIONS
EFFECTIVE: 01-17-12
REVISED: 11/01/11

GRADE LINE:

GRADING AND SURFACING:
THE GRADE LINES SHOWN DENOTE THE FINISHED ELEVATION OF THE PROPOSED SURFACING AT GRADE POINTS SHOWN ON THE TYPICAL SECTIONS. GRADE LINES MAY BE ADJUSTED AT THEIR BEGINNING AND ENDING AND AT STRUCTURES AS DIRECTED BY THE ENGINEER IN ORDER TO SECURE A PROPER TIE-IN.

CLEARING:

CLEARING ON THIS PROJECT SHALL BE PERFORMED TO THE LIMITS ESTABLISHED BY METHOD II.

SHOULDER CONSTRUCTION:

ASPHALT, EARTH, AND CONCRETE SHOULDER CONSTRUCTION ON THE HIGH SIDE OF SUPERELEVATED CURVES SHALL BE IN ACCORDANCE WITH STD. NO. 560.01.

SIDE ROADS:

THE CONTRACTOR WILL BE REQUIRED TO DO ALL NECESSARY WORK TO PROVIDE SUITABLE CONNECTIONS WITH ALL ROADS, STREETS, AND DRIVES ENTERING THIS PROJECT. THIS WORK WILL BE PAID FOR AT THE CONTRACT UNIT PRICE FOR THE PARTICULAR ITEMS INVOLVED.

TEMPORARY SHORING:

SHORING REQUIRED FOR THE MAINTENANCE OF TRAFFIC NOT SHOWN ON THE PLANS WILL BE PAID FOR AT THE CONTRACT PRICE FOR "TEMPORARY SHORING".

SUBSURFACE PLANS:

NO SUBSURFACE PLANS ARE AVAILABLE ON THIS PROJECT. THE CONTRACTOR SHOULD MAKE HIS OWN INVESTIGATION AS TO THE SUBSURFACE CONDITIONS.

UTILITIES:

UTILITY OWNER ON THIS PROJECT IS DUKE ENERGY AND FRONTIER COMMUNICATIONS (TELEPHONE).

RIGHT-OF-WAY MARKERS:

ALL RIGHT-OF-WAY MARKERS ON THIS PROJECT SHALL BE PLACED BY CONTRACT.

ROADWAY STANDARD DRAWINGS

2012 ROADWAY ENGLISH STANDARD DRAWINGS

The following Roadway Standards as appear in "Roadway Standard Drawings" Highway Design Branch - N. C. Department of Transportation - Raleigh, N. C., Dated January, 2012 are applicable to this project and by reference hereby are considered a part of these plans:

STD.NO.	TITLE
DIVISION 2 - EARTHWORK	
200.02	Method of Clearing - Method II
225.02	Guide for Grading Subgrade - Secondary and Local
DIVISION 3 - PIPE CULVERTS	
300.01	Method of Pipe Installation
DIVISION 5 - SUBGRADE, BASES AND SHOULDERS	
560.01	Method of Shoulder Construction - High Side of Superelevated Curve - Method I
DIVISION 8 - INCIDENTALS	
806.02	Granite Right-of-Way Marker
876.02	Guide for Rip Rap at Pipe Outlets

5/1/2013
U:\Roadway\Proj\GRAHAM63_rdy_psh_1A.dgn
mlindown

04/16/11

PROJECT REFERENCE NO.	SHEET NO.
17BPJ4.R.8	1-B

Note: Not to Scale

****S.U.E. = Subsurface Utility Engineering***

STATE OF NORTH CAROLINA
DIVISION OF HIGHWAYS

CONVENTIONAL PLAN SHEET SYMBOLS

BOUNDARIES AND PROPERTY:

- State Line
- County Line
- Township Line
- City Line
- Reservation Line
- Property Line
- Existing Iron Pin — EIP
- Property Corner
- Property Monument — ECM
- Parcel/Sequence Number — 123
- Existing Fence Line
- Proposed Woven Wire Fence
- Proposed Chain Link Fence
- Proposed Barbed Wire Fence
- Existing Wetland Boundary — WLB
- Proposed Wetland Boundary — WLB
- Existing Endangered Animal Boundary — EAB
- Existing Endangered Plant Boundary — EPB
- Known Soil Contamination: Area or Site
- Potential Soil Contamination: Area or Site

BUILDINGS AND OTHER CULTURE:

- Gas Pump Vent or U/G Tank Cap
- Sign — S
- Well — W
- Small Mine
- Foundation
- Area Outline
- Cemetery
- Building
- School
- Church
- Dam

HYDROLOGY:

- Stream or Body of Water
- Hydro, Pool or Reservoir
- Jurisdictional Stream — JS
- Buffer Zone 1 — BZ 1
- Buffer Zone 2 — BZ 2
- Flow Arrow
- Disappearing Stream
- Spring
- Wetland
- Proposed Lateral, Tail, Head Ditch — FLOW
- False Sump

RAILROADS:

- Standard Gauge — CSX TRANSPORTATION
- RR Signal Milepost — MILEPOST 35
- Switch — SWITCH
- RR Abandoned
- RR Dismantled

RIGHT OF WAY:

- Baseline Control Point
- Existing Right of Way Marker
- Existing Right of Way Line
- Proposed Right of Way Line — RW
- Proposed Right of Way Line with Iron Pin and Cap Marker — RW
- Proposed Right of Way Line with Concrete or Granite R/W Marker — RW
- Proposed Control of Access Line with Concrete C/A Marker — CA
- Existing Control of Access — CA
- Proposed Control of Access — CA
- Existing Easement Line — E
- Proposed Temporary Construction Easement — E
- Proposed Temporary Drainage Easement — TDE
- Proposed Permanent Drainage Easement — PDE
- Proposed Permanent Drainage / Utility Easement — DUE
- Proposed Permanent Utility Easement — PUE
- Proposed Temporary Utility Easement — TUE
- Proposed Aerial Utility Easement — AUE
- Proposed Permanent Easement with Iron Pin and Cap Marker

ROADS AND RELATED FEATURES:

- Existing Edge of Pavement
- Existing Curb
- Proposed Slope Stakes Cut — C
- Proposed Slope Stakes Fill — F
- Proposed Curb Ramp — CR
- Existing Metal Guardrail
- Proposed Guardrail
- Existing Cable Guiderail
- Proposed Cable Guiderail
- Equality Symbol
- Pavement Removal

VEGETATION:

- Single Tree
- Single Shrub
- Hedge
- Woods Line
- Orchard
- Vineyard — Vineyard

EXISTING STRUCTURES:

MAJOR:

- Bridge, Tunnel or Box Culvert — CONC
- Bridge Wing Wall, Head Wall and End Wall — CONC WW

MINOR:

- Head and End Wall — CONC HW
- Pipe Culvert
- Footbridge
- Drainage Box: Catch Basin, DI or JB — CB
- Paved Ditch Gutter
- Storm Sewer Manhole — S
- Storm Sewer — S

UTILITIES:

POWER:

- Existing Power Pole
- Proposed Power Pole
- Existing Joint Use Pole
- Proposed Joint Use Pole
- Power Manhole — P
- Power Line Tower
- Power Transformer
- U/G Power Cable Hand Hole
- H-Frame Pole
- Recorded U/G Power Line — P
- Designated U/G Power Line (S.U.E.*) — P

TELEPHONE:

- Existing Telephone Pole
- Proposed Telephone Pole
- Telephone Manhole — T
- Telephone Booth — 3
- Telephone Pedestal — T
- Telephone Cell Tower
- U/G Telephone Cable Hand Hole — HH
- Recorded U/G Telephone Cable — T
- Designated U/G Telephone Cable (S.U.E.*) — T
- Recorded U/G Telephone Conduit — TC
- Designated U/G Telephone Conduit (S.U.E.*) — TC
- Recorded U/G Fiber Optics Cable — T FO
- Designated U/G Fiber Optics Cable (S.U.E.*) — T FO

WATER:

- Water Manhole — W
- Water Meter
- Water Valve
- Water Hydrant
- Recorded U/G Water Line — W
- Designated U/G Water Line (S.U.E.*) — W
- Above Ground Water Line — A/G Water

TV:

- TV Satellite Dish
- TV Pedestal — C
- TV Tower
- U/G TV Cable Hand Hole — HH
- Recorded U/G TV Cable — TV
- Designated U/G TV Cable (S.U.E.*) — TV
- Recorded U/G Fiber Optic Cable — TV FO
- Designated U/G Fiber Optic Cable (S.U.E.*) — TV FO

GAS:

- Gas Valve
- Gas Meter
- Recorded U/G Gas Line — G
- Designated U/G Gas Line (S.U.E.*) — G
- Above Ground Gas Line — A/G Gas

SANITARY SEWER:

- Sanitary Sewer Manhole
- Sanitary Sewer Cleanout
- U/G Sanitary Sewer Line — SS
- Above Ground Sanitary Sewer — A/G Sanitary Sewer
- Recorded SS Forced Main Line — FSS
- Designated SS Forced Main Line (S.U.E.*) — FSS

MISCELLANEOUS:

- Utility Pole
- Utility Pole with Base
- Utility Located Object
- Utility Traffic Signal Box — S
- Utility Unknown U/G Line — ?UTL
- U/G Tank; Water, Gas, Oil
- Underground Storage Tank, Approx. Loc. — UST
- A/G Tank; Water, Gas, Oil
- Geoenvironmental Boring
- U/G Test Hole (S.U.E.*)
- Abandoned According to Utility Records — AATUR
- End of Information — E.O.I.

5/14/99

PROJECT REFERENCE NO.	SHEET NO.
17BP.14.R.8	2
R/W SHEET NO.	

ROADWAY DESIGN ENGINEER

NORTH CAROLINA PROFESSIONAL SEAL 025513 ENGINEER MICHAEL D. LINDGREN

5/1/2013

PAVEMENT SCHEDULE

C1	PROP. APPROX. 3" ASPHALT CONCRETE SURFACE COURSE, TYPE S9.5B, AT AN AVERAGE RATE OF 168 LBS. PER SQ. YD. IN EACH OF TWO LAYERS
C2	PROP. VAR. DEPTH ASPHALT CONCRETE SURFACE COURSE, TYPE S9.5B, AT AN AVERAGE RATE OF 112 LBS. PER SQ. YD. PER 1" DEPTH. TO BE PLACED IN LAYERS NOT TO EXCEED 2" IN DEPTH.
E1	PROP. APPROX. 5" ASPHALT CONCRETE BASE COURSE, TYPE B25.0B, AT AN AVERAGE RATE OF 570 LBS. PER SQ. YD.
E2	PROP. VAR. DEPTH ASPHALT CONCRETE BASE COURSE, TYPE B25.0B, AT AN AVERAGE RATE OF 114 LBS. PER SQ. YD. PER 1" DEPTH. TO BE PLACED IN LAYERS NOT LESS THAN 3" IN DEPTH OR GREATER THAN 5½" IN DEPTH.
T	EARTH MATERIAL
U	EXISTING PAVEMENT
W	WEDGING

NOTE: PAVEMENT EDGE SLOPES ARE 1:1 UNLESS SHOWN OTHERWISE.

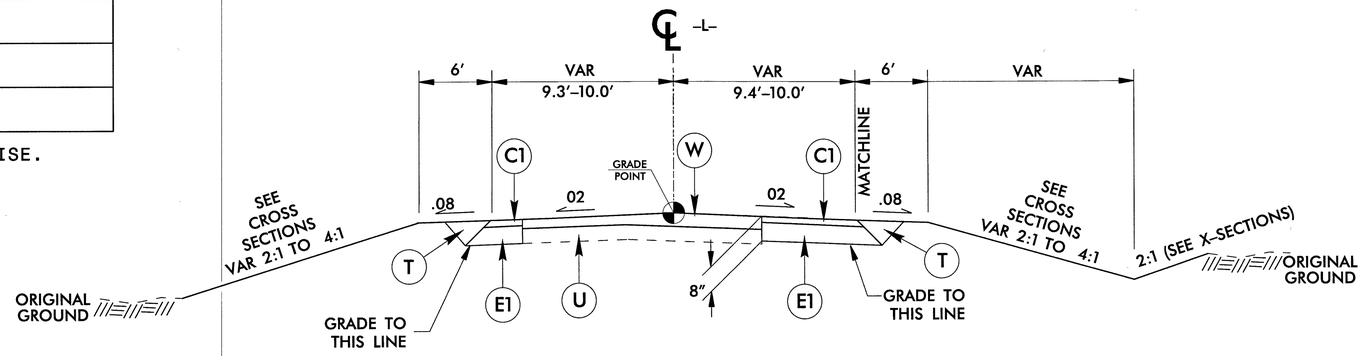

TYPICAL SECTION NO. 1

–L– STA. 10+09.04 TO STA. 12+04.94

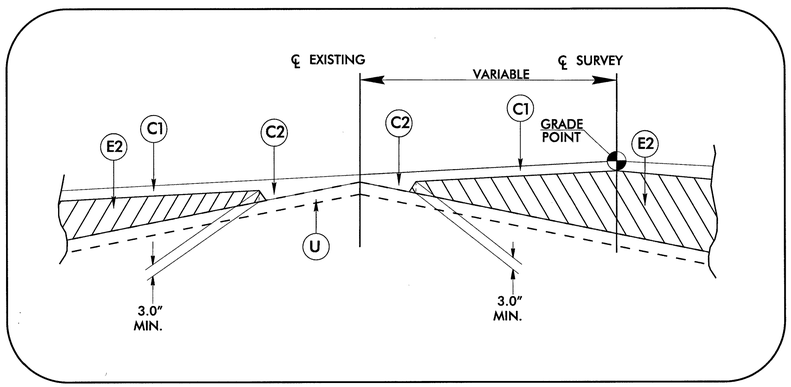

WEDGING DETAIL

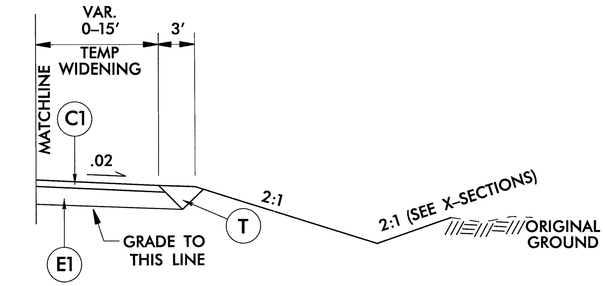

PARTIAL TYPICAL SECTION NO. 1A

USE PARTIAL TYPICAL SECTION No. 1A IN CONJUNCTION WITH TYPICAL SECTION No. 1:

–L– STA. 10+09.04 TO STA. 12+45
(TEMPORARY WIDENING FOR TRAFFIC CONTROL)

5/1/2013
U:\Roadway\Projects\GRAHAM63_rdy_TYP.dgn

PROJECT REFERENCE NO.	SHEET
17BP.14.R.8	2-A

GEOTECHNICAL ENGINEER

NORTH CAROLINA PROFESSIONAL SEAL 18580 ENGINEER GARY R. TAYLOR

SIGNATURE 12/12/12 DATE

ENGINEER

SIGNATURE DATE

GROUNDWATER CONDITION (SEE NOTE 6)	H SHORING HEIGHT (FT)	SLOPE OR SURCHARGE CASE WITH NO TRAFFIC IMPACT					SURCHARGE CASE WITH TRAFFIC IMPACT				
		SHEET PILES		H-PILES WITH TIMBER LAGGING			SHEET PILES		H-PILES WITH TIMBER LAGGING		
		MINIMUM REQUIRED EMBEDMENT (FT)	MINIMUM REQUIRED SECTION MODULUS (IN^3/FT)	MINIMUM REQUIRED EMBEDMENT* (FT) (SEE NOTE 10)			MINIMUM REQUIRED EMBEDMENT (FT)	MINIMUM REQUIRED SECTION MODULUS (IN^3/FT)	MINIMUM REQUIRED EMBEDMENT* (FT) (SEE NOTE 10)		
				HP 10x42	HP 12x53	HP 14x73			HP 10x42	HP 12x53	HP 14x73
GROUNDWATER ELEVATION BEWTEEN BOTTOM OF SHORING AND PILE TIP	< 6	11.5	4.5	11.5	11.5	11.5	16.0	12.0	13.0	13.0	13.0
	7	13.0	7.0	13.0	13.0	13.0	17.0	14.5	14.5	14.5	14.5
	8	15.0	10.0	--	15.0	15.0	18.0	17.0	--	15.5	15.5
	9	17.0	14.0	--	17.0	17.0	19.0	20.0	--	17.0	17.0
	10	18.5	19.5	--	--	18.5	20.0	23.5	--	--	18.5
	11	20.5	26.0	--	--	--	21.0	28.0	--	--	20.0
	12	22.5	33.0	--	--	--	22.0	33.0	--	--	21.5
GROUNDWATER ELEVATION BELOW PILE TIP	< 6	7.5	3.0	8.0	8.0	8.0	11.0	10.0	9.5	9.5	9.5
	7	8.5	4.5	9.5	9.5	9.5	12.0	12.0	10.5	10.5	10.5
	8	10.0	6.5	10.5	10.5	10.5	12.5	14.0	11.5	11.5	11.5
	9	11.0	9.5	--	12.0	12.0	13.5	16.5	--	12.5	12.5
	10	12.5	13.0	--	--	13.5	14.0	19.5	--	13.5	13.5
	11	13.5	17.0	--	--	14.5	15.0	22.5	--	--	14.5
	12	15.0	21.5	--	--	16.0	16.0	25.5	--	--	15.5

MINIMUM REQUIRED EMBEDMENT AND SECTION MODULUS

***DO NOT USE H-PILES WITH TIMBER LAGGING FOR GROUNDWATER CONDITION, SHORING HEIGHT AND H-PILE SIZE SHOWN IF MINIMUM REQUIRED EMBEDMENT IS "--".**

NOTES:

1. AT THE CONTRACTOR'S OPTION, USE STANDARD TEMPORARY SHORING AS NOTED IN THE PLANS.
2. FOR STANDARD TEMPORARY SHORING, SEE STANDARD SHORING PROVISION.
3. STANDARD TEMPORARY SHORING IS BASED ON THE FOLLOWING IN-SITU ASSUMED SOIL PARAMETERS:
   UNIT WEIGHT, γ = 120 LB/CF
   FRICTION ANGLE, ϕ = 30 DEGREES
   COHESION, c = 0 LB/SF
4. DO NOT USE STANDARD TEMPORARY SHORING IF ASSUMED SOIL PARAMETERS ARE NOT APPLICABLE.
5. DO NOT USE STANDARD TEMPORARY SHORING WHEN VERY LOOSE OR SOFT SOIL OR MUCK IS WITHIN THE EMBEDMENT DEPTH.
6. USE GROUNDWATER ELEVATION NOTED IN THE PLANS. IF NO GROUNDWATER ELEVATION IS SHOWN IN THE PLANS, USE "GROUNDWATER ELEVATION BETWEEN BOTTOM OF SHORING AND PILE TIP" FOR GROUNDWATER CONDITION. DO NOT USE STANDARD TEMPORARY SHORING IF GROUNDWATER IS ABOVE BOTTOM OF SHORING.
7. AT THE CONTRACTOR'S OPTION OR IF AVAILABLE CLEAR DISTANCE IS LESS THAN THE MINIMUM REQUIRED FOR CONCRETE BARRIER, SET BARRIER NEXT TO AND UP AGAINST TRAFFIC SIDE OF PILES AND USE "SURCHARGE CASE WITH TRAFFIC IMPACT".
8. AT THE CONTRACTOR'S OPTION OR IF AVAILABLE CLEAR DISTANCE IS LESS THAN 4' FOR TEMPORARY GUARDRAIL, ATTACH GUARDRAIL TO TRAFFIC SIDE OF PILES AS SHOWN IN THE PLANS AND USE "SURCHARGE CASE WITH TRAFFIC IMPACT".
9. MINIMUM REQUIRED EXTENSION IS 6" FOR "SLOPE OR SURCHARGE CASE WITH NO TRAFFIC IMPACT" AND 32" FOR "SURCHARGE CASE WITH TRAFFIC IMPACT".
10. MINIMUM REQUIRED EMBEDMENT FOR H-PILES WITH TIMBER LAGGING IS BASED ON DRIVEN H-PILES AT MAXIMUM 6' SPACING. AT THE CONTRACTOR'S OPTION, EMBEDMENT DEPTHS MAY BE REDUCED BY 25% FOR DRILLED-IN H-PILES.
11. SUBMIT A "STANDARD TEMPORARY SHORING SELECTION FORM" AT LEAST 7 DAYS BEFORE STARTING TEMPORARY SHORING CONSTRUCTION. UP TO 3 SHORING LOCATIONS MAY BE INCLUDED ON EACH FORM.
12. CONTACT THE ENGINEER IF PILES DO NOT ATTAIN THE MINIMUM REQUIRED EMBEDMENT.

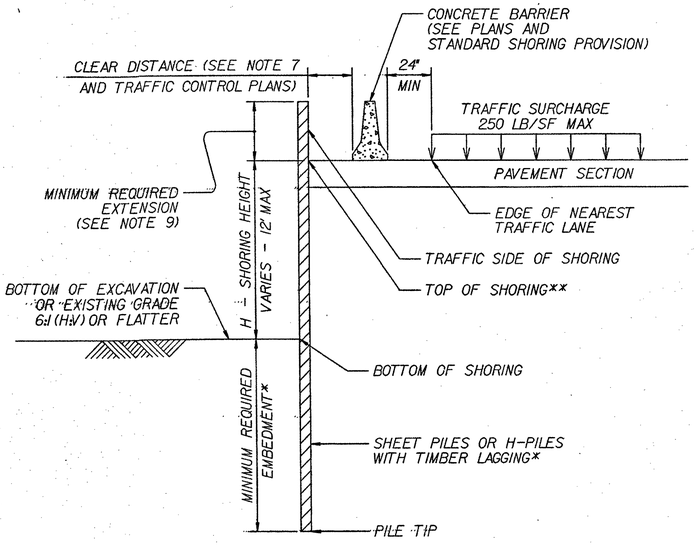

CONCRETE BARRIER

****TOP OF SHORING = EDGE OF PAVEMENT**

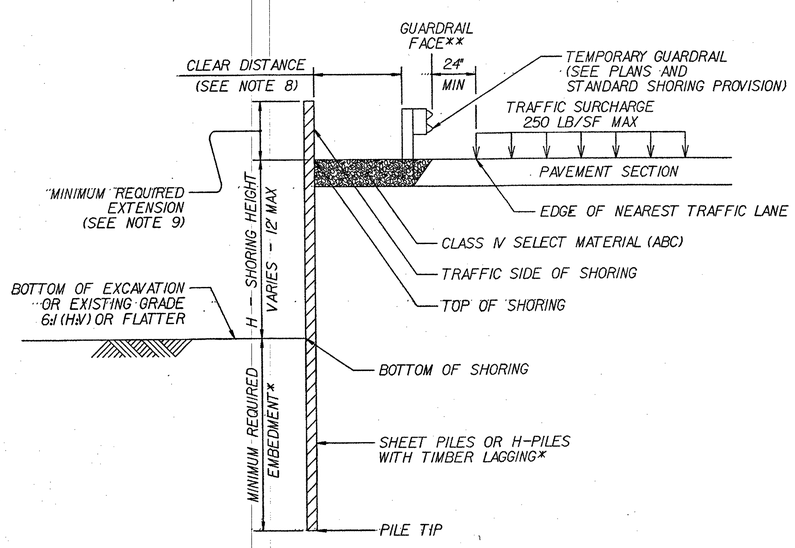

TEMPORARY GUARDRAIL

****GUARDRAIL FACE = EDGE OF PAVEMENT**

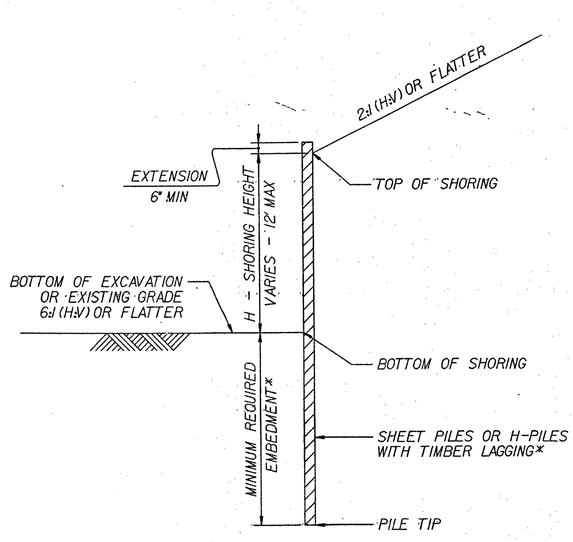

STANDARD TEMPORARY SHORING

(SLOPE CASE)
***SEE TABLE ABOVE.**

STANDARD TEMPORARY SHORING

(SURCHARGE CASE)
***SEE TABLE ABOVE.**

amec

AMEC Environment & Infrastructure, Inc.
4021 STIRRUP CREEK DRIVE, SUITE 100
DURHAM, NORTH CAROLINA
NC Engineering F-1253 NC Geology C-247

STATE OF NORTH CAROLINA DEPARTMENT OF TRANSPORTATION

GEOTECHNICAL ENGINEERING UNIT

STATE OF NORTH CAROLINA DEPARTMENT OF TRANSPORTATION RALEIGH

STANDARD DRAWING NO. 1801.01

STANDARD TEMPORARY SHORING

DATE: 11-20-12

PROJECT REFERENCE NO.	SHEET NO.
17BP.14.R.8	3

STATE OF NORTH CAROLINA
DIVISION OF HIGHWAYS

SUMMARY OF QUANTITIES

Line Item	Des	Sec No.	Description	Quantity	Unit
0000100000-N		800	MOBILIZATION	1	LS
0000400000-N		801	CONSTRUCTION SURVEYING	1	LS
0043000000-N		226	GRADING	1	LS
			CLEARING AND GRUBBING	0.2	ACRES
			UNCLASSIFIED EXCAVATION	140	CY
			BORROW EXCAVATION	540	CY
			FINE GRADING	660	SY
			REMOVAL OF EXISTING ASPHALT PAVEMENT	270	SY
0050000000-E		226	SUPP CLEARING & GRUBBING	1	ACRES
0057000000-E		226	UNDERCUT EXCAVATION	50	CY
0196000000-E		270	GEOTEXTILE SOIL STABILIZATION	100	SY
0199000000-E		SP	TEMPORARY SHORING	800	SF
0314000000-E		SP	SELECT MATERIAL, CLASS VI	50	TONS
0318000000-E		300	FND CONDIT MATL MINOR STRS	10	TONS
0320000000-E		300	FND CONDIT GEOTEXTILE	30	SY
0335400000-E		305	24" DRAINAGE PIPE	64	LF
0995000000-E		340	PIPE REMOVAL	72	LF
1220000000-E		545	INCIDENTAL STONE BASE	100	TONS
1489000000-E		610	ASP CONC BASE CRS B25.0B	170	TONS
1519000000-E		610	ASP CONC SURF CRS S9.5B	130	TONS
1575000000-E		620	ASP FOR PLANT MIX	20	TONS
2000000000-N		806	RIGHT OF WAY MARKERS	2	EA
3569000000-E		867	BARBED WIRE FENCE RESET	20	LF
3628000000-E		876	RIP RAP, CLASS I	7	TONS
8622000000-E		876	GEOTEXTILE FOR DRAINAGE	90	SY
4025000000-E		901	CONTR FURN, TYPE E SIGN	9	SF
4072000000-E		903	SUPPORT, 3-LB STL U-CHAN	13	LF
4102000000-N		904	SIGN ERECTION, TYPE E	1	EA
4155000000-N		907	DISPOSE SIGN SYST U-CHAN	7	EA
4400000000-E		1110	WORK ZONE SIGNS (STAT)	184	SF
4405000000-E		1110	WORK ZONE SIGNS (PORTABLE)	144	SF
4410000000-E		1110	WORK ZONE SIGNS (BARR)	36	SF
4430000000-N		1130	DRUMS	25	EA
4435000000-N		1135	CONES	25	EA
4445000000-E		1145	BARRICADES (TYPE III)	16	LF
4450000000-N		1150	FLAGGER	320	HR
4465000000-N		1160	TEMPORARY CRASH CUSHIONS	4	EA
4470000000-N		1160	RESET CRASH CUSHION	2	EA
4490000000-E		1170	PORT CONC BARRIER(ANCHRD)	150	LF
4505000000-E		1170	RESET PORT CONC BARR,ANCH	100	LF
4650000000-N		1251	TEMP RAISED PVMT MRKS	80	EA
4770000000-E		1205	4" COLD APPL PLSTIC LINES TYPE 4	810	LF
4795000000-E		1205	24" COLD APPL PLSTIC LINES TYPE 4	70	LF
4810000000-E		1205	PAINT PVMT MARKINGS 4"	2353	LF
4835000000-E		1205	PAINT PVMT MARKINGS 24"	62	LF
4850000000-E		1205	REMOVAL OF PAVMENT MARKING LINES (4")	600	LF
4915000000-E		1264	7' U-CHANNEL POSTS	4	EA
4957000000-N		1264	OBJECT MARKERS (TYPE 3)	4	EA
6000000000-E		1605	TEMPORARY SILT FENCE	215	LF
6012000000-E		1610	SEDIMENT CONTROL STONE	40	TONS
6009000000-E		1610	EROS CONTRL STONE CL B	45	TONS
6015000000-E		1615	TEMPORARY MULCHING	1	ACR
6018000000-E		1620	SEED FOR TEMP SEEDING	50	LB
6021000000-E		1620	FERT FOR TEMP SEEDING	1.25	TONS
6029000000-E		SP	SAFETY FENCE	100	LF
6030000000-E		1630	SILT EXCAVATION	560	CY
6036000000-E		1631	MATTING FOR EROS CONTROL	5000	SY
6037000000-E		SP	COIR FIBER MAT	10	SY
6038000000-E		SP	PERM SOIL REINF MAT	25	SY
6042000000-E		1632	1/4" HARDWARE CLOTH	45	LF
6045000000-E		SP	24" TEMPORARY PIPE	120	LF
6070000000-N		1639	SPECIAL STILLING BASINS	1	EA
6071020000-E		SP	POLYACRYLAMIDE (PAM)	5	LB
6071030000-E		1640	COIR FIBER BAFFLE	135	LF
6071050000-E		SP	2" SKIMMER	1	EA
6084000000-E		1660	SEEDING AND MULCHING	0.5	ACRES
6087000000-E		1660	MOWING	0.5	ACRES
6090000000-E		1661	SEED FOR REPAIR SEEDING	50	LB
6093000000-E		1661	FERT FOR REPAIR SEEDING	0.25	TONS
6096000000-E		1662	SEED FOR SUPP SEEDING	50	LB
6108000000-E		1665	FERTILIZER TOPDRESSING	0.5	TONS
6111000000-E		SP	IMPERVIOUS DIKE	126	LF
6117000000-N		SP	RESPONSE FOR EROS CONTROL	25	EA
			STRUCTURAL ITEMS		
8035000000-E		402	REMOVAL OF EXISTING STRUCTURE	1	LS
8126000000-N		412	CULVERT EXCAVATION, STA 11+04.50	1	LS
8133000000-E		414	FOUNDATION CONDITIONING MATERIAL, BOX MATERIAL	64	TONS
8196000000-E		420	CLASS A CONCRETE (CULVERT)	104.2	CY
8245000000-E		425	REINFORCING STEEL (CULVERT)	13014	LBS
362800000-E		876	RIP RAP, CLASS I	80	TONS
862200000-E		876	GEOTEXTILE FOR DRAINAGE	97	SY

5/10/2013
C:\Projects\VP-0_1\GRAHAM63_rdy_psh3.dgn
mjlodaen

COMPUTED BY: MBL	DATE: 1-28-2013
CHECKED BY: MDL	DATE: 1-28-2013

STATE OF NORTH CAROLINA
DIVISION OF HIGHWAYS

PROJECT REFERENCE NO.	SHEET NO.
17BP.14.R.8	3A

EARTHWORK SUMMARY (CY)

LOCATION	UNCLASSIFIED EXCAVATION	EMBT + %	BORROW	WASTE
TEMPORARY WIDENING				
-L- STA. 10+50.00 TO -L- STA. 12+00.00	13	654	641	
SUBTOTAL SUMMARY	13	654	641	
-L- FINAL/TEMPORARY WIDENING REMOVAL				
-L- STA. 10+50.00 TO -L- STA. 12+00.00	127			127
SUBTOTAL SUMMARY	127			127
WASTE IN LIEU OF BORROW			-127	-127
PROJECT TOTAL	140	654	514	
ESTIMATE 5% FOR TOPSOIL ON BORROW PITS			26	
GRAND TOTAL	140	654	540	
SAY	140		540	

CONTINGENCY ITEMS:
UNDERCUT EXCAVATION - 50 CY
SELECT MATERIAL CLASS VI - 50 TONS
INCIDENTAL STONE BASE - 100 TONS
GEOTEXTILE SOIL STABILIZATION - 50 SY

SUMMARY OF EXISTING ASPHALT PAVEMENT REMOVAL

LINE	STATION	STATION	LOCATION	SY
-L- (TEMPORARY PAVEMENT)	10+09.00	12+47.00	RT	232
-L-	10+09.00	10+93.00	LT	35.56
			TOTAL	267.56
			SAY	270

NOTE: Earthwork quantities are calculated by the Roadway Design Unit. These earthwork quantities are based in part on subsurface data provided by the Geotechnical Engineering Unit.

Approximate quantities only. Unclassified Excavation, Borrow Excavation, Shoulder Borrow, Fine Grading, Clearing and Grubbing, Breaking of Existing Pavement, and Removal of Existing Pavement will be paid for at the contract lump sum price for "Grading".

NOTE: Invert Elevations are for Bid Purposes only and shall not be used for project construction stakeout.
See "Standard Specifications For Roads and Structures, Section 300-5".

LIST OF PIPES, ENDWALLS, ETC. (FOR PIPES 48" & UNDER)

STATION / SIZE / THICKNESS OR GAUGE	LOCATION (LT,RT, OR CL)	STRUCTURE NO. FROM	STRUCTURE NO. TO	TOP ELEVATION	INVERT ELEVATION	INVERT ELEVATION	SLOPE CRITICAL	DRAINAGE PIPE (RCP, CSP, CAAP, HDPE, or PVC) 12"	15"	18"	24"	30"	36"	42"	48"
10+00	RT	0401			1946.92	1944.30					64				
10+61															
PROJECT TOTALS											64				
SAY											64				

STATION	C.S. PIPE (UNLESS NOTED OTHRWISE) 12" .064	15" .064	18" .064	24" .064	24"	30" .079	30"	36" .079	36"	42" .109	42"	48" .109	48"	CLASS III R.C. PIPE (UNLESS OTHERWISE NOTED) 12"	15"	18"	24"	30"	36"	42"	48"
10+00																					
10+61																					
PROJECT TOTALS																					
SAY																					

STATION	15" SIDE DRAIN PIPE	18" SIDE DRAIN PIPE	24" SIDE DRAIN PIPE	ENDWALLS STD. 838.01, STD. 838.11 OR STD. 838.80 (UNLESS NOTED OTHERWISE) CU. YDS. R.C.P.	C.S.P.	QUANTITIES FOR DRAINAGE STRUCTURES PER EACH (0' THRU 5.0')	* TOTAL L.F. FOR PAY QUANTITY SHALL BE COL. 'A' + (1.3 X COL.'B') LIN. *FT. A 5.0' THRU 10.0'	B 10.0' AND ABOVE	C.B. STD. 840.01 OR STD. 840.02	FRAME, GRATES AND HOOD STANDARD 840.03 TYPE OF GRATE E	F	G	
10+00													
10+61													
PROJECT TOTALS													
SAY													

STATION	D.I. STD. 840.14 OR STD. 840.15	D.I. FRAME & GRATE STD. 840.16	G.D.I. TYPE "A" STD. 840.17 OR 840.26	G.D.I. TYPE "B" STD. 840.18 OR 840.27	G.D.I. TYPE "D" STD. 840.19 OR 840.28	G.D.I. FRAME WITH GRATE STD. 840.22	G.D.I. FRAME WITH TWO GRATES STD. 840.22	G.D.I. (N.S.) FRAME WITH GRATE STD. 840.24	G.D.I. (N.S.) FRAME WITH TWO GRATES STD. 840.24	J.B. STD. 840.31 OR 840.32								CORR. STEEL ELBOWS NO. & SIZE	CONC. COLLARS CL. "B" C.Y. STD 840.72	CONC. & BRICK PIPE PLUG, C.Y. STD. 840.71	PIPE REMOVAL LIN.FT.	REMARKS
10+00																					51	
10+61																					21	
PROJECT TOTALS																					72	
SAY																					72	

ABBREVIATIONS

C.B.	CATCH BASIN
N.D.I.	NARROW DROP INLET
D.I.	DROP INLET
G.D.I.	GRATED DROP INLET
G.D.I. (N.S.)	GRATED DROP INLET (NARROW SLOT)
J.B.	JUNCTION BOX
M.H.	MANHOLE
T.B.D.I.	TRAFFIC BEARING DROP INLET
T.B.J.B.	TRAFFIC BEARING JUNCTION BOX

6/21/00

5/1/2013
U:\Roadway\Proj\GRAHAM63_rdy_psh3A.dgn
mlundgren

PROJECT REFERENCE NO.	SHEET NO.
17BP14.R.8	4
R/W SHEET NO.	

ROADWAY DESIGN ENGINEER — NORTH CAROLINA PROFESSIONAL SEAL 025513 ENGINEER MICHAEL D. LINDGREN — 5/1/2013

HYDRAULICS ENGINEER — NORTH CAROLINA PROFESSIONAL SEAL 038141 ENGINEER ANTHONY WAYNE GRAHAM — 5/1/13

Stantec
Stantec Consulting
801 Jones Franklin Road
Suite 300
Raleigh, NC 27606
Tel. (919) 851-6866
Fax. (919) 851-7024
www.stantec.com
License No. F-0672

8/17/99

REVISIONS

-L-
PI Sta 11+64.06
△ = 9° 15' 09.9" (RT)
D = 10° 25' 02.7"
L = 88.82'
T = 44.51'
R = 550.00'
e = NC

EXISTING R/W

17' BST

EXISTING R/W

JERRY ADAMS AND WIFE, BONNIE ADAMS
DB 303 PG 822
"TRACT 3"
RECORDED PLAT MAP: DB 110 PG 438

002

SPECIAL CUT DITCH SEE DETAIL A

BEGIN PROJECT
-L- POT STA. 10+09.04
TIE TO EXISTING
KENNETH M. & JERRY K. ADAMS T/C

-L- 10+95.00 55.00' LT

AVOID FENCE OR RESET FENCE

-L- 10+82.00 27.84' LT

DO NOT DISTURB

3 SBW

MTL

+64.25 40'R

PDE

EAST BUFFALO CREEK

JS

-L- 11+30.00 65.00' LT

-L- 11+38.00 83.00' LT

-L- 11+72.00 71.20' LT

TDE

-L- 11+35.00 43.00' LT

-L- 11+60.00 24.19' LT

-L- 11+35.00 25.36' LT

*NOTE WATER LINE SHOWN AS PER PROPERTY OWNER

003

GARY DEAN ICENHOWER AND WIFE, BARBARA ANN ICENHOWER, WILLIAM BRENT ICENHOWER
DB 177 PG 383
"SECOND PARCEL"

END PROJECT
-L- PT STA. 12+04.94
MATCH EXISTING
PT Sta. 12+08.37

BM #2
-BL- STA 7+10.82
42.71 LEFT
ELEV. 1947.04'

MTL CANOPY

DIRECTIONAL

WELL HOUSE

4" PVC

DI

TOP 1946.36'

CONC STEPS

2SFD

EXISTING R/W

250 GAL MTL

POT Sta. 10+00.00

BM #1
-BYI- STA 6+26.19
46.00 RIGHT
ELEV. 1952.91'

GARY & BARBARA ICENHOWER
DB 177 PG 383

N 3° 07' 42.0" E

PC Sta. 11+19.55

-L- SR-1253 19' BST

-L- Sta.11+04.50
2@9'X6' RCBC

+54.94

+66.13 40'R

15" CMP

REMOVE

REMOVE 18" CMP

24" RCP-III

CL I RIP RAP

N 12° 22' 51.9" E

HOLLIES CREEK RD

RETAIN 15" CMP

45.00'

EXISTING R/W

POT Sta. 12+47.67

TIE TO EXISTING DITCH

15" CMP

SEPTIC TANK LINE DIRECTION UNKNOWN AS PER OWNER

ROY & WILAMAE WALDROUP

-BL-2

DETAIL A
SPECIAL CUT DITCH
(Not to Scale)

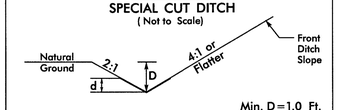

Min. D=1.0 Ft.
Max d=1.0 Ft.
Type of Liner= PSRM

FROM STA. 10+50 TO STA. 10+80 RT
FROM STA. 12+00 TO STA. 12+18 RT

DETAIL B
SPECIAL CUT DITCH
(Not to Scale)

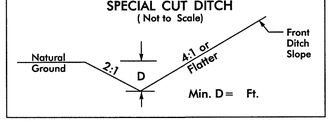

Min. D= Ft.

FROM STA. 11+17 TO STA. 12+00 RT

-L- 10+98.00 65.00' RT

-L- 10+44.29 50.00' RT

-L- 10+75.00 45.57' RT

-BL-1

-BYI-

-L- 10+85.00 65.00' RT

-L- 11+13.00 126.50' RT

-L- 10+66.14 138.01' RT

TDE

EAST BUFFALO CREEK RD

SR-1254

17' BST

60.00'

GR

12" CMP

RETAIN

EAST BUFFALO CREEK

JS

-L- 11+30.00 65.00' RT

-L- 11+30.00 37.66' RT

-L- 12+00.00 22.44' RT

SPECIAL CUT DITCH SEE DETAIL B

001

ROCKY & CRYSTAL WALDROUP AND WIFE, CRYSTAL WALDROUP
DB 261 PG 598
RECORDED PLAT MAP: PLAT CABINET DB @ SLIDE #1310

ALL RIGHT OF WAY AND EASEMENTS ARE DIMENSIONED FROM -L-
SEE SHEET S-1 THRU S-5 FOR CULVERT PLANS
SEE SHEET 5 FOR TEMPORARY WIDENING DETAIL
CONTRACTOR IS TO PROVIDE ADEQUATE SEPARATION B/T PROPOSED DITCH AND WING WALL TO PREVENT SCOUR AND EROSION

BEGIN GRADE
-L- STA.10+09.04
EL.1949.39

PI = 10+20.00
EL = 1,949.17'
VC = 20'
K = 6

PI = 10+55.00
EL = 1,947.27'
VC = 30'
K = 5

PI = 10+90.00
EL = 1,947.40'
VC = 40'
K = 10

PI = 11+35.00
EL = 1,945.70'
VC = 40'
K = 7

END GRADE
-L- STA.11+54.94
EL.1946.03

(-)12.0073%
(-)5.4286%
(+)0.3714%
(-)3.7778%
(+)1.6500%
(+)0.8000%
(+)2.1212%
(+)5.0000%

PROPOSED GRADE
EXISTING GROUND
50' FEATHER TO EXISTING

STA.10+50.00 RT
EL = 1944.30

STA.10+80.00 RT
EL = 1942.90

STA.11+17.00 RT
EL = 1943.00

PI = 11+50.00
EL = 1943.70

PI = 12+00.00
EL = 1944.10

STA.12+18.00 RT
EL = 1943.80

SPECIAL CUT DITCH

SPECIAL CUT DITCH

2@9'X6' RCBC @ PROPOSED INV.=1938.39

-L-

1,952
1,948
1,944
1,940
1,936
1,932

10+00
11+00
12+00

CULVERT HYDRAULIC DATA

DESIGN DISCHARGE	=	700	CFS
DESIGN FREQUENCY	=	25	YRS
DESIGN HW ELEVATION	=	1945.7	FT
BASE DISCHARGE	=	1000	CFS
BASE FREQUENCY	=	100	YRS
BASE HW ELEVATION	=	1946.78	FT
OVERTOPPING DISCHARGE	=	850	CFS
OVERTOPPING FREQUENCY	=	50	YRS
OVERTOPPING ELEVATION	=	1945.9	FT

5/1/2013
D:\Roadway\Proj\GRAHAM63_rdy_psh_4.dgn
mlindgren

PROJECT REFERENCE NO.	SHEET NO.
17BPJ4.R.8	5
R/W SHEET NO.	
ROADWAY DESIGN ENGINEER	HYDRAULICS ENGINEER

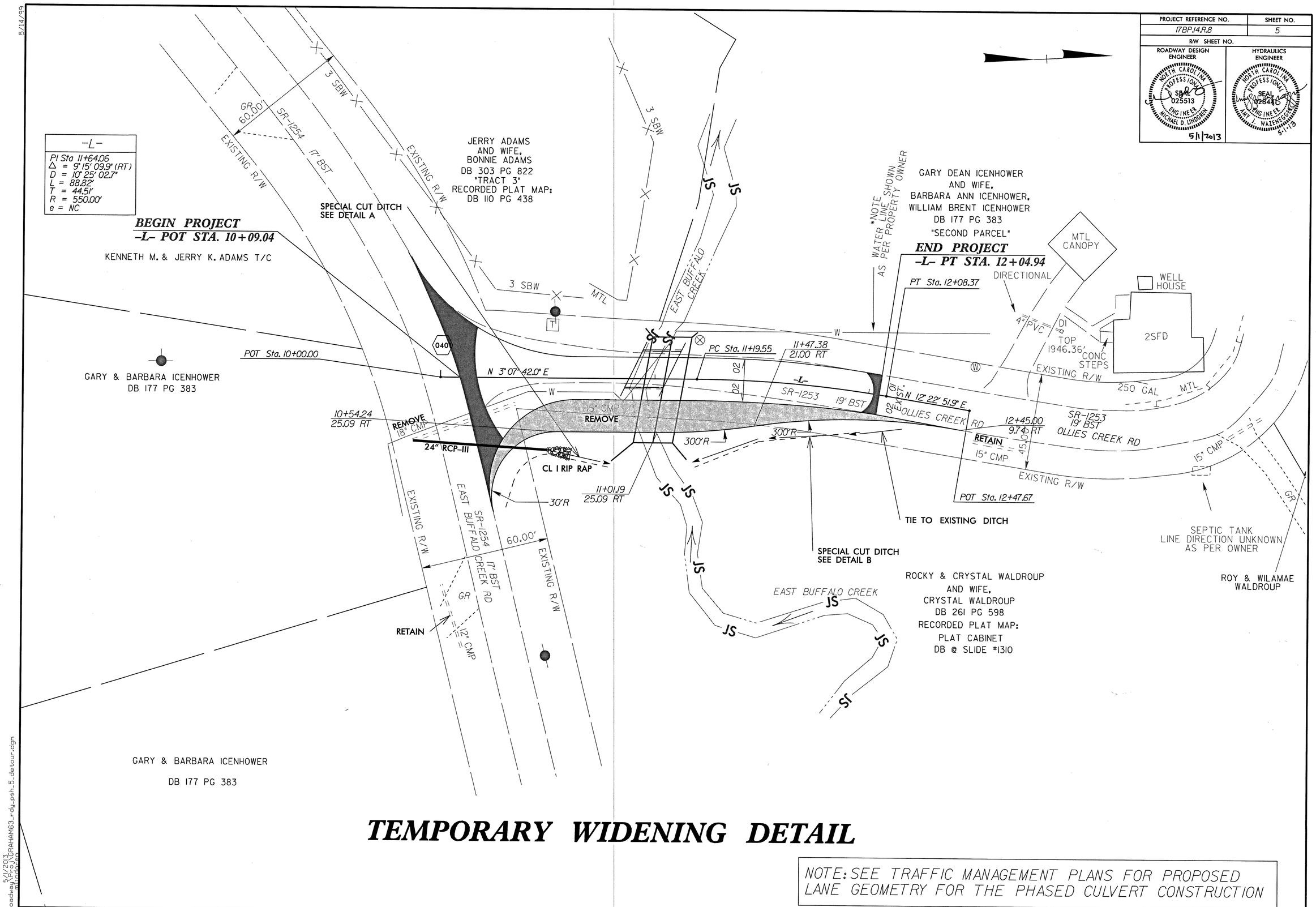

TEMPORARY WIDENING DETAIL

NOTE: SEE TRAFFIC MANAGEMENT PLANS FOR PROPOSED LANE GEOMETRY FOR THE PHASED CULVERT CONSTRUCTION

5/14/99

5/1/2013
\Roadway\Proj\GRAHAM63_rdy_psh_5_detour.dgn
mlindgren

STATE OF NORTH CAROLINA
DIVISION OF HIGHWAYS

TRANSPORTATION MANAGEMENT PLAN

GRAHAM COUNTY

DIVISION 14

BRIDGE #63 – Ollies Creek Road (SR 1253) over E. Buffalo Creek

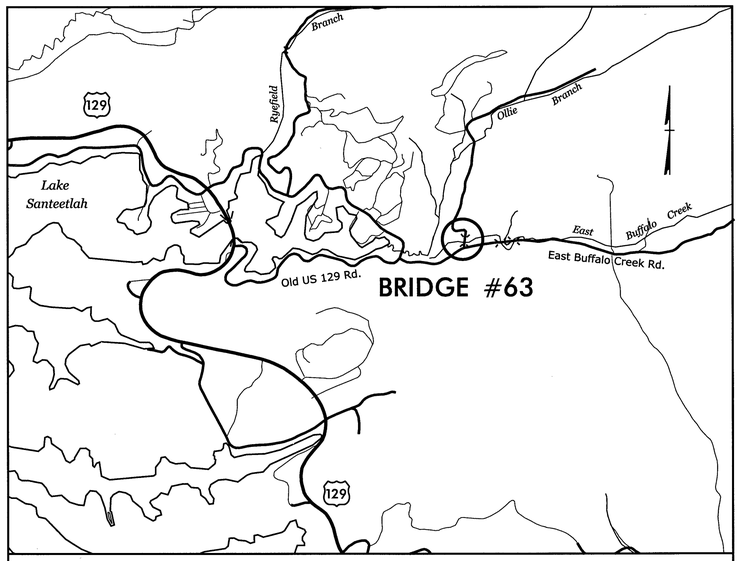

VICINITY MAP

WORK ZONE SAFETY & MOBILITY
"from the MOUNTAINS to the COAST"

PLAN PREPARED FOR NCDOT DIVISION 14

DIVISION OF HIGHWAYS * STATE OF NORTH CAROLINA * DEPARTMENT OF TRANSPORTATION * WORK ZONE TRAFFIC CONTROL

INDEX OF SHEETS

SHEET NO.	TITLE
TMP-1	TITLE SHEET AND INDEX OF SHEETS
TMP-1A	LEGEND AND LIST OF ROADWAY STANDARD DRAWINGS
TMP-2	GENERAL NOTES AND PHASING
TMP-3	PHASE I
TMP-4	PHASE II

TRAFFIC MANAGEMENT STRATEGY

BRIDGE REPLACEMENT WILL BE PERFORMED IN STAGES. SEE SHEET TMP-2 FOR PHASING.

PLAN PREPARED BY:
Stantec Consulting Services Inc.
801 Jones Franklin Road-Suite 300
Raleigh, NC 27606

Tel. 919.851.6866
Fax. 919.851.7024
www.stantec.com

BETSY L. WATSON, P.E.
TRAFFIC ENGINEER

GEORGE KARAGEORGE
WORK ZONE TRANSPORTATION DESIGN MANAGER

APPROVED: Betsy L Watson
DATE: April 29, 2013

NORTH CAROLINA PROFESSIONAL SEAL 29449 ENGINEER BETSY L. WATSON

SHEET NO.
TMP-1

WBS 17BP.14.R.8

4/29/2013
U:\Graham63\Traffic\TrafficControl\TCP\Plan Sheets\17BP.14.R.8_TC_TMP_01_TITLE.dgn
blaton

PROJ. REFERENCE NO.	SHEET NO.
17BP.14.R.8	TMP-1A

LEGEND

DIRECTION OF TRAFFIC FLOW

DIRECTION OF PEDESTRIAN TRAFFIC FLOW

WORK AREA

PAVEMENT REMOVAL

NORTH ARROW

TYPE III BARRICADE

CONE

DRUM

SKINNY DRUM

TUBULAR MARKER

CHANGEABLE MESSAGE SIGN (CMS)

FLAGGER

AUTOMATED FLAGGER ASSISTANCE DEVICE (AFAD)

FLASHING ARROW BOARD(TYPE C)

LAW ENFORCEMENT

TRUCK MOUNTED ATTENUATOR (TMA)

PORTABLE CONCRETE BARRIER (PCB)

TEMPORARY CRASH CUSHION

TEMPORARY SHORING

WORK ZONE SIGN-PORTABLE

WORK ZONE SIGN-STATIONARY

WORK ZONE SIGN-STATIONARY OR PORTABLE

SIGNALS

EXISTING

PROPOSED

TEMP

TEMPORARY

PAVEMENT MARKINGS

EXISTING PAVEMENT MARKING (GRAY)

SKIP LINES

MINI-SKIP LINES

SOLID LINES

PAVEMENT MARKING SYMBOLS

PAVEMENT MARKING SYMBOLS

EXISTING PAVEMENT MARKING SYMBOLS (HOLLOW)

ONLY PAVEMENT MARKING ALPHANUMERIC CHARACTERS

PAVEMENT MARKERS

CRYSTAL/CRYSTAL

CRYSTAL/RED

YELLOW/YELLOW

ROADWAY STANDARD DRAWINGS

THE FOLLOWING ROADWAY STANDARDS AS APPEAR IN "ROADWAY STANDARD DRAWINGS" - PROJECT SERVICES UNIT - N.C. DEPARTMENT OF TRANSPORTATION - RALEIGH, N.C., DATED JANUARY 2012 ARE APPLICABLE TO THIS PROJECT AND BY REFERENCE HEREBY ARE CONSIDERED A PART OF THESE PLANS:

STD. NO.	TITLE
1101.01	WORK ZONE ADVANCE WARNING SIGNS
1101.02	TEMPORARY LANE CLOSURES
1101.04	TEMPORARY SHOULDER CLOSURES
1101.11	TRAFFIC CONTROL DESIGN TABLES
1110.01	STATIONARY WORK ZONE SIGNS
1110.02	PORTABLE WORK ZONE SIGNS
1130.01	DRUMS
1135.01	CONES
1150.01	FLAGGING DEVICES
1160.01	TEMPORARY CRASH CUSHION
1165.01	WORK VEHICLE LIGHTING SYSTEMS AND TMA DELINEATION
1170.01	PORTABLE CONCRETE BARRIER
1205.01	PAVEMENT MARKINGS - LINE TYPES AND OFFSETS
1205.02	PAVEMENT MARKINGS - TWO LANE AND MULTILANE ROADWAYS
1205.12	PAVEMENT MARKINGS - BRIDGES
1250.01	RAISED PAVEMENT MARKERS - INSTALLATION SPACING
1251.01	RAISED PAVEMENT MARKERS - (PERMANENT AND TEMPORARY)

Stantec Consulting Services Inc.
801 Jones Franklin Road
Suite 300
Raleigh, NC 27606
Tel. (919) 851-6866
Fax. (919) 851-7024
www.stantec.com
License No. F-0672

APPROVED Betsy I Watson DATE 4/29/13

NORTH CAROLINA PROFESSIONAL SEAL 29449 ENGINEER BETSY I WATSON

DIVISION OF HIGHWAYS * STATE OF NORTH CAROLINA * DEPARTMENT OF TRANSPORTATION * WORK ZONE TRAFFIC CONTROL

LEGEND
&
ROADWAY STANDARD DRAWINGS

4/29/2013
U:\Graham63\Traffic\TrafficControl\TCP\Plan Sheets\17BP.14.R.8_TC_TMP_01A_RDWYSTDSLEGEND.dgn
blaton

PROJ. REFERENCE NO.	SHEET NO.
17BP.14.R.8	TMP-2

GENERAL NOTES

THE FOLLOWING GENERAL NOTES APPLY AT ALL TIMES FOR THE DURATION OF THE PROJECT EXCEPT WHEN OTHERWISE NOTED IN THE PLAN OR DIRECTED BY THE ENGINEER.

CHANGES MAY BE REQUIRED WHEN PHYSICAL DIMENSIONS IN THE DETAIL DRAWINGS, STANDARD DETAILS, AND ROADWAY DETAILS ARE NOT ATTAINABLE TO MEET FIELD CONDITIONS OR RESULT IN DUPLICATE OR UNDESIRED OVERLAPPING OF DEVICES. MODIFICATION MAY INCLUDE: MOVING, SUPPLEMENTING, COVERING, OR REMOVAL OF DEVICES AS DIRECTED BY THE ENGINEER.

LANE AND SHOULDER CLOSURE REQUIREMENTS

A) LANE CLOSURES ARE REQUIRED WHEN PERSONNEL AND/OR EQUIPMENT ARE WORKING WITHIN ANY PORTION OF A TRAVEL LANE. CONDUCT THE WORK SO THAT ALL PERSONNEL AND/OR EQUIPMENT REMAIN WITHIN THE CLOSED TRAVEL LANE.

B) INSTALL ALL LANE CLOSURES ACCORDING TO THE PLANS, ROADWAY STANDARD DRAWINGS (1101.02), OR AS DIRECTED BY THE ENGINEER.

C) REMOVE LANE CLOSURE DEVICES FROM THE LANE WHEN WORK IS NOT BEING PERFORMED BEHIND THE LANE CLOSURE OR WHEN A LANE CLOSURE IS NO LONGER NEEDED OR AS DIRECTED BY THE ENGINEER. COVER OR LAY DOWN SIGNS, AND TURN OFF ARROW BOARDS AND MESSAGE BOARDS.

D) WHEN PERSONNEL AND/OR EQUIPMENT ARE WORKING ON THE SHOULDER ADJACENT TO AN UNDIVIDED FACILITY AND WITHIN 5 FT OF AN OPEN TRAVEL LANE, CLOSE THE NEAREST OPEN TRAVEL LANE UNLESS THE WORK AREA IS PROTECTED BY BARRIER OR GUARDRAIL.

E) WHEN PERSONNEL AND/OR EQUIPMENT ARE WORKING ON THE SHOULDER ADJACENT TO A DIVIDED FACILITY AND WITHIN 10 FT OF AN OPEN TRAVEL LANE, CLOSE THE NEAREST OPEN TRAVEL LANE UNLESS THE WORK AREA IS PROTECTED BY BARRIER OR GUARDRAIL.

TEMPORARY SHORING

F) FOR TEMPORARY SHORING, SEE TEMPORARY SHORING SPECIAL PROVISION.

G) FOR CONTRACTOR DESIGNED SHORING, SURVEY THE SHORING LOCATION TO DETERMINE EXISTING ELEVATIONS AND ACTUAL DESIGN HEIGHTS BEFORE BEGINNING DESIGN.

H) WHEN USING CONTRACTOR DESIGNED SHORING USE THE SOIL PARAMETERS SPECIFIED IN THE TEMPORARY SHORING SPECIAL PROVISION AND DETAILS.

I) NO SUBSURFACE INFORMATION IS AVAILABLE IN THE VICINITY OF THE TEMPORARY SHORING. THE INFORMATION PROVIDED FOR DESIGN WAS ASSUMED AND MAY NOT BE APPLICABLE TO THE ACTUAL SITE CONDITIONS ENCOUNTERED DURING CONSTRUCTION.

TEMPORARY TRAFFIC BARRIER

J) INSTALL TEMPORARY BARRIER ACCORDING TO THE PLANS A MAXIMUM OF ONE(1) WEEK PRIOR TO BEGINNING WORK IN ANY LOCATION. ONCE TEMPORARY BARRIER IS INSTALLED, PROCEED IN A CONTINUOUS MANNER TO COMPLETE THE PROPOSED WORK IN THAT LOCATION, UNLESS OTHERWISE STATED IN THE PLANS OR DIRECTED BY THE ENGINEER.

K) DO NOT PLACE BARRIER DIRECTLY ON ANY SURFACE OTHER THAN ASPHALT OR CONCRETE.

L) PROTECT THE APPROACH END OF PORTABLE CONCRETE BARRIER AT ALL TIMES DURING THE INSTALLATION AND REMOVAL OF THE BARRIER BY EITHER A TRUCK MOUNTED ATTENUATOR (MAXIMUM 72 HOURS) OR A TEMPORARY CRASH CUSHION.

MISCELLANEOUS

M) ALL DIMENSIONS AND STATIONS IN THE TRANSPORTATION MANAGEMENT PLAN AND PHASING ARE APPROXIMATE (+/-); FIELD ADJUST AS NECESSARY OR AS DIRECTED BY THE ENGINEER.

N) COMPLETE ANY PROPOSED OR TEMPORARY WIDENING IN SUCH A MANNER THAT PONDING OF WATER WILL NOT OCCUR IN THE TRAVEL LANE.

O) ENSURE THE OVERSIZE/OVERWEIGHT PERMIT UNIT (919) 733-4740 HAS BEEN ADVISED OF THE ONGOING TRAFFIC OPERATIONS THROUGH THE DIVISION OFFICE.

PHASING

PHASE I

STEP 1:

INSTALL WORK ZONE ADVANCE WARNING SIGNS PER SHEET TMP-3 AND ROADWAY STANDARD DRAWING 1101.01 SHEET 3.

STEP 2:

USING FLAGGING OPERATIONS PER ROADWAY STANDARD DRAWING 1101.02 SHEET 1: REMOVE EXISTING DRAINAGE AND INSTALL PROPOSED DRAINAGE. RETURN TRAFFIC TO 2-LANE, 2-WAY TRAFFIC ON BUFFALO CREEK ROAD AT THE END OF EACH WORK DAY DURING DRAINAGE WORK. INSTALL ANCHORED TEMPORARY BARRIER AND CRASH CUSHIONS (TMP-3).

STEP 3:

CONSTRUCT CULVERT STAGE I AND APPROACHES UP TO BUT NOT INCLUDING THE FINAL LAYER OF SURFACE COURSE.

PHASE II

STEP 1:

USING A FLAGGING OPERATION PER ROADWAY STANDARD DRAWING 1101.02 SHEET 1, REMOVE AND RESET PREVIOUSLY PLACED PORTABLE CONCRETE BARRIER AND CRASH CUSHIONS. PLACE MARKINGS AND SHIFT SR 1253 TRAFFIC ONTO THE PORTION OF THE COMPLETED CULVERT (STAGE I).

STEP 2:

REMOVE EXISTING BRIDGE AND CONSTRUCT REMAINING CULVERT (STAGE II) AND APPROACHES UP TO BUT NOT INCLUDING THE FINAL LAYER OF SURFACE COURSE (TMP-4).

STEP 3:

USING A FLAGGING OPERATION PER ROADWAY STANDARD DRAWING 1101.02 SHEET 1, REMOVE TEMPORARY WIDENING, TEMPORARY BARRIER AND PAVE THE FINAL LAYER OF SURFACE COURSE AND PLACE FINAL MARKINGS.

Stantec
Stantec Consulting Services Inc.
801 Jones Franklin Road
Suite 300
Raleigh, NC 27606
Tel. (919) 851-6866
Fax. (919) 851-7024
www.stantec.com
License No. F-0672

APPROVED Betsy L. Watson DATE: 4/29/13

NORTH CAROLINA PROFESSIONAL SEAL 29449 ENGINEER BETSY L. WATSON

DIVISION OF HIGHWAYS · STATE OF NORTH CAROLINA · DEPARTMENT OF TRANSPORTATION · WORK ZONE TRAFFIC CONTROL

GENERAL NOTES & PHASING

4/29/2013
U:\Graham63\TrafficControl\TCP\Plan Sheets\17BP.14.R.8_TC_TMP_02_ GENERALNOTES.dgn
blaton

PROJ. REFERENCE NO.	SHEET NO.
17BP.14.R.8	TMP-3

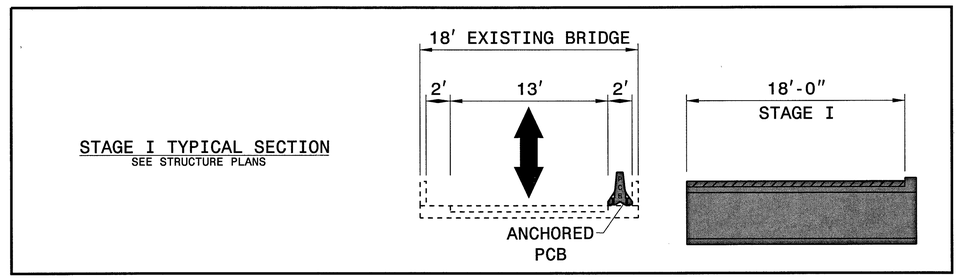

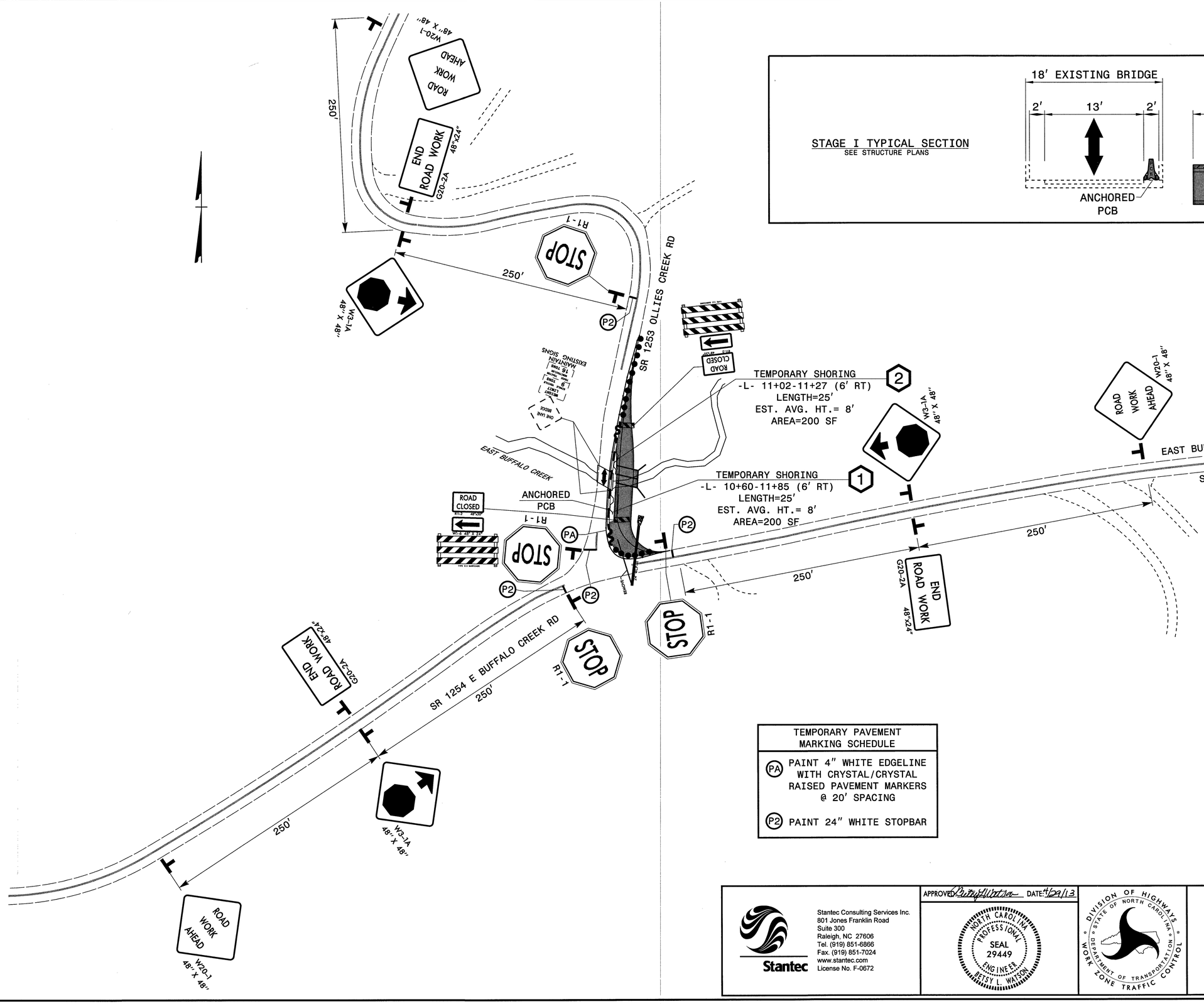

TEMPORARY PAVEMENT MARKING SCHEDULE
(PA) PAINT 4″ WHITE EDGELINE WITH CRYSTAL/CRYSTAL RAISED PAVEMENT MARKERS @ 20′ SPACING
(P2) PAINT 24″ WHITE STOPBAR

Stantec Consulting Services Inc.
801 Jones Franklin Road
Suite 300
Raleigh, NC 27606
Tel. (919) 851-6866
Fax. (919) 851-7024
www.stantec.com
License No. F-0672

APPROVED _____ DATE: 4/29/13

NORTH CAROLINA PROFESSIONAL SEAL 29449 ENGINEER BETSY L. WATSON

DIVISION OF HIGHWAYS — STATE OF NORTH CAROLINA — DEPARTMENT OF TRANSPORTATION — WORK ZONE TRAFFIC CONTROL

PHASE I

4/29/2013
U:\Gr\dncm63\Traffic\TrafficControl\TCP\Plan Sheets\17BP.14.R.8_TC_TMP_03_PHASE_I.dgn
blaton

PROJ. REFERENCE NO.	SHEET NO.
17BP.14.R.8	TMP-4

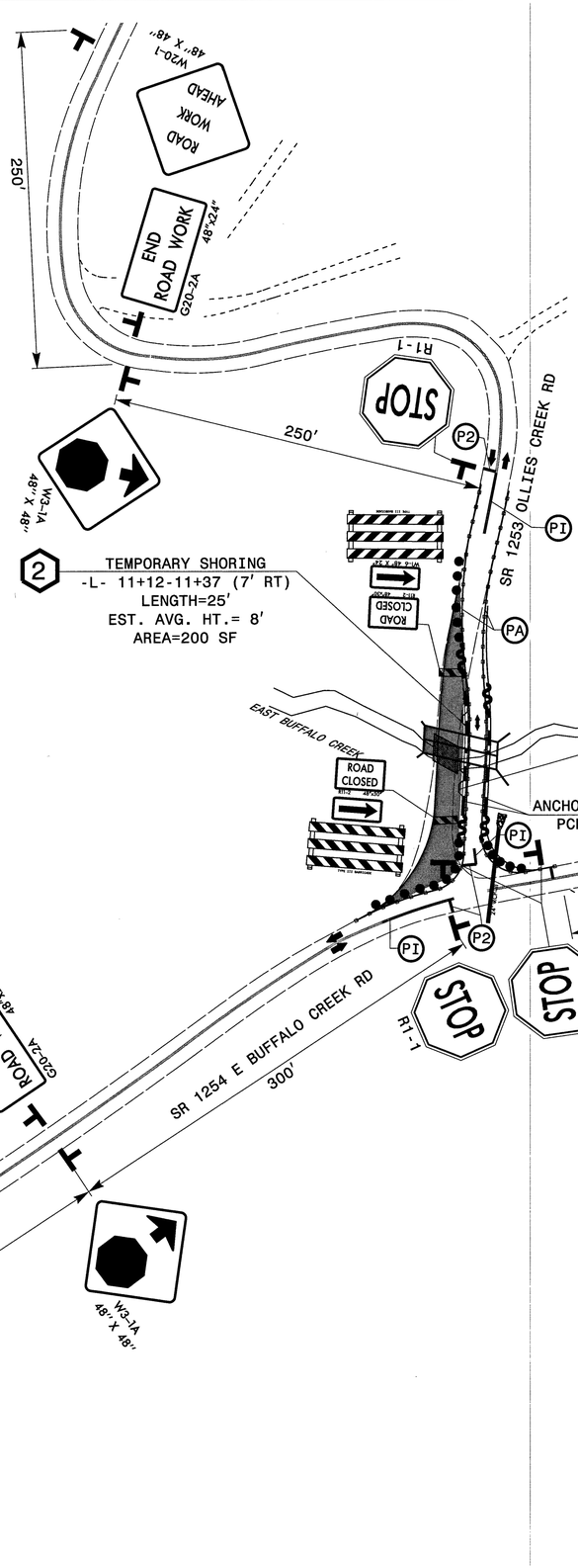

STAGE II TYPICAL SECTION
SEE STRUCTURE PLANS

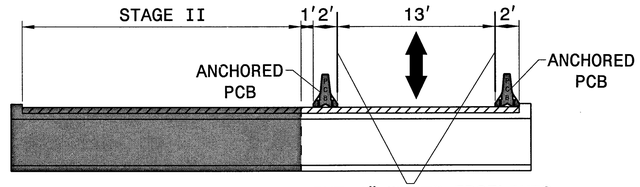

TEMPORARY PAVEMENT MARKING SCHEDULE
(PA) PAINT 4" WHITE EDGELINE WITH CRYSTAL/CRYSTAL RAISED PAVEMENT MARKERS @ 20' SPACING
(P2) PAINT 24" WHITE STOPBAR
(PI) PAINT 4" YELLOW DOUBLE CENTER

Stantec
Stantec Consulting Services Inc.
801 Jones Franklin Road
Suite 300
Raleigh, NC 27606
Tel. (919) 851-6866
Fax. (919) 851-7024
www.stantec.com
License No. F-0672

APPROVED: Betsy L Watson DATE: 4/29/13

NORTH CAROLINA PROFESSIONAL SEAL 29449 ENGINEER BETSY L. WATSON

DIVISION OF HIGHWAYS
STATE OF NORTH CAROLINA
DEPARTMENT OF TRANSPORTATION
WORK ZONE TRAFFIC CONTROL

PHASE II

4/29/2013
U:\Graham63\Traffic\TrafficControl\TCP\Plan Sheets\17BP.14.R.8_TC_TMP_04_PHASE_II.dgn
blaton

CONTRACT NO.: DN00141 PROJECT: 17BP.14.R.8

STATE OF NORTH CAROLINA
DEPARTMENT OF TRANSPORTATION

PROJECT NO.	SHEET NO.
17BP.14.R.8	PMP-1

APPROVED: Betsy L Watson

DATE: 1/23/13

SEAL

NORTH CAROLINA PROFESSIONAL SEAL 29449 ENGINEER BETSY L. WATSON

Stantec Consulting Services Inc.
801 Jones Franklin Road
Suite 300
Raleigh, NC 27606
Tel. (919) 851-6866
Fax. (919) 851-7024
www.stantec.com
License No. F-0672

PAVEMENT MARKING PLAN
GRAHAM COUNTY
LOCATION: BRIDGE NO. 63 ON SR 1253 (OLLIES CREEK ROAD) OVER EAST BUFFALO CREEK

ROADWAY STANDARD DRAWINGS

THE FOLLOWING ROADWAY STANDARDS AS APPEAR IN "ROADWAY STANDARD DRAWINGS" - PROJECT SERVICES UNIT - N.C. DEPARTMENT OF TRANSPORTATION - RALEIGH, N.C., DATED JANUARY 2012 ARE APPLICABLE TO THIS PROJECT AND BY REFERENCE HEREBY ARE CONSIDERED A PART OF THESE PLANS:

STD. NO.	TITLE
1205.01	PAVEMENT MARKINGS - LINE TYPES & OFFSETS
1205.02	PAVEMENT MARKINGS - 2 LANE & MULTILANE ROADWAYS
1205.12	PAVEMENT MARKINGS - BRIDGES

GENERAL NOTES

THE FOLLOWING GENERAL NOTES APPLY AT ALL TIMES FOR THE DURATION OF THE CONSTRUCTION PROJECT, EXCEPT WHEN OTHERWISE NOTED IN THE PLAN, OR DIRECTED BY THE ENGINEER.

A) INSTALL PAVEMENT MARKINGS AND PAVEMENT MARKERS ON THE FINAL SURFACE AS FOLLOWS:

ROAD NAME	MARKING	MARKER
OLLIES CREEK RD	PAINT	NONE

B) PLACE TWO APPLICATIONS OF PAINT PAVEMENT MARKINGS ON THE FINAL WEARING SURFACE. PLACE THE SECOND APPLICATION OF PAINT UPON SUFFICIENT DRYING TIME OF THE FIRST.

C) TIE PROPOSED PAVEMENT MARKING LINES TO EXISTING PAVEMENT MARKING LINES.

D) REMOVE/REPLACE ANY CONFLICTING/DAMAGED PAVEMENT MARKINGS AND MARKERS.

E) PASSING ZONES WILL BE DETERMINED IN THE FIELD AND MUST BE APPROVED BY THE ENGINEER.

F) REMOVE ALL RESIDUE AND SURFACE LAITANCE BY ACCEPTABLE METHODS OF THE BRIDGE DECK(s) PRIOR TO PLACING (PAINT) PAVEMENT MARKING.

FINAL PAVEMENT MARKING SCHEDULE

SYMBOL	DESCRIPTION		PAY ITEM
P2	WHITE STOPBAR	(24")	PAINT
P8	2 FT - 6 FT/SP WHITE MINISKIP	(4")	PAINT
PA	WHITE EDGELINE	(4")	PAINT
PI	YELLOW DOUBLE CENTER	(4")	PAINT

PAVEMENT MARKING DETAIL

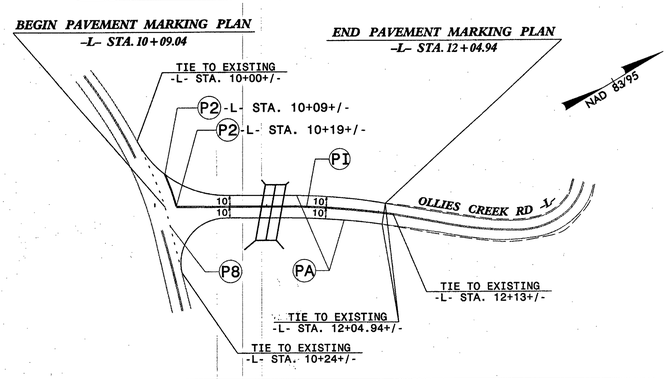

PLAN PREPARED BY:

BETSY L. WATSON, P.E. TRAFFIC ENGINEER

ROSI R. HENNEIN TRANSPORTATION TECHNICIAN

Stantec Consulting Services Inc.
801 Jones Franklin Road
Suite 300
Raleigh, NC 27606
Tel. (919) 851-6866
Fax. (919) 851-7024
www.stantec.com
License No. F-0672

INDEX

SHEET NO.	DESCRIPTION
PMP-1	PAVEMENT MARKING PLAN TITLE, SCHEDULE SHEET, AND PAVEMENT MARKING DETAIL

EROSION CONTROL PLAN

NAD 83

NOTES: ANY DEVIATION FROM OPTIONS GIVEN WILL REQUIRE PRIOR APPROVAL BY ENGINEER.

ADDITIONAL EROSION CONTROL DEVICES MAY NEED TO BE INSTALLED AS DIRECTED BY THE ENGINEER.

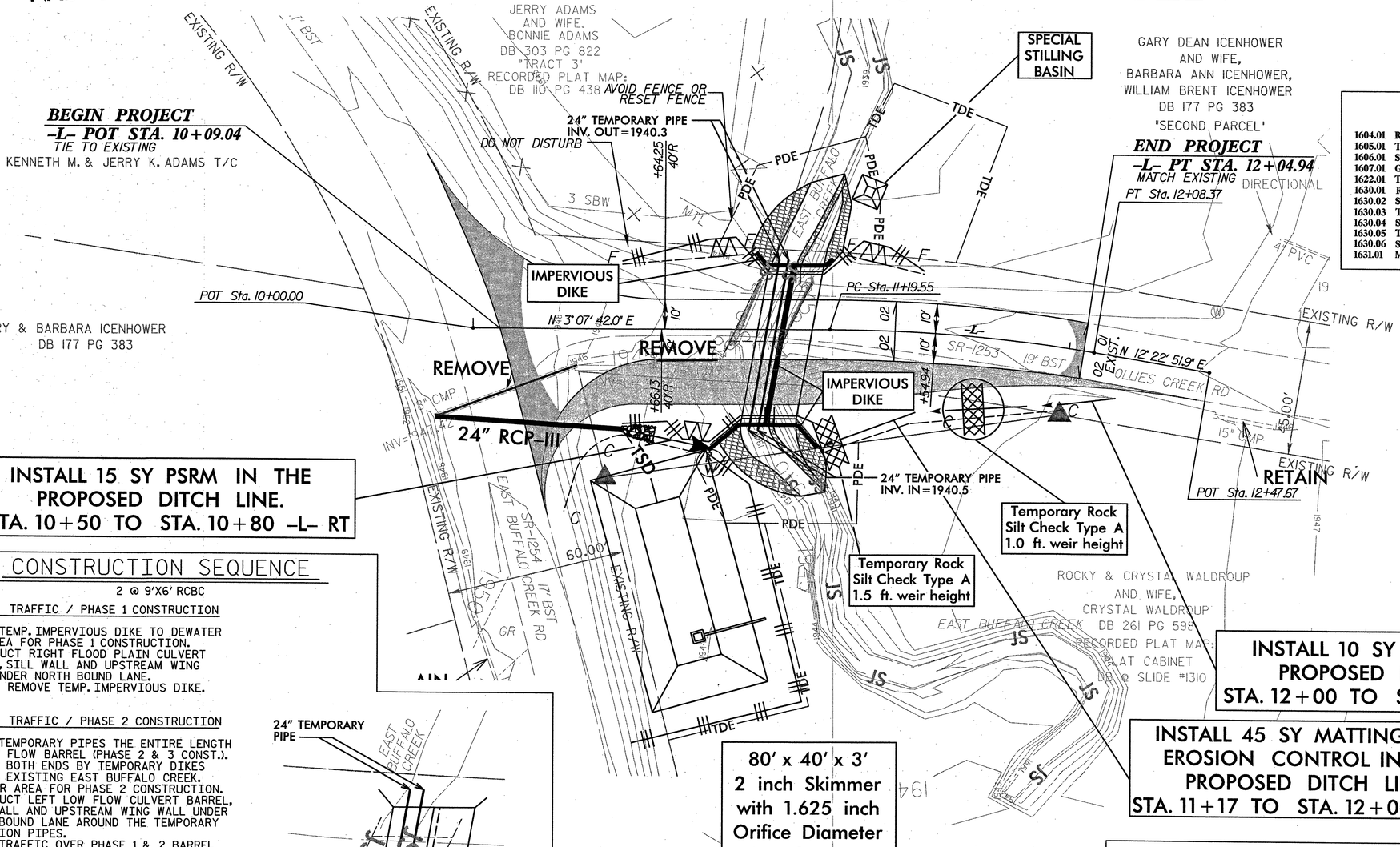

2012 STANDARD DRAWINGS

1604.01	Railroad Erosion Control Detail	1632.01	Rock Inlet Sediment Trap Type A
1605.01	Temporary Silt Fence	1632.02	Rock Inlet Sediment Trap Type B
1606.01	Special Sediment Control Fence	1632.03	Rock Inlet Sediment Trap Type C
1607.01	Gravel Construction Entrance	1633.01	Temporary Rock Silt Check Type A
1622.01	Temporary Berms and Slope Drains	1633.02	Temporary Rock Silt Check Type B
1630.01	Riser Basin	1634.01	Temporary Rock Sediment Dam Type A
1630.02	Silt Basin Type B	1634.02	Temporary Rock Sediment Dam Type B
1630.03	Temporary Silt Ditch	1635.01	Rock Pipe Inlet Sediment Trap Type A
1630.04	Stilling Basin	1635.02	Rock Pipe Inlet Sediment Trap Type B
1630.05	Temporary Diversion	1640.01	Coir Fiber Baffle
1630.06	Special Stilling Basin	1645.01	Temporary Stream Crossing
1631.01	Matting Installation		

EROSION AND SEDIMENT CONTROL MEASURES

Std. #	Description	Symbol
1630.03	Temporary Silt Ditch	TSD
1605.01	Temporary Silt Fence	
1606.01	Special Sediment Control Fence	
1633.01	Temporary Rock Silt Check Type-A	
	Temporary Rock Silt Check Type-A with Matting and Polyacrylamide (PAM)	
1633.02	Temporary Rock Silt Check Type-B	
1630.06	Special Stilling Basin	
	Rock Inlet Sediment Trap:	
	Skimmer Basin	

CONSTRUCTION SEQUENCE

2 @ 9'X6' RCBC

STAGE I TRAFFIC / PHASE 1 CONSTRUCTION

1. PLACE TEMP. IMPERVIOUS DIKE TO DEWATER THE AREA FOR PHASE 1 CONSTRUCTION.
2. CONSTRUCT RIGHT FLOOD PLAIN CULVERT BARREL, SILL WALL AND UPSTREAM WING WALL UNDER NORTH BOUND LANE.
3. DO NOT REMOVE TEMP. IMPERVIOUS DIKE.

STAGE I TRAFFIC / PHASE 2 CONSTRUCTION

1. PLACE TEMPORARY PIPES THE ENTIRE LENGTH OF LOW FLOW BARREL (PHASE 2 & 3 CONST.).
2. ANCHOR BOTH ENDS BY TEMPORARY DIKES ACROSS EXISTING EAST BUFFALO CREEK.
3. DEWATER AREA FOR PHASE 2 CONSTRUCTION.
4. CONSTRUCT LEFT LOW FLOW CULVERT BARREL, SILL WALL AND UPSTREAM WING WALL UNDER NORTH BOUND LANE AROUND THE TEMPORARY DIVERSION PIPES.
5. SHIFT TRAFFIC OVER PHASE 1 & 2 BARREL SECTIONS.

STAGE II TRAFFIC / PHASE 3 CONSTRUCTION

1. DECONSTRUCT EXISTING BRIDGE.
2. DEWATER THE AREA FOR PHASE 3 CONSTRUCTION AROUND THE TEMPORARY DIVERSION PIPES.
3. CONSTRUCT LEFT LOW FLOW CULVERT BARREL, SILL WALL AND UPSTREAM WING WALLL UNDER SOUTH BOUND LANE AROUND THE TEMPORARY DIVERSION PIPES.
4. REMOVE TEMPORARY PIPES AND TEMPORARY IMPERVIOUS DIKES UP AND DOWNSTREAM OF PHASE 2 AND 3 CONSTRUCTION.

STAGE II TRAFFIC / PHASE 4 CONSTRUCTION

1. PLACE TEMPORARY IMPERVIOUS DIKES TO DEWATER AREA FOR PHASE 4 CONSTRUCTION.
2. ROUTE FLOW THROUGH LOW FLOW BARREL IN AREA OF PHASE 2 & 3 CONSTRUCTION.
3. CONSTRUCT THE RIGHT FLOOD PLAIN CULVERT BARREL, SILL WALL AND UPSTREAM WING WALL 3 UNDER THE SOUTH BOUND LANE.
4. REMOVE TEMPORARY IMPERVIOUS DIKES AND DIVERSION PIPES.

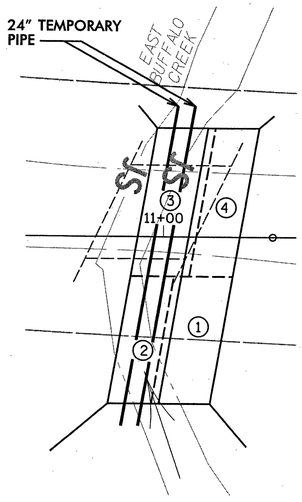

EROSION CONTROL ENGINEER
NORTH CAROLINA PROFESSIONAL SEAL 038621 ENGINEER ANDREW M. HOWELL
3-1-13

ANDREW M. HOWELL
LEVEL IIIA NAME

3105
LEVEL IIIA CERTIFICATION NO.

ROADSIDE ENVIRONMENTAL UNIT
DEPARTMENT OF TRANSPORTATION
DIVISION OF HIGHWAYS
RALEIGH, N.C.

2012 STANDARD SPECIFICATIONS

THESE EROSION AND SEDIMENT CONTROL PLANS COMPLY WITH THE REGULATIONS SET FORTH BY THE NCG-010000 GENERAL CONSTRUCTION PERMIT EFFECTIVE AUGUST 3, 2011 ISSUED BY THE NORTH CAROLINA DEPARTMENT OF ENVIRONMENT AND NATURAL RESOURCES DIVISION OF WATER QUALITY.

WSP · SELLS
Transportation & Infrastructure
15401 Weston Parkway Suite 100
Cary, NC 27513 - 919.678.0035
www.wspsells.com
LICENSE NO. F-0891

PROJECT NO. 17BP.14.R.8

GRAHAM COUNTY

STATION: 11+04.50 -L-

REPLACES BRIDGE No. 63

STATE OF NORTH CAROLINA
DEPARTMENT OF TRANSPORTATION
RALEIGH

BRIDGE ON SR 1253
OVER
EAST BUFFALO CREEK

32' SHLD. POINT TO SHLD. POINT 100° SKEW

REVISIONS						SHEET NO.
NO.	BY:	DATE:	NO.	BY:	DATE:	EC-1
1	AMH	12-12-12	3	AMH	3-1-13	TOTAL SHEETS
2	AMH	1-24-13	4			4

$$$$$$SYSTIME$$$$$
$$$$$$$$$$$$$$$$$$$$$$$$DGN$$$$$$$$$$$$$$$$$$$$$$$$
$$$$USERNAME$$$$

PROJECT REFERENCE NO.	SHEET NO.
17BPJ4.R8	EC-2
R/W SHEET NO.	

SKIMMER BASIN WITH BAFFLES DETAIL

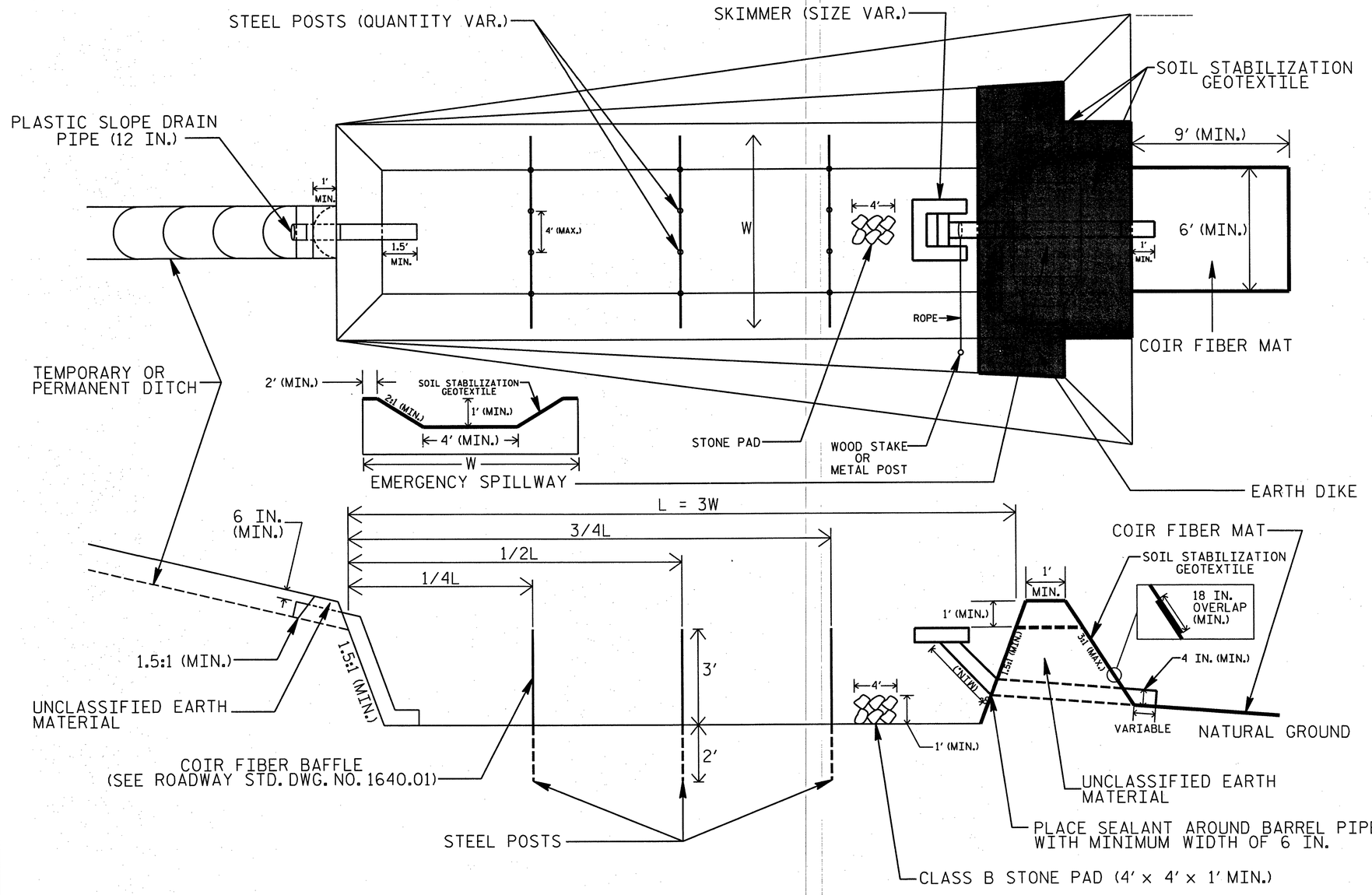

2" x 2" (nominal) WOODEN STAKE

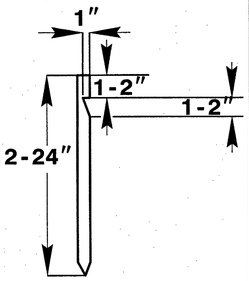

#10 STEEL REINFORCEMENT BAR

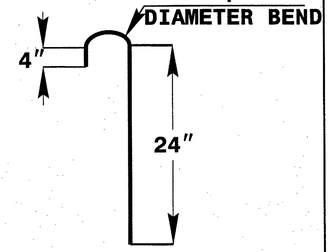

1" (nominal) STAPLE

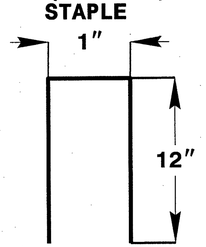

COIR FIBER MAT ANCHOR OPTIONS

NOTES

1. SEED AND PLACE MATTING FOR EROSION CONTROL ON INTERIOR AND EXTERIOR SIDESLOPES.
2. LIMIT EARTH DIKE HEIGHT TO 5 FT.
3. FOR BASIN DEPTH OF 3 FT., THE MINIMUM BASIN WIDTH SHALL BE 9 FT.
4. DETERMINE EMERGENCY SPILLWAY WEIR LENGTH (FT.) USING Q/0.8, WHERE Q IS FLOW RATE (CFS) INTO BASIN.
5. PLASTIC SLOPE DRAIN PIPE AT INLET OF BASIN MAY BE REPLACED BY FILTRATION GEOTEXTILE OR TARP AS DIRECTED.
6. SOIL STABILIZATION GEOTEXTILE FOR EMERGENCY SPILLWAY SHALL BE ONE CONTINUOUS PIECE OF MATERIAL OR OVERLAPPED 18 IN. (MIN.).

NOT TO SCALE

PROJECT REFERENCE NO.	SHEET NO.
17BPJ4.RB	EC-3
R/W SHEET NO.	

TEMPORARY ROCK SILT CHECK TYPE 'A' WITH EXCELSIOR MATTING AND POLYACRYLAMIDE (PAM)

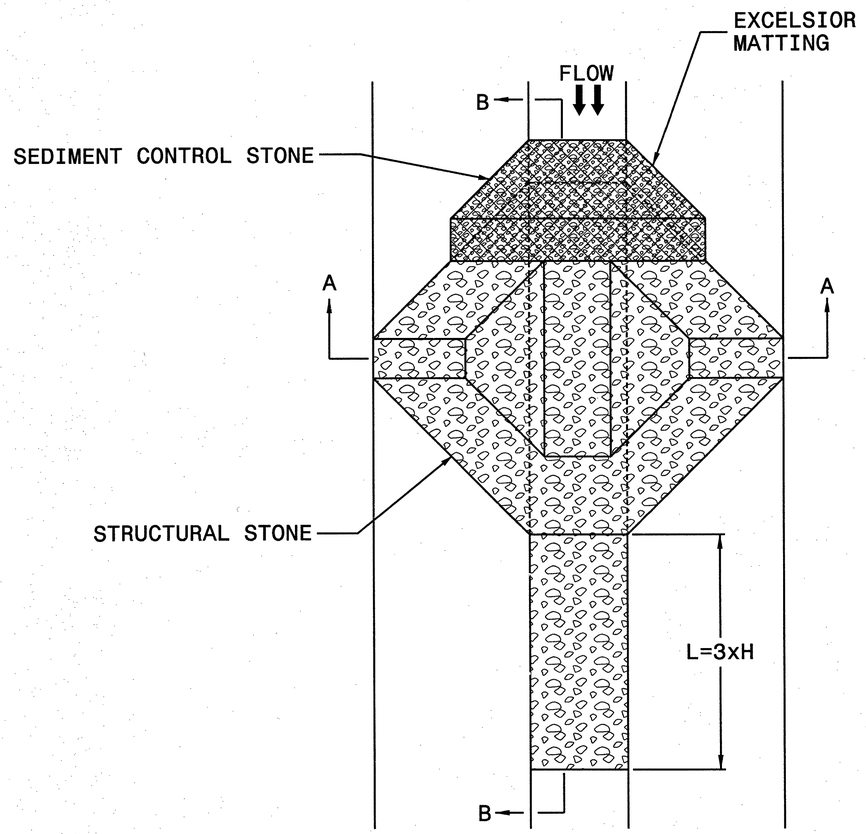

PLAN

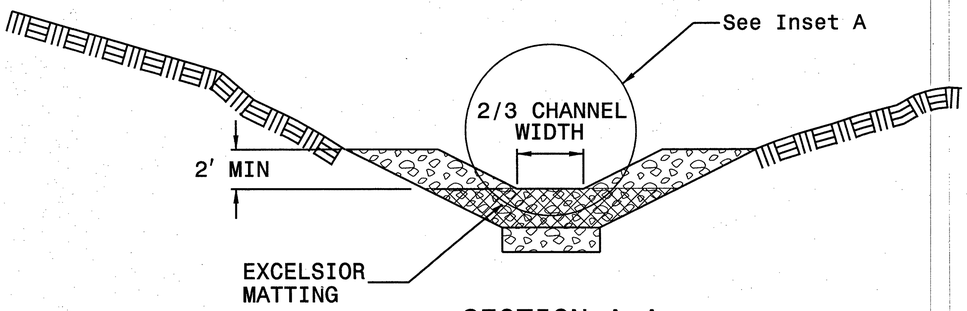

SECTION A-A

NOTES

USE EXCELSIOR FOR MATTING MATERIAL AND ANCHOR MATTING SECTION AT TOP AND BOTTOM WITH CLASS B STONE.

PRIOR TO POLYACRYLAMIDE (PAM) APPLICATION, OBTAIN A SOIL SAMPLE FROM PROJECT LOCATION, AND FROM OFFSITE MATERIAL, AND ANALYZE FOR APPROPRIATE PAM FLOCCULANT TO BE APPLIED TO EACH ROCK SILT CHECK.

INITIALLY APPLY 3.5 OUNCES OF POLYACRYLAMIDE (PAM) TO TOP OF MATTING SECTION AND AFTER EVERY RAINFALL EVENT THAT EQUALS OR EXCEEDS 0.50 INCHES.

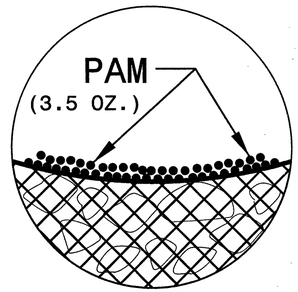

INSET A

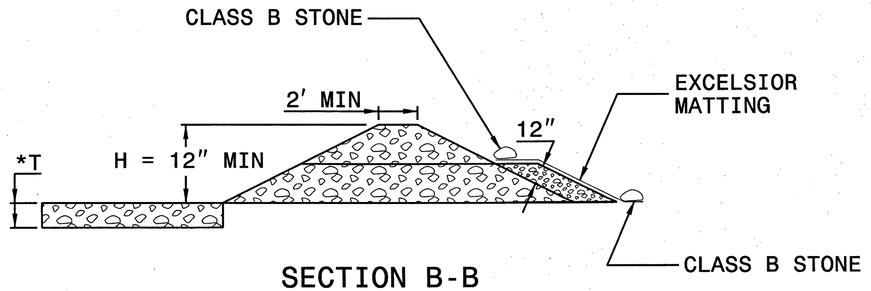

SECTION B-B

*T = 12" MIN., 18" MAX.

NOT TO SCALE

PROJECT REFERENCE NO.	SHEET NO.
17BP.14.R.8	EC-4

DIVISION OF HIGHWAYS
STATE OF NORTH CAROLINA

SOIL STABILIZATION TIMEFRAMES

SITE DESCRIPTION	*STABILIZATION TIME*	*TIMEFRAME EXCEPTIONS*
PERIMETER DIKES, SWALES, DITCHES AND SLOPES	7 DAYS	NONE
HIGH QUALITY WATER (HQW) ZONES	7 DAYS	NONE
SLOPES STEEPER THAN 3:1	7 DAYS	IF SLOPES ARE 10' OR LESS IN LENGTH AND ARE NOT STEEPER THAN 2:1, 14 DAYS ARE ALLOWED.
SLOPES 3:1 OR FLATTER	14 DAYS	7 DAYS FOR SLOPES GREATER THAN 50' IN LENGTH.
ALL OTHER AREAS WITH SLOPES FLATTER THAN 4:1	14 DAYS	NONE, EXCEPT FOR PERIMETERS AND HQW ZONES.

CONTRACT NO.: DN00141 PROJECT: 17BP.14.R.8

PROJECT NO.	SHEET NO.
17BP.14.R.8	SIGN-1

APPROVED: Betsy L Watson

DATE: 1/28/13

SEAL

NORTH CAROLINA PROFESSIONAL SEAL 29449 ENGINEER BETSY L. WATSON

STATE OF NORTH CAROLINA
DEPARTMENT OF TRANSPORTATION

SIGNING PLANS
GRAHAM COUNTY

LOCATION: BRIDGE NO. 63 ON SR 1253 (OLLIES CREEK ROAD) OVER EAST BUFFALO CREEK

GENERAL NOTES

- SIGNS FURNISHED BY CONTRACTOR
- IF REMOVAL OR RELOCATION OF SIGNS ON PRIVATE STREET (NON-STATE MAINTAINED) IS REQUIRED DUE TO CONSTRUCTION, THE CONTRACTOR SHALL INFORM THE ENGINEER. THE WORK WILL BE COMPLETED BY OTHERS.
- SIGNING PLANS DO NOT INCLUDE TEMPORARY CONSTRUCTION SIGNING. SEE TRANSPORTATION MANAGEMENT PLANS.
- WHEN NOT STATIONED OR DIMENSIONED ON PLANS, ALL 'E' SIGNS SHALL BE FIELD LOCATED BY THE ENGINEER
- ALL EXISTING SIGNS ON "U" CHANNEL POST WITHIN THE PROJECT LIMITS SHALL BE REMOVED AND DISPOSED OF UNLESS OTHERWISE NOTED ON PLANS.
- THE BACKGROUND FOR TYPE E SIGNS SHALL BE TYPE C REFLECTIVE SHEETING.

ROADWAY STANDARD DRAWINGS

THE FOLLOWING ROADWAY STANDARDS AS APPEAR IN "ROADWAY STANDARD DRAWINGS" - PROJECT SERVICES UNIT - N.C. DEPARTMENT OF TRANSPORTATION - RALEIGH, N.C., DATED JANUARY 2012 ARE APPLICABLE TO THIS PROJECT AND BY REFERENCE HEREBY ARE CONSIDERED A PART OF THESE PLANS:

STD. NO.	TITLE
904.10	ORIENTATION OF GROUND MOUNTED SIGNS
904.50	MOUNTING OF TYPE 'D','E' AND 'F' SIGNS ON 'U' CHANNEL POSTS
1264.01	OBJECT MARKERS - TYPES
1264.02	OBJECT MARKERS - INSTALLATION

SUMMARY OF QUANTITIES

ITEM NO. DESC. NO.	ITEM NO. SECT. NO.	ITEM DESCRIPTION	QUANTITY	UNIT
4025000000	901	CONTRACTOR FURNISHED, TYPE E.....	9	S.F.
4072000000	903	SUPPORTS, 3-LB STEEL U-CHANNEL.....	13	L.F.
4102000000	904	SIGN ERECTION, TYPE E.....	1	EA.
4155000000	907	DISPOSAL OF SIGN SYSTEM, U-CHANNEL.....	7	EA.
4915000000	1264	7' U-CHANNEL POSTS.....	4	EA.
4957000000	1264	OBJECT MARKERS (TYPE 3).....	4	EA.

SIGNING DETAIL

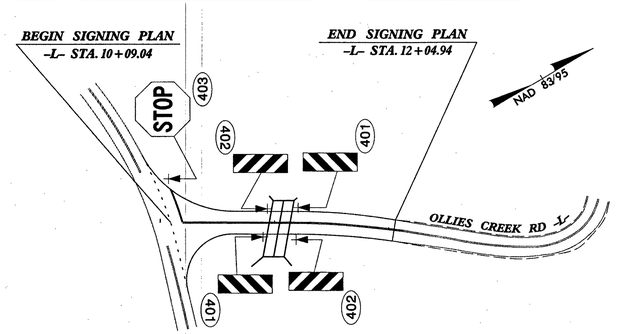

401 QUANTITY REQ'D 2

12 x 36
OM-3R

ONE "U" POST PER SIGN

402 QUANTITY REQ'D 2

12 x 36
OM-3L

ONE "U" POST PER SIGN

403 QUANTITY REQ'D 1

36 x 36
R1-1

ONE "U" POST PER SIGN

INDEX

SHEET NO.	DESCRIPTION
SIGN-1	TITLE SHEET AND SIGN DETAIL

PLAN PREPARED BY:

BETSY L. WATSON, P.E. TRAFFIC ENGINEER

ROSI R. HENNEIN TRANSPORTATION TECHNICIAN

Stantec Consulting Services Inc.
801 Jones Franklin Road
Suite 300
Raleigh, NC 27606
Tel. (919) 851-6866
Fax. (919) 851-7024
www.stantec.com
License No. F-0672

1/28/2013
U:\Graham63\Traffic\Signing\CADD\Signing_Layout_Plans\17BP.14.R.8_sign_01.dgn
rhennein

T.I.P. NO.	SHEET NO.
17BP.14.R.8	UO-1

STATE OF NORTH CAROLINA
DIVISION OF HIGHWAYS

UTILITIES BY OTHERS PLANS
GRAHAM COUNTY

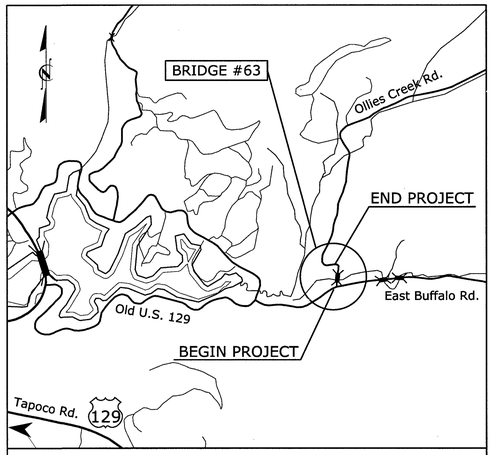

VICINITY MAP

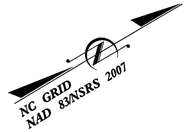

LOCATION: BRIDGE NO. 63 ON SR 1253 (OLLIES CREEK ROAD) OVER EAST BUFFALO CREEK

TYPE OF WORK: GRADING, PAVING, DRAINAGE, CULVERT AND TRAFFIC CONTROL

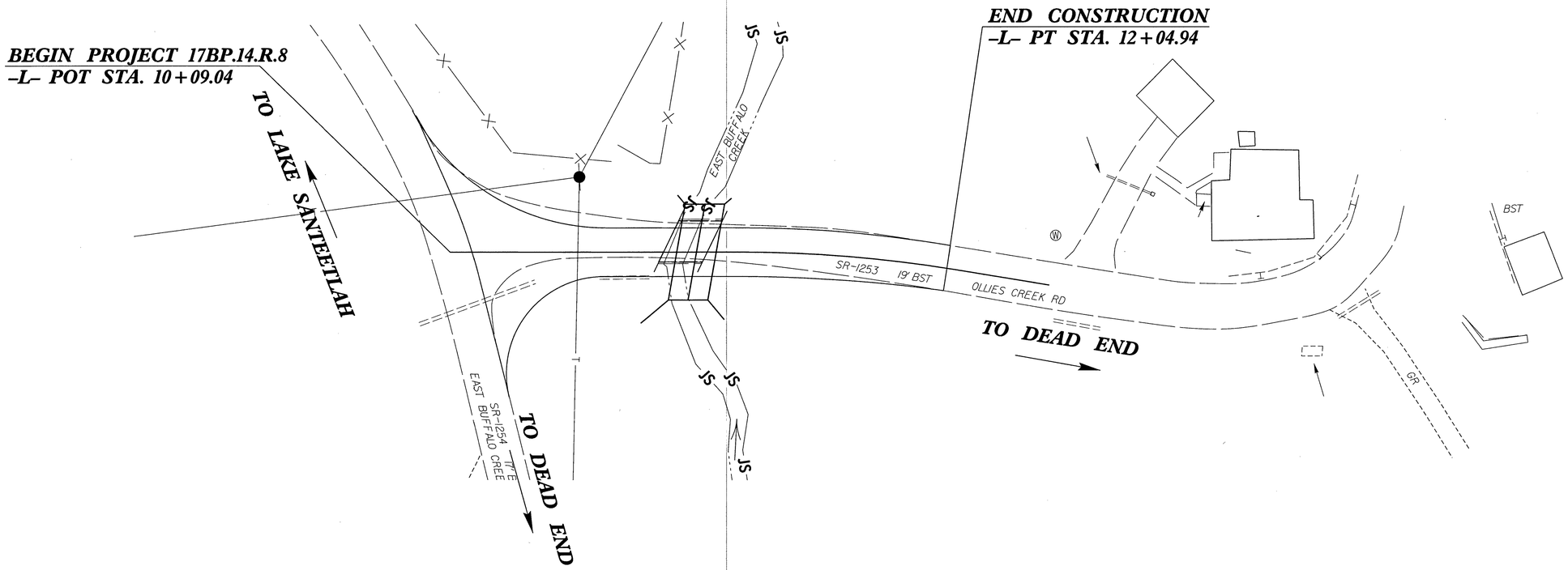

PROJECT: WBS 17BP.14.R.8

CONTRACT:

$$$$$$SYSTIME$$$$$
$$$$$$$$$$$$$$$$DGN$$$$$$$$$$$$$$$$$$$$
$$$$USERNAME$$$$

GRAPHIC SCALES

25 0 25 50
PLANS

25 0 25 50
PROFILE (HORIZONTAL)

10 5 0 10 20
PROFILE (VERTICAL)

INDEX OF SHEETS

SHEET NO.	DESCRIPTION
UO-1	TITLE SHEET
UO-2	UTILITY BY OTHERS PLAN SHEETS

UTILITY OWNERS ON PROJECT

(A) FRONTIER COMMUNICATIONS
(B) DUKE ENERGY

Prepared By:

Stantec

Stantec Consulting Services Inc.
801 Jones Franklin Road
Suite 300
Raleigh, NC 27606
Tel. (919) 851-6866
Fax. (919) 851-7024
www.stantec.com
License No. F-0672

Prepared for the Office of:

DIVISION OF HIGHWAYS
1000 Birch Ridge Dr., Raleigh NC, 27610

2012 STANDARD SPECIFICATIONS

Michael D. Lindgren, PE
PROJECT ENGINEER

Robert Williams, PE
PROJECT DESIGN ENGINEER

STATE OF NORTH CAROLINA DEPARTMENT OF TRANSPORTATION

PROJECT REFERENCE NO.	SHEET NO.
17BPJ4.R.8	UO-2

UTILITIES BY OTHERS

NOTE:
ALL PROPOSED UTILITY WORK SHOWN ON THIS SHEET WILL BE DONE BY OTHERS

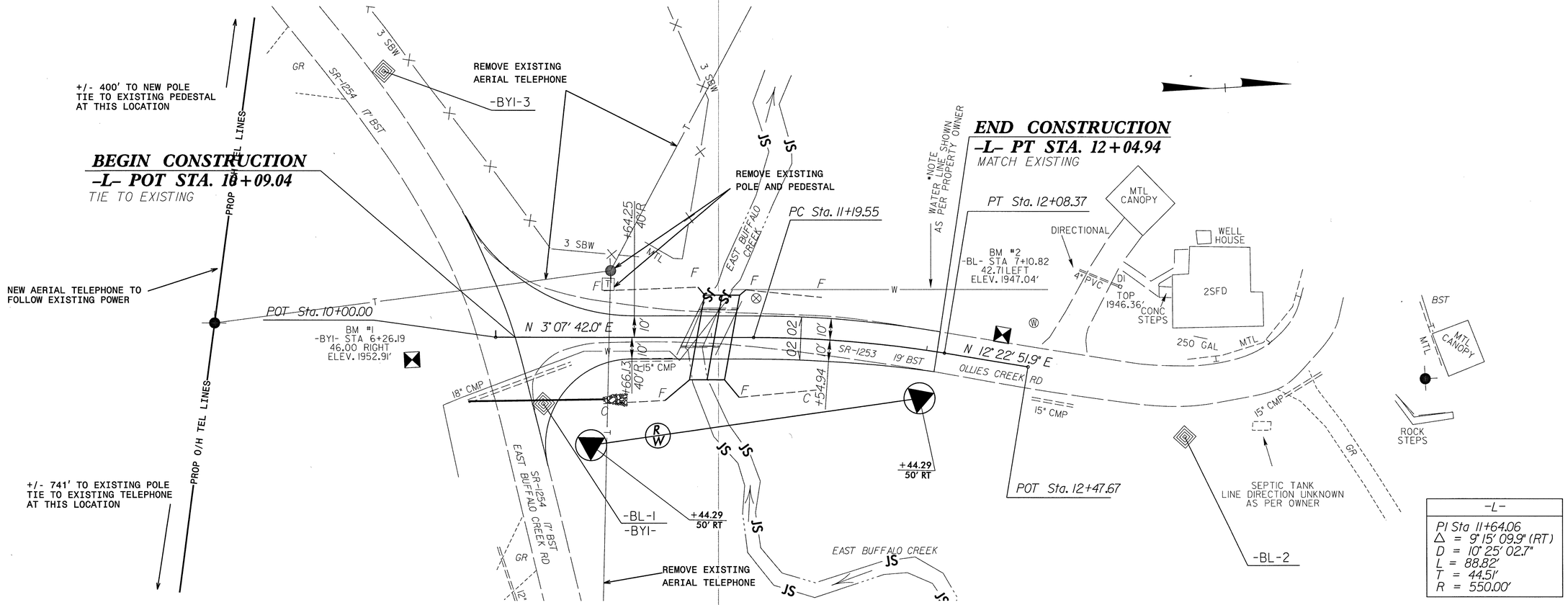

-L-
PI Sta 11+64.06
Δ = 9° 15' 09.9" (RT)
D = 10° 25' 02.7"
L = 88.82'
T = 44.51'
R = 550.00'

5/14/99

2:11:45 PM
12\GRAHAM #63\Utility\GRAHAM63_utl_uo-2.dgn
4/22/2013

PROJECT REFERENCE NO.	SHEET NO.
17BPJ4.R.8	X-1

CROSS SECTION INDEX

ROADWAY	STATION	TO	STATION	SHEET NO.
CROSS SECTION INDEX				X–1
CROSS SECTION EARTHWORK SUMMARY				X–1A
–OLLIES CREEK ROAD–	10 + 00.00		12 + 00.00	X–2

PROJECT REFERENCE NO.	SHEET NO.
17BP.14.R.8	X-1A

STATE OF NORTH CAROLINA
DIVISON OF HIGHWAYS

CROSS-SECTION SUMMARY

STATION -L- FINAL	Uncl. Exc. (cu. yd.)	Embt (cu. yd.)	STATION -L- TEMP. WIDENING	Uncl. Exc. (cu. yd.)	Embt (cu. yd.)
10+50.00	15	0	10+50.00	2	36
11+00.00	53	0	11+00.00	2	319
11+50.00	46	0	11+50.00	3	290
12+00.00	13	0	12+00.00	6	10

Note: Earthwork Quantities are calculated by the Roadway Design Unit. These earthwork quantities are based in part on subsurface data provided by the Geotechnical Engineering Unit

Note: Approximate quantities only. Unclassified Excavation, Borrow Excavation, Shoulder Borrow, Fine Grading, Clearing and Grubbing, Breaking of Existing Asphalt Pavement, and Removal of Existing Pavement will be paid for at the contract lump sum price for "Grading"

Embankment quantity does not include backfill for undercut

8/23/99

0 5 10	PROJ. REFERENCE NO.	SHEET NO.
	17BP.14.R.8	X-2

150 140 130 120 110 100 90 80 70 60 50 40 30 20 10 0 10 20 30 40 50 60 70 80 90 100 110 120 130 140 150

1960
1950
1940

1946.32
1945.32
4:1
1944.10

12+00.00

1960
1950
1940

1945.96
0.020 0.020
4:1
1945.85
2:1
7.3:1
1943.86

11+50.00

1960
1950
1940

1949.91
0.020 0.020
2:1
2:1
CULVERT
1940.38

11+00.00

1960
1950
1940

1947.64
4:1
0.020 0.020
1945.48
2:1
5.9:1
1944.30

10+50.00

1960
1950
1940

1949.50

10+00.00

150 140 130 120 110 100 90 80 70 60 50 40 30 20 10 0 10 20 30 40 50 60 70 80 90 100 110 120 130 140 150

5/1/2013
U:\Roadway\Xsc\GRAHAM63_rdy_L_XPL.dgn
mlindgren

BENCH MARK - BM #1 : -BY1- STATION 6+26.00 46' RT. WITH 8" SPIKE IN ROOT OF 10" WALNUT TREE ELEV. 1952.51

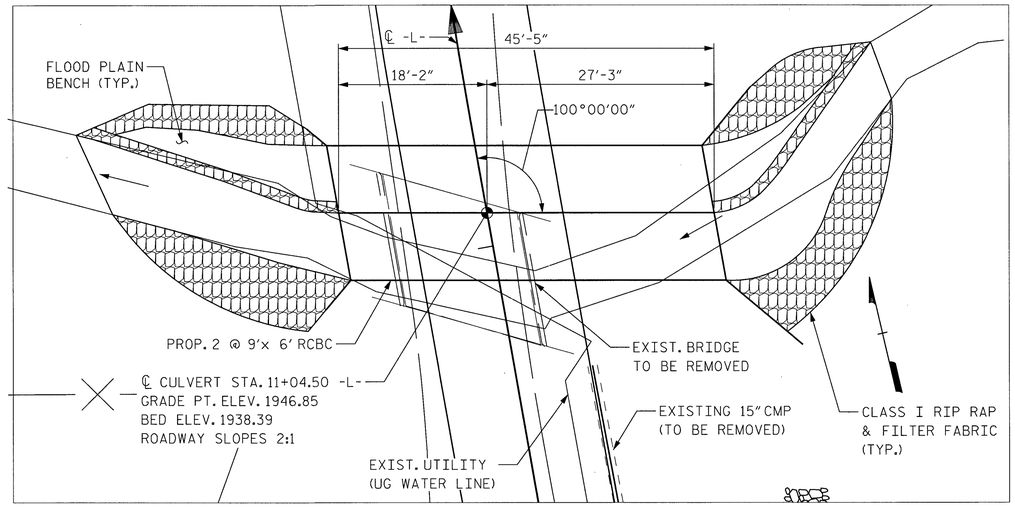

LOCATION SKETCH

FOR UTILITY INFORMATION SEE UTILITY PLANS AND SPECIAL PROVISIONS

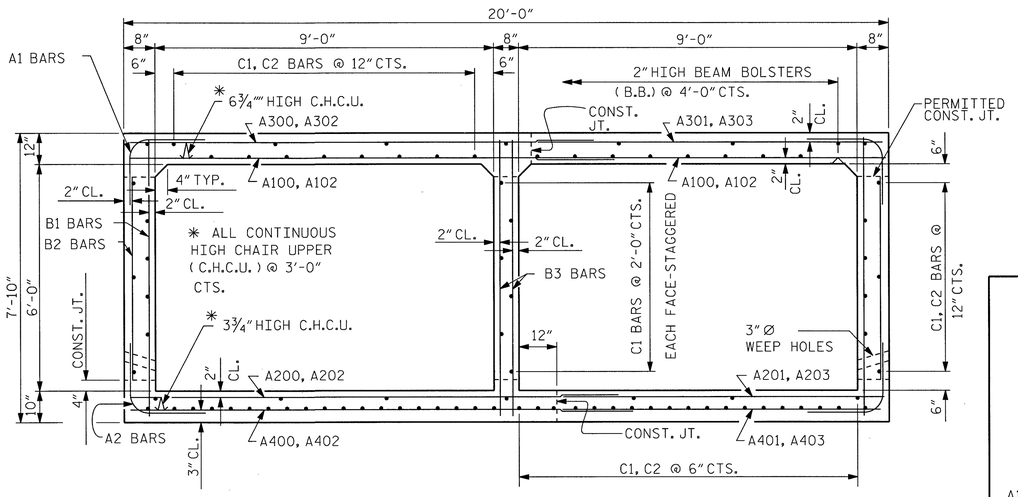

RIGHT ANGLE SECTION OF BARREL

THERE ARE 90 "C" BARS IN SECTION OF BARREL.

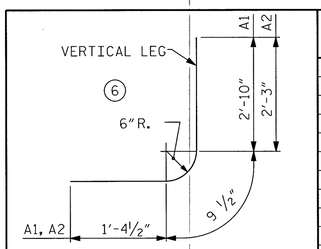

BAR TYPE

BAR DIMENSIONS ARE OUT TO OUT

SPLICE LENGTHS CHART

BAR	SIZE	SPLICE LENGTH
B1	4	1'-9"
B3	4	1'-9"
C1	4	1'-9"
A100	5	2'-6"
A200	4	1'-9"
A300	4	1'-9"
A400	5	2'-6"
G1	5	2'-6"
S2	8	2'-6"

OVERTOPPING FLOOD DATA

OVERTOPPING DISCHARGE ----------= 850 CFS ±
FREQUENCY OF OVERTOPPING ----------= 50 YR. ±
OVERTOPPING FLOOD ELEVATION ---------= 1945.9

HYDRAULIC DATA

DESIGN DISCHARGE ---------- = 700 CFS
FREQUENCY OF DESIGN FLOOD ---------- = 25 YR.
DESIGN HIGH WATER ELEVATION --------- = 1945.7
BASIC DRAINAGE (Q100) ---------- = 1000 CFS
BASIC HIGH WATER ELEVATION --------- = 1946.78
DRAINAGE AREA ---------- = 2.17 SQ. MI.

TOTAL STRUCTURE QUANTITIES

CLASS A CONCRETE

BARREL @ 1.811	CY/FT	82.2	C.Y.
SILL WALLS		1.3	C.Y.
WINGS ETC.		20.7	C.Y.
TOTAL		104.2	C.Y.

REINFORCING STEEL

BARREL	11,963	LBS.
SILL WALLS	117	LBS.
WINGS ETC.	934	LBS.
TOTAL	13,014	LBS.

FOUNDATION CONDITIONING MATERIAL = 64 TONS

CULVERT EXCAVATION = LUMP SUM

REMOVAL OF EXISTING STRUCTURE AT STATION 11+04.50 -L- = LUMP SUM

RIP RAP, CLASS I = 80 TONS

GEOTEXTILE FOR DRAINAGE = 97 S.Y.

NOTES:

ASSUMED LIVE LOAD ----------HS20-44 OR ALTERNATE LOADING.

DESIGN FILL----------2.76'

FOR OTHER DESIGN DATA AND NOTES SEE STANDARD NOTE SHEET.

3" Ø WEEP HOLES INDICATED TO BE IN ACCORDANCE WITH THE SPECIFICATIONS.

CONCRETE IN CULVERTS TO BE POURED IN THE FOLLOWING ORDER:

1. WING FOOTINGS AND FLOOR SLAB INCLUDING 4" OF ALL VERTICAL WALLS.
2. THE REMAINING PORTIONS OF THE WALLS AND WINGS FULL HEIGHT FOLLOWED BY ROOF SLAB AND HEADWALLS.

THE RESIDENT ENGINEER SHALL CHECK THE LENGTH OF CULVERT BEFORE STAKING IT OUT TO MAKE CERTAIN THAT IT WILL PROPERLY TAKE CARE OF THE FILL.

DIMENSIONS FOR WING LAYOUT AS WELL AS ADDITIONAL REINFORCING STEEL EMBEDDED IN BARREL ARE SHOWN ON WING SHEET.

AT THE CONTRACTOR'S OPTION, HE MAY SPLICE THE VERTICAL REINFORCING STEEL IN THE INTERIOR FACE OF EXTERIOR WALL AND BOTH FACES OF INTERIOR WALLS ABOVE LOWER WALL CONSTRUCTION JOINT. THE SPLICE LENGTH SHALL BE AS PROVIDED IN THE SPLICE LENGTH CHART SHOWN ON THE PLANS. EXTRA WEIGHT OF STEEL DUE TO THE SPLICES SHALL BE PAID FOR BY THE CONTRACTOR.

AT THE CONTRACTOR'S OPTION HE MAY SUBMIT, TO THE ENGINEER FOR APPROVAL, DESIGN AND DETAIL DRAWINGS FOR A PRECAST REINFORCED CONCRETE BOX CULVERT IN LIEU OF THE CAST-IN-PLACE CULVERT SHOWN ON THE PLANS. THE DESIGN SHALL PROVIDE THE SAME SIZE AND NUMBER OF BARRELS AS USED ON THE CAST-IN-PLACE DESIGN. FOR OPTIONAL PRECAST REINFORCED CONCRETE BOX CULVERT, SEE SPECIAL PROVISIONS.

AFTER SERVING AS A TEMPORARY CROSSING, THE EXISTING STRUCTURE CONSISTING OF ONE 18'-6" SPAN WITH 17.1' OF CLEAR ROADWAY AND TIMBER FLOOR ON TIMBER JOISTS SUPPORTED BY TIMBER CAPS OVER TIMBER POSTS AND SILLS ON CONCRETE FOOTINGS AT VARIABLE CENTERS AND LOCATED 7' DOWNSTREAM FROM THE PROPOSED CULVERT SHALL BE REMOVED. THE EXISTING BRIDGE IS PRESENTLY POSTED BELOW THE LEGAL LOAD LIMIT. SHOULD THE STRUCTURAL INTEGRITY OF THE BRIDGE FURTHER DETERIORATE, THIS LOAD LIMITATION MAY BE REDUCED AS FOUND NECESSARY DURING THE LIFE OF THE PROJECT.

FOR CULVERT DIVERSION DETAILS AND PAY ITEMS, SEE EROSION CONTROL PLANS.

BILL OF MATERIAL STAGE I CONST.

BAR	NO.	SIZE	TYPE	LENGTH	WEIGHT
A1	60	#4	6	5'-0"	200
A2	60	#4	6	4'-5"	177
A100	32	#5	STR.	13'-4"	445
A101	32	#5	STR.	9'-2"	306
A200	27	#4	STR.	12'-7"	237
A201	27	#4	STR.	9-2"	165
A300	40	#4	STR.	12'-7"	336
A301	40	#4	STR.	9'-2"	245
A400	34	#5	STR.	13'-4"	473
A401	34	#5	STR.	9'-2"	325
B1	40	#4	STR.	6'-6"	174
B2	40	#4	STR.	5'-8"	151
B3	54	#4	STR.	7'-5"	268
C1	90	#4	STR.	21'-11"	1318
G1	10	#5	STR.	13'-4"	139
G2	10	#5	STR.	9'-2"	96
S2	6	#8	STR.	13'-4"	214
S3	6	#8	STR.	9'-2"	147
REINFORCING STEEL = 5,406 LBS.					

BILL OF MATERIAL STAGE II CONST.

BAR	NO.	SIZE	TYPE	LENGTH	WEIGHT
A3	74	#4	6	5'-0"	247
A4	74	#4	6	4'-5"	218
A102	43	#5	STR.	13'-4"	598
A103	43	#5	STR.	9'-2"	411
A202	34	#4	STR.	12'-7"	303
A203	34	#4	STR.	9-2"	208
A302	50	#4	STR.	12'-7"	420
A303	50	#4	STR.	9'-2"	306
A402	43	#5	STR.	13'-4"	598
A403	43	#5	STR.	9'-2"	411
B4	50	#4	STR.	6'-6"	217
B5	50	#4	STR.	5'-8"	189
B6	68	#4	STR.	7'-5"	337
C2	90	#4	STR.	24'-11"	1498
G3	10	#5	STR.	13'-4"	139
G4	10	#5	STR.	9'-2"	96
S4	6	#8	STR.	13'-4"	214
S5	6	#8	STR.	9'-2"	147
REINFORCING STEEL = 6,557 LBS.					

PROJECT NO. 17BP.14R.8

GRAHAM COUNTY

STATION: 11+04.50 -L-

SHEET 1 OF 5 REPLACES BRIDGE 63

STATE OF NORTH CAROLINA
DEPARTMENT OF TRANSPORTATION
RALEIGH

BARREL STANDARD

DOUBLE 9 FT. X 6 FT. CONCRETE BOX CULVERT 100°00'00" SKEW

REVISIONS						SHEET NO.
NO.	BY:	DATE:	NO.	BY:	DATE:	S-1
1			3			TOTAL SHEETS
2			4			5

Stantec Consulting Services Inc.
801 Jones Franklin Road
Suite 300
Raleigh, NC 27606
Tel. (919) 851-6866
Fax. (919) 851-7024
www.stantec.com
License No. F-0672

ASSEMBLED BY : C. B. BAKER	DATE : 05/2012	SPECIAL
CHECKED BY : T. R. DUDECK	DATE : 05/2012	
DRAWN BY : R.W. WRIGHT	DATE : OCT. 1989	STANDARD
CHECKED BY : C.R.K.	DATE : OCT. 1989	

ADDED NOV.1990

U:\Graham63\Structures\Drawing\C-1& C-2.dgn 5/8/2013 4:52:55 PM bellict DW I4 PEN TABLE.tbl

Raleigh PDF Creator (Full).plt

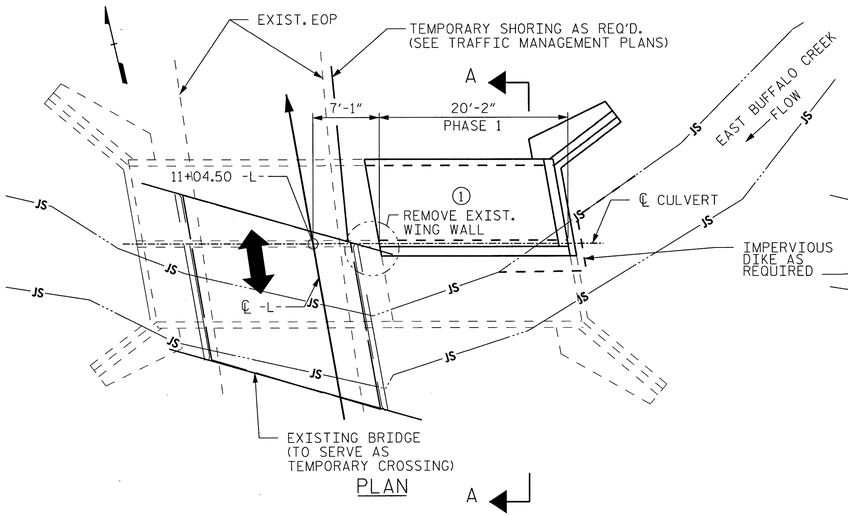

PLAN

STAGE I TRAFFIC/ PHASE 1 CONSTRUCTION

PLACE TEMP. IMPERVIOUS DIKE TO DEWATER THE AREA FOR PHASE 1 CONSSTRUCTION. CONSTRUCT RIGHT FLOOD PLAIN CULVERT BARREL, SILL WALL AND UPSTREAM WING WALL UNDER NORTH BOUND LANE. DO NOT REMOVE TEMP. IMPERVIOUS DIKE.

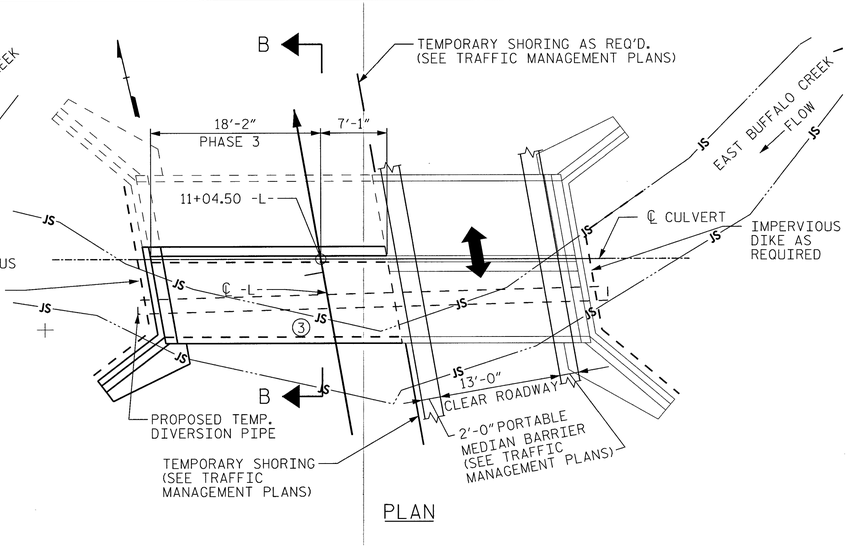

PLAN

STAGE II TRAFFIC/ PHASE 3 CONSTRUCTION

DECONSTRUCT EXISTING BRIDGE. DEWATER THE AREA FOR PHASE 3 CONST. AROUND THE TEMPORARY DIVERSION PIPE. CONSTRUCT LEFT LOW FLOW CULVERT BARREL, SILL WALL AND UPSTREAM WING WALL UNDER SOUTH BOUND LANE AROUND THE TEMPORARY DIVERSION PIPE. REMOVE TEMPORARY PIPE AND TEMPORARY IMPERVIOUS DIKES UP AND DOWNSTREAM OF PHASE 2 AND 3 CONSTRUCTION.

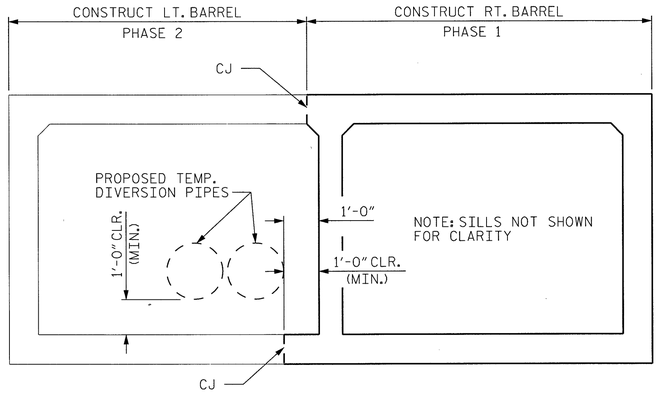

SECTION A-A

STAGE I TRAFFIC/ PHASE 1 & 2 CONSTRUCTION

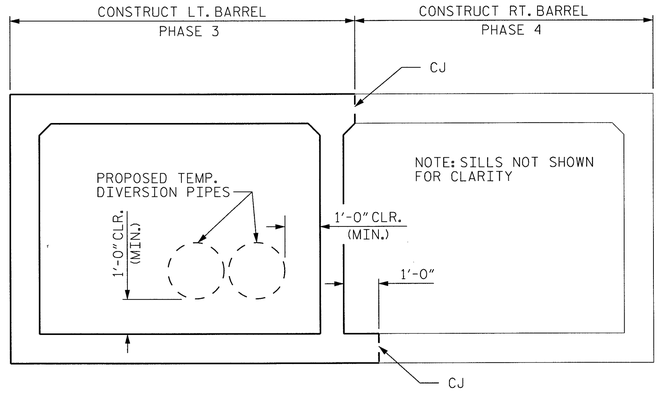

SECTION B-B

STAGE II TRAFFIC/ PHASE 3 & 4 CONSTRUCTION

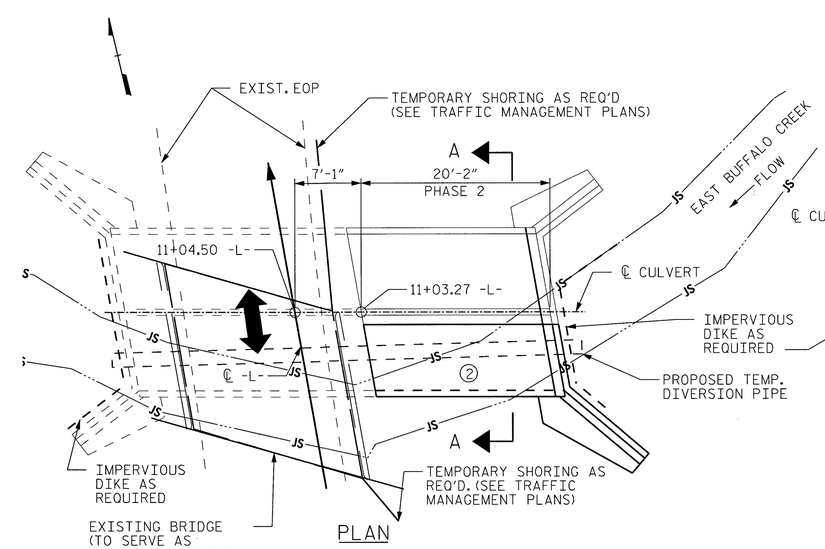

PLAN

STAGE I TRAFFIC/ PHASE 2 CONSTRUCTION

PLACE TEMPORARY PIPE THRUOUGH THE ENTIRE LENGTH OF LOW FLOW BARREL (PHASE 2 & 3 CONST.). ANCHOR BOTH ENDS BY TEMPORARY DIKES ACROSS EXISTING EAST BUFFALO CREEK. DEWATER AREA FOR PHASE 2 CONSTRUCTION. CONSTRUCT LEFT LOW FLOW CULVERT BARREL, SILL WALL AND UPSTREAM WING WALL UNDER NORTH BOUND LANE AROUND THE TEMPORARY DIVERSION PIPE. SHIFT TRAFFIC OVER PHASE 1 & 2 BARREL SECTIONS.

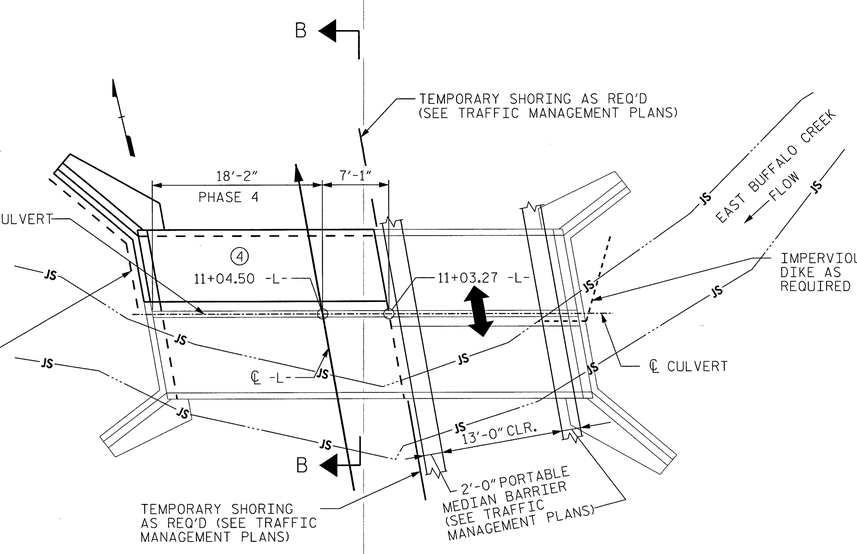

PLAN

STAGE II TRAFFIC/ PHASE 4 CONSTRUCTION

PLACE TEMPORARY IMPERVIOUS DIKES TO DEWATER AREA FOR PHASE 4 CONSTRUCTION. ROUTE FLOW THROUGH LOW FLOW BARREL IN AREA OF PHASE 2 & 3 CONSTRUCTION. CONSTRUCT THE RIGHT FLOOD PLAIN CULVERT BARREL, SILL WALL AND UPSTREAM WINGWALL UNDER THE SOUTH BOUND LANE. REMOVE TEMPORARY IMPERVIOUS DIKES.

Stantec Consulting Services Inc.
801 Jones Franklin Road
Suite 300
Raleigh, NC 27606
Tel. (919) 851-6866
Fax. (919) 851-7024
www.stantec.com
License No. F-0672

DRAWN BY : J. B. GEILE DATE : 05-03-12
CHECKED BY : J. T. KELVINGTON DATE : 05-03-12

NORTH CAROLINA PROFESSIONAL SEAL 13406 ENGINEER JOSEPH T KELVINGTON

PROJECT NO. 17BP.14R.8
GRAHAM COUNTY
STATION: 11+04.50 -L-

SHEET 2 of 5

STATE OF NORTH CAROLINA
DEPARTMENT OF TRANSPORTATION
RALEIGH

STAGING DETAILS

REVISIONS						SHEET NO.
NO.	BY:	DATE:	NO.	BY:	DATE:	S-2
1			3			TOTAL SHEETS
2			4			5

U:\Graham63\Structures\Drawing\C-1a.dgn 5/8/2013 4:43:20 PM bellot

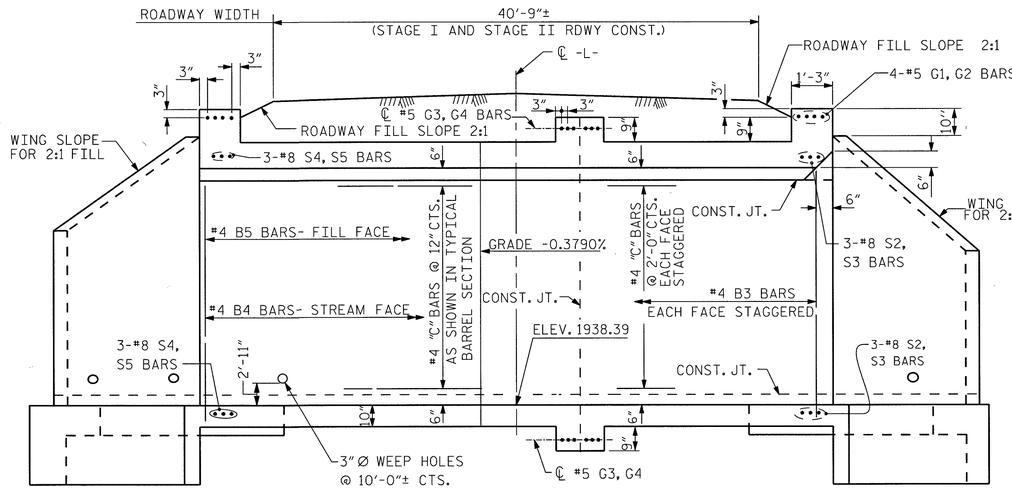

EXTERIOR WALL INTERIOR WALL

CULVERT SECTION NORMAL TO ROADWAY

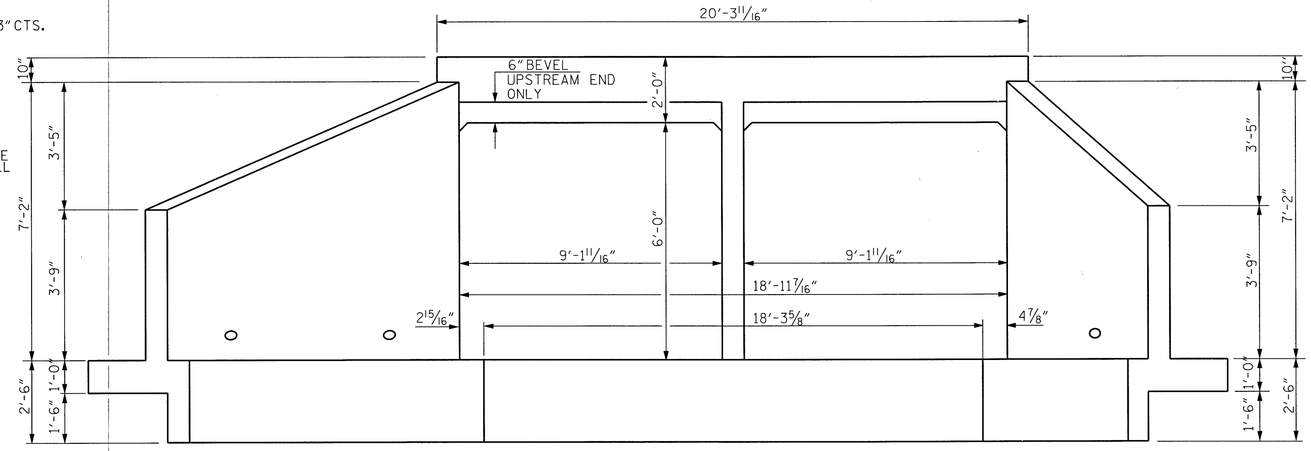

END ELEVATION NORMAL TO SKEW

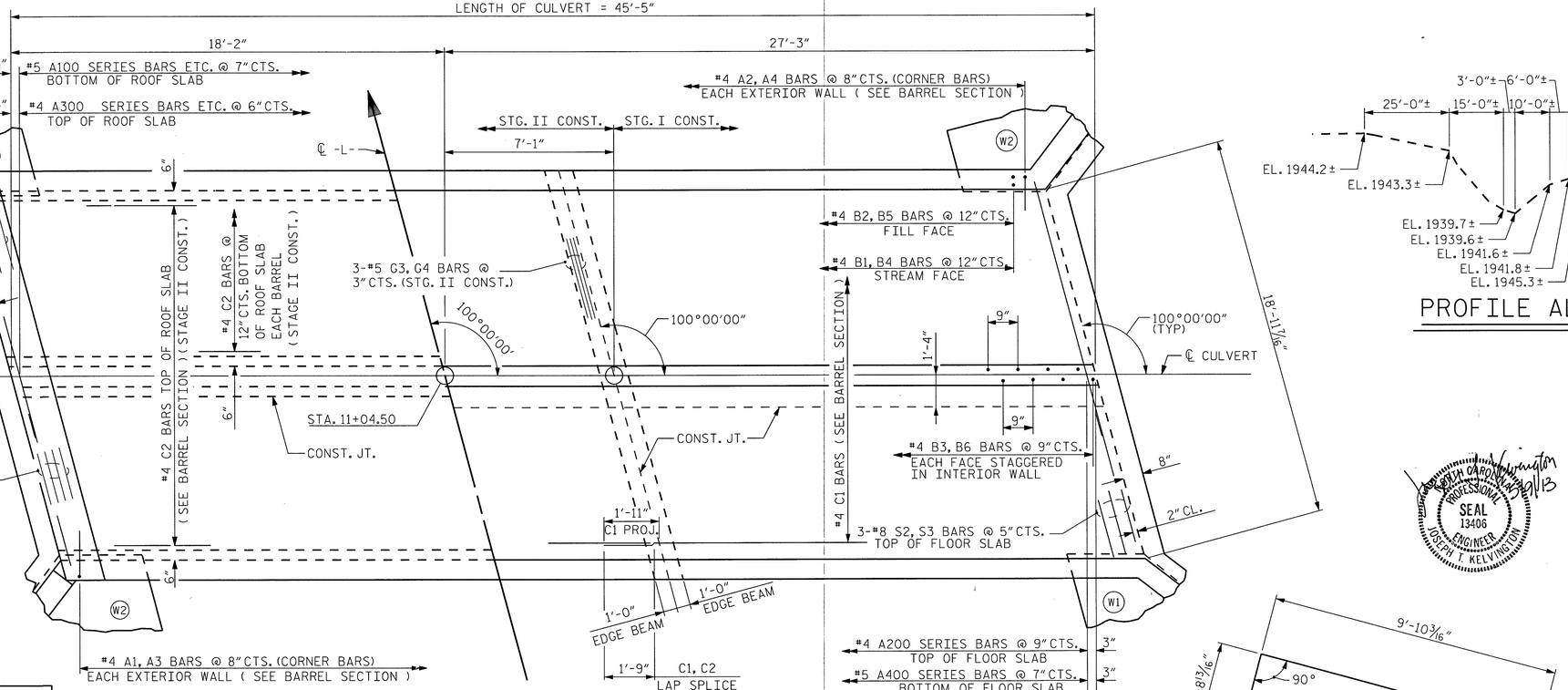

PART PLAN - ROOF SLAB PART PLAN - FLOOR SLAB

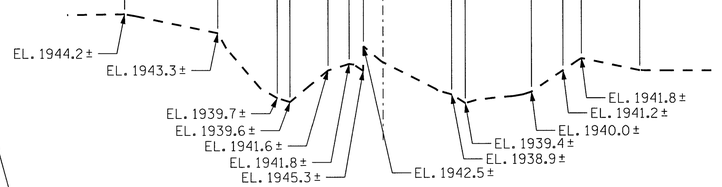

PROFILE ALONG ℄ CULVERT

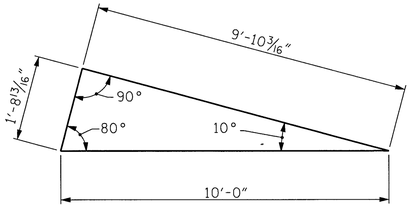

SKEW TRIANGLE

PROJECT NO. 17BP.14R.8

GRAHAM COUNTY

STATION: 11+04.50 -L-

SHEET 3 OF 5

STATE OF NORTH CAROLINA
DEPARTMENT OF TRANSPORTATION
RALEIGH

BARREL STANDARD

DOUBLE 9 FT. X 6 FT. CONCRETE BOX CULVERT 100°00'00" SKEW

REVISIONS						SHEET NO.
NO.	BY:	DATE:	NO.	BY:	DATE:	S-3
1			3			TOTAL SHEETS
2			4			5

Stantec Consulting Services Inc.
801 Jones Franklin Road
Suite 300
Raleigh, NC 27606
Tel. (919) 851-6866
Fax. (919) 851-7024
www.stantec.com
License No. F-0672

ASSEMBLED BY : C. B. BAKER	DATE : 05/2012	SPECIAL
CHECKED BY : T. R. DUDECK	DATE : 05/2012	
DRAWN BY : W. BRYAN STANLEY II	DATE : NOV.1971	STANDARD
CHECKED BY : JOEL A. JOHNSON	DATE : DEC.1971	

Raleigh PDF Creator (Full).plt
DIV 14 PEN TABLE.tbl
5/8/2013 4:43:22 PM bellot
U:\Graham63\Structures\Drawing\C-1& C-2.dgn

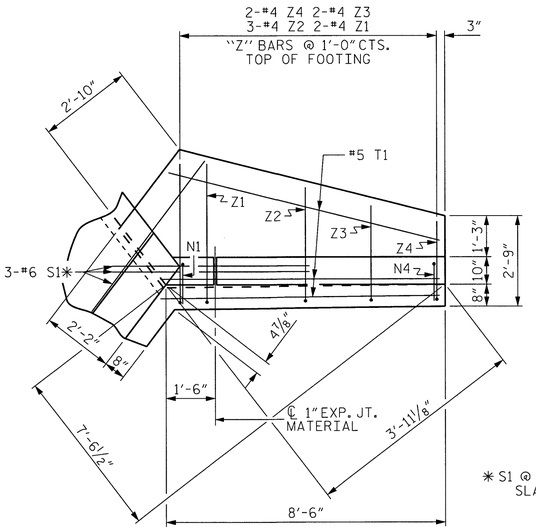

PLAN W2

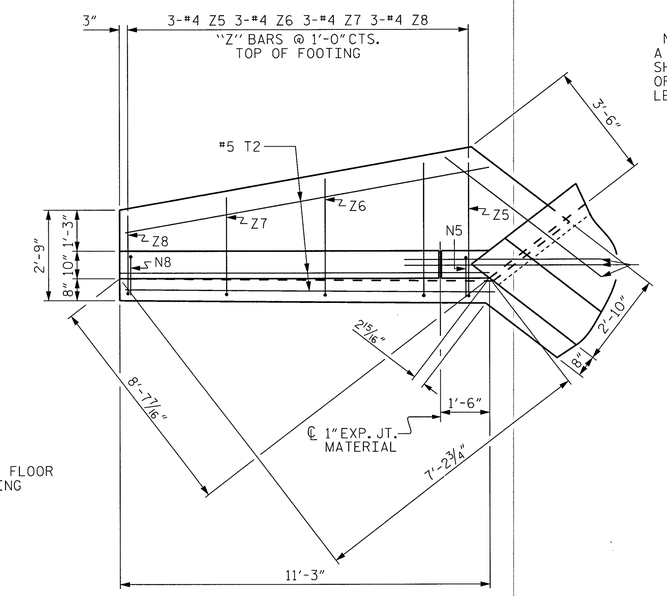

PLAN W1

* S1 @ BOTTOM OF FLOOR SLAB & FOOTING

NOTE:
A 3'-0" WIDE STRIP OF FILTER FABRIC SHALL BE ATTACHED TO THE FILL FACE OF THE WING COVERING THE ENTIRE LENGTH OF THE EXPANSION JOINT.

BAR TYPES

ALL BAR DIMENSIONS ARE OUT TO OUT.

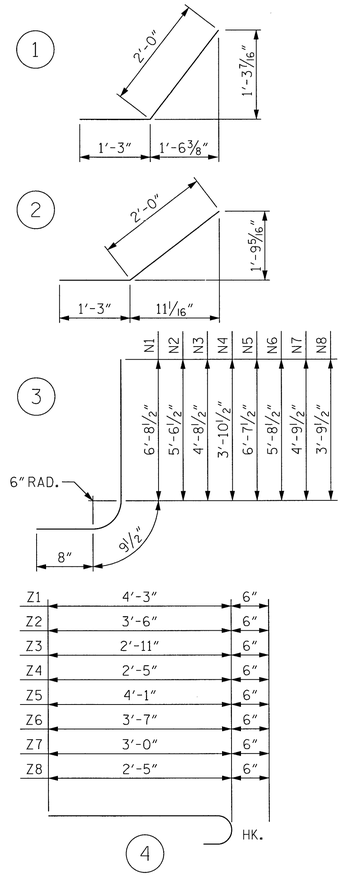

BILL OF MATERIAL

BAR	NO.	SIZE	TYPE	LENGTH	WEIGHT
H1	12	#4	STR	6'-7"	53
H2	4	#4	STR	3'-1"	8
H3	20	#4	2	3'-3"	43
H4	4	#4	STR	7'-1"	19
H5	12	#4	STR	9'-4"	75
H6	4	#4	STR	4'-10"	13
H7	20	#4	1	3'-3"	43
H8	4	#4	STR	9'-9"	26
N1	4	#4	3	8'-2"	22
N2	6	#4	3	7'-1"	28
N3	4	#4	3	6'-2"	16
N4	4	#4	3	5'-4"	14
N5	6	#4	3	8'-1"	32
N6	6	#4	3	7'-2"	29
N7	6	#4	3	6'-3"	25
N8	6	#4	3	5'-3"	21
S1	12	#6	STR	6'-0"	108
T1	6	#5	STR	8'-6"	53
T2	6	#5	STR	11'-3"	70
V1	4	#4	STR	6'-1"	16
V2	6	#4	STR	4'-11"	20
V3	4	#4	STR	4'-1"	11
V4	4	#4	STR	3'-4"	9
V5	6	#4	STR	6'-0"	24
V6	6	#4	STR	5'-1"	20
V7	6	#4	STR	4'-2"	17
V8	6	#4	STR	3'-3"	13
Z1	4	#4	4	4'-9"	13
Z2	6	#4	4	4'-0"	16
Z3	4	#4	4	3'-5"	9
Z4	4	#4	4	2'-11"	8
Z5	6	#4	4	4'-7"	18
Z6	6	#4	4	4'-1"	16
Z7	6	#4	4	3'-6"	14
Z8	6	#4	4	2'-11"	12

REINFORCING STEEL FOR 4 WINGS 934 LBS

CLASS A CONCRETE
- 4 WINGS 14.2 CY
- 2 HEADWALLS 1.9 CY
- 2 EDGE BEAMS (TOP AND BOTTOM) 2.3 CY
- 2 END CURTAIN WALLS 2.3 CY
- TOTAL 20.7 CY

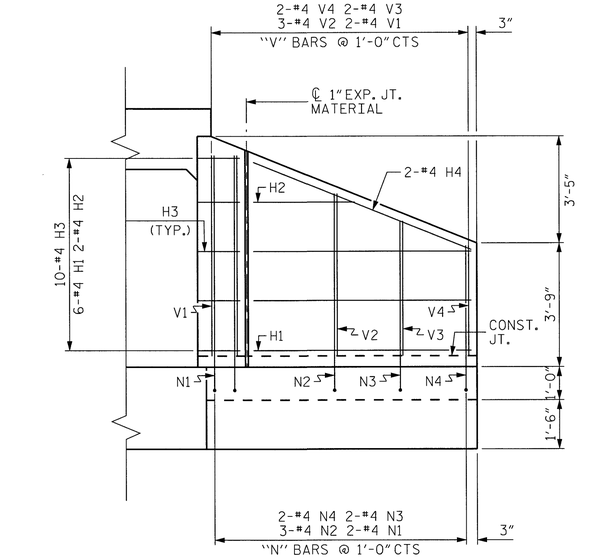

ELEVATION W2

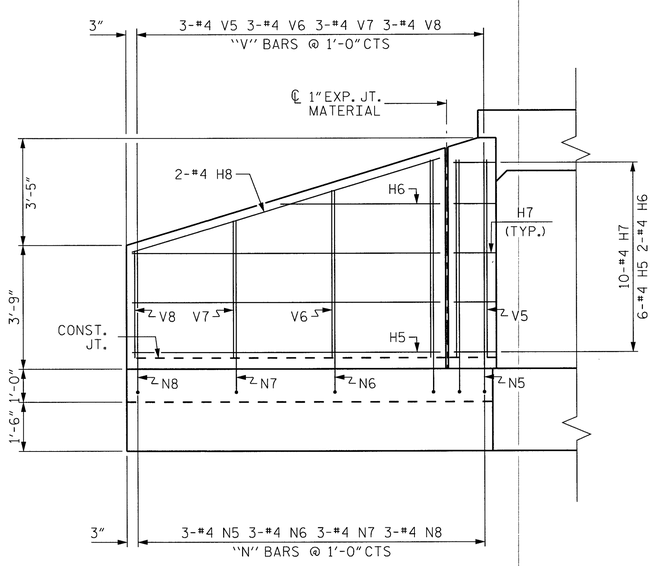

ELEVATION W1

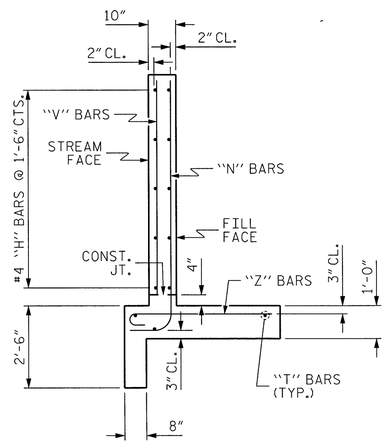

TYPICAL WING SECTION

PROJECT NO. 17BP.14R.8

GRAHAM COUNTY

STATION: 11+04.50 -L-

SHEET 4 OF 5

STATE OF NORTH CAROLINA
DEPARTMENT OF TRANSPORTATION
RALEIGH

WINGS 1 & 2

REVISIONS						SHEET NO.
NO.	BY:	DATE:	NO.	BY:	DATE:	S-4
1			3			TOTAL SHEETS
2			4			5

Stantec
Stantec Consulting Services Inc.
801 Jones Franklin Road
Suite 300
Raleigh, NC 27606
Tel. (919) 851-6866
Fax. (919) 851-7024
www.stantec.com
License No. F-0672

ASSEMBLED BY : C. B. BAKER	DATE : 05/2012
CHECKED BY : T. R. DUDECK	DATE : 05/2012
DRAWN BY : CCJ 12/99	
CHECKED BY : RWW 03/00	

U:\Graham63\Structures\Drawing\C-3.dgn 5/8/2013 4:43:24 PM bellot DIV 14 PEN TABLE.tbl
Raleigh PDF Creator (Full).plt

BILL OF MATERIAL					
BAR	NO.	SIZE	TYPE	LENGTH	WEIGHT
R1	12	#4	STR	8'-8"	70
R2	36	#4	STR	1'-8"	40
R4	10	#4	STR	1'-0"	7
TOTAL REINFORCING STEEL					117 LBS
CLASS A CONCRETE					1.3 CY

NOTE:
BED MATERIAL PLACED BETWEEN SILLS IN THE CULVERT SHALL PROVIDE A CONTINUOUS LOW FLOW CHANNEL BETWEEN THE LOWER SILLS. THE MATERIAL SHALL BE SHOWN IN THE PLAN VIEW. STONES GREATER THAN 10" SHALL NOT BE PLACED WITHIN THE LOW FLOW CHANNEL. BED MATERIAL IS SUBJECT TO APPROVAL BY THE ENGINEER.

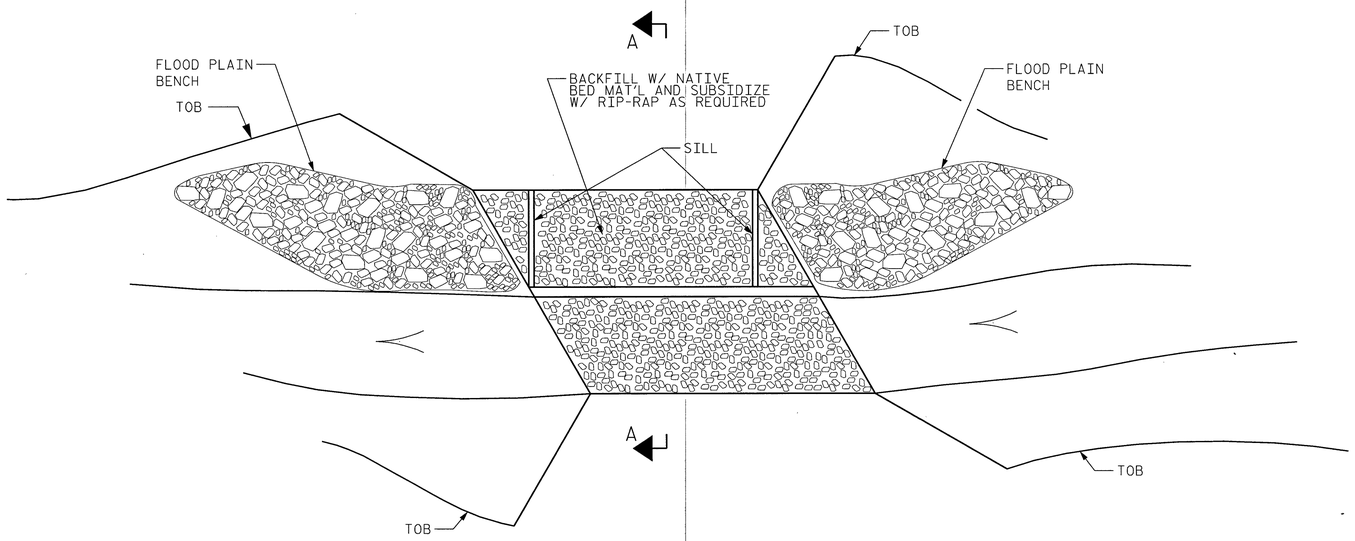

PLAN VIEW

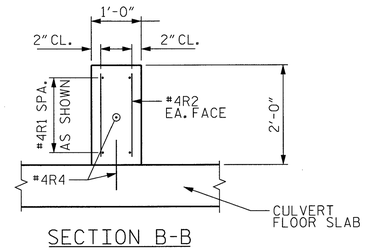

SECTION B-B

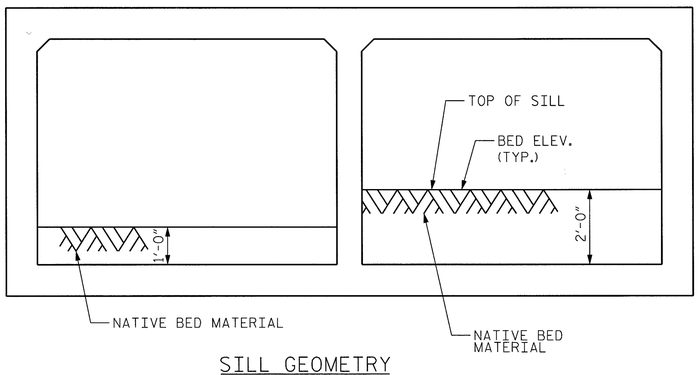

SILL GEOMETRY

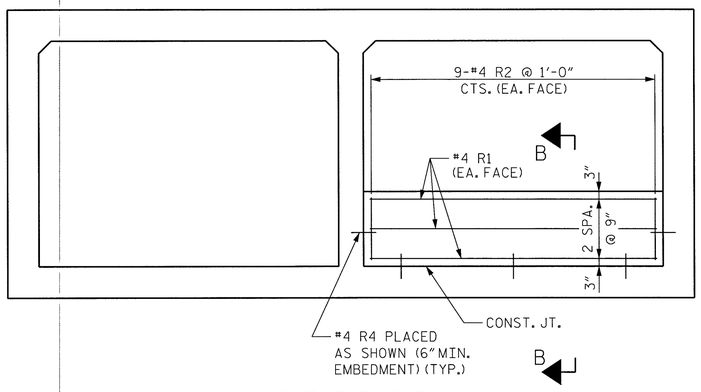

SILL REINFORCEMENT

SECTION A-A

PROJECT NO. 17BP.14R.8

GRAHAM COUNTY

STATION: 11+04.50 -L-

SHEET 5 OF 5

STATE OF NORTH CAROLINA
DEPARTMENT OF TRANSPORTATION
RALEIGH

SILL DETAILS

REVISIONS						SHEET NO.
NO.	BY:	DATE:	NO.	BY:	DATE:	S-5
1			3			TOTAL SHEETS
2			4			5

Stantec
Stantec Consulting Services Inc.
801 Jones Franklin Road
Suite 300
Raleigh, NC 27606
Tel. (919) 851-6866
Fax. (919) 851-7024
www.stantec.com
License No. F-0672

DRAWN BY : T. R. DUDECK DATE : 05-03-12
CHECKED BY : J. T. KELVINGTON DATE : 05-03-12

NORTH CAROLINA PROFESSIONAL SEAL 13406 ENGINEER JOSEPH T. KELVINGTON

U:\Graham63\Structures\Drawing\C-4.dgn 5/8/2013 4:43:26 PM bellot