CONTRACT: DN00071

TIP PROJECT: BD-5114C

See Sheet 1-4 For Index of Sheets

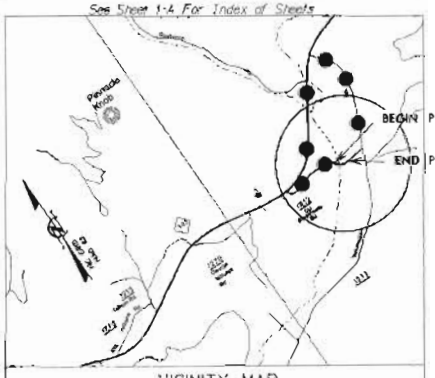

VICINITY MAP

DETOUR ROUTE

STATE OF NORTH CAROLINA
DIVISION OF HIGHWAYS

GRAHAM COUNTY

STATE	STATE PROJECT REFERENCE NO.	SHEET NO.	TOTAL SHEETS
N.C.	BD-5114C	1	

STATE PROJ. NO.	F.A. PROJ. NO.	DESCRIPTION
45360.1.3	BRZ-1212(6)	P.E.
45360.2.3	BRZ-1212(6)	R/W
45360.3.3	BRZ-1212(6)	CONST.

LOCATION: BRIDGE NO. 23 OVER SWEETWATER CREEK ON SR 1212 (T.J. WILSON RD.)

TYPE OF WORK: GRADING, DRAINAGE, PAVING AND STRUCTURE

4

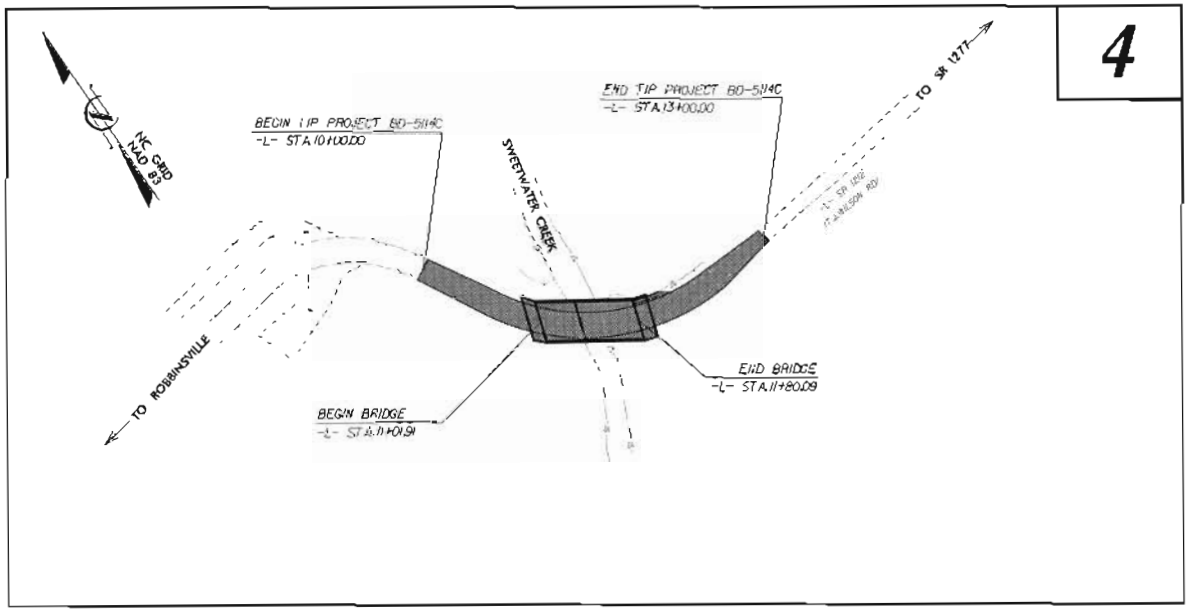

V&M Vaughn & Melton Consulting Engineers

GRAPHIC SCALES

PLANS 20 10 0 20 40

PROFILE (HORIZONTAL) 20 10 0 20 40

PROFILE (VERTICAL) 4 2 0 4 8

DESIGN DATA

PROJECT LENGTH

LENGTH ROADWAY TIP PROJECT BD-5114C = 0.042 MI
LENGTH STRUCTURE TIP PROJECT BD-5114C = 0.015 MI
TOTAL LENGTH OF TIP PROJECT BD-5114C = 0.057 MI

Prepared in the Office of:
VAUGHN & MELTON
1318-F PATTON AVE.
ASHEVILLE NC, 28806
FOR THE NORTH CAROLINA DIVISION OF HIGHWAYS

2012 STANDARD SPECIFICATIONS

RIGHT OF WAY DATE:
OCTOBER 21, 2011

LETTING DATE:
JULY 24, 2012

REECE SCHULER, PE
PROJECT ENGINEER

AARON CARVER, PE
PROJECT DESIGN ENGINEER

NCDOT CONTACT:
JOSH DEYTON, PE
DIVISION 14 - BRIDGE MANAGER

HYDRAULICS ENGINEER
5/14/12
DIRECTOR

ROADWAY DESIGN ENGINEER
5/16/12
DIRECTOR

DIVISION OF HIGHWAYS
STATE OF NORTH CAROLINA

PROJECT REFERENCE NO	SHEET NO
BD-5142C	1-A

ROADWAY DESIGN ENGINEER

3/16/12

INDEX OF SHEETS

SHEET NUMBER	SHEET
1	TITLE SHEET
1-A	INDEX OF SHEETS, GENERAL NOTES, AND LIST OF STANDARD DRAWINGS
1-B	CONVENTIONAL SYMBOLS
1-C	SURVEY CONTROL SHEET
2	PAVEMENT SCHEDULE AND TYPICAL SECTIONS
3	SUMMARY OF QUANTITIES
3A	SUMMARY OF DRAINAGE QUANTITIES, SUMMARY OF GUARDRAIL, AND ASPHALT PAVEMENT REMOVAL SUMMARY
3B	EARTHWORK SUMMARY
4	PLAN AND PROFILE SHEET
TCP-1 THRU TCP-3	TRAFFIC CONTROL PLANS
EC-1 THRU EC-3A	EROSION CONTROL PLANS
UD-1 THRU UD-2	UTILITIES BY OTHERS PLANS
X-0	CROSS-SECTION SUMMARY
X-1 THRU X-2	CROSS-SECTIONS
S-1 THRU S-21	STRUCTURE PLANS

GENERAL NOTES:

2012 SPECIFICATIONS
EFFECTIVE: 01-17-12
REVISED: 11-01-11

GRADE LINE:
GRADING AND SURFACING OR RESURFACING AND WIDENING:

THE GRADE LINES SHOWN DENOTE THE FINISHED ELEVATION OF THE PROPOSED SURFACING AT GRADE POINTS SHOWN ON THE TYPICAL SECTIONS. WHERE NO GRADE LINES ARE SHOWN, THE PROFILES SHOWN DENOTE THE TOP ELEVATION OF THE EXISTING PAVEMENT ALONG THE CENTER LINE OF SURVEY ON WHICH THE PROPOSED RESURFACING WILL BE PLACED. GRADE LINES MAY BE ADJUSTED BY THE ENGINEER IN ORDER TO SECURE A PROPER TIE-IN.

CLEARING:

CLEARING ON THIS PROJECT SHALL BE PERFORMED TO THE LIMITS ESTABLISHED BY METHOD II.

SUPERELEVATION:

ALL CURVES ON THIS PROJECT SHALL BE SURERELEVATED IN ACCORDANCE WITH STD. NO. 225.04 USING THE RATE OF SUPERELEVATION AND RUNOFF SHOWN ON THE PLANS. SUPERELEVATION IS TO BE REVOLVED ABOUT THE GRADE POINTS SHOWN ON THE TYPICAL SECTIONS.

SHOULDER CONSTRUCTION:

ASPHALT, EARTH, AND CONCRETE SHOULDER CONSTRUCTION ON THE HIGH SIDE OF SUPERELEVATED CURVES SHALL BE IN ACCORDANCE WITH STD. NO. 560.01.

UNDERDRAINS:

UNDERDRAINS SHALL BE CONSTRUCTED IN ACCORDANCE WITH STD. NO. 815.03 AT LOCATIONS DIRECTED BY THE ENGINEER.

GUARDRAIL:

THE GUARDRAIL LOCATIONS SHOWN ON THE PLANS MAY BE ADJUSTED DURING CONSTRUCTION AS DIRECTED BY THE ENGINEER. THE CONTRACTOR SHOULD CONSULT WITH THE ENGINEER PRIOR TO ORDERING GUARDRAIL MATERIAL.

TEMPORARY SHORING:

SHORING REQUIRED FOR THE MAINTENANCE OF TRAFFIC WILL BE PAID FOR AS "EXTRA WORK" IN ACCORDANCE WITH SECTION 104-7.

SUBSURFACE PLANS:

NO SUBSURFACE PLANS ARE AVAILABLE ON THIS PROJECT. THE CONTRACTOR SHOULD MAKE HIS OWN INVESTIGATION AS TO THE SUBSURFACE CONDITIONS.

END BENTS:

THE ENGINEER SHALL CHECK THE STRUCTURE END BENT PLANS, DETAILS, AND CROSS-SECTION PRIOR TO SETTING OF THE SLOPE STAKES FOR THE EMBANKMENT OR EXCAVATION APPROACHING A BRIDGE.

UTILITIES:

UTILITY OWNERS ON THIS PROJECT ARE TELEPHONE - FRONTIER COMMUNICATIONS

RIGHT-OF-WAY MARKERS:

ALL RIGHT-OF-WAY MARKERS ON THIS PROJECT SHALL BE PLACED BY OTHERS.

2012 ROADWAY ENGLISH STANDARD DRAWINGS

The following Roadway Standards as appear in "Roadway Standard Drawings" Highway Design Branch - N. C. Department of Transportation - Raleigh, N. C., Dated January 17, 2012 are applicable to this project and by reference hereby are considered a part of these plans:

STD. NO.	TITLE
DIVISION 2 - EARTHWORK	
200.02	Method of Clearing - Method II
225.02	Guide for Grading Subgrade - Secondary and Local
225.04	Method of Obtaining Superelevation - Two Lane Pavement
DIVISION 3 - PIPE CULVERTS	
300.01	Method of Pipe Installation - Method 'A'
DIVISION 4 - MAJOR STRUCTURES	
422.11	Bridge Approach Fills
DIVISION 5 - SUBGRADE, BASES AND SHOULDERS	
560.01	Method of Shoulder Construction - High Side of Superelevated Curve - Method I
DIVISION 8 - INCIDENTALS	
815.03	Pipe Underdrain and Blind Drain
840.25	Anchorage for Frames
840.29	Frames and Narrow Slot Flat Grates
840.36	Traffic Bearing Grated Drop Inlet - for Steel Double Frame and Grates
840.37	Steel Grate and Frame
840.46	Traffic Bearing Precast Drainage Structure
840.66	Drainage Structure Steps
846.01	Concrete Curb, Gutter and Curb & Gutter
846.04	Drop Inlet Installation In Shoulder Berm Gutter
862.01	Guardrail Placement
862.02	Guardrail Installation
862.03	Structure Anchor Units
876.02	Guide for Rip Rap at Pipe Outlets

Note: Not to Scale

**S.U.E. = Subsurface Utility Engineering*

STATE OF NORTH CAROLINA
DIVISION OF HIGHWAYS

CONVENTIONAL PLAN SHEET SYMBOLS

BOUNDARIES AND PROPERTY:

- State Line
- County Line
- Township Line
- City Line
- Reservation Line
- Property Line
- Existing Iron Pin
- Property Corner
- Property Monument
- Parcel/Sequence Number
- Existing Fence Line
- Proposed Woven Wire Fence
- Proposed Chain Link Fence
- Proposed Barbed Wire Fence
- Existing Wetland Boundary
- Proposed Wetland Boundary
- Existing Endangered Animal Boundary
- Existing Endangered Plant Boundary

BUILDINGS AND OTHER CULTURE:

- Gas Pump Vent or UG Tank Cap
- Sign
- Well
- Small Mine
- Foundation
- Area Outline
- Cemetery
- Building
- School
- Church
- Dam

HYDROLOGY:

- Stream or Body of Water
- Hydro, Pool or Reservoir
- Jurisdictional Stream
- Buffer Zone 1
- Buffer Zone 2
- Flow Arrow
- Disappearing Stream
- Spring
- Swamp Marsh
- Proposed Lateral, Tail, Head Ditch
- False Sump

RAILROADS:

- Standard Gauge
- RR Signal Milepost
- Switch
- RR Abandoned
- RR Dismantled

RIGHT OF WAY:

- Baseline Control Point
- Existing Right of Way Marker
- Existing Right of Way Line
- Proposed Right of Way Line
- Proposed Right of Way Line with Iron Pin and Cap Marker
- Proposed Right of Way Line with Concrete or Granite Marker
- Existing Control of Access
- Proposed Control of Access
- Existing Easement Line
- Proposed Temporary Construction Easement
- Proposed Temporary Drainage Easement
- Proposed Permanent Drainage Easement
- Proposed Permanent Utility Easement

ROADS AND RELATED FEATURES:

- Existing Edge of Pavement
- Existing Curb
- Proposed Slope Stakes Cut
- Proposed Slope Stakes Fill
- Proposed Wheel Chair Ramp
- Proposed Wheel Chair Ramp Curb Cut
- Curb Cut for Future Wheel Chair Ramp
- Existing Metal Guardrail
- Proposed Guardrail
- Existing Cable Guiderail
- Proposed Cable Guiderail
- Equality Symbol
- Pavement Removal

VEGETATION:

- Single Tree
- Single Shrub
- Hedge
- Woods Line
- Orchard
- Vineyard

EXISTING STRUCTURES:

MAJOR:

- Bridge, Tunnel or Box Culvert
- Bridge Wing Wall, Head Wall and End Wall

MINOR:

- Head and End Wall
- Pipe Culvert
- Footbridge
- Drainage Box: Catch Basin, DI or JB
- Paved Ditch Gutter
- Storm Sewer Manhole
- Storm Sewer

UTILITIES:

POWER:

- Existing Power Pole
- Proposed Power Pole
- Existing Joint Use Pole
- Proposed Joint Use Pole
- Power Manhole
- Power Line Tower
- Power Transformer
- UG Power Cable Hand Hole
- H-Frame Pole
- Recorded UG Power Line
- Designated UG Power Line (S.U.E.*)

TELEPHONE:

- Existing Telephone Pole
- Proposed Telephone Pole
- Telephone Manhole
- Telephone Booth
- Telephone Pedestal
- Telephone Cell Tower
- UG Telephone Cable Hand Hole
- Recorded UG Telephone Cable
- Designated UG Telephone Cable (S.U.E.*)
- Recorded UG Telephone Conduit
- Designated UG Telephone Conduit (S.U.E.*)
- Recorded UG Fiber Optics Cable
- Designated UG Fiber Optics Cable (S.U.E.*)

WATER:

- Water Manhole
- Water Meter
- Water Valve
- Water Hydrant
- Recorded UG Water Line
- Designated UG Water Line (S.U.E.*)
- Above Ground Water Line

TV:

- TV Satellite Dish
- TV Pedestal
- TV Tower
- UG TV Cable Hand Hole
- Recorded UG TV Cable
- Designated UG TV Cable (S.U.E.*)
- Recorded UG Fiber Optic Cable
- Designated UG Fiber Optic Cable (S.U.E.*)

GAS:

- Gas Valve
- Gas Meter
- Recorded UG Gas Line
- Designated UG Gas Line (S.U.E.*)
- Above Ground Gas Line

SANITARY SEWER:

- Sanitary Sewer Manhole
- Sanitary Sewer Cleanout
- UG Sanitary Sewer Line
- Above Ground Sanitary Sewer
- Recorded SS Forced Main Line
- Designated SS Forced Main Line (S.U.E.*)

MISCELLANEOUS:

- Utility Pole
- Utility Pole with Base
- Utility Located Object
- Utility Traffic Signal Box
- Utility Unknown UG Line
- UG Tank; Water, Gas, Oil
- AG Tank; Water, Gas, Oil
- UG Test Hole (S.U.E.*)
- Abandoned According to Utility Records — AATUR
- End of Information — E.O.I.

PROJECT REFERENCE NO	SHEET NO
45360.3	1C
Location and Surveys	

SURVEY CONTROL SHEET BD-5114C

POINT	DESC.	NORTH	EAST	ELEVATION	L STATION	OFFSET
1	-BL-1	607517.7480	576866.8530	2071.57	OUTSIDE PROJECT LIMITS	
2	-BL-2	607334.7360	576996.6450	2067.47	11+12.29	17.45 RT
3	-BL-3	607336.4650	577329.9780	2069.49	OUTSIDE PROJECT LIMITS	

BM1 ELEVATION = 2067.47
N 607335 E 576997
BL STATION 7+24.00 0 RIGHT
30" REBAR WITH ALUMINUM CAP

FINAL PROPOSED RIGHT OF WAY MONUMENT PSD

ALIGN	STATION	OFFSET	NORTH	EAST
L	10+50.00	-24.96	607409.7823	576994.1569
L	10+50.00	-35.00	607414.1588	577002.9993
L	12+85.00	-30.00	607339.7097	577096.7432
L	12+85.00	-25.32	607330.2155	577094.8556
L	13+00.00	-15.50	607243.0243	577186.1844
L	13+00.00	25.00	607283.5898	577187.2977
L	12+25.00	25.00	607280.8616	577085.8428
L	12+25.00	35.00	607271.2538	577083.8927
L	10+85.00	30.00	607346.6137	576982.5462
L	10+85.00	26.04	607352.2186	576969.6948

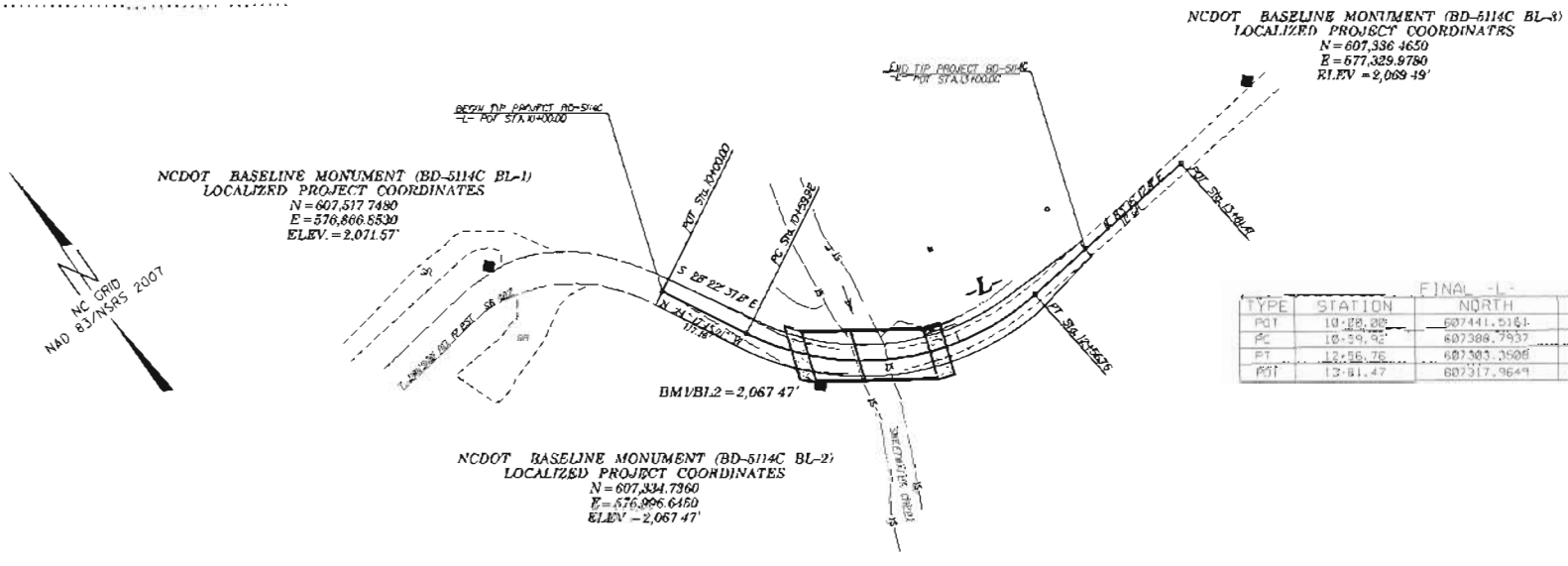

FINAL -L-

TYPE	STATION	NORTH	EAST
POT	10+00.00	607441.5161	576948.4413
PC	10+59.96	607388.7837	576976.9218
PT	12+56.76	607303.3508	577141.4389
POT	12+81.47	607317.9649	577208.2763

DATUM DESCRIPTION

THE LOCALIZED COORDINATE SYSTEM DEVELOPED FOR THIS PROJECT IS BASED ON THE STATE PLANE COORDINATES ESTABLISHED BY NGS FOR MONUMENT "370023 BL-2"
WITH NAD 83/NSRS 2007 STATE PLANE GRID COORDINATES OF
NORTHING: 607334.736(ft) EASTING: 576996.645(ft)
ELEVATION: 2067.47(ft)
THE AVERAGE COMBINED GRID FACTOR USED ON THIS PROJECT (GROUND TO GRID) IS: 0.9999996
THE N.C. LAMBERT GRID BEARING AND LOCALIZED HORIZONTAL GROUND DISTANCE FROM "370023 BL-2" TO -L- STATION 10+00.00 IS
N 24°57'45.01" W 117.16'
ALL LINEAR DIMENSIONS ARE LOCALIZED HORIZONTAL DISTANCES.
VERTICAL DATUM USED IS NAVD 88

NOTES:

1. THE CONTROL DATA FOR THIS PROJECT CAN BE FOUND ELECTRONICALLY BY SELECTING PROJECT CONTROL DATA AT:
HTTP://WWW.NCDOT.ORG/DOH/PRECONSTRUCT/HIGHWAY/LOCATION/PROJECT/

THE FILES TO BE FOUND ARE AS FOLLOWS:
AD-5114C_LS_CONTROL.TXT

SITE CALIBRATION INFORMATION HAS NOT BEEN PROVIDED FOR THIS PROJECT. IF FURTHER INFORMATION IS NEEDED, PLEASE CONTACT THE LOCATION AND SURVEYS UNIT.

△ INDICATES GEODETIC CONTROL MONUMENTS USED OR SET FOR HORIZONTAL PROJECT CONTROL BY THE NCDOT LOCATION AND SURVEYS UNIT.
PROJECT CONTROL ESTABLISHED USING GLOBAL POSITIONING SYSTEM.

GEOIDAL MODEL — G09NC
NOTE: DRAWING NOT TO SCALE

PROJECT REFERENCE NO.	SHEET NO.
BD-5114C	2
ROADWAY DESIGN ENGINEER	PAVEMENT DESIGN ENGINEER

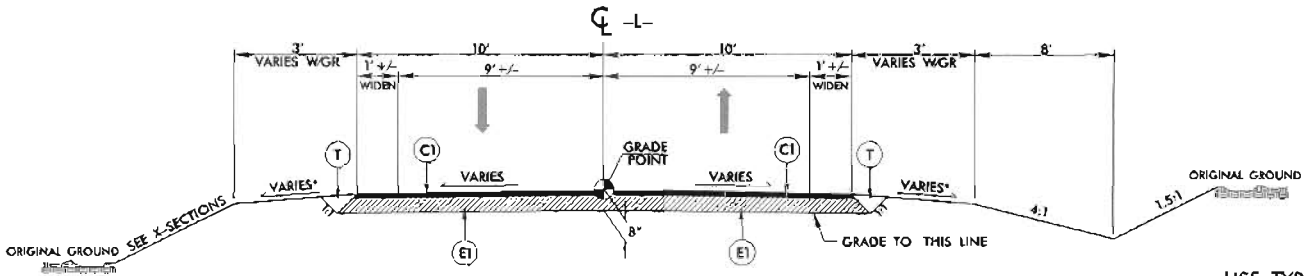

TYPICAL SECTION NO. 1

* SEE NCDOT STD. DWG. # 560.01
* SEE NCDOT STD DWG # 862.01 AND CROSS SECTIONS

USE TYPICAL SECTION NO. 1

-L- STA. 10+00 TO -L- STA. 11+01.91 (BEG BRIDGE)
-L- STA. 11+80.09 (END BRIDGE) TO STA. 13+00

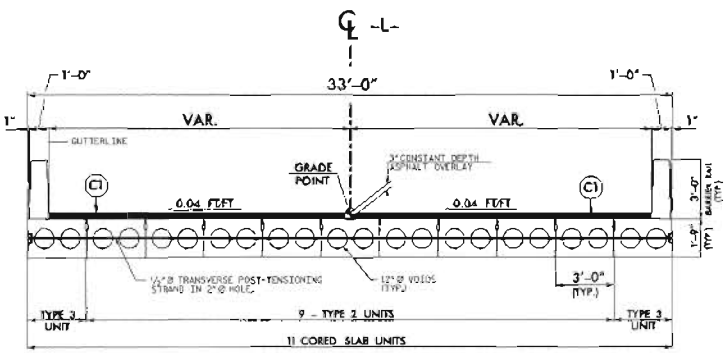

TYPICAL SECTION NO. 2

USE TYPICAL SECTION NO. 2

-L- STA. 11-01.91 (BEGIN BRIDGE) TO
-L- STA. 11+80.09 (END BRIDGE)

C1	PROP. APPROX. 3" ASPHALT CONCRETE SURFACE COURSE, TYPE S9.5B, AT AN AVERAGE RATE OF 137.5 LBS. PER SQ. YD. IN EACH OF TWO LAYERS.
E1	PROP. APPROX. 5" ASPHALT CONCRETE BASE COURSE, TYPE B25.0B, AT AN AVERAGE RATE OF 570 LBS. PER SQ. YD.
T	EARTH MATERIAL

NOTE: PAVEMENT EDGE SLOPES ARE 1:1 UNLESS SHOWN OTHERWISE

PROJECT REFERENCE NO.	SHEET NO.
BD-5114C	3

5/28/99

STATE OF NORTH CAROLINA
DIVISION OF HIGHWAYS

SUMMARY OF QUANTITIES

Line Item	Sec No.	Quantity	Unit	Description
0000100000-N	800	1	LS	Mobilization
0000400000-N	800	1	LS	Construction Surveying
0030000000-N	SP	1	LS	Reinforced Bridge Approach Fill - Sub Regional Tier (Sta. 11+41)
0043000000-N	226	1	LS	Grading
0057000000-E	226	50	CY	Undercut Excavation
1099700000-E	SP	50	Tons	Class IV Subgrade Stabilization
0134000000-E	240	124	CY	Drainage Ditch Excavation
0195000000-E	265	50	CY	Select Granular Material
0196000000-E	270	50	SY	Geotextile for Soil Stabilization
0318000000-E	300	5	Tons	Foundation Conditioning Material, Minor Strs
0335200000-E	310	16	LF	15" CS Drainage Pipe
0636000000-E	300	2	EA	15" CS Pipe Elbows 0.064"
1220000000-E	545	30	Tons	Incidental Stone Base
1489000000-E	610	130	Tons	Asphalt Conc Base Course Type B25.0B
1519000000-E	610	130	Tons	Asphalt Conc Surface Course Type S9.5B
1575000000-E	620	15	Tons	Asphalt Binder for Plant Mix, Grade PG 64-22
2286000000-N	840	1	EA	Masonry Drainage Structures
2407000000-N	840	1	EA	Steel Frame with Two Grates, STD 840.37
2556000000-E	846	10	LF	Shoulder Berm Gutter
3150000000-N	862	5	EA	Additional Guardrail Posts
3270000000-N	SP	1	EA	Guardrail Anchor Units, TYPE 350
3270000000-N	862	3	EA	Guardrail Anchor Units, Type 350 TL-2
3215000000-N	862	4	EA	Guardrail Anchor Units, Type III
3649000000-E	876	1	Tons	Rip Rap, Class B
3656000000-E	876	5	SY	Geotextile for Drainage
4400000000-E	1110	174	SF	Stationary Work Zone Signs
4410000000-E	1110	94	SF	Barricade Mounted Work Zone Signs
4445000000-E	1145	96	LF	Barricades (Type III)
4810000000-E	1205	1,200	LF	PAINT PVT MKG LINES (4")
6000000000-E	1605	605	LF	TEMP SILT FENCE
6009000000-E	1610	10	TON	EROSION CONTROL STONE, CLASS B
6012000000-E	1610	25	TON	SEDIMENT CONTROL STONE
6015000000-E	1615	0.50	ACRES	TEMPORARY MULCHING
6018000000-E	1620	50	LBS	SEED FOR TEMP SEEDING
6021000000-E	1620	0.25	TON	FERTILIZER FOR TEMP SEED
6024000000-E	1622	200	L.F	TEMP SLOPE DRNS
6030000000-E	1630	20	CY	SILT EXCAVATION
6042000000-E	1632	95	LF	1/4" HARDWARE CLOTH
6084000000-E	1660	0.50	Acre	SEEDING & MULCHING
6087000000-E	1660	0.50	Acre	MOWING
6090000000-E	1661	50	lb	SEED FOR REPAIR SEEDING
6093000000-E	1661	0.25	Ton	FERTILIZER FOR REPAIR SEEDING
6096000000-E	1662	50	lb	SEED FOR SUPPLEMENTAL SEEDING
6108000000-E	1665	0.25	Ton	FERTILIZER TOPDRESSING
6114000000-E	1667	10	hrs	SPECIALIZED HAND MOWING
		STRUCTURAL ITEMS		
8035000000-E	402	1	LS	REMOVAL OF EXISTING STRUCTURE
8105520000-E	SP	67.5	LF	3'-0" DRILLED PIERS IN SOIL
8105620000-E	SP	45.0	LF	3'-0" DRILLED PIERS NOT IN SOIL
8111200000-E	SP	36.3	LF	PERMANENT STEEL CASTINGS FRO 3'-0" DRILLED PIER
8113000000-N	SP	1	EA	SID INSPECTIONS
8114000000-N	SP	1	EA	SPT TESTING
8115000000-N	SP	1	EA	CROSSSHOLE SONIC LOGGING (CSL)
8116000000-E	SP	468	LF	CSL TUBES
8121000000-E	412	1	LS	UNCLASSIFIED STRUCTURE EXCAVATION
8182000000-E	420	43.80	CY	CLASS A CONCRETE (BRIDGE)
8210000000-N	422	1	LS	BRIDGE APPROACH SLABS
8217000000-E	425	14,875	LBS	REINFORCING STEEL (BRIDGE)
8238000000-E	425	2,041	LBS	SPIRAL COLUMN REINFORCING STEEL
8365000000-E	450	450	LF	HP12X53 STEEL PILES
8505000000-E	460	150.50	LF	VERTICAL CONC BARR RAIL
8608000000-E	876	155.00	TONS	RIP RAP CLASS II (2'-0" THICK)
8622000000-E	876	175.00	SY	GEOTEXTILE FOR DRAINAGE
8657000000-N	430	1	LS	ELASTOMERIC BEARINGS
8762000000-E	430	825.00	LF	3'-0" X 1"-9"" PRESTRESSED CONCRETE CORED SLABS

$$$$SYSTIME$$$$ $$$$$$$$$$$$$$$DGN$$$$$$$$$$$$$$$$$$$$$ $$$$USERNAME$$$$

COMPUTED BY: JRB DATE: 02-22-12
CHECKED BY: ACC DATE: 02-22-12

STATE OF NORTH CAROLINA
DIVISION OF HIGHWAYS

PROJECT REFERENCE NO.	SHEET NO.
BD-5114C	3-A

RIGHT OF WAY AREA DATA

PARCEL NO.	PROPERTY OWNERS NAMES	TOTAL ACREAGE	AREA TAKEN (sf)	AREA REMAINING RT. (Acre)	AREA REMAINING LT. (Acre)	CONST. EASE. (sf)	PERM. DRAIN. EASE. (sf)	TEMP. DRAIN. EASE. (sf)
1	THOMAS WILSON	–	710			705		
2	PATTON PROPERTIES, LLC	–	1323			926		
3	ANNE HAGER	–	2140			719		

PAVEMENT REMOVAL SUMMARY

IN SQUARE YARDS

LINE	LOCATION	ASPHALT REMOVAL	ASPHALT BREAK-UP	CONCRETE REMOVAL	CONCRETE REMOVAL
-L-	10+00 TO 11+25	260			
	TOTAL	260			

Approximate quantities only. Unclassified excavation, borrow excavation, fine grading, clearing and grubbing, and removal of existing pavement will be paid for at the contract lump sum price for "grading".

NOTE: Invert Elevations are for Bid Purposes only and shall not be used for project construction stakeout. See "Standard Specifications For Roads and Structures, Section 300-5".

SUB-REGIONAL & REGIONAL LIST OF PIPES, ENDWALLS, ETC. (FOR PIPES 48" & UNDER)

STATION / SIZE / THICKNESS OR GAUGE	LOCATION (LT,RT, OR CL)	STRUCTURE NO. FROM	STRUCTURE NO. TO	TOP ELEVATION	INVERT ELEVATION	INVERT ELEVATION	SLOPE CRITICAL	DRAINAGE PIPE (RCP, CSP, CAAP, HDPE, or PVC) 12"	15"	18"	24"	30"	36"	42"	48"	DO NOT USE RCP	DO NOT USE CSP	DO NOT USE CAAP	DO NOT USE HDPE	C.S. PIPE 12" .064	15" .064	18" .064	24" .064	36" .079	42" .109	48" .109	R.C. PIPE (CLASS III) 15"	18"	24"	30"	36"	42"	48"	R.C. PIPE (CLASS IV) 12"	15"	18"	24"	30"	36"	42"	48"
-L- 11+96	LT	1		2067.04	2064.29																																				
-L- 11+96	LT	1	2		2064.29	2062.8			16																																
TOTAL									16																																

STATION	**" R. C. PIPE (CLASS V)	**" R. C. PIPE CULVERTS, CONTRACTOR DESIGN PIPE	**" R. C. PIPE CULVERTS, CONTRACTOR DESIGN PIPE	15" SIDE DRAIN PIPE	18" SIDE DRAIN PIPE	ENDWALLS STD. 838.01, STD. 838.11 OR STD. 838.80 (UNLESS NOTED OTHERWISE) CU. YDS. R.C.P.	C.S.P.	QUANTITIES FOR DRAINAGE STRUCTURES PER EACH (0' THRU 5.0')	* TOTAL L.F. FOR PAY QUANTITY SHALL BE COL. 'A' + (1.3 X COL.'B') LIN. *FT. A 5.0' THRU 10.0'	B 10.0' AND ABOVE	C.B. STD. 840.01 OR STD. 840.02	FRAME, GRATES AND HOOD STANDARD 840.03 TYPE OF GRATE E	F	G		CONCRETE TRANSITIONAL SECTION CATCH BASIN	DROP INLET		T.B.D.I. STD. 840.36	T.B.D.I. FRAME WITH TWO GRATES STD. 840.37				CORR. STEEL ELBOWS NO. & SIZE	CONC. COLLARS CL. "B" C.Y. STD 840.72	CONC. & BRICK PIPE PLUG, C.Y. STD. 840.71	PIPE REMOVAL LIN.FT.	REMARKS
-L- 11+96								1									1		1	1								
-L- 11+96																								2-15"				
TOTAL								1									1		1	1				2-15"				

ABBREVIATIONS

C.B.	CATCH BASIN
N.D.I.	NARROW DROP INLET
D.I.	DROP INLET
G.D.I.	GRATED DROP INLET
G.D.I. (N.S.)	GRATED DROP INLET (NARROW SLOT)
J.B.	JUNCTION BOX
M.H.	MANHOLE
T.B.D.I.	TRAFFIC BEARING DROP INLET
T.B.J.B.	TRAFFIC BEARING JUNCTION BOX

"N" = DISTANCE FROM EDGE OF LANE TO FACE OF GUARDRAIL.
TOTAL SHOULDER WIDTH = DISTANCE FROM EDGE OF TRAVEL LANE TO SHOULDER BREAK POINT.
FLARE LENGTH = DISTANCE FROM LAST SECTION OF PARALLEL GUARDRAIL TO END OF GUARDRAIL.
W = TOTAL WIDTH OF FLARE FROM BEGINNING OF TAPER TO END OF GUARDRAIL.
G = GATING IMPACT ATTENUATOR TYPE 350
NG = NON-GATING IMPACT ATTENUATOR TYPE 350

GUARDRAIL SUMMARY

SURVEY LINE	BEG. STA.	END STA.	LOCATION	LENGTH STRAIGHT	LENGTH SHOP CURVED	LENGTH DOUBLE FACED	WARRANT POINT APPROACH END	WARRANT POINT TRAILING END	"N" DIST. FROM E.O.L.	TOTAL SHOUL. WIDTH	FLARE LENGTH APPROACH END	FLARE LENGTH TRAILING END	W APPROACH END	W TRAILING END	ANCHORS XI MOD	XI	GRAU 350 TL-2	GRAU 350	TYPE III	CAT-1	B-77	BIC	AT-1	IMPACT ATTENUATOR TYPE 350 EA	G	NG	SINGLE FACED GUARDRAIL	REMOVE EXISTING GUARDRAIL	REMOVE AND STOCKPILE EXISTING GUARDRAIL	REMARKS
-L-	10+43.46	10+94.33	LT	68.75			10+94.33		2.7	5.7		50		1.0			1				1									
-L-	10+44.39	11+09.41	RT	43.75				11+09.41	5.3	8.3	25		0.5					1			1									
-L-	11+79.69	12+32.10	LT	43.75				11+79.69	4.7	7.7	25		0.5				1				1									
-L-	11+80.48	12+24.06	RT	43.75			11+80.48		7.2	10.2		25		0.5			1				1									
			SUBTOTAL	200													3	1			4									
			LESS DEDUCTIONS FOR ANCHORS																											
			GRAU-350 1 @ 50'=	-50																										
			GRAU-350 TL-2 3 @ 25'=	-75																										
			TYPE III 4 @ 18.75'=	-75																										
			PROJECT TOTALS:	0																										
			ADDITIONAL GUARDRAIL POSTS=5 EA.																											

$$$$SYSTIME$$$$
$$$$DGN$$$$
$$$$USERNAME$$$$

COMPUTED BY: BBM DATE: 10/2/13
CHECKED BY: ACC DATE: 10/2/13

PROJECT REFERENCE NO.	SHEET NO.
BD-5114C	3-B

DIVISION OF HIGHWAYS
STATE OF NORTH CAROLINA

SUMMARY OF EARTHWORK

IN CUBIC YARDS

LOCATION	UNCLASSIFIED EXCAVATION	UNDERCUT	EMBT + %	BORROW	WASTE
SUMMARY NO.1					
-L- STA. 10+00 TO STA. 11+01.91 (BEG. BRIDGE)	55		53		2
SUBTOTAL SUMMARY NO.1	55		53		2
SUMMARY NO.2					
-L- STA. 11+80.09 (END BRIDGE) TO STA. 13+00	41		139	98	
SUBTOTAL SUMMARY NO.2	41		139	98	
PROJECT SUBTOTAL	96		192	98	2
WASTE IN LIEU OF BORROW				-2	-2
EST. 5% FOR REPLACING TOP SOIL ON BORROW PITS				5	
GRAND TOTAL	96		192	101	
SAY	100			105	
EST. DDE = 124 CY					

CONTINGENCY ITEMS.

INCIDENTAL STONE = 30 TONS

UNDERCUT EXCAVATION = 50 CY

SELECT GRANULAR MATERIAL = 50 CY

CLASS IV SUBGRADE STABILIZATION = 50 TONS

FABRIC FOR SOIL STABILIZATION = 50 SY

Approximate quantities only. Unclassified excavation, borrow excavation, fine grading, clearing and grubbing, and removal of existing pavement will be paid for at the contract lump sum price for "grading"

PROJECT REFERENCE NO.	SHEET NO.
BD-5114C	4
R/W SHEET NO.	
ROADWAY DESIGN ENGINEER	HYDRAULICS ENGINEER

NORTH CAROLINA PROFESSIONAL SEAL 26960 ENGINEER BRECE M. SCHULER 5/16/12

NORTH CAROLINA PROFESSIONAL SEAL 18467 ENGINEER JAMES C. DAVIS 5/16/12

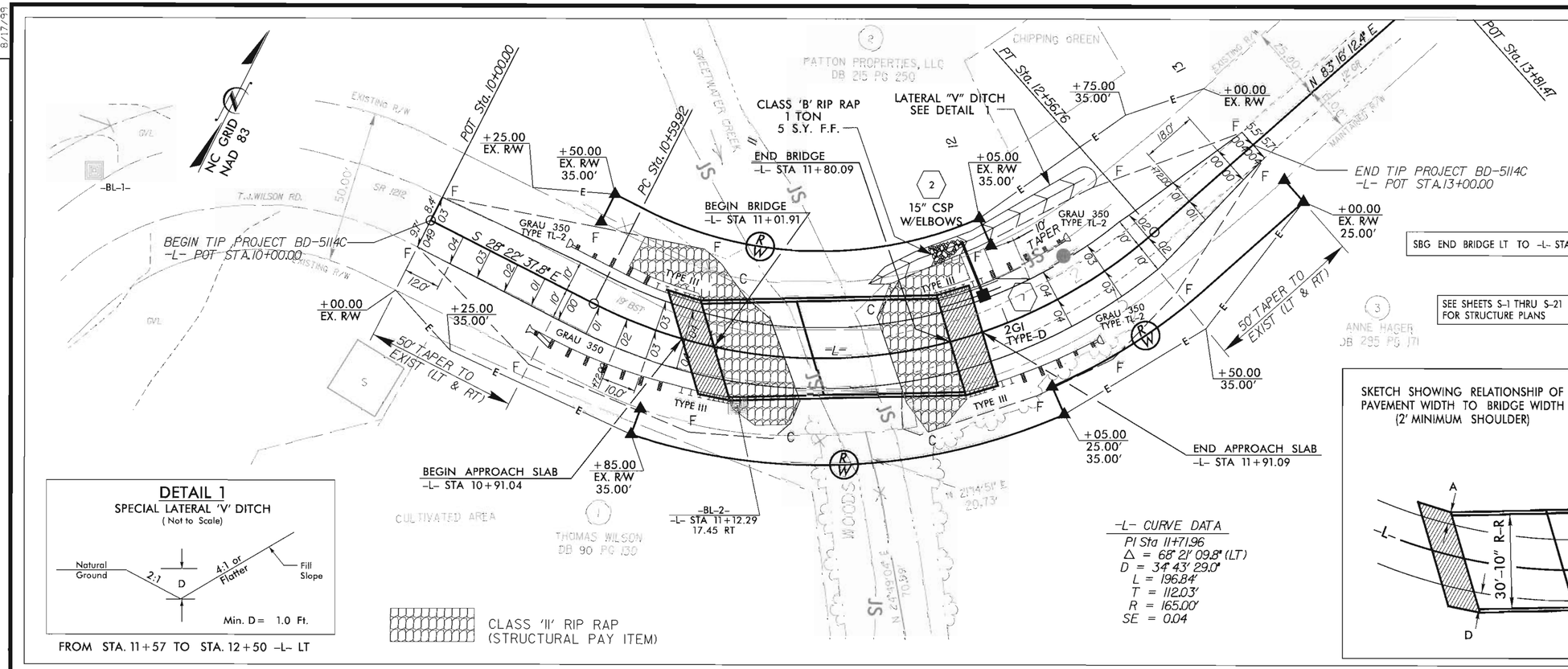

DETAIL 1
SPECIAL LATERAL 'V' DITCH
(Not to Scale)

FROM STA. 11+57 TO STA. 12+50 -L- LT

-L- CURVE DATA
PI Sta 11+71.96
Δ = 68° 21' 09.8" (LT)
D = 34° 43' 29.0"
L = 196.84'
T = 112.03'
R = 165.00'
SE = 0.04

SBG END BRIDGE LT TO -L- STA. 12+02

SEE SHEETS S-1 THRU S-21 FOR STRUCTURE PLANS

V&M
Vaughn & Melton
Consulting Engineers
Asheville, North Carolina 828-253-2796
Charlotte, North Carolina 704-895-9051
Tri-Cities, Tennessee 423-467-8413
Knoxville, Tennessee 865-546-5600
Middlesboro, Kentucky 606-248-5000
Spartanburg, South Carolina 864-574-4775

Copyright © 1994 Vaughn & Melton, Inc. All Rights Reserved

SKETCH SHOWING RELATIONSHIP OF PAVEMENT WIDTH TO BRIDGE WIDTH (2' MINIMUM SHOULDER)

MINIMUM DISTANCE MEASURED BETWEEN PROPOSED EOP & FACE OF BRIDGE BARRIER CORNERS:

A = 3'-10" C = 7'-3"
B = 5'-9" D = 5'-4"

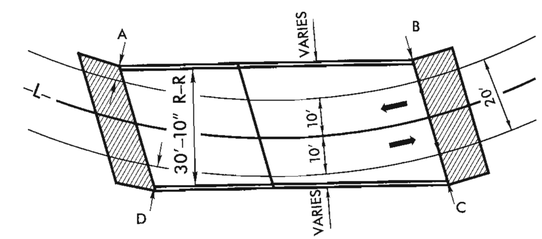

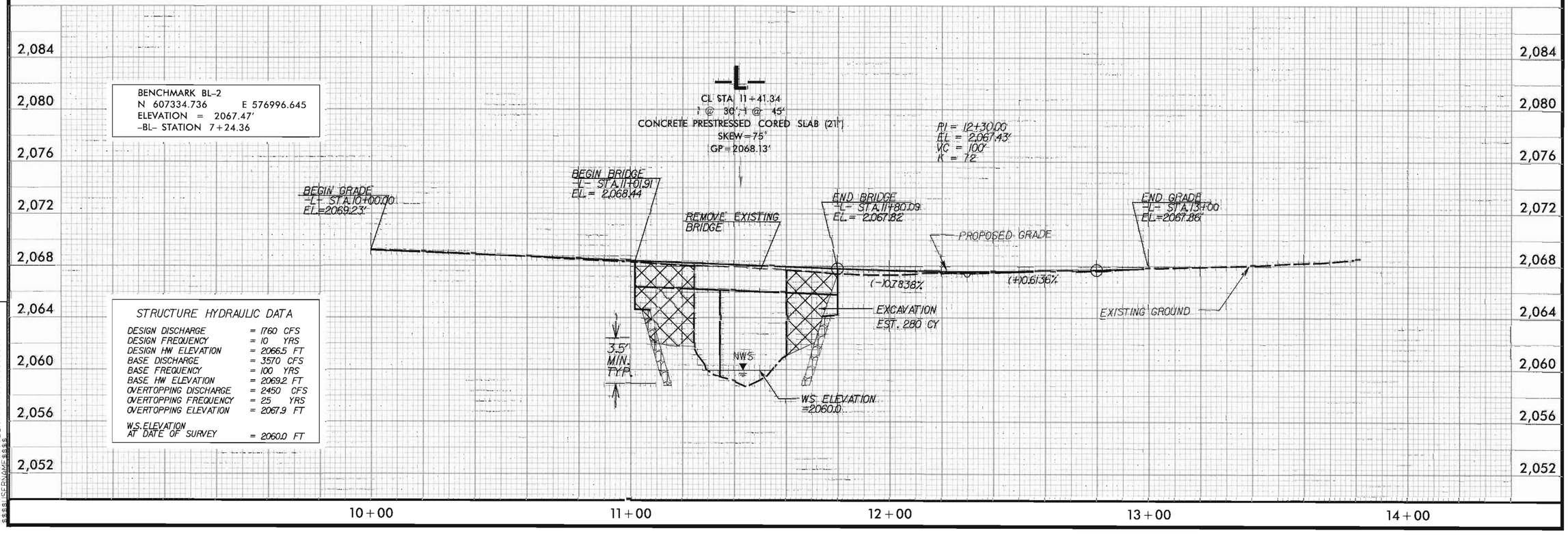

STRUCTURE HYDRAULIC DATA

DESIGN DISCHARGE	= 1760 CFS
DESIGN FREQUENCY	= 10 YRS
DESIGN HW ELEVATION	= 2066.5 FT
BASE DISCHARGE	= 3570 CFS
BASE FREQUENCY	= 100 YRS
BASE HW ELEVATION	= 2069.2 FT
OVERTOPPING DISCHARGE	= 2450 CFS
OVERTOPPING FREQUENCY	= 25 YRS
OVERTOPPING ELEVATION	= 2067.9 FT
W.S. ELEVATION AT DATE OF SURVEY	= 2060.0 FT

8/17/99

REVISIONS

SYSTIME 5/16/12 12:00:00

TIP PROJECT: BD-5114C

CONTRACT:

STATE OF NORTH CAROLINA
DIVISION OF HIGHWAYS

PLAN FOR PROPOSED TRAFFIC CONTROL

BRIDGE 23 – GRAHAM COUNTY

STATE PROJECT REFERENCE NO.	SHEET NO.
BD-5114C	TCP-1

V&M Vaughn & Melton Consulting Engineers
Asheville, North Carolina
Charlotte, North Carolina; Tri-Cities, Tennessee; Knoxville, Tennessee; Middlesboro, Kentucky; Spartanburg, South Carolina

STV / Ralph Whitehead Associates, Inc.
1000 West Morehead St., Ste. 200
Charlotte, NC 28208
NC License Number F-0891

ROADWAY STANDARD DRAWINGS

THE FOLLOWING ROADWAY STANDARDS AS APPEAR IN "ROADWAY STANDARD DRAWINGS" - PROJECT SERVICES UNIT - N.C. DEPARTMENT OF TRANSPORTATION - RALEIGH, N.C., DATED JANURARY 2012 ARE APPLICABLE TO THIS PROJECT AND BY REFERENCE HEREBY ARE CONSIDERED A PART OF THESE PLANS:

STD. NO.	TITLE
1101.03	TEMPORARY ROAD CLOSURES
1101.11	TRAFFIC CONTROL DESIGN TABLES
1110.01	STATIONARY WORK ZONE SIGNS
1145.01	BARRICADES

INDEX OF SHEETS

SHEET NO.	TITLE
TCP-1	LIST OF APPLICABLE ROADWAY STANDARD DRAWINGS, LEGEND, INDEX OF SHEETS
TCP-2	PROJECT NOTES AND PHASING
TCP-3	OFFSITE DETOUR SIGNING AND ROAD CLOSURE SIGNING
TCP-4	SPECIAL SIGN DESIGN

LEGEND

GENERAL

- DIRECTION OF TRAFFIC FLOW
- NORTH ARROW
- PROPOSED PVMT. -------- EXIST. PVMT.
- WORK AREA

TRAFFIC CONTROL DEVICES

- TYPE I BARRICADE
- TYPE II BARRICADE
- TYPE III BARRICADE
- CONE
- DRUM / SKINNY DRUM
- FLASHING ARROW PANEL (TYPE C)
- STATIONARY SIGN
- PORTABLE SIGN
- STATIONARY OR PORTABLE SIGN
- CRASH CUSHION
- CHANGEABLE MESSAGE SIGN
- TRUCK MOUNTED IMPACT ATTENUATOR (TMIA)
- POLICE
- FLAGGER

PAVEMENT MARKINGS

- CRYSTAL/CRYSTAL PAVEMENT MARKER
- YELLOW/YELLOW PAVEMENT MARKER
- CRYSTAL/RED PAVEMENT MARKER
- PAVEMENT MARKING SYMBOLS

APPROVED: [signature]
DATE: 4/17/12

NORTH CAROLINA PROFESSIONAL SEAL 026865 ENGINEER KIT A. PERSIANI

PLAN PREPARED FOR N.C.D.O.T. BY: STV/RALPH WHITEHEAD ASSOCIATES

KIT A. PERSIANI, PE	PROJECT ENGINEER
CHRIS S. PARKER	DESIGN ENGINEER
CHRIS S. PARKER	DESIGN TECHNICIAN

4/17/2012
R:\Traffic\Traffic\Common\TCP\BD5114C_TCP1.dgn

PROJ REFERENCE NO.	SHEET NO.
80-5114C	TCP-2

V&M Vaughn & Melton Consulting Engineers
Charlotte, North Carolina
Tri-Cities, Tennessee
Knoxville, Tennessee
Middlesboro, Kentucky
Spartanburg, South Carolina
Asheville, North Carolina
STV / Ralph Whitehead Associates, Inc.
1000 West Morehead St., Ste. 200
Charlotte, NC 28208
NC License Number F-0991

GENERAL NOTES

CHANGES MAY BE REQUIRED WHEN PHYSICAL DIMENSIONS IN THE DETAIL DRAWINGS, STANDARD DETAILS AND ROADWAY DETAILS ARE NOT ATTAINABLE TO MEET FIELD CONDITIONS OR RESULT IN DUPLICATE OR UNDESIRED OVERLAPPING OF DEVICES. MODIFICATION MAY INCLUDE: MOVING, SUPPLEMENTING, COVERING, OR REMOVAL OF DEVICES AS DIRECTED BY THE ENGINEER.

THE FOLLOWING GENERAL NOTES APPLY AT ALL TIMES FOR THE DURATION OF THE CONSTRUCTION PROJECT EXCEPT WHEN OTHERWISE NOTED IN THE PLAN OR DIRECTED BY THE ENGINEER.

TRAFFIC PATTERN ALTERATIONS

A) NOTIFY THE ENGINEER TWENTY ONE (21) CALENDAR DAYS PRIOR TO ANY TRAFFIC PATTERN ALTERATION.

SIGNING

B) PROVIDE SIGNING AND DEVICES REQUIRED TO CLOSE THE ROAD ACCORDING TO THE ROADWAY STANDARD DRAWINGS AND TRAFFIC CONTROL PLANS. PROVIDE SIGNING REQUIRED FOR THE OFF-SITE DETOUR ROUTE AS SHOWN IN THE TRAFFIC CONTROL PLANS.

C) COVER OR REMOVE ALL SIGNS AND DEVICES REQUIRED TO CLOSE THE ROAD WHEN ROAD CLOSURE IS NOT IN OPERATION. COVER OR REMOVE ALL SIGNS REQUIRED FOR THE OFF-SITE DETOUR WHEN THE DETOUR IS NOT IN OPERATION.

D) ENSURE ALL NECESSARY SIGNING IS IN PLACE PRIOR TO ALTERING ANY TRAFFIC PATTERN.

TRAFFIC CONTROL DEVICES

E) PLACE TYPE III BARRICADES, WITH "ROAD CLOSED" SIGN R11-2 ATTACHED, OF SUFFICIENT LENGTH TO CLOSE ENTIRE ROADWAY.

PHASING NOTES

STEP 1: USING RS01101.03 SHEET 1 OF 9, AND TCP-3, INSTALL DETOUR SIGNS AND PLACE TYPE III BARRICADES TO CLOSE SR 1212 (T.J. WILSON RD.) TO THRU TRAFFIC AND DETOUR ONTO PROPOSED DETOUR.

STEP 2: AWAY FROM TRAFFIC, PERFORM THE FOLLOWING:

REMOVE EXISTING STRUCTURE 23 AND CONSTRUCT PROPOSED STRUCTURE FROM -L- STATION 11+09.50 TO -L- STATION 11+74.29. SEE ROADWAY AND STRUCTURE PLANS.

CONSTRUCT PROPOSED -L- UP TO AND INCLUDING FINAL LAYER OF SURFACE COURSE.

PLACE FINAL PAVEMENT MARKINGS FROM -L- STATION 10+50 +/- TO -L- STATION 13+00 +/-, AND TIE TO EXISTING MARKINGS.

STEP 3: REMOVE ALL TRAFFIC CONTROL DEVICES, SIGNING AND DETOUR ROUTE SIGNING.

OPEN SR 1212 TO FINAL TRAFFIC PATTERN.

APPROVED: [illegible] DATE: 4/17/12

NORTH CAROLINA PROFESSIONAL SEAL 21605 ENGINEER KAREN A. PEGRAM

PROJECT NOTES AND PHASING

SCALE:	NONE
DATE:	4/16/12
PROJ. BY:	CSP
DESIGN BY:	CSP
REVIEWED BY:	KAP

REVISIONS

4/17/2012
R:\Traffic\Traffic\Control\TCP\BD5114C_TC_tcp2.dgn
pwm-gr-23

PROJ REFERENCE NO.	SHEET NO
BD-5114C	TCP-3

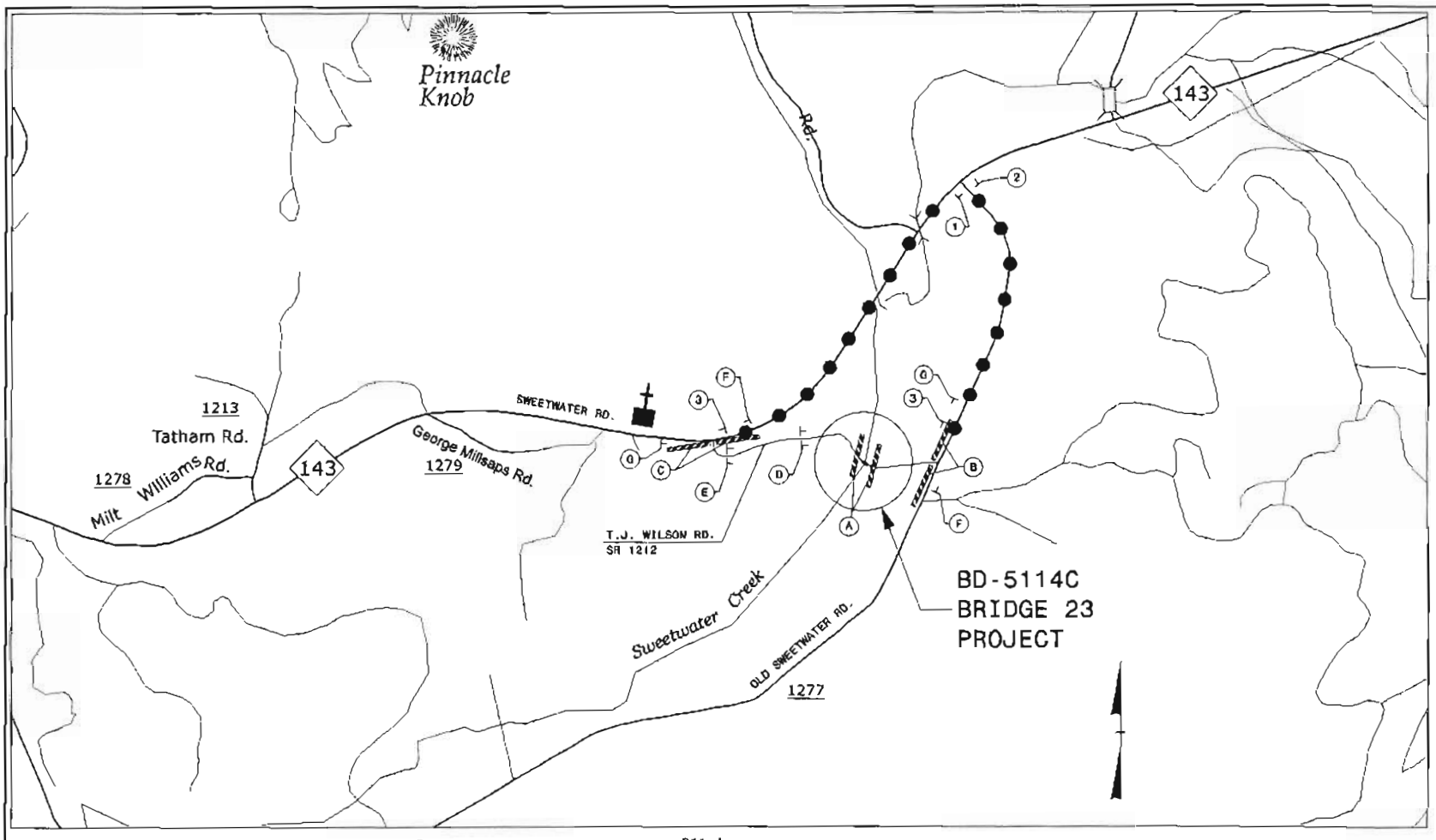

DETOUR ROUTE

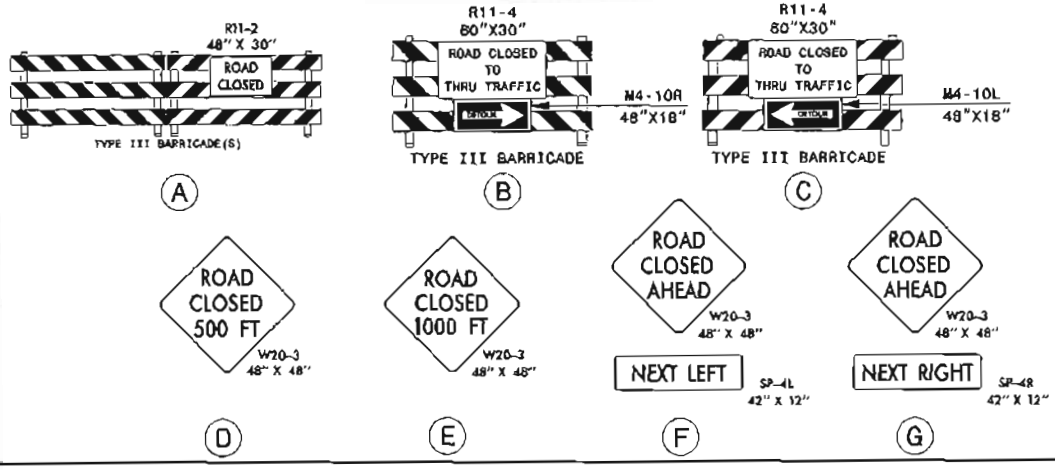

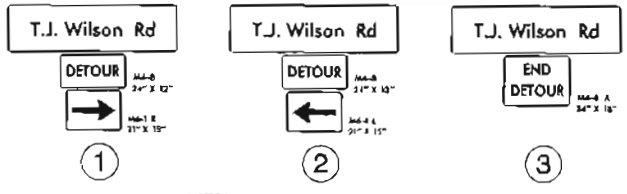

NOTES:

TRAFFIC CONTROL DEVICES (A) THRU (G) SHALL BE INSTALLED ACCORDING TO ROADWAY STANDARD DRAWING 1101.03, SHEET 1 OF 9.

TRAFFIC CONTROL DEVICES (1) THRU (3) SHALL BE INSTALLED AS PER ENGINEER'S INSTRUCTION.

APPROVED [signature] DATE 4/18/12

NORTH CAROLINA PROFESSIONAL SEAL 02-1856 KAP PERSONNEL

OFFSITE DETOUR SIGNING AND ROAD CLOSURE SIGNING

SCALE	NONE
DATE	4/18/12
DWG. BY:	CSP
DESIGN BY:	CSP
REVIEWED BY	KAP

REVISIONS

STV / Ralph Whitehead Associates, Inc.
3000 West Morehead St. Ste 200
Charlotte, NC 28208
NC License Number F-0991

Vaughn & Melton Consulting Engineers
Asheville, North Carolina
Charlotte, North Carolina
Fort Oglethorpe, Tennessee
Greenville, South Carolina
Knoxville, Tennessee
Whitesburg, Kentucky
Spartanburg, South Carolina

4/17/2012
R:\Traffic\TrafficControl\TCP\BD5114C_TC_tcp3.dgn
Darkforce

PROJ. REFERENCE NO.	SHEET NO.
BD-5114C	TCP-4

SIGN NUMBER:
TYPE: STATIONARY
QUANTITY: SEE PLANS

SIGN WIDTH: 4'-6"
HEIGHT: 1'-0"
TOTAL AREA: 4.5 Sq.Ft.

BORDER TYPE: INSERT
RECESS: 0.5"
WIDTH: 0.5"
RADII: 3"

NO. Z BARS:
LENGTH:

BACKG COLOR: Fluorescent Orange
COPY COLOR: Black

SYMBOL	X	Y	WID	HT

MAT'L: 0.080" (2.0 mm) ALUMINUM
0.079" (2.0 mm) COMPOSITE

USE NOTES: 1,2

1. Legend and border shall be direct applied black non-reflective sheeting.
2. Background shall be Type VII, VIII, or IX (prismatic) fluorescent orange retroreflective sheeting.

DESIGN BY: KXT
PROJECT ID: BD-5114C
CHECKED BY: KAP
DIV: 14
DATE: Jul 11, 2011

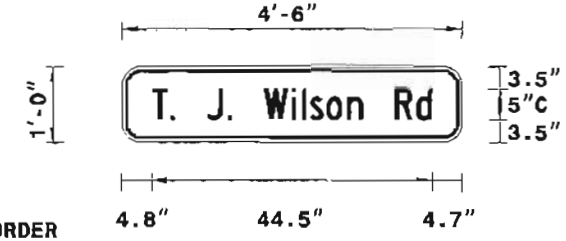

BORDER
R=3"
TH=0.5"
IN=0.5"

Spacing factor is 1 unless specified otherwise

LETTER POSITIONS

Letter spacings are to start of next letter

Series/Size
Text Length
C 2000
44.5

	T	.		J	.		W	i	l	s	o	n		R	d											
4.8	2.9	0.8	5	3.3	0.8	5	4.4	1.6	1.4	2.6	3.3	2.5	5	3.4	2.5	4.7										

FILENAME: T. J. Wilson Rd

NORTH CAROLINA D.O.T. SIGN DETAIL

V&M Vaughn & Melton Consulting Engineers
Charlotte, North Carolina
Tri-Cities, Tennessee
Knoxville, Tennessee
Middlesboro, Kentucky
Spartanburg, South Carolina
Asheville, North Carolina

STV/Ralph Whitehead Associates, Inc.
1000 West Morehead St., Ste. 200
Charlotte, NC 28208
NC License Number F-0991

APPROVED: [signature] DATE: 4/18/12

NORTH CAROLINA SEAL 021665 ENGINEER

SPECIAL SIGN DESIGN

SCALE:	NONE
DATE:	4/18/12
DRAWN BY:	CSP
DESIGN BY:	CSP
REVIEWED BY:	KAP

REVISIONS

4/11/2012
R:\Traffic\Traffic Control\TCP\BD5114C_TC_tcp4.cgn

THESE EROSION AND SEDIMENT CONTROL PLANS COMPLY WITH THE REGULATIONS SET FORTH BY THE NCG-010000 GENERAL CONSTRUCTION PERMIT EFFECTIVE AUGUST 3, 2010 ISSUED BY THE NORTH CAROLINA DEPARTMENT OF ENVIRONMENT AND NATURAL RESOURCES DIVISION OF WATER QUALITY.

NOTES: ANY DEVIATION FROM OPTIONS GIVEN WILL REQUIRE PRIOR APPROVAL BY ENGINEER.

ADDITIONAL EROSION CONTROL DEVICES MAY NEED TO BE INSTALLED AS DIRECTED BY THE ENGINEER.

EROSION CONTROL PLAN

NOT TO SCALE

PROJECT REFERENCE NO.	SHEET NO.
BD-5114C	EC1/CONST.4
R/W SHEET NO.	
ROADWAY DESIGN ENGINEER	HYDRAULICS ENGINEER

ANNE GAMBER
LEVEL IIIA NAME

3022
LEVEL IIIA CERTIFICATION NO.

CLEARING AND GRUBBING
EROSION CONTROL FOR
CONSTRUCTION SHEET 4

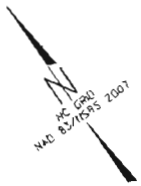

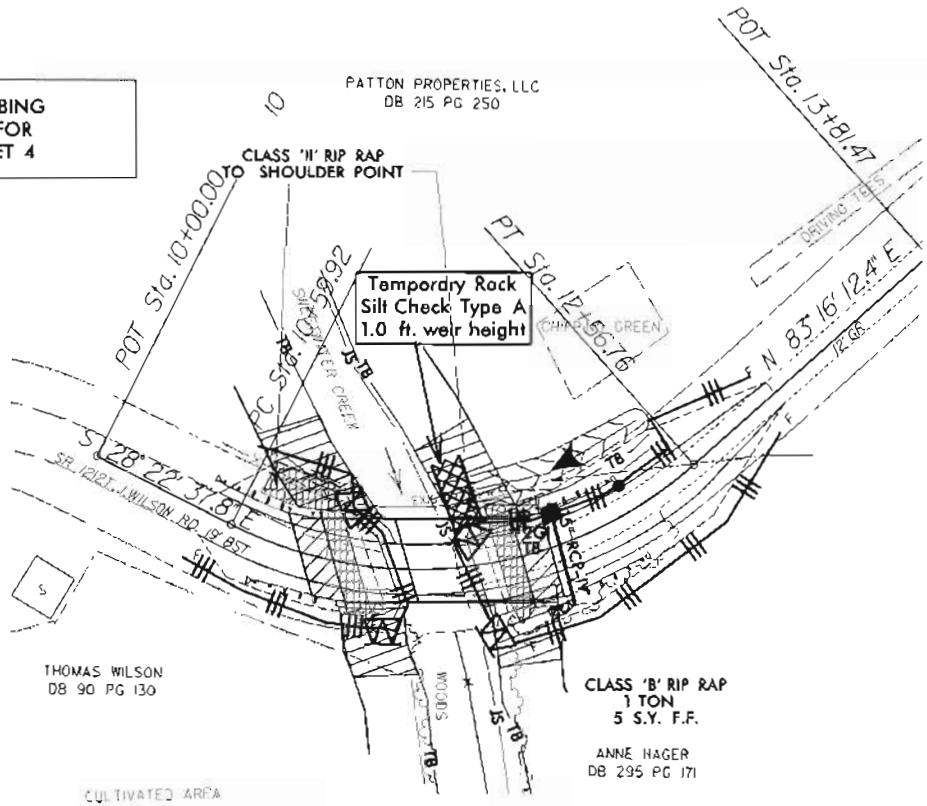

ROADSIDE ENVIRONMENTAL UNIT
DEPARTMENT OF TRANSPORTATION
DIVISION OF HIGHWAYS
RALEIGH, N.C.

2012 STANDARD SPECIFICATIONS

2012 STANDARD DRAWINGS

1604.01	Railroad Erosion Control Detail	1632.01	Rock Inlet Sediment Trap Type A
1605.01	Temporary Silt Fence	1632.02	Rock Inlet Sediment Trap Type B
1606.01	Special Sediment Control Fence	1632.03	Rock Inlet Sediment Trap Type C
1607.01	Gravel Construction Entrance	1633.01	Temporary Rock Silt Check Type A
1622.01	Temporary Berms and Slope Drains	1633.02	Temporary Rock Silt Check Type B
1630.01	Riser Basin	1634.01	Temporary Rock Sediment Dam Type A
1630.02	Silt Basin Type B	1634.02	Temporary Rock Sediment Dam Type B
1630.03	Temporary Silt Ditch	1635.01	Rock Pipe Inlet Sediment Trap Type A
1630.04	Skimmer Basin	1635.02	Rock Pipe Inlet Sediment Trap Type B
1630.05	Temporary Diversion	1640.01	Coir Fiber Baffle
1630.06	Special Skimmer Basin	1645.01	Temporary Stream Crossing
1631.01	Matting Installation		

Std. #	Description	Symbol
1605.01	Temporary Silt Fence	
1606.01	Special Sediment Control Fence	
1632.02	Rock Inlet Sediment Trap Type B	
1632.03	Rock Inlet Sediment Trap Type C	
1633.01	Temporary Rock Silt Check Type A	

TROUT STREAM BUFFER ZONE

PROJECT NO. BD-5114C
COUNTY GRAHAM
STATION: 11+41
REPLACES BRIDGE NO. 023

STATE OF NORTH CAROLINA
DEPARTMENT OF TRANSPORTATION
RALEIGH

BRIDGE #023 ON SR 1212
OVER SWEETWATER CREEK

REVISIONS								SHEET NO.
NO.	BY	DATE	NO.	BY	DATE			EC-1
1			3					TOTAL SHEETS
2			4					1

THESE EROSION AND SEDIMENT CONTROL PLANS COMPLY WITH THE REGULATIONS SET FORTH BY THE NCG-010000 GENERAL CONSTRUCTION PERMIT EFFECTIVE AUGUST 3, 2011 ISSUED BY THE NORTH CAROLINA DEPARTMENT OF ENVIRONMENT AND NATURAL RESOURCES DIVISION OF WATER QUALITY

NOTES. ANY DEVIATION FROM OPTIONS GIVEN WILL REQUIRE PRIOR APPROVAL BY ENGINEER.

ADDITIONAL EROSION CONTROL DEVICES MAY NEED TO BE INSTALLED AS DIRECTED BY THE ENGINEER.

EROSION CONTROL PLAN

NOT TO SCALE

PROJECT REFERENCE NO.	SHEET NO.
BD-5114C	EC2/CONST.4
R/W SHEET NO.	
ROADWAY DESIGN ENGINEER	HYDRAULICS ENGINEER

ANNE GAMBER
LEVEL IIIA NAME

3022
LEVEL IIIA CERTIFICATION NO.

FINAL
EROSION CONTROL FOR
CONSTRUCTION SHEET 4

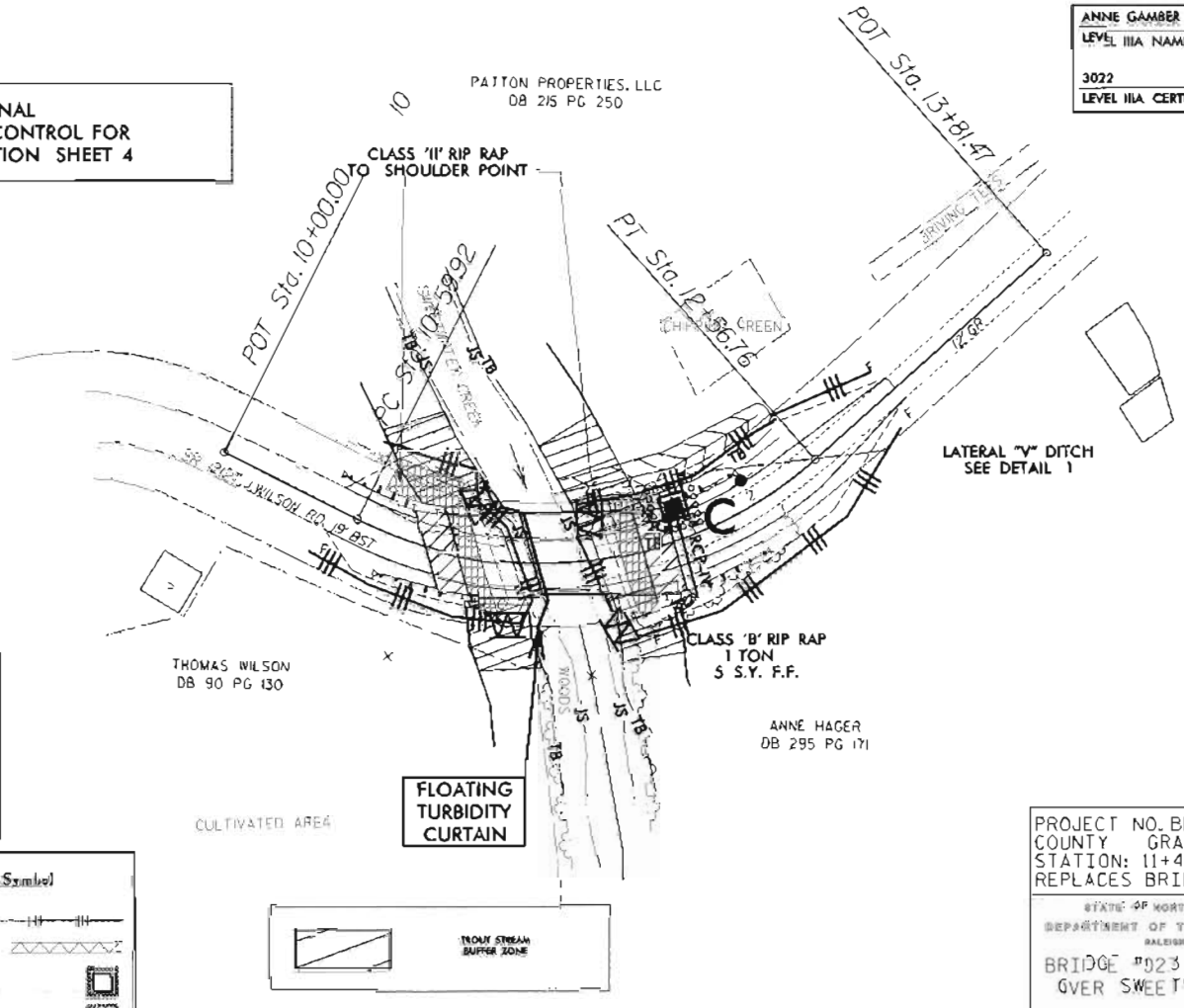

ROADSIDE ENVIRONMENTAL UNIT
DEPARTMENT OF TRANSPORTATION
DIVISION OF HIGHWAYS
RALEIGH N.C.

2012 STANDARD SPECIFICATIONS

2012 STANDARD DRAWINGS

1604.01	Railroad Erosion Control Detail	1632.01	Rock Inlet Sediment Trap Type A
1605.01	Temporary Silt Fence	1632.02	Rock Inlet Sediment Trap Type B
1606.01	Special Sediment Control Fence	1632.03	Rock Inlet Sediment Trap Type C
1607.01	Gravel Construction Entrance	1633.01	Rock Silt Check Type A
1622.01	Temporary Berm and Slope Drain	1633.02	Temporary Rock Silt Check Type B
1630.01	Riser Basin	1634.01	Temporary Rock Sediment Dam Type A
1630.02	Silt Basin Type B	1634.02	Temporary Rock Sediment Dam Type B
1630.03	Temporary Silt Ditch	1635.01	Rock Pipe Inlet Sediment Trap Type A
1630.04	Skimmer Basin	1635.02	Rock Pipe Inlet Sediment Trap Type B
1630.05	Temporary Diversion	1640.01	Coir Fiber Baffle
1630.06	Special Silting Basin	1645.01	Temporary Stream Crossing
1631.01	Matting Installation		

Std. #	Description	Symbol
1605.01	Temporary Silt Fence	
1606.01	Special Sediment Control Fence	
1632.02	Rock Inlet Sediment Trap Type B	
1632.03	Rock Inlet Sediment Trap Type C	
1633.01	Temporary Rock Silt Check Type A	

PROJECT NO. BD-5114C
COUNTY GRAHAM
STATION: 11+41
REPLACES BRIDGE NO. 023

STATE OF NORTH CAROLINA
DEPARTMENT OF TRANSPORTATION
RALEIGH

BRIDGE #023 ON SR 1212
OVER SWEETWATER CREEK

REVISIONS							
NO.	BY	DATE	NO.	BY	DATE	SHEET NO.	TOTAL SHEETS
1			3			EC-1	
2			4				

PROJECT REFERENCE NO.	SHEET NO.
BD-5114C	EC-3
ROADWAY DESIGN ENGINEER	HYDRAULICS ENGINEER

DIVISION OF HIGHWAYS
STATE OF NORTH CAROLINA

SOIL STABILIZATION SUMMARY SHEET

MATTING FOR EROSION CONTROL

CONST SHEET NO.	LINE	FROM STATION	TO STATION	SIDE	ESTIMATE (SY)
4	L	11+57	12+50	LT	135
				SUBTOTAL	135
MISCELLANEOUS MATTING TO BE INSTALLED AS DIRECTED BY THE ENGINEER					
				TOTAL	135
				SAY	135

MATTING FOR EROSION CONTROL

CONST SHEET NO.	LINE	FROM STATION	TO STATION	SIDE	ESTIMATE (SY)

PROJECT REFERENCE NO	SHEET NO
BD-5146C	EC-3A
ROADWAY DESIGN ENGINEER	HYDRAULICS ENGINEER

DIVISION OF HIGHWAYS
STATE OF NORTH CAROLINA

SOIL STABILIZATION TIMEFRAMES

SITE DESCRIPTION	STABILIZATION TIME	TIMEFRAME EXCEPTIONS
PERIMETER DIKES, SWALES, DITCHES AND SLOPES	7 DAYS	NONE
HIGH QUALITY WATER (HQW) ZONES	7 DAYS	NONE
SLOPES STEEPER THAN 3:1	7 DAYS	IF SLOPES ARE 10' OR LESS IN LENGTH AND ARE NOT STEEPER THAN 2:1, 14 DAYS ARE ALLOWED.
SLOPES 3:1 OR FLATTER	14 DAYS	7 DAYS FOR SLOPES GREATER THAN 50' IN LENGTH.
ALL OTHER AREAS WITH SLOPES FLATTER THAN 4:1	14 DAYS	NONE, EXCEPT FOR PERIMETERS AND HQW ZONES.

TIP PROJECT: BD-5114C

T.I.P. NO.	SHEET NO.
BD-5114C	UO-1

STATE OF NORTH CAROLINA
DIVISION OF HIGHWAYS

UTILITIES BY OTHERS PLANS
GRAHAM COUNTY

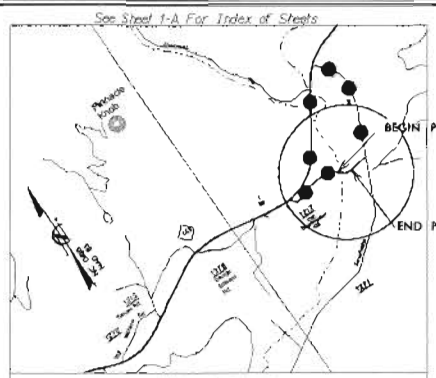

VICINITY MAP

DETOUR ROUTE

LOCATION: BRIDGE #23 OVER SWEETWATER CREEK ON SR 1212 (T.J. WILSON ROAD)

TYPE OF WORK: AERIAL TELEPHONE

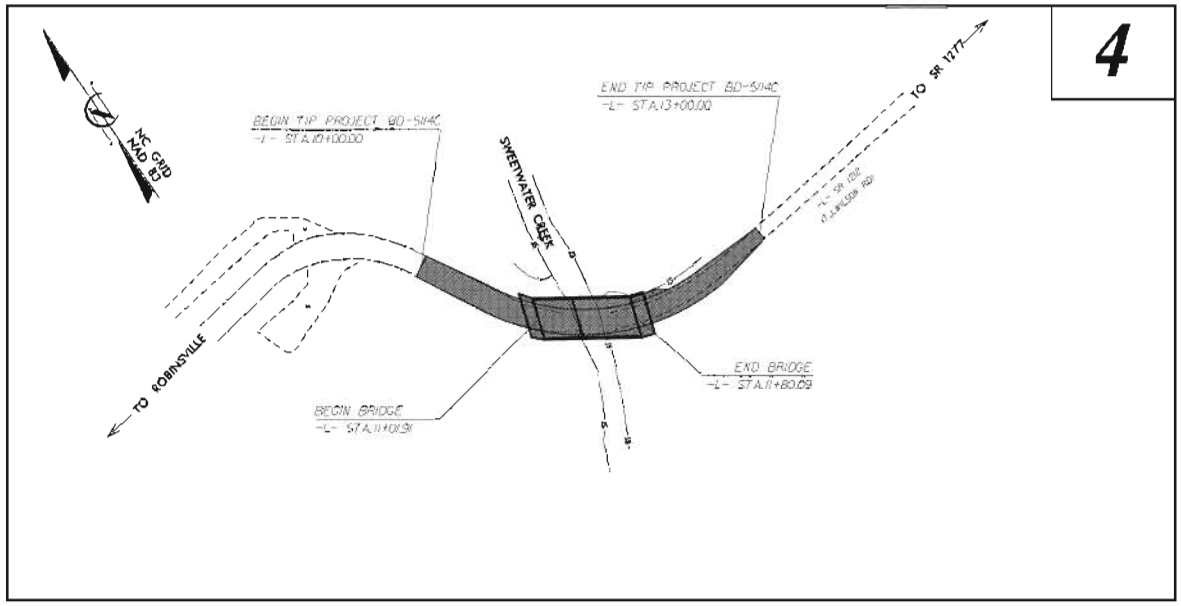

GRAPHIC SCALES

20 10 0 20 40

PLANS

INDEX OF SHEETS

SHEET NO.	DESCRIPTION
UO-1	TITLE SHEET
UO-2	UTILITY BY OTHERS PLAN SHEETS

UTILITY OWNERS ON PROJECT

(1) TELEPHONE - FRONTIER COMMUNICATIONS

SEAL

Vanasse & Hatton
Consulting Engineers
3089-L Beam Road
Charlotte, NC 28217
FAX: 357-8488

PREPARED IN THE OFFICE OF
DIVISION OF HIGHWAYS
UTILITIES ENGINEERING SECTION
1591 MAIL SERVICE CENTER
RALEIGH, NC 27699-1591
PHONE: (919) 250-4128
FAX: (919) 250-4119

Roger Worthington, P.E.	UTILITIES SECTION ENGINEER
Xxxxx Xxxxx, P.E.	UTILITIES SQUAD LEADER PROJECT ENGINEER
Bruce Schuler, PE	UTILITIES PROJECT DESIGNER

PROJECT REFERENCE NO	SHEET NO
BD-5114C	UO-2

UTILITIES BY OTHERS

NOTE:
ALL PROPOSED UTILITY WORK SHOWN ON THIS SHEET WILL BE DONE BY OTHERS

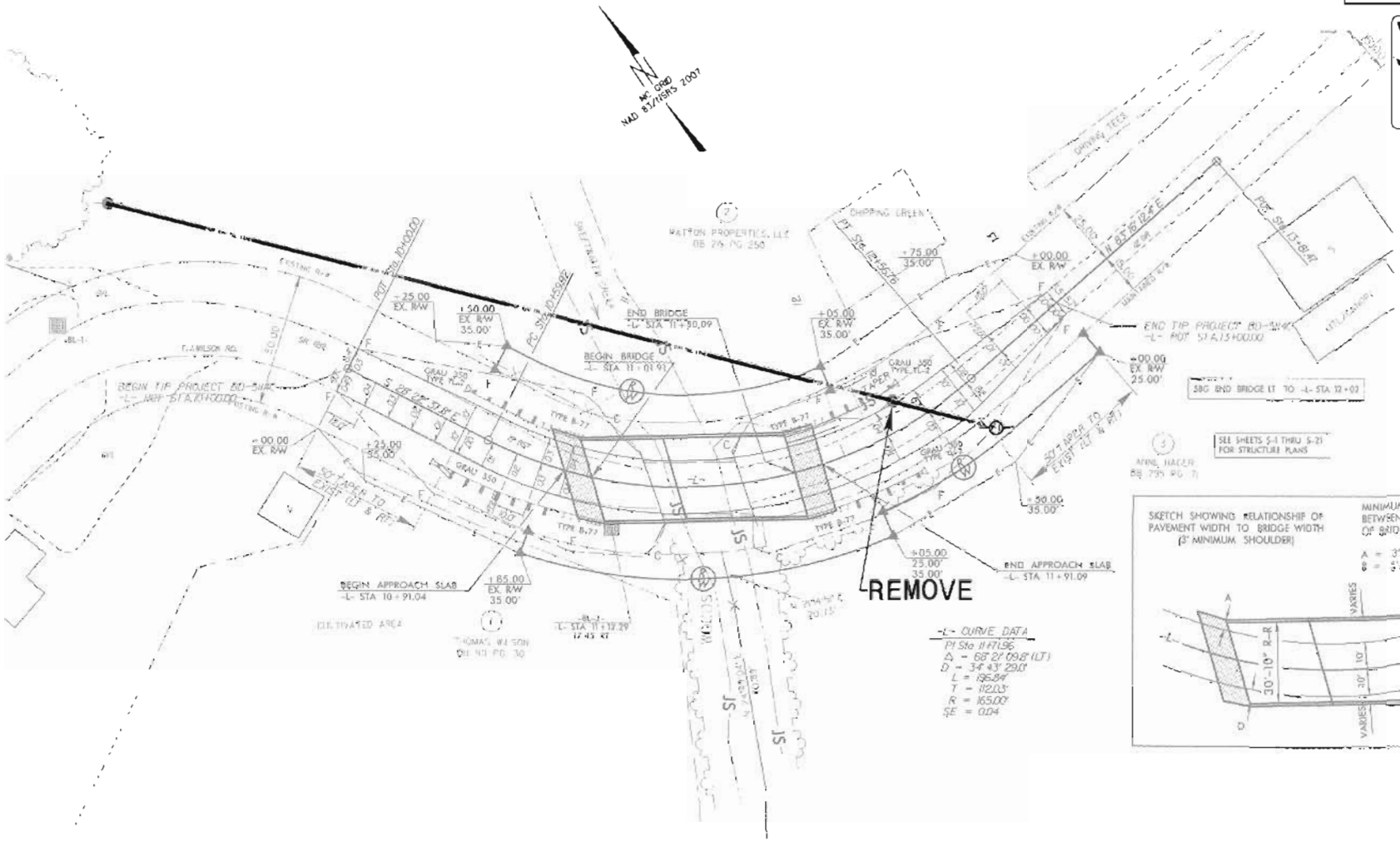

REVISIONS

8/17/09

COMPUTED BY: ZHM	DATE: 12/27/11
CHECKED BY: ACC	DATE: 12/27/11

PROJECT REFERENCE NO	SHEET NO
BD-5114C	X-0

DIVISION OF HIGHWAYS
STATE OF NORTH CAROLINA

CROSS SECTION SUMMARY

IN CUBIC YARDS

-L- LOCATION	UNCLASSIFIED EXCAVATION	EMBT
10+00	0	0
10+50	14	19
11+00	39	26
11+01.91 BEGIN BRIDGE	2	1
11+80.09 END BRIDGE	0	0
12+00	6	35
12+50	21	65
13+00	14	21

NOTE: EMBANKMENT COLUMN DOES NOT INCLUDE BACKFILL FOR UNDERCUT

Approximate quantities only. Unclassified excavation, borrow excavation, fine grading, clearing and grubbing, and removal of existing pavement will be paid for at the contract lump sum price for "grading"

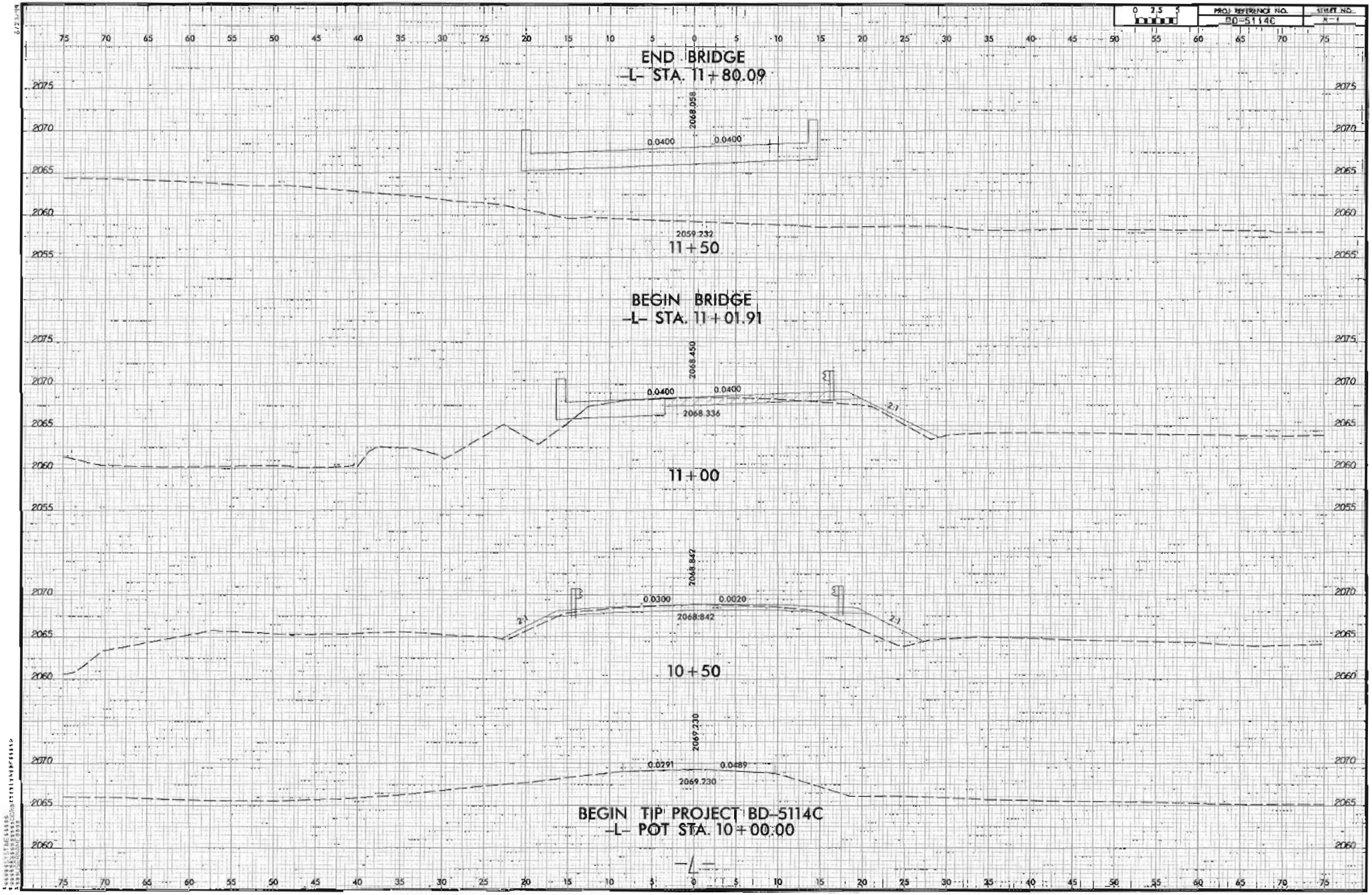
PROJ. REFERENCE NO.
BD-5114C
SHEET NO.
X-1
END BRIDGE
-L- STA. 11+80.09
2068.058
0.0400
0.0400
2059.232
11+50
BEGIN BRIDGE
-L- STA. 11+01.91
2068.450
0.0400
0.0400
2068.336
2:1
11+00
2068.842
0.0300
0.0020
2068.842
2:1
2:1
10+50
2069.230
0.0291
0.0489
2069.230
BEGIN TIP PROJECT BD-5114C
-L- POT STA. 10+00.00
-L-

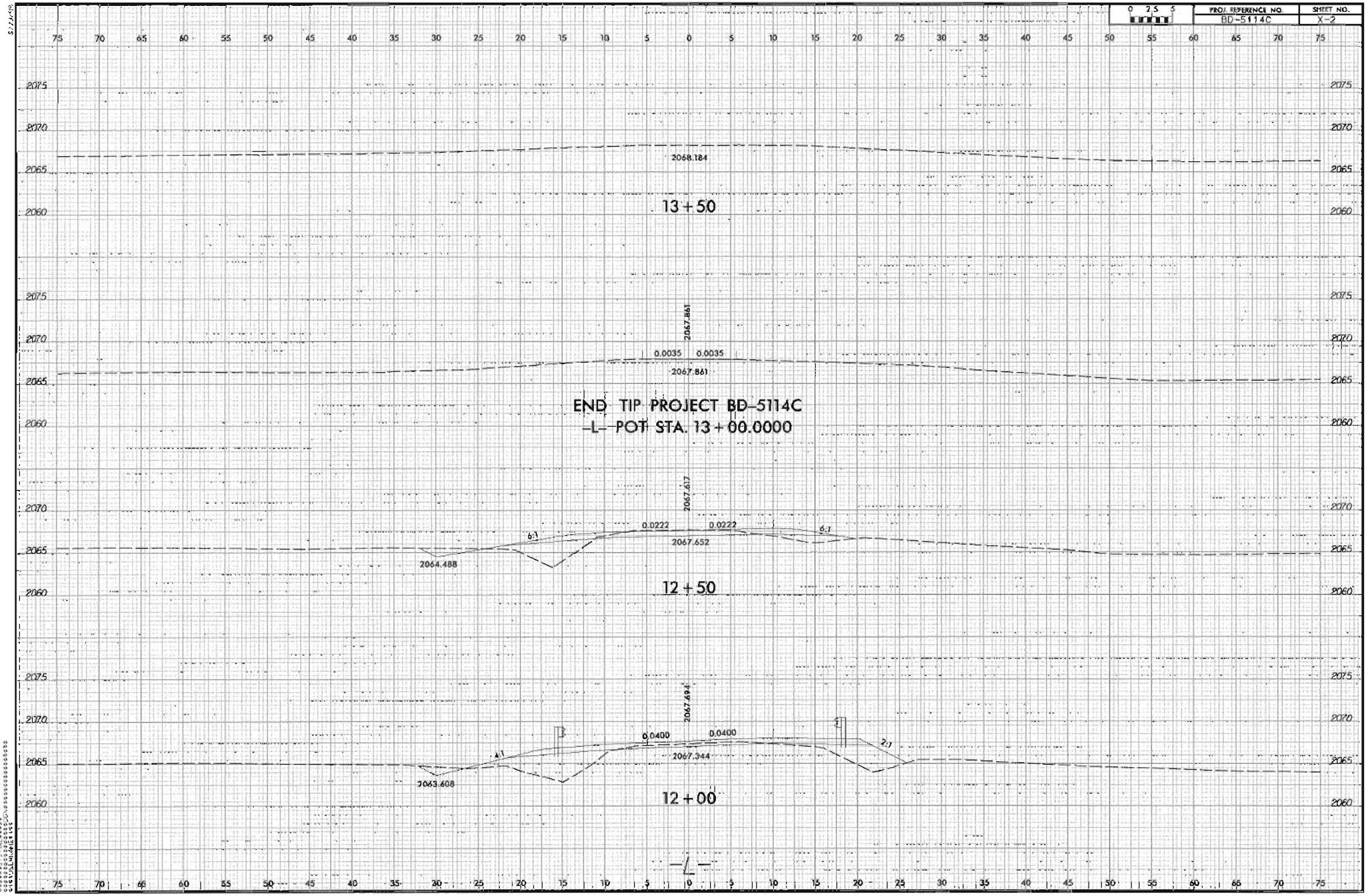
0 2.5 5
PROJ. REFERENCE NO.
BD-5114C
SHEET NO.
X-2
2068.184
13+50
2067.861
0.0035
0.0035
2067.861
END TIP PROJECT BD-5114C
-L- POT STA. 13+00.0000
2067.617
0.0222
0.0222
6:1
6:1
2067.652
2064.488
12+50
2067.694
0.0400
0.0400
2:1
2:1
2067.344
2063.608
12+00
-L-

TIP NO: BD-5114C

CONTRACT: DN00071

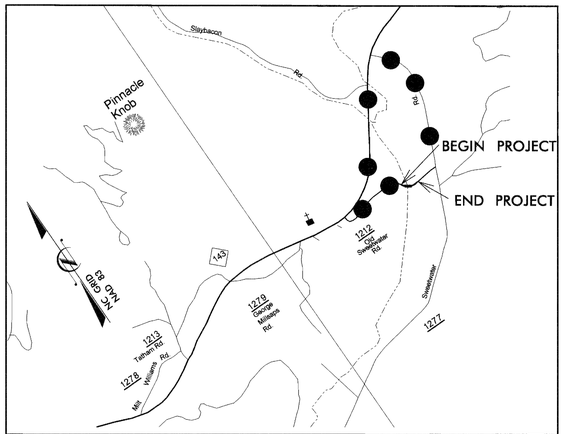

VICINITY MAP

DETOUR ROUTE

STATE OF NORTH CAROLINA
DIVISION OF HIGHWAYS

GRAHAM COUNTY

STATE	STATE PROJECT REFERENCE NO.	SHEET NO.	TOTAL SHEETS
N.C.	BD-5114C	S-0	

STATE PROJ. NO.	F. A. PROJ. NO.	DESCRIPTION
45360.1.3	BRZ-1212(6)	P.E.
45360.2.3	BRZ-1212(6)	R/W
45360.3.3	BRZ-1212(6)	CONST.

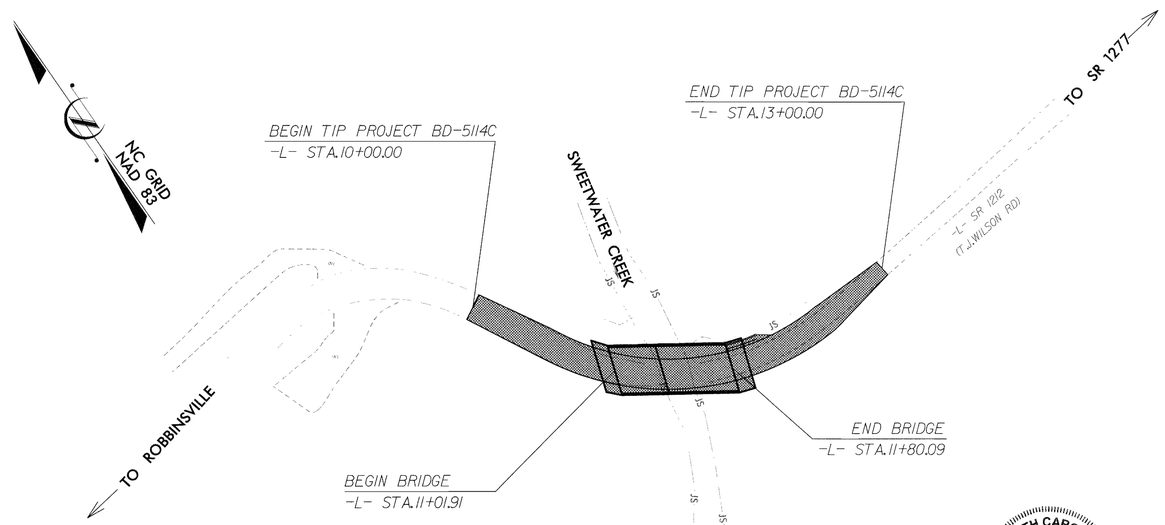

STRUCTURES

NORTH CAROLINA PROFESSIONAL SEAL 20777 ENGINEER HARDY L. WILLIS 6/26/12

V&M Vaughn & Melton Consulting Engineers
Asheville, North Carolina 828-253-2796
Charlotte, North Carolina 704-357-0488
Tri-Cities, Tennessee 423-467-8401
Knoxville, Tennessee 865-546-5800
Middlesboro, Kentucky 606-248-6600
Spartanburg, South Carolina 864-574-4775

Copyright © 2006 Vaughn & Melton, Inc. All Rights Reserved

STATE OF NORTH CAROLINA DEPARTMENT OF TRANSPORTATION

DESIGN DATA

PROJECT LENGTH

LENGTH ROADWAY TIP PROJECT BD-5114C = 0.042 MI.
LENGTH STRUCTURE TIP PROJECT BD-5114C = 0.015 MI.
TOTAL LENGTH OF TIP PROJECT BD-5114C = 0.057 MI.

Prepared In the Office of:
VAUGHN & MELTON
1318-F PATTON AVE.
ASHEVILLE NC. 28806
FOR THE NORTH CAROLINA DIVISION OF HIGHWAYS

2012 STANDARD SPECIFICATIONS

LETTING DATE :
JULY 24, 2012

HARDY WILLIS, PE
PROJECT ENGINEER

AARON CARVER, PE
PROJECT DESIGN ENGINEER

STRUCTURES MANAGEMENT UNIT
1000 BIRCH RIDGE DR.
RALEIGH, N.C. 27610

DIVISION OF HIGHWAYS
STATE OF NORTH CAROLINA

JOSH DEYTON P.E.
STATE DESIGN ENGINEER

DEPARTMENT OF TRANSPORTATION
FEDERAL HIGHWAY ADMINISTRATION

APPROVED
DIVISION ADMINISTRATOR DATE

F. A. PROJECT BRZ-1212(6)

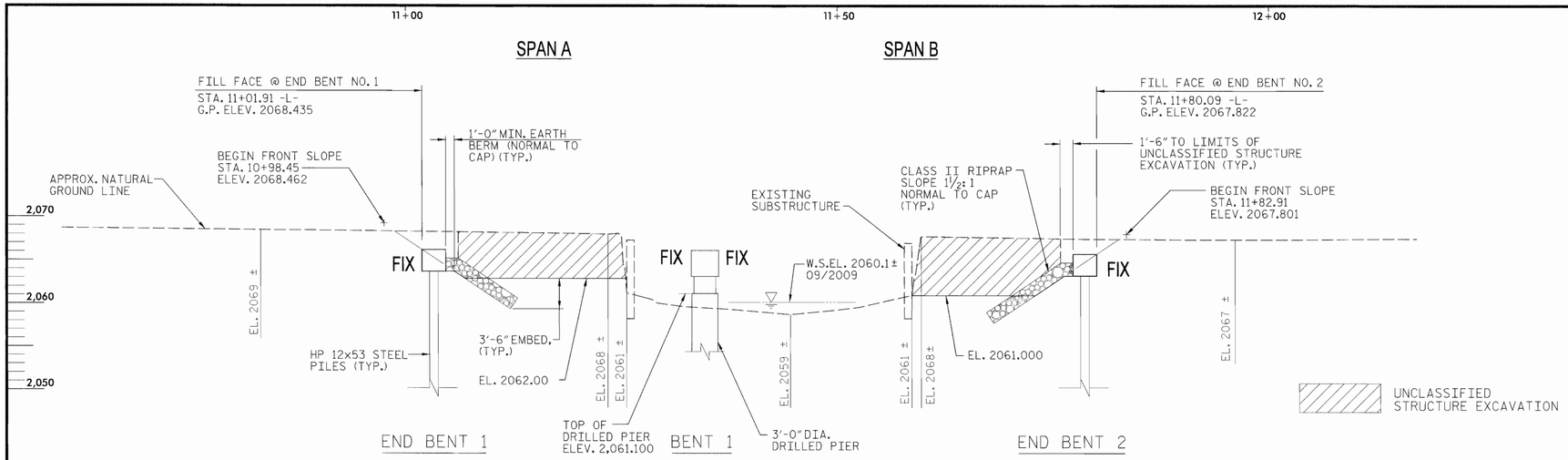

SECTION ALONG ℄ SURVEY -L-

SECTIONS AT END BENTS AND BENT ARE AT RIGHT ANGLES.

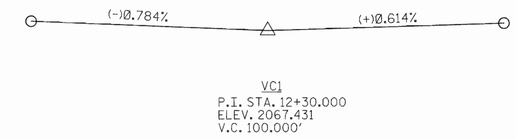

GRADE DATA -L-

PI Sta 11+71.96
△ = 68° 21' 09.8" (LT)
D = 34° 43' 29.0"
L = 196.84'
T = 112.03'
R = 165.00'

HORIZONTAL CURVE DATA -L-

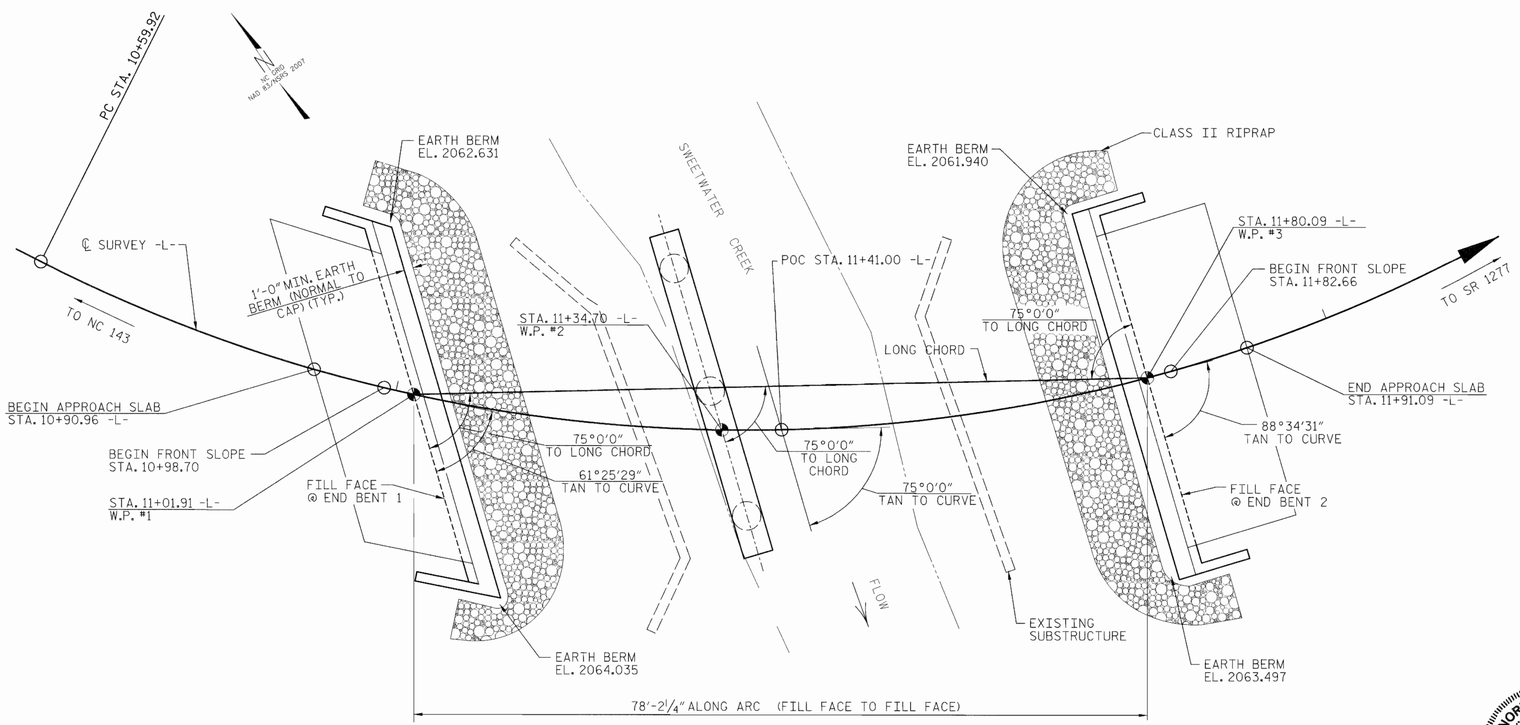

PLAN ALONG ℄ SURVEY -L-

NOTES: END BENTS AND BENT ARE PARALLEL.
CORED SLABS ARE PARALLEL TO LONG CHORD.
PILES ARE NOT SHOWN IN PLAN VIEW FOR CLARITY.

I HEREBY CERTIFY THAT THESE PLANS ARE THE AS-BUILT PLANS.

NORTH CAROLINA PROFESSIONAL SEAL 20777 ENGINEER HARDY L. WILLIS
10/26/12

PROJECT NO. BD-5114C
GRAHAM COUNTY
STATION: 11+41.00 -L-

SHEET 1 OF 3 REPLACES BRIDGE NO. 23

V&M
Vaughn & Melton
Consulting Engineers
Asheville, North Carolina 828-253-2796
Charlotte, North Carolina 704 895 9051
Tri-Cities, Tennessee 423 467 8401
Knoxville, Tennessee 865 546 5800
Middlesboro, Kentucky 606 248 6600
Spartanburg, South Carolina 864-574-4775

Copyright © 2006 Vaughn & Melton, Inc.
All Rights Reserved

STATE OF NORTH CAROLINA
DEPARTMENT OF TRANSPORTATION
RALEIGH

GENERAL DRAWING
FOR BRIDGE on
SR 1212 (T. J. WILSON RD.)
over SWEETWATER CREEK
Between NC 143 & SR 1277

JUN 2012

REVISIONS						SHEET NO.
NO.	BY:	DATE:	NO.	BY:	DATE:	S-1
1			3			TOTAL SHEETS
2			4			21

DWN. BY: MAF DATE: JUN 2012
CHKD. BY: HLW DATE: JUN 2012

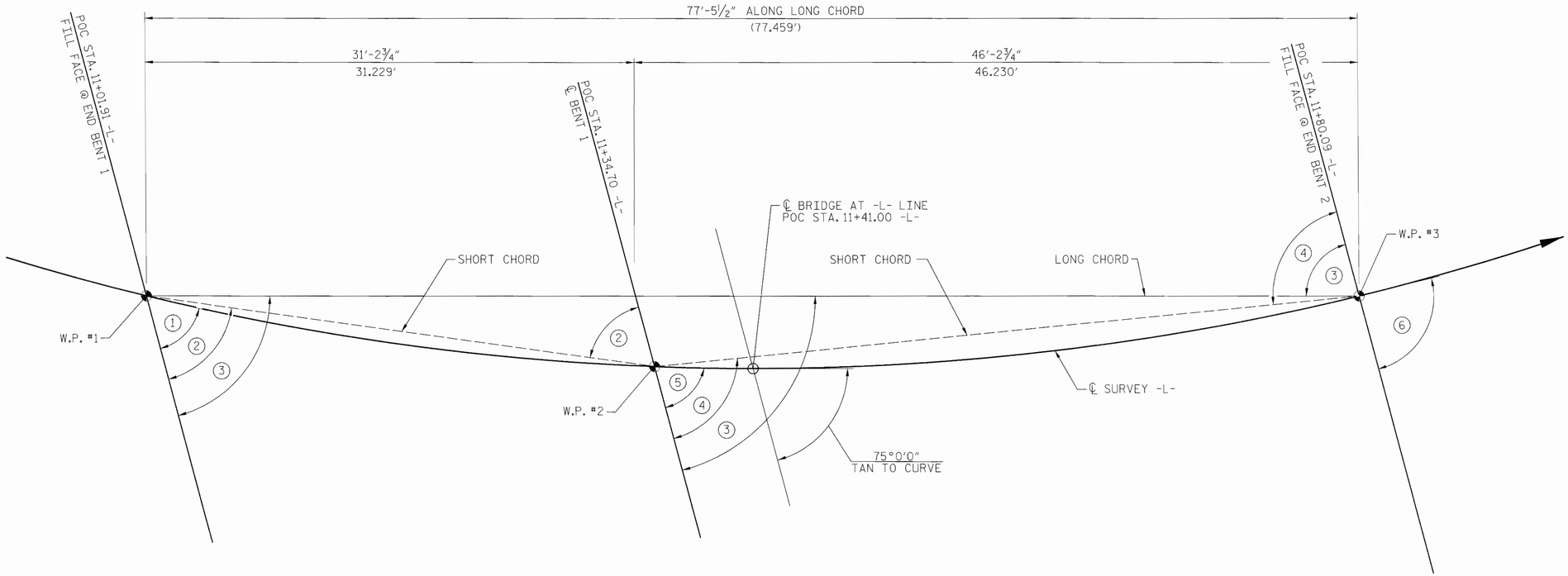

① 61°25'29" TAN TO CURVE, ℄ SURVEY -L-

② 67°07'07" TO SHORT CHORD

③ 75°0'0" TO LONG CHORD

④ 80°41'38" TO SHORT CHORD

⑤ 72°48'46" TAN TO CURVE, ℄ SURVEY -L-

⑥ 88°34'31" TAN TO CURVE, ℄ SURVEY -L-

LONG CHORD LAYOUT

END BENTS AND BENT ARE PARALLEL.

PI Sta 11+71.96
△ = 68° 21' 09.8" (LT)
D = 34° 43' 29.0"
L = 196.84'
T = 112.03'
R = 165.00'

HORIZONTAL CURVE DATA -L-

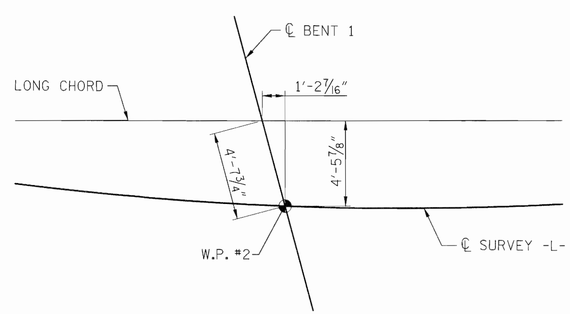

W.P. 2

PROJECT NO. BD-5114C

GRAHAM COUNTY

STATION: 11+41.00 -L-

SHEET 2 OF 3

STATE OF NORTH CAROLINA
DEPARTMENT OF TRANSPORTATION
RALEIGH

GENERAL DRAWING
FOR BRIDGE on
SR 1212 (T. J. WILSON RD.)
over SWEETWATER CREEK
Between NC 143 & SR 1277

JUN 2012

NORTH CAROLINA PROFESSIONAL SEAL 20770 ENGINEER HARDY L. WILLIS
6/26/12

V&M
Vaughn & Melton
Consulting Engineers
Asheville, North Carolina 828-253-2796
Charlotte, North Carolina 704 895 9051
Tri-Cities, Tennessee 423-467-8401
Knoxville, Tennessee 865 546 5800
Middlesboro, Kentucky 606-248-6600
Spartanburg, South Carolina 864-574-4775

Copyright © 2006 Vaughn & Melton, Inc. All Rights Reserved

DWN. BY: MAF DATE: JUN 2012
CHKD. BY: HLW DATE: JUN 2012

REVISIONS						SHEET NO.
NO.	BY:	DATE:	NO.	BY:	DATE:	S-2
1			3			TOTAL SHEETS
2			4			21

BL-2 - N 607334.7360 E 576996.6450 ELEV 2067.47, -L- STA 11+12.29 17.45 RT

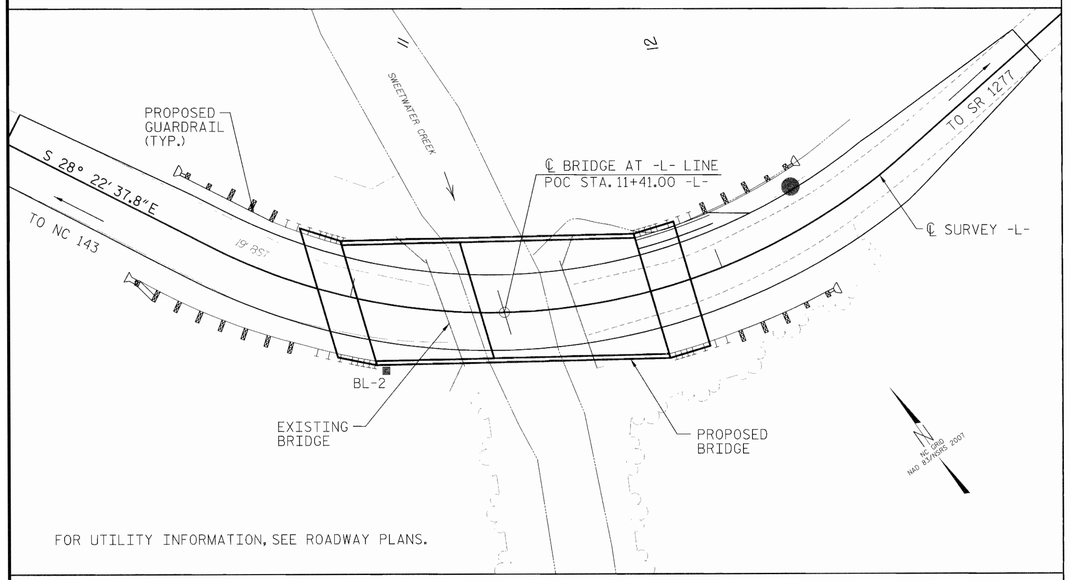

FOR UTILITY INFORMATION, SEE ROADWAY PLANS.

LOCATION SKETCH

GENERAL NOTES:

ASSUMED LIVE LOAD = HL 93 OR ALTERNATE LOADING.

THIS BRIDGE HAS BEEN DESIGNED IN ACCORDANCE WITH THE REQUIREMENTS OF THE AASHTO LRFD BRIDGE DESIGN SPECIFICATIONS. THIS BRIDGE IS LOCATED IN SEISMIC PERFORMANCE ZONE 1. NO DETAILED SEISMIC DESIGN IS REQUIRED.

FOR OTHER DESIGN DATA AND GENERAL NOTES, SEE "STANDARD NOTES" SHEET

FOR EROSION CONTROL MEASURES, SEE EROSION CONTROL PLANS.

THE EXISTING STRUCTURE, CONSISTING OF A ONE SPAN, 35.5 FOOT LONG TIMBER DECK ON STEEL I-BEAMS, 20-FEET WIDE, ON TIMBER CAPS/TIMBER POST AND SILL END BENTS, AND LOCATED AT THE PROPOSED STRUCTURE, SHALL BE REMOVED. THE EXISTING BRIDGE IS PRESENTLY POSTED BELOW THE LEGAL LOAD LIMIT. SHOULD THE STRUCTURAL INTEGRITY OF THE BRIDGE FURTHER DETERIORATE, THIS LOAD LIMITATION MAY BE REDUCED AS FOUND NECESSARY DURING THE LIFE OF THE PROJECT.

REMOVAL OF THE EXISTING BRIDGE SHALL BE PERFORMED SO AS NOT TO ALLOW DEBRIS TO FALL INTO THE WATER. THE CONTRACTOR SHALL REMOVE THE BRIDGE AND SUBMIT PLANS FOR DEMOLITION IN ACCORDANCE WITH ARTICLE 402-2 OF THE STANDARD SPECIFICATIONS.

THE SUBSTRUCTURE OF THE EXISTING BRIDGE INDICATED ON THE PLANS IS FROM THE BEST INFORMATION AVAILABLE. SINCE THIS INFORMATION IS SHOWN FOR THE CONVENIENCE OF THE CONTRACTOR, THE CONTRACTOR SHALL HAVE NO CLAIM WHATSOEVER AGAINST THE DEPARTMENT OF TRANSPORTATION FOR ANY DELAYS OR ADDITIONAL COST INCURRED BASED ON DIFFERENCES BETWEEN THE EXISTING BRIDGE SUBSTRUCTURE SHOWN ON THE PLANS AND THE ACTUAL CONDITIONS AT THE PROJECT SITE.

THIS STRUCTURE HAS BEEN DESIGNED IN ACCORDANCE WITH HEC 18, "EVALUATING SCOUR AT BRIDGES", MAY 2001.

FOR SUBMITTAL OF WORKING DRAWINGS, SEE SPECIAL PROVISIONS.

FOR FALSEWORK AND FORMWORK, SEE SPECIAL PROVISIONS.

FOR CRANE SAFETY, SEE SPECIAL PROVISIONS.

FOR GROUT FOR STRUCTURES, SEE SPECIAL PROVISIONS.

THE MATERIAL SHOWN IN THE CROSS-HATCHED AREA SHALL BE EXCAVATED FOR A DISTANCE OF 25 FT. EACH SIDE OF CENTERLINE ROADWAY AS DIRECTED BY THE ENGINEER. THIS WORK WILL BE PAID FOR AT THE CONTRACT LUMP SUM PRICE FOR UNCLASSIFIED STRUCTURE EXCAVATION. SEE SECTION 412 OF THE STANDARD SPECIFICATIONS.

ASPHALT WEARING SURFACE IS INCLUDED IN ROADWAY QUANTITY ON ROADWAY PLANS.

FOR PILES, SEE SECTION 450 OF THE STANDARD SPECIFICATIONS.

PILES AT END BENT NO. 1 ARE DESIGNED FOR A FACTORED RESISTANCE OF 55 TONS PER PILE.

DRIVE PILES AT END BENT NO. 1 TO A REQUIRED DRIVING RESISTANCE OF 92 TONS PER PILE.

FOR DRILLED PIERS, SEE SECTION 411 OF THE STANDARD SPECIFICATIONS.

DRILLED PIERS AT BENT NO. 1 ARE DESIGNED FOR A FACTORED RESISTANCE OF 285.0 TONS PER PIER. CHECK FIELD CONDITIONS FOR THE REQUIRED TIP RESISTANCE OF 30.0 TSF.

PERMANENT STEEL CASINGS ARE REQUIRED FOR DRILLED PIERS AT BENT NO. 1. DO NOT EXTEND PERMANENT CASINGS BELOW ELEVATION 2049.0 FT. WITHOUT PRIOR APPROVAL FROM THE ENGINEER.

INSTALL DRILLED PIERS AT BENT NO. 1 THAT EXTEND TO AN ELEVATION NO HIGHER THAN 2024.0 FT; SATISFY THE REQUIRED TIP RESISTANCE AND HAVE A PENETRATION OF AT LEAST 6 FT. INTO ROCK AS DEFINED BY ARTICLE 411-1 OF THE STANDARD SPECIFICATIONS.

THE SCOUR CRITICAL ELEVATION FOR BENT NO. 1 IS ELEVATION 2040.0 FT. SCOUR CRITICAL ELEVATIONS ARE USED TO MONITOR POSSIBLE SCOUR PROBLEMS DURING THE LIFE OF THE STRUCTURE.

SID INSPECTIONS MAY BE REQUIRED FOR THE DRILLED PIERS. THE ENGINEER WILL DETERMINE THE NEED FOR SID INSPECTIONS. FOR SID INSPECTIONS, SEE SECTION 411 OF THE STANDARD SPECIFICATIONS.

SPT TESTING MAY BE REQUIRED FOR DRILLED PIERS. THE ENGINEER WILL DETERMINE THE NEED FOR SPT TESTING. FOR SPT TESTING, SEE SECTION 411 OF THE STANDARD SPECIFICATIONS.

CSL TUBES ARE REQUIRED AND CSL TESTING MAY BE REQUIRED FOR THE DRILLED PIERS. THE ENGINEER WILL DETERMINE THE NEED FOR CSL TESTING. FOR CSL TESTING, SEE SECTION 411 OF THE STANDARD SPECIFICATIONS.

PILES AT END BENT NO. 2 ARE DESIGNED FOR A FACTORED RESISTANCE OF 65 TONS PER PILE.

DRIVE PILES AT END BENT NO. 2 TO A REQUIRED DRIVING RESISTANCE OF 108 TONS PER PILE.

THE CONTRACTOR SHALL PROVIDE INDEPENDENT ASSURANCE SAMPLES OF REINFORCING STEEL AS FOLLOWS: FOR PROJECTS REQUIRING UP TO 400 TONS OF REINFORCING STEEL, ONE 30 INCH SAMPLE OF EACH SIZE BAR USED, AND FOR PROJECTS REQUIRING OVER 400 TONS OF REINFORCING STEEL, TWO 30 INCH SAMPLES OF EACH SIZE BAR USED. THE BARS FROM WHICH THE SAMPLES ARE TAKEN MUST THEN BE SPLICED WITH REPLACEMENT BARS OF THE SIZE AND LENGTH OF THE SAMPLE, PLUS A MINIMUM LAP SPLICE OF THIRTY BAR DIAMETERS.

TOTAL BILL OF MATERIAL

	REMOVAL OF EXISTING STRUCTURE	3'-0" Ø DRILLED PIERS IN SOIL	3'-0" Ø DRILLED PIERS NOT IN SOIL	PERMANENT STEEL CASINGS FOR 3'-0" Ø DRILLED PIER	SID INSPECTIONS	SPT TESTING	CSL TESTING	UNCLASSIFIED STRUCTURE EXCAVATION	CLASS A CONCRETE	BRIDGE APPROACH SLABS	REINFORCING STEEL	SPIRAL COLUMN REINFORCING STEEL	HP 12 X 53 STEEL PILES		VERTICAL CONCRETE BARRIER RAIL	RIPRAP CLASS II (2'-0" THICK)	GEOTEXTILE FOR DRAINAGE	ELASTOMERIC BEARINGS	3'-0" x 1'-9" PRESTRESSED CONCRETE CORED SLAB UNIT	
	LUMP SUM	LIN. FT.	LIN. FT.	LIN. FT.	EACH	EACH	EACH	LUMP SUM	CU. YARDS	LUMP SUM	LBS.	LBS.	NO.	LIN. FT.	LIN. FT.	TONS	SQ. YARDS	LUMP SUM	NO.	LIN. FT.
SUPERSTRUCTURE															150.50			LUMP SUM	22	825.0
END BENT 1									14.6		2,186		7	140		75	85			
BENT 1		67.5	45.0	36.3	1	1	1		14.5		10,497	2,041								
END BENT 2									14.7		2,192		7	310		80	90			
TOTAL	LUMP SUM	67.5	45.0	36.3	1	1	1	LUMP SUM	43.8	LUMP SUM	14,875	2,041	14	450	150.50	155	175	LUMP SUM	22	825.0

HYDROGRAPHIC DATA

DESIGN DISCHARGE	= 1760 CFS
DESIGN FREQUENCY	= 10 YRS
DESIGN HW ELEVATION	= 2066.5 FT
BASE DISCHARGE	= 3570 CFS
BASE FREQUENCY	= 100 YRS
BASE HW ELEVATION	= 2069.2 FT

OVERTOPPING FLOOD DATA

OVERTOPPING DISCHARGE	= 2450 CFS
OVERTOPPING FREQUENCY	= 25 YRS
OVERTOPPING ELEVATION	= 2067.9 FT
DRAINAGE AREA	= 11.5 SQ. MI.

PROJECT NO. BD-5114C

GRAHAM COUNTY

STATION: 11+41.00 -L-

SHEET 3 OF 3

NORTH CAROLINA PROFESSIONAL SEAL 20777 ENGINEER HARDY L. WILLIS 6/26/12

V&M Vaughn & Melton Consulting Engineers
Asheville, North Carolina 828-253-2796
Charlotte, North Carolina 704-895-9051
Tri-Cities, Tennessee 423-467-8401
Knoxville, Tennessee 865-546-5800
Middlesboro, Kentucky 606-248-6600
Spartanburg, South Carolina 864-574-4775

Copyright © 2006 Vaughn & Melton, Inc. All Rights Reserved

DWN. BY: MAF DATE: JUN 2012
CHKD. BY: HLW DATE: JUN 2012

STATE OF NORTH CAROLINA
DEPARTMENT OF TRANSPORTATION
RALEIGH

GENERAL DRAWING
FOR BRIDGE on
SR 1212 (T. J. WILSON RD.)
over SWEETWATER CREEK
Between NC 143 & SR 1277

JUN 2012

REVISIONS						SHEET NO.
NO.	BY:	DATE:	NO.	BY:	DATE:	S-3
1			3			TOTAL SHEETS
2			4			21

LOAD AND RESISTANCE FACTOR RATING (LRFD) SUMMARY FOR PRESTRESSED CONCRETE GIRDERS

LEVEL		VEHICLE	WEIGHT (TONS)	CONTROLLING LOAD RATING	MINIMUM RATING FACTORS (RF)	TONS = W X RF	STRENGTH I LIMIT STATE											SERVICE III LIMIT STATE						COMMENT NUMBER
								MOMENT					SHEAR						MOMENT					
							LIVELOAD FACTORS	DISTRIBUTION FACTORS (DF)	RATING FACTOR	SPAN	GIRDER LOCATION	DISTANCE FROM LEFT END OF SPAN (FT)	DISTRIBUTION FACTORS (DF)	RATING FACTOR	SPAN	GIRDER LOCATION	DISTANCE FROM LEFT END OF SPAN (FT)	LIVELOAD FACTORS	DISTRIBUTION FACTORS (DF)	RATING FACTOR	SPAN	GIRDER LOCATION	DISTANCE FROM LEFT END OF SPAN (FT)	
DESIGN LOAD RATING		HL-93I(inv)	N/A	1	1.223	--	1.75	0.278	1.87	30'	EL	14.482	0.629	1.22	30'	EL	1.448	0.80	0.278	1.60	30	EL	14.482	
DESIGN LOAD RATING		HL-93I(opr)	N/A	--	1.586	--	1.35	0.278	2.42	30'	EL	14.482	0.629	1.59	30'	EL	1.448	N/A	--	--	--	--	--	
DESIGN LOAD RATING		HS-20(inv)	36.000	2	1.396	50.263	1.75	0.278	2.57	30'	EL	11.586	0.629	1.4	30'	EL	1.448	0.80	0.278	2.23	30'	EL	11.586	
DESIGN LOAD RATING		HS-20(opr)	36.000	--	1.81	65.156	1.35	0.278	3.34	30'	EL	11.586	0.629	1.81	30'	EL	1.448	N/A	--	--	--	--	--	
LEGAL LOAD RATING	SV	SNSH	13.500	--	3.415	46.108	1.4	0.278	5.27	30'	EL	14.482	0.629	3.42	30'	EL	1.448	0.80	0.278	3.61	30'	EL	14.482	
LEGAL LOAD RATING	SV	SNGARBS2	20.000	--	2.643	52.856	1.4	0.278	4.6	30'	EL	11.586	0.629	2.64	30'	EL	1.448	0.80	0.278	3.19	30'	EL	11.586	
LEGAL LOAD RATING	SV	SNAGRIS2	22.000	--	2.546	56.012	1.4	0.278	4.68	30'	EL	11.586	0.629	2.55	30'	EL	1.448	0.80	0.278	3.25	30'	EL	11.586	
LEGAL LOAD RATING	SV	SNCOTTS3	27.250	--	1.725	47.014	1.4	0.278	2.64	30'	EL	14.482	0.629	1.73	30'	EL	1.448	0.80	0.278	1.81	30'	EL	14.482	
LEGAL LOAD RATING	SV	SNAGORS4	34.925	--	1.588	55.465	1.4	0.278	2.55	30'	EL	14.482	0.629	1.59	30'	EL	1.448	0.80	0.278	1.74	30'	EL	14.482	
LEGAL LOAD RATING	SV	SN55A	33.550	--	1.684	59.866	1.4	0.278	2.46	30'	EL	14.482	0.629	1.68	30'	EL	1.448	0.80	0.278	1.69	30'	EL	14.482	
LEGAL LOAD RATING	SV	SN56A	39.950	--	1.583	63.244	1.4	0.278	2.33	30'	EL	14.482	0.629	1.58	30'	EL	1.448	0.80	0.278	1.60	30'	EL	14.482	
LEGAL LOAD RATING	SV	SN57B	42.000	--	1.552	65.191	1.4	0.278	2.26	30'	EL	14.482	0.629	1.62	30'	EL	1.448	0.80	0.278	1.55	30'	EL	14.482	
LEGAL LOAD RATING	TTST	TNAGRIT3	33.000	--	1.881	62.062	1.4	0.278	3.02	30'	EL	14.482	0.629	1.88	30'	EL	1.448	0.80	0.278	2.07	30'	EL	14.482	
LEGAL LOAD RATING	TTST	TNT4A	33.075	--	1.75	57.88	1.4	0.278	2.86	30'	EL	14.482	0.629	1.75	30'	EL	1.448	0.80	0.278	1.97	30'	EL	14.482	
LEGAL LOAD RATING	TTST	TNT6A	41.600	--	1.691	70.356	1.4	0.278	2.6	30'	EL	14.482	0.629	1.69	30'	EL	1.448	0.80	0.278	1.78	30'	EL	14.482	
LEGAL LOAD RATING	TTST	TNT7A	42.000	--	1.609	67.589	1.4	0.278	2.69	30'	EL	14.482	0.629	1.61	30'	EL	1.448	0.80	0.278	1.84	30'	EL	14.482	
LEGAL LOAD RATING	TTST	TNT7B	42.000	--	1.571	66.001	1.4	0.278	2.53	30	EL	14.482	0.629	1.57	30'	EL	1.448	0.80	0.278	1.74	30'	EL	14.482	
LEGAL LOAD RATING	TTST	TNAGRIT4	43.000	--	1.52	65.345	1.4	0.278	2.62	30'	EL	14.482	0.629	1.52	30'	EL	1.448	0.80	0.278	1.80	30'	EL	14.482	
LEGAL LOAD RATING	TTST	TNAGTS5A	45.000	--	1.63	73.366	1.4	0.278	2.55	30'	EL	14.482	0.629	1.63	30'	EL	1.448	0.80	0.278	1.75	30'	EL	14.482	
LEGAL LOAD RATING	TTST	TNAGTS6	45.000	3	1.431	64.38	1.4	0.278	2.45	30'	EL	11.586	0.629	1.43	30'	EL	1.448	0.80	0.278	1.69	30'	EL	11.586	

LOAD FACTORS:

DESIGN LOAD RATING FACTORS	LIMIT STATE	γ_{DC}	γ_{DW}
	STRENGTH I	1.25	1.50
	SERVICE III	1.00	1.00

NOTES:

MINIMUM RATING FACTORS ARE BASED ON THE STRENGTH I AND SERVICE III LIMIT STATES.

ALLOWABLE STRESSES FOR SERVICE III LIMIT STATE ARE AS REQUIRED FOR DESIGN.

COMMENTS:

1.
2.
3.
4.

(n) CONTROLLING LOAD RATING

(1) DESIGN LOAD RATING (HL-93)

(2) DESIGN LOAD RATING (HS-20)

(3) LEGAL LOAD RATING **

** SEE CHART FOR VEHICLE TYPE

GIRDER LOCATION

I - INTERIOR GIRDER
EL - EXTERIOR LEFT GIRDER
ER - EXTERIOR RIGHT GIRDER

LRFR SUMMARY

FOR SPAN A

PROJECT NO. BD-5114C

GRAHAM COUNTY

STATION: 11+41.00 -L-

SHEET 1 OF 7

STATE OF NORTH CAROLINA
DEPARTMENT OF TRANSPORTATION
RALEIGH

STANDARD
LRFR SUMMARY FOR
30' CORED SLAB UNIT
75° SKEW & 105° SKEW
(NON-INTERSTATE TRAFFIC)

NORTH CAROLINA PROFESSIONAL SEAL 15779 ENGINEER JOHN R. DUGGER, JR.
1/18/12

REVISIONS						SHEET NO.
NO.	BY:	DATE:	NO.	BY:	DATE:	3-4
1			3			TOTAL SHEETS
2			4			21

ASSEMBLED BY : A. SERSENGRAY DATE : 8/2011
CHECKED BY : J.R. DUGGER DATE : 8/2011
DRAWN BY : CVC 6/10
CHECKED BY : DMS 6/10

12-JAN-2012 12:11
mcdot\structures\bridge\structure\BD-5114C_50_LRFRsum
jaugustus

LOAD AND RESISTANCE FACTOR RATING (LRFD) SUMMARY FOR PRESTRESSED CONCRETE GIRDERS

LEVEL		VEHICLE	WEIGHT (TONS)	CONTROLLING LOAD RATING	MINIMUM RATING FACTORS (RF)	TONS = W X RF	STRENGTH I LIMIT STATE											SERVICE III LIMIT STATE						COMMENT NUMBER
								MOMENT					SHEAR						MOMENT					
							LIVELOAD FACTORS	DISTRIBUTION FACTORS (DF)	RATING FACTOR	SPAN	GIRDER LOCATION	DISTANCE FROM LEFT END OF SPAN (ft)	DISTRIBUTION FACTORS (DF)	RATING FACTOR	SPAN	GIRDER LOCATION	DISTANCE FROM LEFT END OF SPAN (ft)	LIVELOAD FACTORS	DISTRIBUTION FACTORS (DF)	RATING FACTOR	SPAN	GIRDER LOCATION	DISTANCE FROM LEFT END OF SPAN (ft)	
DESIGN LOAD RATING		HL-93(Inv)	N/A	1	1.098	--	1.75	0.272	1.36	45'	EL	21.982	0.617	1.46	45'	EL	35.172	0.80	0.272	1.10	45'	EL	21.982	
		HL-93(Opr)	N/A	--	1.764	--	1.35	0.272	1.76	45'	EL	21.982	0.617	1.89	45'	EL	35.172	N/A	--	--	-	--	--	
		HS-20(Inv)	36.000	2	1.347	48.507	1.75	0.272	1.67	45'	EL	21.982	0.617	1.68	45'	EL	8.793	0.80	0.272	1.35	45'	EL	21.982	
		HS-20(Opr)	36.000	--	2.165	77.938	1.35	0.272	2.16	45'	EL	21.982	0.617	2.17	45'	EL	8.793	N/A	--	--	--	--	--	
LEGAL LOAD RATING	SV	SNSH	13.500	--	2.632	35.536	1.4	0.272	4.08	45'	EL	21.982	0.617	4.43	45'	EL	35.172	0.80	0.272	2.63	45'	EL	21.982	
		SNGARBS2	20.000	--	2.126	42.513	1.4	0.272	3.29	45'	EL	21.982	0.617	3.32	45'	EL	35.172	0.80	0.272	2.19	45'	EL	21.982	
		SNAGRIS2	22.000	--	2.085	45.877	1.4	0.272	3.19	45'	EL	17.586	0.617	3.15	45'	EL	35.172	0.80	0.272	2.09	45'	EL	21.982	
		SNCOTTS3	27.250	--	1.314	35.814	1.4	0.272	2.04	45	EL	21.982	0.617	2.23	45'	EL	8.793	0.80	0.272	1.31	45'	EL	21.982	
		SNAGGRS4	34.925	--	1.16	40.51	1.4	0.272	1.8	45	EL	21.982	0.617	1.97	45'	EL	35.172	0.80	0.272	1.16	45'	EL	21.982	
		SNS5A	35.550	--	1.13	40.167	1.4	0.272	1.75	45'	EL	21.982	0.617	2.06	45'	EL	8.793	0.80	0.272	1.13	45'	EL	21.982	
		SNS6A	38.950	--	1.064	42.522	1.4	0.272	1.65	45'	EL	21.982	0.617	1.94	45'	EL	35.172	0.80	0.272	1.06	45'	EL	21.982	
		SNS7B	42.000	3	1.015	42.637	1.4	0.272	1.57	45	EL	21.982	0.617	1.88	45'	EL	35.172	0.80	0.272	1.01	45'	EL	21.982	
	TTST	TNAGRIT3	33.000	--	1.306	43.112	1.4	0.272	2.02	45'	EL	21.982	0.617	2.26	45'	EL	8.793	0.80	0.272	1.31	45'	EL	21.982	
		TNT4A	33.075	--	1.32	43.663	1.4	0.272	2.05	45'	EL	21.982	0.617	2.14	45'	EL	35.172	0.80	0.272	1.32	45'	EL	21.982	
		TNT6A	41.600	--	1.108	46.093	1.4	0.272	1.72	45'	EL	21.982	0.617	2.11	45'	EL	35.172	0.80	0.272	1.11	45'	EL	21.982	
		TNT7A	42.000	--	1.129	47.436	1.4	0.272	1.75	45'	EL	21.982	0.617	1.96	45'	EL	35.172	0.80	0.272	1.13	45'	EL	21.982	
		TNT7B	42.000	--	1.176	49.384	1.4	0.272	1.82	45	EL	21.982	0.617	1.88	45'	EL	35.172	0.80	0.272	1.18	45'	EL	21.982	
		TNAGRIT4	43.000	--	1.12	48.157	1.4	0.272	1.74	45	EL	21.982	0.617	1.8	45	EL	35.172	0.80	0.272	1.12	45'	EL	21.982	
		TNAGT5A	45.000	--	1.042	46.893	1.4	0.272	1.61	45'	EL	21.982	0.617	1.88	45'	EL	35.172	0.80	0.272	1.04	45'	EL	21.982	
		TNAGT5B	45.000	--	1.017	45.785	1.4	0.272	1.56	45'	EL	21.982	0.617	1.7	45'	EL	35.172	0.80	0.272	1.02	45'	EL	21.982	

LOAD FACTORS:

DESIGN LOAD RATING FACTORS	LIMIT STATE	γ_{cc}	γ_{cm}
	STRENGTH I	1.25	1.50
	SERVICE III	1.00	1.00

NOTES:

MINIMUM RATING FACTORS ARE BASED ON THE STRENGTH I AND SERVICE III LIMIT STATES.

ALLOWABLE STRESSES FOR SERVICE III LIMIT STATE ARE AS REQUIRED FOR DESIGN.

COMMENTS:

1.
2.
3.
4.

(3) CONTROLLING LOAD RATING

(1) DESIGN LOAD RATING (HL-93)

(2) DESIGN LOAD RATING (HS-20)

(3) LEGAL LOAD RATING **

** SEE CHART FOR VEHICLE TYPE

GIRDER LOCATION

I - INTERIOR GIRDER
EL - EXTERIOR LEFT GIRDER
ER - EXTERIOR RIGHT GIRDER

LRFR SUMMARY

FOR SPAN B

PROJECT NO. BD-5114C

GRAHAM COUNTY

STATION: 11+41.00 -L-

SHEET 2 OF 2

STATE OF NORTH CAROLINA
DEPARTMENT OF TRANSPORTATION
RALEIGH

STANDARD
LRFR SUMMARY FOR
45' CORED SLAB UNIT
75° SKEW & 105° SKEW
(NON-INTERSTATE TRAFFIC)

NORTH CAROLINA PROFESSIONAL SEAL 15779 ENGINEER JOHN R. DUGGINS JR.
1/12/12

REVISIONS						SHEET NO.
NO.	BY:	DATE:	NO.	BY:	DATE:	S-5
						TOTAL SHEETS 21

ASSEMBLED BY : A. SORSENGAN DATE : 8/20/2011
CHECKED BY : J.R. DUGGINS DATE : 10/2011
DRAWN BY : CVC 6/10
CHECKED BY : DNS 6/10

12-JAN-2012 17:11
R:\Structure\Bridge\Alternate Designs\BD-5114C_SD_LRFR.dgn
tlundgrn

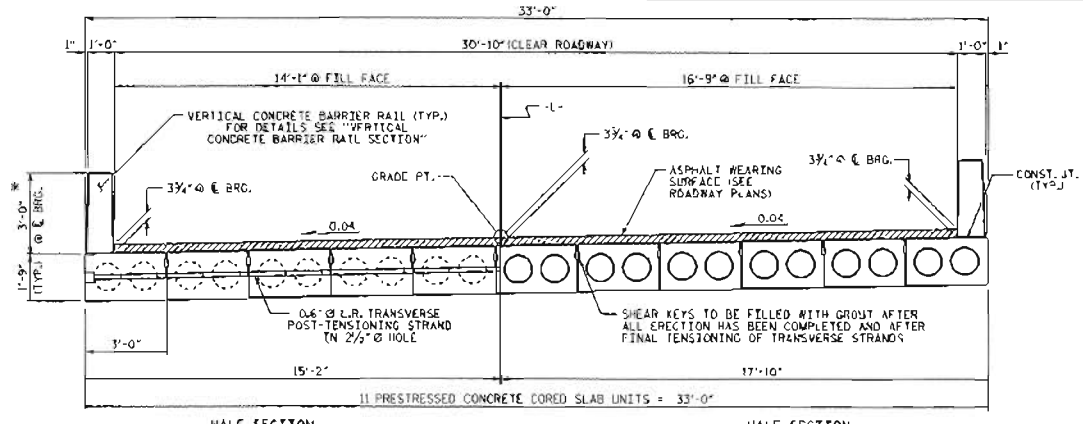

HALF SECTION AT INTERMEDIATE DIAPHRAGMS

HALF SECTION THROUGH VOIDS

TYPICAL SECTION

* - THE MAXIMUM BARRIER RAIL HEIGHT AND ASPHALT THICKNESS IS SHOWN. THE HEIGHT OF THE BARRIER RAIL AND ASPHALT THICKNESS VARIES WHILE THE TOP OF THE BARRIER RAIL FOLLOWS THE PROFILE OF THE GUTTERLINE. FOR RAIL HEIGHT DETAILS AND ASPHALT THICKNESS SEE THE "VERTICAL CONCRETE BARRIER RAIL SECTION" DETAIL.

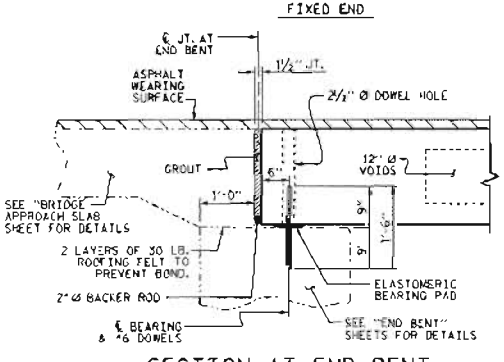

SECTION AT END BENT

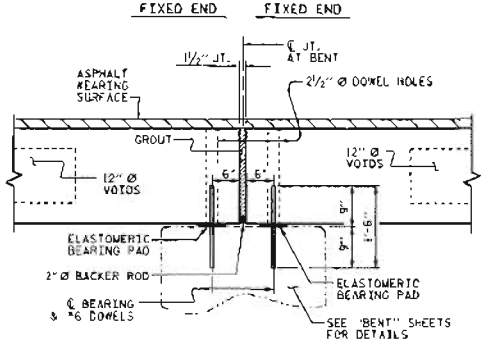

SECTION AT BENT

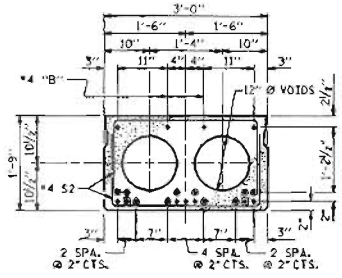

STRAND LAYOUT FOR 30' UNIT

(9 STRANDS REQUIRED)

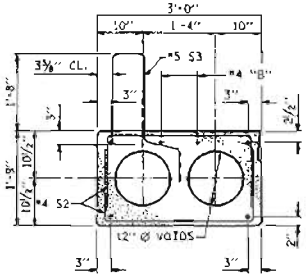

EXTERIOR SLAB SECTION

(FOR PRESTRESSED STRAND LAYOUT, SEE INTERIOR SLAB SECTION.)

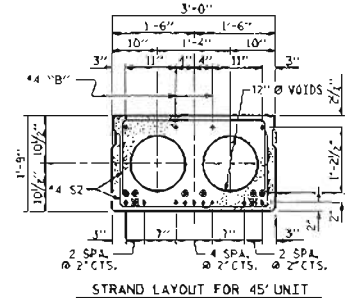

STRAND LAYOUT FOR 45' UNIT

(13 STRANDS REQUIRED)

INTERIOR SLAB SECTION
0.6" Ø LOW RELAXATION

△ BOND SHALL BE BROKEN ON THESE STRANDS FOR A DISTANCE OF 6'-0" FROM END OF CORED SLAB UNIT. SEE STANDARD SPECIFICATIONS, ARTICLE 1078-7.

◉ BOND SHALL BE BROKEN ON THESE STRANDS FOR A DISTANCE OF 2'-0" FROM END OF CORED SLAB UNIT. SEE STANDARD SPECIFICATIONS, ARTICLE 1078-7.

◉ OPTIONAL FULL LENGTH DEBONDED STRANDS. THESE STRANDS ARE NOT REQUIRED. IF THE FABRICATOR CHOOSES TO INCLUDE THESE STRANDS IN THE CORED SLAB UNIT, THE STRANDS SHALL BE DEBONDED FOR THE FULL LENGTH OF THE UNIT AT NO ADDITIONAL COST. SEE STANDARD SPECIFICATIONS, ARTICLE 1078-7.

DEBONDING LEGEND

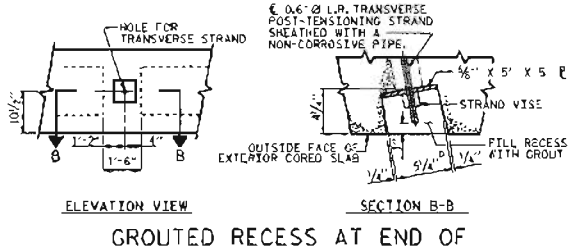

ELEVATION VIEW

SECTION B-B

GROUTED RECESS AT END OF POST-TENSIONED STRAND OF CORED SLABS

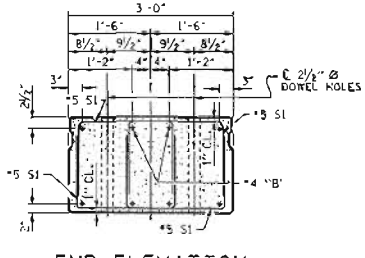

END ELEVATION

SHOWING PLACEMENT OF DOUBLE STIRRUPS AND LOCATION OF DOWEL HOLES. (STRAND LAYOUT NOT SHOWN.) INTERIOR SLAB UNIT SHOWN-EXTERIOR SLAB UNIT SIMILAR EXCEPT SHEAR KEY LOCATION.

SHEAR KEY DETAIL

NOTE: OMIT SHEAR KEY ON OUTSIDE FACE OF EXTERIOR CORED SLABS.

PROJECT NO. BD-5114C

GRAHAM COUNTY

STATION: 11+41.00 -L-

SHEET 1 OF 4

STATE OF NORTH CAROLINA
DEPARTMENT OF TRANSPORTATION
RALEIGH

STANDARD

3'-0" X 1'-9"
PRESTRESSED CONCRETE
CORED SLAB UNIT
75° SKEW

NORTH CAROLINA PROFESSIONAL SEAL 15779 ENGINEER
1/12/12

REVISIONS								SHEET NO.
NO.	BY:	DATE:	NO.	BY:	DATE:			S-6
1			3					TOTAL SHEETS
2			4					2-1

ASSEMBLED BY :	A. SORSENSON	DATE :	8/2011
CHECKED BY :	K. KU	DATE :	10/2011
DRAWN BY :	DOE	DATE :	3/09
CHECKED BY :	BCM	DATE :	3/09

13-JAN-2012 12:09
R:\Structures\Bridge\Contracts\BD-5114C_48_S*.dgn
jdudgeon

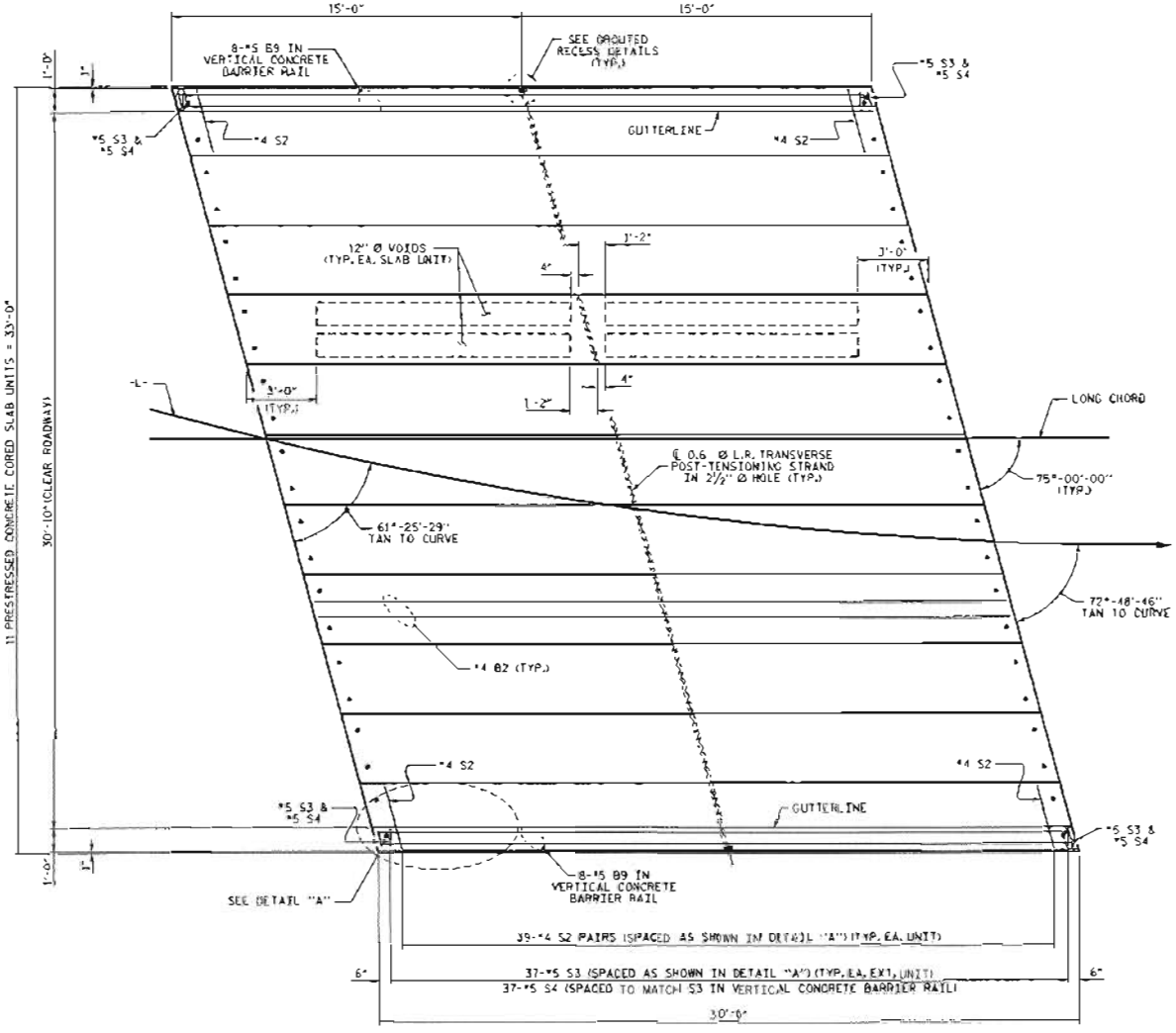

PLAN OF UNIT

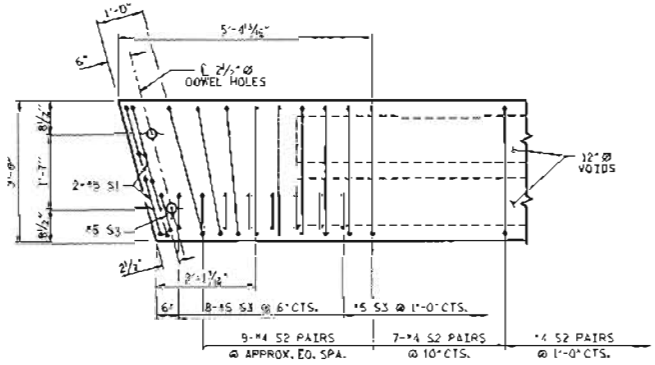

DETAIL "A"

NOTE: EXTERIOR UNIT SHOWN - INTERIOR UNIT SIMILAR EXCEPT OMIT #5 S3 BARS.

PROJECT NO. BD-5114C

GRAHAM COUNTY

STATION: 11+41.00 -L-

SHEET 2 OF 4

STATE OF NORTH CAROLINA
DEPARTMENT OF TRANSPORTATION
RALEIGH

PLAN OF 30' UNIT
30'-10" CLEAR ROADWAY
75° SKEW

SEAL 15719 PROFESSIONAL ENGINEER
1/12/12

ASSEMBLED BY : A. SORSENGINE	DATE : 8/2011		
CHECKED BY : H. KIN	DATE : 10/2011		
DRAWN BY : DGE 3/09			
CHECKED BY : BCH 3/09			

REVISIONS

NO.	BY:	DATE:	NO.	BY:	DATE:

SHEET NO. S-7

TOTAL SHEETS 21

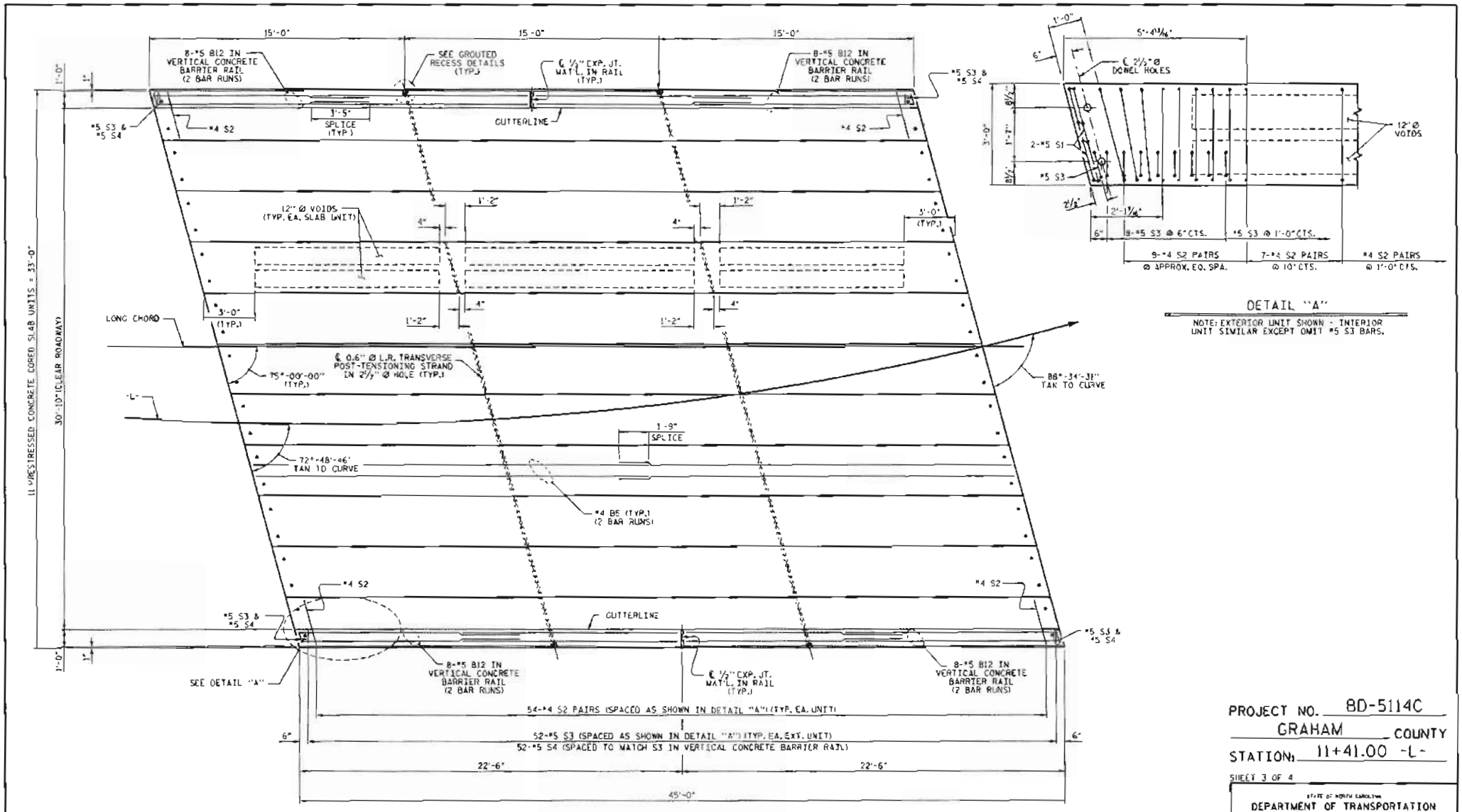

PLAN OF UNIT

DETAIL "A"

NOTE: EXTERIOR UNIT SHOWN - INTERIOR UNIT SIMILAR EXCEPT OMIT #5 S3 BARS.

PROJECT NO. BD-5114C

GRAHAM COUNTY

STATION: 11+41.00 -L-

SHEET 3 OF 4

STATE OF NORTH CAROLINA
DEPARTMENT OF TRANSPORTATION
RALEIGH

PLAN OF 45' UNIT
30'-10" CLEAR ROADWAY
75° SKEW

NORTH CAROLINA PROFESSIONAL SEAL 15799 ENGINEER JOHN R. DUCKER, JR.
1/12/12

ASSEMBLED BY :	A. SOPSENGINH	DATE : 6/2011			
CHECKED BY :	M. KIU	DATE : 10/2011			
DRAWN BY :	DOE 3/09				
CHECKED BY :	BDI 3/09				

REVISIONS						SHEET NO.
NO.	BY:	DATE:	NO.	BY:	DATE:	S-8
1			3			TOTAL SHEETS
2			4			21

GRADE 270 STRANDS	
	0.6" Ø L.R.
AREA (SQUARE INCHES)	0.217
ULTIMATE STRENGTH (LBS. PER STRAND)	59,600
APPLIED PRESTRESS (LBS. PER STRAND)	43,950

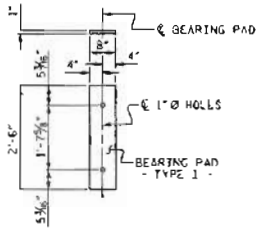

FIXED END
(TYPE 1 - 44 REQ'D)

ELASTOMERIC BEARING DETAILS

ELASTOMER IN ALL BEARINGS SHALL BE 50 DUROMETER HARDNESS.

BILL OF MATERIAL FOR ONE 30' CORED SLAB UNIT

BAR	NUMBER	SIZE	TYPE	EXTERIOR UNIT LENGTH	EXTERIOR UNIT WEIGHT	INTERIOR UNIT LENGTH	INTERIOR UNIT WEIGHT
B2	2	#4	STR	29'-7"	40	29'-7"	40
S1	8	#5	3	4'-3"	35	4'-3"	35
S2	78	#4	3	5'-4"	278	5'-4"	278
* S3	39	#5	1	6'-2"	251		
REINFORCING STEEL			LBS.		353		353
* EPOXY COATED REINFORCING STEEL			LBS.		251		
5000 P.S.I. CONCRETE			CU. YDS.		4.5		4.5
0.6" Ø L.R. STRANDS			No.		9		9

BILL OF MATERIAL FOR ONE 45' CORED SLAB UNIT

BAR	NUMBER	SIZE	TYPE	EXTERIOR UNIT LENGTH	EXTERIOR UNIT WEIGHT	INTERIOR UNIT LENGTH	INTERIOR UNIT WEIGHT
B5	4	#4	STR	23'-3"	62	23'-3"	62
S1	8	#5	3	4'-3"	35	4'-3"	35
S2	108	#4	3	5'-4"	385	5'-4"	385
* S3	54	#5	1	6'-2"	347		
REINFORCING STEEL			LBS.		482		482
* EPOXY COATED REINFORCING STEEL			LBS.		347		
6500 P.S.I. CONCRETE			CU. YDS.		6.6		6.6
0.6" Ø L.R. STRANDS			No.		13		13

BAR TYPES

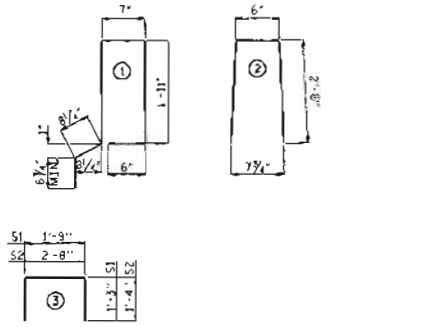

ALL BAR DIMENSIONS ARE OUT TO OUT

NOTES

ALL PRESTRESSING STRANDS SHALL BE 1"-WIDE LOW RELAXATION GRADE 270 STRANDS AND SHALL CONFORM TO AASHTO M203 EXCEPT FOR SAMPLING REQUIREMENTS WHICH SHALL BE IN ACCORDANCE WITH THE STANDARD SPECIFICATIONS.

ALL REINFORCING STEEL CAST WITH THE CORED SLAB SECTIONS SHALL BE GRADE 60 AND SHALL BE INCLUDED IN THE UNIT PRICE BID FOR PRESTRESSED CONCRETE CORED SLABS.

RECESSES FOR TRANSVERSE STRANDS SHALL BE GROUTED AFTER THE TENSIONING OF THE STRANDS.

THE 2 1/2" Ø DOWEL HOLES AT FIXED ENDS OF SLAB SECTIONS SHALL BE FILLED WITH NON-SHRINK GROUT.

THE 2" Ø BACKER ROD SHALL CONFORM TO THE REQUIREMENTS OF TYPE M BOND BREAKER, SEE SECTION 1028 OF THE STANDARD SPECIFICATIONS.

WHEN CORED SLABS ARE CAST, AN INTERNAL HOLD-DOWN SYSTEM SHALL BE EMPLOYED TO PREVENT VOIDS FROM RISING OR MOVING SIDEWAYS. AT LEAST SIX WEEKS PRIOR TO CASTING CORED SLABS, THE CONTRACTOR SHALL SUBMIT TO THE ENGINEER FOR REVIEW AND COMMENT, DETAILED DRAWINGS OF THE PROPOSED HOLD-DOWN SYSTEM. IN ADDITION TO STRUCTURAL DETAILS, LOCATION AND SPACING OF THE HOLD-DOWNS SHALL BE INDICATED.

ALL REINFORCING STEEL IN THE VERTICAL CONCRETE BARRIER RAIL SHALL BE EPOXY COATED.

PRESTRESSING STRANDS SHALL BE CUT FLUSH WITH THE CORED SLAB UNIT ENDS.

APPLY EPOXY PROTECTIVE COATING TO CORED SLAB UNIT ENDS.

GROOVED CONTRACTION JOINTS, 1/2" IN DEPTH, SHALL BE TOOLED IN ALL EXPOSED FACES OF THE BARRIER RAIL AND IN ACCORDANCE WITH ARTICLE 825-10(B) OF THE STANDARD SPECIFICATIONS. A CONTRACTION JOINT SHALL BE LOCATED AT EACH THIRD POINT BETWEEN BARRIER RAIL EXPANSION JOINTS. ONLY ONE CONTRACTION JOINT IS REQUIRED AT MIDPOINT OF BARRIER RAIL SEGMENTS LESS THAN 20 FEET IN LENGTH AND NO CONTRACTION JOINTS ARE REQUIRED FOR THOSE SEGMENTS LESS THAN 10 FEET IN LENGTH.

TRANSVERSE POST TENSIONING OF THE CORED SLAB UNITS SHALL BE DONE IN ACCORDANCE WITH THE STANDARD SPECIFICATIONS, EXCEPT THAT THE STRANDS SHALL BE 0.6" Ø AND TENSIONED TO 43,950 POUNDS.

THE TRANSFER OF LOAD FROM THE ANCHORAGES TO THE CORED SLAB UNIT SHALL BE DONE WHEN THE CONCRETE HAS REACHED A COMPRESSIVE STRENGTH OF NOT LESS THAN THE REQUIRED STRENGTH SHOWN IN THE "CONCRETE RELEASE STRENGTH" TABLE.

FOR GROUT FOR STRUCTURES, SEE SPECIAL PROVISIONS.

DEAD LOAD DEFLECTION AND CAMBER

	3'-0" x 1'-9"
30' CORED SLAB UNIT	0.6" Ø L.R. STRAND
CAMBER (SLAB ALONE IN PLACE)	1/2" ↑
DEFLECTION DUE TO SUPERIMPOSED DEAD LOAD**	1/8" ↓
FINAL CAMBER	3/8" ↑

** INCLUDES FUTURE WEARING SURFACE

DEAD LOAD DEFLECTION AND CAMBER

	3'-0" x 1'-9"
<5' CORED SLAB UNIT	0.6" Ø L.R. STRAND
CAMBER (SLAB ALONE IN PLACE)	1 1/4" ↑
DEFLECTION DUE TO SUPERIMPOSED DEAD LOAD**	7/8" ↓
FINAL CAMBER	1 7/8" ↑

** INCLUDES FUTURE WEARING SURFACE

CONCRETE RELEASE STRENGTH

UNIT	PSI
30' & 45' UNITS	4000

GUTTERLINE ASPHALT THICKNESS & RAIL HEIGHT

30'-10" CLEAR ROADWAY	ASPHALT OVERLAY THICKNESS @ MID-SPAN	RAIL HEIGHT @ MID-SPAN
	SUPERED SECTION	
30' UNITS	3 3/8"	2'-11 5/8"
45' UNITS	2 5/8"	2'-10 7/8"

CORED SLABS REQUIRED

	NUMBER	LENGTH	TOTAL LENGTH
30' UNIT			
EXTERIOR C.S.	2	30'-0"	60'-0"
INTERIOR C.S.	9	30'-0"	270'-0"
TOTAL	11		330'-0"
	NUMBER	LENGTH	TOTAL LENGTH
45' UNIT			
EXTERIOR C.S.	2	45'-0"	90'-0"
INTERIOR C.S.	9	45'-0"	405'-0"
TOTAL	11		495'-0"

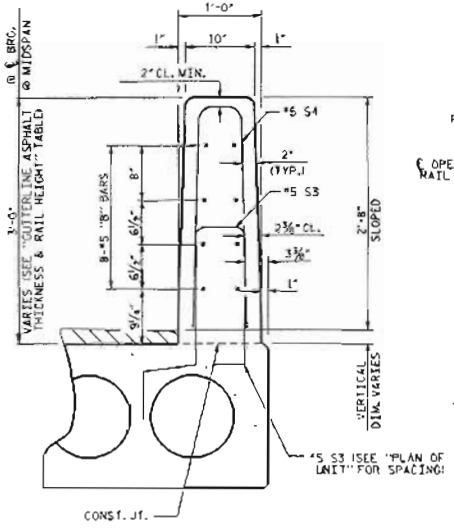

VERTICAL CONCRETE BARRIER RAIL SECTION

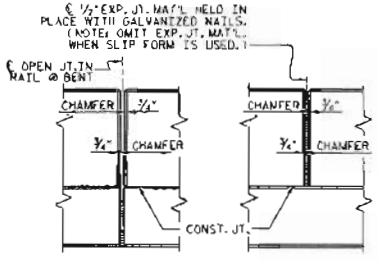

ELEVATION AT EXPANSION JOINTS

BILL OF MATERIAL FOR VERTICAL CONCRETE BARRIER RAIL

BAR	BARS PER PAIR OF EXTERIOR UNITS	TOTAL NO.	SIZE	TYPE	LENGTH	WEIGHT
	30' UNIT					
* B9	16	16	#5	STR	29'-6"	492
* S4	78	78	#5	2	5'-6"	447
* EPOXY COATED REINFORCING STEEL				LBS.		939
CLASS AA CONCRETE				CU.YDS.		6.2
TOTAL VERTICAL CONCRETE BARRIER RAIL				LN. FT.		60.25

BILL OF MATERIAL FOR VERTICAL CONCRETE BARRIER RAIL

BAR	BARS PER PAIR OF EXTERIOR UNITS	TOTAL NO.	SIZE	TYPE	LENGTH	WEIGHT
	45' UNIT					
* B12	64	64	#5	STR	12'-11"	862
* S4	108	108	#5	2	5'-6"	620
* EPOXY COATED REINFORCING STEEL				LBS.		1482
CLASS AA CONCRETE				CU.YDS.		9.3
TOTAL VERTICAL CONCRETE BARRIER RAIL				LN. FT.		90.25

NORTH CAROLINA PROFESSIONAL SEAL 15779 ENGINEER JOHN R. DUCENO, JR.
11/12/12

PROJECT NO. BD-5114C
GRAHAM COUNTY
STATION: 11+41.00 -L-

SHEET 4 OF 4

STATE OF NORTH CAROLINA
DEPARTMENT OF TRANSPORTATION
RALEIGH

STANDARD
3'-0" X 1'-9"
PRESTRESSED CONCRETE
CORED SLAB UNIT
75° SKEW

REVISIONS							
NO.	BY:	DATE:	NO.	BY:	DATE:	SHEET NO. S-9	
1			3			TOTAL SHEETS 21	
2			4				

ASSEMBLED BY :	A. SORSENG NH	DATE :	8/201
CHECKED BY :	H. KAP	DATE :	10/201
DRAWN BY :	OGE	5/09	
CHECKED BY :	FCH	6/09	

12-JAN-2012 12:21
R:\Structure Standards\Roadway\Standards\BD-5114_S9_3'-0.dgn
fdoughtd

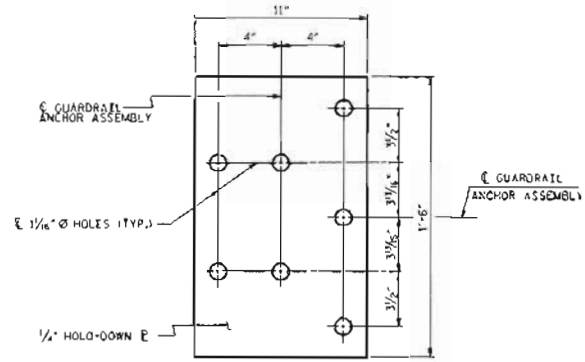

PLAN

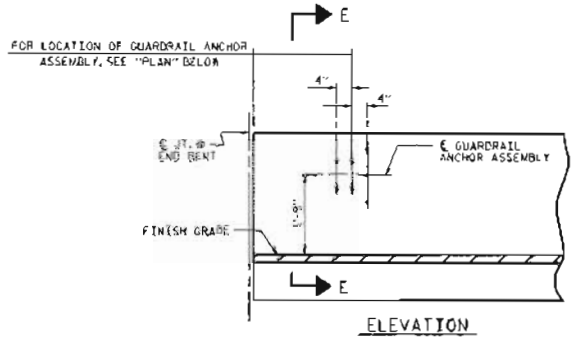

ELEVATION

NOTES

THE GUARDRAIL ANCHOR ASSEMBLY SHALL CONSIST OF A 1/4" HOLD DOWN PLATE AND 7 - 7/8" Ø BOLTS WITH NUTS AND WASHERS.

THE HOLD-DOWN PLATE SHALL CONFORM TO AASHTO M270 GRADE 36. AFTER FABRICATION, THE HOLD-DOWN PLATE SHALL BE HOT-DIP GALVANIZED IN ACCORDANCE WITH AASHTO M111.

BOLTS SHALL CONFORM TO THE REQUIREMENTS OF ASTM A307 AND NUTS SHALL CONFORM TO THE REQUIREMENTS OF AASHTO M291. BOLTS, NUTS AND WASHERS SHALL BE GALVANIZED. (AT THE CONTRACTOR'S OPTION, STAINLESS STEEL BOLTS, NUTS AND WASHERS MAY BE USED AS AN ALTERNATE FOR THE 7/8" Ø GALVANIZED BOLTS, NUTS AND WASHERS. THEY SHALL CONFORM TO OR EXCEED THE MECHANICAL REQUIREMENTS OF ASTM A307. THE USE OF THIS ALTERNATE SHALL BE APPROVED BY THE ENGINEER.)

THE GUARDRAIL ANCHOR ASSEMBLY IS REQUIRED AT ALL POINTS WHERE APPROACH GUARDRAIL IS TO BE ATTACHED TO THE END OF BARRIER RAIL. FOR POINTS OF ATTACHMENT, SEE SKETCH.

AFTER INSTALLATION, THE EXPOSED THREAD OF THE BOLT SHALL BE BURRED WITH A SHARP POINTED TOOL.

THE COST OF THE GUARDRAIL ANCHOR ASSEMBLY SHALL BE INCLUDED IN THE UNIT CONTRACT PRICE B10 FOR VERTICAL CONCRETE BARRIER RAIL.

THE VERTICAL REINFORCING BARS MAY BE SHIFTED SLIGHTLY IN THE VERTICAL CONCRETE BARRIER RAIL TO CLEAR ASSEMBLY BOLTS.

THE 1 1/4" Ø HOLES SHALL BE FORMED OR DRILLED WITH A CORE BIT. IMPACT TOOLS WILL NOT BE PERMITTED. ANY CONCRETE DAMAGED BY THIS WORK SHALL BE REPAIRED TO THE SATISFACTION OF THE ENGINEER.

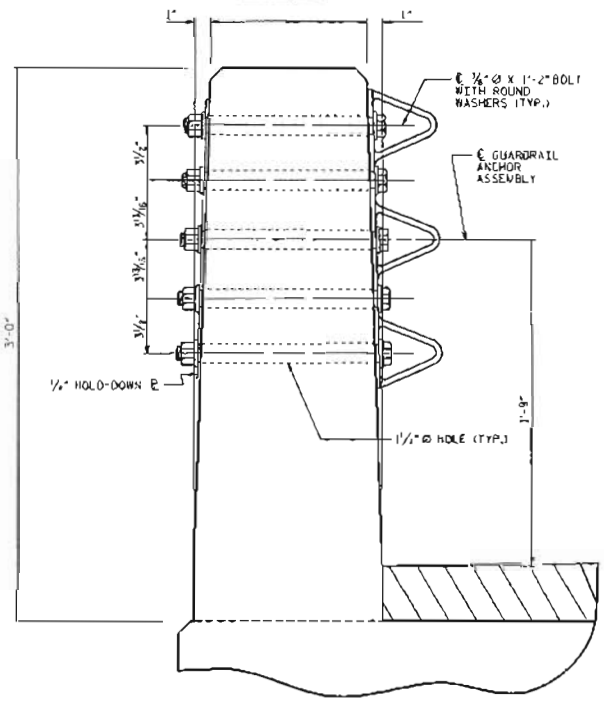

SECTION E-E

GUARDRAIL ANCHOR ASSEMBLY DETAILS

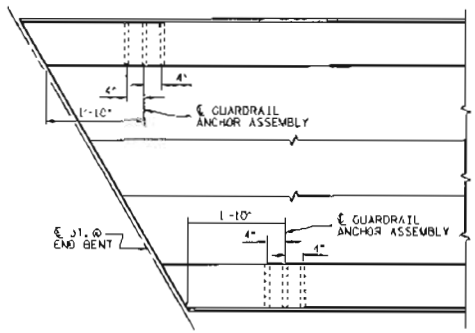

PLAN

LOCATION OF ANCHORS FOR GUARDRAIL

END BENT #1 SHOWN. END BENT #2 SIMILAR

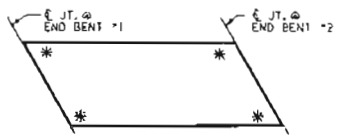

SKETCH SHOWING POINTS OF ATTACHMENT

✱ DENOTES GUARDRAIL ANCHOR ASSEMBLY

PROJECT NO. BD-5114C

GRAHAM COUNTY

STATION: 11+41.00 -L-

STATE OF NORTH CAROLINA
DEPARTMENT OF TRANSPORTATION

STANDARD
GUARDRAIL ANCHORAGE FOR VERTICAL CONCRETE BARRIER RAIL

NORTH CAROLINA PROFESSIONAL SEAL 15719 ENGINEER JOHN R. DUGGINS

1/12/12

ASSEMBLED BY :	A. SORSENSON DATE : 8/2011
CHECKED BY :	J.R. DUGGINS DATE : 10/2011
DRAWN BY :	MAK 5/10
CHECKED BY :	CW 5/10
	ADDED 3/8/10

REVISIONS								SHEET NO.
NO.	BY:	DATE:	NO.	BY:	DATE:			5-10
1			3					TOTAL SHEETS
2			4					21

LS-MR-2013 11:43
R:\Structures\Workstation\BD-5114C SG_01_GR.dgn
jduggins

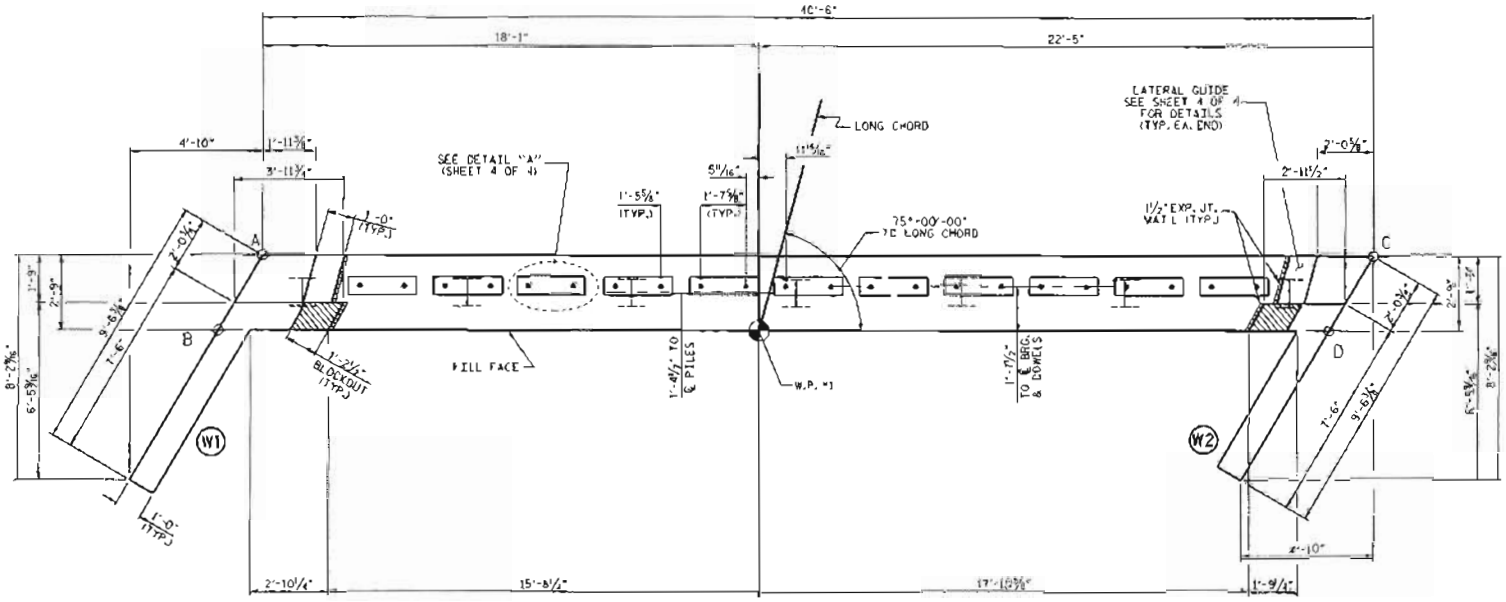

PLAN

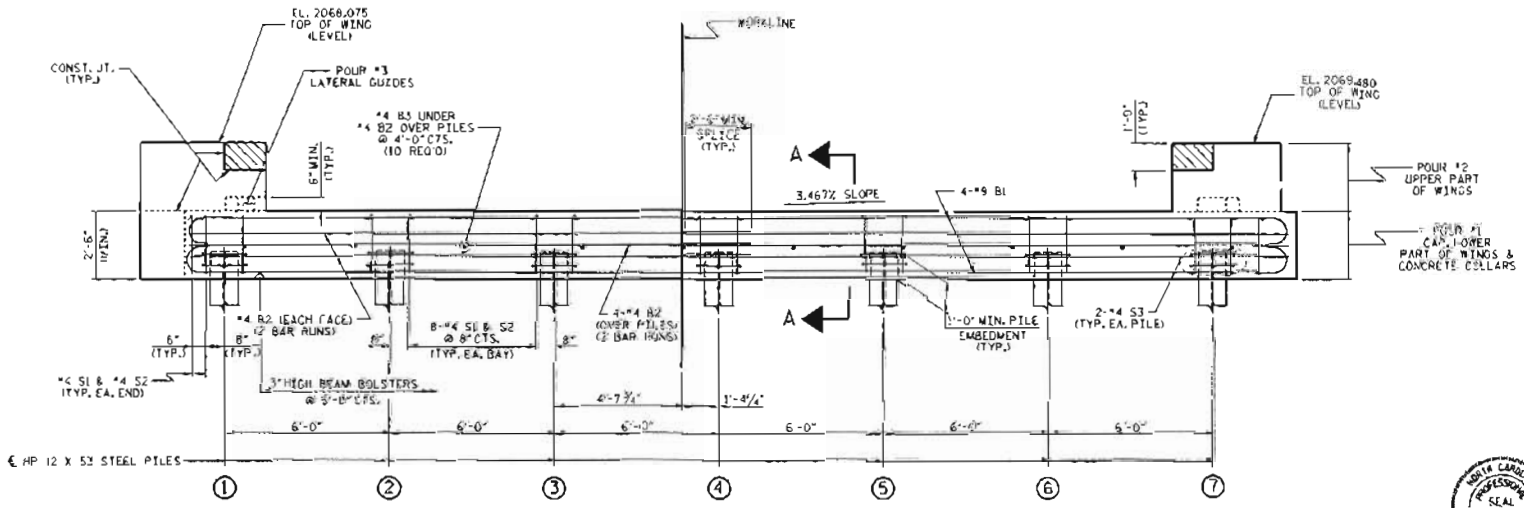

ELEVATION

WINGS NOT SHOWN FOR CLARITY.
FOR SECTION A-A, SEE SHEET 4 OF 4.
CONCRETE COLLARS FOR STEEL PILES NOT SHOWN IN PLAN AND ELEVATION VIEWS FOR CLARITY.
SEE "CORROSION PROTECTION FOR STEEL PILES DETAIL", SHEET 4 OF 4.

NOTES

STIRRUPS IN CAP MAY BE SHIFTED AS NECESSARY TO CLEAR DOWELS.

THE LATERAL GUIDES ARE NOT TO BE POURED UNTIL AFTER THE CORED SLAB UNITS ARE IN PLACE.

THE CONCRETE IN THE SHADED AREA OF THE WING SHALL BE POURED AFTER THE VERTICAL CONCRETE BARRIER RAIL IS CAST IF SLIP FORMING IS USED.

FOR PILE SPLICE DETAILS, SEE SHEET 4 OF 4.

FOR WING DETAILS, SEE SHEET 3 OF 4.

THE CONTRACTOR HAS THE OPTION TO OMIT THE LATERAL GUIDE IF APPROVED BY THE ENGINEER.

ELEVATIONS OF NOTED POINTS		
	TOP OF CAP	BOTTOM OF CAP
POINT A	2065.631	2063.131
POINT B	2065.575	2063.075
POINT C	2067.035	2064.535
POINT D	2066.980	2064.480

TOP OF PILE ELEVATIONS	
1	2064.198
2	2064.406
3	2064.614
4	2064.822
5	2065.030
6	2065.238
7	2065.446

PROJECT NO. BD-5114C
GRAHAM COUNTY
STATION: 11+41.00 -L-

SHEET 1 OF 3

STATE OF NORTH CAROLINA
DEPARTMENT OF TRANSPORTATION
RALEIGH

SUBSTRUCTURE
END BENT No. 1

NORTH CAROLINA PROFESSIONAL SEAL 15779 ENGINEER JOHN P. DUGGINS, JR.
11/12/12

ASSEMBLED BY :	A. SORSENSON	DATE :	8/2011
CHECKED BY :	H. KIM	DATE :	10/2011
DRAWN BY :	DCC	03/10	
CHECKED BY :	MKT	03/10	

REVISIONS								SHEET NO.
NO.	BY:	DATE:	NO.	BY:	DATE:			S-11
1			3					TOTAL SHEETS
2			4					21

12-JAN-2012 11:24
R:\STructures\Production\BD-5114C_SD_1.dgn
jduggins

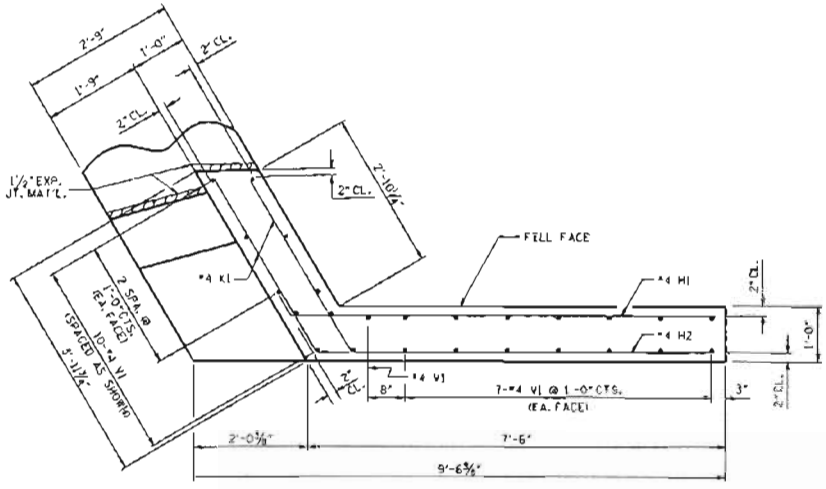

PLAN OF WING (W1)

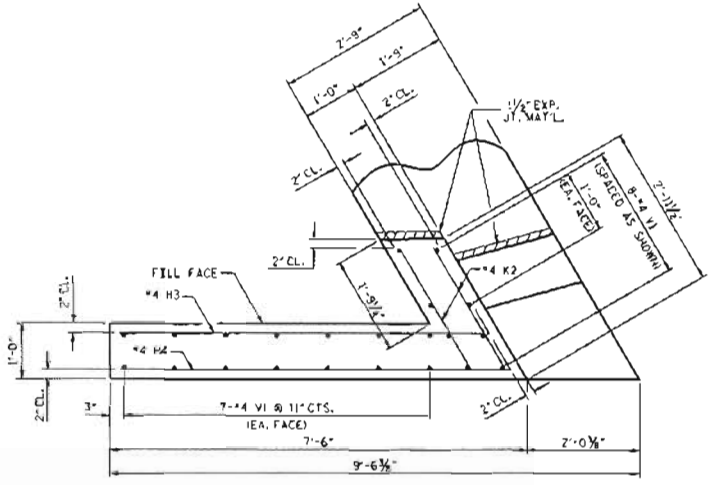

PLAN OF WING (W2)

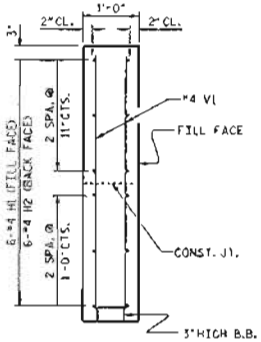

SECTION X-X

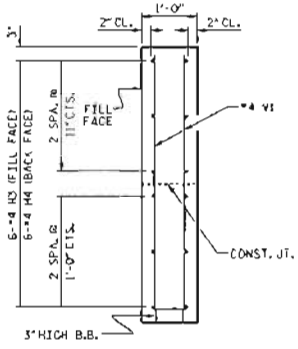

SECTION Y-Y

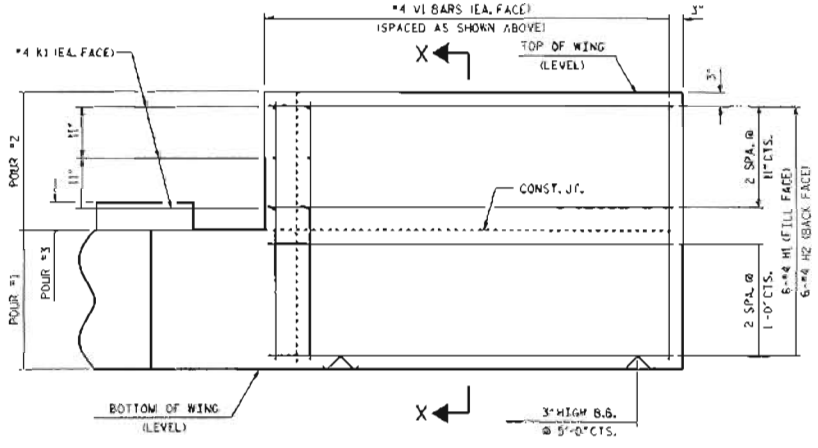

ELEVATION OF WING (W1)

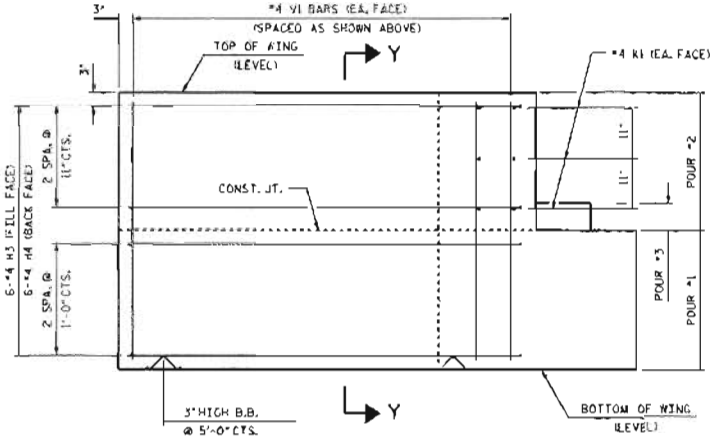

ELEVATION OF WING (W2)

WING DETAILS

PROJECT NO. BD-5114C

GRAHAM COUNTY

STATION: 11+41.00 -L-

SHEET 2 OF 3

STATE OF NORTH CAROLINA
DEPARTMENT OF TRANSPORTATION
RALEIGH

SUBSTRUCTURE
END BENT NO. 1
WING DETAILS

ASSEMBLED BY : A. SORSENSEN	DATE : 8/2011
CHECKED BY : H. KIM	DATE : 10/2011
DRAWN BY : DOE	DATE : 03/10
CHECKED BY : MCT	DATE : 03/10

REVISIONS									SHEET NO.
NO.	BY:	DATE:	NO.	BY:	DATE:				S-12
1			3						TOTAL SHEETS
2			4						24

NORTH CAROLINA PROFESSIONAL SEAL 15779 ENGINEER JOHN R. OLCORS, JR.

1/12/12

12-JAN-2012 11:33
R:\Structure Design\Roadway\Bridges\BD-5114C\S0_1_*.dgn
bdaughtry

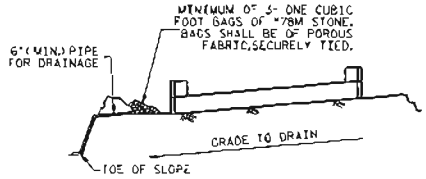

BAGGED STONE AND PIPE SHALL BE PLACED IMMEDIATELY AFTER COMPLETION OF END BENT EXCAVATION. PIPE MAY BE EITHER CONCRETE, CORRUGATED STEEL, CORRUGATED ALUMINUM ALLOY, OR CORRUGATED PLASTIC. PERFORATED PIPE WILL NOT BE ALLOWED.

BAGGED STONE SHALL REMAIN IN PLACE UNTIL THE ENGINEER DIRECTS THAT IT BE REMOVED. THE CONTRACTOR SHALL REMOVE AND DISPOSE OF SILT ACCUMULATIONS AT BAGGED STONE WHEN SO DIRECTED BY THE ENGINEER. BAGS SHALL BE REMOVED AND REPLACED WHENEVER THE ENGINEER DETERMINES THAT THEY HAVE DETERIORATED AND LOST THEIR EFFECTIVENESS.

NO SEPARATE PAYMENT WILL BE MADE FOR THIS WORK AND THE ENTIRE COST OF THIS WORK SHALL BE INCLUDED IN THE UNIT CONTRACT PRICE BID FOR THE SEVERAL PAY ITEMS.

TEMPORARY DRAINAGE AT END BENT

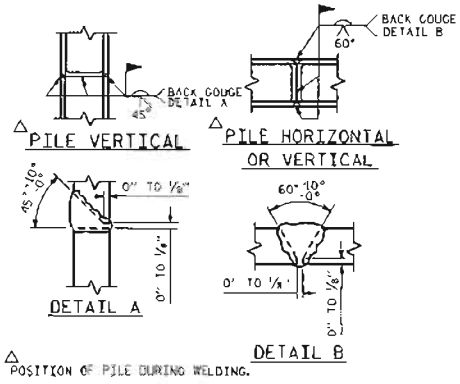

PILE SPLICE DETAILS

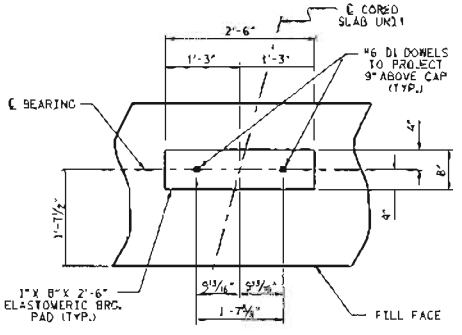

DETAIL "A"

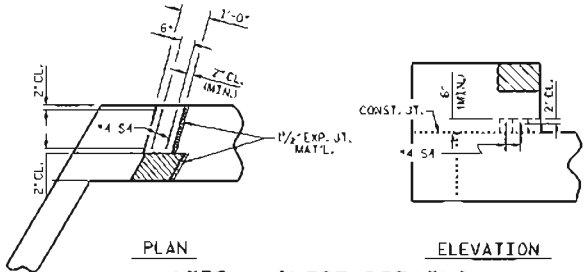

LATERAL GUIDE DETAILS

(END BENT No. 1. LEFT LATERAL GUIDE SHOWN, RIGHT END SIMILAR)

BAR TYPES

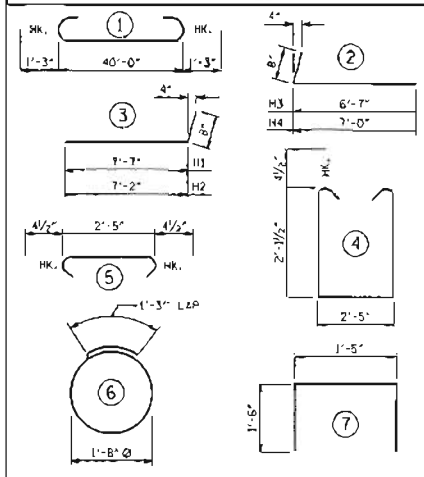

ALL BAR DIMENSIONS ARE OUT TO OUT.

END BENT No. 1
HP 12 X 53 STEEL PILES
NO: 7 LIN. FT.= 140

BILL OF MATERIAL

END BENT NO. 1

BAR	NO.	SIZE	TYPE	LENGTH	WEIGHT
B1	8	#9	1	42'-6"	1156
B2	16	#4	STR	21'-4"	228
B3	10	#4	STR	2'-5"	16
D1	22	#6	STR	1'-6"	50
H1	6	#4	3	8'-3"	33
H2	6	#4	3	7'-10"	31
H3	6	#4	2	7'-3"	29
H4	6	#4	2	7'-8"	31
K1	6	#4	STR	3'-7"	14
K2	6	#4	STR	2'-6"	10
S1	52	#4	4	7'-5"	258
S2	52	#4	5	3'-2"	110
S3	12	#4	6	6'-6"	61
S4	4	#4	7	4'-5"	12
V1	47	#4	STR	4'-8"	147
REINFORCING STEEL (FOR ONE END BENT)					2186 LBS.

CLASS A CONCRETE BREAKDOWN (FOR ONE END BENT)

POUR #1	CAP, LOWER PART OF WINGS & COLLARS	12.7 C.Y.
POUR #2	UPPER PART OF WINGS	1.8 C.Y.
POUR #3	LATERAL GUIDES	0.1 C.Y.
TOTAL CLASS A CONCRETE		14.6 C.Y.

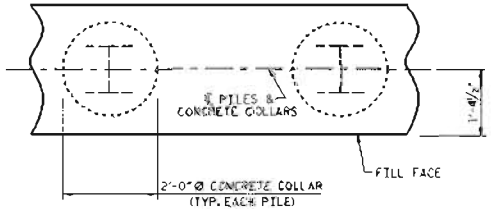

PLAN

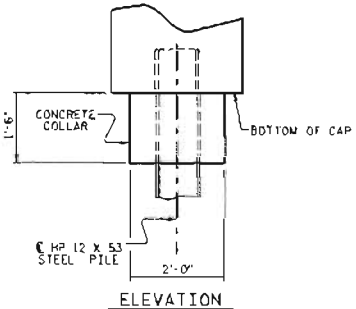

ELEVATION

CORROSION PROTECTION FOR STEEL PILES DETAIL

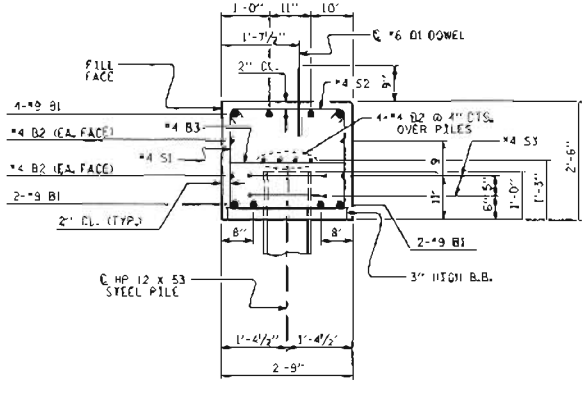

SECTION A-A

(CONCRETE COLLAR NOT SHOWN FOR CLARITY. SEE "CORROSION PROTECTION FOR STEEL PILES DETAIL.")

NORTH CAROLINA PROFESSIONAL SEAL 15779 ENGINEER JOHN R. DUERSCHER, JR.

1/12/12

PROJECT NO. BD-5114C
GRAHAM COUNTY
STATION: 11+41.00 -L-

SHEET 3 OF 3

STATE OF NORTH CAROLINA
DEPARTMENT OF TRANSPORTATION
RALEIGH

SUBSTRUCTURE
END BENT No. 1
DETAILS

REVISIONS								SHEET NO. S-13
NO.	BY:	DATE:	NO.	BY:	DATE:			TOTAL SHEETS 21
1			3					
2			4					

ASSEMBLED BY :	A. SORSENSEN	DATE :	8/2011
CHECKED BY :	N. KIM	DATE :	10/2011
DRAWN BY :	DGE 03/10		
CHECKED BY :	WKT 03/10		

12-JAN-2012 11:37
R:\Structures\Roadway\Foundations\BD-5114C_SD_E*.dgn
(Gaspard)

NOTES

STIRRUPS IN CAP MAY BE SHIFTED AS NECESSARY TO CLEAR DOWELS.

HOOKS ON "V" BARS MAY BE TURNED AS NECESSARY FOR PLACING REINFORCING STEEL.

FOR DRILLED PIERS, SEE SECTION 411 OF THE STANDARD SPECIFICATIONS.

ALL STEEL IN THE DRILLED PIERS IS INCLUDED IN THE PAY ITEMS FOR "REINFORCING STEEL" AND "SPIRAL COLUMN REINFORCING STEEL."

THE LATERAL GUIDES ARE NOT TO BE POURED UNTIL AFTER THE CORED SLAB UNITS ARE IN PLACE.

★ INVERT ALTERNATE STIRRUPS.

THE LOCATION OF THE CONSTRUCTION JOINT IN THE DRILLED PIERS IS BASED ON AN APPROXIMATE GROUND LINE ELEVATION. IF THE CONSTRUCTION JOINT IS ABOVE THE ACTUAL GROUND LINE ELEVATION, THE CONTRACTOR SHALL PLACE THE CONSTRUCTION JOINT ONE FOOT BELOW THE GROUND LINE.

DRILLED PIERS SHALL BE TERMINATED ONE FOOT ± ABOVE NORMAL WATER SURFACE ELEVATION FOR SHAFTS LOCATED IN WATER.

THE CONTRACTOR HAS THE OPTION TO OMIT THE LATERAL GUIDE IF APPROVED BY THE ENGINEER.

THE CONTRACTOR'S ATTENTION IS CALLED TO THE FACT THAT THE LONGITUDINAL REINFORCEMENT FOR THE DRILLED PIERS IS DETAILED WITH 3 FEET OF EXTRA LENGTH.

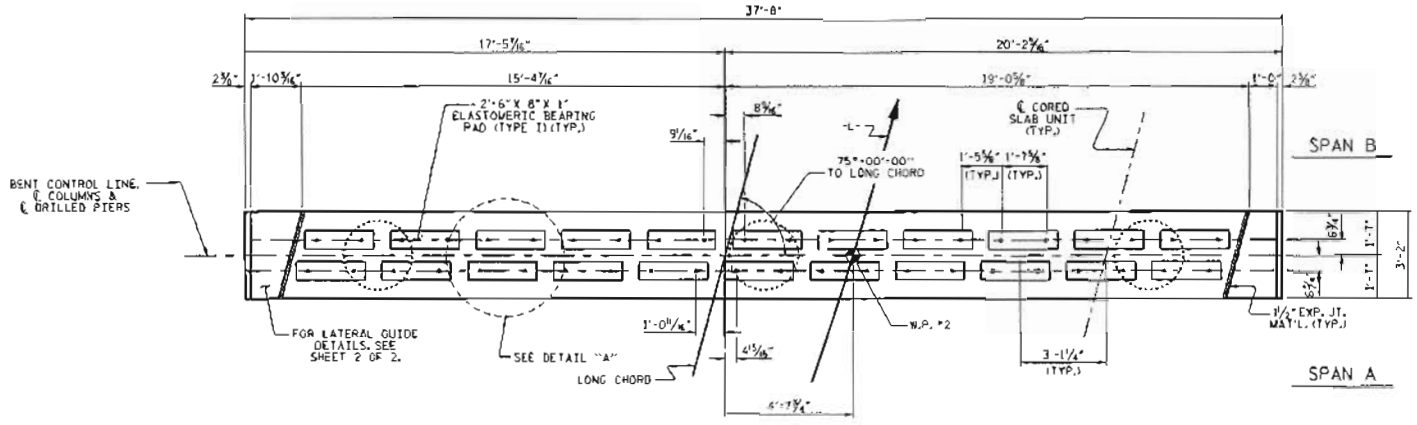

PLAN

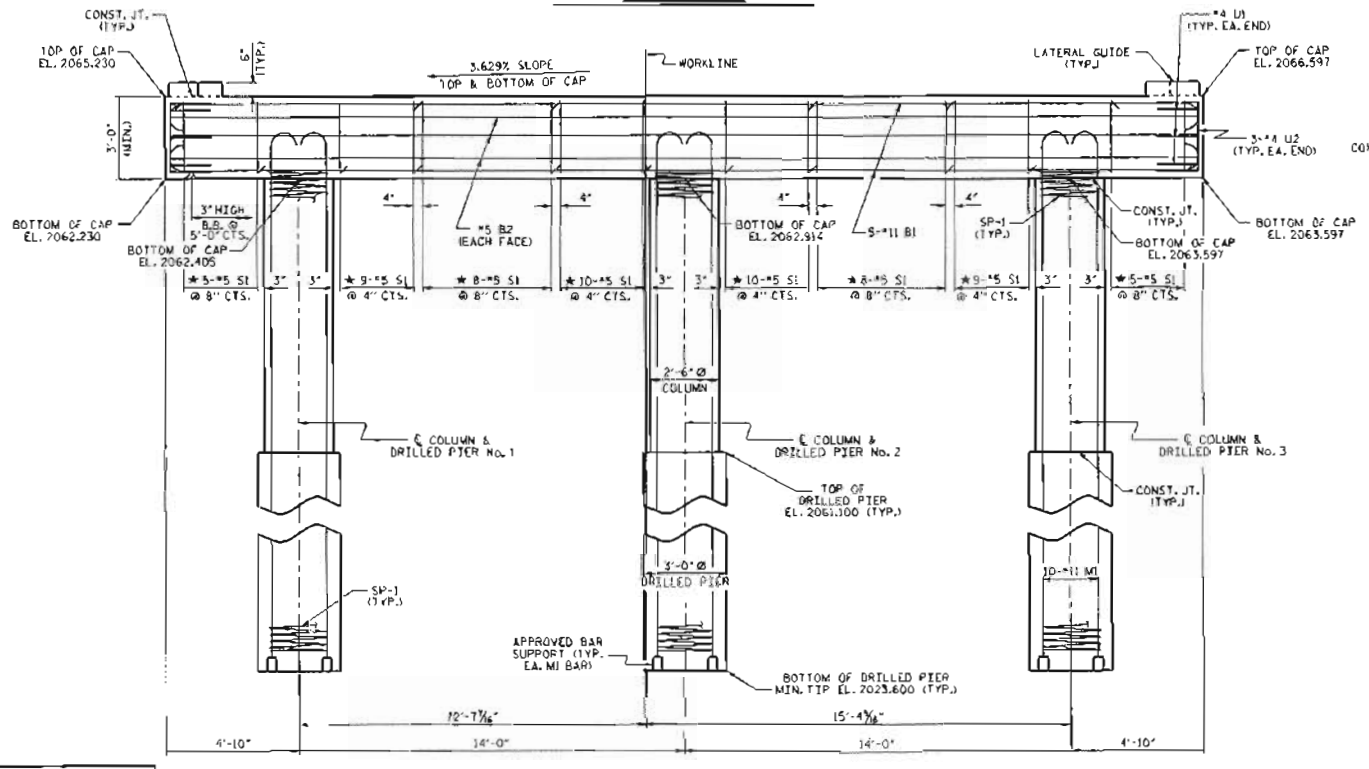

ELEVATION

DIMENSIONS & REINFORCING STEEL ARE TYPICAL FOR EACH COLUMN & DRILLED PIER UNLESS OTHERWISE NOTED.

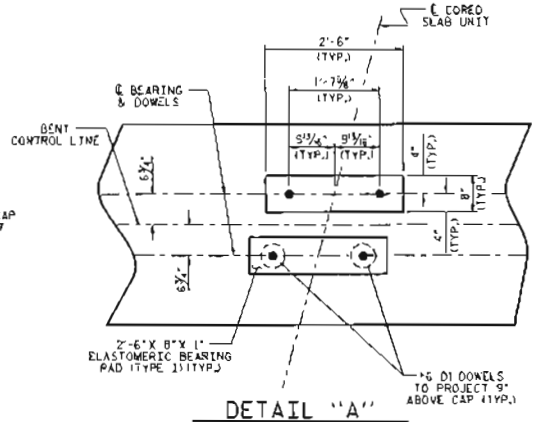

DETAIL "A"

(DIMENSIONS ARE TYPICAL EACH BEARING)

PROJECT NO. BD-5114C

GRAHAM COUNTY

STATION: 11+41.00 -L-

SHEET 1 OF 2

STATE OF NORTH CAROLINA
DEPARTMENT OF TRANSPORTATION
RALEIGH

SUBSTRUCTURE

BENT No. 1

NORTH CAROLINA PROFESSIONAL SEAL 15779 ENGINEER JOHN R. DICKENS, JR.

1/12/12

REVISIONS							
NO.	BY:	DATE:	NO.	BY:	DATE:		
1			3				
2			4				

SHEET NO. S-14

TOTAL SHEETS 21

ASSEMBLED BY :	L. SORSENGNH	DATE :	8/2011
CHECKED BY :	L. KAK	DATE :	10/2011
DRAWN BY :	DGE	DATE :	04/10
CHECKED BY :	MKT	DATE :	04/10

17-JAN-2012 11:40

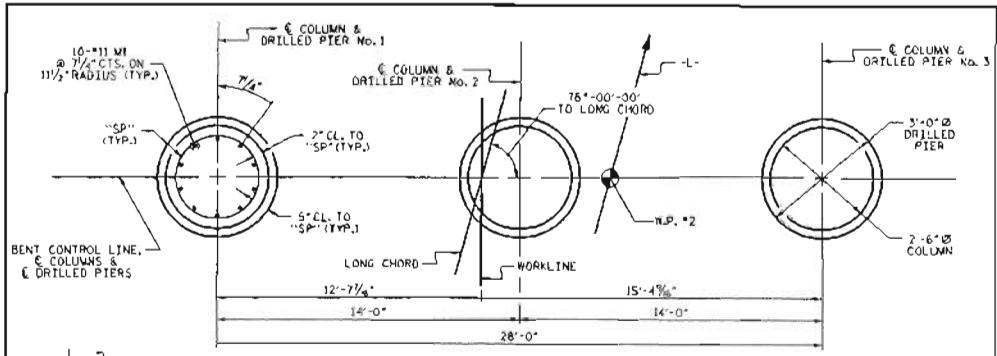

PLAN OF DRILLED PIERS & COLUMNS

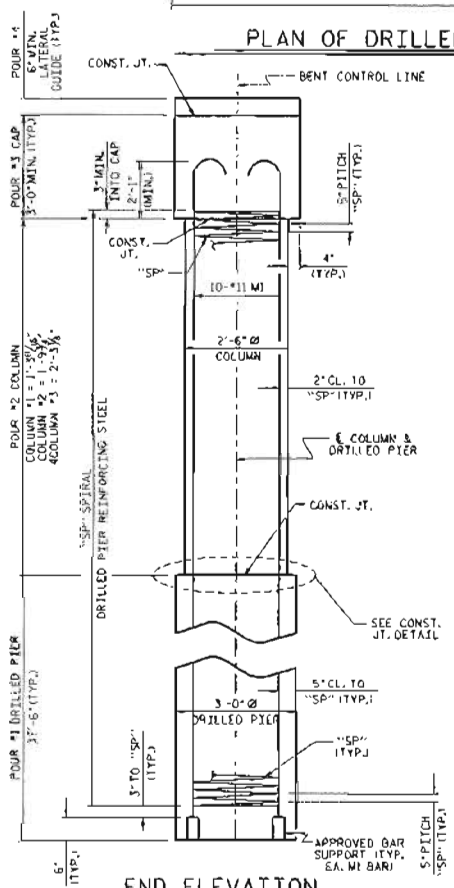

END ELEVATION

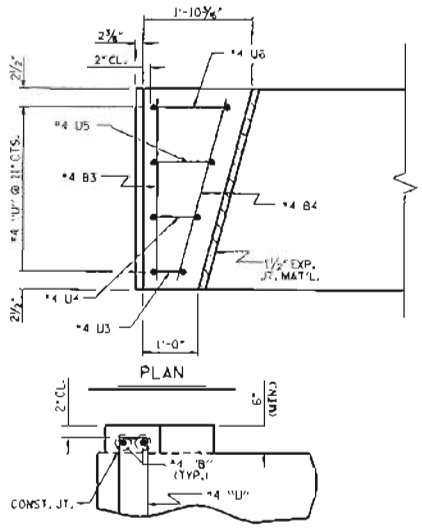

LATERAL GUIDE DETAILS

(LEFT LATERAL GUIDE SHOWN, RIGHT SIDE SIMILAR)

BAR TYPES

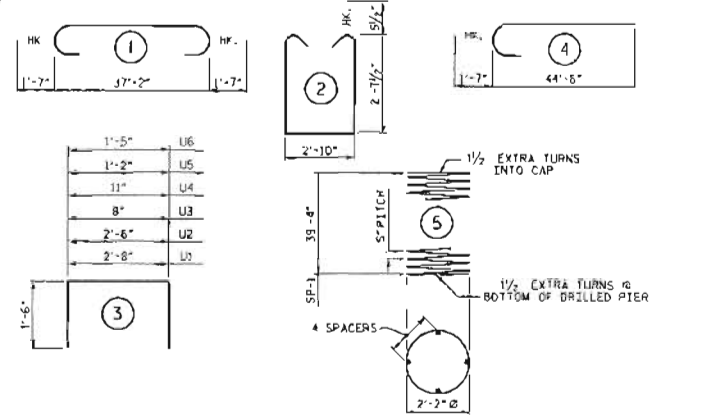

ALL BAR DIMENSIONS ARE OUT TO OUT

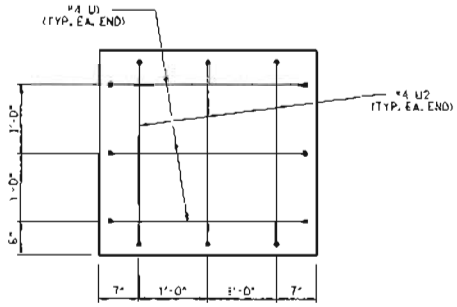

END OF CAP VIEW

(TYPICAL BOTH ENDS)

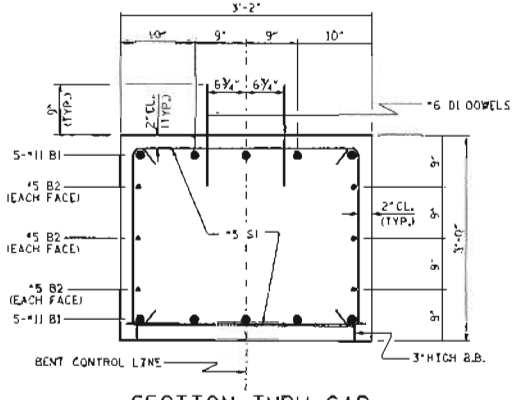

SECTION THRU CAP

BILL OF MATERIAL

BAR	NO.	SIZE	TYPE	LENGTH	WEIGHT
B1	10	#11	1	40'-4"	2143
B2	6	#5	STR	37'-4"	234
B3	2	#4	STR	2'-10"	4
B4	2	#4	STR	2'-11"	4
M1	30	#11	4	46'-1"	7345
D1	44	#6	STR	1'-6"	99
S1	64	#5	2	9'-0"	601
U1	6	#4	3	5'-8"	23
U2	6	#4	3	5'-6"	22
U3	2	#4	3	3'-8"	5
U4	2	#4	3	3'-11"	5
U5	2	#4	3	4'-2"	6
U6	2	#4	3	4'-5"	6
REINFORCING STEEL					10,497 LBS.
SP-1	1	*	5	652'-4"	2041
SPIRAL COLUMN REINFORCING STEEL					2041 LBS.

* THE "SP" SPIRAL REINFORCING STEEL SHALL BE #31 OR D-31 COLD DRAWN WIRE OR #5 PLAIN OR DEFORMED BAR

CLASS A CONCRETE BREAKDOWN	
POUR #2 (COLUMNS)	1.0 C.Y.
POUR #3 (CAP)	13.3 C.Y.
POUR #4 (LATERAL GUIDE)	0.2 C.Y.
TOTAL CLASS A CONCRETE	14.5 C.Y.

DRILLED PIERS:

DRILLED PIER CONCRETE
POUR #1 (DRILLED PIERS) 29.5 C.Y.

3'-0" Ø DRILLED PIER NOT IN SOIL
45.00 LIN. FT.

3'-0" Ø DRILLED PIER IN SOIL
67.5 LIN. FT.

PERMANENT STEEL CASING FOR 3'-0" Ø DRILLED PIER 36.30 LIN. FT.

CSL TUBES 168 LIN. FT.

PROJECT NO. BD-5114C
GRAHAM COUNTY
STATION: 11+41.00 -L-

SHEET 2 OF 2

STATE OF NORTH CAROLINA
DEPARTMENT OF TRANSPORTATION
RALEIGH

SUBSTRUCTURE
BENT No. 1

ASSEMBLED BY : A. SORSENGIAN	DATE : 8/2001				
CHECKED BY : H. KIM	DATE : 10/2001				
DRAWN BY : DGE	03/10				
CHECKED BY : MRT	03/10				

REVISIONS

NO.	BY:	DATE:	NO.	BY:	DATE:
1			3		
2			4		

SHEET NO. S-15
TOTAL SHEETS 21

NORTH CAROLINA PROFESSIONAL SEAL 15719 ENGINEER JOHN R. DUGGINS, JR.

11/12/12

12-JUN-2012 11:10
R:\STructures\Work Location\BD-5114C_SD_S*.dgn
jduggins

NOTES

STIRRUPS IN CAP MAY BE SHIFTED AS NECESSARY TO CLEAR DOWELS.

THE LATERAL GUIDES ARE NOT TO BE POURED UNTIL AFTER THE CORED SLAB UNITS ARE IN PLACE.

THE CONCRETE IN THE SHADED AREA OF THE WING SHALL BE POURED AFTER THE VERTICAL CONCRETE BARRIER RAIL IS CAST IF SLIP FORMING IS USED.

FOR PILE SPLICE DETAILS, SEE SHEET 4 OF 4.

FOR WING DETAILS, SEE SHEET 3 OF 4.

THE CONTRACTOR HAS THE OPTION TO OMIT THE LATERAL GUIDE IF APPROVED BY THE ENGINEER.

ELEVATIONS OF NOTED POINTS	TOP OF CAP	BOTTOM OF CAP
POINT A	2064.940	2062.440
POINT B	2064.940	2062.440
POINT C	2066.497	2063.997
POINT D	2066.497	2063.997

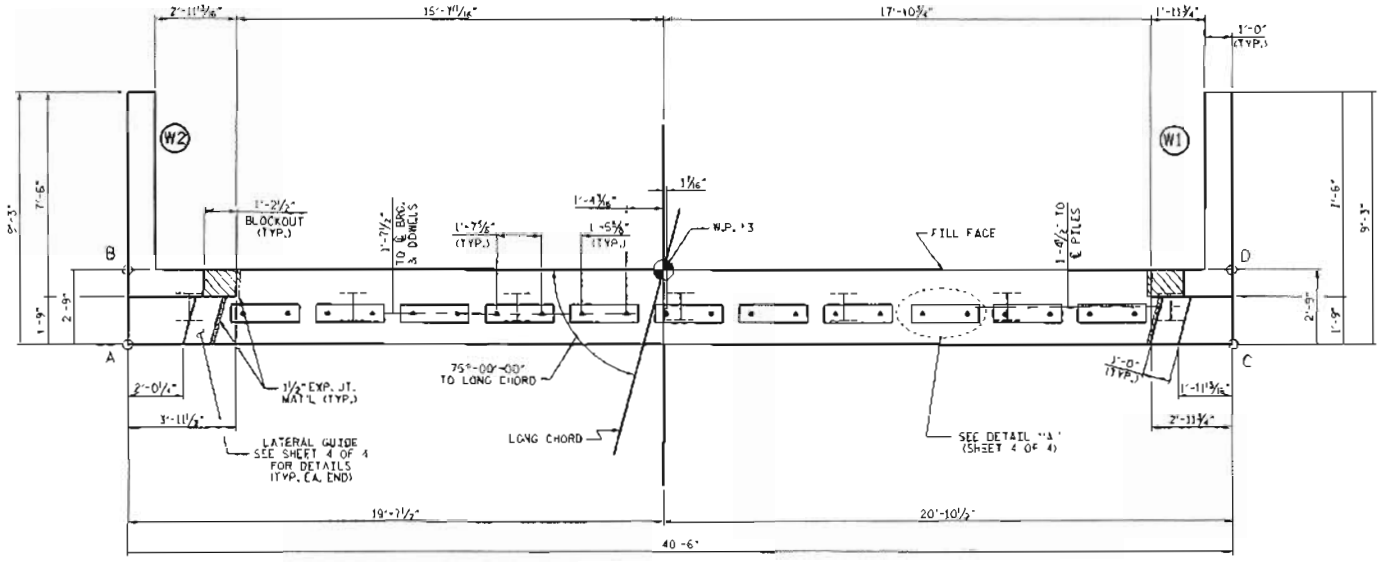

PLAN

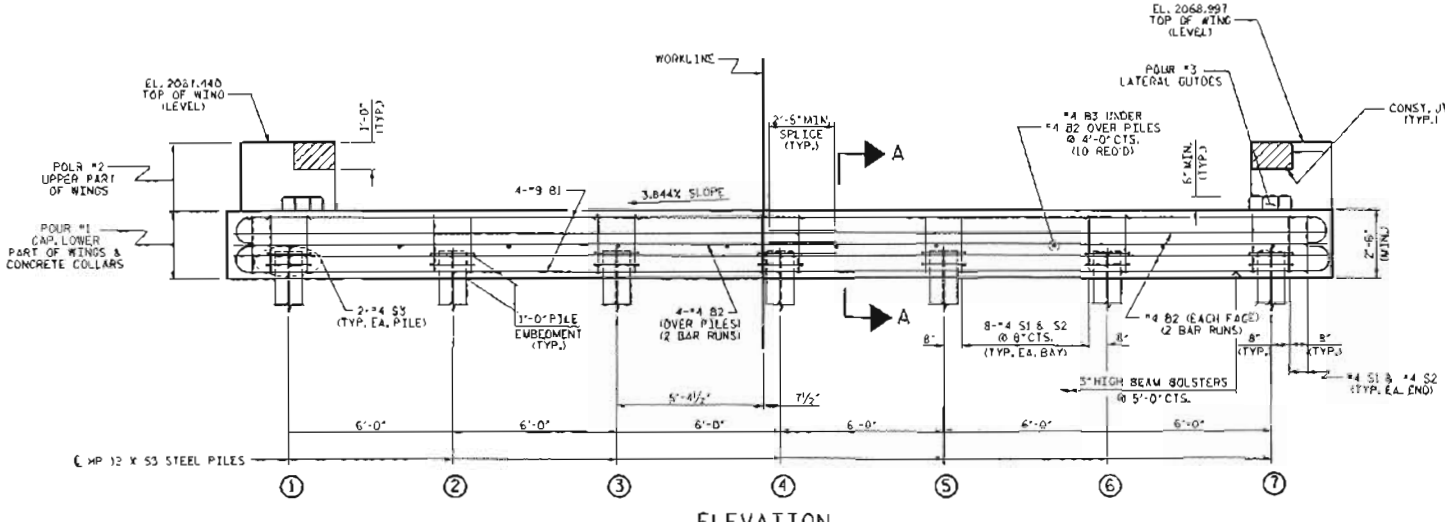

ELEVATION

WINGS NOT SHOWN FOR CLARITY.
FOR SECTION A-A, SEE SHEET 4 OF 4.
CONCRETE COLLARS FOR STEEL PILES NOT SHOWN IN PLAN AND ELEVATION VIEWS FOR CLARITY.
SEE "CORROSION PROTECTION FOR STEEL PILES DETAIL", SHEET 4 OF 4.

TOP OF PILE ELEVATIONS	
1	2063.546
2	2063.776
3	2064.007
4	2064.238
5	2064.468
6	2064.699
7	2064.929

PROJECT NO. BD-5114C
GRAHAM COUNTY
STATION: 11+41.00 -L-

SHEET 1 OF 3

STATE OF NORTH CAROLINA
DEPARTMENT OF TRANSPORTATION
RALEIGH

SUBSTRUCTURE
END BENT No. 2

NORTH CAROLINA PROFESSIONAL SEAL 15779 ENGINEER JOHN R. DUGGINS, JR.
1/26/12

ASSEMBLED BY :	A. SORSENOWN	DATE :	8/2008
CHECKED BY :	H. KIM	DATE :	10/2008
DRAWN BY :	GGE		03/10
CHECKED BY :	MRT		03/10

REVISIONS							
NO.	BY:	DATE:	NO.	BY:	DATE:	SHEET NO. S-16	
1			3			TOTAL SHEETS 24	
2			4				

12-Jan-2012 11:06
R:\Structures\Working\BD-5114C S2_E_001.dgn
jdunigan

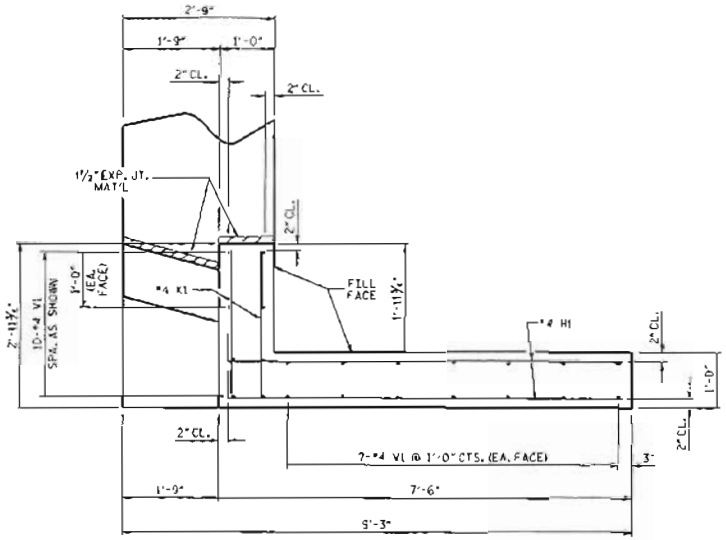

PLAN OF WING (W1)

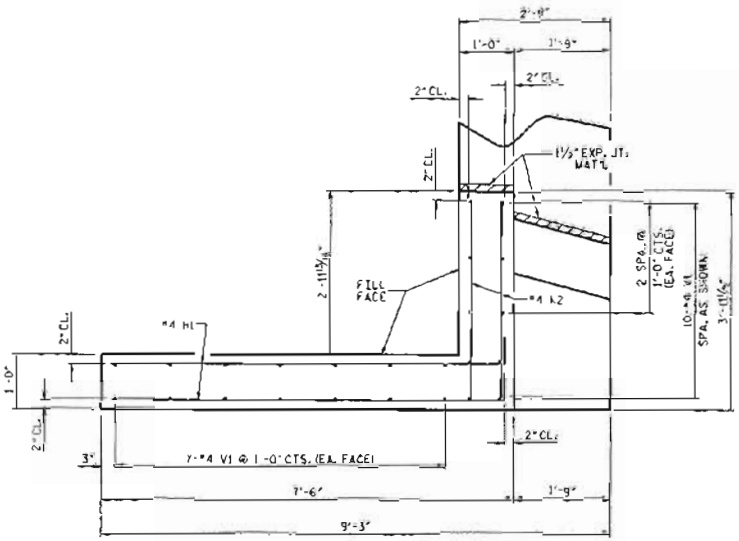

PLAN OF WING (W2)

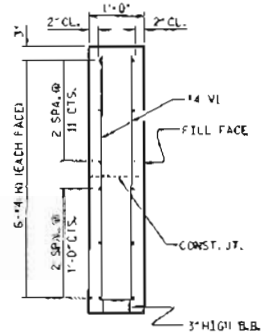

SECTION X-X

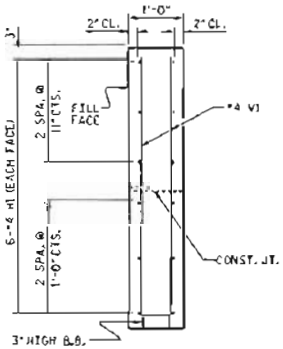

SECTION Y-Y

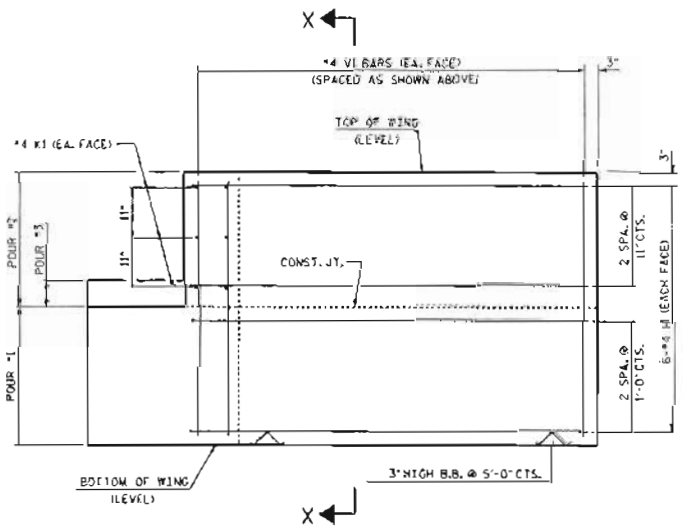

ELEVATION OF WING (W1)

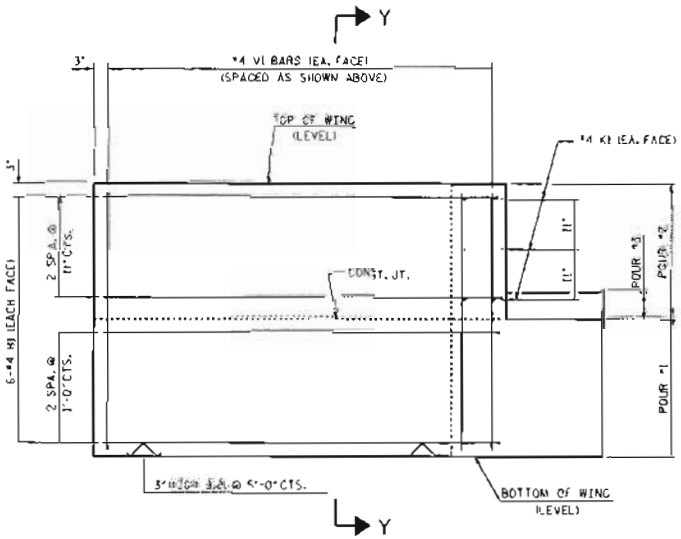

ELEVATION OF WING (W2)

WING DETAILS

PROJECT NO. BD-5114C

GRAHAM COUNTY

STATION: 11+41.00 -L-

SHEET 2 OF 3

STATE OF NORTH CAROLINA
DEPARTMENT OF TRANSPORTATION
RALEIGH

SUBSTRUCTURE

END BENT NO. 2
WING DETAILS

NORTH CAROLINA PROFESSIONAL SEAL 15779 ENGINEER JOHN R. DECONCINI

1/12/12

ASSEMBLED BY : A. SORSENSINH	DATE : 8/2011
CHECKED BY : H. KIM	DATE : 10/2011
DRAWN BY : DGE	02/03
CHECKED BY : MCK	02/10

REVISIONS							
NO.	BY:	DATE:	NO.	BY:	DATE:	SHEET NO.	
1			3			S-17	
2			4			TOTAL SHEETS	
						21	

12-JAN-2012 11:31
R:\STructure\Wing details\BD-5114C S2_2.dgn

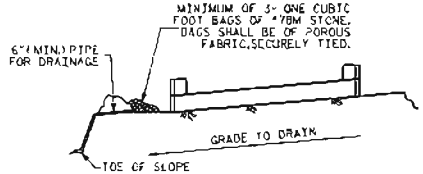

BAGGED STONE AND PIPE SHALL BE PLACED IMMEDIATELY AFTER COMPLETION OF END BENT EXCAVATION. PIPE MAY BE EITHER CONCRETE, CORRUGATED STEEL, CORRUGATED ALUMINUM ALLOY, OR CORRUGATED PLASTIC. PERFORATED PIPE WILL NOT BE ALLOWED.

BAGGED STONE SHALL REMAIN IN PLACE UNTIL THE ENGINEER DIRECTS THAT IT BE REMOVED. THE CONTRACTOR SHALL REMOVE AND DISPOSE OF SILT ACCUMULATIONS AT BAGGED STONE WHEN SO DIRECTED BY THE ENGINEER. BAGS SHALL BE REMOVED AND REPLACED WHENEVER THE ENGINEER DETERMINES THAT THEY HAVE DETERIORATED AND LOST THEIR EFFECTIVENESS.

NO SEPARATE PAYMENT WILL BE MADE FOR THIS WORK AND THE ENTIRE COST OF THIS WORK SHALL BE INCLUDED IN THE UNIT CONTRACT PRICE BID FOR THE SEVERAL PAY ITEMS.

TEMPORARY DRAINAGE AT END BENT

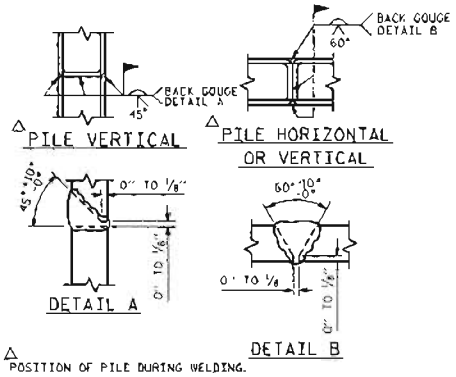

△ POSITION OF PILE DURING WELDING.

PILE SPLICE DETAILS

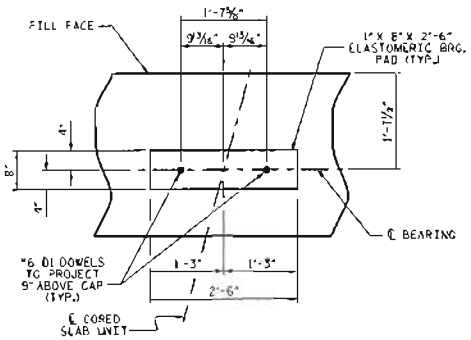

DETAIL "A"

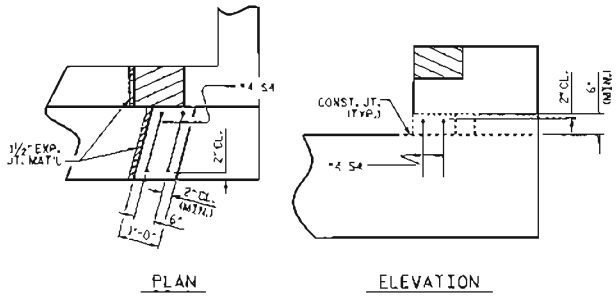

PLAN ELEVATION

LATERAL GUIDE DETAILS

(RIGHT LATERAL GUIDE SHOWN, LEFT END SIMILAR)

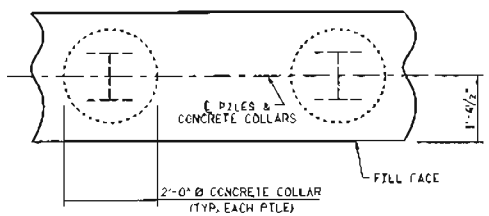

PLAN

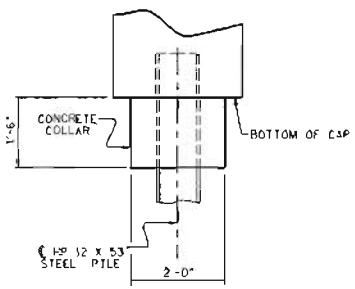

ELEVATION

CORROSION PROTECTION FOR STEEL PILES DETAIL

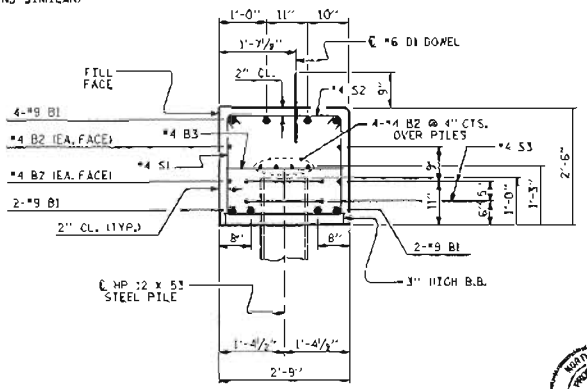

SECTION A-A

(CONCRETE COLLAR NOT SHOWN FOR CLARITY. SEE "CORROSION PROTECTION FOR STEEL PILES DETAIL.")

BAR TYPES

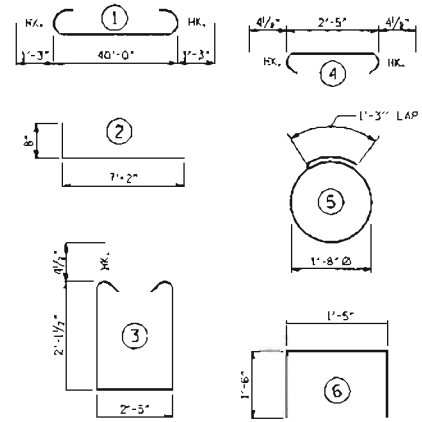

ALL BAR DIMENSIONS ARE OUT TO OUT.

END BENT No. 2
HP 12 X 53 STEEL PILES
KDOT LIN FT = 310

BILL OF MATERIAL

END BENT NO. 2

BAR	NO.	SIZE	TYPE	LENGTH	WEIGHT
B1	8	#9	1	42'-6"	1156
B2	16	#4	STR	21'-4"	228
B3	10	#4	STR	2'-5"	16
D1	22	#6	STR	1'-6"	50
M1	24	#4	2	7'-10"	126
K1	6	#4	STR	2'-8"	11
K2	6	#4	STR	3'-7"	14
S1	52	#4	3	7'-5"	258
S2	52	#4	4	3'-2"	110
S3	14	#4	5	6'-6"	61
S4	4	#4	6	4'-5"	12
V1	48	#4	STR	4'-8"	150

REINFORCING STEEL (FOR ONE END BENT) 2192 LBS.

CLASS A CONCRETE BREAKDOWN (FOR ONE END BENT)

POUR #1	CAP, LOWER PART OF WINGS & COLLARS	12.8 C.Y.
POUR #2	UPPER PART OF WINGS	1.8 C.Y.
POUR #3	LATERAL GUIDES	0.1 C.Y.
TOTAL CLASS A CONCRETE		14.7 C.Y.

PROJECT NO. BD-5114C
GRAHAM COUNTY
STATION: 11+41.00 -L-

SHEET 3 OF 3

STATE OF NORTH CAROLINA
DEPARTMENT OF TRANSPORTATION
RALEIGH

SUBSTRUCTURE

END BENT No. 2 DETAILS

NORTH CAROLINA PROFESSIONAL SEAL 15779 ENGINEER JOHN R. DUCKWORTH
1/12/12

REVISIONS								SHEET NO.
NO.	BY:	DATE:	NO.	BY:	DATE:			9-16
1			3					TOTAL SHEETS
2			4					21

ASSEMBLED BY :	A. SORENSON	DATE : 8/201
CHECKED BY :	N. KAP	DATE : 10/201
DRAWN BY :	DOE	02/10
CHECKED BY :	NKT	02/10

12-JAN-2012 11:33
R:\Structures\Working\BD-5114C_SD_3.dgn
SDUDRYN

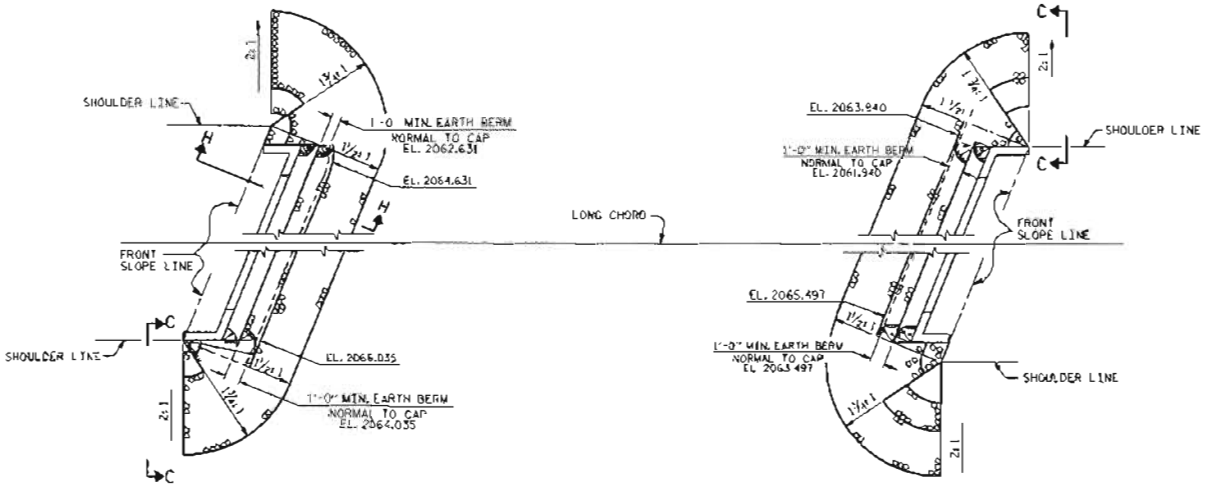

END BENT #1

PLAN

END BENT #2

ESTIMATED QUANTITIES		
BRIDGE @ STA. 13+41.00 -L-	RIP RAP CLASS II (2'-0" THICK)	FILTER FABRIC FOR DRAINAGE
	TONS	SQUARE YARDS
END BENT 1	75	85
END BENT 2	80	90

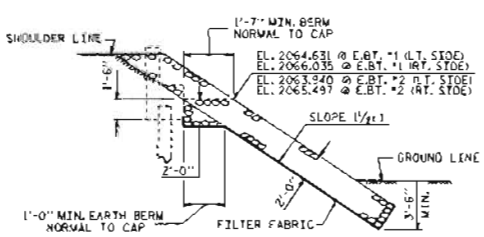

SECTION H-H

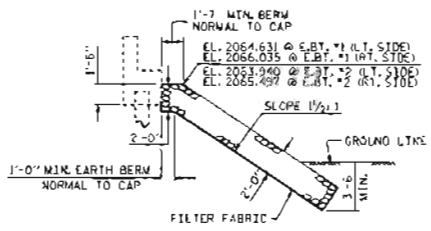

℄ SECTION
BERM RIP RAPPED

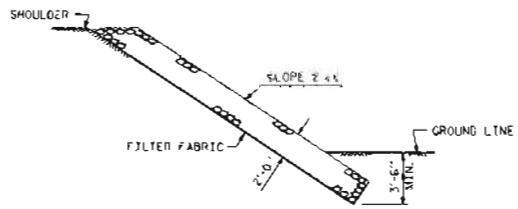

SECTION C-C

PROJECT NO. BD-5114C
GRAHAM COUNTY
STATION: 11+41.00 -L-

STATE OF NORTH CAROLINA
DEPARTMENT OF TRANSPORTATION
RALEIGH

STANDARD
RIP RAP DETAILS

NORTH CAROLINA PROFESSIONAL SEAL 15779 ENGINEER J. R. DUGGINS, JR.
1/12/12

ASSEMBLED BY :	A. SORSENKAM	DATE :	9/206
CHECKED BY :	J. R. DUGGINS	DATE :	9/201
DRAWN BY :	REK	VBK	REV. 8/16/95 RKW/LES
CHECKED BY :	ROU	1/94	REV. 10/17/00 RKW/LES
			REV. 5/1/06R TLA/GM

REVISIONS

NO.	BY:	DATE:	NO.	BY:	DATE:
1			3		
2			4		

SHEET NO. 5-19
TOTAL SHEETS 21

17-JAN-2012 11:13
R:\Structures\BD5114C\Roadway\BD-5114C_SD_RR.dgn
jduggins

NOTES

FOR BRIDGE APPROACH FILL INCLUDING GEOTEXTILE, 4" Ø DRAINAGE PIPE, AND #78M STONE BACKFILL, SEE ROADWAY PLANS.

GEOTEXTILE SHALL BE TYPE 1 IN ACCORDANCE WITH THE STANDARD SPECIFICATIONS SECTION 1056.

#78M STONE BACKFILL (CLASS V SELECT MATERIAL) SHALL BE IN ACCORDANCE WITH STANDARD SPECIFICATIONS SECTION 1016.

#78M STONE BACKFILL IS TO BE CONTINUOUS ALONG FILL FACE OF BACKWALL FROM OUTSIDE EDGE TO OUTSIDE EDGE OF APPROACH SLAB.

FOR THE 4" Ø DRAINAGE PIPE OUTLET(S), SEE ROADWAY STANDARD DRAWINGS.

AREA BETWEEN THE WINGWALL AND APPROACH SLAB SHALL BE GRADED TO DRAIN THE WATER AWAY FROM THE FILL FACE OF THE BRIDGE AND SHALL BE PAVED. SEE ROADWAY PLANS.

FOR JOINT DETAILS, SEE "PRESTRESSED CONCRETE CORED SLAB UNIT" SHEETS, "OPTIONAL JOINT DETAIL."

THE JOINT AT THE END BENT SHALL BE GROUTED AS SOON AS PRACTICAL AFTER THE CONSTRUCTION OF THE APPROACH SLABS.

THE CONTRACTOR HAS THE OPTION TO DUTT GROUT BETWEEN THE APPROACH SLAB AND THE CORED SLAB UNITS AND POUR THE APPROACH SLAB DIRECTLY AGAINST THE CORED SLAB UNITS. SEE "OPTIONAL JOINT DETAIL".

APPROACH SLAB GROOVING IS NOT REQUIRED.

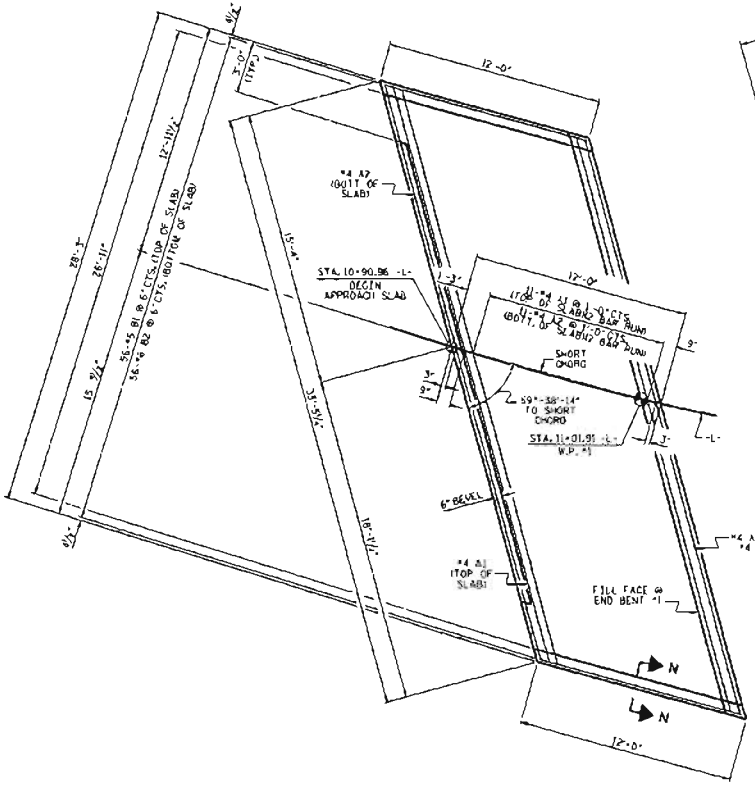

PLAN @ END BENT #1

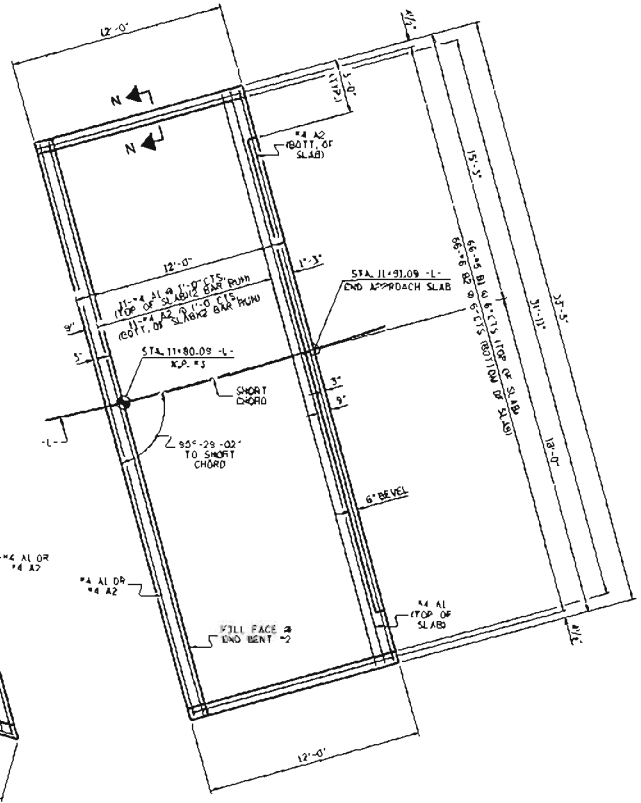

PLAN @ END BENT #2

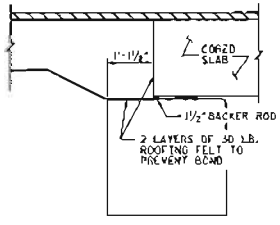

OPTIONAL JOINT DETAIL

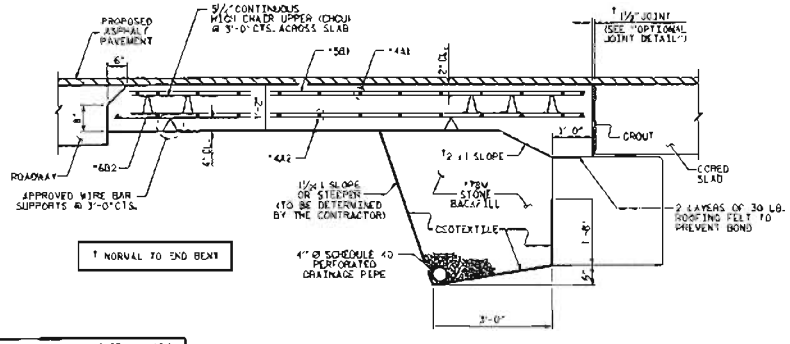

SECTION THRU SLAB

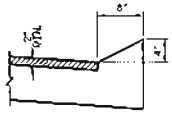

SECTION N-N

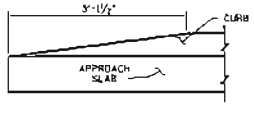

END OF CURB WITHOUT SHOULDER BERM GUTTER

CURB DETAILS

BRIDGE NO. BD-5114C

GRAHAM COUNTY

STATION: 11+41.00 -L-

SHEET 1 OF 2

STATE OF NORTH CAROLINA
DEPARTMENT OF TRANSPORTATION
DIVISION

BRIDGE APPROACH SLAB FOR PRESTRESSED CONCRETE CORED SLAB UNIT (SUB-REGIONAL TIER)

REVISIONS								SHEET NO.
NO.	BY:	DATE:	NO.	BY:	DATE:			S-20
1			3					TOTAL SHEETS 21
2			4					

NORTH CAROLINA PROFESSIONAL SEAL 15079 ENGINEER JOHN R. CUCCIA

1/12/12

ASSEMBLED BY :	A. SORSENGIANI	DATE :	8/2011
CHECKED BY :	H. KIM	DATE :	10/2011
DRAWN BY :	SMS/MAL	5-09	
CHECKED BY :	BCH	5-09	

12-JAN-2012 11:17
H:\STRUCTURES\Karogestion\BD-5114C SD.S20.dgn
3Dv07.16

SPLICE LENGTHS		
BAR SIZE	EPOXY COATED	UNCOATED
#4	2'-0"	1'-9"
#5	2'-6"	2'-2"
#6	3'-10"	2'-7"

BILL OF MATERIAL

APPROACH SLAB AT EB #1

BAR	NO.	SIZE	TYPE	LENGTH	WEIGHT
* A1	26	#4	STR	17'-6"	304
A2	26	#4	STR	17'-5"	302
* B1	56	#5	STR	11'-1"	647
B2	56	#6	STR	11'-7"	974
REINFORCING STEEL				LBS.	1276
* EPOXY COATED REINFORCING STEEL				LBS.	951
CLASS AA CONCRETE				C.Y.	14.6

APPROACH SLAB AT EB #2

BAR	NO.	SIZE	TYPE	LENGTH	WEIGHT
* A1	26	#4	STR	17'-6"	304
A2	26	#4	STR	17'-5"	302
* B1	66	#5	STR	11'-1"	763
B2	66	#6	STR	11'-7"	1148
REINFORCING STEEL				LBS.	1450
* EPOXY COATED REINFORCING STEEL				LBS.	1067
CLASS AA CONCRETE				C.Y.	16.8

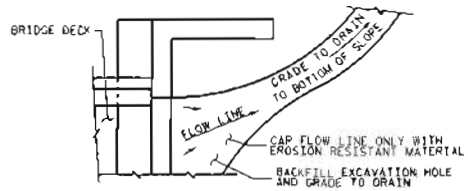

IF THE APPROACH SLAB IS NOT CONSTRUCTED IMMEDIATELY AFTER THE BACKFILLING OF THE END BENT EXCAVATION, GRADE TO DRAIN TO THE BOTTOM OF THE SLOPE AND PROVIDE EROSION RESISTANT MATERIAL, SUCH AS FIBERGLASS ROVING OR AS DIRECTED BY THE ENGINEER TO PREVENT SOIL EROSION AND TO PROTECT THE AREA ADJACENT TO THE STRUCTURE. THE CONTRACTOR WILL BE REQUIRED TO REMOVE THESE MATERIALS PRIOR TO CONSTRUCTION OF THE APPROACH SLAB.

TEMPORARY DRAINAGE DETAIL

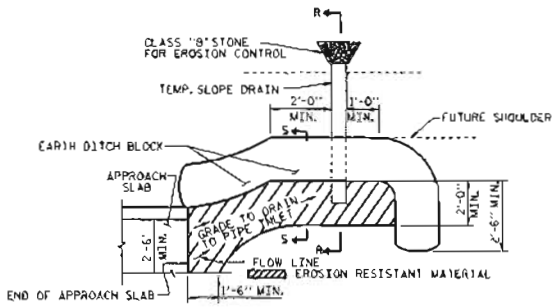

NOTE: IMMEDIATELY AFTER THE CONSTRUCTION OF THE APPROACH SLAB, THE CONTRACTOR SHALL PROVIDE TEMPORARY BERM AND SLOPE DRAIN. CONTRACTOR SHALL GRADE TO PIPE INLET AND PROVIDE EROSION RESISTANT MATERIAL AS SHOWN. THE EROSION RESISTANT MATERIAL SHALL BE EITHER 1) ASPHALT PLANT MIX, TYPE 1 OR TYPE 2, MIN. 2" DEPTH, 2) EROSION CONTROL MAT. OR 3) CONCRETE, AS DIRECTED BY THE ENGINEER. THE SLOPE DRAIN SHALL CONSIST OF A NON-PERFORATED TEMPORARY DRAINAGE PIPE, 12 INCHES IN DIAMETER.

PLAN VIEW

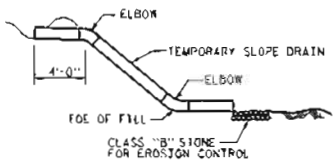

SECTION R-R

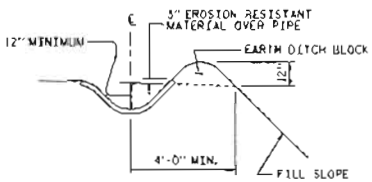

SECTION S-S

TEMPORARY BERM AND SLOPE DRAIN DETAILS

PROJECT NO. BD-5114C

GRAHAM COUNTY

STATION: 11+41.00 -L-

SHEET 2 OF 2

STATE OF NORTH CAROLINA
DEPARTMENT OF TRANSPORTATION
RALEIGH

BRIDGE APPROACH SLAB DETAILS

ASSEMBLED BY : A. SORSENGINN	DATE : 8/2011
CHECKED BY : H. KIM	DATE : 10/2011

DRAWN BY : FCJ	11/98	REV. 8/16/99	WAD/LES
CHECKED BY : APB	11/98	REV. 10/17/00	RAW/LES
		REV. 5/7/03	RAW/JTE

REVISIONS								SHEET NO.
NO.	BY:	DATE:	NO.	BY:	DATE:			S-21
1			3					TOTAL SHEETS
2			4					21

NORTH CAROLINA PROFESSIONAL SEAL 15779 ENGINEER

11/12/12

17-JAN-2012 13:14
R:\Structures\Working\BD-5114C_SD_BS060
fdodgins

STANDARD NOTES

DESIGN DATA:

SPECIFICATIONS	A.A.S.H.T.O. (CURRENT)
LIVE LOAD	SEE PLANS
IMPACT ALLOWANCE	SEE A.A.S.H.T.O.
STRESS IN EXTREME FIBER OF	
STRUCTURAL STEEL - AASHTO M270 GRADE 36	20,000 LBS. PER SQ. IN.
- AASHTO M270 GRADE 50W	27,000 LBS. PER SQ. IN.
- AASHTO M270 GRADE 50	27,000 LBS. PER SQ. IN.
REINFORCING STEEL IN TENSION	
GRADE 60	24,000 LBS. PER SQ. IN.
CONCRETE IN COMPRESSION	1,200 LBS. PER SQ. IN.
CONCRETE IN SHEAR	SEE A.A.S.H.T.O.
STRUCTURAL TIMBER - TREATED OR	
UNTREATED - EXTREME FIBER STRESS	1,800 LBS. PER SQ. IN.
COMPRESSION PERPENDICULAR TO GRAIN OF TIMBER	375 LBS. PER SQ. IN.
EQUIVALENT FLUID PRESSURE OF EARTH	30 LBS. PER CU. FT. (MINIMUM)

MATERIAL AND WORKMANSHIP:

EXCEPT AS MAY OTHERWISE BE SPECIFIED ON PLANS OR IN THE SPECIAL PROVISIONS, ALL MATERIAL AND WORKMANSHIP SHALL BE IN ACCORDANCE WITH THE 2012 "STANDARD SPECIFICATIONS FOR ROADS AND STRUCTURES" OF THE N. C. DEPARTMENT OF TRANSPORTATION.

STEEL SHEET PILING FOR PERMANENT OR TEMPORARY APPLICATIONS SHALL BE HOT ROLLED.

CONCRETE:

UNLESS OTHERWISE REQUIRED ON PLANS, CLASS A CONCRETE SHALL BE USED FOR ALL PORTIONS OF ALL STRUCTURES WITH THE EXCEPTION THAT: CLASS AA CONCRETE SHALL BE USED IN BRIDGE SUPERSTRUCTURES, ABUTMENT BACKWALLS, AND APPROACH SLABS; AND CLASS B CONCRETE SHALL BE USED FOR SLOPE PROTECTION AND RIP RAP.

CONCRETE CHAMFERS:

UNLESS OTHERWISE NOTED ON THE PLANS, ALL EXPOSED CORNERS ON STRUCTURES SHALL BE CHAMFERED 3/4" WITH THE FOLLOWING EXCEPTIONS: TOP CORNERS OF CURBS MAY BE ROUNDED TO 1-1/2" RADIUS WHICH IS BUILT INTO CURB FORMS; CORNERS OF TRANSVERSE FLOOR EXPANSION JOINTS SHALL BE ROUNDED WITH A 1/4" FINISHING TOOL UNLESS OTHERWISE REQUIRED ON PLANS; AND CORNERS OF EXPANSION JOINTS IN THE ROADWAY FACES AND TOPS OF CURBS AND SIDEWALKS SHALL BE ROUNDED TO A 1/4" RADIUS WITH A FINISHING STONE OR TOOL UNLESS OTHERWISE REQUIRED ON PLANS.

DOWELS:

DOWELS WHEN INDICATED ON PLANS AS FOR CULVERT EXTENSIONS, SHALL BE EMBEDDED AT LEAST 12" INTO THE OLD CONCRETE AND GROUTED INTO PLACE WITH 1:2 CEMENT MORTAR.

ALLOWANCE FOR DEAD LOAD DEFLECTION, SETTLEMENT, ETC. IN CASTING SUPERSTRUCTURES:

BRIDGES SHALL BE BUILT ON THE GRADE OR VERTICAL CURVE SHOWN ON PLANS. SLABS, CURBS AND PARAPETS SHALL CONFORM TO THE GRADE OR CURVE.

ALL DIMENSIONS WHICH ARE GIVEN IN SECTION AND ARE AFFECTED BY DEAD LOAD DEFLECTIONS ARE DIMENSIONS AT CENTER LINE OF BEARING UNLESS OTHERWISE NOTED ON PLANS. IN SETTING FORMS FOR STEEL BEAM BRIDGES AND PRESTRESSED CONCRETE GIRDER BRIDGES, ADJUSTMENTS SHALL BE MADE DUE TO THE DEAD LOAD DEFLECTIONS FOR THE ELEVATIONS SHOWN. WHERE BLOCKS ARE SHOWN OVER BEAMS FOR BUILDING UP TO THE SLAB, THE VERTICAL DIMENSIONS OF THE BLOCKS SHALL BE ADJUSTED BETWEEN BEARINGS TO COMPENSATE FOR DEAD LOAD DEFLECTIONS, VERTICAL CURVE ORDINATE, AND ACTUAL BEAM CAMBER. WHERE BOTTOM OF SLAB IS IN LINE WITH BOTTOM OF TOP FLANGES, DEPTH OF SLAB BETWEEN BEARINGS SHALL BE ADJUSTED TO COMPENSATE FOR DEAD LOAD DEFLECTION, VERTICAL CURVE ORDINATE, AND ACTUAL BEAM CAMBER.

IN SETTING FALSEWORK AND FORMS FOR REINFORCED CONCRETE SPANS, AN ALLOWANCE SHALL BE MADE FOR DEAD LOAD DEFLECTIONS, SETTLEMENT OF FALSEWORK, AND PERMANENT CAMBER WHICH SHALL BE PROVIDED FOR IN ADDITION TO THE ELEVATIONS SHOWN. AFTER REMOVAL OF THE FALSEWORK, THE FINISHED STRUCTURES SHALL CONFORM TO THE PROFILE AND ELEVATIONS SHOWN ON THE PLANS AND CONSTRUCTION ELEVATIONS FURNISHED BY THE ENGINEER.

DETAILED DRAWINGS FOR FALSEWORK OR FORMS FOR BRIDGE SUPERSTRUCTURE AND ANY STRUCTURE OR PARTS OF A STRUCTURE AS NOTED ON THE PLANS SHALL BE SUBMITTED TO THE ENGINEER FOR APPROVAL BEFORE CONSTRUCTION OF THE FALSEWORK OR FORMS IS STARTED.

REINFORCING STEEL:

ALL REINFORCING STEEL SHALL BE DEFORMED. DIMENSIONS RELATIVE TO PLACEMENT OF REINFORCING ARE TO CENTERS OF BARS UNLESS OTHERWISE INDICATED IN THE PLANS. DIMENSIONS ON BAR DETAILS ARE TO CENTERS OF BARS OR ARE OUT TO OUT AS INDICATED ON PLANS.

WIRE BAR SUPPORTS SHALL BE PROVIDED FOR REINFORCING STEEL WHERE INDICATED ON THE PLANS. WHEN BAR SUPPORT PIECES ARE PLACED IN CONTINUOUS LINES, THEY SHALL BE SO PLACED THAT THE ENDS OF THE SUPPORTING WIRES SHALL BE LAPPED TO LOCK LEGS ON ADJOINING PIECES.

STRUCTURAL STEEL:

AT THE CONTRACTOR'S OPTION, HE MAY SUBSTITUTE 7/8" Ø SHEAR STUDS FOR THE 3/4" Ø STUDS SPECIFIED ON THE PLANS. THIS SUBSTITUTION SHALL BE MADE AT THE RATE OF 3 - 7/8" Ø STUDS FOR 4 - 3/4" Ø STUDS, AND STUD SPACING CHANGES SHALL BE MADE AS NECESSARY TO PROVIDE THE SAME EQUIVALENT NUMBER OF 7/8" Ø STUDS ALONG THE BEAM AS SHOWN FOR 3/4" Ø STUDS BASED ON THE RATIO OF 3 - 7/8" Ø STUDS FOR 4 - 3/4" Ø STUDS. STUDS OF THE LENGTH SPECIFIED ON THE PLANS MUST BE PROVIDED. THE MAXIMUM SPACING SHALL BE 2'-0".

EXCEPT AT THE INTERIOR SUPPORTS OF CONTINUOUS BEAMS WHERE THE COVER PLATE IS IN CONTACT WITH BEARING PLATE, THE CONTRACTOR MAY, AT HIS OPTION, SUBSTITUTE FOR THE COVER PLATES DESIGNATED ON THE PLANS COVER PLATES OF THE EQUIVALENT AREA PROVIDED THESE PLATES ARE AT LEAST 5/16" IN THICKNESS AND DO NOT EXCEED A WIDTH EQUAL TO THE FLANGE WIDTH LESS 2" OR A THICKNESS EQUAL TO 2 TIMES THE FLANGE THICKNESS. THE SIZE OF FILLET WELDS SHALL CONFORM TO THE REQUIREMENTS OF THE CURRENT ANSI/AASHTO/AWS "BRIDGE WELDING CODE". ELECTROSLAG WELDING WILL NOT BE PERMITTED.

WITH THE SOLE EXCEPTION OF EDGES AT SURFACES WHICH BEAR ON OTHER SURFACES, ALL SHARP EDGES AND ENDS OF SHAPES AND PLATES SHALL BE SLIGHTLY ROUNDED BY SUITABLE MEANS TO A RADIUS OF APPROXIMATELY 1/16 INCH OR EQUIVALENT FLAT SURFACE AT A SUITABLE ANGLE PRIOR TO PAINTING, GALVANIZING, OR METALLIZING.

HANDRAILS AND POSTS:

METAL STANDARDS AND FACES OF THE CONCRETE END POSTS FOR THE METAL RAIL SHALL BE SET NORMAL TO THE GRADE OF THE CURB, UNLESS OTHERWISE SHOWN ON PLANS. THE METAL RAIL AND TOPS OF CONCRETE POSTS USED WITH THE ALUMINUM RAIL SHALL BE BUILT PARALLEL TO THE GRADE OF THE CURB.

METAL HANDRAILS SHALL BE IN ACCORDANCE WITH THE PLANS. RAILS SHALL BE AS MANUFACTURED FOR BRIDGE RAILING. CASTINGS SHALL BE OF A UNIFORM APPEARANCE. FINS AND OTHER DEFORMATIONS RESULTING FROM CASTING OR OTHERWISE SHALL BE REMOVED IN A MANNER SO THAT A UNIFORM COLORING OF THE COMPLETED CASTING SHALL BE OBTAINED. CASTINGS WITH DISCOLORATIONS OR OF NON-UNIFORM COLORING WILL NOT BE ACCEPTED. CERTIFIED MILL REPORTS ARE REQUIRED FOR METAL RAILS AND POSTS.

SPECIAL NOTES:

GENERALLY, IN CASE OF DISCREPANCY, THIS STANDARD SHEET OF NOTES SHALL GOVERN OVER THE SPECIFICATIONS, BUT THE REMAINDER OF THE PLANS SHALL GOVERN OVER NOTES HEREON, AND SPECIAL PROVISIONS SHALL GOVERN OVER ALL. SEE SPECIFICATIONS ARTICLE 105-4.

ENGLISH

JANUARY, 1990

STD. NO. SN