PROJECT REFERENCE NO.	SHEET NO.
44157.3.1	EC-3

STATE OF
NORTH CAROLINA
DEPT. OF TRANSPORTATION
DIVISION OF HIGHWAYS
RALEIGH, N.C.

ENGLISH STANDARD DRAWING FOR
TEMPORARY SILT FENCE

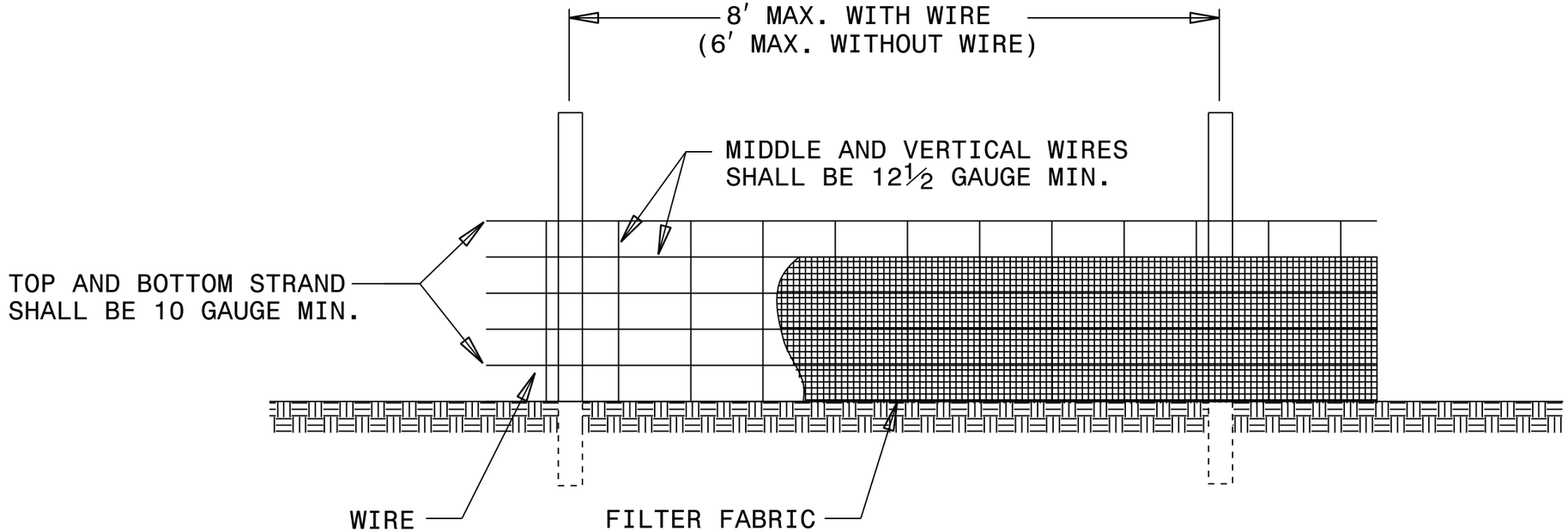

NOTES

USE WIRE A MINIMUM OF 32″ IN WIDTH AND WITH A MINIMUM OF 6 LINE WIRES WITH 12″ STAY SPACING.

USE FILTER FABRIC A MINIMUM OF 36″ IN WIDTH AND FASTEN ADEQUATELY TO THE WIRE AS DIRECTED BY THE ENGINEER.

PROVIDE 5′-0″ STEEL POST OF THE SELF-FASTENER ANGLE STEEL TYPE.

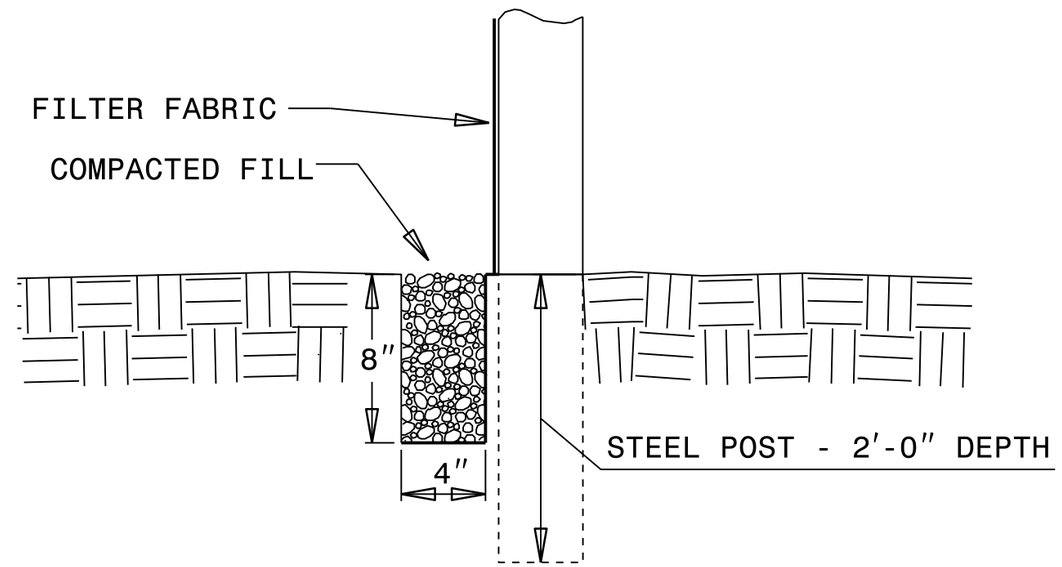

EXTENSION OF FABRIC AND
WIRE INTO TRENCH

STATE OF
NORTH CAROLINA
DEPT. OF TRANSPORTATION
DIVISION OF HIGHWAYS
RALEIGH, N.C.

ENGLISH STANDARD DRAWING FOR
TEMPORARY SILT FENCE

SHEET 1 OF 1
1605.01