STATE	STATE PROJECT REFERENCE NO.	SHEET NO.	TOTAL SHEETS
N.C.	17BP.14.R.9	1	

STATE PROJ. NO.	F. A. PROJ. NO.	DESCRIPTION
17BP.14.R.9		

STATE OF NORTH CAROLINA
DIVISION OF HIGHWAYS

HAYWOOD COUNTY

LOCATION: BRIDGE NO. 61 ON SR 1164 OVER PLOTT CREEK

TYPE OF WORK: GRADING, PAVING, DRAINAGE, SIGNING, AND STRUCTURE

See Sheet 1-A For Index of Sheets
See Sheet 1-B For Conventional Symbols

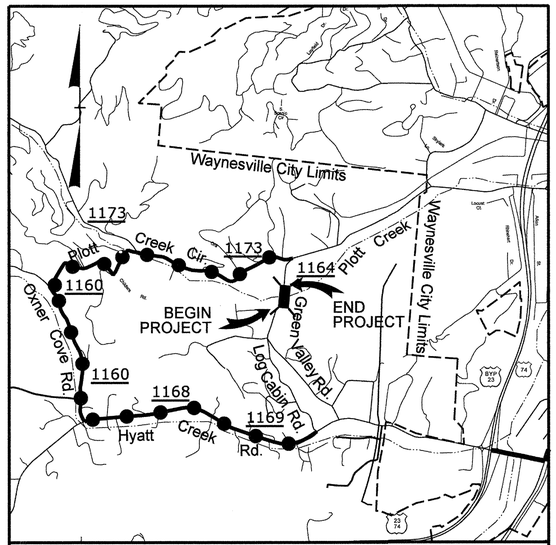

VICINITY MAP ***NTS***

OFF-SITE DETOUR

FINAL PLANS

4

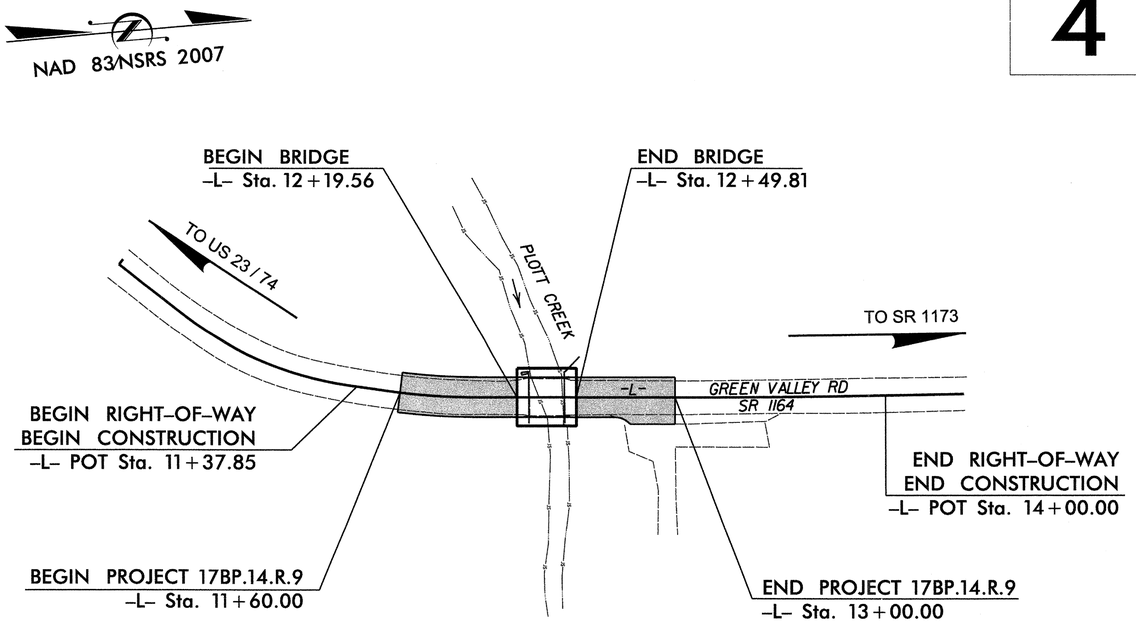

NCDOT CONTACT:
JOSH DEYTON, PE
HIGHWAY DIVISION 14
BRIDGE MANAGER

INCOMPLETE PLANS
DO NOT USE FOR R/W ACQUISITION

PRELIMINARY PLANS
DO NOT USE FOR CONSTRUCTION

PROJECT: 17BP.14.R.9

CONTRACT: DN00142

7/26/2013 8:30:27 AM
G:\DR Projects\DR1100 - NCDOT Group W\430061\Roadway\Proj\430061_RDY_00_TSH.dgn
G:\CADDYPlot\DR1100\1100_rdy.tbl

GRAPHIC SCALES

20 10 0 20 40
PLANS

20 10 0 20 40
PROFILE (HORIZONTAL)

4 2 0 4 8
PROFILE (VERTICAL)

DESIGN DATA*

ADT 2008 = 630
ADT =
DHV = %
D = %
T = % *
V = 35 MPH
* TTST = DUAL
FUNC CLASS =
MINOR COLLECTOR
SUBREGIONAL TIER

PROJECT LENGTH

LENGTH ROADWAY PROJECT	=	0.021 MILES
LENGTH STRUCTURES PROJECT	=	0.006 MILES
TOTAL LENGTH PROJECT	=	0.027 MILES

Prepared In the Office of:
THE LOUIS BERGER GROUP, Inc.
1001 Wade Avenue, Suite 400
Raleigh, North Carolina 27605
License No.: F-0840

2012 STANDARD SPECIFICATIONS

RIGHT OF WAY DATE:
January 8, 2013

LETTING DATE:
August 27, 2013

DEAN D. HATFIELD, PE
PROJECT ENGINEER

WILLIAM E. TILLITT, PE
PROJECT DESIGN ENGINEER

HYDRAULICS ENGINEER

NORTH CAROLINA PROFESSIONAL SEAL 20744 ENGINEER DAVID L. SMITH 7/26/13

SIGNATURE: P.E.

ROADWAY DESIGN ENGINEER

NORTH CAROLINA PROFESSIONAL SEAL 16003 ENGINEER DEAN D. HATFIELD 7/26/13

SIGNATURE: P.E.

DIVISION OF HIGHWAYS
STATE OF NORTH CAROLINA

STATE OF NORTH CAROLINA DEPARTMENT OF TRANSPORTATION

STATE HIGHWAY DESIGN ENGINEER P.E.

PROJECT REFERENCE NO.	SHEET NO.
17BP.14.R.9	1-A

ROADWAY DESIGN ENGINEER

NORTH CAROLINA PROFESSIONAL SEAL 16003 ENGINEER DREW N. D. HAFFNER

7/26/2013

STATE OF NORTH CAROLINA
DIVISION OF HIGHWAYS

INDEX OF SHEETS

INDEX OF SHEETS

SHEET NUMBER	SHEET
1	TITLE SHEET
1-A	INDEX OF SHEETS, GENERAL NOTES, AND LIST OF STANDARD DRAWINGS
1-B	CONVENTIONAL SYMBOLS
1-C	SURVEY CONTROL
2	PAVEMENT SCHEDULE, TYPICAL SECTIONS, AND WEDGING DETAILS
3	SUMMARY OF QUANTITIES
3A	SUMMARIES OF EARTHWORK & GUARDRAIL
4	PLAN SHEET
5	PROFILE SHEET
TMP-1 THRU TMP-2	TRAFFIC CONTROL PLANS
PMP-1 THRU PMP-2	PAVEMENT MARKING PLANS
EC-1 THRU EC-3	EROSION CONTROL PLANS
UO-1 THRU UO-2	UTLITIES BY OTHERS PLANS
X-1 THRU X-4	CROSS-SECTIONS
S-1 THRU S-13	STRUCTURE PLANS

GENERAL NOTES

GENERAL NOTES: 2012 SPECIFICATIONS
EFFECTIVE: 01-17-12
REVISED: 11/01/11

GRADING AND SURFACING OR RESURFACING AND WIDENING:

THE GRADE LINES SHOWN DENOTE THE FINISHED ELEVATION OF THE PROPOSED SURFACING AT GRADE POINTS SHOWN ON THE TYPICAL SECTIONS. WHERE NO GRADE LINES ARE SHOWN, THE PROFILES SHOWN DENOTE THE TOP ELEVATION OF THE EXISTING PAVEMENT ALONG THE CENTER LINE OF SURVEY ON WHICH THE PROPOSED RESURFACING WILL BE PLACED. GRADE LINES MAY BE ADJUSTED BY THE ENGINEER IN ORDER TO SECURE A PROPER TIE-IN.

CLEARING:

CLEARING ON THIS PROJECT SHALL BE PERFORMED TO THE LIMITS ESTABLISHED BY METHOD III.

SUPERELEVATION:

ALL CURVES ON THIS PROJECT SHALL BE SUPERELEVATED IN ACCORDANCE WITH STD. NO. 225.04 USING THE RATE OF SUPERELEVATION AND RUNOFF SHOWN ON THE PLANS. SUPERELEVATION IS TO BE REVOLVED ABOUT THE GRADE POINTS SHOWN ON THE TYPICAL SECTIONS.

SHOULDER CONSTRUCTION:

ASPHALT, EARTH, AND CONCRETE SHOULDER CONSTRUCTION ON THE HIGH SIDE OF SUPERELEVATED CURVES SHALL BE IN ACCORDANCE WITH STD. NO. 560.01.

GUARDRAIL:

THE GUARDRAIL LOCATIONS SHOWN ON THE PLANS MAY BE ADJUSTED DURING CONSTRUCTION AS DIRECTED BY THE ENGINEER. THE CONTRACTOR SHOULD CONSULT WITH THE ENGINEER PRIOR TO ORDERING GUARDRAIL MATERIAL.

TEMPORARY SHORING:

SHORING REQUIRED FOR THE MAINTENANCE OF TRAFFIC WILL BE PAID FOR AS "EXTRA WORK" IN ACCORDANCE WITH SECTION 104-7.

END BENTS:

THE ENGINEER SHALL CHECK THE STRUCTURE END BENT PLANS, DETAILS, AND CROSS-SECTION PRIOR TO SETTING OF THE SLOPE STAKES FOR THE EMBANKMENT OR EXCAVATION APPROACHING A BRIDGE.

UTILITIES:

UTILITY OWNERS ON THIS PROJECT ARE

HAYWOOD EMC AND AT&T COMMUNICATION

ANY RELOCATION OF EXISTING UTILITIES WILL BE ACCOMPLISHED BY OTHERS.

RIGHT-OF-WAY MARKERS:

ALL RIGHT-OF-WAY MARKERS ON THIS PROJECT SHALL BE PLACED BY OTHERS.

ROADWAY ENGLISH STANDARD DRAWINGS

2012 ROADWAY ENGLISH STANDARD DRAWINGS

The following Roadway Standards as appear in "Roadway Standard Drawings" Highway Design Branch - N. C. Department of Transportation - Raleigh, N. C., Dated January, 2012 are applicable to this project and by reference hereby are considered a part of these plans:

STD.NO.	TITLE
DIVISION 2 - EARTHWORK	
200.03	Method of Clearing - Method III
225.04	Method of Obtaining Superelevation - Two Lane Pavement
DIVISION 5 - SUBGRADE, BASES AND SHOULDERS	
560.01	Method of Shoulder Construction - High Side of Superelevated Curve - Method I
DIVISION 8 - INCIDENTALS	
862.01	Guardrail Placement
862.02	Guardrail Installation
862.03	Structure Anchor Units
866.04	Barbed Wire Fence with Wood Posts (2 - 7 Strands)
876.04	Drainage Ditches with Class 'B' Rip Rap

7/26/2013 8:30:29 AM
$PENTBL1$
G:\OR Projects\OR1100 - NCDOT Group W\43006\Roadway\Proj\43006LRDY_01_1A.dgn

PROJECT REFERENCE NO.	SHEET NO.
17BP.14.R.9	1B

Note: Not to Scale

**S.U.E. = Subsurface Utility Engineering*

STATE OF NORTH CAROLINA
DIVISION OF HIGHWAYS

CONVENTIONAL PLAN SHEET SYMBOLS

BOUNDARIES AND PROPERTY:

- State Line
- County Line
- Township Line
- City Line
- Reservation Line
- Property Line
- Existing Iron Pin — EIP
- Property Corner
- Property Monument — ECM
- Parcel/Sequence Number — 123
- Existing Fence Line
- Proposed Woven Wire Fence
- Proposed Chain Link Fence
- Proposed Barbed Wire Fence
- Existing Wetland Boundary — WLB
- Proposed Wetland Boundary — WLB
- Existing Endangered Animal Boundary — EAB
- Existing Endangered Plant Boundary — EPB
- Known Soil Contamination: Area or Site
- Potential Soil Contamination: Area or Site

BUILDINGS AND OTHER CULTURE:

- Gas Pump Vent or U/G Tank Cap
- Sign — S
- Well — W
- Small Mine
- Foundation
- Area Outline
- Cemetery
- Building
- School
- Church
- Dam

HYDROLOGY:

- Stream or Body of Water
- Hydro, Pool or Reservoir
- Jurisdictional Stream — JS
- Buffer Zone 1 — BZ 1
- Buffer Zone 2 — BZ 2
- Flow Arrow
- Disappearing Stream
- Spring
- Wetland
- Proposed Lateral, Tail, Head Ditch — FLOW
- False Sump

RAILROADS:

- Standard Gauge — CSX TRANSPORTATION
- RR Signal Milepost — MILEPOST 35
- Switch — SWITCH
- RR Abandoned
- RR Dismantled

RIGHT OF WAY:

- Baseline Control Point
- Existing Right of Way Marker
- Existing Right of Way Line
- Proposed Right of Way Line — RW
- Proposed Right of Way Line with Iron Pin and Cap Marker — RW
- Proposed Right of Way Line with Concrete or Granite Marker — RW
- Existing Control of Access — CA
- Proposed Control of Access — CA
- Existing Easement Line — E
- Proposed Temporary Construction Easement — E
- Proposed Temporary Drainage Easement — TDE
- Proposed Permanent Drainage Easement — PDE
- Proposed Permanent Drainage / Utility Easement — DUE
- Proposed Permanent Utility Easement — PUE
- Proposed Temporary Utility Easement — TUE
- Proposed Aerial Utility Easement — AUE
- Proposed Permanent Easement with Iron Pin and Cap Marker

ROADS AND RELATED FEATURES:

- Existing Edge of Pavement
- Existing Curb
- Proposed Slope Stakes Cut — C
- Proposed Slope Stakes Fill — F
- Proposed Curb Ramp — CR
- Existing Metal Guardrail
- Proposed Guardrail
- Existing Cable Guiderail
- Proposed Cable Guiderail
- Equality Symbol
- Pavement Removal

VEGETATION:

- Single Tree
- Single Shrub
- Hedge
- Woods Line
- Orchard
- Vineyard — Vineyard

EXISTING STRUCTURES:

MAJOR:

- Bridge, Tunnel or Box Culvert — CONC
- Bridge Wing Wall, Head Wall and End Wall — CONC WW

MINOR:

- Head and End Wall — CONC HW
- Pipe Culvert
- Footbridge
- Drainage Box: Catch Basin, DI or JB — CB
- Paved Ditch Gutter
- Storm Sewer Manhole — S
- Storm Sewer — S

UTILITIES:

POWER:

- Existing Power Pole
- Proposed Power Pole
- Existing Joint Use Pole
- Proposed Joint Use Pole
- Power Manhole — P
- Power Line Tower
- Power Transformer
- U/G Power Cable Hand Hole
- H-Frame Pole
- Recorded U/G Power Line — P
- Designated U/G Power Line (S.U.E.*) — P

TELEPHONE:

- Existing Telephone Pole
- Proposed Telephone Pole
- Telephone Manhole — T
- Telephone Booth
- Telephone Pedestal — T
- Telephone Cell Tower
- U/G Telephone Cable Hand Hole — HH
- Recorded U/G Telephone Cable — T
- Designated U/G Telephone Cable (S.U.E.*) — T
- Recorded U/G Telephone Conduit — TC
- Designated U/G Telephone Conduit (S.U.E.*) — TC
- Recorded U/G Fiber Optics Cable — T FO
- Designated U/G Fiber Optics Cable (S.U.E.*) — T FO

WATER:

- Water Manhole — W
- Water Meter
- Water Valve
- Water Hydrant
- Recorded U/G Water Line — W
- Designated U/G Water Line (S.U.E.*) — W
- Above Ground Water Line — A/G Water

TV:

- TV Satellite Dish
- TV Pedestal — C
- TV Tower
- U/G TV Cable Hand Hole — HH
- Recorded U/G TV Cable — TV
- Designated U/G TV Cable (S.U.E.*) — TV
- Recorded U/G Fiber Optic Cable — TV FO
- Designated U/G Fiber Optic Cable (S.U.E.*) — TV FO

GAS:

- Gas Valve
- Gas Meter
- Recorded U/G Gas Line — G
- Designated U/G Gas Line (S.U.E.*) — G
- Above Ground Gas Line — A/G Gas

SANITARY SEWER:

- Sanitary Sewer Manhole
- Sanitary Sewer Cleanout
- U/G Sanitary Sewer Line — SS
- Above Ground Sanitary Sewer — A/G Sanitary Sewer
- Recorded SS Forced Main Line — FSS
- Designated SS Forced Main Line (S.U.E.*) — FSS

MISCELLANEOUS:

- Utility Pole
- Utility Pole with Base
- Utility Located Object
- Utility Traffic Signal Box — S
- Utility Unknown U/G Line — ?UTL
- U/G Tank; Water, Gas, Oil
- Underground Storage Tank, Approx. Loc. — UST
- A/G Tank; Water, Gas, Oil
- Geoenvironmental Boring
- U/G Test Hole (S.U.E.*)
- Abandoned According to Utility Records — AATUR
- End of Information — E.O.I.

04/16/11
7/26/2013 8:30:31 AM
$PENTBLL$
G:\OR Projects\ORI100 - NCDOT Group W\43006I\Roadway\Proj\43006I_RDY_01_IB.dgn

6/2/99

PROJECT REFERENCE NO.	SHEET NO.
17BP.14.R.9	1C
Location and Surveys	

SURVEY CONTROL SHEET 43-0061
-FINAL-

BL

POINT	DESC.	NORTH	EAST	ELEVATION	L STATION	OFFSET
1	BL-1	651231.6820	801277.0640	2879.57	10+79.22	11.29 RT
2	BL-2	651413.1389	801316.3775	2869.03	12+61.41	12.10 RT
3	BL-3	651594.8990	801328.9690	2869.39	14+43.39	10.49 RT

FINAL -L-

TYPE	STATION	NORTH	EAST
POT	10+00.00	651176.8117	801216.5657
PC	10+37.40	651203.9506	801242.2984
PT	11+33.14	651287.3048	801287.0656
PC	11+54.21	651307.8404	801291.8073
PT	11+99.41	651352.4376	801298.8852
PC	12+99.75	651452.3969	801307.6912
PT	13+91.97	651544.3291	801314.9363
POT	14+46.88	651599.1044	801318.7452

BM1 ELEVATION = 2868.77
N 651334 E 801346
BL STATION 6+14.00 46 RIGHT
8" SPIKE SET IN ROOT OF A 36" TWIN
CHESTNUT TREE

-FINAL- ROW MARKER IRON PIN AND CAP-E

ALIGN	STATION	OFFSET	NORTH	EAST
L	11+60.00	-10.50	651315.6684	801282.7873
L	11+60.00	-30.00	651319.7166	801263.7122
L	11+99.41	-30.00	651355.0703	801269.0009
L	13+00.00	-30.00	651455.2742	801277.8285
L	13+00.00	-10.50	651453.5639	801297.2533
L	13+00.00	10.50	651451.7221	801318.1724
L	13+00.00	30.00	651450.0118	801337.5972
L	11+99.41	30.00	651349.8049	801328.7694
L	11+60.00	30.00	651307.2606	801322.4050
L	11+60.00	10.50	651311.3088	801303.3298

-FINAL- PUE MARKER IRON PIN AND CAP-E

ALIGN	STATION	OFFSET	NORTH	EAST
L	11+37.85	10.50	651289.5329	801298.3564
L	11+60.00	21.36	651309.0543	801313.9532
L	13+00.00	23.00	651450.6257	801330.6242
L	13+46.64	18.00	651497.7102	801329.5313
L	13+60.76	15.50	651512.0280	801328.1297
L	14+00.00	15.50	651551.2630	801330.9559
L	14+07.00	12.00	651558.4889	801327.9499
L	14+07.00	10.50	651558.5930	801326.4535

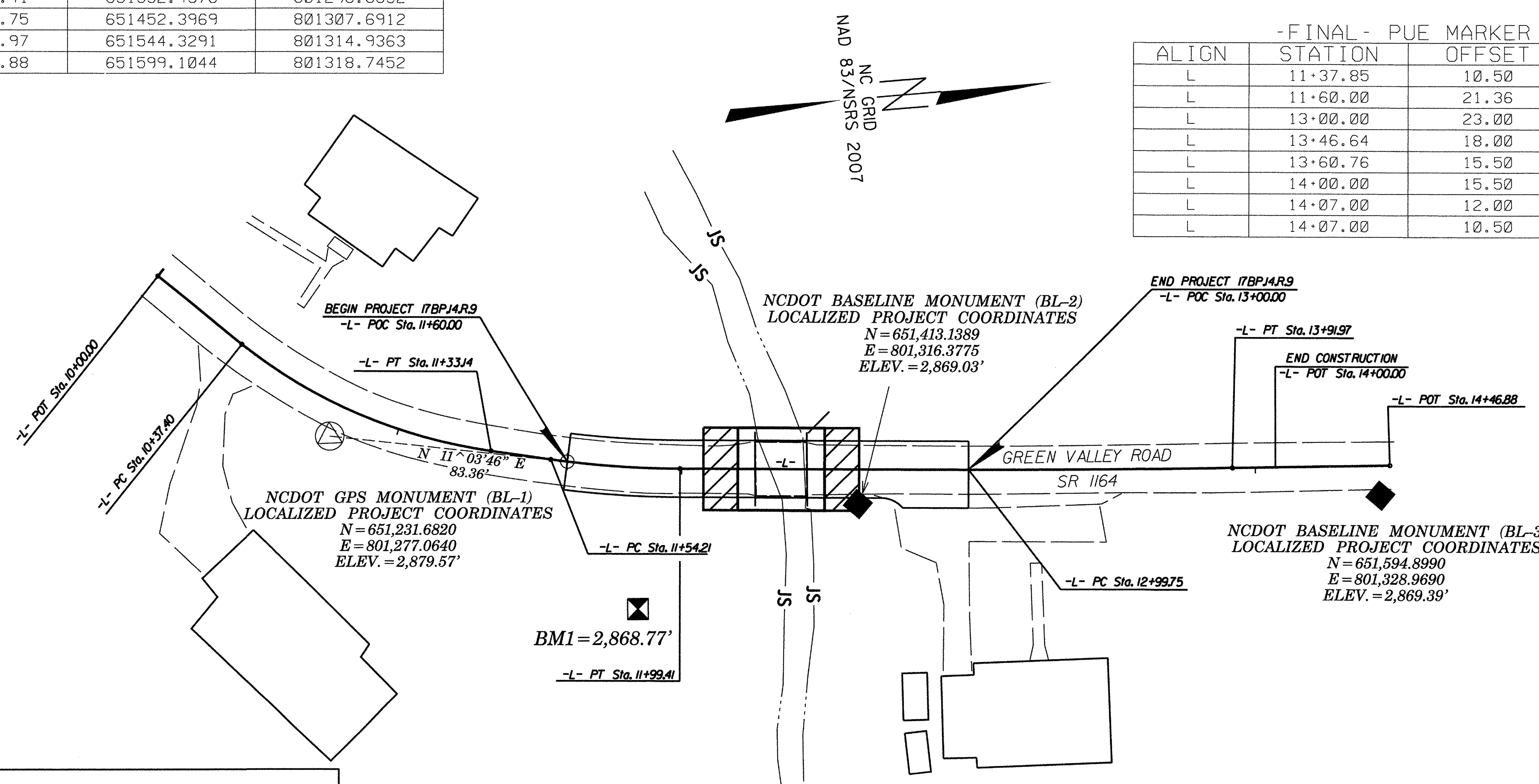

DATUM DESCRIPTION

THE LOCALIZED COORDINATE SYSTEM DEVELOPED FOR THIS PROJECT IS BASED ON THE STATE PLANE COORDINATES ESTABLISHED BY NCDOT FOR MONUMENT "430061 (BL-1)"
WITH NAD 83/NSRS 2007 STATE PLANE GRID COORDINATES OF
NORTHING: 651231.6820(ft) EASTING: 801277.0640(ft)
ELEVATION: 2879.57(ft)
THE AVERAGE COMBINED GRID FACTOR USED ON THIS PROJECT (GROUND TO GRID) IS: 0.99974704
THE N.C. LAMBERT GRID BEARING AND LOCALIZED HORIZONTAL GROUND DISTANCE FROM "430061 (BL-1)" TO -L- STATION 11+60.00 IS
N 11°03′46″ E 83.36′
ALL LINEAR DIMENSIONS ARE LOCALIZED HORIZONTAL DISTANCES
VERTICAL DATUM USED IS NAVD 88

GEOID MODEL - G09NC
NOTE: DRAWING NOT TO SCALE

NOTES:

1. *THE CONTROL DATA FOR THIS PROJECT CAN BE FOUND ELECTRONICALLY BY SELECTING PROJECT CONTROL DATA AT: HTTPS://CONNECT.NCDOT.GOV/RESOURCES/LOCATION/*

   THE FILES TO BE FOUND ARE AS FOLLOWS: 430061_LS_CONTROL.TXT

   SITE CALIBRATION INFORMATION HAS NOT BEEN PROVIDED FOR THIS PROJECT. IF FURTHER INFORMATION IS NEEDED, PLEASE CONTACT THE LOCATION AND SURVEYS UNIT.

△ *INDICATES GEODETIC CONTROL MONUMENTS USED OR SET FOR HORIZONTAL PROJECT CONTROL BY THE NCDOT LOCATION AND SURVEYS UNIT.*

PROJECT CONTROL ESTABLISHED USING GLOBAL POSITIONING SYSTEM.

7/26/2013 8:30:33 AM
$PENTBLL$
G:\OR Projects\ORII00 - NCDOT Group W\430061\Roadway\Proj\430061_RDY_01_1C.dgn

N.T.S

PROJECT REFERENCE NO.	SHEET NO.
17BP.J4.R.9	2
R/W SHEET NO.	
ROADWAY DESIGN ENGINEER	PAVEMENT DESIGN ENGINEER

NORTH CAROLINA PROFESSIONAL SEAL 16003 ENGINEER

REGISTERED ENGINEER

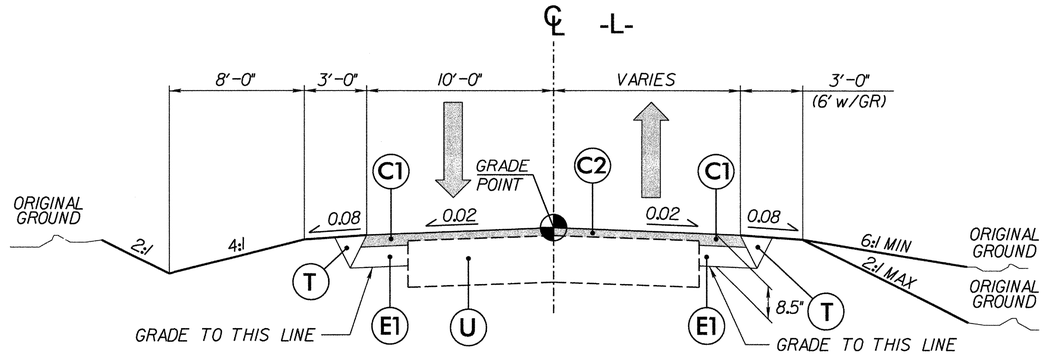

TYPICAL SECTION

-L- STA 11+60.00 TO -L- STA 12+19.56 (BEGIN BRIDGE)
-L- STA 12+49.81 (END BRIDGE) TO -L- STA 13+00.00

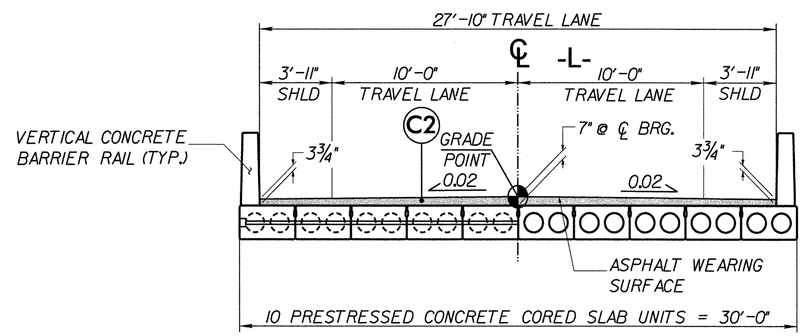

TYPICAL SECTION ON STRUCTURE

-L- STA 12+19.56 (BEGIN BRIDGE) TO -L- STA 12+49.81 (END BRIDGE)

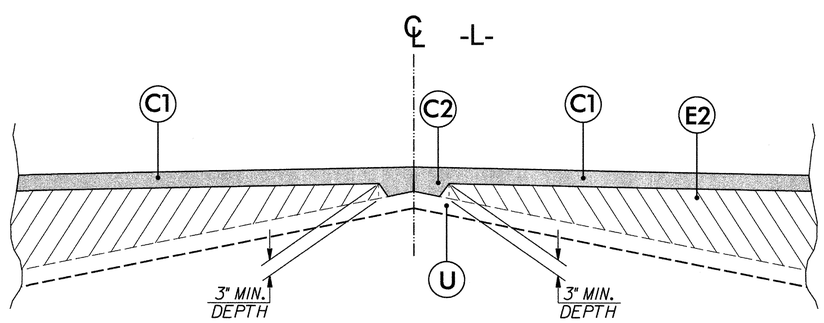

DETAIL SHOWING METHOD OF WEDGING

Note: Pavement edge slopes are 1:1 unless shown otherwise.

PAVEMENT SCHEDULE	
ITEM	DESCRIPTION
C1	Prop. Approx 3.0" Asphalt Concrete Surface Course, Type S9.5B, at an Average Rate of 168 lbs. Per sq. yard in each of two layers.
C2	Prop. Var. Depth Asphalt Concrete Surface Course, Type S9.5B, at an Average Rate of 112 lbs. Per sq. yard Per 1" Depth, to be placed in layers not less than 1.5" or greater than 2" in depth.
E1	Prop. Approx 5.5" Asphalt Concrete Base Course, Type B25.0B, at an Average Rate of 627 lbs. Per sq. yard.
E2	Prop. Var. Depth Asphalt Concrete Base Course, Type B25.0B, at an Average Rate of 114 lbs. Per sq. yard Per 1" Depth, to be placed in layers not less than 4" or greater than 5.5" in depth.
T	Earth Material
U	Existing Pavement
W	Var. Depth Asphalt Pavement

REVISIONS

7/26/2013 8:30:34 AM
G:\OR Projects\OR1100 - NCDOT Group W\430061_Roadway\Proj\430061_RDY_02_TYP.dgn
G:\CADD\Plot\OR1100\1100_rdy.tbl

STATE OF NORTH CAROLINA
DIVISION OF HIGHWAYS

SUMMARY OF QUANTITIES

Line Item	Des	Sec No.	Description	Quantity	Unit
1	0000100000-N	800	MOBILIZATION	1	LS
2	0000400000-N	801	CONSTRUCTION SURVEYING	1	LS
3	0008000000-E	200	SUPPLEMENTARY CLEARING & GRUB-BING	1	ACR
4	0036000000-E	225	UNDERCUT EXCAVATION	50	CY
5	0043000000-N	226	GRADING	1	LS
6	0195000000-E	265	SELECT GRANULAR MATERIAL	50	CY
7	1220000000-E	545	INCIDENTAL STONE BASE	25	TON
8	1489000000-E	610	ASPHALT CONC BASE COURSE, TYPE B25.0B	20	TON
9	1519000000-E	610	ASPHALT CONC SURFACE COURSE, TYPE S9.5B	70	TON
10	1575000000-E	620	ASPHALT BINDER FOR PLANT MIX	6	TON
11	3030000000-E	862	STEEL BM GUARDRAIL	6.25	LF
12	3165000000-N	SP	GUARDRAIL ANCHOR UNITS, TYPE 350 TL-2	3	EA
13	3195000000-N	862	GUARDRAIL ANCHOR UNITS, TYPE AT-1	1	EA
14	3215000000-N	862	GUARDRAIL ANCHOR UNITS, TYPE III	4	EA
15	3569000000-E	867	BARBED WIRE FENCE RESET	80	LF
16	3649000000-E	876	RIP RAP, CLASS B	120	TON
17	3656000000-E	876	GEOTEXTILE FOR DRAINAGE	170	SY
18	4400000000-E	1110	WORK ZONE SIGNS (STATIONARY)	424	SF
19	4410000000-E	1110	WORK ZONE SIGNS (BARRICADE MOUNTED)	94	SF
20	4445000000-E	1145	BARRICADES (TYPE III)	64	LF
21	4450000000-E	1150	FLAGGER	32	HR
22	4810000000-E	1205	PAINT PAVEMENT MARKING LINES (4")	560	LF
23	6000000000-E	1605	TEMPORARY SILT FENCE	390	LF
24	6009000000-E	1610	STONE FOR EROSION CONTROL, CLASS B	60	TON
25	6012000000-E	1610	SEDIMENT CONTROL STONE	20	TON
26	6015000000-E	1615	TEMPORARY MULCHING	0.5	ACR
27	6018000000-E	1620	SEED FOR TEMPORARY SEEDING	50	LB
28	6021000000-E	1620	FERTILIZER FOR TEMPORARY SEEDING	0.25	TON
29	6036000000-E	1631	MATTING FOR EROSION CONTROL	1,300.00	SY
30	6042000000-E	1632	1/4" HARDWARE CLOTH	30.00	LF
31	6071020000-E	SP	POLYACRYLAMIDE (PAM)	25.00	LB
32	6084000000-E	1660	SEEDING & MULCHING	0.5	ACR
33	6090000000-E	1661	SEED FOR REPAIR SEEDING	50	LB
34	6093000000-E	1661	FERTILIZER FOR REPAIR SEEDING	0.25	TON
35	6096000000-E	1662	SEED FOR SUPPLEMENTAL SEEDING	50	LB
36	6108000000-E	1665	FERTILIZER TOPDRESSING	0.25	TON
37	6117000000-N	SP	RESPONSE FOR EROSION CONTROL	9	EA
			STRUCTURES		
38	8035000000-N	402	REMOVAL OF EXISTING STRUCTURE AT STATION -L- 12+34.68	1	LS
39	8121000000-N	412	UNCLASSIFIED STRUCTURE EXCAVA-TION AT STATION -L- 12+34.68	1	LS
40	8182000000-E	420	CLASS A CONCRETE (BRIDGE)	38.8	CY
41	8210000000-N	422	BRIDGE APPROACH SLABS, STATION -L- 13+04.00	1	LS
42	8217000000-E	425	REINFORCING STEEL (BRIDGE)	4,852	LB
43	8364000000-E	450	HP12X53 STEEL PILES	100	LF
44	8391000000-N	450	STEEL PILE POINTS	10	EA
45	8505000000-E	460	VERTICAL CONCRETE BARRIER RAIL	60.3	LF
46	8590000000-E	876	RIP RAP, CLASS II (3'-6" THICK)	151	TON
47	8622000000-E	876	GEOTEXTILE FOR DRAINAGE	90	SY
48	8657000000-N	430	ELASTOMERIC BEARINGS	1	LS
49	8755000000-E	430	3'-0" X 1'-6" PRESTRESSED CONC CORED SLABS	300	LF

REVISIONS

7/26/2013 8:30:36 AM
G:\DR Projects\DR1100 - NCDOT Group W\430061\Roadway\Proj\430061_RDY_03_SOQ.dgn
G:\CADD\Plots\DR1100\1100_rdy.tbl

THE LOUIS BERGER GROUP, Inc.
1001 Wade Avenue, Suite 400
Raleigh, NC 27605-3322

ROADWAY PLANS

PROJECT REFERENCE NO.	SHEET NO.
17BP.14.R.9	3-A
R/W SHEET NO.	
ROADWAY DESIGN ENGINEER	HYDRAULICS ENGINEER
REGISTERED ENGINEER	REGISTERED ENGINEER

NORTH CAROLINA PROFESSIONAL SEAL 16002 ENGINEER JEFFREY D. FIELDS

STATE OF NORTH CAROLINA
DIVISION OF HIGHWAYS

"N" = DISTANCE FROM EDGE OF LANE TO FACE OF GUARDRAIL.
TOTAL SHOULDER WIDTH = DISTANCE FROM EDGE OF TRAVEL LANE TO SHOULDER BREAK POINT.
FLARE LENGTH = DISTANCE FROM LAST SECTION OF PARALLEL GUARDRAIL TO END OF GUARDRAIL.
W = TOTAL WIDTH OF FLARE FROM BEGINNING OF TAPER TO END OF GUARDRAIL.
G = GATING IMPACT ATTENUATOR TYPE 350
NG = NON-GATING IMPACT ATTENUATOR TYPE 350

GUARDRAIL SUMMARY

SURVEY LINE	BEG. STA.	END STA.	LOCATION	LENGTH			WARRANT POINT		"N" DIST. FROM E.O.L.	TOTAL SHOUL. WIDTH	FLARE LENGTH		W		ANCHORS									IMPACT ATTENUATOR TYPE 350			SINGLE FACED GUARDRAIL	REMOVE EXISTING GUARDRAIL	REMOVE AND STOCKPILE EXISTING GUARDRAIL	REMARKS
				STRAIGHT	SHOP CURVED	DOUBLE FACED	APPROACH END	TRAILING END			APPROACH END	TRAILING END	APPROACH END	TRAILING END	XI MOD	XI	GRAU 350 TL-2	M-350	TYPE-III	CAT-1	VI MOD	B-77	AT-1	EA	G	NG				
L	11+75.81	12+19.56	LT	43.75	–	–	–	–	3'	4.45'	–	–	–	–	–	–	1	–	1	–	–	–	–	–	–	–	–	–	–	–
L	11+75.81	12+19.56	RT	43.75	–	–	–	–	3'	4.45'	–	–	–	–	–	–	1	–	1	–	–	–	–	–	–	–	–	–	–	–
L	12+49.81	12+93.56	LT	43.75	–	–	–	–	–	–	–	–	–	–	–	–	1	–	1	–	–	–	–	–	–	–	–	–	–	–
L	12+49.81	12+81.06	RT	25	6.25	–	–	–	–	–	–	–	–	–	–	–	–	–	1	–	–	–	1	–	–	–	–	–	–	–
–	–	–	–	–	–	–	–	–	–	–	–	–	–	–	–	–	–	–	–	–	–	–	–	–	–	–	–	–	–	–
–	–	–	–	–	–	–	–	–	–	–	–	–	–	–	–	–	–	–	–	–	–	–	–	–	–	–	–	–	–	–
			SUB-TOTAL	162.5'											DEDUCTIONS FOR GUARDRAIL ANCHOR UNITS															
		DEDUCTIONS FOR GUARDRAIL ANCHOR UNITS		156.25'											TYPE TL-2			3 @ 25.00' =		75'										
			TOTAL	6.25'											TYPE III			4 @ 18.75' =		75'										
															AT-1			1 @ 6.25' =		6.25'										
																			TOTAL =	156.25'										
			SAY	6.25'																										

SUMMARY OF EARTHWORK (IN CUBIC YARDS)

STATION	STATION	UNCL. EXCAV.	EMBANK. +%	BORROW	WASTE
-L- 11+70.00	12+19.56	27	29	2	0
-L- 12+49.81	13+00.00	15	2	0	13
–	–	–	–	–	–
–	–	–	–	–	–
–	–	–	–	–	–
–	–	–	–	–	–
PROJECT TOTALS:		42	31	2	13
		–	–	–	–
–		–	–	–	–
–		–	–	–	–
–		–	–	–	–
LOSS DUE TO CLEARING & GRUBBING		-5	–	5	–
WASTE TO REPLACE BORROW		–	–	-7	-7
GRAND TOTALS:		37	31	0	6
–		–	–	–	–
SAY:		40	–	–	–

CONTINGENCY ITEMS
UNDERCUT EXCAVATION 50 CY
SELECT GRANULAR MATERIAL 50 CY

Note: Approximate quantities only. Unclassified Excavation, Fine Grading, and Clearing and Grubbing will be paid for at the contract lump sum price for "Grading."

REVISIONS

7/26/2013 8:30:37 AM
G:\OR Projects\OR1100 - NCDOT Group W\430061\Roadway\Proj\430061_RDY_03A_SUMMARY.dgn
G:\CADD\Plots\OR1100\1100_rdy.tbl

THE LOUIS BERGER GROUP, Inc.
1001 Wade Avenue, Suite 400
Raleigh, NC 27605-3322

ROADWAY PLANS

PROJECT REFERENCE NO.	SHEET NO.
17BPJ4.R.9	4
R/W SHEET NO.	

0' 20' 40'

ROADWAY DESIGN ENGINEER — NORTH CAROLINA PROFESSIONAL SEAL 16003 ENGINEER DAVID H. HAMILTON — REGISTERED ENGINEER

HYDRAULICS ENGINEER — NORTH CAROLINA PROFESSIONAL SEAL 20744 ENGINEER DAVID L. SMITH 7/26/13 — REGISTERED ENGINEER

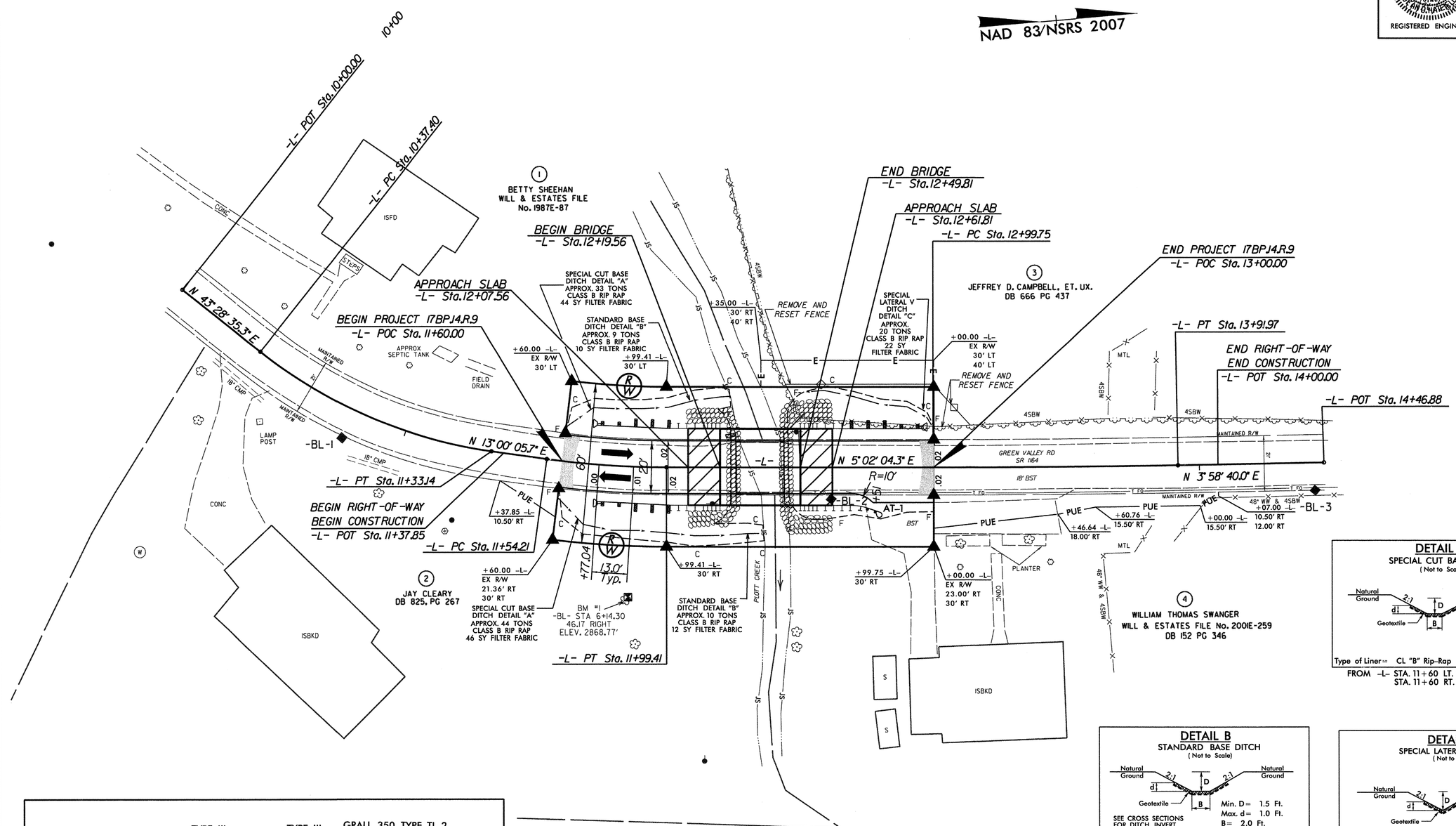

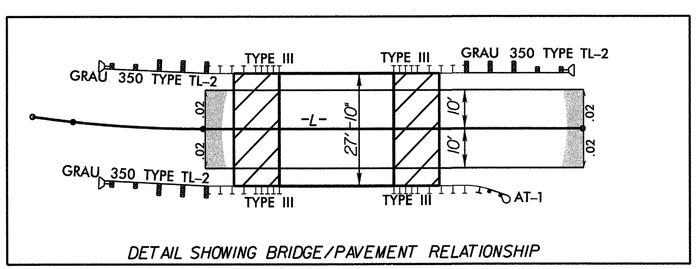

DETAIL SHOWING BRIDGE/PAVEMENT RELATIONSHIP

DETAIL A
SPECIAL CUT BASE DITCH
(Not to Scale)

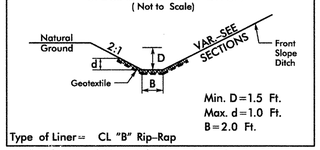

Min. D=1.5 Ft.
Max. d=1.0 Ft.
B=2.0 Ft.

Type of Liner= CL "B" Rip-Rap

FROM -L- STA. 11+60 LT. TO STA. 12+10 LT.
STA. 11+60 RT. TO STA. 12+20 RT.

DETAIL B
STANDARD BASE DITCH
(Not to Scale)

SEE CROSS SECTIONS FOR DITCH INVERT

Min. D= 1.5 Ft.
Max. d= 1.0 Ft.
B= 2.0 Ft.

Type of Liner= CL. B Rip-Rap

FROM -L- STA. 12+10 LT. TO STA. 12+23 LT.
STA. 11+20 RT. TO STA. 12+36 RT.

DETAIL C
SPECIAL LATERAL 'V' DITCH
(Not to Scale)

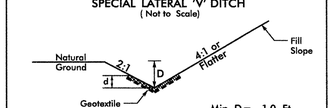

Min. D= 1.0 Ft.
Max. d= 0.5 Ft.

Type of Liner= CL "B" Rip-Rap

FROM -L- STA. 12+38 LT TO STA. 13+00 LT

CURVE DATA FOR -L-

PI Sta 10+86.43	PI Sta 11+76.85	PI Sta 13+45.86
Δ = 30° 28' 29.6" (LT)	Δ = 7° 58' 01.4" (LT)	Δ = 1° 03' 24.3" (LT)
D = 31° 49' 51.6"	D = 17° 37' 46.1"	D = 1° 08' 45.3"
L = 95.74'	L = 45.19'	L = 92.22'
T = 49.03'	T = 22.63'	T = 46.11'
R = 180.00'	R = 325.00'	R = 5,000.00'
Se = EXIST	Se = EXIST	Se = EXIST
RUNOFF = SEE PLANS	RUNOFF = SEE PLANS	RUNOFF = SEE PLANS

SEE SHEET 5 FOR PROFILE
SEE SHEET S-1 - S-13 FOR STRUCTURE PLANS

THE LOUIS BERGER GROUP, Inc.
1001 Wade Avenue, Suite 400
Raleigh, NC 27605-3322

ROADWAY PLANS

REVISIONS

7/26/2013 8:30:40 AM
G:\OR Projects\OR1100 - NCDOT Group W\430061\Roadway\Proj\430061_RDY_04_PSH.dgn
G:\CADD\Plots\OR1100\1100_rdy.tbl

THE LOUIS BERGER GROUP, Inc.
1001 Wade Avenue, Suite 400
Raleigh, North Carolina 27605

PROJECT REFERENCE NO.	SHEET NO.
17BP.14.R.9	5

ROADWAY DESIGN ENGINEER

NORTH CAROLINA PROFESSIONAL SEAL 16002 ENGINEER DEVON A. HABERTH

HYDRAULICS ENGINEER

NORTH CAROLINA PROFESSIONAL SEAL 20744 ENGINEER DAVID L. SMITH 7/26/13

0 20 40 HORIZONTAL

0 10 20 VERTICAL

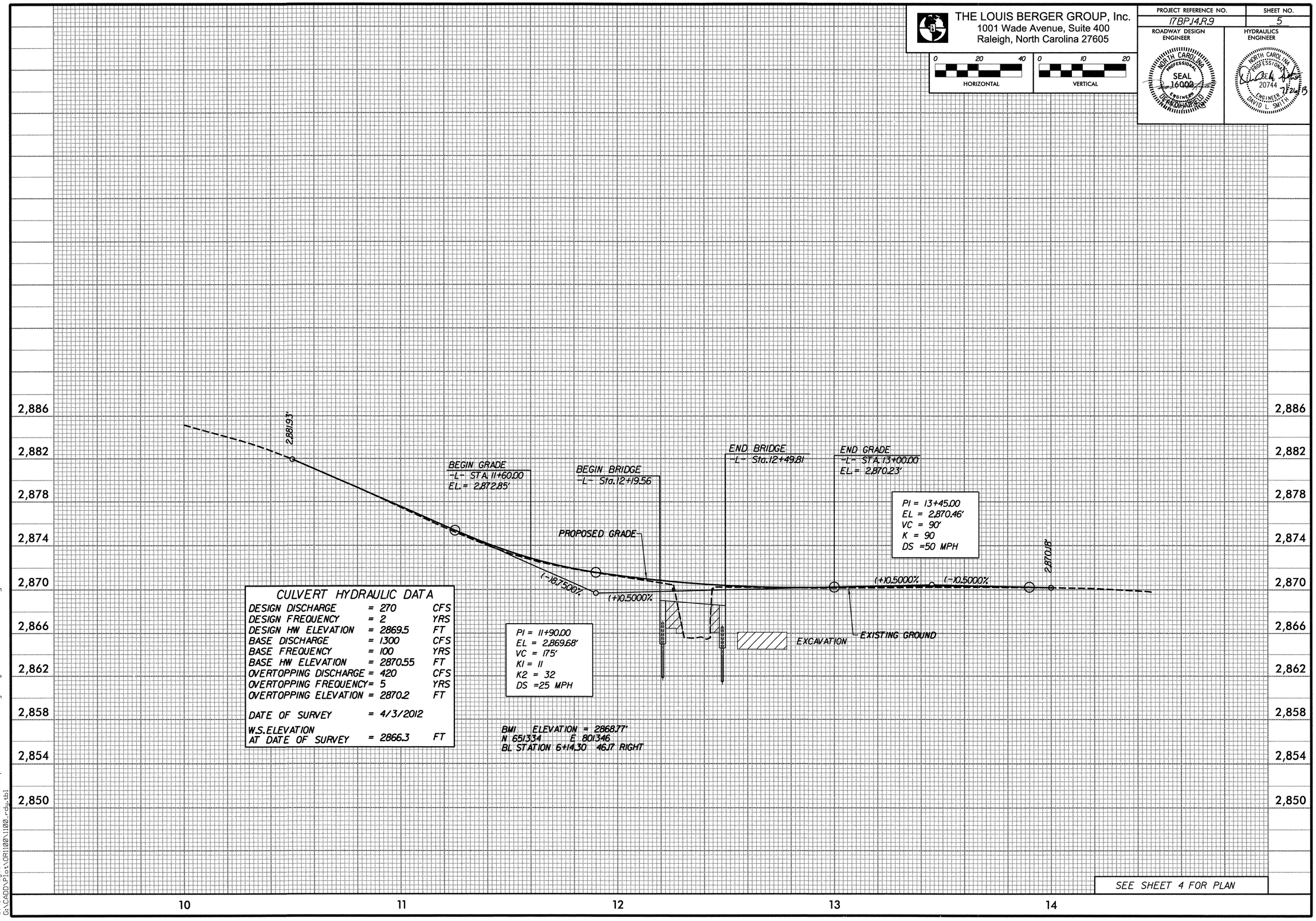

CULVERT HYDRAULIC DATA

DESIGN DISCHARGE	= 270	CFS
DESIGN FREQUENCY	= 2	YRS
DESIGN HW ELEVATION	= 2869.5	FT
BASE DISCHARGE	= 1300	CFS
BASE FREQUENCY	= 100	YRS
BASE HW ELEVATION	= 2870.55	FT
OVERTOPPING DISCHARGE	= 420	CFS
OVERTOPPING FREQUENCY	= 5	YRS
OVERTOPPING ELEVATION	= 2870.2	FT
DATE OF SURVEY	= 4/3/2012	
W.S.ELEVATION AT DATE OF SURVEY	= 2866.3	FT

SEE SHEET 4 FOR PLAN

7/26/2013 8:30:42 AM
G:\DR Projects\DR1100 - NCDOT Group W\430061\Roadway\Proj\430061_RDY_05_PFL.dgn
G:\CADD\Plots\DR1100\1100_rdy.tbl

STATE OF NORTH CAROLINA
DIVISION OF HIGHWAYS

TRANSPORTATION MANAGEMENT PLAN

HAYWOOD COUNTY

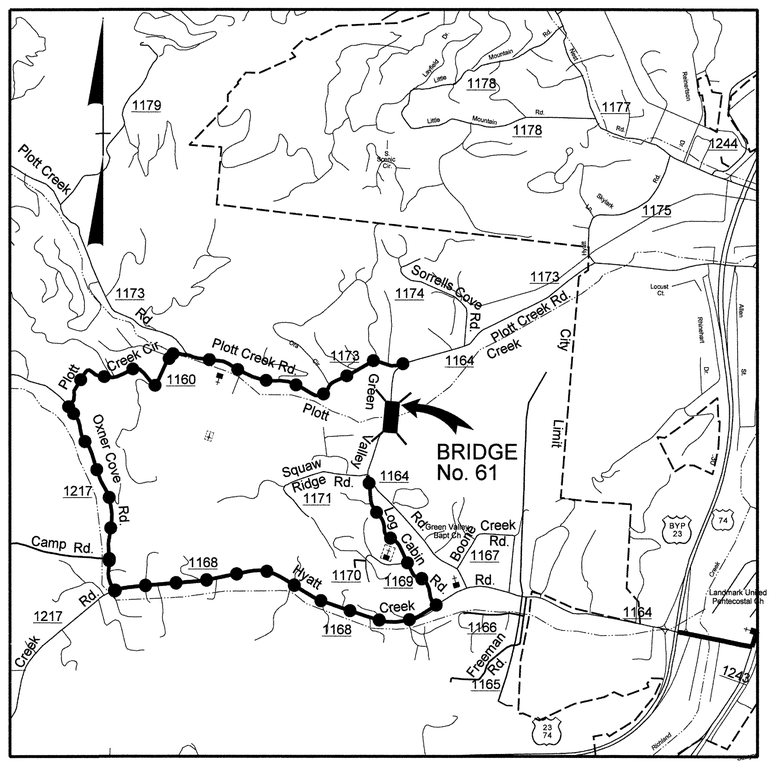

VICINITY MAP *NTS*

OFF-SITE DETOUR

LOCATION: BRIDGE No. 61 ON SR 1164 (GREEN VALLEY RD) OVER PLOTT CREEK

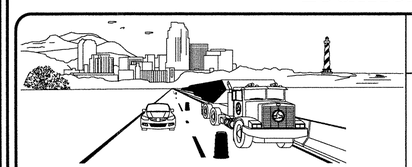

WORK ZONE SAFETY & MOBILITY
"from the MOUNTAINS to the COAST"

N.C.D.O.T. WORK ZONE TRAFFIC CONTROL
1561 MAIL SERVICE CENTER (MSC) RALEIGH, NC 27699-1561
750 N. GREENFIELD PARKWAY, GARNER, NC 27529 (DELIVERY)
PHONE: (919) 773-2800 FAX: (919) 771-2745

J. S. BOURNE, P.E. — *STATE TRAFFIC MANAGEMENT ENGINEER*
D. HATFIELD, P.E. — *TRAFFIC CONTROL PROJECT ENGINEER*
C. WHITE, P. E. — *TRAFFIC CONTROL PROJECT DESIGN ENGINEER*
_____ — *TRAFFIC CONTROL DESIGN ENGINEER*

DIVISION OF HIGHWAYS * STATE OF NORTH CAROLINA * DEPARTMENT OF TRANSPORTATION * WORK ZONE TRAFFIC CONTROL

INDEX OF SHEETS

SHEET NO.	TITLE
TMP-1	TITLE SHEET, AND INDEX OF SHEETS
TMP-1A	LIST OF APPLICABLE ROADWAY STANDARD DRAWINGS, LEGEND, AND TEMPORARY PAVEMENT MARKING
TMP-1B	TRANSPORTATION OPERATIONS PLAN: (MANAGEMENT STRATEGIES AND GENERAL NOTES) AND SPECIAL SIGN DETAIL
TMP-2	TEMPORARY TRAFFIC CONTROL PHASING

THE LOUIS BERGER GROUP, Inc.
1001 Wade Avenue, Suite 400
Raleigh, North Carolina 27605

APPROVED: _____
DATE: _____

SEAL

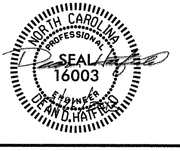

SHEET NO.
TMP-1

PROJECT: 17BP.14.R.9

7/26/2013 8:30:45 AM
G:\OR Projects\OR1100 - NCDOT Group W\430061\Roadway\Proj\430061_RDY_06_TMP1.dgn
G:\CADD\Plot\OR1100\1100_rdy.tbl

PROJ. REFERENCE NO.	SHEET NO.
17BP.14.R.9	TMP-1A

ROADWAY STANDARD DRAWINGS

THE FOLLOWING ROADWAY STANDARDS AS SHOWN IN "ROADWAY STANDARD DRAWINGS" - PROJECT SERVICES UNIT - N.C. DEPARTMENT OF TRANSPORTATION - RALEIGH, N.C., DATED JANUARY 2012 ARE APPLICABLE TO THIS PROJECT AND BY REFERENCE HEREBY ARE CONSIDERED A PART OF THESE PLANS:

STD. NO.	TITLE
1101.01	WORK ZONE WARNING SIGNS
1101.03	TEMPORARY ROAD CLOSURES
1101.05	WORK ZONE VEHICLE ACCESSES
1101.11	TRAFFIC CONTROL DESIGN TABLES
1110.01	STATIONARY WORK ZONE SIGNS
1145.01	BARRICADES
1150.01	FLAGGING DEVICES

LEGEND

GENERAL

DIRECTION OF TRAFFIC FLOW

NORTH ARROW

TRAFFIC CONTROL DEVICES

BARRICADE (TYPE III)

TEMPORARY SIGNING

STATIONARY SIGN

TEMPORARY PAVEMENT MARKING

N/A

APPROVED:_____ DATE:_____

SEAL

NORTH CAROLINA PROFESSIONAL SEAL 16003 ENGINEER DEAN B. HAFIELD

DIVISION OF HIGHWAYS STATE OF NORTH CAROLINA DEPARTMENT OF TRANSPORTATION WORK ZONE TRAFFIC CONTROL SEAL

ROADWAY STANDARD DRAWINGS & LEGEND

7/26/2013 8:30:53 AM
G:\DR Projects\DR1100 - NCDOT Group W\430061\Roadway\Proj\430061_RDY_06_TMP1A.dgn
1100_rdy_pmp.tbl

PROJ. REFERENCE NO.	SHEET NO.
17BP.14.R.9	TMP-1B

MANAGEMENT STRATEGIES

TRAFFIC WILL BE DETOURED OFFSITE DURING CONSTRUCTION ALONG A ROUTE DETERMINED BY NCDOT.

THE OFFSITE DETOUR WILL INCLUDE 1169 (LOG CABIN RD), SR 1168 (HYATT CREEK RD), SR 1217 (OXNER COVE RD), SR 1160 (PLOTT CREEK CIR) AND SR 1173 (PLOTT CREEK RD). SEE SHEET TMP-2)

TRAFFIC SHALL BE MAINTAINED TO THE EXISTING DRIVEWAY WITHIN THE PROJECT LIMITS AT ALL TIMES.

PROJECT PHASING

STEP 1:
- INSTALL OFF SITE DETOUR AND ROAD CLOSURE SIGNING (PROVIDED BY CONTRACTOR).

- USING RDWY STD 1101.03, SHEET 1 OF 9, CLOSE SR 1164 (GREEN VALLEY RD.) TO THRU TRAFFIC FROM -L- STA. 11+60+/- TO -L- STA. 13+00+/- AND PLACE TRAFFIC ONTO OFF SITE DETOUR AS SHOWN ABOVE. MAINTAIN ACCESS TO EXIST. DRIVEWAY WITHIN PROJECT LIMITS AT ALL TIMES.

STEP 2:
- REMOVE EXISTING BRIDGE No. 61 AND APPROACHES AND CONSTRUCT THE PROPOSED STRUCTURE AND ROADWAY UP TO BUT NOT INCLUDING THE FINAL LAYER OF SURFACE COURSE FROM -L- STA. 11+60+/- TO -L- STA. 13+00+/-.

- USING FLAGGERS (RDWY STD 1101.02, SHEET 1 OF 15), CONSTRUCT WIDENING FROM -L- STA. 11+60+/- TO -L- STA. 13+00+/- AND PLACE FINAL LAYER OF SURFACE COURSE AND FINAL PAVEMENT MARKINGS FROM -L- STA. 11+60+/- TO -L- STA. 13+00+/-. (SEE CONSTRUCTION AND PAVEMENT MARKING PLANS)

STEP 3:
- REMOVE ALL TRAFFIC CONTROL DEVICES, SIGNING AND DETOUR ROUTE SIGNING.

- OPEN TO FINAL TRAFFIC PATTERN.

SPECIAL SIGN DETAIL

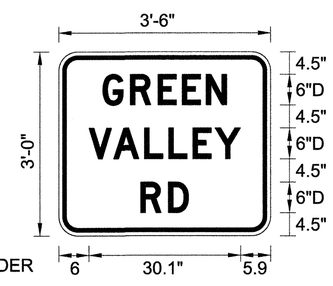

BORDER
R=3"
TH=0.75"
IN=0.75"
BLACK ON FLOURESCENT ORANGE

LETTER POSITIONS

8.7	G 5.5	R 5.5	E 4.7	E 4.8	N 4.1	8.7

6	V 4.9	A 6.1	L 4.8	L 4.8	E 4.4	Y 5.1	5.9

16.2	R 5.5	D 4	16.3

NOTE:

1. LETTER SPACINGS ARE TO START OF NEXT LETTER.
2. LEGEND AND BORDER SHALL BE DIRECT APPLIED BLACK NON-REFLECTIVE SHEETING.
3. BACKGROUND SHALL BE TYPE VII, VIII, OR IX (PRISMATIC) FLOURESCENT ORANGE RETROREFLECTIVE SHEETING.

GENERAL NOTES / LOCAL NOTES

CHANGES MAY BE REQUIRED WHEN PHYSICAL DIMENSIONS IN THE DETAIL DRAWINGS, STANDARD DETAILS, AND ROADWAY DETAILS ARE NOT ATTAINABLE TO MEET FIELD CONDITIONS OR RESULT IN DUPLICATE OR UNDESIRED OVERLAPPING OF DEVICES. MODIFICATION MAY INCLUDE: MOVING, SUPPLEMENTING, COVERING, OR REMOVAL OF DEVICES AS DIRECTED BY THE ENGINEER.

THE FOLLOWING GENERAL NOTES APPLY AT ALL TIMES FOR THE DURATION OF THE CONSTRUCTION PROJECT EXCEPT WHEN OTHERWISE NOTED IN THE PLAN OR DIRECTED BY THE ENGINEER.

PAVEMENT EDGE DROP OFF REQUIREMENTS

A) BACKFILL AT A 6:1 SLOPE UP TO THE EDGE AND ELEVATION OF EXISTING PAVEMENT IN AREAS ADJACENT TO AN OPENED TRAVEL LANE THAT HAS AN EDGE OF PAVEMENT DROP-OFF AS FOLLOWS:

BACKFILL DROP-OFFS THAT EXCEED 2 INCHES ON ROADWAYS WITH POSTED SPEED LIMITS OF 45 MPH OR GREATER.

BACKFILL DROP-OFFS THAT EXCEED 3 INCHES ON ROADWAYS WITH POSTED SPEED LIMITS LESS THAN 45 MPH.

BACKFILL WITH SUITABLE COMPACTED MATERIAL, AS APPROVED BY THE ENGINEER, AT NO EXPENSE TO THE DEPARTMENT.

TRAFFIC PATTERN ALTERATIONS

B) NOTIFY THE ENGINEER TWENTY ONE (21) CALENDAR DAYS PRIOR TO ANY TRAFFIC PATTERN ALTERATION.

SIGNING

C) PROVIDE SIGNING AND DEVICES REQUIRED TO CLOSE THE ROAD ACCORDING TO THE ROADWAY STANDARD DRAWINGS AND TRAFFIC CONTROL PLANS.

PROVIDE SIGNING REQUIRED FOR THE OFF-SITE DETOUR ROUTE AS SHOWN IN THE TRAFFIC CONTROL PLANS.

D) COVER OR REMOVE ALL SIGNS AND DEVICES REQUIRED TO CLOSE THE ROAD WHEN ROAD CLOSURE IS NOT IN OPERATION.

COVER OR REMOVE ALL SIGNS REQUIRED FOR THE OFF-SITE DETOUR WHEN THE DETOUR IS NOT IN OPERATION.

E) ENSURE ALL NECESSARY SIGNING IS IN PLACE PRIOR TO ALTERING ANY TRAFFIC PATTERN.

TRAFFIC CONTROL DEVICES

F) PLACE TYPE III BARRICADES, WITH "ROAD CLOSED" SIGN R11-2 ATTACHED, OF SUFFICIENT LENGTH TO CLOSE ENTIRE ROADWAY.

APPROVED:_____ DATE:_____

SEAL

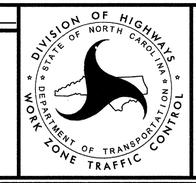

TRANSPORTATION OPERATIONS PLAN

7/26/2013 8:31:00 AM
G:\OR Projects\OR11100 - NCDOT Group W\430061\Roadway\Proj\430061_RDY_06_TMP1B.dgn
11100_rdy_pmp.tbl

PROJ. REFERENCE NO.	SHEET NO.
17BP.14.R.9	TMP-2

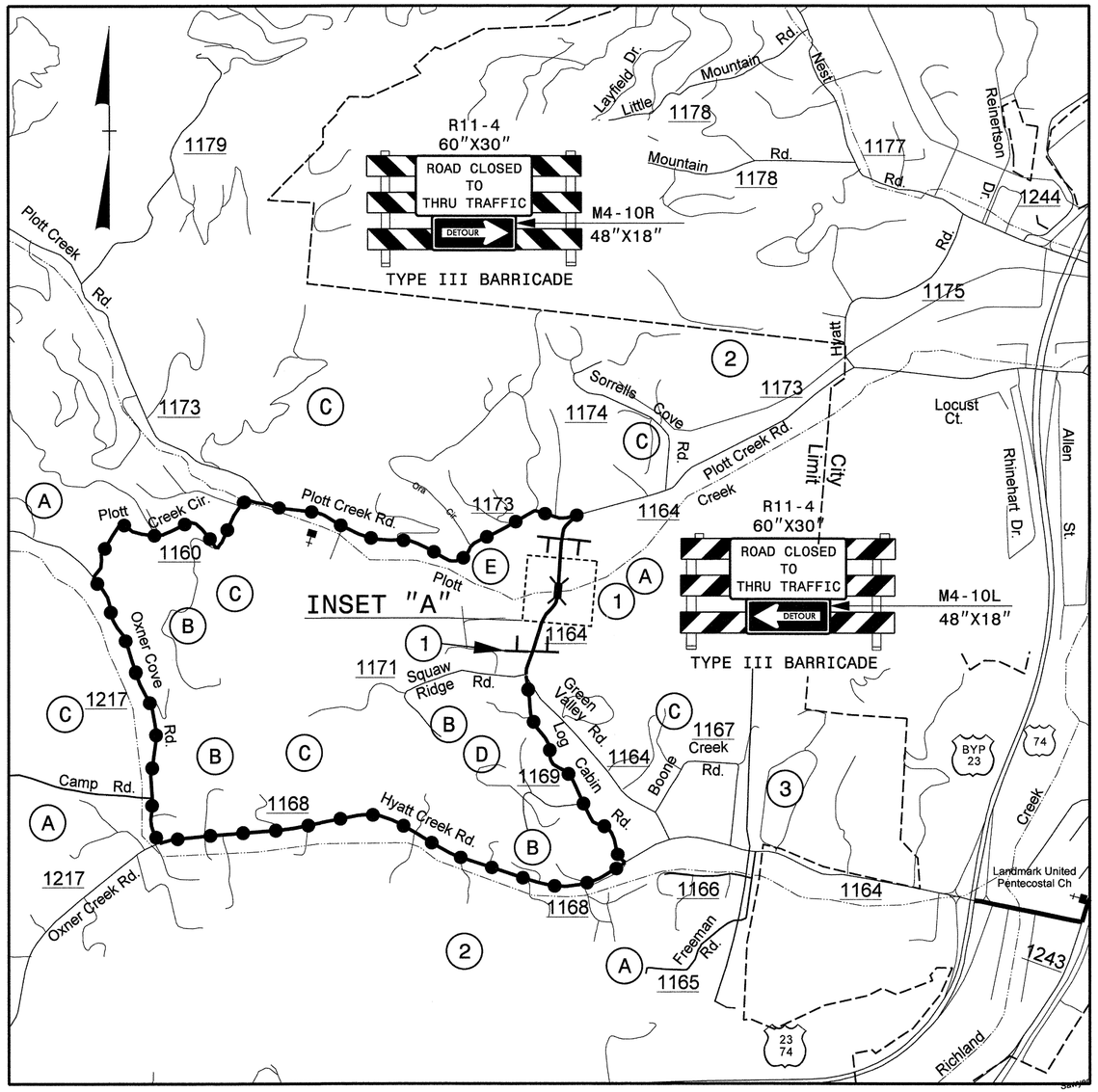

VICINITY MAP *NTS*

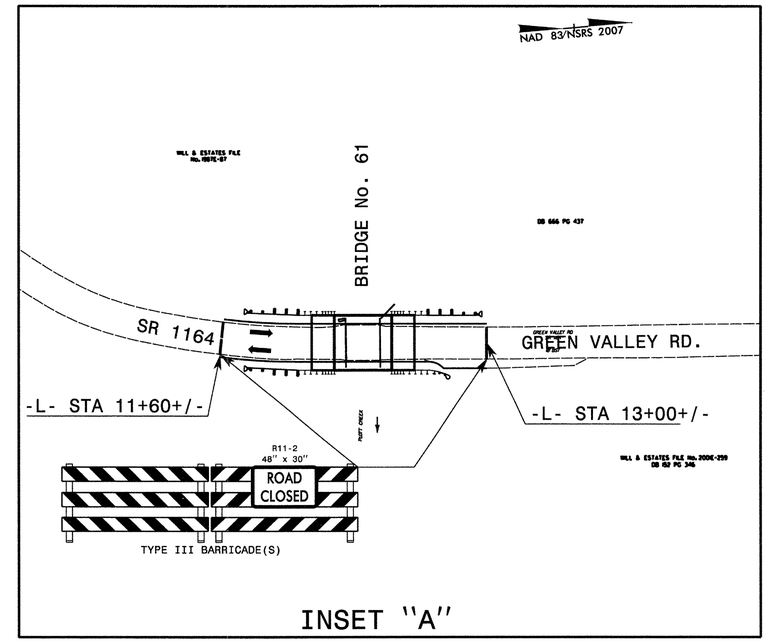

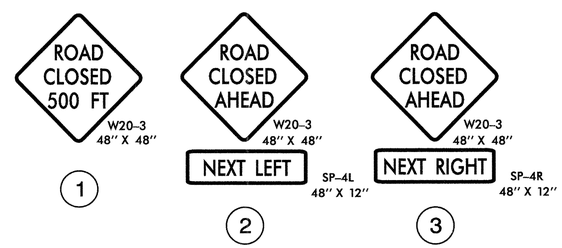

NOTES:

- FOR CONSTRUCTION PHASING NOTES, SEE SHEET TMP-1B.
- ALL DETOUR SIGN LOCATIONS ARE APPROXIMATE. FOR SIGNS 1-3, SEE ROADWAY STANDARD DRAWING NO. 1101.03, SHEET 1 OF 9 FOR SIGN PLACEMENT AND APPLICABLE NOTES.
- ALL DETOUR SIGNS ARE BLACK ON ORANGE UNLESS OTHERWISE NOTED.

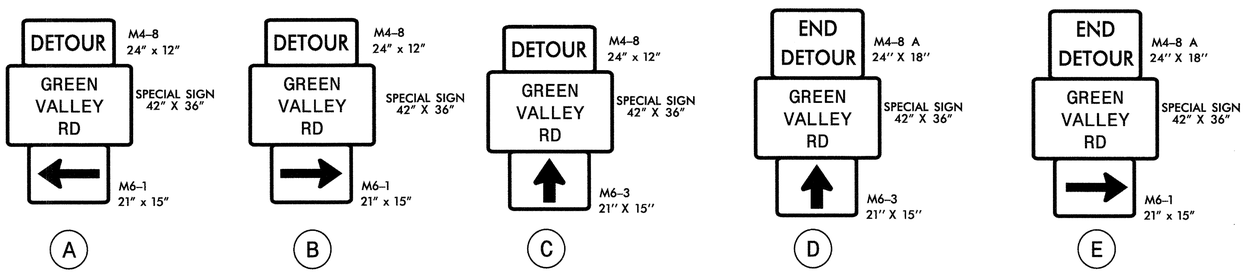

THE LOUIS BERGER GROUP, Inc.
1001 Wade Avenue, Suite 400
Raleigh, North Carolina 27605

APPROVED: _____ DATE: _____

SEAL

NORTH CAROLINA PROFESSIONAL SEAL 16003 ENGINEER DENNIS L. HAYNES

DIVISION OF HIGHWAYS · STATE OF NORTH CAROLINA · DEPARTMENT OF TRANSPORTATION · WORK ZONE TRAFFIC CONTROL

TEMPORARY TRAFFIC CONTROL PHASING

7/26/2013 8:31:08 AM
G:\DR Projects\VDR1100 - NCDOT Group W\430061\Roadway\Proj\430061_RDY_06_TMP2.dgn
1100_rdy_pmp.tbl

STATE	PROJECT NO.	SHEET NO.	TOTAL SHTS.
N.C.	17BP.14.R.9	PMP-1	2

APPROVED: _____

DATE: _____

SEAL

NORTH CAROLINA PROFESSIONAL SEAL 16003 ENGINEER DEAN A. HOKELID 7/26/2013

STATE OF NORTH CAROLINA
DEPARTMENT OF TRANSPORTATION

PAVEMENT MARKING PLANS

LOCATION: BRIDGE NO. 61 ON SR 1164 (GREEN VALLEY RD) OVER PLOTT CREEK

ROADWAY STANDARD DRAWINGS

THE FOLLOWING ROADWAY STANDARDS AS APPEAR IN "ROADWAY STANDARD DRAWINGS"-ROADWAY DESIGN UNIT-N.C. DEPARTMENT OF TRANSPORTATION-RALEIGH, N.C., DATED JANUARY 2012 ARE APPLICABLE TO THIS PROJECT AND BY REFERENCE HEREBY ARE CONSIDERED A PART OF THESE PLANS:

STD. NO.	TITLE
1205.01	PAVEMENT MARKINGS - LINE TYPES & OFFSETS
1205.02	PAVEMENT MARKINGS - 2 LANE & MULTILANE ROADWAYS
1205.12	PAVEMENT MARKINGS - BRIDGES
1261.01	GUARDRAIL AND BARRIER DELINATION SPACING
1261.02	GUARDRAIL AND BARRIER DELINATION TYPES
1262.02	GUARDRAIL END DELINATION

PAVEMENT MARKING SCHEDULE

ASPHALT PAVEMENT DESIGN
(AS SHOWN)

PAVEMENT MARKING LINES

PA - PAINT - WHITE EDGELINE (4")
PI - PAINT - YELLOW DOUBLE CENTER LINE (4")

GENERAL NOTES

THE FOLLOWING NOTES APPLY AT ALL TIMES FOR THE DURATION OF THE CONSTRUCTION PROJECT, EXCEPT WHEN NOTED IN THE PLAN, OR DIRECTED BY THE ENGINEER.

A) INSTALL PAVEMENT MARKINGS AND PAVEMENT MARKERS ON THE FINAL SURFACE AS FOLLOWS:

ASPHALT PAVEMENT DESIGN:

ROAD NAME	MARKING	MARKER
ALL	PAINT	NONE
BRIDGE	PAINT	NONE

B) TIE PROPOSED PAVEMENT MARKING LINES TO EXISTING PAVEMENT MARKING LINES.

C) REMOVE/ REPLACE ANY CONFLICTING/ DAMAGED PAVEMENT MARKINGS AND MARKERS.

D) PASSING ZONES WILL BE DETERMINED IN THE FIELD AND MUST BE APPROVED BY THE ENGINEER.

INDEX

SHEET NO.	DESCRIPTION
PMP-1	PAVEMENT MARKING PLAN COVER SHEET
PMP-2	PAVEMENT MARKING DETAIL

THE LOUIS BERGER GROUP, Inc.
1001 Wade Avenue, Suite 400
Raleigh, NC 27605-3322

ROADWAY PLANS

7/26/2013 8:31:16 AM
G:\OR Projects\OR1100 - NCDOT Group W\430061\Roadway\Proj\430061_RDY_07_PMP_01.dgn
1100_rdy-pmp.tbl

STATE	PROJECT NO.	SHEET NO.	TOTAL SHTS.
N.C.	17BP.14.R.9	PMP-2	2

0' 20' 40'

APPROVED: _____

DATE: _____

SEAL

NORTH CAROLINA PROFESSIONAL SEAL 16003 ENGINEER DEAN A. HOFFIELD 7/26/2013

NAD 83/NSRS 2007

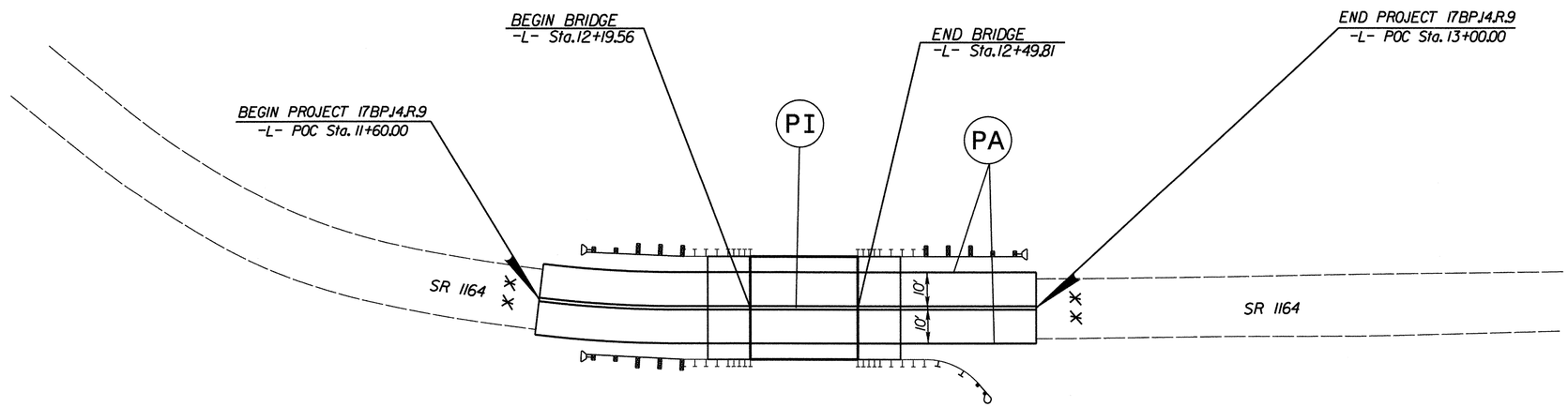

TIE TO EXISTING PAVEMENT MARKINGS

LEGEND

PA - PAINT - WHITE EDGELINE (4")

PI - PAINT - YELLOW DOUBLE CENTER LINE (4")

PAVEMENT MARKING DETAIL
GREEN VALLEY RD

THE LOUIS BERGER GROUP, Inc.
1001 Wade Avenue, Suite 400
Raleigh, NC 27605-3322

ROADWAY PLANS

7/26/2013 8:31:24 AM
G:\OR Projects\OR1100 - NCDOT Group W\4300661\Roadway\Proj\4300661_RDY_07_PMP_02.dgn
1100_rdy-pmp.tbl

0' 20' 40'	PROJECT REFERENCE NO.	SHEET NO.
	17BP.14.R.9	EC-01/CONST.04
	R/W SHEET NO.	

EROSION CONTROL PLANS

Environmentally Sensitive Areas:

This project is located in an "Environmentally Sensitive Area." This designation requires special procedures to be used for clearing and grubbing, temporary stream crossings, and grading operations within the area identified on the plans. This also requires special procedures to be used for seeding and mulching and staged seeding within the project.

Clearing and Grubbing:

In areas identified on the erosion control plans as "Environmentally Sensitive Areas", the Contractor may perform clearing operations, but not grubbing operations until immediately prior to beginning grading operations as described in Section 200, Article 200-1, in the Standard Specifications. The "Environmentally Sensitive Area" shall be defined as a 50 foot buffer zone on both sides of the stream (or depression), measured from top of streambank, (or center of depression). Only clearing operations (not grubbing) shall be allowed in this buffer zone until immediately prior to beginning grading operations. Erosion control devices shall be installed immediately following the clearing operation.

Grading:

Once grading operations begin in identified "Environmentally Sensitive Areas", work will progress in a continuous manner until complete. All construction within these areas must progress in a continuous manner such that each phase is complete and areas permanently stabilized prior to beginning of next phase. Failure on the part of the Contractor to complete any phase of construction in a continuous manner in "Environmentally Sensitive Areas" as specified will be just cause for the Engineer to direct the suspension of work in accordance with Section 108-7 of the Standard Specifications.

Temporary Stream Crossings:

Any crossing of streams within the limits of this project must be accomplished in accordance with Section 107-13(b) of the Standard Specifications.

Seeding and Mulching:

Seeding and mulching shall be performed in accordance with Section 1660 of the Standard Specifications and vegetative cover sufficient to restrain erosion shall be installed immediately following grade establishment.

Seeding and mulching shall be performed on the areas disturbed by construction immediately following final grade establishment. No appreciable time shall lapse into the contract time without stabilization of slopes, ditches and other areas within the "Environmentally Sensitive Areas" as indicated on the erosion control plans.

Stage Seeding:

The work covered by this section shall consist of the establishment of a vegetative cover on cut and fill slopes as grading progresses. Seeding and mulching shall be done in stages on cut and fill slopes which are greater than 20 feet in height measured along the slope, or greater than 2 acres in area. Each stage shall not exceed the limits stated above.

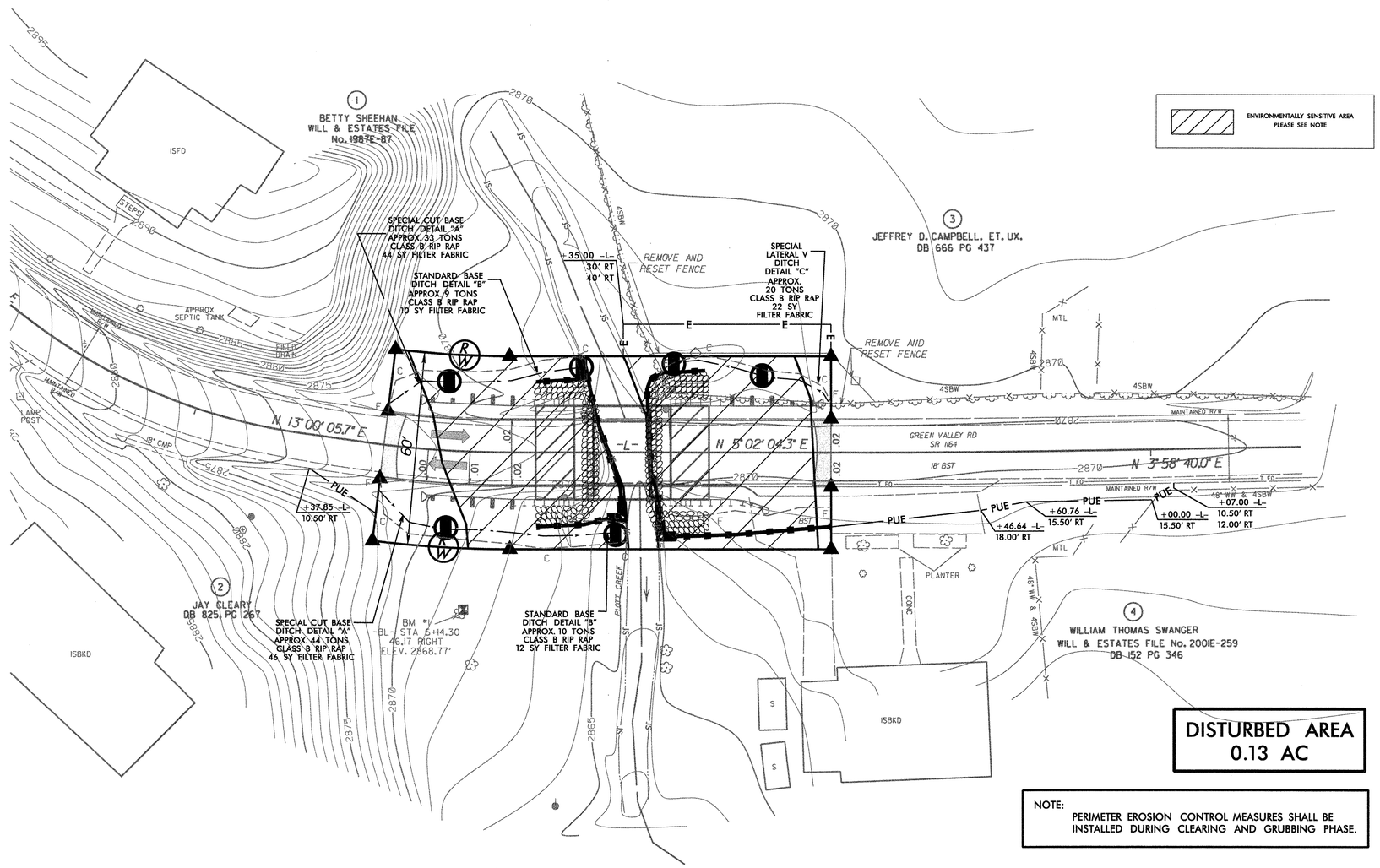

DISTURBED AREA
0.13 AC

NOTE:
PERIMETER EROSION CONTROL MEASURES SHALL BE INSTALLED DURING CLEARING AND GRUBBING PHASE.

David L. Smith, PE
LEVEL III : Designer of Erosion and Sediment Control Plans
Certification Number: 590

Std. #	Description	Symbol
1605.01	Temporary Silt Fence	
1606.01	Special Sediment Control Fence	
	Temporary Rock Silt Check Type-A with Matting and Polyacrylamide (PAM)	

NOTE: ANY DEVIATION FROM OPTIONS GIVEN WILL REQUIRE PRIOR APPROVAL BY ENGINEER.

ADDITIONAL EROSION CONTROL DEVICES MAY NEED TO BE INSTALLED AS DIRECTED BY THE ENGINEER.

2012 STANDARD DRAWINGS

1604.01	Railroad Erosion Control Detail	1632.01	Rock Inlet Sediment Trap Type A
1605.01	Temporary Silt Fence	1632.02	Rock Inlet Sediment Trap Type B
1606.01	Special Sediment Control Fence	1632.03	Rock Inlet Sediment Trap Type C
1607.01	Gravel Construction Entrance	1633.01	Temporary Rock Silt Check Type A
1622.01	Temporary Berms and Slope Drains	1633.02	Temporary Rock Silt Check Type B
1630.01	Riser Basin	1634.01	Temporary Rock Sediment Dam Type A
1630.02	Silt Basin Type B	1634.02	Temporary Rock Sediment Dam Type B
1630.03	Temporary Silt Ditch	1635.01	Rock Pipe Inlet Sediment Trap Type A
1630.04	Stilling Basin	1635.02	Rock Pipe Inlet Sediment Trap Type B
1630.05	Temporary Diversion	1640.01	Coir Fiber Baffle
1630.06	Special Stilling Basin	1645.01	Temporary Stream Crossing
1631.01	Matting Installation		

ROADSIDE ENVIRONMENTAL UNIT
DEPARTMENT OF TRANSPORTATION
DIVISION OF HIGHWAYS
RALEIGH, N.C.

2012 STANDARD SPECIFICATIONS

SEE SHEET 5 FOR PROFILE

THE LOUIS BERGER GROUP, Inc.
1001 Wade Avenue, Suite 400
Raleigh, NC 27605-3322

ROADWAY PLANS

REVISIONS

7/26/2013 8:31:28 AM
G:\OR Projects\OR1100 - NCDOT Group W\430061\Roadway\Proj\430061_RDY_08_EC_01.dgn
G:\CADD\Plots\OR1100\1100_rdy_EC.tbl

PROJECT REFERENCE NO.	SHEET NO.
17BPJ4.R.9	EC-2
R/W SHEET NO.	

TEMPORARY ROCK SILT CHECK TYPE 'A' WITH EXCELSIOR MATTING AND POLYACRYLAMIDE (PAM)

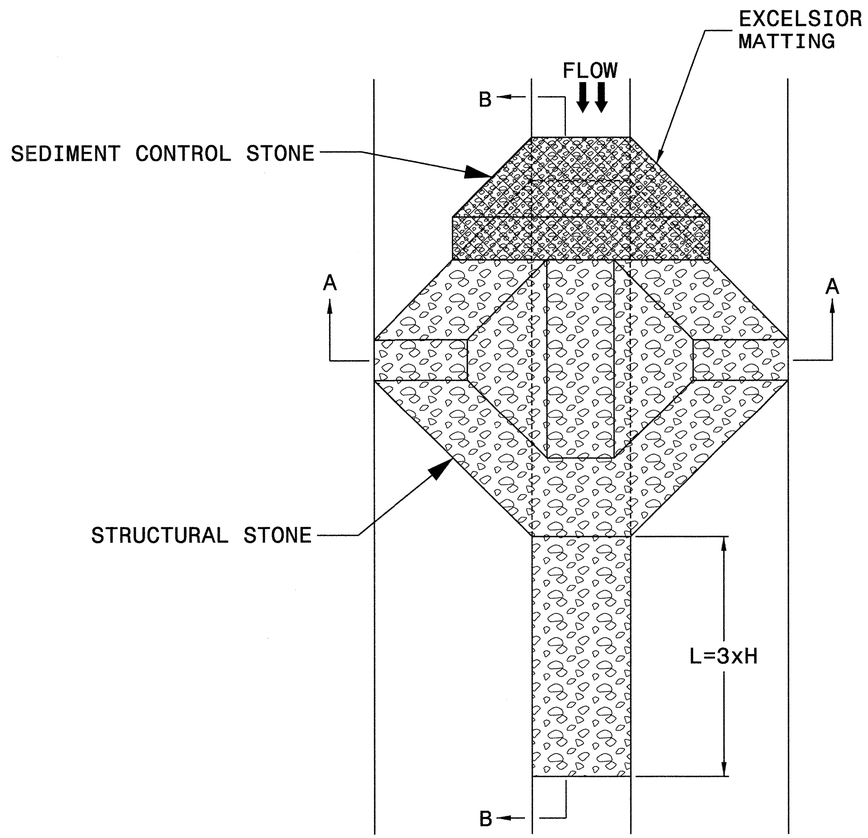

PLAN

NOTES

USE EXCELSIOR FOR MATTING MATERIAL AND ANCHOR MATTING SECTION AT TOP AND BOTTOM WITH CLASS B STONE.

PRIOR TO POLYACRYLAMIDE (PAM) APPLICATION, OBTAIN A SOIL SAMPLE FROM PROJECT LOCATION, AND FROM OFFSITE MATERIAL, AND ANALYZE FOR APPROPRIATE PAM FLOCCULANT TO BE APPLIED TO EACH ROCK SILT CHECK.

INITIALLY APPLY 3.5 OUNCES OF POLYACRYLAMIDE (PAM) TO TOP OF MATTING SECTION AND AFTER EVERY RAINFALL EVENT THAT EQUALS OR EXCEEDS 0.50 INCHES.

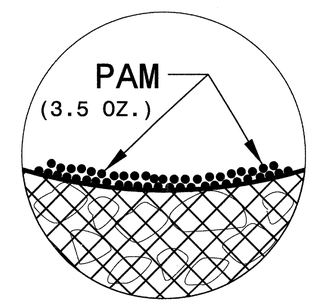

INSET A

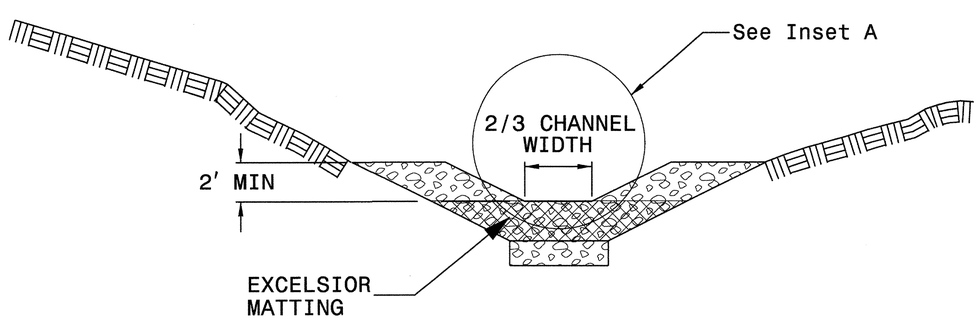

SECTION A-A

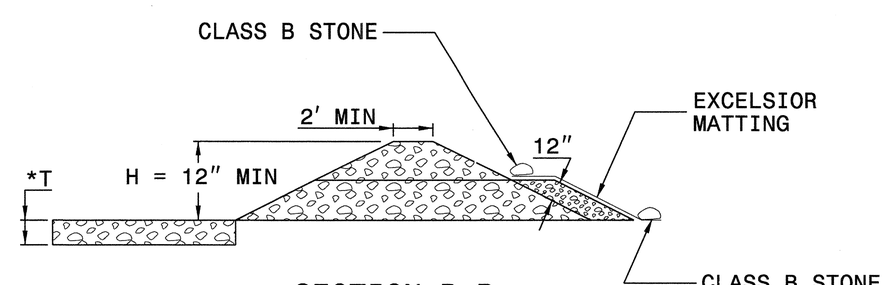

SECTION B-B

*T = 12" MIN., 18" MAX.

NOT TO SCALE

THE LOUIS BERGER GROUP, Inc.
1001 Wade Avenue, Suite 400
Raleigh, NC 27605-3322

ROADWAY PLANS

REVISIONS

7/26/2013 8:31:31 AM
G:\OR Projects\ORI100 - NCDOT Group VV\430061\Roadway\Proj\430061_RDY_08_EC_02.dgn
G:\CADD\Plot\ORI100\1100_rdy_EC.tbl

STATE OF NORTH CAROLINA
DIVISION OF HIGHWAYS

SOIL STABILIZATION TIMEFRAMES

SITE DESCRIPTION	STABILIZATION TIME	TIMEFRAME EXCEPTIONS
PERIMETER DIKES, SWALES, DITCHES AND SLOPES	7 DAYS	NONE
HIGH QUALITY WATER (HOW) ZONES	7 DAYS	NONE
SLOPES STEEPER THAN 3:1	7 DAYS	IF SLOPES ARE 10' OR LESS IN LENGTH AND ARE NOT STEEPER THAN 2:1, 14 DAYS ARE ALLOWED.
SLOPES 3:1 OR FLATTER	14 DAYS	7 DAYS FOR SLOPES GREATER THAN 50' IN LENGTH.
ALL OTHER AREAS WITH SLOPES FLATTER THAN 4:1	14 DAYS	NONE, EXCEPT FOR PERIMETERS AND HOW ZONES.

REVISIONS

7/26/2013 8:31:32 AM
G:\OR Projects\OR1100 - NCDOT Group W\430061\Roadway\Proj\430061_RDY_08_EC_03.dgn
G:\CADD\Plots\OR1100\1100_rdy.tbl

THE LOUIS BERGER GROUP, Inc.
1001 Wade Avenue, Suite 400
Raleigh, NC 27605-3322

ROADWAY PLANS

TIP PROJECT: 17BP.14.R.9

T.I.P. NO.	SHEET NO.
17BP.14.R.9	UO-1

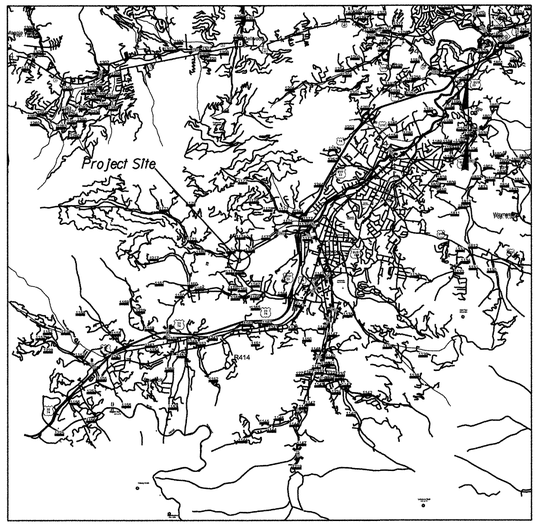

Vicinity Map

STATE OF NORTH CAROLINA
DIVISION OF HIGHWAYS

UTILITIES BY OTHERS PLANS
HAYWOOD COUNTY

LOCATION: BRIDGE NO. 430061 ON SR 1164 GREEN VALLEY ROAD OVER PLOTT CREEK

TYPE OF WORK: AERIAL POWER AND TELEPHONE UTILITES

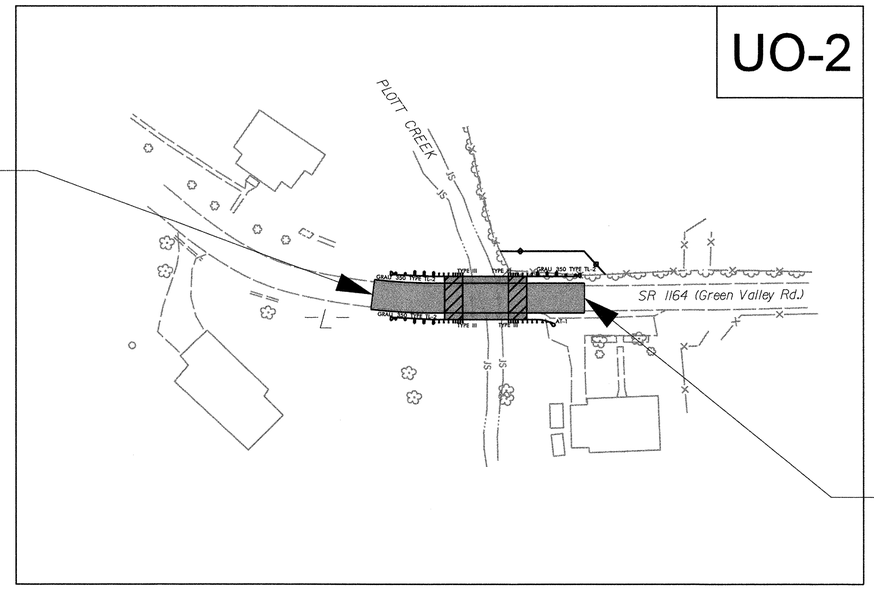

NAD 83

BEGIN PROJECT 17BP.14.R.9
-L- POC Sta. 11+60.00

END PROJECT 17BP.14.R.9
-L- POC Sta. 13+00.00

GRAPHIC SCALES

50 25 0 50 100
PLANS

20 10 0 20 40
PROFILE (HORIZONTAL)

4 2 0 4 8
PROFILE (VERTICAL)

INDEX OF SHEETS

SHEET NO.	DESCRIPTION
UO-1	TITLE SHEET
UO-2	UTILITY BY OTHERS PLAN SHEETS

UTILITY OWNERS ON PROJECT

(1) PROGRESS ENERGY - POWER DISTRIBUTION
(2) AT&T - TELEPHONE

PREPARED IN THE OFFICE OF:
DIVISION OF HIGHWAYS
UTILITIES UNIT
UTILITIES ENGINEERING

1591 MAIL SERVICES CENTER
RALEIGH NC 27699-1591
PHONE (919) 707-6690
FAX (919) 250-4151

Roger Worthington, P.E.	UTILITIES SECTION ENGINEER
Carl A. Barclay, P.E.	UTILITIES SQUAD LEADER PROJECT ENGINEER
James E. Swinson	UTILITIES PROJECT DESIGNER

PROJECT REFERENCE NO.	SHEET NO.
17BP.14.R.9	UO-2

UTILITIES BY OTHERS

NOTE:
ALL PROPOSED UTILITY WORK SHOWN ON THIS SHEET WILL BE DONE BY OTHERS

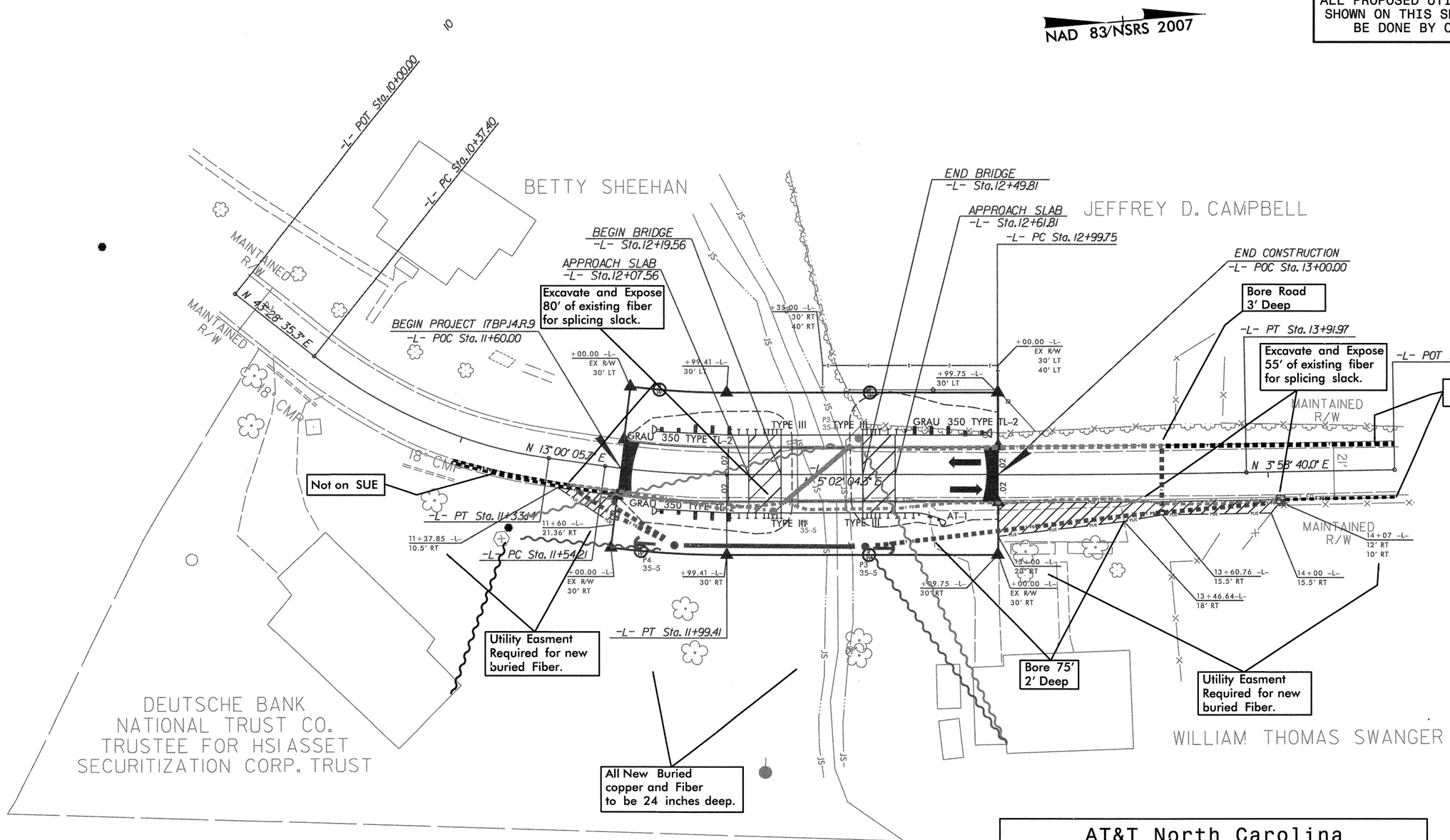

CURVE DATA FOR -L-

PI Sta 10+86.43	PI Sta 11+76.85	PI Sta 13+45.86
Δ = 30° 28' 29.6" (LT)	Δ = 17° 58' 01.4" (LT)	Δ = 1° 03' 24.3" (LT)
D = 31° 49' 51.6"	D = 17° 37' 46.1"	D = 1° 08' 45.3"
L = 95.74'	L = 45.19'	L = 92.22'
T = 49.03'	T = 22.63'	T = 46.11'
R = 180.00'	R = 325.00'	R = 5,000.00'

AT&T North Carolina

TELEPHONE RELOCATION PLANS

January 7, 2013

LEGEND

- ..... AT&T NC POLE
- ..... PROG ENERGY POLE
- ..... AT&T NC ANCHOR
- ..... AERIAL TELEPHONE CABLE
- ..... BURIED TELEPHONE CABLE
- ..... BURIED FIBER OPTIC CABLE
- ..... AERIAL SERVICE WIRE
- ..... AT&T HANDHOLE

COLOR CODE:

RED = NEW TO BE INSTALLED
GREEN = EXISTING TO BE REMOVED
BLUE = EXISTING TO REMAIN

17BP.14.R.9
CROSS SECTIONS

INDEX OF SHEETS

TITLE	STATION	SHEET NO.
CROSS-SECTION INDEX		X-1
CROSS-SECTION SUMMARY		X-1A
-L- CROSS-SECTIONS	11+60 - 13+00	X-2 THROUGH X-4

NOTE: Quantities are approximate only. The Resident Engineer will recross-section the work accurately when the project is staked out. These cross-section notes will be used in computing the final quantities for which the contractor will be paid."

NOTE: Approximate quantities only. Unclassified Excavation, Fine Grading, and Clearing and Grubbing will be paid for at the contract lump sum price for "Grading".

8/23/99

7/26/2013
8:31:33 AM
$:\DOR Projects\DR1100 - NCDOT Group W\430261\Roadway\XSC\430261_RDY_XPL_001.dgn

PROJ. REFERENCE NO.	SHEET NO.
17BP.14.R.9	X-1A

STATE OF NORTH CAROLINA
DIVISION OF HIGHWAYS

NOTE: EMBANKMENT COLUMN DOES NOT INCLUDE BACKFILL FOR UNDERCUT

CROSS-SECTION SUMMARY

Station L	Uncl. Exc. (cu. yd.)	Embt (cu. yd.)
11+70.00	0	0
11+80.00	5	3
11+90.00	5	4
12+00.00	5	6
12+10.00	6	8
12+20.00	6	5
12+50.00	0	0
12+60.00	2	1
12+70.00	3	1
12+80.00	4	0
12+90.00	3	0
13+00.00	2	0

0 2.5 5	PROJ. REFERENCE NO.	SHEET NO.
	17BP.14.R.9	X-2

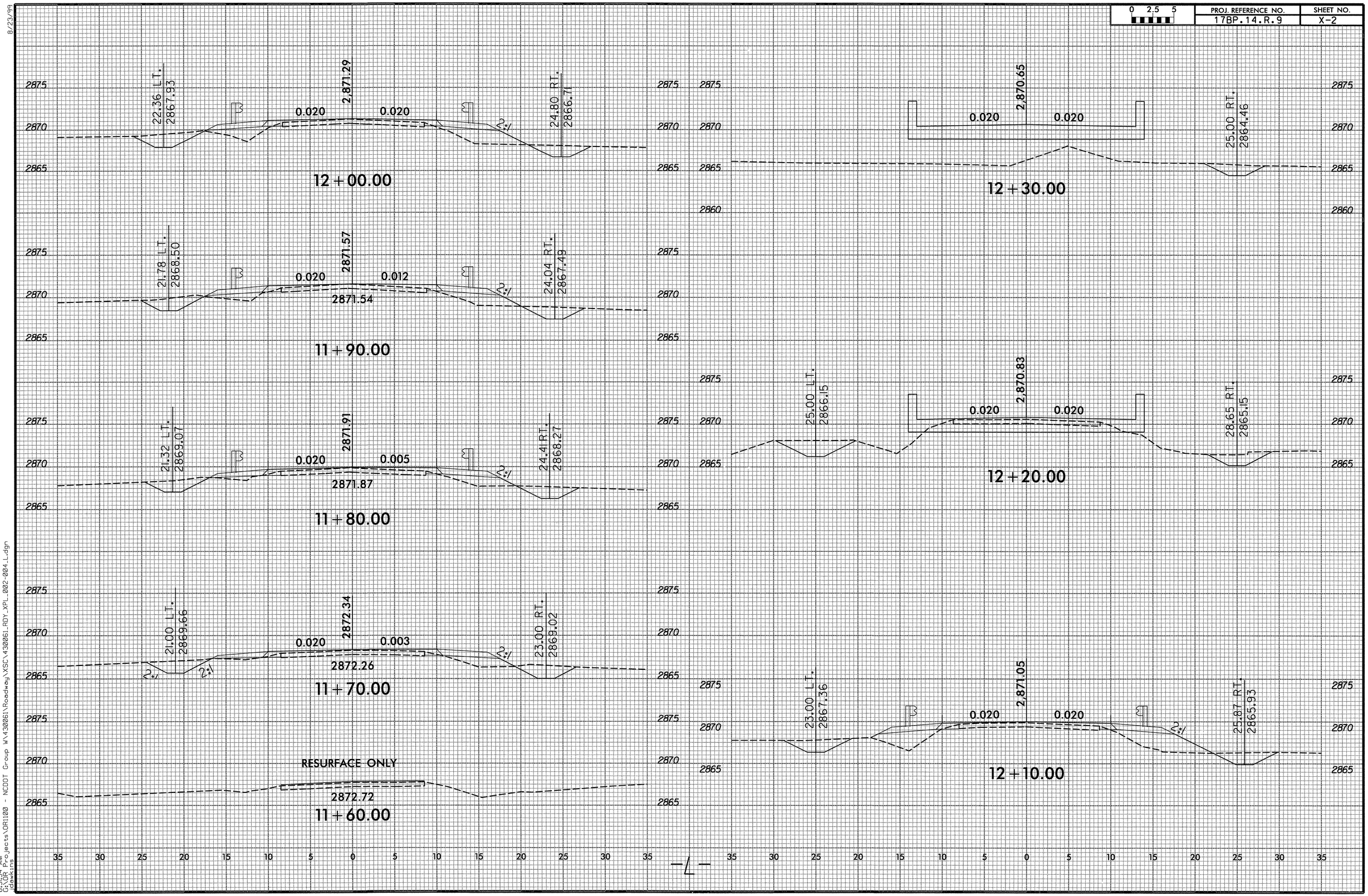

8/23/99
8:31:34 AM
G:\DOT Projects\DR1100 - NCDOT Group W\430061\Roadway\XSC\430061_RDY_XPL_002-004_L.dgn
jdawkins

0 2.5 5	PROJ. REFERENCE NO.	SHEET NO.
	17BP.14.R.9	X-3

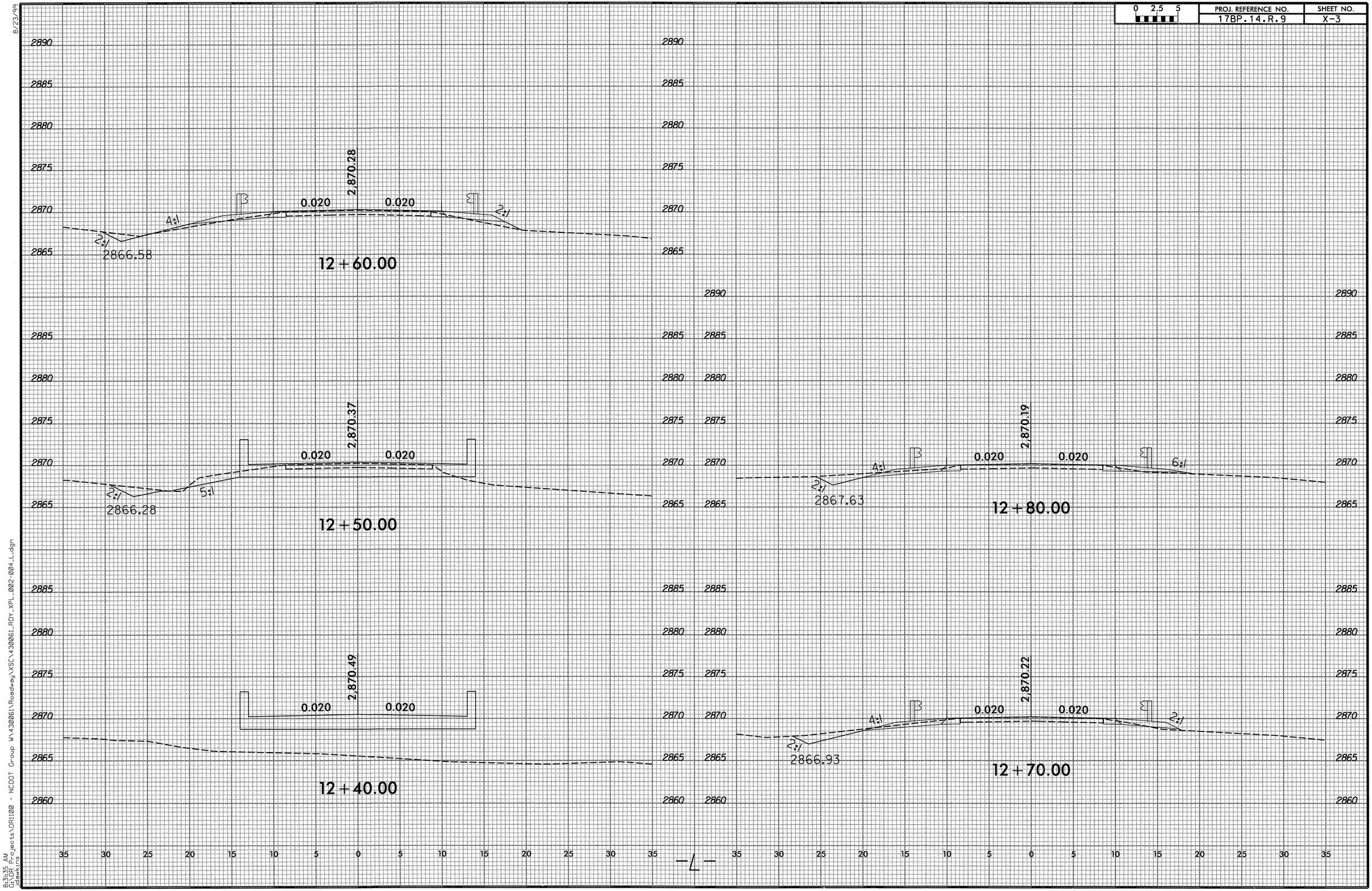

8/23/99

8:31:35 AM
G:\DR Projects\DR1100 - NCDOT Group WX430061\Roadway\XSC\430061_RDY_XPL_002-004_L.dgn
jdawkins

0 2.5 5	PROJ. REFERENCE NO.	SHEET NO.
	17BP.14.R.9	X-4

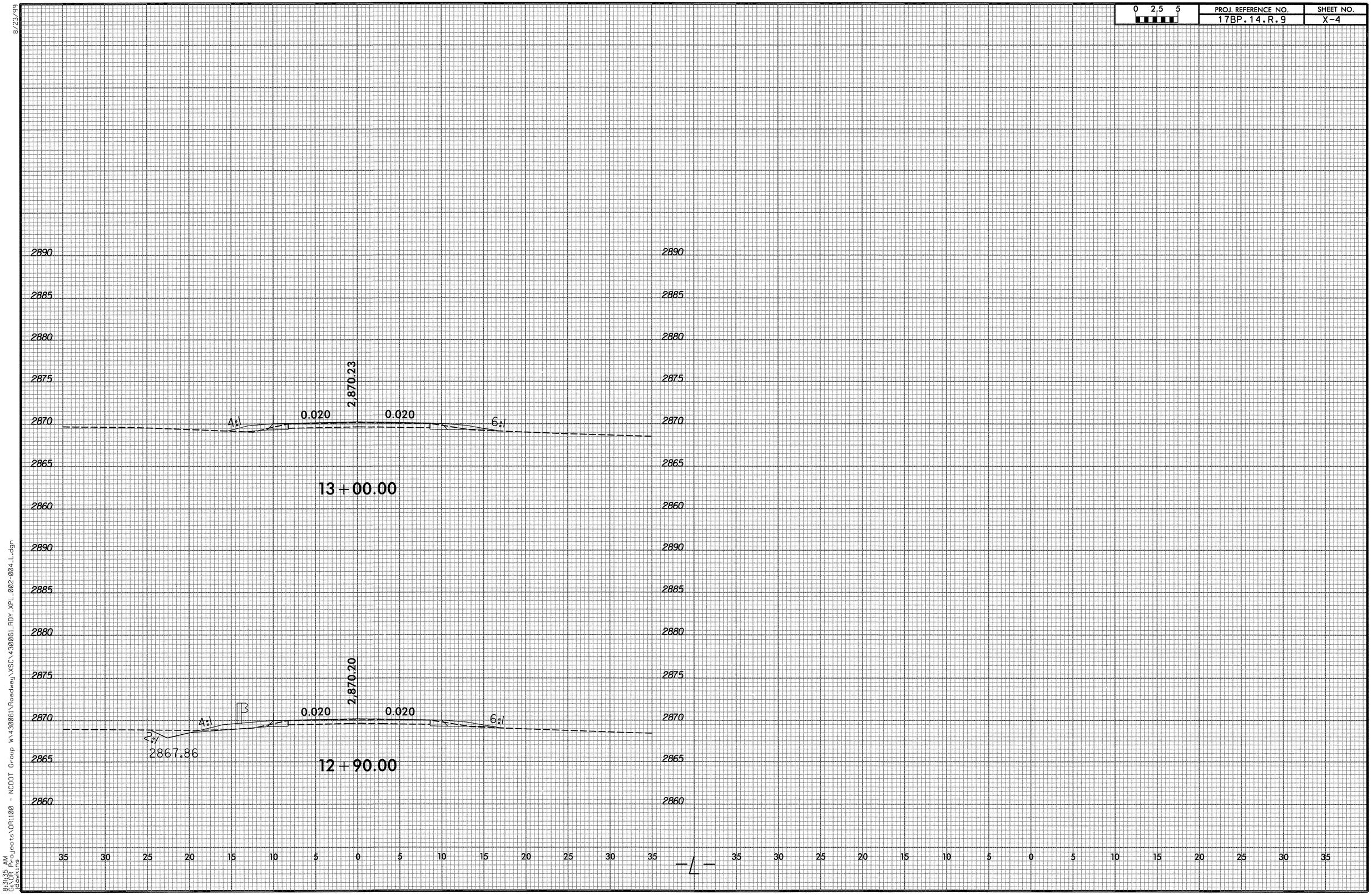

8/23/99

8:31:35 AM
G:\OR Projects\OR1100 - NCDOT Group W\430061\Roadway\XSC\430061_RDY_XPL_002-004_L.dgn
jdawkins

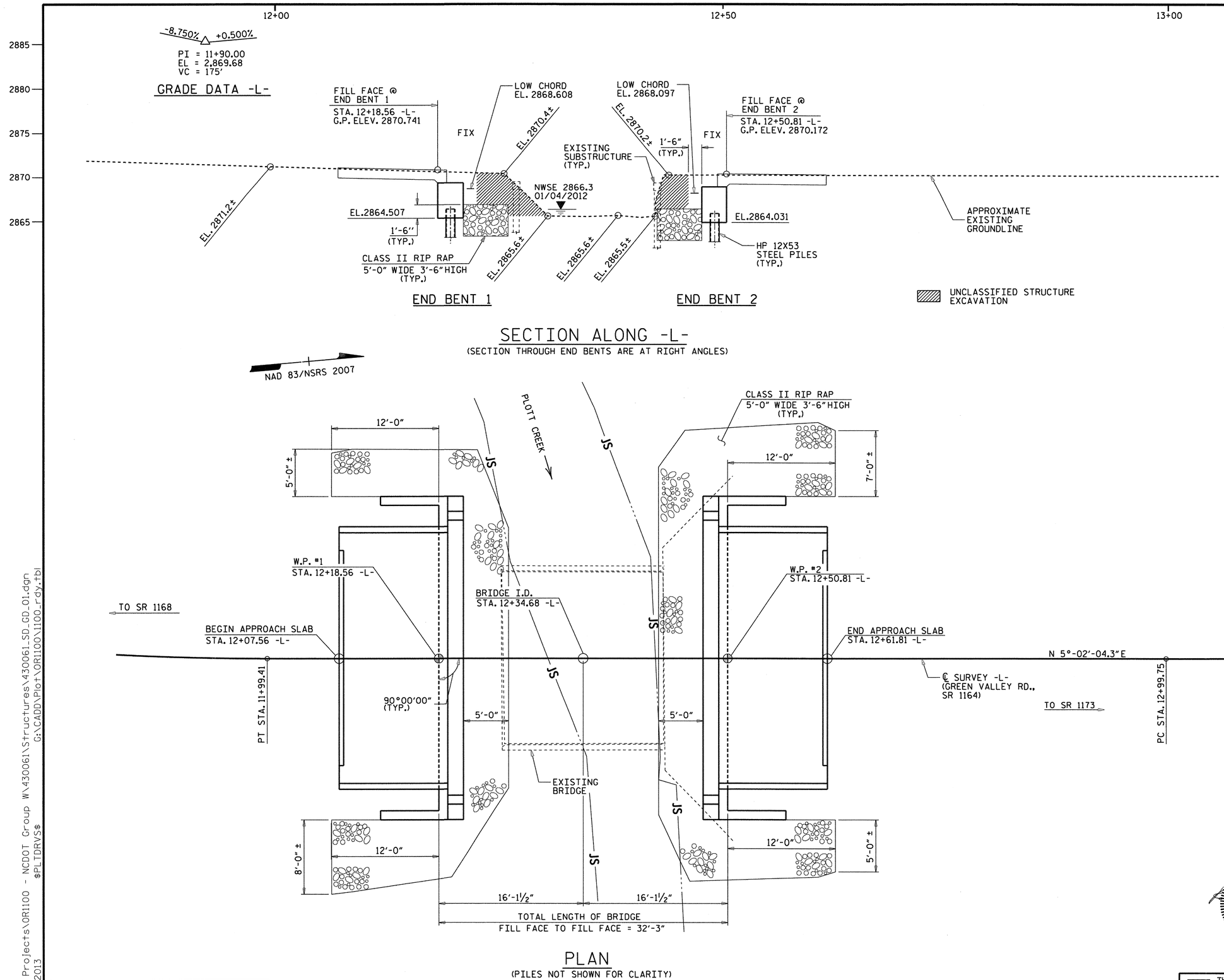

PROJECT NO. 17BP.14.R.9

HAYWOOD COUNTY

STATION: 12+34.68 -L-

SHEET 1 OF 3 REPLACES BRIDGE NO. 61

STATE OF NORTH CAROLINA
DEPARTMENT OF TRANSPORTATION
RALEIGH

GENERAL DRAWING

FOR BRIDGE OVER PLOTT CREEK ON SR 1164 BETWEEN SR 1168 AND SR 1173

NORTH CAROLINA PROFESSIONAL SEAL 36321 ENGINEER ROBERT F. DECOLA 2-5-13

THE LOUIS BERGER GROUP, Inc.
1001 Wade Avenue, Suite 400
Raleigh, NC 27605-3322
NC COA No. F-0840

REVISIONS								
NO.	BY:	DATE:	NO.	BY:	DATE:			
1			3					
2			4					

SHEET NO. S-1

TOTAL SHEETS 13

DRAWN BY : M. HOGAN DATE : DEC 2012
CHECKED BY : R. DECOLA DATE : DEC 2012

G:\OR Projects\OR1100 - NCDOT Group W\430061\Structures\430061_SD_GD_01.dgn
7/25/2013 G:\CADD\Plot\OR1100\1100_rdy.tbl
$PLTDRV$

FOUNDATION NOTES:

PILES AT END BENT 1 ARE DESIGNED FOR A FACTORED RESISTANCE OF 61 TONS PER PILE.

DRIVE PILES AT END BENT 1 TO A REQUIRED DRIVING RESISTANCE OF 104 TONS PER PILE. THIS DRIVING RESISTANCE INCLUDES ADDITIONAL RESISTANCE FOR SCOUR.

PILES AT END BENT 2 ARE DESIGNED FOR A FACTORED RESISTANCE OF 61 TONS PER PILE.

DRIVE PILES AT END BENT 2 TO A REQUIRED DRIVING RESISISTANCE OF 104 TONS PER PILE. THIS DRIVING RESISTANCE INCLUDES ADDITIONAL RESISTANCE FOR SCOUR.

FOR PILES, SEE SECTION 450 OF THE STANCARD SPECIFICATIONS.

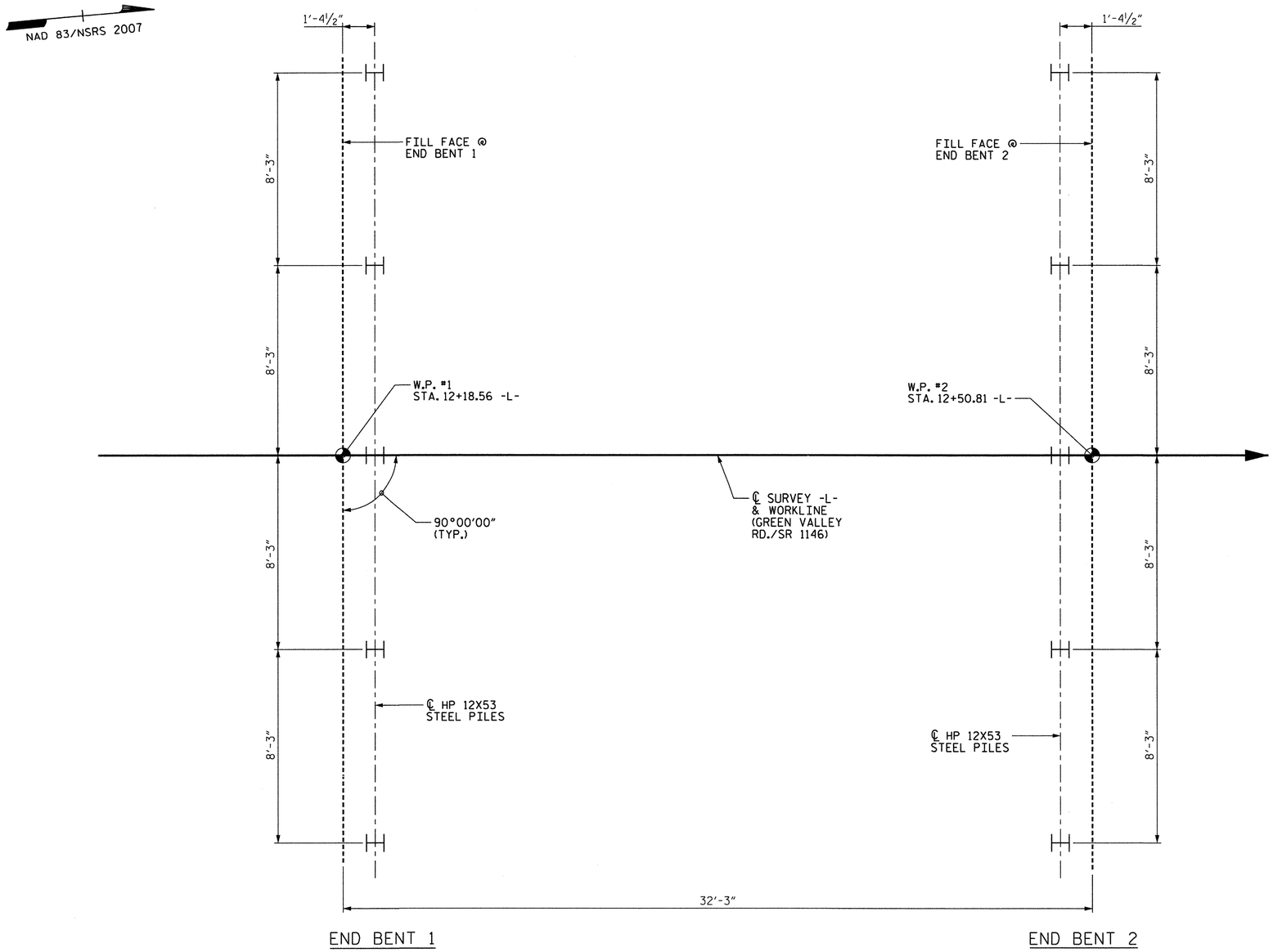

FOUNDATION LAYOUT

PROJECT NO. 17BP.14.R.9

HAYWOOD COUNTY

STATION: 12+34.68 -L-

SHEET 2 OF 3

STATE OF NORTH CAROLINA
DEPARTMENT OF TRANSPORTATION
RALEIGH

GENERAL DRAWING

FOR BRIDGE OVER PLOTT CREEK ON SR 1164 BETWEEN SR 1168 AND SR 1173

NORTH CAROLINA PROFESSIONAL SEAL 36321 ENGINEER ROBERT F. DeCOLA

THE LOUIS BERGER GROUP, Inc.
1001 Wade Avenue, Suite 400
Raleigh, NC 27605-3322
NC COA No. F-0840

REVISIONS						SHEET NO.
NO.	BY:	DATE:	NO.	BY:	DATE:	S-2
1			3			TOTAL SHEETS
2			4			13

DRAWN BY : M. HOGAN DATE : DEC 2012
CHECKED BY : R. DECOLA DATE : DEC 2012

G:\OR Projects\OR1100 - NCDOT Group W\430061\Structures\430061_SD_GD_02.dgn
$PLTDRVS$ G:\CADD\Plot\OR1100\1100_rdy.tbl
7/25/2013

BM#1: 8" SPIKE SET IN ROOT OF 36" CHESTNUT TREE, BL STATION 6+14.00, 46' RT. EL. 2868.77, N 651334 E 801346

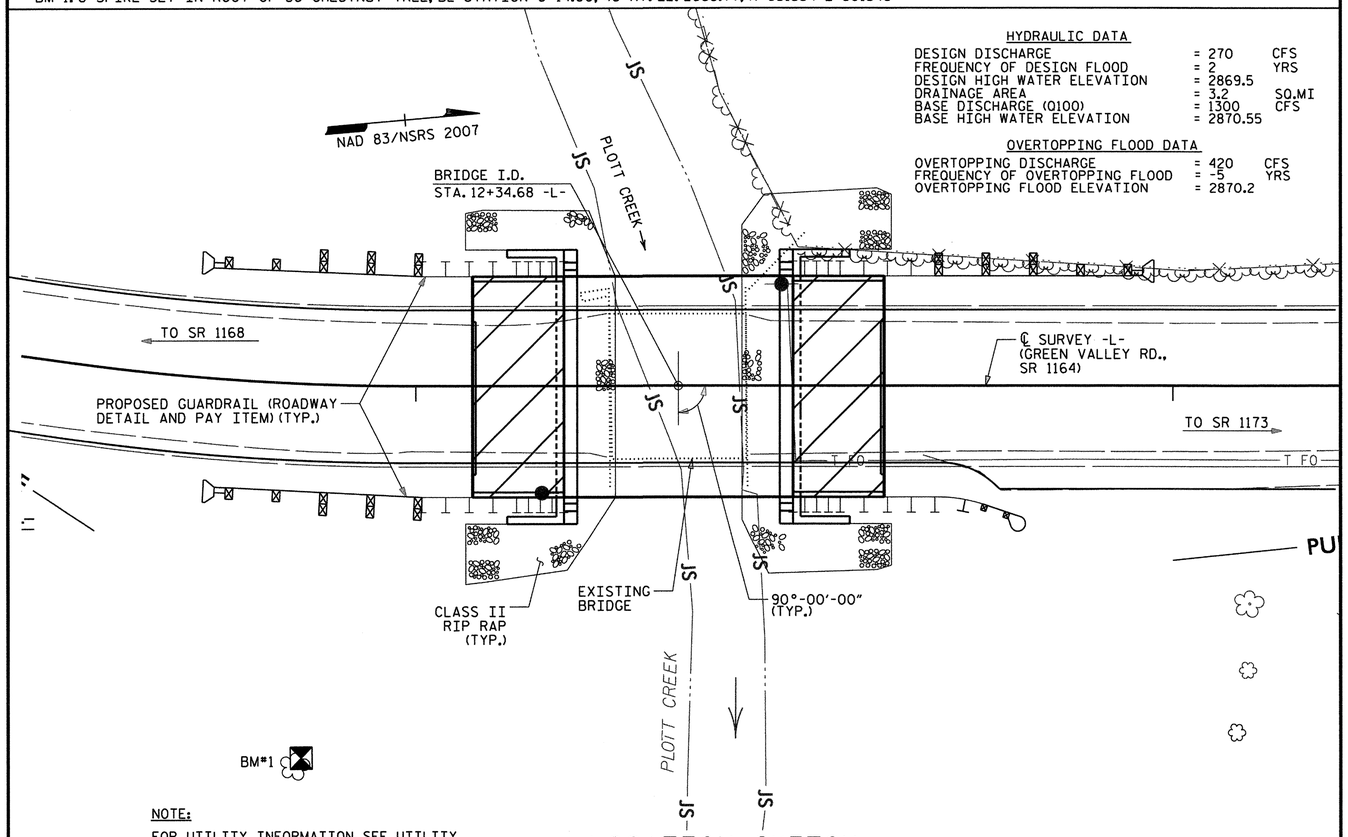

HYDRAULIC DATA

DESIGN DISCHARGE	= 270	CFS
FREQUENCY OF DESIGN FLOOD	= 2	YRS
DESIGN HIGH WATER ELEVATION	= 2869.5	
DRAINAGE AREA	= 3.2	SQ.MI
BASE DISCHARGE (Q100)	= 1300	CFS
BASE HIGH WATER ELEVATION	= 2870.55	

OVERTOPPING FLOOD DATA

OVERTOPPING DISCHARGE	= 420	CFS
FREQUENCY OF OVERTOPPING FLOOD	= -5	YRS
OVERTOPPING FLOOD ELEVATION	= 2870.2	

NOTE:

FOR UTILITY INFORMATION, SEE UTILITY PLANS AND SPECIAL PROVISIONS.

LOCATION SKETCH

NOTES :

ASSUMED LIVE LOAD = HL-93 OR ALTERNATE LOADING.

FOR EROSION CONTROL MEASURES SEE EROSION CONTROL PLANS.

THIS BRIDGE HAS BEEN DESIGNED IN ACCORDANCE WITH THE AASHTO LRFD BRIDGE DESIGN SPECIFICATIONS.

REMOVAL OF THE EXISTING BRIDGE SHALL BE PERFORMED SO AS NOT TO ALLOW DEBRIS TO FALL INTO THE WATER. THE CONTRACTOR SHALL REMOVE THE BRIDGE AND SUBMIT PLANS FOR DEMOLITION IN ACCORDANCE WITH ARTICLE 402-2 OF THE STANDARD SPECIFICATIONS.

THE EXISTING STRUCTURE CONSISTING OF ONE 18'-6" TIMBER JOIST SPAN WITH TIMBER FLOOR ON TIMBER ABUTMENTS LOCATED AT THE EXISTING STRUCTURE SHALL BEREMOVED. THE EXISTING BRIDGE IS PRESENTLY POSTED BELOW THE LEGAL LOAD LIMIT. SHOULD THE STRUCTURAL INTEGRITY OF THE BRIDGE DETERIORATE DURING CONSTRUCTION OF THE PROPOSED BRIDGE, THE LOAD LIMIT MAY BE REDUCED AS FOUND NECESSARY DURING THE LIFE OF THE PROJECT.

THE MATERIAL SHOWN IN THE CROSS-HATCHED AREA SHALL BE EXCAVATED FOR A DISTANCE OF 30 FT. EACH SIDE OF CENTERLINE ROADWAY AS DIRECTED BY THE ENGINEER. THIS WORK WILL BE PAID FOR AT THE CONTRACT LUMP SUM PRICE FOR UNCLASSIFIED STRUCTURE EXCAVATION. SEE SECTION 412 OF THE STANDARD SPECIFICATIONS.

THE SUBSTRUCTURE OF THE EXISTING BRIDGE INDICATED ON THE PLANS IS FROM THE BEST INFORMATION AVAILABLE. SINCE THIS INFORMATION IS SHOWN FOR THE CONVENIENCE OF THE CONTRACTOR, THE CONTRACTOR SHALL HAVE NO CLAIM WHATSOEVER AGAINST THE DEPARTMENT OF TRANSPORTATION FOR ANY DELAYS OR ADDITIONAL COST INCURRED BASED ON DIFFERENCES BETWEEN THE EXISTING BRIDGE SUBSTRUCTURE SHOWN ON THE PLANS AND THE ACTUAL CONDITIONS AT THE PROJECT SITE.

ASPHALT WEARING SURFACE IS INCLUDED IN ROADWAY QUANTITY ON ROADWAY PLANS.

THIS STRUCTURE HAS BEEN DESIGNED IN ACCORDANCE WITH "HEC 18 EVALUATING SCOUR AT BRIDGES".

FOR SUBMITTAL OF WORKING DRAWINGS, SEE SPECIAL PROVISIONS.

FOR FALSEWORK AND FORMWORK, SEE SPECIAL PROVISIONS.

FOR CRANE SAFETY, SEE SPECIAL PROVISIONS.

FOR GROUT FOR STRUCTURES, SEE SPECIAL PROVISIONS.

THIS BRIDGE IS LOCATED IN SEISMIC ZONE 1.

FOR OTHER DESIGN DATA AND NOTES SEE STANDARD NOTES SHEET.

TOTAL BILL OF MATERIAL

	REMOVAL OF EXISTING STRUCTURE @ STA. 12+34.68	CLASS A CONCRETE	BRIDGE APPROACH SLABS	REINFORCING STEEL	HP 12 X 53 STEEL PILES		VERTICAL CONCRETE BARRIER RAIL	RIP RAP CLASS II (3'-6" THICK)	GEOTEXTILE FABRIC FOR DRAINAGE	ELASTOMERIC BEARINGS	3'-0" X 1'-6" PRESTRESSED CONCRETE CORED SLABS	
	LUMP SUM	CU. YDS.	LUMP SUM	LBS.	NO.	LIN. FT.	LIN. FT.	TON	SQ. YDS.	LUMP SUM	NO.	LIN. FT.
SUPERSTRUCTURE			LUMP SUM				60.3			LUMP SUM	10	300
END BENT NO. 1		19.4		2426	5	55		69	41			
END BENT NO. 2		19.4		2426	5	45		82	49			
TOTAL	LUMP SUM	38.8	LUMP SUM	4852	10	100	60.3	151	90	LUMP SUM	10	300

PROJECT NO. 17BP.14.R.9

HAYWOOD COUNTY

STATION: 12+34.68 -L-

SHEET 3 OF 3

NORTH CAROLINA PROFESSIONAL SEAL 36321 ENGINEER ROBERT F. DeFOLA 7-25-13

STATE OF NORTH CAROLINA
DEPARTMENT OF TRANSPORTATION
RALEIGH

GENERAL DRAWING

FOR BRIDGE OVER PLOTT CREEK ON SR 1164 BETWEEN SR 1168 AND SR 1173

THE LOUIS BERGER GROUP, Inc.
1001 Wade Avenue, Suite 400
Raleigh, NC 27605-3322
NC COA No. F-0840

REVISIONS						SHEET NO.
NO.	BY:	DATE:	NO.	BY:	DATE:	S-3
1			3			TOTAL SHEETS
2			4			13

DRAWN BY : M. HOGAN DATE : DEC 2012
CHECKED BY : R. DECOLA DATE : DEC 2012

G:\OR Projects\OR1100 - NCDOT Group W\430061\Structures\430061_SD_GD_03.dgn
7/25/2013 $PLTDRVS$ G:\CADD\Plot\OR1100\1100_rdy.tbl

LOAD AND RESISTANCE FACTOR RATING (LRFD) SUMMARY FOR PRESTRESSED CONCRETE GIRDERS

LEVEL		VEHICLE	WEIGHT (W) (TONS)	CONTROLLING LOAD RATING (#)	MINIMUM RATING FACTORS (RF)	TONS = W X RF	STRENGTH I LIMIT STATE											SERVICE III LIMIT STATE						COMMENT NUMBER
							LIVE-LOAD FACTORS (γ_{LL})	MOMENT					SHEAR					LIVE-LOAD FACTORS (γ_{LL})	MOMENT					
								DISTRIBUTION FACTORS (DF)	RATING FACTOR	SPAN	GIRDER LOCATION	DISTANCE FROM LEFT END OF SPAN (ft)	DISTRIBUTION FACTORS (DF)	RATING FACTOR	SPAN	GIRDER LOCATION	DISTANCE FROM LEFT END OF SPAN (ft)		DISTRIBUTION FACTORS (DF)	RATING FACTOR	SPAN	GIRDER LOCATION	DISTANCE FROM LEFT END OF SPAN (ft)	
DESIGN LOAD RATING		HL-93 (Inventory)	N/A	1	1.23	-	1.75	0.30	1.23	A	EL	14.50	0.60	1.28	A	I	2.50	0.80	0.30	1.38	A	EL	14.50	
		HL-93 (Operating)	N/A		1.59	-	1.35	0.30	1.59	A	EL	14.50	0.60	2.71	A	I	2.50	N/A	-	-	-	-	-	
		HS-20 (Inventory)	36.000	2	1.72	61.92	1.75	0.30	1.72	A	EL	11.50	0.60	1.84	A	I	2.50	0.80	0.30	1.95	A	EL	11.50	
		HS-20 (Operating)	36.000		2.23	80.28	1.35	0.30	2.23	A	EL	11.50	0.60	3.10	A	I	2.50	N/A	-	-	-	-	-	
LEGAL LOAD RATING	Single Vehicle (SV)	SNSH	13.500		3.12	42.12	1.40	0.30	3.47	A	EL	14.50	0.60	5.89	A	I	5.50	0.80	0.30	3.12	A	EL	14.50	
		SNGARBS2	20.000		2.79	55.80	1.40	0.30	3.07	A	EL	11.50	0.60	4.57	A	I	2.50	0.80	0.30	2.79	A	EL	11.50	
		SNAGRIS2	22.000		2.83	62.26	1.40	0.30	3.12	A	EL	11.50	0.60	4.42	A	I	2.50	0.80	0.30	2.83	A	EL	11.50	
		SNCOTTS3	27.250		1.56	42.51	1.40	0.30	1.74	A	EL	14.50	0.60	2.88	A	I	5.50	0.80	0.30	1.56	A	EL	14.50	
		SNAGGRS4	34.925		1.51	52.74	1.40	0.30	1.67	A	EL	14.50	0.60	2.69	A	I	26.50	0.80	0.30	1.51	A	EL	14.50	
		SNS5A	35.550		1.46	51.90	1.40	0.30	1.62	A	EL	14.50	0.60	2.85	A	I	26.50	0.80	0.30	1.46	A	EL	14.50	
		SNS6A	39.950		1.38	55.13	1.40	0.30	1.53	A	EL	14.50	0.60	2.61	A	I	2.50	0.80	0.30	1.38	A	EL	14.50	
		SNS7B	42.000	3	1.34	56.28	1.40	0.30	1.49	A	EL	14.50	0.60	2.68	A	I	2.50	0.80	0.30	1.34	A	EL	14.50	
	Truck Tractor Semi-Trailer (TTST)	TNAGRIT3	33.000		1.79	59.07	1.40	0.30	1.99	A	EL	14.50	0.60	3.19	A	I	2.50	0.80	0.30	1.79	A	EL	14.50	
		TNT4A	33.075		1.69	55.90	1.40	0.30	1.88	A	EL	14.50	0.60	2.99	A	I	26.50	0.80	0.30	1.69	A	EL	14.50	
		TNT6A	41.600		1.54	64.06	1.40	0.30	1.71	A	EL	14.50	0.60	2.87	A	I	2.50	0.80	0.30	1.54	A	EL	14.50	
		TNT7A	42.000		1.59	66.78	1.40	0.30	1.77	A	EL	14.50	0.60	2.75	A	I	26.50	0.80	0.30	1.59	A	EL	14.50	
		TNT7B	42.000		1.50	63.00	1.40	0.30	1.67	A	EL	14.50	0.60	2.60	A	I	2.50	0.80	0.30	1.50	A	EL	14.50	
		TNAGRIT4	43.000		1.55	66.65	1.40	0.30	1.73	A	EL	14.50	0.60	2.54	A	I	26.50	0.80	0.30	1.55	A	EL	14.50	
		TNAGT5A	45.000		1.51	67.95	1.40	0.30	1.67	A	EL	14.50	0.60	2.80	A	I	2.50	0.80	0.30	1.51	A	EL	14.50	
		TNAGT5B	45.000		1.47	66.15	1.40	0.30	1.63	A	EL	17.50	0.60	2.03	A	I	2.50	0.80	0.30	1.47	A	EL	14.50	

LOAD FACTORS:

DESIGN LOAD RATING FACTORS	LIMIT STATE	γ_{DC}	γ_{DW}
	STRENGTH I	1.25	1.50
	SERVICE III	1.00	1.00

NOTES:

MINIMUM RATING FACTORS ARE BASED ON THE STRENGTH I AND SERVICE III LIMIT STATES.

ALLOWABLE STRESSES FOR SERVICE III LIMIT STATE ARE AS REQUIRED FOR DESIGN.

(#) CONTROLLING LOAD RATING

(1) DESIGN LOAD RATING (HL-93)

(2) DESIGN LOAD RATING (HS-20)

(3) LEGAL LOAD RATING **

** SEE CHART FOR VEHICLE TYPE

GIRDER LOCATION

I - INTERIOR GIRDER
EL - EXTERIOR LEFT GIRDER
ER - EXTERIOR RIGHT GIRDER

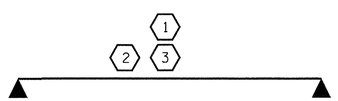

LRFR SUMMARY

PROJECT NO. 17BP.14.R.9
HAYWOOD COUNTY
STATION: 12+34.68 -L-

STATE OF NORTH CAROLINA
DEPARTMENT OF TRANSPORTATION
RALEIGH

LRFR SUMMARY FOR 30' CORED SLAB UNIT 90° SKEW
(NON-INTERSTATE TRAFFIC)

NORTH CAROLINA PROFESSIONAL SEAL 36321 ENGINEER ROBERT F. DECOLA

THE LOUIS BERGER GROUP, Inc.
1001 Wade Avenue, Suite 400
Raleigh, NC 27605-3322
NC COA No. F-0840

REVISIONS						SHEET NO.
NO.	BY:	DATE:	NO.	BY:	DATE:	S-4
1			3			TOTAL SHEETS
2			4			13

ASSEMBLED BY : M. HOGAN DATE : DEC. 2012
CHECKED BY : R. DECOLA DATE : DEC. 2012
DRAWN BY : CVC 6/10
CHECKED BY : DNS 6/10

G:\OR Projects\OR1100 - NCDOT Group W\430061\Structures\430061_SD_LRFR.dgn
$PLTDRVS$ G:\CADD\Plot\OR1100\1100_rdy.tbl
7/25/2013

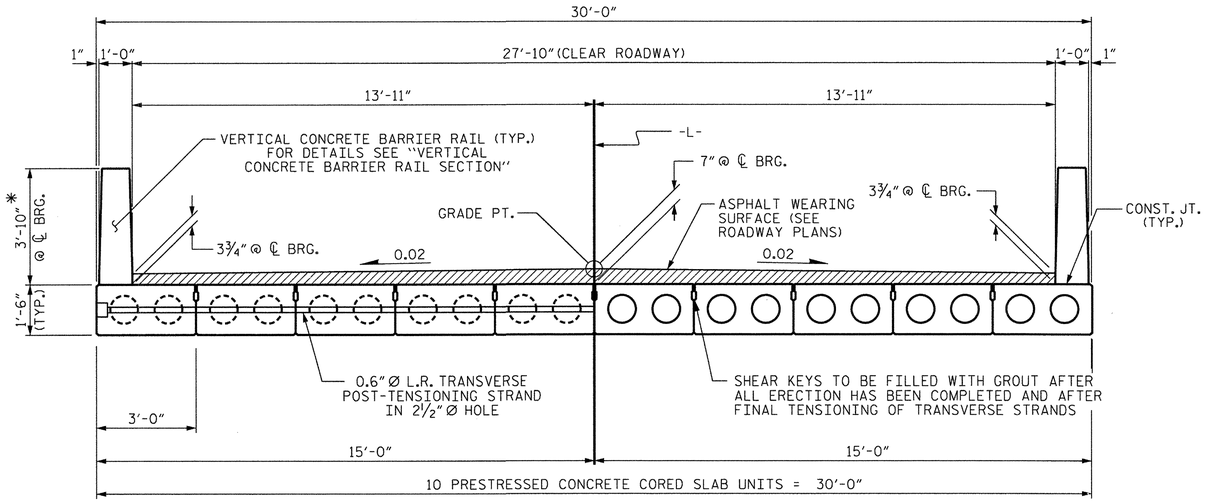

HALF SECTION
AT INTERMEDIATE DIAPHRAGMS

HALF SECTION
THROUGH VOIDS

TYPICAL SECTION

* - THE MAXIMUM BARRIER RAIL HEIGHT AND ASPHALT THICKNESS IS SHOWN. THE HEIGHT OF THE BARRIER RAIL AND ASPHALT THICKNESS VARIES WHILE THE TOP OF THE BARRIER RAIL FOLLOWS THE PROFILE OF THE GUTTERLINE. FOR RAIL HEIGHT DETAILS AND ASPHALT THICKNESS SEE THE "VERTICAL CONCRETE BARRIER RAIL SECTION" DETAIL.

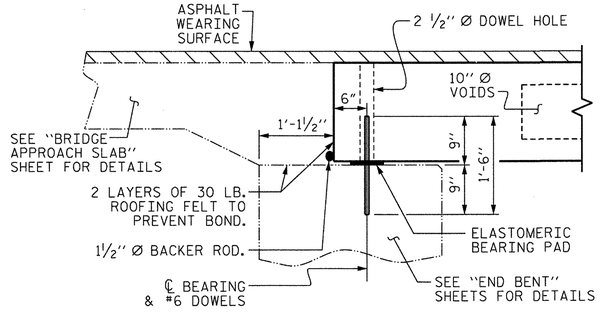

SECTION AT END BENT

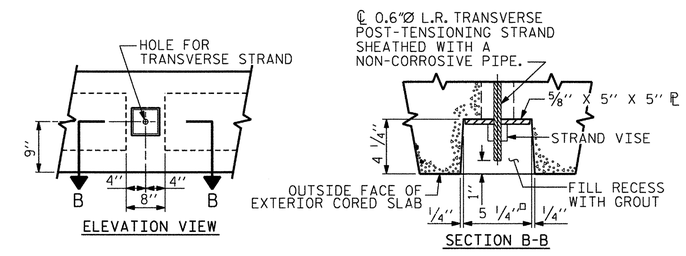

GROUTED RECESS AT END OF POST-TENSIONED STRAND OF CORED SLABS

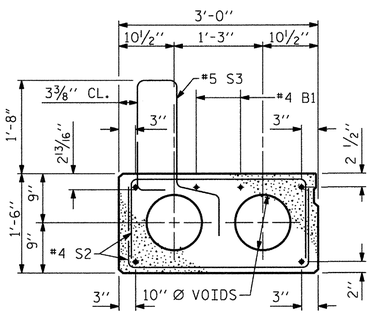

EXTERIOR SLAB SECTION

(FOR PRESTRESSED STRAND LAYOUT, SEE INTERIOR SLAB SECTION)

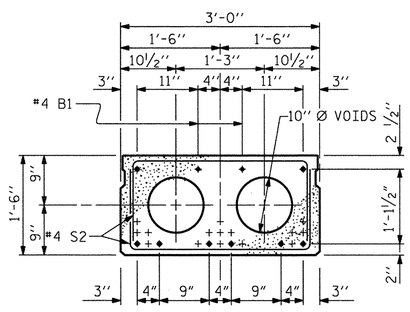

INTERIOR SLAB SECTION

0.6" Ø LOW RELAXATION STRAND LAYOUT

(8 STRANDS REQUIRED)

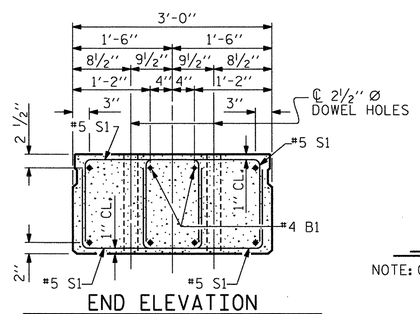

END ELEVATION

SHOWING PLACEMENT OF DOUBLE STIRRUPS AND LOCATION OF DOWEL HOLES (STRAND LAYOUT NOT SHOWN) INTERIOR SLAB SECTION SHOWN-EXTERIOR SLAB SECTION SIMILAR EXCEPT SHEAR KEY LOCATION.

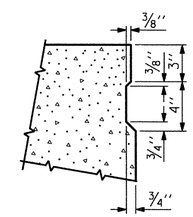

SHEAR KEY DETAIL

NOTE: OMIT SHEAR KEY ON OUTSIDE FACE OF EXTERIOR CORED SLABS.

NORTH CAROLINA PROFESSIONAL ENGINEER SEAL 36321 ROBERT F. DECOTA

PROJECT NO. 17BP.14.R.9

HAYWOOD COUNTY

STATION: 12+34.68 -L-

SHEET 1 OF 3

STATE OF NORTH CAROLINA
DEPARTMENT OF TRANSPORTATION
RALEIGH

3'-0" X 1'-6" PRESTRESSED CONCRETE CORED SLAB UNIT

ASSEMBLED BY : R. KNIGHT	DATE : NOV. 2012		
CHECKED BY : S. COOK	DATE : NOV. 2012		
DRAWN BY : WJH 4/89	REV. 7/10/01RR	RWW/LES	
CHECKED BY : FCJ 5/89	REV. 5/1/06R	TLA/GM	
	REV. 10/1/11	MAA/GM	

THE LOUIS BERGER GROUP, Inc.
1001 Wade Avenue, Suite 400
Raleigh, NC 27605-3322
NC COA No. F-0840

REVISIONS							
NO.	BY:	DATE:	NO.	BY:	DATE:	SHEET NO.	S-5
1			3			TOTAL SHEETS	13
2			4				

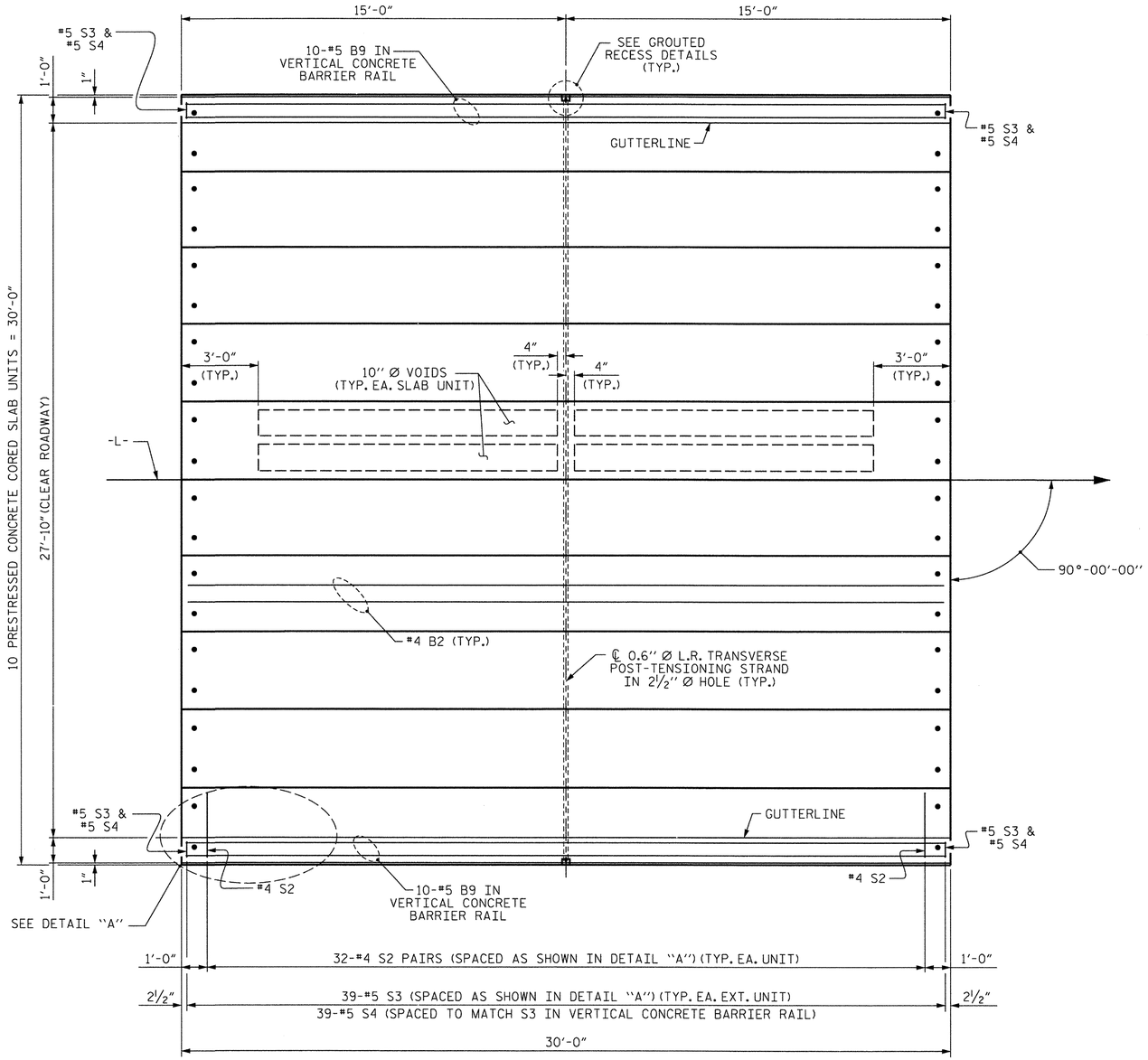

PLAN OF UNIT

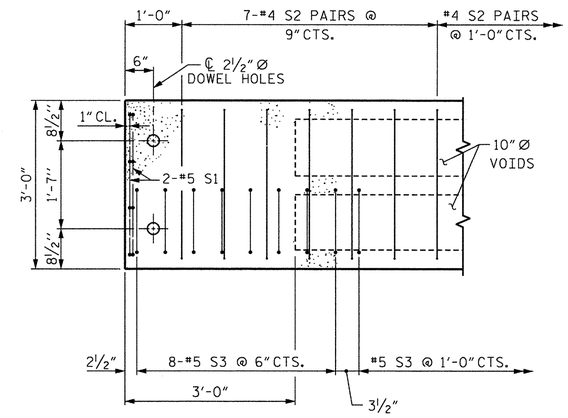

DETAIL "A"

NOTE: EXTERIOR UNIT SHOWN - INTERIOR UNIT SIMILAR EXCEPT OMIT #5 S3 BARS.

PROJECT NO. 17BP.14.R.9

HAYWOOD COUNTY

STATION: 12+34.68 -L-

SHEET 2 OF 3

STATE OF NORTH CAROLINA
DEPARTMENT OF TRANSPORTATION
RALEIGH

PLAN OF 30' UNIT
27'-10" CLEAR ROADWAY
90° SKEW

NORTH CAROLINA PROFESSIONAL SEAL 36321 ENGINEER ROBERT F. DECOLA

THE LOUIS BERGER GROUP, Inc.
1001 Wade Avenue, Suite 400
Raleigh, NC 27605-3322
NC COA No. F-0840

REVISIONS						SHEET NO.
NO.	BY:	DATE:	NO.	BY:	DATE:	S-6
1			3			TOTAL SHEETS
2			4			13

ASSEMBLED BY : R. KNIGHT		DATE : APR. 2012	
CHECKED BY : R. DECOLA		DATE : DEC 2012	
DRAWN BY : DGE 3/09	REV. 12/5/11	MAA/AAC	
CHECKED BY : BCH 3/09			

G:\OR Projects\OR1100 - NCDOT Group W\430061\Structures\430061_SD_PCS_02.dgn
7/25/2013 $PLTDRVS$ G:\CADD\Plot\OR1100\1100_rdy.tbl

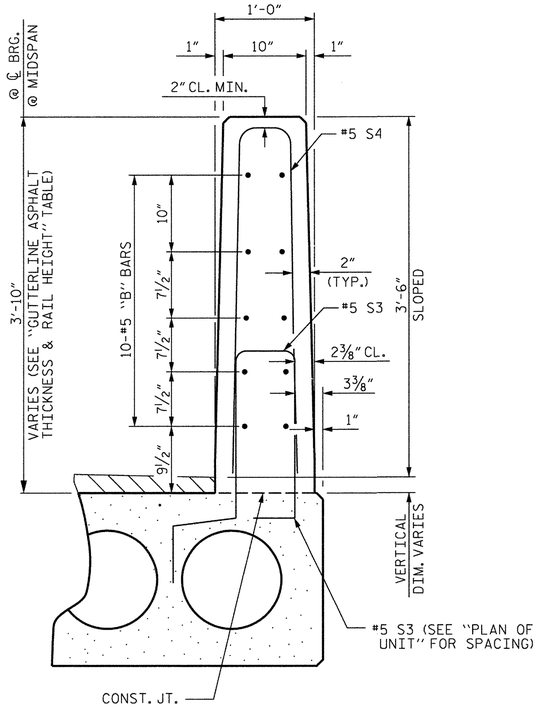

VERTICAL CONCRETE BARRIER RAIL SECTION

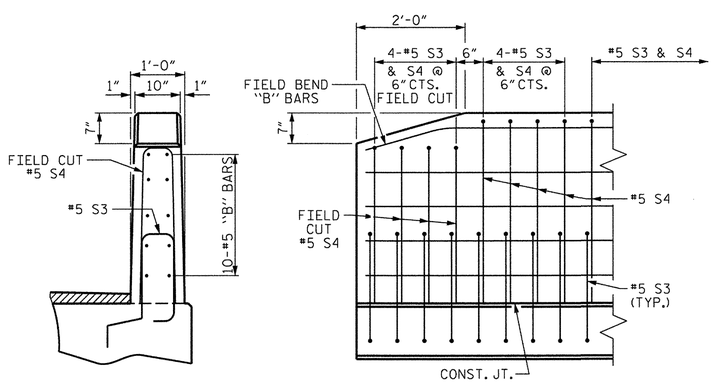

END VIEW

SIDE VIEW

END OF RAIL DETAILS

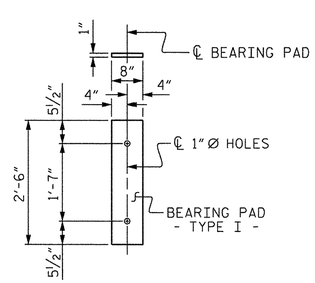

FIXED END
(TYPE I - 20 REQ'D)

ELASTOMERIC BEARING DETAILS

ELASTOMER IN ALL BEARINGS SHALL BE 50 DUROMETER HARDNESS.

BAR TYPES

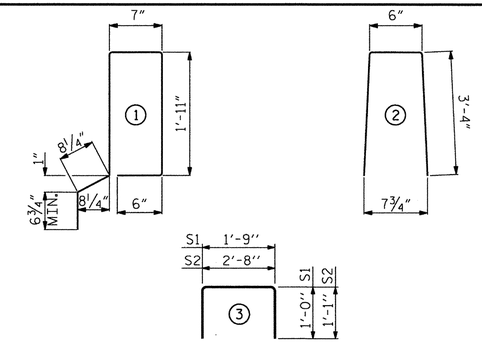

ALL BAR DIMENSIONS ARE OUT TO OUT

BILL OF MATERIAL FOR ONE 30' CORED SLAB UNIT

				EXTERIOR UNIT		INTERIOR UNIT	
BAR	NUMBER	SIZE	TYPE	LENGTH	WEIGHT	LENGTH	WEIGHT
B2	2	#4	STR	29'-8"	40	29'-8"	40
S1	8	#5	3	3'-9"	31	3'-9"	31
S2	64	#4	3	4'-10"	207	4'-10"	207
✳ S3	39	#5	1	6'-2"	251		
REINFORCING STEEL			LBS.		278		278
✳ EPOXY COATED REINFORCING STEEL			LBS.		251		
6000 P.S.I. CONCRETE			CU. YDS.		4.0		4.0
0.6" Ø L.R. STRANDS			No.		8		8

BILL OF MATERIAL FOR VERTICAL CONCRETE BARRIER RAIL

BAR	BARS PER PAIR OF EXTERIOR UNITS	TOTAL NO.	SIZE	TYPE	LENGTH	WEIGHT
	30' UNIT					
✳ B9	20	20	#5	STR	29'-7"	617
✳ S4	78	78	#5	2	7'-2"	583
✳ EPOXY COATED REINFORCING STEEL				LBS.		1200
CLASS AA CONCRETE				CU.YDS.		7.9
TOTAL VERTICAL CONCRETE BARRIER RAIL				LN. FT.		60.25

DEAD LOAD DEFLECTION AND CAMBER

	3'-0" x 1'-6"
30' CORED SLAB UNIT	0.6" Ø L.R. STRAND
CAMBER (SLAB ALONE IN PLACE)	5/16" ↑
DEFLECTION DUE TO SUPERIMPOSED DEAD LOAD ✳✳	1/16" ↓
FINAL CAMBER	1/4" ↑

✳✳ INCLUDES FUTURE WEARING SURFACE

CONCRETE RELEASE STRENGTH

UNIT	PSI
30'	4000

GUTTERLINE ASPHALT THICKNESS & RAIL HEIGHT

27'-10" CLEAR ROADWAY	ASPHALT OVERLAY THICKNESS	RAIL HEIGHT
	@ MID-SPAN	@ MID-SPAN
30' UNITS	3½"	3'-9¾"

NOTES

ALL PRESTRESSING STRANDS SHALL BE 7-WIRE LOW RELAXATION GRADE 270 STRANDS AND SHALL CONFORM TO AASHTO M203 EXCEPT FOR SAMPLING REQUIREMENTS WHICH SHALL BE IN ACCORDANCE WITH THE STANDARD SPECIFICATIONS.

ALL REINFORCING STEEL CAST WITH THE CORED SLAB SECTIONS SHALL BE GRADE 60 AND SHALL BE INCLUDED IN THE UNIT PRICE BID FOR PRESTRESSED CONCRETE CORED SLABS.

RECESSES FOR TRANSVERSE STRANDS SHALL BE GROUTED AFTER THE TENSIONING OF THE STRANDS.

THE 2½" Ø DOWEL HOLES AT FIXED ENDS OF SLAB SECTIONS SHALL BE FILLED WITH NON-SHRINK GROUT.

THE BACKER ROD SHALL CONFORM TO THE REQUIREMENTS OF TYPE M BOND BREAKER. SEE SECTION 1028 OF THE STANDARD SPECIFICATIONS.

WHEN CORED SLABS ARE CAST, AN INTERNAL HOLD-DOWN SYSTEM SHALL BE EMPLOYED TO PREVENT VOIDS FROM RISING OR MOVING SIDEWAYS. AT LEAST SIX WEEKS PRIOR TO CASTING CORED SLABS, THE CONTRACTOR SHALL SUBMIT TO THE ENGINEER FOR REVIEW AND COMMENT, DETAILED DRAWINGS OF THE PROPOSED HOLD-DOWN SYSTEM. IN ADDITION TO STRUCTURAL DETAILS, LOCATION AND SPACING OF THE HOLD-DOWNS SHALL BE INDICATED.

ALL REINFORCING STEEL IN THE VERTICAL CONCRETE BARRIER RAIL SHALL BE EPOXY COATED.

PRESTRESSING STRANDS SHALL BE CUT FLUSH WITH THE CORED SLAB UNIT ENDS.

APPLY EPOXY PROTECTIVE COATING TO CORED SLAB UNIT ENDS.

GROOVED CONTRACTION JOINTS, ½" IN DEPTH, SHALL BE TOOLED IN ALL EXPOSED FACES OF THE BARRIER RAIL AND IN ACCORDANCE WITH ARTICLE 825-10(B) OF THE STANDARD SPECIFICATIONS. A CONTRACTION JOINT SHALL BE LOCATED AT EACH THIRD POINT BETWEEN BARRIER RAIL EXPANSION JOINTS. ONLY ONE CONTRACTION JOINT IS REQUIRED AT MIDPOINT OF BARRIER RAIL SEGMENTS LESS THAN 20 FEET IN LENGTH AND NO CONTRACTION JOINTS ARE REQUIRED FOR THOSE SEGMENTS LESS THAN 10 FEET IN LENGTH.

TRANSVERSE POST TENSIONING OF THE CORED SLAB UNITS SHALL BE DONE IN ACCORDANCE WITH THE STANDARD SPECIFICATIONS.

THE TRANSFER OF LOAD FROM THE ANCHORAGES TO THE CORED SLAB UNIT SHALL BE DONE WHEN THE CONCRETE HAS REACHED A COMPRESSIVE STRENGTH OF NOT LESS THAN THE REQUIRED STRENGTH SHOWN IN THE "CONCRETE RELEASE STRENGTH" TABLE.

FOR GROUT FOR STRUCTURES, SEE SPECIAL PROVISIONS.

GRADE 270 STRANDS

	0.6" Ø L.R.
AREA (SQUARE INCHES)	0.217
ULTIMATE STRENGTH (LBS. PER STRAND)	58,600
APPLIED PRESTRESS (LBS. PER STRAND)	43,950

PROJECT NO. 17BP.14.R.9

HAYWOOD COUNTY

STATION: 12+34.68 -L-

SHEET 3 OF 3

STATE OF NORTH CAROLINA
DEPARTMENT OF TRANSPORTATION
RALEIGH

STANDARD
3'-0" X 1'-6"
PRESTRESSED CONCRETE
CORED SLAB UNIT
90° SKEW

NORTH CAROLINA PROFESSIONAL SEAL 36321 ENGINEER ROBERT F. DECOLA 7-25-13

ASSEMBLED BY : M. HOGAN	DATE : DEC. 2012		
CHECKED BY : R. DECOLA	DATE : DEC. 2012		
DRAWN BY : DGE 5/09	REV. 12/11	MAA/AAC	
CHECKED BY : BCH 6/09			

THE LOUIS BERGER GROUP, Inc.
1001 Wade Avenue, Suite 400
Raleigh, NC 27605-3322
NC COA No. F-0840

REVISIONS								
NO.	BY:	DATE:	NO.	BY:	DATE:	SHEET NO.	S-7
1			3			TOTAL SHEETS	13
2			4				

G:\OR Projects\OR1100 - NCDOT Group W\430061\Structures\430061_SD_PCS_03.dgn
$PLTDRVS$
7/25/2013
G:\CADD\Plot\OR1100\1100_rdy.tbl

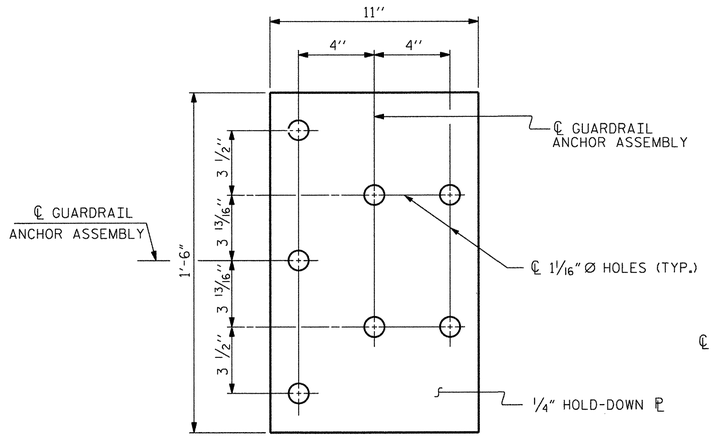

PLAN

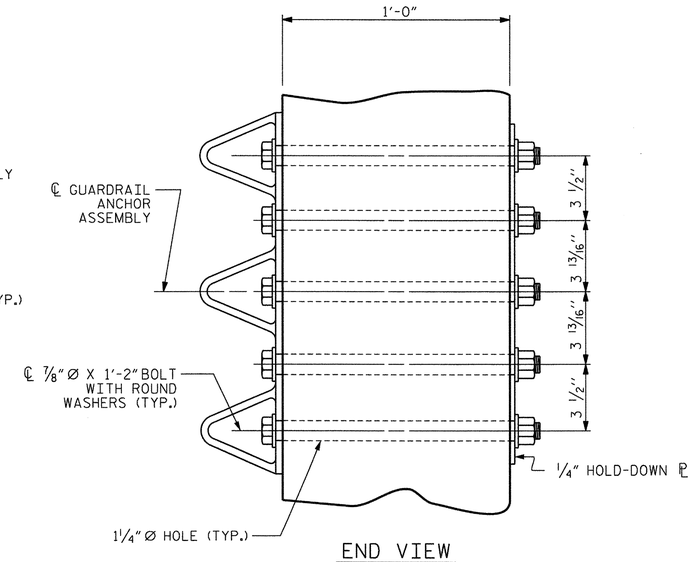

END VIEW

GUARDRAIL ANCHOR ASSEMBLY DETAILS

NOTES

THE GUARDRAIL ANCHOR ASSEMBLY SHALL CONSIST OF A 1/4" HOLD DOWN PLATE AND 7 - 7/8" Ø BOLTS WITH NUTS AND WASHERS.

THE HOLD-DOWN PLATE SHALL CONFORM TO AASHTO M270 GRADE 36. AFTER FABRICATION, THE HOLD-DOWN PLATE SHALL BE HOT-DIP GALVANIZED IN ACCORDANCE WITH AASHTO M111.

BOLTS SHALL CONFORM TO THE REQUIREMENTS OF ASTM A307 AND NUTS SHALL CONFORM TO THE REQUIREMENTS OF AASHTO M291. BOLTS, NUTS AND WASHERS SHALL BE GALVANIZED. (AT THE CONTRACTOR'S OPTION, STAINLESS STEEL BOLTS, NUTS AND WASHERS MAY BE USED AS AN ALTERNATE FOR THE 7/8" Ø GALVANIZED BOLTS, NUTS AND WASHERS. THEY SHALL CONFORM TO OR EXCEED THE MECHANICAL REQUIREMENTS OF ASTM A307. THE USE OF THIS ALTERNATE SHALL BE APPROVED BY THE ENGINEER.)

THE GUARDRAIL ANCHOR ASSEMBLY IS REQUIRED AT ALL POINTS WHERE APPROACH GUARDRAIL IS TO BE ATTACHED TO THE END OF BARRIER RAIL. FOR POINTS OF ATTACHMENT, SEE SKETCH.

AFTER INSTALLATION, THE EXPOSED THREAD OF THE BOLT SHALL BE BURRED WITH A SHARP POINTED TOOL.

THE COST OF THE GUARDRAIL ANCHOR ASSEMBLY SHALL BE INCLUDED IN THE UNIT CONTRACT PRICE BID FOR VERTICAL CONCRETE BARRIER RAIL.

THE VERTICAL REINFORCING BARS MAY BE SHIFTED SLIGHTLY IN THE VERTICAL CONCRETE BARRIER RAIL TO CLEAR ASSEMBLY BOLTS.

THE 1 1/4" Ø HOLES SHALL BE FORMED OR DRILLED WITH A CORE BIT. IMPACT TOOLS WILL NOT BE PERMITTED. ANY CONCRETE DAMAGED BY THIS WORK SHALL BE REPAIRED TO THE SATISFACTION OF THE ENGINEER.

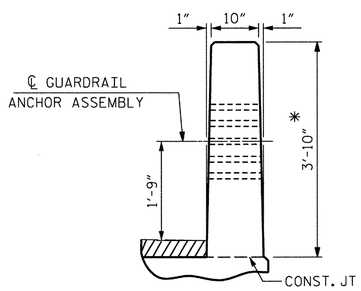

END VIEW

* BASED ON 3 3/4" WEARING SURFACE

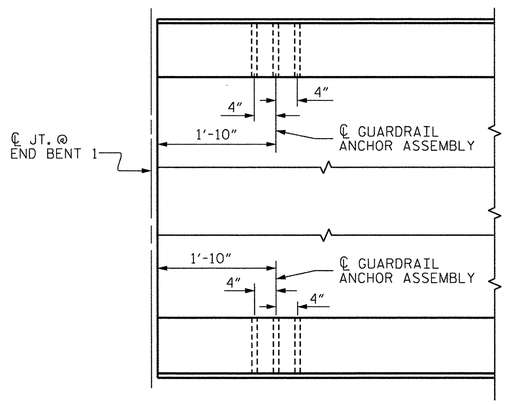

PLAN @ END BENT 1

(END BENT 2 SIMILAR)

LOCATION OF GUARDRAIL ANCHOR AT END POST

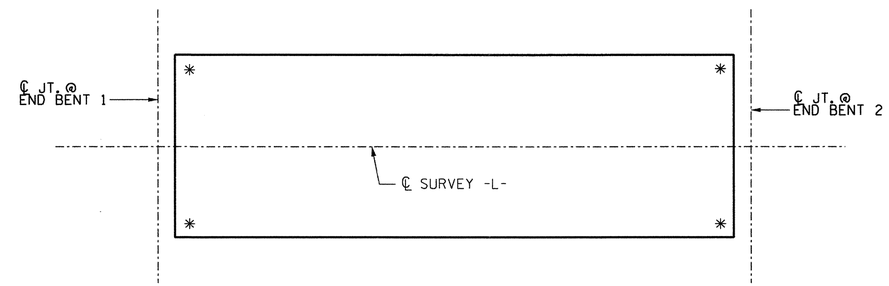

SKETCH SHOWING POINTS OF ATTACHMENT

* LOCATION OF GUARDRAIL ATTACHMENT

PROJECT NO. 17BP.14.R.9

HAYWOOD COUNTY

STATION: 12+34.68 -L-

STATE OF NORTH CAROLINA
DEPARTMENT OF TRANSPORTATION
RALEIGH

STANDARD

GUARDRAIL ANCHORAGE DETAILS FOR VERTICAL CONCRETE BARRIER RAIL

NORTH CAROLINA PROFESSIONAL ENGINEER SEAL 36321 ROBERT F. DeCOLA

DRAWN BY : MAA 5/10	ADDED 5/6/10		
CHECKED BY : GM 5/10	REV. 10/1/11	MAA/GM	
	REV. 12/5/11	MAA/GM	
DRAWN BY : M. HOGAN	DATE : DEC 2012		
CHECKED BY : R. DECOLA	DATE : DEC 2012		

THE LOUIS BERGER GROUP, Inc.
1001 Wade Avenue, Suite 400
Raleigh, NC 27605-3322
NC COA No. F-0840

REVISIONS						SHEET NO.
NO.	BY:	DATE:	NO.	BY:	DATE:	S-8
1			3			TOTAL SHEETS
2			4			13

STD. NO. GRA3

G:\OR Projects\OR1100 - NCDOT Group W\430061\Structures\430061_SD_GRA.dgn
$PLTDRV$ G:\CADD\Plot\OR1100\1100_rdy.tbl
7/25/2013

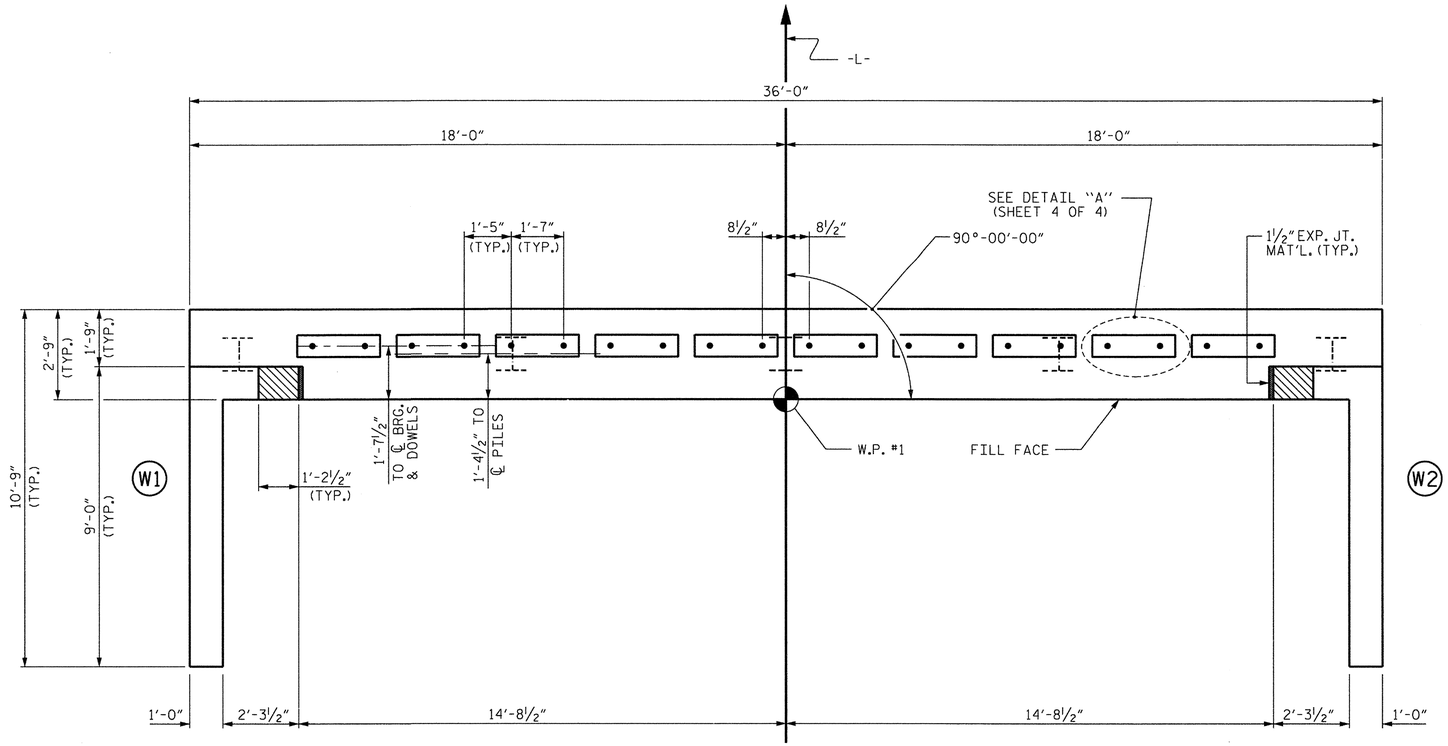

PLAN

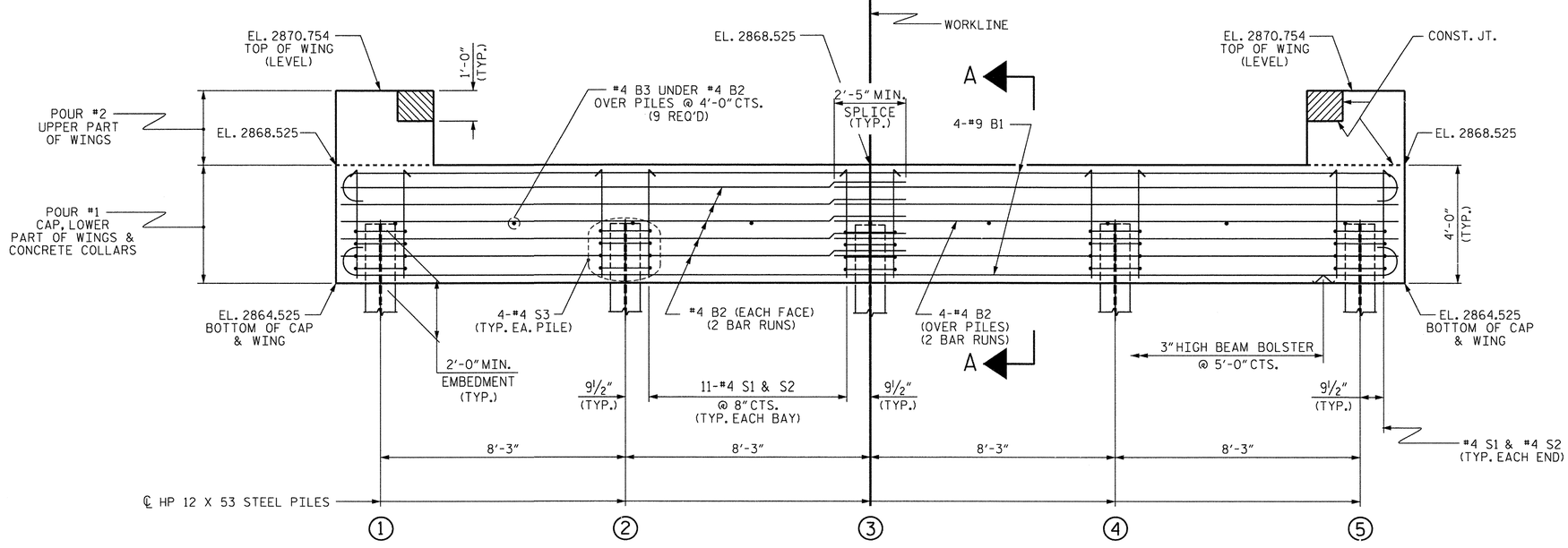

ELEVATION

WINGS NOT SHOWN FOR CLARITY.
FOR SECTION A-A, SEE SHEET 4 OF 4.
CONCRETE COLLARS FOR STEEL PILES NOT SHOWN IN PLAN AND ELEVATION VIEWS FOR CLARITY.
SEE "CORROSION PROTECTION FOR STEEL PILES DETAIL", SHEET 4 OF 4.

NOTES

STIRRUPS IN CAP MAY BE SHIFTED AS NECESSARY TO CLEAR DOWELS.

THE CONCRETE IN THE SHADED AREA OF THE WING SHALL BE POURED AFTER THE VERTICAL CONCRETE BARRIER RAIL IS CAST IF SLIP FORMING IS USED.

FOR PILE SPLICE DETAILS, SEE SHEET 4 OF 4.

FOR WING DETAILS, SEE SHEET 3 OF 4.

PROJECT NO. 17BP.14.R.9
HAYWOOD COUNTY
STATION: 12+34.68 -L-

SHEET 1 OF 4

STATE OF NORTH CAROLINA
DEPARTMENT OF TRANSPORTATION
RALEIGH

SUBSTRUCTURE

END BENT No. 1

NORTH CAROLINA PROFESSIONAL SEAL 36321 ENGINEER ROBERT F. DEROSA

ASSEMBLED BY : R. KNIGHT	DATE : APR. 2012
CHECKED BY : S. COOK	DATE : APR. 2012
DRAWN BY : DGE 02/10	
CHECKED BY : MKT 02/10	

THE LOUIS BERGER GROUP, Inc.
1001 Wade Avenue, Suite 400
Raleigh, NC 27605-3322
NC COA No. F-0840

REVISIONS						SHEET NO.
NO.	BY:	DATE:	NO.	BY:	DATE:	S-9
1			3			TOTAL SHEETS
2			4			13

G:\OR Projects\OR1100 - NCDOT Group W\430061\Structures\430061_SD_EB01.dgn
G:\CADD\Plot\OR1100\1100_rdy.tbl
$PLTDRVS$
7/25/2013

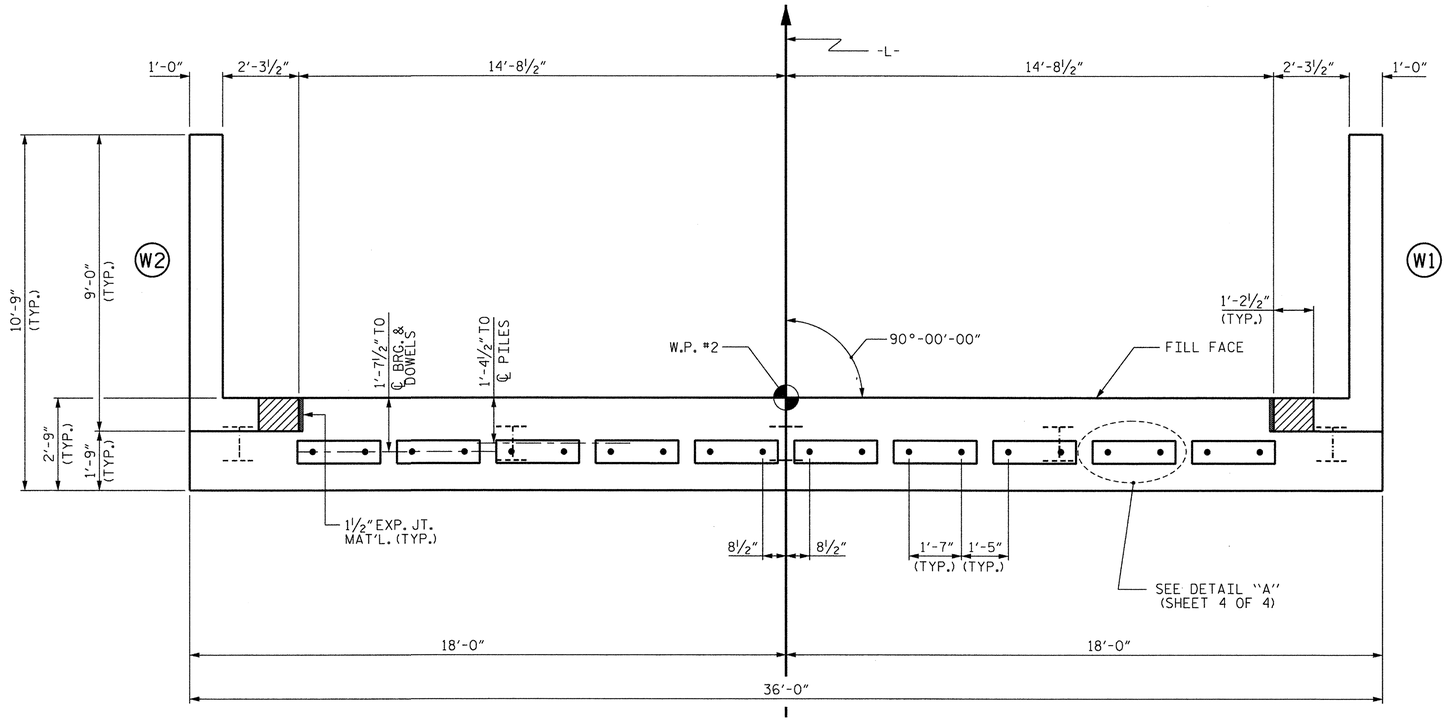

PLAN

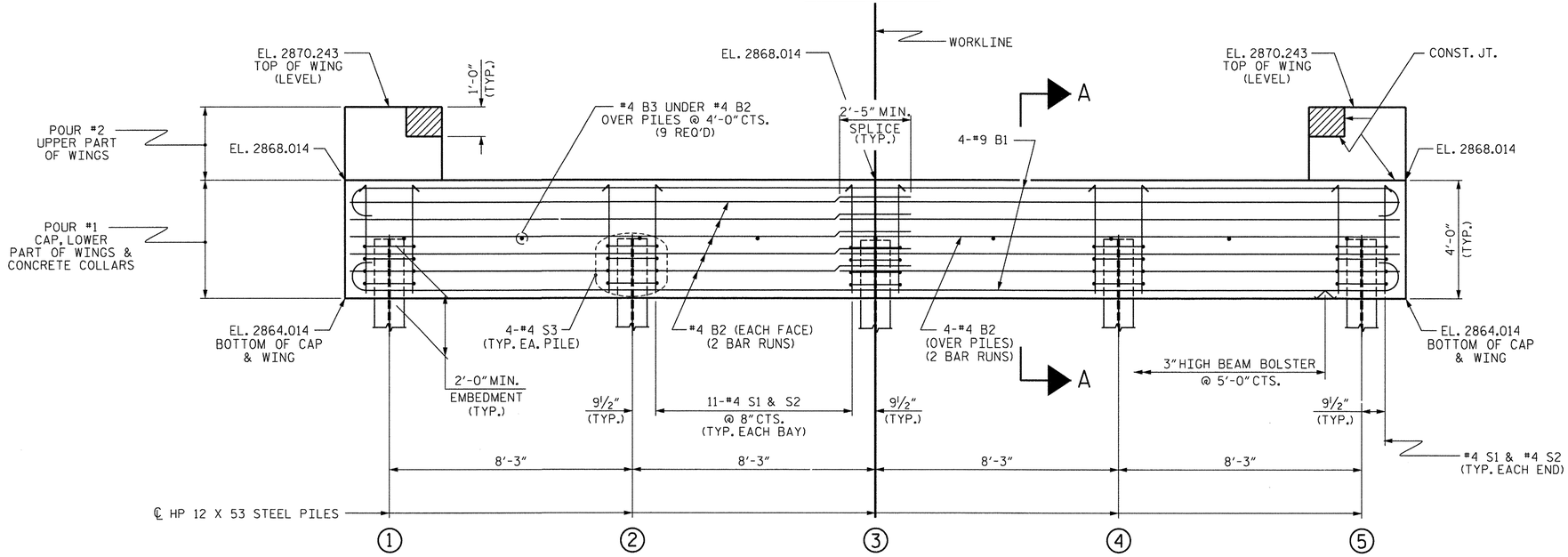

ELEVATION

WINGS NOT SHOWN FOR CLARITY.
FOR SECTION A-A, SEE SHEET 4 OF 4.
CONCRETE COLLARS FOR STEEL PILES NOT SHOWN IN PLAN AND ELEVATION VIEWS FOR CLARITY.
SEE "CORROSION PROTECTION FOR STEEL PILES DETAIL", SHEET 4 OF 4.

NOTES

STIRRUPS IN CAP MAY BE SHIFTED AS NECESSARY TO CLEAR DOWELS.

THE CONCRETE IN THE SHADED AREA OF THE WING SHALL BE POURED AFTER THE VERTICAL CONCRETE BARRIER RAIL IS CAST IF SLIP FORMING IS USED.

FOR PILE SPLICE DETAILS, SEE SHEET 4 OF 4.

FOR WING DETAILS, SEE SHEET 3 OF 4.

PROJECT NO. 17BP.14.R.9
HAYWOOD COUNTY
STATION: 12+34.68 -L-

SHEET 2 OF 4

STATE OF NORTH CAROLINA
DEPARTMENT OF TRANSPORTATION
RALEIGH

SUBSTRUCTURE

END BENT No. 2

NORTH CAROLINA PROFESSIONAL SEAL 36321 ENGINEER ROBERT F. DICOLA

ASSEMBLED BY :	R. KNIGHT	DATE APR. 2012	
CHECKED BY :	S. COOK	DATE APR. 2012	
DRAWN BY :	DGE	02/10	
CHECKED BY :	MKT	02/10	

THE LOUIS BERGER GROUP, Inc.
1001 Wade Avenue, Suite 400
Raleigh, NC 27605-3322
NC COA No. F-0840

REVISIONS						SHEET NO.
NO.	BY:	DATE:	NO.	BY:	DATE:	S-10
1			3			TOTAL SHEETS
2			4			13

G:\OR Projects\OR1100 - NCDOT Group W\430061\Structures\430061_SD_EB02.dgn
G:\CADD\Plot\OR1100\1100_rdy.tbl
$PLTDRVS$
7/25/2013

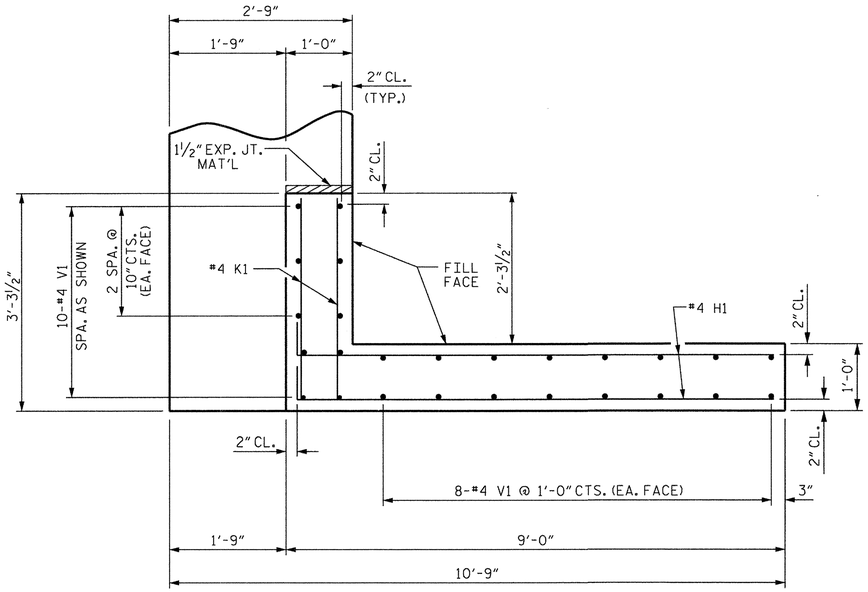

PLAN OF WING (W1)

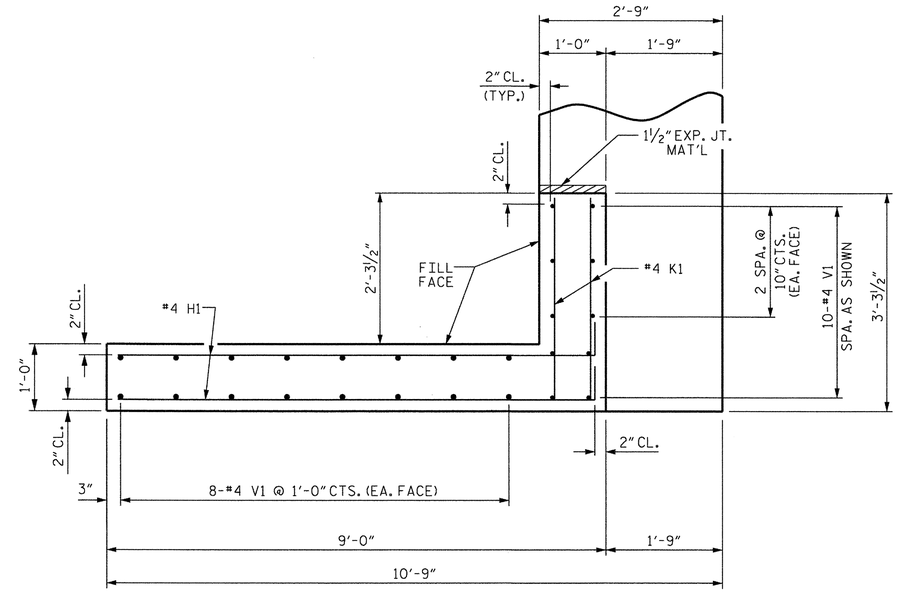

PLAN OF WING (W2)

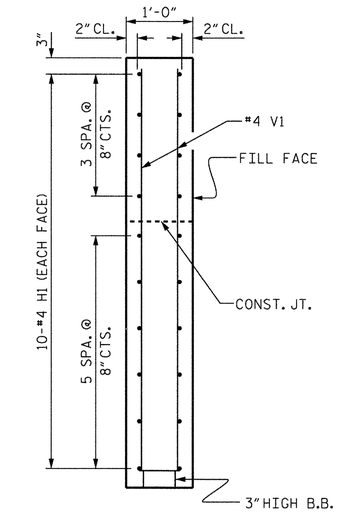

SECTION X-X

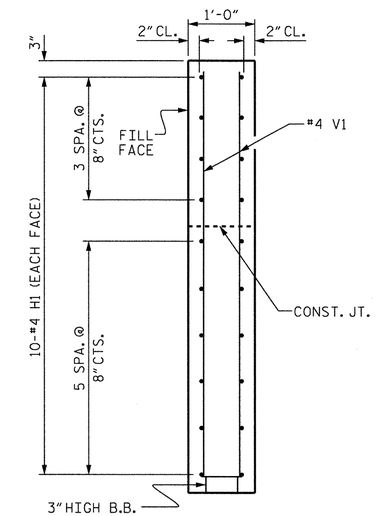

SECTION Y-Y

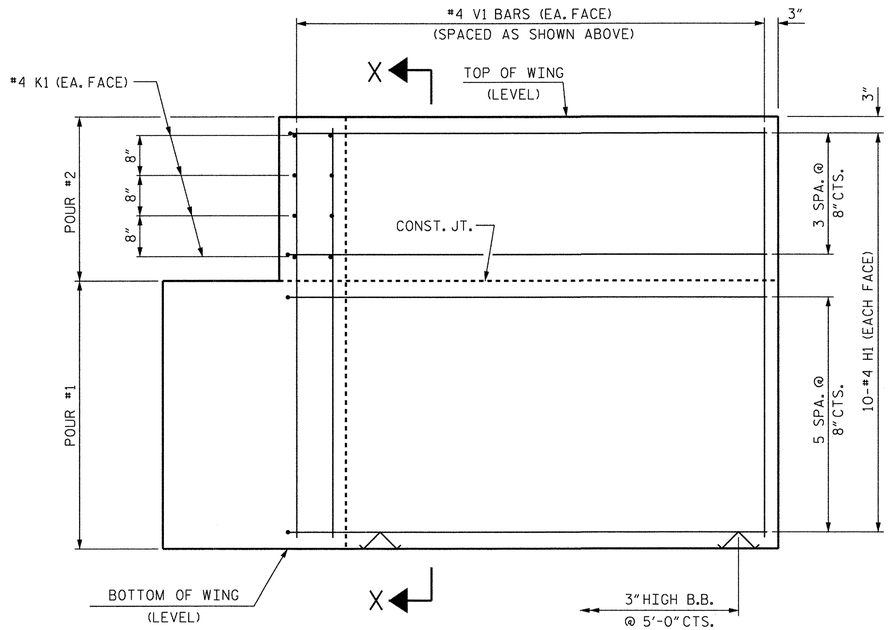

ELEVATION OF WING (W1)

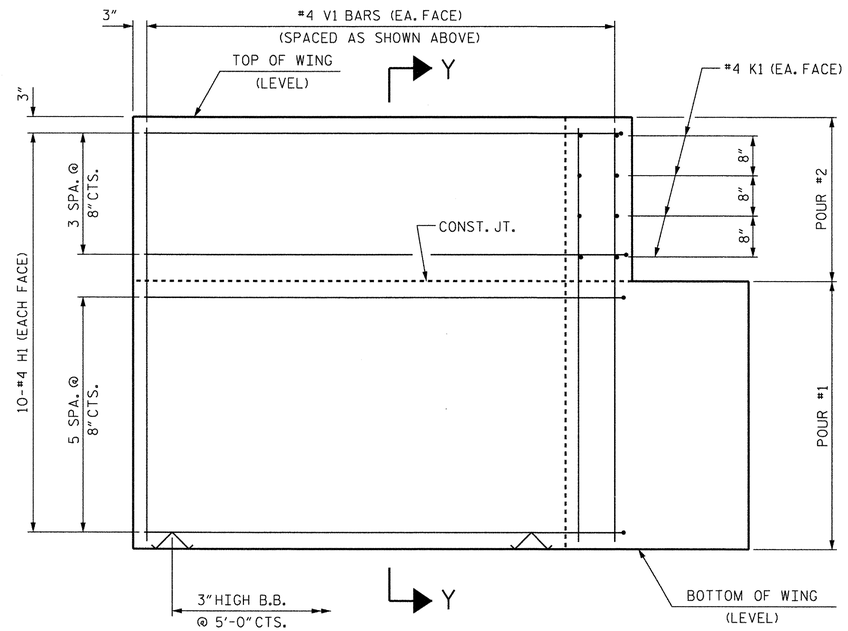

ELEVATION OF WING (W2)

WING DETAILS

PROJECT NO. 17BP.14.R.9

HAYWOOD COUNTY

STATION: 12+34.68 -L-

SHEET 3 OF 4

STATE OF NORTH CAROLINA
DEPARTMENT OF TRANSPORTATION
RALEIGH

SUBSTRUCTURE

END BENT
WING DETAILS

ASSEMBLED BY :	R. KNIGHT	DATE :	APR. 2012
CHECKED BY :	S. COOK	DATE :	APR. 2012
DRAWN BY :	DGE	02/10	
CHECKED BY :	MKT	02/10	

THE LOUIS BERGER GROUP, Inc.
1001 Wade Avenue, Suite 400
Raleigh, NC 27605-3322
NC COA No. F-0840

REVISIONS						
NO.	BY:	DATE:	NO.	BY:	DATE:	
1			3			
2			4			

SHEET NO. S-11

TOTAL SHEETS 13

G:\OR Projects\OR1100 - NCDOT Group W\430061\Structures\430061_SD_EB03.dgn
G:\CADD\Plot\OR1100\1100_rdy.tbl
$PLTDRVS$

$$$$$$SYSTTME$$$$$

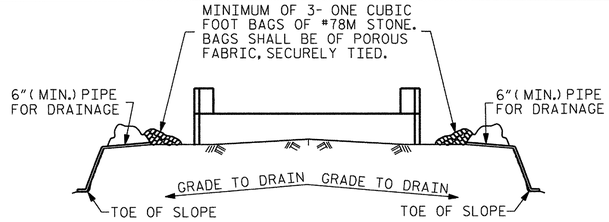

BAGGED STONE AND PIPE SHALL BE PLACED IMMEDIATELY AFTER COMPLETION OF END BENT EXCAVATION. PIPE MAY BE EITHER CONCRETE, CORRUGATED STEEL, CORRUGATED ALUMINUM ALLOY, OR CORRUGATED PLASTIC. PERFORATED PIPE WILL NOT BE ALLOWED.

BAGGED STONE SHALL REMAIN IN PLACE UNTIL THE ENGINEER DIRECTS THAT IT BE REMOVED. THE CONTRACTOR SHALL REMOVE AND DISPOSE OF SILT ACCUMULATIONS AT BAGGED STONE WHEN SO DIRECTED BY THE ENGINEER. BAGS SHALL BE REMOVED AND REPLACED WHENEVER THE ENGINEER DETERMINES THAT THEY HAVE DETERIORATED AND LOST THEIR EFFECTIVENESS.

NO SEPARATE PAYMENT WILL BE MADE FOR THIS WORK AND THE ENTIRE COST OF THIS WORK SHALL BE INCLUDED IN THE UNIT CONTRACT PRICE BID FOR THE SEVERAL PAY ITEMS.

TEMPORARY DRAINAGE AT END BENT

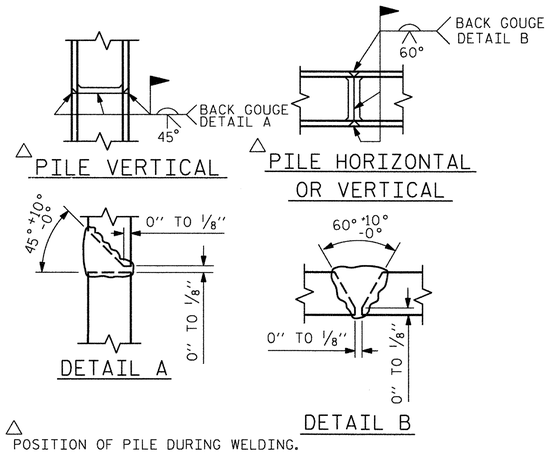

△ POSITION OF PILE DURING WELDING.

PILE SPLICE DETAILS

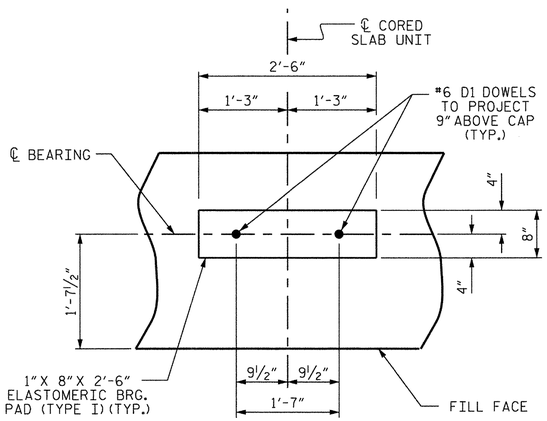

DETAIL "A"

(END BENT No. 1 SHOWN, END BENT No. 2 SIMILAR BY ROTATION)

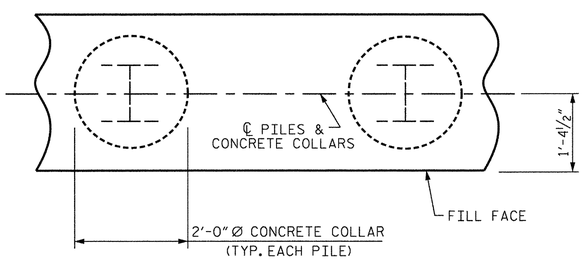

PLAN

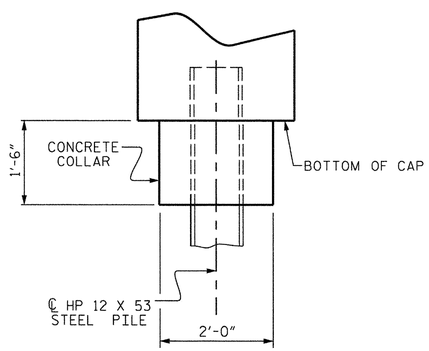

ELEVATION

CORROSION PROTECTION FOR STEEL PILES DETAIL

(END BENT No. 1 SHOWN, END BENT No. 2 SIMILAR BY ROTATION)

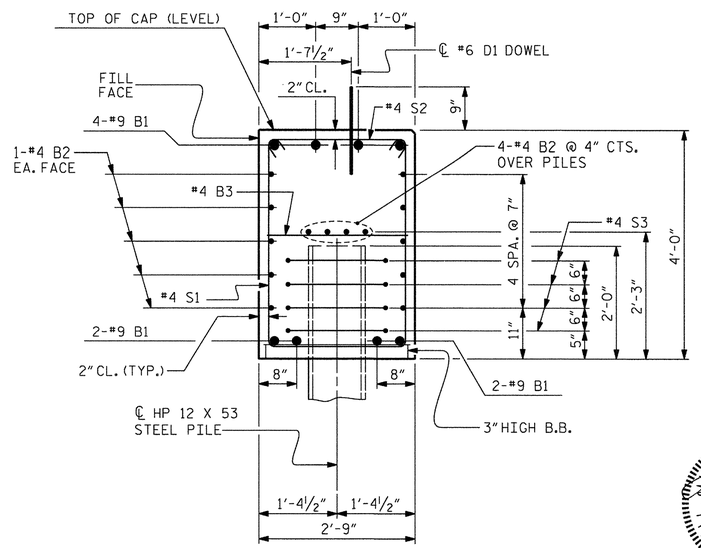

SECTION A-A

(CONCRETE COLLAR NOT SHOWN FOR CLARITY. SEE "CORROSION PROTECTION FOR STEEL PILES DETAIL.")

BAR TYPES

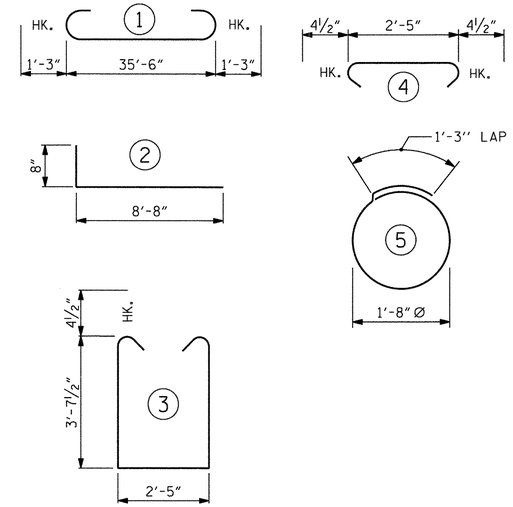

ALL BAR DIMENSIONS ARE OUT TO OUT.

END BENT No. 1	END BENT No. 2
HP 12 X 53 STEEL PILES	HP 12 X 53 STEEL PILES
NO: 5 LIN. FT.= 55	NO: 5 LIN. FT.= 45

BILL OF MATERIAL FOR ONE END BENT

BAR	NO.	SIZE	TYPE	LENGTH	WEIGHT
B1	8	#9	1	38'-0"	1034
B2	28	#4	STR	19'-1"	357
B3	9	#4	STR	2'-5"	15
D1	20	#6	STR	1'-6"	45
H1	40	#4	2	9'-4"	249
K1	16	#4	STR	2'-11"	31
S1	46	#4	3	10'-5"	320
S2	46	#4	4	3'-2"	97
S3	20	#4	5	6'-6"	87
V1	52	#4	STR	5'-6"	191

REINFORCING STEEL (FOR ONE END BENT) 2426 LBS.

CLASS A CONCRETE BREAKDOWN (FOR ONE END BENT)

POUR #1	CAP, LOWER PART OF WINGS & COLLARS	17.9 C.Y.
POUR #2	UPPER PART OF WINGS	1.5 C.Y.
TOTAL CLASS A CONCRETE		19.4 C.Y.

PROJECT NO. 17BP.14.R.9

HAYWOOD COUNTY

STATION: 12+34.68 -L-

SHEET 4 OF 4

STATE OF NORTH CAROLINA
DEPARTMENT OF TRANSPORTATION
RALEIGH

SUBSTRUCTURE

END BENT No. 1 & 2 DETAILS

NORTH CAROLINA PROFESSIONAL SEAL 36321 ENGINEER ROBERT F. DECOLA

THE LOUIS BERGER GROUP, Inc.
1001 Wade Avenue, Suite 400
Raleigh, NC 27605-3322
NC COA No. F-0840

REVISIONS								SHEET NO.
NO.	BY:	DATE:	NO.	BY:	DATE:			S-12
1			3					TOTAL SHEETS
2			4					13

ASSEMBLED BY :	R. KNIGHT	DATE :	APR. 2012
CHECKED BY :	R. DECOLA	DATE :	DEC. 2012
DRAWN BY : DGE	02/10		
CHECKED BY : MKT	02/10		

G:\OR Projects\OR1100 - NCDOT Group W\43006i\Structures\43006i_SD_EB04.dgn
G:\CADD\Plot\OR1100\1100_rdy.tbl
$PLTDRVS$
7/25/2013

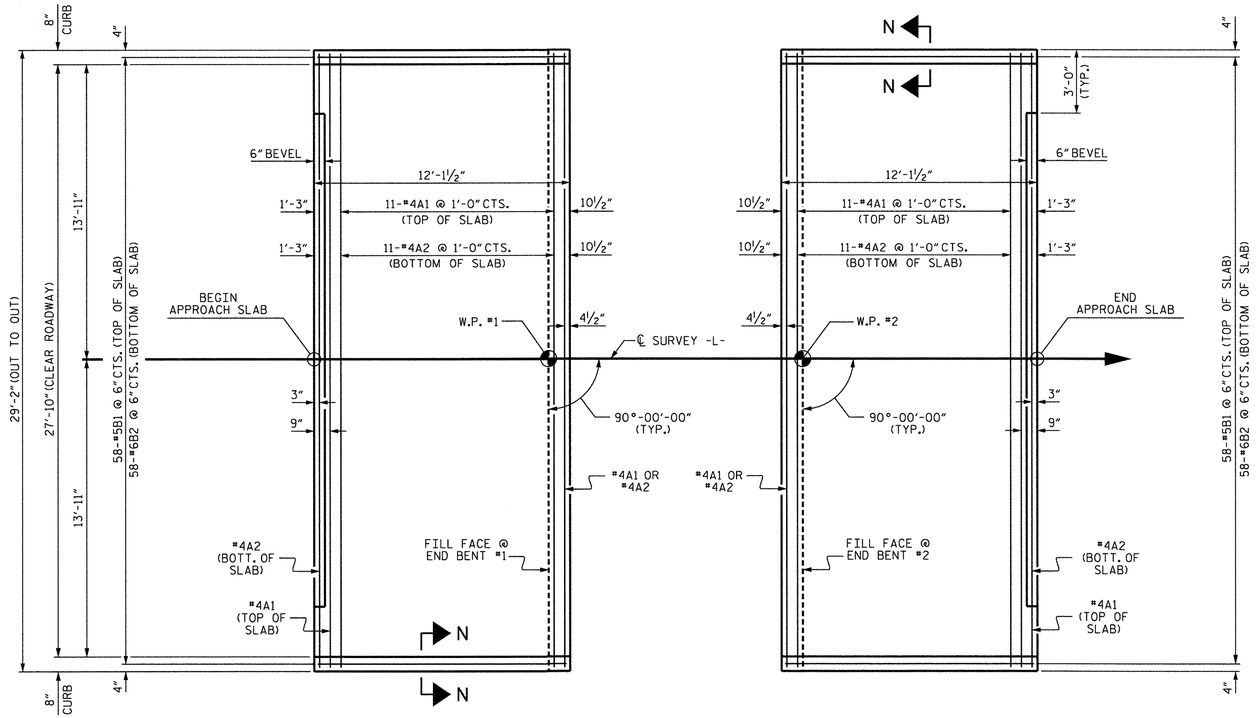

PLAN @ END BENT #1

PLAN @ END BENT #2

DIMENSIONS SHOWN ARE TYPICAL FOR BOTH APPROACH SLABS

NOTES

FOR BRIDGE APPROACH FILL INCLUDING GEOTEXTILE, 4" Ø DRAINAGE PIPE, AND #78M STONE BACKFILL, SEE ROADWAY PLANS.

GEOTEXTILE SHALL BE TYPE 1 IN ACCORDANCE WITH THE STANDARD SPECIFICATIONS SECTION 1056.

#78M STONE BACKFILL (CLASS V SELECT MATERIAL) SHALL BE IN ACCORDANCE WITH STANDARD SPECIFICATIONS SECTION 1016.

#78M STONE BACKFILL IS TO BE CONTINUOUS ALONG FILL FACE OF BACKWALL FROM OUTSIDE EDGE TO OUTSIDE EDGE OF APPROACH SLAB.

FOR THE 4" Ø DRAINAGE PIPE OUTLET(S), SEE ROADWAY STANDARD DRAWINGS.

AREA BETWEEN THE WINGWALL AND APPROACH SLAB SHALL BE GRADED TO DRAIN THE WATER AWAY FROM THE FILL FACE OF THE BRIDGE AND SHALL BE PAVED. SEE ROADWAY PLANS.

APPROACH SLAB GROOVING IS NOT REQUIRED.

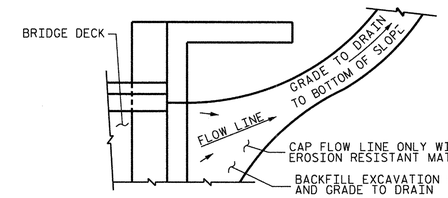

NOTE: IF THE APPROACH SLAB IS NOT CONSTRUCTED IMMEDIATELY AFTER THE BACKFILLING OF THE END BENT EXCAVATION, GRADE TO DRAIN TO THE BOTTOM OF THE SLOPE AND PROVIDE EROSION RESISTANT MATERIAL, SUCH AS FIBERGLASS ROVING OR AS DIRECTED BY THE ENGINEER TO PREVENT SOIL EROSION AND TO PROTECT THE AREA ADJACENT TO THE STRUCTURE. THE CONTRACTOR WILL BE REQUIRED TO REMOVE THESE MATERIALS PRIOR TO CONSTRUCTION OF THE APPROACH SLAB.

TEMPORARY DRAINAGE DETAIL

BILL OF MATERIAL

APPROACH SLAB AT EB #1

BAR	NO.	SIZE	TYPE	LENGTH	WEIGHT
✳ A1	13	#4	STR	28'-10"	250
A2	13	#4	STR	28'-10"	250
✳ B1	58	#5	STR	11'-2"	676
B2	58	#6	STR	11'-8"	1016
REINFORCING STEEL				LBS.	1266
✳ EPOXY COATED REINFORCING STEEL				LBS.	926
CLASS AA CONCRETE				C. Y.	15.7

APPROACH SLAB AT EB #2

BAR	NO.	SIZE	TYPE	LENGTH	WEIGHT
✳ A1	13	#4	STR	28'-10"	250
A2	13	#4	STR	28'-10"	250
✳ B1	58	#5	STR	11'-2"	676
B2	58	#6	STR	11'-8"	1016
REINFORCING STEEL				LBS.	1266
✳ EPOXY COATED REINFORCING STEEL				LBS.	926
CLASS AA CONCRETE				C. Y.	15.7

SPLICE LENGTHS

BAR SIZE	EPOXY COATED	UNCOATED
#4	2'-0"	1'-9"
#5	2'-6"	2'-2"
#6	3'-10"	2'-7"

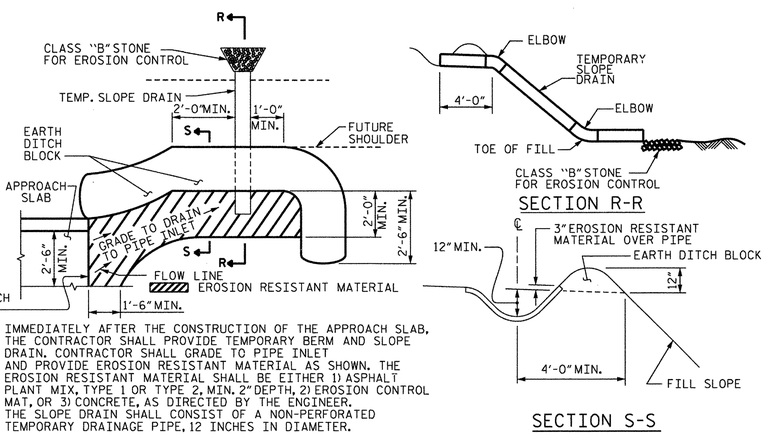

NOTE: IMMEDIATELY AFTER THE CONSTRUCTION OF THE APPROACH SLAB, THE CONTRACTOR SHALL PROVIDE TEMPORARY BERM AND SLOPE DRAIN. CONTRACTOR SHALL GRADE TO PIPE INLET AND PROVIDE EROSION RESISTANT MATERIAL AS SHOWN. THE EROSION RESISTANT MATERIAL SHALL BE EITHER 1) ASPHALT PLANT MIX, TYPE 1 OR TYPE 2, MIN. 2" DEPTH, 2) EROSION CONTROL MAT, OR 3) CONCRETE, AS DIRECTED BY THE ENGINEER. THE SLOPE DRAIN SHALL CONSIST OF A NON-PERFORATED TEMPORARY DRAINAGE PIPE, 12 INCHES IN DIAMETER.

PLAN VIEW

TEMPORARY BERM AND SLOPE DRAIN DETAILS

(TO BE USED WHEN SHOULDER BERM GUTTER IS REQUIRED)

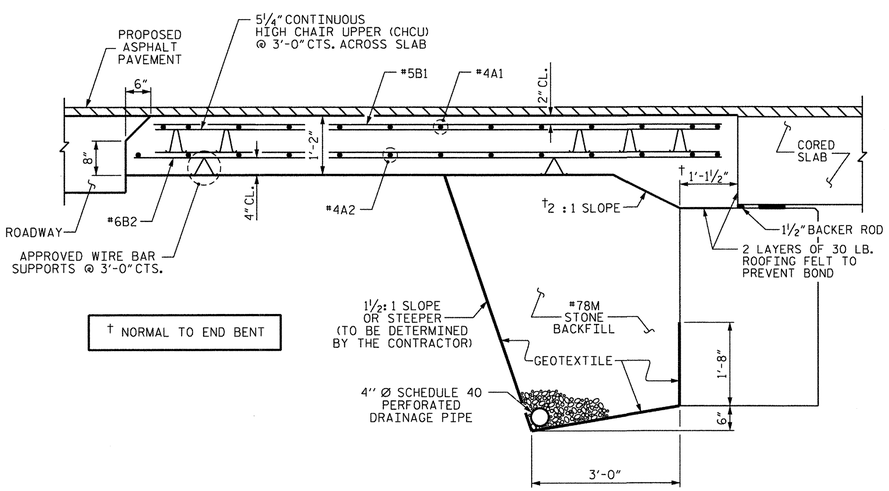

SECTION THRU SLAB

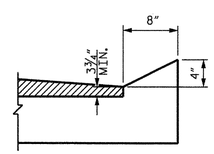

SECTION N-N

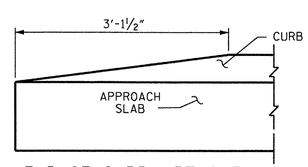

END OF CURB WITHOUT SHOULDER BERM GUTTER

CURB DETAILS

PROJECT NO. 17BP.14.R.9

HAYWOOD COUNTY

STATION: 12+34.68 -L-

STATE OF NORTH CAROLINA
DEPARTMENT OF TRANSPORTATION
RALEIGH

STANDARD
BRIDGE APPROACH SLAB
FOR PRESTRESSED CONCRETE
CORED SLAB UNIT
(SUB-REGIONAL TIER)
90° SKEW

NORTH CAROLINA PROFESSIONAL SEAL 36321 ENGINEER ROBERT F. DECOLA

THE LOUIS BERGER GROUP, Inc.
1001 Wade Avenue, Suite 400
Raleigh, NC 27605-3322
NC COA No. F-0840

REVISIONS								SHEET NO.
NO.	BY:	DATE:	NO.	BY:	DATE:			S-13
1			3					TOTAL SHEETS
2			4					13

ASSEMBLED BY :	R. KNIGHT	DATE : APR. 2012	
CHECKED BY :	S. COOK	DATE : APR. 2012	
DRAWN BY : SHS/MAA 5-09		REV. 12-11	MAA/AAC
CHECKED BY : BCH 5-09			

G:\OR Projects\OR1100 - NCDOT Group W\430061\Structures\430061_SD_AS_01.dgn
G:\CADD\Plot\OR1100\1100_rdy.tbl
$PLTDRVS$
7/25/2013

STANDARD NOTES

DESIGN DATA:

SPECIFICATIONS	A.A.S.H.T.O. (CURRENT)
LIVE LOAD	SEE PLANS
IMPACT ALLOWANCE	SEE A.A.S.H.T.O.
STRESS IN EXTREME FIBER OF	
STRUCTURAL STEEL - AASHTO M270 GRADE 36	20,000 LBS. PER SQ. IN.
- AASHTO M270 GRADE 50W	27,000 LBS. PER SQ. IN.
- AASHTO M270 GRADE 50	27,000 LBS. PER SQ. IN.
REINFORCING STEEL IN TENSION	
GRADE 60	24,000 LBS. PER SQ. IN.
CONCRETE IN COMPRESSION	1,200 LBS. PER SQ. IN.
CONCRETE IN SHEAR	SEE A.A.S.H.T.O.
STRUCTURAL TIMBER - TREATED OR	
UNTREATED - EXTREME FIBER STRESS	1,800 LBS. PER SQ. IN.
COMPRESSION PERPENDICULAR TO GRAIN OF TIMBER	375 LBS. PER SQ. IN.
EQUIVALENT FLUID PRESSURE OF EARTH	30 LBS. PER CU. FT. (MINIMUM)

MATERIAL AND WORKMANSHIP:

EXCEPT AS MAY OTHERWISE BE SPECIFIED ON PLANS OR IN THE SPECIAL PROVISIONS, ALL MATERIAL AND WORKMANSHIP SHALL BE IN ACCORDANCE WITH THE 2006 "STANDARD SPECIFICATIONS FOR ROADS AND STRUCTURES" OF THE N. C. DEPARTMENT OF TRANSPORTATION.

STEEL SHEET PILING FOR PERMANENT OR TEMPORARY APPLICATIONS SHALL BE HOT ROLLED.

CONCRETE:

UNLESS OTHERWISE REQUIRED ON PLANS, CLASS A CONCRETE SHALL BE USED FOR ALL PORTIONS OF ALL STRUCTURES WITH THE EXCEPTION THAT: CLASS AA CONCRETE SHALL BE USED IN BRIDGE SUPERSTRUCTURES, ABUTMENT BACKWALLS, AND APPROACH SLABS; AND CLASS B CONCRETE SHALL BE USED FOR SLOPE PROTECTION AND RIP RAP.

CONCRETE CHAMFERS:

UNLESS OTHERWISE NOTED ON THE PLANS, ALL EXPOSED CORNERS ON STRUCTURES SHALL BE CHAMFERED 3/4" WITH THE FOLLOWING EXCEPTIONS: TOP CORNERS OF CURBS MAY BE ROUNDED TO 1-1/2" RADIUS WHICH IS BUILT INTO CURB FORMS; CORNERS OF TRANSVERSE FLOOR EXPANSION JOINTS SHALL BE ROUNDED WITH A 1/4" FINISHING TOOL UNLESS OTHERWISE REQUIRED ON PLANS; AND CORNERS OF EXPANSION JOINTS IN THE ROADWAY FACES AND TOPS OF CURBS AND SIDEWALKS SHALL BE ROUNDED TO A 1/4" RADIUS WITH A FINISHING STONE OR TOOL UNLESS OTHERWISE REQUIRED ON PLANS.

DOWELS:

DOWELS WHEN INDICATED ON PLANS AS FOR CULVERT EXTENSIONS, SHALL BE EMBEDDED AT LEAST 12" INTO THE OLD CONCRETE AND GROUTED INTO PLACE WITH 1:2 CEMENT MORTAR.

ALLOWANCE FOR DEAD LOAD DEFLECTION, SETTLEMENT, ETC. IN CASTING SUPERSTRUCTURES:

BRIDGES SHALL BE BUILT ON THE GRADE OR VERTICAL CURVE SHOWN ON PLANS. SLABS, CURBS AND PARAPETS SHALL CONFORM TO THE GRADE OR CURVE.

ALL DIMENSIONS WHICH ARE GIVEN IN SECTION AND ARE AFFECTED BY DEAD LOAD DEFLECTIONS ARE DIMENSIONS AT CENTER LINE OF BEARING UNLESS OTHERWISE NOTED ON PLANS. IN SETTING FORMS FOR STEEL BEAM BRIDGES AND PRESTRESSED CONCRETE GIRDER BRIDGES, ADJUSTMENTS SHALL BE MADE DUE TO THE DEAD LOAD DEFLECTIONS FOR THE ELEVATIONS SHOWN. WHERE BLOCKS ARE SHOWN OVER BEAMS FOR BUILDING UP TO THE SLAB, THE VERTICAL DIMENSIONS OF THE BLOCKS SHALL BE ADJUSTED BETWEEN BEARINGS TO COMPENSATE FOR DEAD LOAD DEFLECTIONS, VERTICAL CURVE ORDINATE, AND ACTUAL BEAM CAMBER. WHERE BOTTOM OF SLAB IS IN LINE WITH BOTTOM OF TOP FLANGES, DEPTH OF SLAB BETWEEN BEARINGS SHALL BE ADJUSTED TO COMPENSATE FOR DEAD LOAD DEFLECTION, VERTICAL CURVE ORDINATE, AND ACTUAL BEAM CAMBER.

IN SETTING FALSEWORK AND FORMS FOR REINFORCED CONCRETE SPANS, AN ALLOWANCE SHALL BE MADE FOR DEAD LOAD DEFLECTIONS, SETTLEMENT OF FALSEWORK, AND PERMANENT CAMBER WHICH SHALL BE PROVIDED FOR IN ADDITION TO THE ELEVATIONS SHOWN. AFTER REMOVAL OF THE FALSEWORK, THE FINISHED STRUCTURES SHALL CONFORM TO THE PROFILE AND ELEVATIONS SHOWN ON THE PLANS AND CONSTRUCTION ELEVATIONS FURNISHED BY THE ENGINEER.

DETAILED DRAWINGS FOR FALSEWORK OR FORMS FOR BRIDGE SUPERSTRUCTURE AND ANY STRUCTURE OR PARTS OF A STRUCTURE AS NOTED ON THE PLANS SHALL BE SUBMITTED TO THE ENGINEER FOR APPROVAL BEFORE CONSTRUCTION OF THE FALSEWORK OR FORMS IS STARTED.

REINFORCING STEEL:

ALL REINFORCING STEEL SHALL BE DEFORMED. DIMENSIONS RELATIVE TO PLACEMENT OF REINFORCING ARE TO CENTERS OF BARS UNLESS OTHERWISE INDICATED IN THE PLANS. DIMENSIONS ON BAR DETAILS ARE TO CENTERS OF BARS OR ARE OUT TO OUT AS INDICATED ON PLANS.

WIRE BAR SUPPORTS SHALL BE PROVIDED FOR REINFORCING STEEL WHERE INDICATED ON THE PLANS. WHEN BAR SUPPORT PIECES ARE PLACED IN CONTINUOUS LINES, THEY SHALL BE SO PLACED THAT THE ENDS OF THE SUPPORTING WIRES SHALL BE LAPPED TO LOCK LEGS ON ADJOINING PIECES.

STRUCTURAL STEEL:

AT THE CONTRACTOR'S OPTION, HE MAY SUBSTITUTE 7/8" Ø SHEAR STUDS FOR THE 3/4" Ø STUDS SPECIFIED ON THE PLANS. THIS SUBSTITUTION SHALL BE MADE AT THE RATE OF 3 - 7/8" Ø STUDS FOR 4 - 3/4" Ø STUDS, AND STUD SPACING CHANGES SHALL BE MADE AS NECESSARY TO PROVIDE THE SAME EQUIVALENT NUMBER OF 7/8" Ø STUDS ALONG THE BEAM AS SHOWN FOR 3/4" Ø STUDS BASED ON THE RATIO OF 3 - 7/8" Ø STUDS FOR 4 - 3/4" Ø STUDS. STUDS OF THE LENGTH SPECIFIED ON THE PLANS MUST BE PROVIDED. THE MAXIMUM SPACING SHALL BE 2'-0".

EXCEPT AT THE INTERIOR SUPPORTS OF CONTINUOUS BEAMS WHERE THE COVER PLATE IS IN CONTACT WITH BEARING PLATE, THE CONTRACTOR MAY, AT HIS OPTION, SUBSTITUTE FOR THE COVER PLATES DESIGNATED ON THE PLANS COVER PLATES OF THE EQUIVALENT AREA PROVIDED THESE PLATES ARE AT LEAST 5/16" IN THICKNESS AND DO NOT EXCEED A WIDTH EQUAL TO THE FLANGE WIDTH LESS 2" OR A THICKNESS EQUAL TO 2 TIMES THE FLANGE THICKNESS. THE SIZE OF FILLET WELDS SHALL CONFORM TO THE REQUIREMENTS OF THE CURRENT ANSI/AASHTO/AWS "BRIDGE WELDING CODE". ELECTROSLAG WELDING WILL NOT BE PERMITTED.

WITH THE SOLE EXCEPTION OF EDGES AT SURFACES WHICH BEAR ON OTHER SURFACES, ALL SHARP EDGES AND ENDS OF SHAPES AND PLATES SHALL BE SLIGHTLY ROUNDED BY SUITABLE MEANS TO A RADIUS OF APPROXIMATELY 1/16 INCH OR EQUIVALENT FLAT SURFACE AT A SUITABLE ANGLE PRIOR TO PAINTING, GALVANIZING, OR METALLIZING.

HANDRAILS AND POSTS:

METAL STANDARDS AND FACES OF THE CONCRETE END POSTS FOR THE METAL RAIL SHALL BE SET NORMAL TO THE GRADE OF THE CURB, UNLESS OTHERWISE SHOWN ON PLANS. THE METAL RAIL AND TOPS OF CONCRETE POSTS USED WITH THE ALUMINUM RAIL SHALL BE BUILT PARALLEL TO THE GRADE OF THE CURB.

METAL HANDRAILS SHALL BE IN ACCORDANCE WITH THE PLANS. RAILS SHALL BE AS MANUFACTURED FOR BRIDGE RAILING. CASTINGS SHALL BE OF A UNIFORM APPEARANCE. FINS AND OTHER DEFORMATIONS RESULTING FROM CASTING OR OTHERWISE SHALL BE REMOVED IN A MANNER SO THAT A UNIFORM COLORING OF THE COMPLETED CASTING SHALL BE OBTAINED. CASTINGS WITH DISCOLORATIONS OR OF NON-UNIFORM COLORING WILL NOT BE ACCEPTED. CERTIFIED MILL REPORTS ARE REQUIRED FOR METAL RAILS AND POSTS.

SPECIAL NOTES:

GENERALLY, IN CASE OF DISCREPANCY, THIS STANDARD SHEET OF NOTES SHALL GOVERN OVER THE SPECIFICATIONS, BUT THE REMAINDER OF THE PLANS SHALL GOVERN OVER NOTES HEREON, AND SPECIAL PROVISIONS SHALL GOVERN OVER ALL. SEE SPECIFICATIONS ARTICLE 105-4.

ENGLISH

JANUARY, 1990

STD. NO. SN

G:\OR Projects\OR1100 - NCDOT Group W\430061\Structures\430061_SD_SN.dgn
7/25/2013 4:32:20 PM $PLTDRVS$ G:\CADD\Plot\OR1100\1100_rdy.tbl

REV. 6-16-95 EEM (W) RGW REV. 5-7-03 RWW (W) JTE