TIP PROJECT: BD-5114M

CONTRACT: DN00080

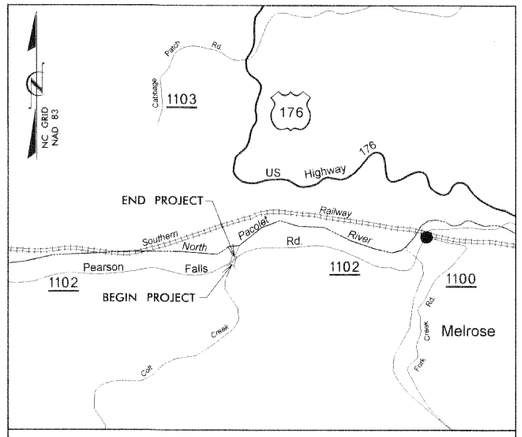

VICINITY MAP

STATE OF NORTH CAROLINA
DIVISION OF HIGHWAYS

POLK COUNTY

LOCATION: BRIDGE NO. 3 OVER COLT CREEK ON SR 1102 (PEARSON FALLS RD.)

TYPE OF WORK: GRADING, DRAINAGE, PAVING AND STRUCTURE

STATE	STATE PROJECT REFERENCE NO.	SHEET NO.	TOTAL SHEETS
N.C.	BD-5114M	1	

STATE PROJ. NO.	F.A. PROJ. NO.	DESCRIPTION
45360.1.13	BRZ-1102(9)	P.E.
45360.2.13	BRZ-1102(9)	R/W
45360.3.13	BRZ-1102(9)	CONST.

4

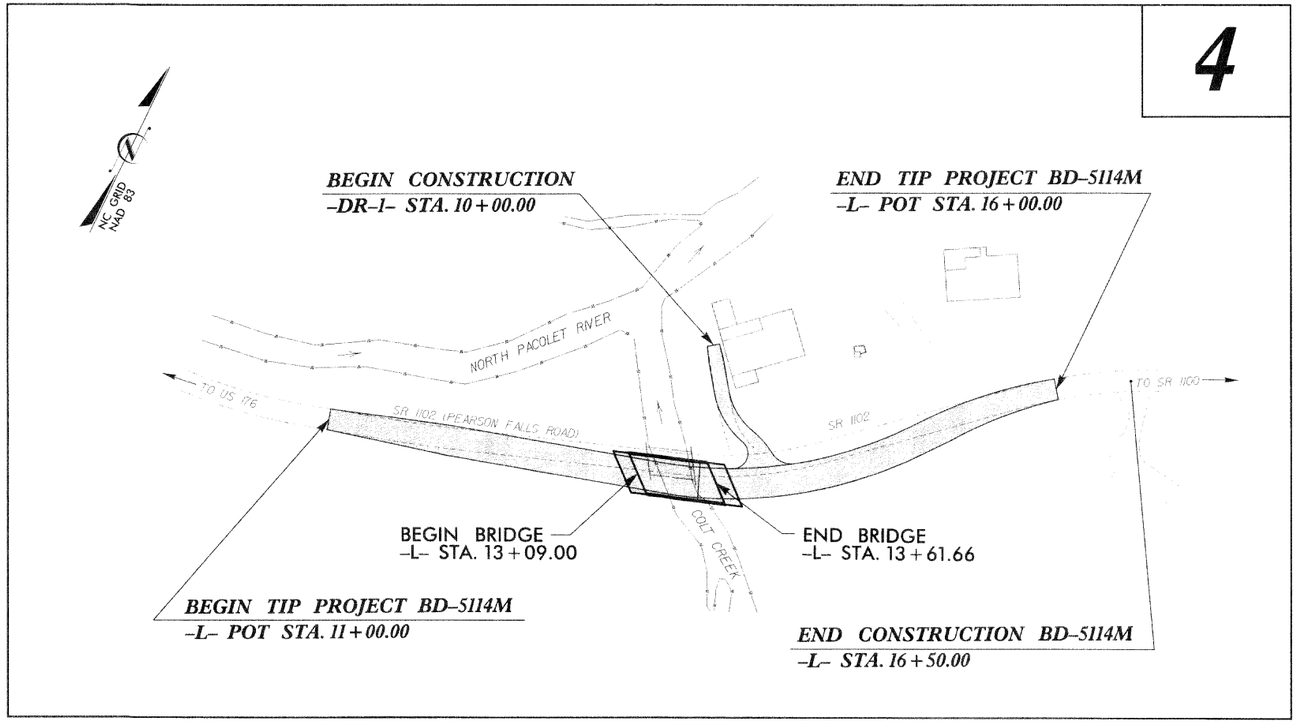

V&M
Vaughn & Melton
Consulting Engineers
Asheville, North Carolina 828-253-2796
Charlotte, North Carolina 704-357-0486
Tri-Cities, Tennessee 423-467-8401
Knoxville, Tennessee 865-546-5805
Middlesboro, Kentucky 606-248-6600
Spartanburg, South Carolina 864-574-4175

Copyright © 2006 Vaughn & Melton, Inc. All Rights Reserved

GRAPHIC SCALES

30 15 0 30 60
PLANS

30 15 0 30 60
PROFILE (HORIZONTAL)

6 3 0 6 12
PROFILE (VERTICAL)

DESIGN DATA

ADT 2008 = 250
ADT 2025 = 500

T = 6 %
V = 55 MPH

FUNC CLASS = RURAL LOCAL

PROJECT LENGTH

LENGTH ROADWAY TIP PROJECT BD-5114M = .085 MI.
LENGTH STRUCTURE TIP PROJECT BD-5114M = .010 MI.
TOTAL LENGTH OF TIP PROJECT BD-5114M = .095 MI.

Prepared In the Office of:
VAUGHN & MELTON
1318-F PATTON AVE.
ASHEVILLE NC, 28806
FOR THE NORTH CAROLINA DIVISION OF HIGHWAYS

2012 STANDARD SPECIFICATIONS

RIGHT OF WAY DATE:
OCTOBER 31, 2011

LETTING DATE:
AUGUST 28, 2012

HARDY WILLIS, PE
PROJECT ENGINEER

AARON CARVER, PE
PROJECT DESIGN ENGINEER

NCDOT CONTACT:
JOSH DEYTON, PE
PROJECT ENGINEER - ROADWAY DESIGN

HYDRAULICS ENGINEER

NORTH CAROLINA PROFESSIONAL SEAL 033023 ENGINEER BRADLEY S. RIDNOUR

7-2-12
Bradley S Ridnour, PE P.E.
SIGNATURE:

ROADWAY DESIGN ENGINEER

NORTH CAROLINA PROFESSIONAL SEAL 030453 ENGINEER AARON C. CARVER

7-2-12
P.E.
SIGNATURE:

DIVISION OF HIGHWAYS
STATE OF NORTH CAROLINA

STATE OF NORTH CAROLINA DEPARTMENT OF TRANSPORTATION

PROJECT REFERENCE NO.	SHEET NO.
BD-5114M	1-A

ROADWAY DESIGN ENGINEER

NORTH CAROLINA PROFESSIONAL SEAL 030453 ENGINEER AARON C. CARVER 7-6-12

INDEX OF SHEETS

SHEET NUMBER	SHEET
1	TITLE SHEET
1-A	INDEX OF SHEETS, GENERAL NOTES, AND LIST OF STANDARD DRAWINGS
1-B	CONVENTIONAL SYMBOLS
1-C	SURVEY CONTROL SHEET
2	PAVEMENT SCHEDULE AND TYPICAL SECTIONS
3	SUMMARY OF QUANTITIES
3A	SUMMARY OF DRAINAGE QUANTITIES, SUMMARY OF GUARDRAIL, AND ASPHALT PAVEMENT REMOVAL SUMMARY
3B	EARTHWORK SUMMARY
4	PLAN AND PROFILE SHEET
TMP-1 THRU TMP-4	TRAFFIC MANAGEMENT PLANS
SIG-1	SIGNAL PLAN
EC-1 THRU EC-2	EROSION CONTROL PLANS
X-0	CROSS-SECTION SUMMARY
X-1 THRU X-9	CROSS-SECTIONS
S-1 THRU S-21	STRUCTURE PLANS

GENERAL NOTES:

2012 SPECIFICATIONS
EFFECTIVE: 01-17-2012

GRADE LINE:
GRADING AND SURFACING OR RESURFACING AND WIDENING:

THE GRADE LINES SHOWN DENOTE THE FINISHED ELEVATION OF THE PROPOSED SURFACING AT GRADE POINTS SHOWN ON THE TYPICAL SECTIONS. WHERE NO GRADE LINES ARE SHOWN, THE PROFILES SHOWN DENOTE THE TOP ELEVATION OF THE EXISTING PAVEMENT ALONG THE CENTER LINE OF SURVEY ON WHICH THE PROPOSED RESURFACING WILL BE PLACED. GRADE LINES MAY BE ADJUSTED BY THE ENGINEER IN ORDER TO SECURE A PROPER TIE-IN.

CLEARING:

CLEARING ON THIS PROJECT SHALL BE PERFORMED TO THE LIMITS ESTABLISHED BY METHOD II.

SUPERELEVATION:

ALL CURVES ON THIS PROJECT SHALL BE SUPERELEVATED IN ACCORDANCE WITH STD. NO. 225.04 USING THE RATE OF SUPERELEVATION AND RUNOFF SHOWN ON THE PLANS. SUPERELEVATION IS TO BE REVOLVED ABOUT THE GRADE POINTS SHOWN ON THE TYPICAL SECTIONS.

SHOULDER CONSTRUCTION:

ASPHALT, EARTH, AND CONCRETE SHOULDER CONSTRUCTION ON THE HIGH SIDE OF SUPERELEVATED CURVES SHALL BE IN ACCORDANCE WITH STD. NO. 560.01.

UNDERDRAINS:

UNDERDRAINS SHALL BE CONSTRUCTED IN ACCORDANCE WITH STD. NO. 815.03 AT LOCATIONS DIRECTED BY THE ENGINEER.

GUARDRAIL:

THE GUARDRAIL LOCATIONS SHOWN ON THE PLANS MAY BE ADJUSTED DURING CONSTRUCTION AS DIRECTED BY THE ENGINEER. THE CONTRACTOR SHOULD CONSULT WITH THE ENGINEER PRIOR TO ORDERING GUARDRAIL MATERIAL.

TEMPORARY SHORING:

SHORING REQUIRED FOR THE MAINTENANCE OF TRAFFIC WILL BE PAID FOR AS "EXTRA WORK" IN ACCORDANCE WITH SECTION 104-7.

SUBSURFACE PLANS:

NO SUBSURFACE PLANS ARE AVAILABLE ON THIS PROJECT. THE CONTRACTOR SHOULD MAKE HIS OWN INVESTIGATION AS TO THE SUBSURFACE CONDITIONS.

END BENTS:

THE ENGINEER SHALL CHECK THE STRUCTURE END BENT PLANS, DETAILS, AND CROSS-SECTION PRIOR TO SETTING OF THE SLOPE STAKES FOR THE EMBANKMENT OR EXCAVATION APPROACHING A BRIDGE.

UTILITIES:

UTILITY OWNERS ON THIS PROJECT ARE: POWER - DUKE ENERGY
CELLULAR - VERIZON BUSINESS
TELEPHONE - SALUDA MOUNTAIN TELEPHONE COMPANY

RIGHT-OF-WAY MARKERS:

ALL RIGHT-OF-WAY MARKERS ON THIS PROJECT SHALL BE PLACED BY OTHERS.

2012 ROADWAY ENGLISH STANDARD DRAWINGS

The following Roadway Standards as appear in "Roadway Standard Drawings" Highway Design Branch - N. C. Department of Transportation - Raleigh, N. C., Dated Janurary 17, 2012 are applicable to this project and by reference hereby are considered a part of these plans:

STD.NO.	TITLE
DIVISION 2 - EARTHWORK	
200.02	Method of Clearing - Method II
225.02	Guide for Grading Subgrade - Secondary and Local
225.04	Method of Obtaining Superelevation - Two Lane Pavement
DIVISION 3 - PIPE CULVERTS	
300.01	Method of Pipe Installation - Method 'A'
DIVISION 4 - MAJOR STRUCTURES	
422.11	Bridge Approach Fills
DIVISION 5 - SUBGRADE, BASES AND SHOULDERS	
560.01	Method of Shoulder Construction - High Side of Superelevated Curve - Method I
DIVISION 8 - INCIDENTALS	
815.03	Pipe Underdrain and Blind Drain
840.25	Anchorage For Frames
840.29	Frames and Narrow Slot Flat Grates
840.35	Traffic Bearing Grated Drop Inlet - for Cast Iron Double Frame and Grates
840.46	Traffic Bearing Precast Drainage Structure
840.66	Drainage Structure Steps
846.01	Concrete Curb, Gutter and Curb & Gutter
846.04	Drop Inlet Installation in Shoulder Berm Gutter
862.01	Guardrail Placement
862.02	Guardrail Installation
862.03	Structure Anchor Units
876.02	Guide for Rip Rap at Pipe Outlets

$$$$$$SYSTIME$$$$$
$$$$$$$$$$$DGN$$$$$$$$$$$$$$$$$$$$
$$$$USERNAME$$$$

3/15/06

PROJECT REFERENCE NO.	SHEET NO.
BD-5114M	1-B

Note: Not to Scale

S.U.E. = Subsurface Utility Engineering

STATE OF NORTH CAROLINA
DIVISION OF HIGHWAYS

CONVENTIONAL PLAN SHEET SYMBOLS

BOUNDARIES AND PROPERTY:

- State Line
- County Line
- Township Line
- City Line
- Reservation Line
- Property Line
- Existing Iron Pin — EIP
- Property Corner
- Property Monument — ECM
- Parcel/Sequence Number — 123
- Existing Fence Line
- Proposed Woven Wire Fence
- Proposed Chain Link Fence — CL
- Proposed Barbed Wire Fence
- Existing Wetland Boundary — WLB
- Proposed Wetland Boundary — WLB
- Existing Endangered Animal Boundary — EAB
- Existing Endangered Plant Boundary — EPB

BUILDINGS AND OTHER CULTURE:

- Gas Pump Vent or U/G Tank Cap
- Sign — S
- Well — W
- Small Mine
- Foundation
- Area Outline
- Cemetery
- Building
- School
- Church
- Dam

HYDROLOGY:

- Stream or Body of Water
- Hydro, Pool or Reservoir
- Jurisdictional Stream — JS
- Buffer Zone 1 — BZ 1
- Buffer Zone 2 — BZ 2
- Flow Arrow
- Disappearing Stream
- Spring
- Swamp Marsh
- Proposed Lateral, Tail, Head Ditch — FLOW
- False Sump

RAILROADS:

- Standard Gauge — CSX TRANSPORTATION
- RR Signal Milepost — MILEPOST 35
- Switch — SWITCH
- RR Abandoned
- RR Dismantled

RIGHT OF WAY:

- Baseline Control Point
- Existing Right of Way Marker
- Existing Right of Way Line
- Proposed Right of Way Line — RW
- Proposed Right of Way Line with Iron Pin and Cap Marker — RW
- Proposed Right of Way Line with Concrete or Granite Marker — RW
- Existing Control of Access — CA
- Proposed Control of Access — CA
- Existing Easement Line — E
- Proposed Temporary Construction Easement — E
- Proposed Temporary Drainage Easement — TDE
- Proposed Permanent Drainage Easement — PDE
- Proposed Permanent Utility Easement — PUE

ROADS AND RELATED FEATURES:

- Existing Edge of Pavement
- Existing Curb
- Proposed Slope Stakes Cut — C
- Proposed Slope Stakes Fill — F
- Proposed Wheel Chair Ramp — WCR
- Proposed Wheel Chair Ramp Curb Cut — WCC
- Curb Cut for Future Wheel Chair Ramp — CCFR
- Existing Metal Guardrail
- Proposed Guardrail
- Existing Cable Guiderail
- Proposed Cable Guiderail
- Equality Symbol
- Pavement Removal

VEGETATION:

- Single Tree
- Single Shrub
- Hedge
- Woods Line
- Orchard
- Vineyard — Vineyard

EXISTING STRUCTURES:

MAJOR:

- Bridge, Tunnel or Box Culvert — CONC
- Bridge Wing Wall, Head Wall and End Wall — CONC WW

MINOR:

- Head and End Wall — CONC HW
- Pipe Culvert
- Footbridge
- Drainage Box: Catch Basin, DI or JB — CB
- Paved Ditch Gutter
- Storm Sewer Manhole — S
- Storm Sewer — S

UTILITIES:

POWER:

- Existing Power Pole
- Proposed Power Pole
- Existing Joint Use Pole
- Proposed Joint Use Pole
- Power Manhole — P
- Power Line Tower
- Power Transformer
- U/G Power Cable Hand Hole — HH
- H-Frame Pole
- Recorded U/G Power Line — P
- Designated U/G Power Line (S.U.E.*) — P

TELEPHONE:

- Existing Telephone Pole
- Proposed Telephone Pole
- Telephone Manhole — T
- Telephone Booth
- Telephone Pedestal — T
- Telephone Cell Tower
- U/G Telephone Cable Hand Hole — HH
- Recorded U/G Telephone Cable — T
- Designated U/G Telephone Cable (S.U.E.*) — T
- Recorded U/G Telephone Conduit — TC
- Designated U/G Telephone Conduit (S.U.E.*) — TC
- Recorded U/G Fiber Optics Cable — T FO
- Designated U/G Fiber Optics Cable (S.U.E.*) — T FO

WATER:

- Water Manhole — W
- Water Meter
- Water Valve
- Water Hydrant
- Recorded U/G Water Line — W
- Designated U/G Water Line (S.U.E.*) — W
- Above Ground Water Line — A/G Water

TV:

- TV Satellite Dish
- TV Pedestal — C
- TV Tower
- U/G TV Cable Hand Hole — HH
- Recorded U/G TV Cable — TV
- Designated U/G TV Cable (S.U.E.*) — TV
- Recorded U/G Fiber Optic Cable — TV FO
- Designated U/G Fiber Optic Cable (S.U.E.*) — TV FO

GAS:

- Gas Valve
- Gas Meter
- Recorded U/G Gas Line — G
- Designated U/G Gas Line (S.U.E.*) — G
- Above Ground Gas Line — A/G Gas

SANITARY SEWER:

- Sanitary Sewer Manhole
- Sanitary Sewer Cleanout
- U/G Sanitary Sewer Line — SS
- Above Ground Sanitary Sewer — A/G Sanitary Sewer
- Recorded SS Forced Main Line — FSS
- Designated SS Forced Main Line (S.U.E.*) — FSS

MISCELLANEOUS:

- Utility Pole
- Utility Pole with Base
- Utility Located Object
- Utility Traffic Signal Box — S
- Utility Unknown U/G Line — ?UTL
- U/G Tank; Water, Gas, Oil
- A/G Tank; Water, Gas, Oil
- U/G Test Hole (S.U.E.*)
- Abandoned According to Utility Records — AATUR
- End of Information — E.O.I.

SURVEY CONTROL SHEET BD-5114M

BL

POINT	DESC.	NORTH	EAST	ELEVATION	L STATION	OFFSET
1	BL-1	551092.6670	1004354.0980	1530.47	10+15.56	17.83 RT
2	BL-2	551200.3340	1004677.0020	1528.69	13+53.04	1.41 LT
3	BL-3	551376.7660	1004877.2870	1528.36	16+22.17	7.27 LT

BM1 ELEVATION = 1529.75
N 551162 E 1004669
L STATION 13+33.00 31 RIGHT
RR SPIKE IN BASE 20" BEECH

FINAL PROPOSED RIGHT OF WAY MONUMENT PSD

ALIGN	STATION	OFFSET	NORTH	EAST
L	11+00.00	-10.50	551138.1567	1004431.8380
L	11+00.00	-20.00	551147.2932	1004429.2354
L	11+00.00	10.50	551117.9601	1004437.5912
L	11+00.00	20.00	551108.8236	1004440.1938
L	11+75.00	-30.00	551177.4577	1004498.6264
L	12+50.00	40.00	551130.6828	1004589.9342
L	14+00.00	40.00	551186.2426	1004740.3500
L	14+10.00	-30.00	551250.6510	1004711.1341
L	16+00.00	-10.54	551366.4530	1004856.6712
L	16+00.00	-20.00	551374.0258	1004850.9996
L	16+00.00	10.46	551349.6443	1004869.2600
L	16+00.00	30.00	551334.0055	1004880.9725

FINAL -L-

TYPE	STATION	NORTH	EAST
PC	10+00.00	551109.1490	1004336.7775
PT	10+79.60	551122.4691	1004415.0934
PC	13+21.58	551188.7622	1004647.8160
PT	14+98.81	551285.5558	1004792.8714
PC	15+23.04	551304.5304	1004807.9486
PT	16+69.47	551392.8830	1004922.9006

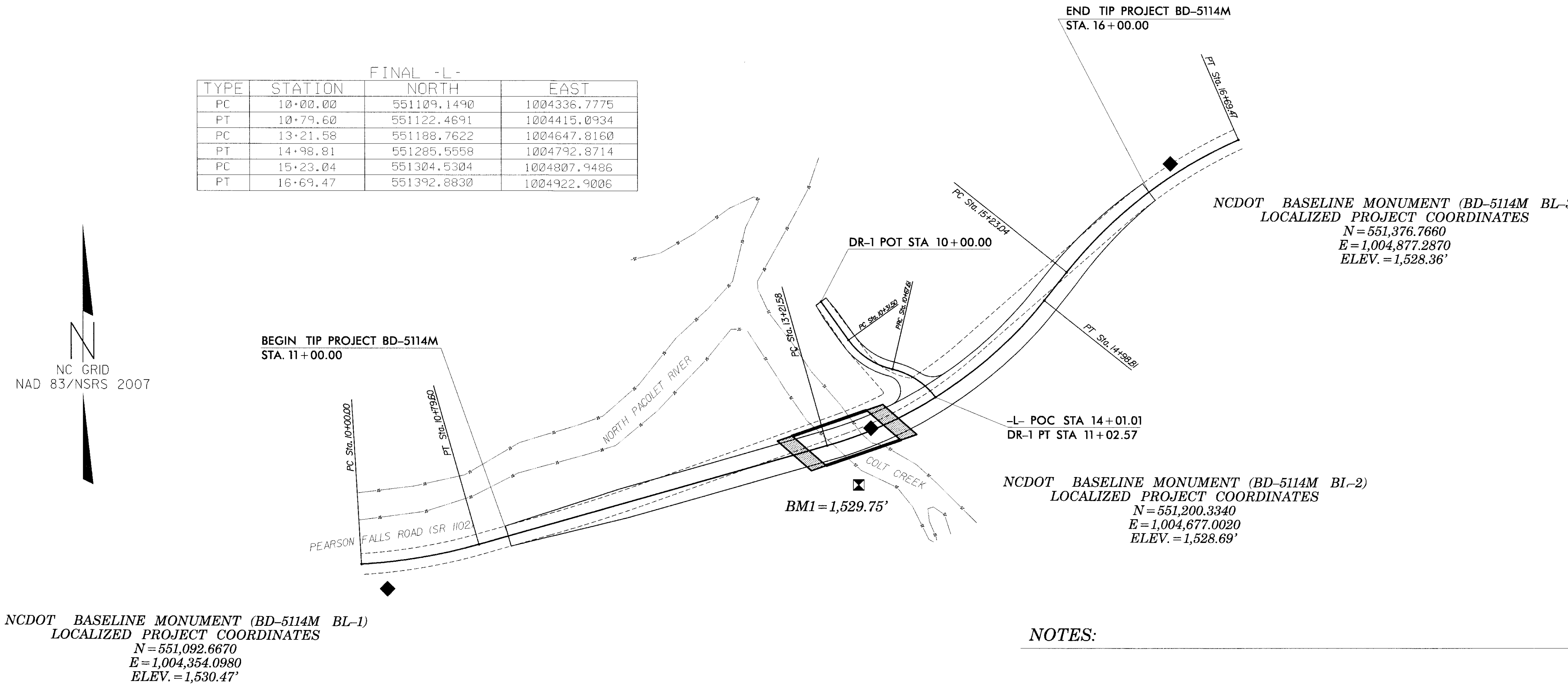

DATUM DESCRIPTION

THE LOCALIZED COORDINATE SYSTEM DEVELOPED FOR THIS PROJECT IS BASED ON THE STATE PLANE COORDINATES ESTABLISHED BY OTHERS2623.63' FOR MONUMENT "B-4792 GPS-101" WITH NAD 83/NSRS 2007 STATE PLANE GRID COORDINATES OF NORTHING: 551711.6330(ft) EASTING: 1006890.2900(ft) ELEVATION: 1486.526(ft)
THE AVERAGE COMBINED GRID FACTOR USED ON THIS PROJECT (GROUND TO GRID) IS: 0.999880177
THE N.C. LAMBERT GRID BEARING AND LOCALIZED HORIZONTAL GROUND DISTANCE FROM "B-4792 GPS-101" TO -L- STATION 10+00.00 IS S 76°43'27" W 2623.63'
ALL LINEAR DIMENSIONS ARE LOCALIZED HORIZONTAL DISTANCES
VERTICAL DATUM USED IS NAVD 88

NOTES:

1. THE CONTROL DATA FOR THIS PROJECT CAN BE FOUND ELECTRONICALLY BY SELECTING PROJECT CONTROL DATA AT:
HTTP://WWW.NCDOT.ORG/DOH/PRECONSTRUCT/HIGHWAY/LOCATION/PROJECT/

THE FILES TO BE FOUND ARE AS FOLLOWS:
BD-5114M_LS_CONTROL_120502.TXT

SITE CALIBRATION INFORMATION HAS NOT BEEN PROVIDED FOR THIS PROJECT. IF FURTHER INFORMATION IS NEEDED, PLEASE CONTACT THE LOCATION AND SURVEYS UNIT.

■ INDICATES GEODETIC CONTROL MONUMENTS USED OR SET FOR HORIZONTAL PROJECT CONTROL BY THE NCDOT LOCATION AND SURVEYS UNIT.
PROJECT CONTROL ESTABLISHED USING GLOBAL POSITIONING SYSTEM.
NETWORK ESTABLISHED FROM NGS ONLINE POSITIONING SERVICE (OPUS)

NOTE: DRAWING NOT TO SCALE

6/2/99
$$$$SYSTIME$$$$ $$$$DGN$$$$ $$$$USERNAME$$$$

PROJECT REFERENCE NO.	SHEET NO.
BD-5114M	2
R/W SHEET NO.	
ROADWAY DESIGN ENGINEER	PAVEMENT DESIGN ENGINEER

NORTH CAROLINA PROFESSIONAL SEAL 030453 ENGINEER JARON C. CARNER 7-2-17

NORTH CAROLINA PROFESSIONAL SEAL 20134 ENGINEER ROBERT M. CHOB 7/2/17

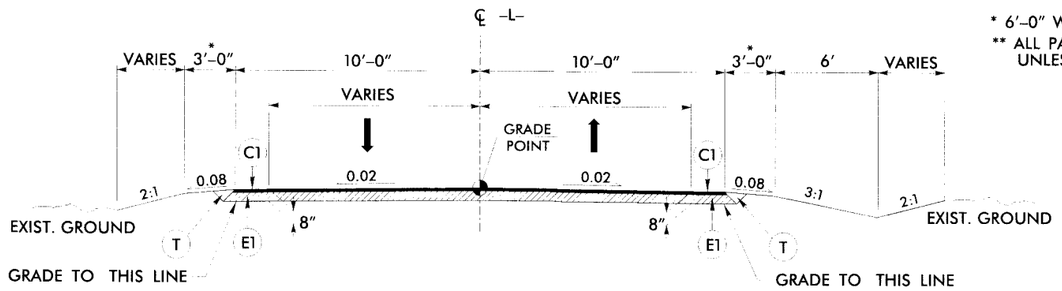

* 6'-0" WITH GUARDRAIL
** ALL PAVEMENT SLOPES ARE 1:1 UNLESS SHOWN OTHERWISE.

TYPICAL SECTION NO. 1

-L- STA. 11+00.00 TO 13+09 (BEGIN BRIDGE)
-L- STA. 13+61.66 (END BRIDGE) TO 16+00.00

TYPICAL SECTION NO. 1

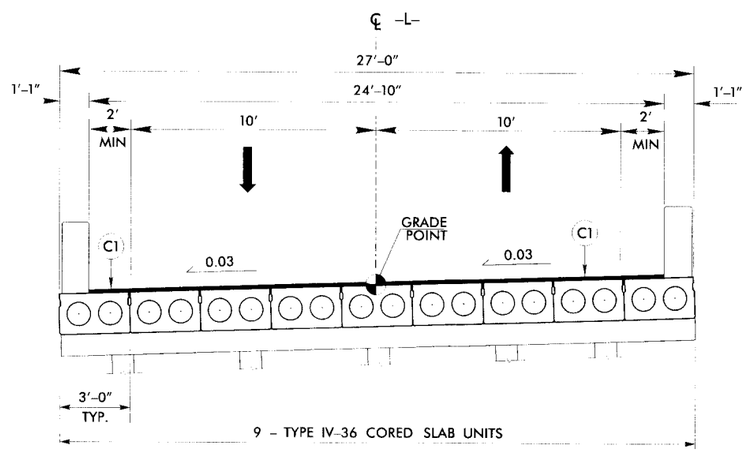

USE TYPICAL SECTION NO. 2

-L- STA. 13+09.00 (BEGIN BRIDGE) TO
-L- STA. 13+61.66 (END BRIDGE)

TYPICAL SECTION NO. 2

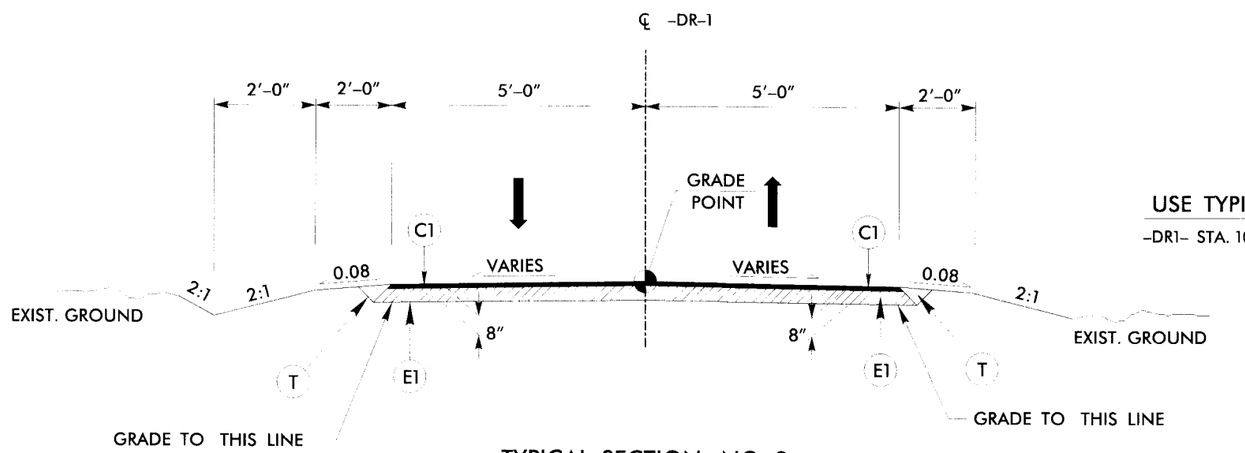

USE TYPICAL SECTION NO. 3

-DR1- STA. 10+00.00 TO STA. 10+92.36

TYPICAL SECTION NO. 3

	PAVEMENT SCHEDULE
C1	PROP. APPROX. 3" ASPHALT CONCRETE SURFACE COURSE, TYPE S9.5B, AT AN AVERAGE RATE OF 168 LBS. PER SQ. YD. IN EACH OF TWO LAYERS.
E1	PROP. APPROX. 5" ASPHALT CONCRETE BASE COURSE, TYPE B25.0B, AT AN AVERAGE RATE OF 570 LBS. PER SQ. YD.
T	EARTH MATERIAL
U	EXISTING PAVEMENT

PROJECT REFERENCE NO.	SHEET NO.
BD-5114M	3

5/28/99

STATE OF NORTH CAROLINA
DIVISION OF HIGHWAYS

SUMMARY OF QUANTITIES

Line Item	Sec No.	Quantity	Unit	Description
0000100000-N	800	1	LS	Mobilization
0000400000-N	801	1	LS	Construction Surveying
0030000000-N	SP	1	LS	Reinforced Bridge Approach Fill - Sub Regional Tier
0043000000-N	226	1	LS	Grading
0057000000-E	226	50	CY	Undercut Excavation
0134000000-E	240	30	CY	Drainage Ditch Excavation
0195000000-E	265	50	CY	Select Granular Material
0196000000-E	270	50	SY	Geotexile for Soil Stabilization
0199000000-E	SP	435	SF	Temporary Shoring
0318000000-E	300	15	Tons	Foundation Conditioning Material, Minor Strs
0335300000-E	305	96	LF	18" Drainage Pipe
1099700000-E	505	50	Tons	Class IV Subgrade Stabilization
1121000000-E	520	40	Tons	Aggregate Base Course
1220000000-E	545	40	Tons	Incidental Stone Base
1489000000-E	610	300	Tons	Asphalt Conc Base Course Type B25.0B
1519000000-E	610	210	Tons	Asphalt Conc Surface Course Type S9.5B
1575000000-E	620	30	Tons	Asphalt Binder for Plant Mix
2286000000-N	840	1	EA	Masonry Drainage Structures
2407000000-N	840	1	EA	Steel Frame with Two Grates, STD 840.37
2556000000-E	846	15	LF	Shoulder Berm Gutter
3150000000-N	862	5	EA	Additional Guardrail Posts
3180000000-N	862	1	EA	Guardrail Anchor Units, TYPE III (SHOP CURVED)
3270000000-N	SP	3	EA	Guardrail Anchor Units, TYPE 350
3215000000-N	862	3	EA	Guardrail Anchor Units, TYPE III
3195000000-N	862	1	EA	Guardrail Anchor Units TYPE AT-1
3380000000-E	862	100	LF	Temporary Steel Beam Guardrail
3389000000-N	SP	4	EA	Guardrail Anchor Units, TL-2 Temporary
3635000000-E	876	32	Tons	Rip Rap, Class II
3649000000-E	876	5	Tons	Rip Rap, Class B
3656000000-E	876	50	SY	Geotextile for Drainage
4400000000-E	1110	168	SF	Stationary Work Zone Signs
4410000000-E	1110	40	SF	Barricade Mounted Work Zone Signs
4430000000-N	1130	60	EA	Drums
4445000000-E	1140	32	LF	Barricades (Type III)
4450000000-E	1150	16	HR	Flagger (By Hour)
6000000000-E	1605	305	LF	TEMP SILT FENCE
6006000000-E	1610	20	TON	STONE FOR EROS CNTRL, A
6009000000-E	1610	30	TON	STONE FOR EROS CNTRL, B
6012000000-E	1610	30	TON	SEDIMENT CONTROL STONE
6015000000-E	1615	1.00	ACRES	TEMPORARY MULCHING
6018000000-E	1620	50	LBS	SEED FOR TEMP SEEDING
6021000000-E	1620	0.25	TON	FERTILIZER FOR TEMP SEED
6029000000-E	SP	100	LF	SAFETY FENCE
6030000000-E	1630	60	CY	SILT EXCAVATION
6036000000-E	1631	5,000	SY	MATTING FOR EROSION CONTROL
6042000000-E	1632	60	LF	1/4" HARDWARE CLOTH
6071010000-E	SP	120	LF	WATTLE
6084000000-E	1660	0.50	Acre	SEEDING & MULCHING
6090000000-E	1661	50	lb	SEED FOR REPAIR SEEDING
6093000000-E	1661	0.25	Ton	FERTILIZER FOR REPAIR SEEDING
6096000000-E	1662	50	lb	SEED FOR SUPPLEMENTAL SEEDING
6108000000-E	1665	0.75	Ton	FERTILIZER TOPDRESSING
6123000000-E	1670	0.1	EA	REFORESTATION
7980000000-N	SP	1	EA	Portable Traffic Signal System (2 Head)
				STRUCTURAL ITEMS
8035000000-N	402	1	LS	REMOVAL OF EXISTING STRUCTURE
8096000000-E	410	55	LF	PILE EXAVATION IN SOIL
8121000000-N	412	1	LS	UNCLASSIFIED STRUCTURE EXCAVATION
8182000000-E	420	27.60	CY	CLASS A CONCRETE (BRIDGE)
8210000000-N	422	1	LS	BRIDGE APPROACH SLABS
8217000000-E	425	4,150	LBS	REINFORCING STEEL (BRIDGE)
8365000000-E	450	370	LF	HP12X53 STEEL PILES
8505000000-E	460	100.29	LF	VERTICAL CONC BARR RAIL
8608000000-E	876	165.00	TONS	RIP RAP CLASS II (2'-0" THICK)
8622000000-E	876	186.00	SY	GEOTEXTILE FOR DRAINAGE
8657000000-N	430	1	LS	ELASTOMERIC BEARINGS
8762000000-E	430	450.00	LF	3'-0" X 1'-9" PRESTRESSED CONCRETE CORED SLABS

COMPUTED BY: ACC DATE: 10-28-11
CHECKED BY: ACC DATE: 10-28-11

STATE OF NORTH CAROLINA
DIVISION OF HIGHWAYS

PROJECT REFERENCE NO.	SHEET NO.
BD-5114M	3-A

RIGHT OF WAY AREA DATA

PARCEL NO.	PROPERTY OWNERS NAMES	TOTAL ACREAGE	AREA TAKEN (sf)	AREA REMAINING RT. (Acre)	AREA REMAINING LT. (Acre)	TEMP. CONST. EASE. (sf)	PERM. DRAIN. EASE. (sf)	TEMP. DRAIN. EASE. (sf)
1	TRYON GARDEN CLUB	188.000	17,073	187.608	–	1395	–	–
2	PACOLET AREA CONSERVANCY	56.800	–	–	56.800	–	–	–
3	SALUDA GRADE, LLC	0.650	2925	–	0.583	1839	–	–
4	RAE M. HUNTER	0.700	674	–	0.685	–	–	–

Approximate quantities only. Unclassified excavation, borrow excavation, fine grading, and clearing and grubbing will be paid for at the contract lump sum price for "grading".

NOTE: Invert Elevations are for Bid Purposes only and shall not be used for project construction stakeout. See "Standard Specifications For Roads and Structures, Section 300-5".

SUB-REGIONAL & REGIONAL LIST OF PIPES, ENDWALLS, ETC. (FOR PIPES 48" & UNDER)

STATION	LOCATION (LT, RT, OR CL)	STRUCTURE NO. FROM	STRUCTURE NO. TO	TOP ELEVATION	INVERT ELEVATION	INVERT ELEVATION	SLOPE CRITICAL	DRAINAGE PIPE (RCP, CSP, CAAP, HDPE, or PVC) 12"	15"	18"	24"	30"	36"	42"	48"	DO NOT USE RCP	DO NOT USE CSP	DO NOT USE CAAP	DO NOT USE HDPE	C.S. PIPE 12" .064	15" .064	18" .064	24" .064	36" .079	42" .109	48" .109
-L- 11+68	CL	4-1								32																
-L- 13+71	LT	4-2	OUT							24																
-L- 14+11	LT	4-3	4-2							40																
TOTAL										96																

STATION	R.C. PIPE (CLASS III) 15"	18"	24"	30"	36"	42"	48"	R.C. PIPE (CLASS IV) 12"	15"	18"	24"	30"	36"	42"	48"	**" R. C. PIPE (CLASS V)	**" R. C. PIPE CULVERTS, CONTRACTOR DESIGN PIPE	**" R. C. PIPE CULVERTS, CONTRACTOR DESIGN PIPE	15" SIDE DRAIN PIPE	18" SIDE DRAIN PIPE
-L- 11+68																				
-L- 13+71																				
-L- 14+11																				
TOTAL																				

STATION	ENDWALLS STD. 838.01, STD. 838.11 OR STD. 838.80 (UNLESS NOTED OTHERWISE) CU. YDS. R.C.P.	C.S.P.	QUANTITIES FOR DRAINAGE STRUCTURES * TOTAL L.F. FOR PAY QUANTITY SHALL BE COL. 'A' + (1.3 X COL.'B') PER EACH (0' THRU 5.0')	LIN. *FT. A 5.0' THRU 10.0'	B 10.0' AND ABOVE	C.B. STD. 840.01 OR STD. 840.02	FRAME, GRATES AND HOOD STANDARD 840.03 TYPE OF GRATE E	F	G	CONCRETE TRANSITIONAL SECTION CATCH BASIN	DROP INLET	T.B.D.I. STD. 840.36	T.B.D.I. FRAME WITH TWO GRATES STD. 840.37	CORR. STEEL ELBOWS NO. & SIZE	CONC. COLLARS CL. "B" C.Y. STD 840.72	CONC. & BRICK PIPE PLUG, C.Y. STD. 840.71	PIPE REMOVAL LIN.FT.	REMARKS
-L- 11+68																		
-L- 13+71			1								1	1	1					
-L- 14+11																		
TOTAL			1								1	1	1					

ABBREVIATIONS

C.B. CATCH BASIN
N.D.I. NARROW DROP INLET
D.I. DROP INLET
G.D.I. GRATED DROP INLET
G.D.I. (N.S.) GRATED DROP INLET (NARROW SLOT)
J.B. JUNCTION BOX
M.H. MANHOLE
T.B.D.I. TRAFFIC BEARING DROP INLET
T.B.J.B. TRAFFIC BEARING JUNCTION BOX

"N" = DISTANCE FROM EDGE OF LANE TO FACE OF GUARDRAIL.
TOTAL SHOULDER WIDTH = DISTANCE FROM EDGE OF TRAVEL LANE TO SHOULDER BREAK POINT.
FLARE LENGTH = DISTANCE FROM LAST SECTION OF PARALLEL GUARDRAIL TO END OF GUARDRAIL.
W = TOTAL WIDTH OF FLARE FROM BEGINNING OF TAPER TO END OF GUARDRAIL.
G = GATING IMPACT ATTENUATOR TYPE 350
NG = NON-GATING IMPACT ATTENUATOR TYPE 350

GUARDRAIL SUMMARY

SURVEY LINE	BEG. STA.	END STA.	LOCATION	LENGTH STRAIGHT	SHOP CURVED	DOUBLE FACED	WARRANT POINT APPROACH END	TRAILING END	"N" DIST. FROM E.O.L.	TOTAL SHOUL. WIDTH	FLARE LENGTH APPROACH END	TRAILING END	W APPROACH END	TRAILING END
-L-	12+32	13+01	LT	75				13+01	2	6		50		1
-L-	12+48	13+17	RT	75			13+17		2	6	50		1	
-L-	13+55	13+76	LT	6.25	25		13+55		3	6				
-L-	13+67	14+36	RT	75				13+67	4	6		50		1
			SUBTOTAL	225	25									
			LESS DEDUCTIONS FOR ANCHORS											
			GRAU-350 3 @ 50'=	-150										
			TYPE III 4 @ 25'=	-75	-25									
			AT-1 1 @ 6.25'=	-6.25										
			PROJECT TOTALS:	0	0									
			ADDITIONAL GUARDRAIL POSTS=5 EA.											

SURVEY LINE	BEG. STA.	ANCHORS XI MOD	XI	GRAU 350	M-350	TYPE III	CAT-1	B-77	BIC	AT-1	IMPACT ATTENUATOR TYPE 350 EA	G	NG	SINGLE FACED GUARDRAIL	REMOVE EXISTING GUARDRAIL	REMOVE AND STOCKPILE EXISTING GUARDRAIL	REMARKS
-L-	12+32			1		1											
-L-	12+48			1		1											
-L-	13+55					1				1							
-L-	13+67			1		1											
SUBTOTAL				3		4				1							

COMPUTED BY: ACC	DATE: 10-28-11
CHECKED BY: ACC	DATE: 10-28-11

PROJECT REFERENCE NO.	SHEET NO.
BD-5114M	3-B

DIVISION OF HIGHWAYS
STATE OF NORTH CAROLINA

SUMMARY OF EARTHWORK

IN CUBIC YARDS

LOCATION	UNCLASSIFIED EXCAVATION	UNDERCUT	EMBT+%	BORROW	WASTE
SUMMARY NO.1					
-L- STA. 11+00 TO STA. 13+09 (BEG. BRIDGE)	461		29		432
SUBTOTAL SUMMARY NO.1	461		29		432
SUMMARY NO.2					
-DR-1- STA. 10+00.00 TO STA. 10+92.36	47		9		38
SUBTOTAL SUMMARY NO.2	47		9		38
SUMMARY NO.3					
-L- STA. 13+61.66 (END BRIDGE) TO STA. 16+00	392		34		358
SUBTOTAL SUMMARY NO.2	392		34		358
PROJECT SUBTOTAL	900		72		828
GRAND TOTAL	900		72		828
SAY	910				835
EST. DDE = 30 CY					

CONTINGENCY ITEMS:

INCIDENTAL STONE = 40 TONS

UNDERCUT EXCAVATION = 50 CY

SELECT GRANULAR MATERIAL = 50 CY

CLASS IV SUBGRADE STABILIZATION = 50 TONS

FABRIC FOR SOIL STABILIZATION = 50 SY

Approximate quantities only. Unclassified excavation, borrow excavation, fine grading, clearing and grubbing, and removal of existing pavement will be paid for at the contract lump sum price for "grading".

BL#	NORTHING	EASTING	ELEVATION	-L- STATION
BL-1	551092.6670	1004354.0980	1530.47	-L- STA. 10+15.56
BL-2	551200.3340	1004677.0020	1528.69	-L- STA. 13+53.04
BL-3	551376.7660	1004877.2870	1528.36	-L- STA. 16+22.17

DETAIL 1
STANDARD BASE DITCH
(Not to Scale)

DDE = 30 CY

FROM STA. 13+00 TO STA. 13+40 -L- RT
FROM STA. 13+67 TO STA. 13+87 -L- RT

SKETCH SHOWING RELATIONSHIP OF PAVEMENT WIDTH TO BRIDGE WIDTH (3' MINIMUM SHOULDER)

MINIMUM DISTANCE MEASURED BETWEEN PROPOSED EOP & FACE OF BRIDGE BARRIER CORNERS:

A = 3'-1.5"
B = 3'-0"
C = 3'-11"
D = 4'-3"

Vaughn & Melton
Consulting Engineers
Asheville, North Carolina
828 253 2796
Charlotte, North Carolina 704 357-0888
Tri-Cities, Tennessee 423 467 8481
Knoxville, Tennessee 865 546 1600
Middlesboro, Kentucky 606 248 6008
Spartanburg, South Carolina 864 574-4775

Copyright © 1994 Vaughn & Melton, Inc. All Rights Reserved

PROJECT REFERENCE NO.	SHEET NO.
BD-5114M	4
R/W SHEET NO.	

ROADWAY DESIGN ENGINEER: NORTH CAROLINA PROFESSIONAL SEAL 030453 — JOHN C. CARVER — 11/13/12

HYDRAULICS ENGINEER: NORTH CAROLINA PROFESSIONAL SEAL 033023 — Bradley Scarborough, PE — 11/13/12

DETAIL 2
RIP RAP AT EMBANKMENT
(Not to Scale)

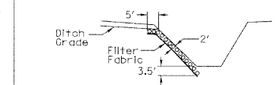

Type of Liner= 32 TONS,CL II Rip-Rap
Filter Fabric= 34 sy

-L- STA. 13+30 RT
-L- STA. 13+70 RT

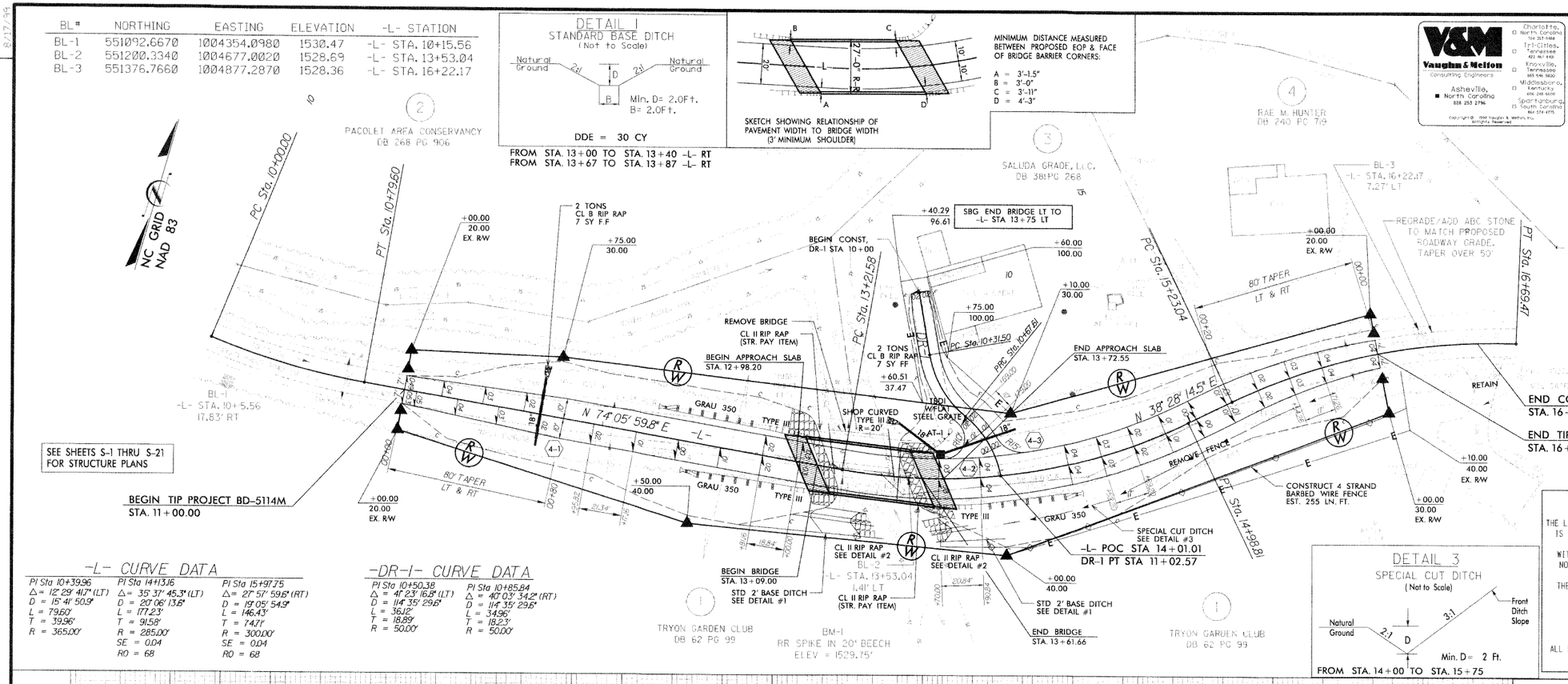

-L- CURVE DATA

PI Sta 10+39.96	PI Sta 14+13.16	PI Sta 15+97.75
Δ= 12°29' 41.7" (LT)	Δ= 35°37' 45.3" (LT)	Δ= 27°57' 59.6" (RT)
D = 15°41' 50.9"	D = 20°06' 13.6"	D = 19°05' 54.9"
L = 79.60'	L = 177.23'	L = 146.43'
T = 39.96'	T = 91.58'	T = 74.71'
R = 365.00'	R = 285.00'	R = 300.00'
	SE = 0.04	SE = 0.04
	RO = 68	RO = 68

-DR-1- CURVE DATA

PI Sta 10+50.38	PI Sta 10+85.84
Δ = 41°23' 16.8" (LT)	Δ = 40°03' 34.2" (RT)
D = 114°35' 29.6"	D = 114°35' 29.6"
L = 36.12'	L = 34.96'
T = 18.89'	T = 18.23'
R = 50.00'	R = 50.00'

DETAIL 3
SPECIAL CUT DITCH
(Not to Scale)

FROM STA. 14+00 TO STA. 15+75

DATUM DESCRIPTION

THE LOCALIZED COORDINATE SYSTEM DEVELOPED FOR THIS PROJECT IS BASED ON THE STATE PLANE COORDINATES ESTABLISHED BY NCDOT FOR MONUMENT "GPS 101"
WITH NAD 83/NSRS 2007 STATE PLANE GRID COORDINATES OF
NORTHING: 551711.633(ft) EASTING: 1006890.290(ft)
ELEVATION: 1486.526(ft)
THE AVERAGE COMBINED GRID FACTOR USED ON THIS PROJECT (GROUND TO GRID) IS: 0.999880177
THE N.C. LAMBERT GRID BEARING AND LOCALIZED HORIZONTAL GROUND DISTANCE FROM "GPS 101" TO BL-1 -L- STATION 10+15.56 IS
S 76°17'05.57" W 2610.630
ALL LINEAR DIMENSIONS ARE LOCALIZED HORIZONTAL DISTANCES
VERTICAL DATUM USED IS NAVD 88

STRUCTURE HYDRAULIC DATA

DESIGN DISCHARGE	= 728 CFS
DESIGN FREQUENCY	= 25 YRS
DESIGN HW ELEVATION	= 1527.44 FT
BASE DISCHARGE	= 1040 CFS
BASE FREQUENCY	= 100 YRS
BASE HW ELEVATION	= 1528.91 FT
OVERTOPPING DISCHARGE	= 1070 CFS
OVERTOPPING FREQUENCY	= 50+ YRS
OVERTOPPING ELEVATION	= 1528.91 FT
DATE OF SURVEY	= 07/06/2011
W.S.ELEVATION AT DATE OF SURVEY	= 1522.4 FT

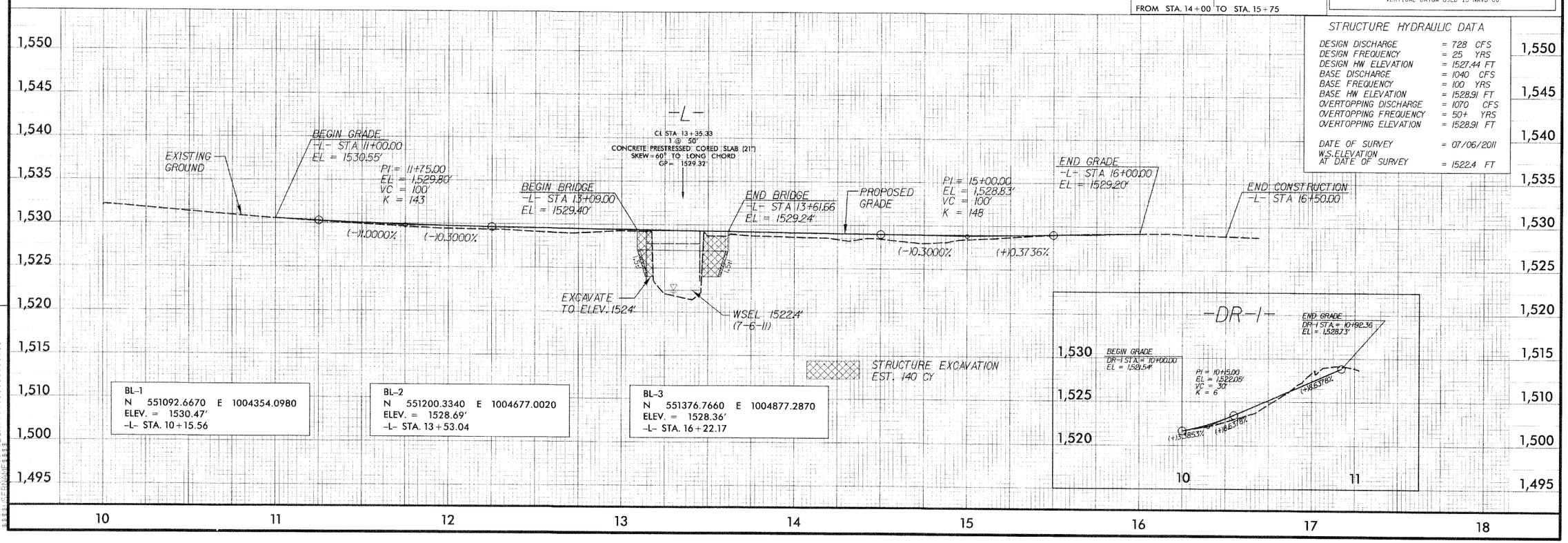

BL-1
N 551092.6670 E 1004354.0980
ELEV. = 1530.47'
-L- STA. 10+15.56

BL-2
N 551200.3340 E 1004677.0020
ELEV. = 1528.69'
-L- STA. 13+53.04

BL-3
N 551376.7660 E 1004877.2870
ELEV. = 1528.36'
-L- STA. 16+22.17

REVISIONS

1. REDUCED THE TEMPORARY CONSTRUCTION EASEMENT ON PARCEL 3. 3/29/12

8/17/99

STATE OF NORTH CAROLINA
DIVISION OF HIGHWAYS

TRANSPORTATION MANAGEMENT PLAN

POLK COUNTY

DIVISION 14

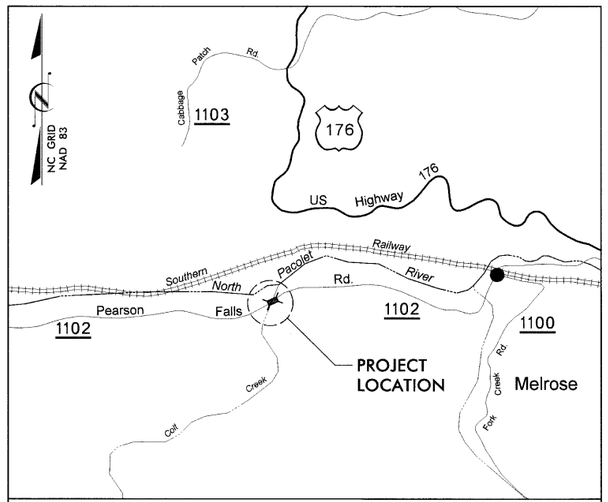

VICINITY MAP

LOCATION: BRIDGE NO. 3 OVER COLT CREEK ON SR 1102 (PEARSON FALLS RD.)

INDEX OF SHEETS

SHEET NO.	TITLE
TMP-1	TITLE SHEET, AND INDEX OF SHEETS
TMP-1A	LIST OF APPLICABLE ROADWAY STANDARD DRAWINGS, LEGEND, AND TEMPORARY PAVEMENT MARKING
TMP-1B	TRANSPORTATION OPERATIONS PLAN: (MANAGEMENT STRATEGIES, GENERAL NOTES AND LOCAL NOTES)
TMP-2	TEMPORARY TRAFFIC CONTROL PHASING
TMP-3	TEMPORARY TRAFFIC CONTROL PHASE I DETAIL
TMP-4	TEMPORARY TRAFFIC CONTROL PHASE II DETAIL
SIG-1	TEMPORARY TRAFFIC CONTROL SIGNAL PLAN

SHEET NO.
TMP-1

TIP PROJECT: BD-5114M

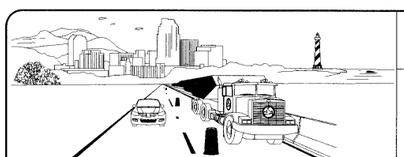

WORK ZONE SAFETY & MOBILITY
"from the MOUNTAINS to the COAST"

N.C.D.O.T. WORK ZONE TRAFFIC CONTROL
1580 MAIL SERVICE CENTER (MSC) RALEIGH, NC 27699-1580
1020 BIRCH RIDGE DRIVE, RALEIGH, NC 27610 (DELIVERY)
PHONE: (919) 250-4094 FAX: (919) 250-4098

J. S. BOURNE, P.E.	STATE TRAFFIC MANAGEMENT ENGINEER
LLOYD. D. BROWN, P.E.	TRAFFIC CONTROL PROJECT ENGINEER
AARON CARVER, P.E.	TRAFFIC CONTROL PROJECT DESIGN ENGINEER
AARON CARVER, P.E.	TRAFFIC CONTROL DESIGN ENGINEER

DIVISION OF HIGHWAYS · STATE OF NORTH CAROLINA · DEPARTMENT OF TRANSPORTATION · WORK ZONE TRAFFIC CONTROL

V&M Vaughn & Melton
Consulting Engineers
Asheville, North Carolina 828-253-2796
Charlotte, North Carolina 704-837-7815

Copyright © 2006 Vaughn & Melton, Inc.
All Rights Reserved

PROJECT ENGINEER LLOYD D. BROWN, P.E.
DESIGN ENGINEER AARON CARVER, P.E.

APPROVED: [signature]
DATE: July 20 2012

SEAL
NORTH CAROLINA PROFESSIONAL SEAL 20119 ENGINEER LLOYD D. BROWN

$$$$$SYSTIME$$$$$
$$$$$$$$$$$$$$$$DGN$$$$$$$$$$$$$$$$
$$$$USERNAME$$$$

PROJ. REFERENCE NO.	SHEET NO.
BD-5114M	TMP-1A

ROADWAY STANDARD DRAWINGS

THE FOLLOWING ROADWAY STANDARDS AS SHOWN IN "ROADWAY STANDARD DRAWINGS" - PROJECT SERVICES UNIT - N.C. DEPARTMENT OF TRANSPORTATION - RALEIGH, N.C., DATED JANUARY 2012 ARE APPLICABLE TO THIS PROJECT AND BY REFERENCE HEREBY ARE CONSIDERED A PART OF THESE PLANS:

STD. NO.	TITLE
1101.01	WORK ZONE ADVANCE WARNING SIGNS
1101.02	TEMPORARY LANE CLOSURES
1101.03	TEMPORARY ROAD CLOSURES
1101.04	TEMPORARY SHOULDER CLOSURES
1101.05	WORK ZONE VEHICLE ACCESSES
1101.11	TRAFFIC CONTROL DESIGN TABLES
1110.01	STATIONARY WORK ZONE SIGNS
1110.02	PORTABLE WORK ZONE SIGNS
1115.01	FLASHING ARROW PANELS
1130.01	DRUMS
1135.01	CONES
1145.01	BARRICADES
1150.01	FLAGGING DEVICES
1160.01	TEMPORARY CRASH CUSHION
1165.01	TRUCK MOUNTED IMPACT ATTENUATOR
1170.01	PORTABLE CONCRETE BARRIER
1180.01	SKINNY-DRUM
1205.01	PAVEMENT MARKINGS - LINE TYPES & OFFSETS
1205.04	PAVEMENT MARKINGS - INTERSECTIONS
1205.08	PAVEMENT MARKINGS - SYMBOLS & WORD MESSAGES
1205.12	PAVEMENT MARKINGS - BRIDGES
1261.01	GUARDRAIL & BARRIER DELINEATOR SPACING
1261.02	GUARDRAIL & BARRIER DELINEATOR TYPES
1262.01	GUARDRAIL END DELINEATION

LEGEND

GENERAL

- DIRECTION OF TRAFFIC FLOW
- DIRECTION OF PEDESTRIAN TRAFFIC FLOW
- EXIST. PVMT.
- NORTH ARROW
- PROPOSED PVMT.
- WORK AREA
- TEMPORARY PAVEMENT

TEMPORARY PAVEMENT MARKING

SYMBOL	DESCRIPTION
	PAINT
PA	WHITE EDGE LINE (4")
PI	YELLOW DOUBLE CENTER (4")
P4	STOP BAR (24"WHITE)

TRAFFIC CONTROL DEVICES

- BARRICADE (TYPE III)
- CONE
- DRUM — SKINNY DRUM — TUBULAR MARKER
- TEMPORARY CRASH CUSHION
- FLASHING ARROW PANEL (TYPE C)
- FLAGGER
- LAW ENFORCEMENT
- TRUCK MOUNTED IMPACT ATTENUATOR (TMIA)
- CHANGEABLE MESSAGE SIGN

TEMPORARY SIGNING

- PORTABLE SIGN
- STATIONARY SIGN
- STATIONARY OR PORTABLE SIGN

SIGNALS

- EXISTING
- PROPOSED
- TEMPORARY (TEMP)
- PORTABLE TRAFFIC SIGNAL

PAVEMENT MARKINGS

- EXISTING LINES
- TEMPORARY LINES

PAVEMENT MARKING SYMBOLS

- PAVEMENT MARKING SYMBOLS

APPROVED: DATE: 7/2/2012

SEAL

NORTH CAROLINA PROFESSIONAL SEAL 20119 ENGINEER LLOYD D. BROWN

DIVISION OF HIGHWAYS · STATE OF NORTH CAROLINA · DEPARTMENT OF TRANSPORTATION · WORK ZONE TRAFFIC CONTROL

ROADWAY STANDARD DRAWINGS & LEGEND

$$$$$SYSTIME$$$$
$$$$$$$$$$$$$$$$DGN$$$$$$$$$$$$$$$$
$$$USERNAME$$$

GENERAL NOTES / LOCAL NOTES

CHANGES MAY BE REQUIRED WHEN PHYSICAL DIMENSIONS IN THE DETAIL DRAWINGS, STANDARD DETAILS, AND ROADWAY DETAILS ARE NOT ATTAINABLE TO MEET FIELD CONDITIONS OR RESULT IN DUPLICATE OR UNDESIRED OVERLAPPING OF DEVICES. MODIFICATION MAY INCLUDE: MOVING, SUPPLEMENTING, COVERING, OR REMOVAL OF DEVICES AS DIRECTED BY THE ENGINEER.

THE FOLLOWING GENERAL NOTES APPLY AT ALL TIMES FOR THE DURATION OF THE CONSTRUCTION PROJECT EXCEPT WHEN OTHERWISE NOTED IN THE PLAN OR DIRECTED BY THE ENGINEER.

LANE AND SHOULDER CLOSURE REQUIREMENTS

A) REMOVE LANE CLOSURE DEVICES FROM THE LANE WHEN WORK IS NOT BEING PERFORMED BEHIND THE LANE CLOSURE OR WHEN A LANE CLOSURE IS NO LONGER NEEDED OR AS DIRECTED BY THE ENGINEER.

B) WHEN PERSONNEL AND/OR EQUIPMENT ARE WORKING WITHIN 15 FT OF AN OPEN TRAVEL LANE, CLOSE THE NEAREST OPEN SHOULDER USING ROADWAY STANDARD DRAWING NO. 1101.04 UNLESS THE WORK AREA IS PROTECTED BY BARRIER OR GUARDRAIL OR A LANE CLOSURE IS INSTALLED.

C) WHEN PERSONNEL AND/OR EQUIPMENT ARE WORKING ON THE SHOULDER ADJACENT TO AN UNDIVIDED FACILITY AND WITHIN 5 FT OF AN OPEN TRAVEL LANE, CLOSE THE NEAREST OPEN TRAVEL LANE USING ROADWAY STANDARD DRAWING NO. 1101.02 UNLESS THE WORK AREA IS PROTECTED BY BARRIER OR GUARDRAIL.

WHEN PERSONNEL AND/OR EQUIPMENT ARE WORKING ON THE SHOULDER ADJACENT TO A DIVIDED FACILITY AND WITHIN 10 FT OF AN OPEN TRAVEL LANE, CLOSE THE NEAREST OPEN TRAVEL LANE USING ROADWAY STANDARD DRAWING NO. 1101.02 UNLESS THE WORK AREA IS PROTECTED BY BARRIER OR GUARDRAIL.

D) WHEN PERSONNEL AND/OR EQUIPMENT ARE WORKING WITHIN A LANE OF TRAVEL OF AN UNDIVIDED OR DIVIDED FACILITY, CLOSE THE LANE ACCORDING TO THE TRAFFIC CONTROL PLANS, ROADWAY STANDARD DRAWINGS, OR AS DIRECTED BY THE ENGINEER. CONDUCT THE WORK SO THAT ALL PERSONNEL AND/OR EQUIPMENT REMAIN WITHIN THE CLOSED TRAVEL LANE.

E) DO NOT WORK SIMULTANEOUSLY WITHIN 15 FT ON BOTH SIDES OF AN OPEN TRAVELWAY, RAMP, OR LOOP WITHIN THE SAME LOCATION UNLESS PROTECTED WITH GUARDRAIL OR BARRIER.

PAVEMENT EDGE DROP OFF REQUIREMENTS

F) BACKFILL AT A 6:1 SLOPE UP TO THE EDGE AND ELEVATION OF EXISTING PAVEMENT IN AREAS ADJACENT TO AN OPENED TRAVEL LANE THAT HAS AN EDGE OF PAVEMENT DROP-OFF AS FOLLOWS:

BACKFILL DROP-OFFS THAT EXCEED 2 INCHES ON ROADWAYS WITH POSTED SPEED LIMITS OF 45 MPH OR GREATER.

BACKFILL DROP-OFFS THAT EXCEED 3 INCHES ON ROADWAYS WITH POSTED SPEED LIMITS LESS THAN 45 MPH.

BACKFILL WITH SUITABLE COMPACTED MATERIAL, AS APPROVED BY THE ENGINEER, AT NO EXPENSE TO THE DEPARTMENT.

G) DO NOT EXCEED A DIFFERENCE OF 2 INCHES IN ELEVATION BETWEEN OPEN LANES OF TRAFFIC FOR NOMINAL LIFTS OF 1.5 INCHES. INSTALL ADVANCE WARNING "UNEVEN LANES" SIGNS (W8-11) IN ADVANCE AND A MINIMUM OF EVERY HALF MILE THROUGHOUT THE UNEVEN AREA.

LOCAL NOTES:

1) EMERGENCY VEHICLE ACCESS MUST BE MAINTAINED AT ALL TIMES.

TRAFFIC PATTERN ALTERATIONS

H) NOTIFY THE ENGINEER TWENTY ONE (21) CALENDAR DAYS PRIOR TO ANY TRAFFIC PATTERN ALTERATION.

SIGNING

I) INSTALL ADVANCE WORK ZONE WARNING SIGNS WHEN WORK IS WITHIN 40 FT FROM THE EDGE OF TRAVEL LANE AND NO MORE THAN THREE (3) DAYS PRIOR TO THE BEGINNING OF CONSTRUCTION.

J) ENSURE ALL NECESSARY SIGNING IS IN PLACE PRIOR TO ALTERING ANY TRAFFIC PATTERN.

K) INSTALL BLACK ON ORANGE "DIP" SIGNS (W8-2) AND/OR "BUMP" SIGNS (W8-1) 100 ft IN ADVANCE OF THE UNEVEN AREA, OR AS DIRECTED BY THE ENGINEER.

TRAFFIC BARRIER

L) INSTALL TEMPORARY BARRIER ACCORDING TO THE TRANSPORTATION MANAGEMENT PLANS A MAXIMUM OF TWO (2) WEEKS PRIOR TO BEGINNING WORK IN ANY LOCATION. ONCE TEMPORARY BARRIER IS INSTALLED AT ANY LOCATION PROCEED IN A CONTINUOUS MANNER TO COMPLETE THE PROPOSED WORK IN THAT LOCATION UNLESS OTHERWISE STATED IN THE TRANSPORTATION MANAGEMENT PLANS OR AS DIRECTED BY THE ENGINEER.

DO NOT PLACE BARRIER DIRECTLY ON ANY SURFACE OTHER THAN ASPHALT OR CONCRETE.

ONCE TEMPORARY BARRIER IS INSTALLED AT ANY LOCATION AND NO WORK IS PERFORMED BEHIND THE TEMPORARY BARRIER FOR A PERIOD LONGER THAN TWO (2) MONTHS, REMOVE / RESET TEMPORARY BARRIER AT NO COST TO THE DEPARTMENT UNLESS OTHERWISE STATED IN THE TRANSPORTATION MANAGEMENT PLANS, TEMPORARY BARRIER IS PROTECTING A HAZARD, OR AS DIRECTED BY THE ENGINEER.

INSTALL TEMPORARY BARRIER WITH THE TRAFFIC FLOW BEGINNING WITH THE UPSTREAM SIDE OF TRAFFIC. REMOVE TEMPORARY BARRIER AGAINST THE TRAFFIC FLOW BEGINNING WITH THE DOWNSTREAM SIDE OF TRAFFIC.

INSTALL AND SPACE DRUMS NO GREATER THAN TWICE THE POSTED SPEED LIMIT (MPH) TO CLOSE OR KEEP THE SECTION OF THE ROADWAY CLOSED UNTIL THE TEMPORARY BARRIER CAN BE PLACED OR AFTER THE TEMPORARY BARRIER IS REMOVED.

M) PROTECT THE APPROACH END OF MOVABLE/PORTABLE CONCRETE BARRIER AT ALL TIMES DURING THE INSTALLATION AND REMOVAL OF THE BARRIER BY EITHER A TRUCK MOUNTED ATTENUATOR (MAXIMUM 72 HOURS) OR A TEMPORARY CRASH CUSHION.

PROTECT THE APPROACH END OF MOVABLE/PORTABLE CONCRETE BARRIER FROM ONCOMING TRAFFIC AT ALL TIMES BY A TEMPORARY CRASH CUSHION UNLESS THE APPROACH END OF MOVABLE/PORTABLE CONCRETE BARRIER IS OFFSET FROM ONCOMING TRAFFIC AS FOLLOWS OR AS SHOWN IN THE PLANS: (SEE ALSO 1101.05)

POSTED SPEED LIMIT	MINIMUM OFFSET
40 OR LESS	15 FT
45 - 50	20 FT
55	25 FT
60 MPH or HIGHER	30 FT

TRAFFIC CONTROL DEVICES

N) WHEN LANE CLOSURES ARE NOT IN EFFECT SPACE CHANNELIZING DEVICES IN WORK AREAS NO GREATER IN FEET THAN TWICE THE POSTED SPEED LIMIT (MPH) EXCEPT, 10 FT ON-CENTER IN RADII, AND 3 FT OFF THE EDGE OF AN OPEN TRAVELWAY. REFER TO STANDARD SPECIFICATIONS FOR ROADS AND STRUCTURES SECTIONS 1130 (DRUMS), 1135 (CONES) AND 1180 (SKINNY DRUMS) FOR ADDITIONAL REQUIREMENTS.

O) PLACE TYPE III BARRICADES, WITH "ROAD CLOSED" SIGN R11-2 ATTACHED, OF SUFFICIENT LENGTH TO CLOSE ENTIRE ROADWAY.

PAVEMENT MARKING

P) INSTALL TEMPORARY PAVEMENT MARKINGS ON INTERIM LAYERS OF PAVEMENT AS FOLLOWS:

ROAD NAME	MARKING	MARKER
SR1102 (PEARSON FALLS ROAD)	PAINT	NONE

Q) PLACE ONE APPLICATION OF PAINT FOR TEMPORARY TRAFFIC PATTERNS. PLACE A SECOND APPLICATION OF PAINT SIX (6) MONTHS AFTER THE INITIAL APPLICATION AND EVERY SIX MONTHS AS DIRECTED BY THE ENGINEER.

R) TIE PROPOSED PAVEMENT MARKING LINES TO EXISTING PAVEMENT MARKING LINES.

S) REMOVE/REPLACE ANY CONFLICTING/DAMAGED PAVEMENT MARKINGS BY THE END OF EACH DAY'S OPERATION.

MISCELLANEOUS

T) IN THE EVENT A TIE-IN CANNOT BE MADE IN ONE DAY'S TIME, BRING THE TIE-IN AREA TO AN APPROPRIATE ROADWAY ELEVATION AS DETERMINED BY THE ENGINEER. PLACE BLACK ON ORANGE "LOOSE GRAVEL" SIGNS (W8-7) AND BLACK ON ORANGE "PAVEMENT ENDS" SIGNS (W8-3) 100 ft AND 200 ft RESPECTIVELY IN ADVANCE OF THE UNEVEN AREAS. USE DRUMS TO DELINEATE THE EDGE OF ROADWAY ALONG UNPAVED AREAS.

MANAGEMENT STRATEGIES

TRAFFIC WILL BE MAINTAINED ON THE EXISTING ROAD, BUT REDUCED TO ONE LANE USING TEMPORARY SIGNALS AND PAVEMENT MARKINGS AS NEW ALIGNMENT IS CONSTRUCTED.
PHASE 2 SHOWS TRAFFIC SHIFTED TO ONE LANE ON THE NEW ALIGNMENT USING TEMPORARY SIGNALS AND PAVEMENT MARKINGS WHILE THE REMAINDER IS CONSTRUCTED.
A FLAGGING OPERATION WILL BE USED TO CONSTRUCT THE NEW TIE-INS.

Vaughn & Melton
Consulting Engineers
Asheville, North Carolina 828-253-2796
Charlotte, North Carolina 704-837-7185
Tri-Cities, Tennessee 423-467-8401
Knoxville, Tennessee 865-546-5800
Middlesboro, Kentucky 606-248-6600
Spartanburg, South Carolina 864-574-4775
Copyright © 2006 Vaughn & Melton, Inc. All Rights Reserved

APPROVED: DATE:

SEAL
NORTH CAROLINA PROFESSIONAL ENGINEER SEAL 20119 LLOYD D. BROWN

DIVISION OF HIGHWAYS STATE OF NORTH CAROLINA DEPARTMENT OF TRANSPORTATION WORK ZONE TRAFFIC CONTROL

TRANSPORTATION OPERATIONS PLAN
(MANAGEMENT STRATEGIES & GENERAL NOTES)

PROJ. REFERENCE NO.	SHEET NO.
BD-5114M	TMP-2

PROJECT PHASING

PHASE I

STEP 1: - ERECT WORK ZONE ADVANCED WARNING SIGNS USING DETAIL DRAWINGS FOR WORK ZONE SIGNS. (SEE RDWY STD. 1101.01)

--INSTALL PORTABLE TRAFFIC SIGNALS AS REQUIRED IN THE SIGNAL PLANS.

NOTE: STEP 2 SHALL BE COMPLETED IN A CONTINUOUS OPERATION.

STEP 2: - USING RDWY STD 1101.02 SHEET 1 OF 15, PERFORM THE FOLLOWING ON SR 1102:

--REMOVE EXISTING BRIDGE RAIL(RIGHT SIDE), SAW CUT AND REMOVE RIGHT SIDE OF EXISTING BRIDGE TO LIMITS SHOWN(SEE TMP-3), AND INSTALL TEMPORARY GUARDRAIL FROM -L- STA 12+80 +/_ TO STA 13+90 +/_.(SEE TMP-3)

--ACTIVATE PORTABLE TRAFFIC SIGNALS AND DIRECT SR 1102(PEARSON FALLS ROAD) TRAFFIC INTO A ONE LANE, TWO-WAY PATTERN IN THE EXISTING WESTBOUND LANE OF SR 1102(PEARSON FALLS ROAD)(SEE TMP-4)

STEP 3: - REMOVE EASTBOUND SIDE OF EXISTING STRUCTURES(SEE STRUCTURE PLANS).

--INSTALL TEMPORARY SHORING(SEE TMP-3)

--INSTALL TEMPORARY SHORING NO.1 BEHIND TEMPORARY GUARDRAIL FROM -L- STA 13+02 +/- TO STA 13+20 +/-.(SEE TMP-3)

--INSTALL TEMPORARY SHORING NO. 2 BEHIND TEMPORARY GUARDRAIL FROM -L- STA 13+45 +/- TO STA 13+62 +/-.(SEE TMP-3)

STEP 4: - CONSTRUCT -L- (SR 1102 PEARSON FALLS ROAD) FROM STA 11+00 TO STA 16+00

--EASTBOUND LANE EXCLUDING FINAL PAVEMENT LAYER.

--CONSTRUCT TEMPORARY PAVEMENT ON EACH SIDE OF BRIDGE.

--CONSTRUCT STRUCTURES PER THE STRUCTURE PLANS STAGE 1.

PHASE II

NOTE: STEP 1 SHALL BE COMPLETED IN A CONTINUOUS OPERATION.

STEP 1: - USING ROWY STD 1101.02 SHEET 1 OF 15, PERFORM THE FOLLOWING ON SR 1102:

--REMOVE, AS NECESSARY, PAVEMENT MARKINGS PLACED IN STEP 2 PHASE I, AND PLACE TMPORARY PAVEMENT MARKINGS(PAINT) FROM -L- STA 10+20 +/- TO STA 16+80 +/-.(SEE TMP-4)

--INSTALL TEMPORARY GUARDRAIL FROM -L- STA 12+90 +/- TO STA 13+80 +/-(SEE TMP-4), AND REMOVE GUARDRAIL PLACED IN STEP 2 PHASE 1.

--ACTIVATE PORTABLE TRAFFIC SIGNALS AND DIRECT SR 1102(PEARSON FALLS ROAD) TRAFFIC INTO A ONE LANE, TWO-WAY PATTERN IN THE EASTBOUND LANE OF SR 1102(PEARSON FALLS ROAD)(SEE TMP-4)

STEP 2: - REMOVE WESTBOUND SIDE OF EXISTING STRUCTURES(SEE STRUCTURE PLANS).

--REMOVE TEMPORARY SHORING.

STEP 3: - CONSTRUCT -L- (SR 1102 PEARSON FALLS ROAD) FROM STA 10+00 TO STA 16+00 WESTBOUND LANE EXCLUDING FINAL PAVEMENT LAYER.

--CONSTRUCT STRUCTURES PER THE STRUCTURE PLANS STAGE 2.

STEP 4: - USING RDWY STD 1101.02 SHEET 1 OF 15, CONSTRUCT GUARDRAIL, PLACE THE FINAL LAYER OF SURFACE COURSE, AND THE FINAL PAVEMENT MARKINGS (PAINT) ON THE ENTRE PROJECT.

STEP 5: - REMOVE ALL TEMPORARY TRAFFIC CONTROL DEVICES.

--OPEN SR 1102 PEARSON FALLS ROAD TO 2-LINE, 2-WAY TRAFFIC.

V&M
Vaughn & Melton
Consulting Engineers
Asheville, North Carolina 828-253-2796
Charlotte, North Carolina 704-837-7885
Tri-Cities, Tennessee 423-467-8401
Knoxville, Tennessee 865-546-5800
Middlesboro, Kentucky 606-248-6600
Spartanburg, South Carolina 864-574-4775
Copyright © 2006 Vaughn & Melton, Inc. All Rights Reserved

APPROVED: DATE: 7/2/2012

SEAL

NORTH CAROLINA PROFESSIONAL SEAL 20119 ENGINEER LLOYD D. BROWN

DIVISION OF HIGHWAYS STATE OF NORTH CAROLINA DEPARTMENT OF TRANSPORTATION WORK ZONE TRAFFIC CONTROL

PHASING

$$$$$SYSTIME$$$$$
$$$$$$$$$$$$$$$$DGN$$$$$$$$$$$$$$$$$
$$$$$USERNAME$$$

PROJ. REFERENCE NO.	SHEET NO.
BD-5114M	TMP-3

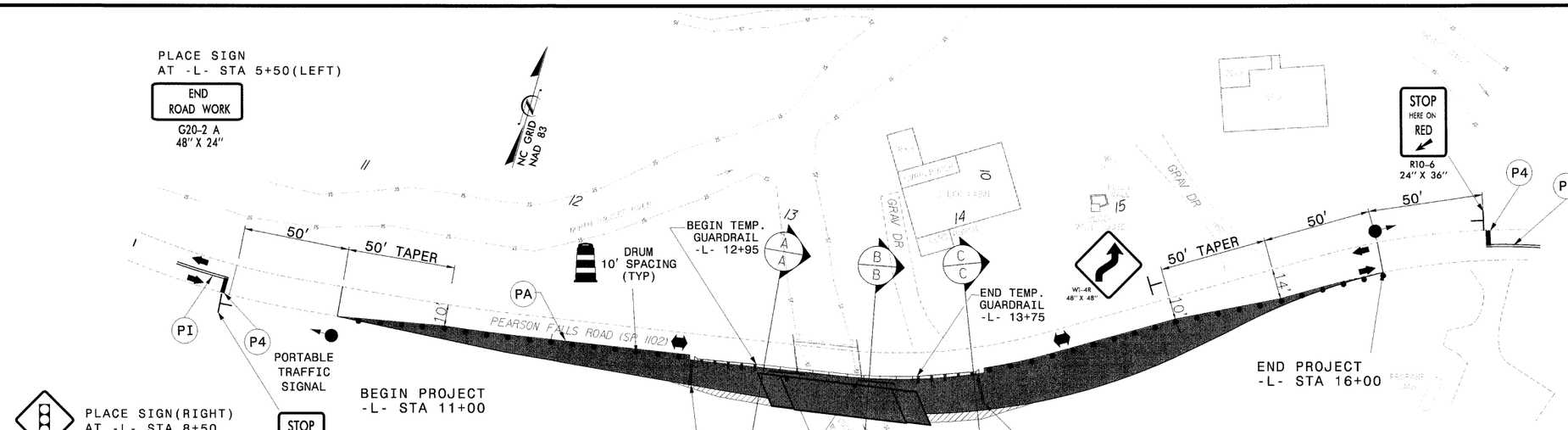

PLACE SIGN(RIGHT)
AT -L- STA 8+50

PLACE SIGN(RIGHT)
AT -L- STA 6+50

PLACE SIGN(RIGHT)
AT -L- STA 5+50

R11-2
48" x 30"
ROAD CLOSED
TYPE III BARRICADE

R11-2
48" x 30"
ROAD CLOSED
TYPE III BARRICADE

R11-2
48" x 30"
ROAD CLOSED
TYPE III BARRICADE

R11-2
48" x 30"
ROAD CLOSED
TYPE III BARRICADE

PLACE SIGN(LEFT)
AT -L- STA 18+50

PLACE SIGN(LEFT)
AT -L- STA 20+50

PLACE SIGN(LEFT
AT -L- STA 21+50

PLACE SIGN(RIGHT)
AT -L- STA 21+50

END ROAD WORK
G20-2 A
48" X 24"

30 15 0 30 60
SCALE 1"=30'

NOTES:
1. ADVISORY SPEED PANEL (25 MPH, SIGN W13-1) SHALL PORTRAY A SPEED AS DETERMINED BY THE ENGINEER.
2. REFER TO TRAFFIC CONTROL DETAIL DRAWINGS FOR PLACEMENT OF PAVEMENT MARKINGS.

WORK AREA

TEMP. WIDENING/PAVEMENT

SECTION A-A

-L- STA 13+00

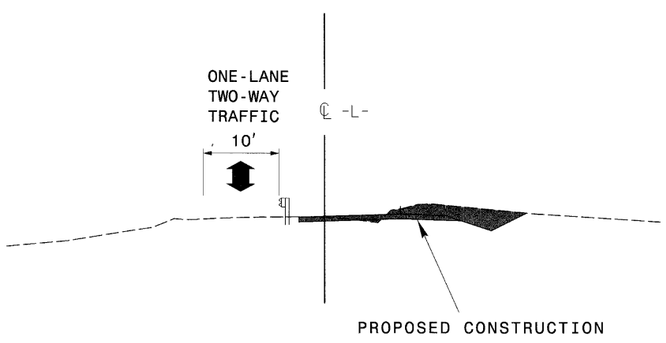

SECTION B-B

-L- STA 13+50

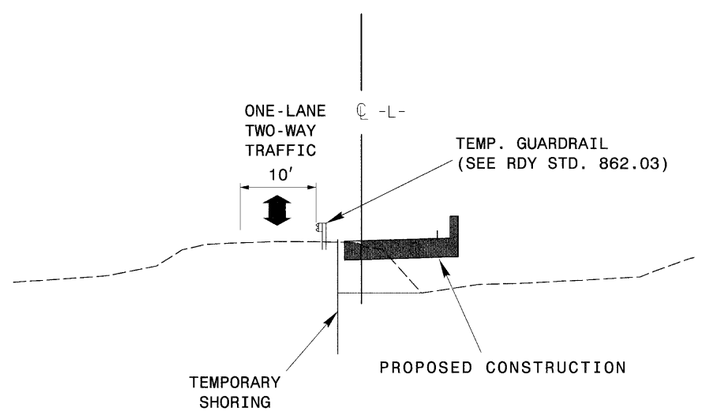

SECTION C-C

-L- STA 14+00

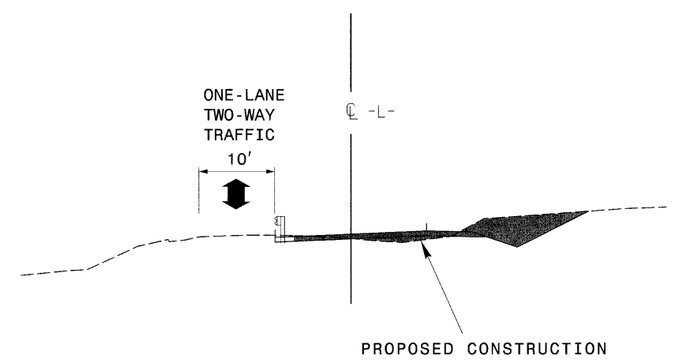

APPROVED: DATE: 7/2/2012

SEAL

NORTH CAROLINA PROFESSIONAL SEAL 20119 ENGINEER LLOYD D. BROWN

DIVISION OF HIGHWAYS STATE OF NORTH CAROLINA DEPARTMENT OF TRANSPORTATION WORK ZONE TRAFFIC CONTROL

PHASE 1

$$$$$$$SYSTIME$$$$$$
$$$$$$$$$$$$$$$$DGN$$$$$$$$$$$$$$$$$$
$$$USERNAME$$$$

PROJ. REFERENCE NO.	SHEET NO.
BD-5114M	TMP-4

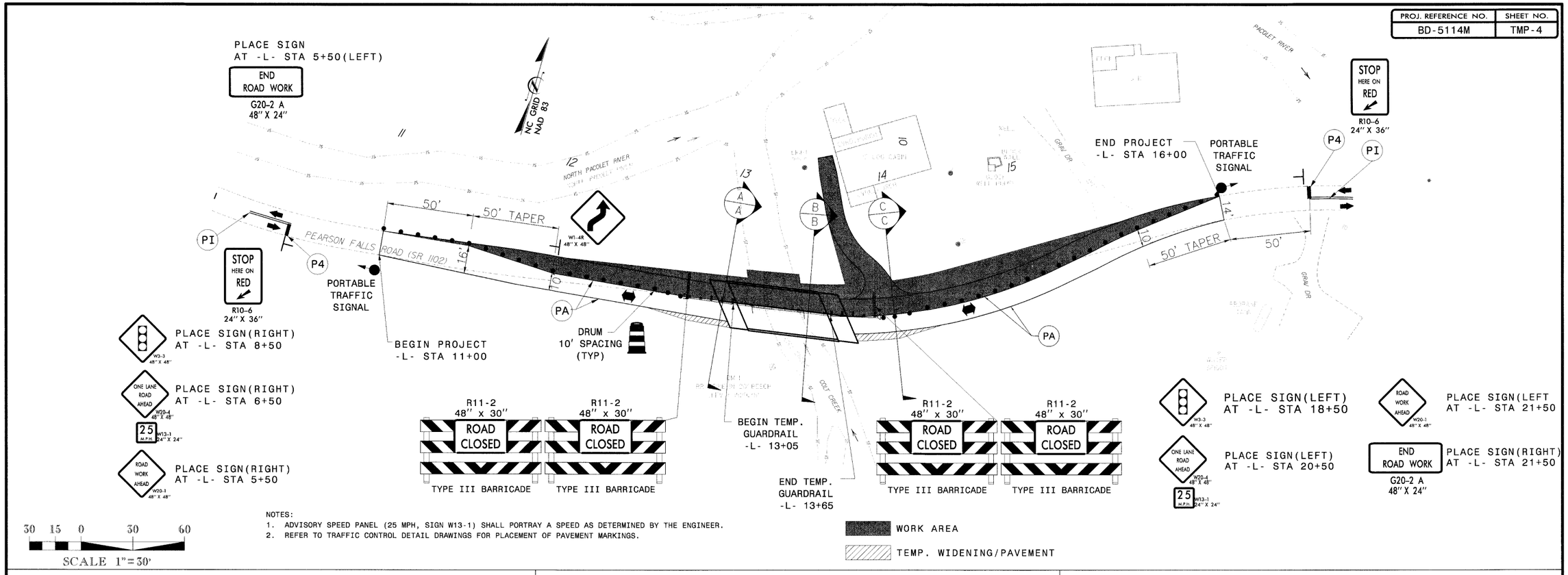

NOTES:
1. ADVISORY SPEED PANEL (25 MPH, SIGN W13-1) SHALL PORTRAY A SPEED AS DETERMINED BY THE ENGINEER.
2. REFER TO TRAFFIC CONTROL DETAIL DRAWINGS FOR PLACEMENT OF PAVEMENT MARKINGS.

SECTION A-A

-L- STA 13+00

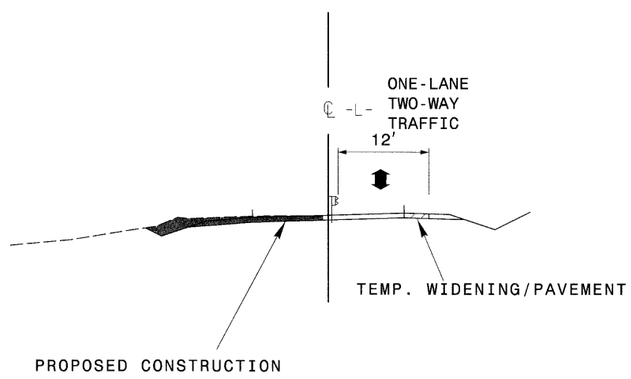

SECTION B-B

-L- STA 13+50

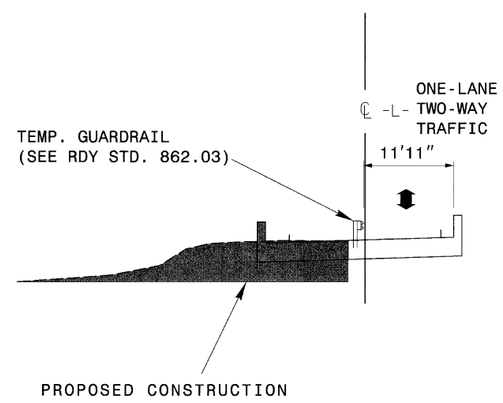

SECTION C-C

-L- STA 14+00

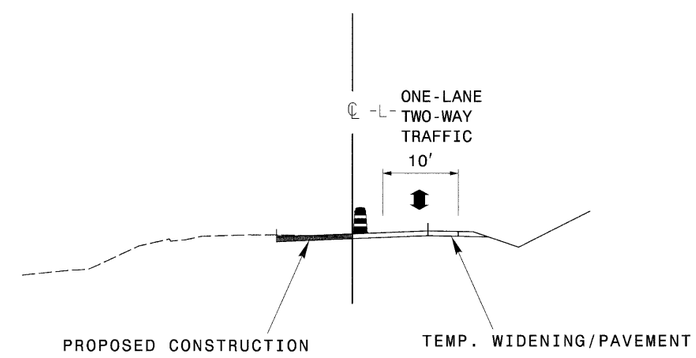

APPROVED: DATE: 7/2/2019

SEAL

NORTH CAROLINA PROFESSIONAL SEAL 20119 ENGINEER LLOYD D. BROWN

DIVISION OF HIGHWAYS STATE OF NORTH CAROLINA DEPARTMENT OF TRANSPORTATION WORK ZONE TRAFFIC CONTROL

PHASE 2

$$$$$$SYSTIME$$$$$$
$$$$$$$$$$$$$$$$$$DGN$$$$$$$$$$$$$$$$$$
$$$$USERNAME$$$$

PROJECT REFERENCE NO.	SHEET NO.
BD-5114M	SIG. 1

PHASING DIAGRAM

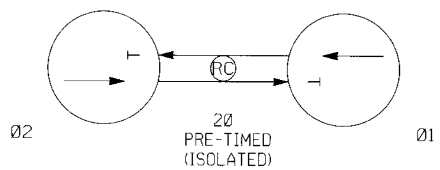

PHASING DIAGRAM DETECTION LEGEND

- DETECTED MOVEMENT
- UNDETECTED MOVEMENT (OVERLAP)
- UNSIGNALIZED MOVEMENT
- PEDESTRIAN MOVEMENT

TABLE OF OPERATION

SIGNAL FACE	Ø2 R/W	Ø2 CLEAR Ø1 1	Ø2 CLEAR Ø1 2	Ø1 R/W	Ø1 CLEAR Ø2 1	Ø1 CLEAR Ø2 2	FLASH
11,12	R	R	R	G	Y	R	R
21,22	G	Y	R	R	R	R	R

SIGNAL FACE I.D.

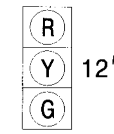

11, 12
21, 22

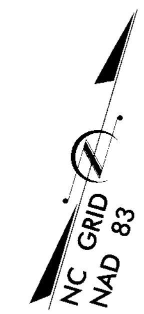

NOTES

1. PORTABLE TEMPORARY INSTALLATION.
2. SIGNAL HEADS SHALL BE NO CLOSER THAN 40 FEET FROM THE STOPLINE.
3. NO COUNTS AVAILABLE.
4. CONTRACTOR TO UTILIZE NCDOT PRE-APPROVED PORTABLE TRAFFIC SIGNAL MANUFACTURER AND MODEL.

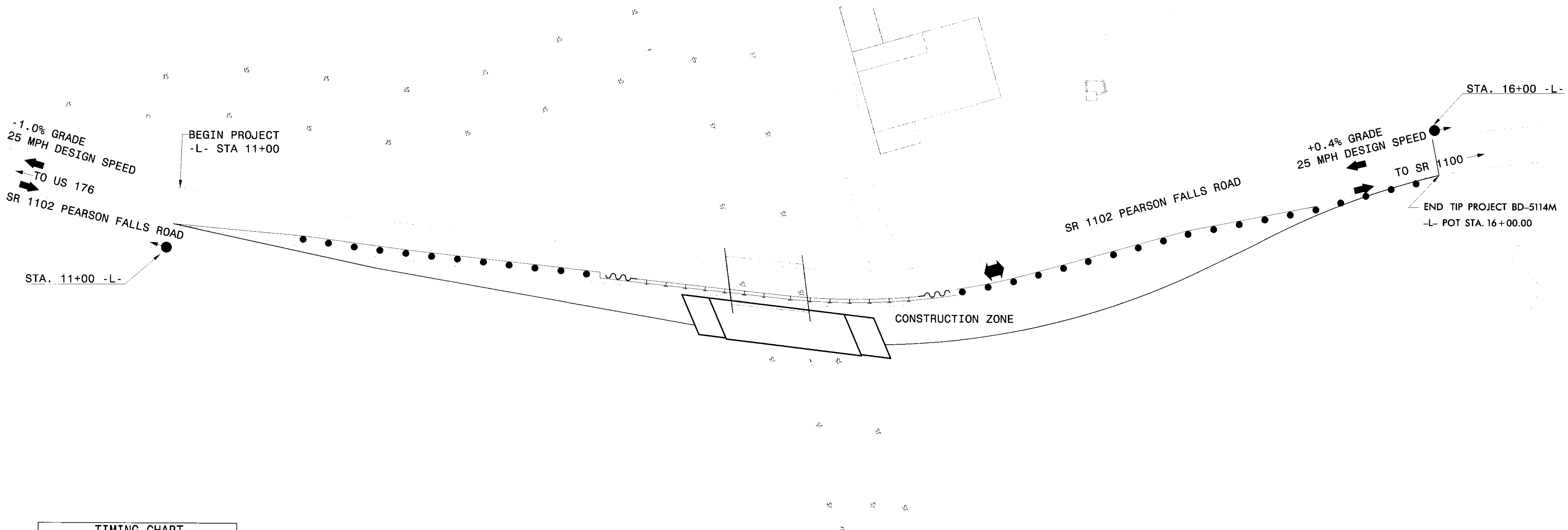

TIMING CHART

NEMA CONTROLLER

PHASE	Ø1	Ø2
MINIMUM GREEN	40 SEC.	40 SEC.
PASSAGE/GAP	0 SEC.	0 SEC.
YELLOW CHANGE INT.	4.0 SEC.	4.0 SEC.
RED CLEARANCE	18 SEC.	18 SEC.
MAX. 1	40 SEC.	40 SEC.
RECALL POSITION	MAX. RECALL	MAX. RECALL
VEHI. CALL MEMORY	-	-

Prepared in the Offices of:

Vaughn & Melton
Consulting Engineers

Asheville, North Carolina 828-253-2796
Charlotte, North Carolina 704-357-0488
Tri-Cities, Tennessee 423-467-8401
Knoxville, Tennessee 865-546-5800
Middlesboro, Kentucky 606-248-6600
Spartanburg, South Carolina 864-574-4775

Copyright © 2006 Vaughn & Melton, Inc. All Rights Reserved

SCALE 0 20

PORTABLE TRAFFIC SIGNAL PLAN
SR 1102 PEARSON FALLS ROAD

DIV. 14 POLK COUNTY

PLAN DATE:	5/15/12	REVIEWED BY:	LDB
PREPARED BY:	ACC	REVIEWED BY:	

REVISIONS	INIT.	DATE

SEAL

NORTH CAROLINA PROFESSIONAL SEAL 20119 ENGINEER LLOYD D. BROWN

SIGNATURE 7/2/2012 DATE

SIG. INVENTORY NO.

PROJECT REFERENCE NO.	SHEET NO.
BD-5114M	EC-1
R/W SHEET NO.	

ROADSIDE ENVIRONMENTAL UNIT
DEPARTMENT OF TRANSPORTATION
DIVISION OF HIGHWAYS
RALEIGH, N.C.

2012 STANDARD SPECIFICATIONS

EROSION CONTROL PLAN

THESE EROSION AND SEDIMENT CONTROL PLANS COMPLY WITH THE REGULATIONS SET FORTH BY THE NCG-010000 GENERAL CONSTRUCTION PERMIT EFFECTIVE AUGUST 3, 2011 ISSUED BY THE NORTH CAROLINA DEPARTMENT OF ENVIRONMENT AND NATURAL RESOURCES DIVISION OF WATER QUALITY.

N
NC GRID
NAD 83/NSRS 2007

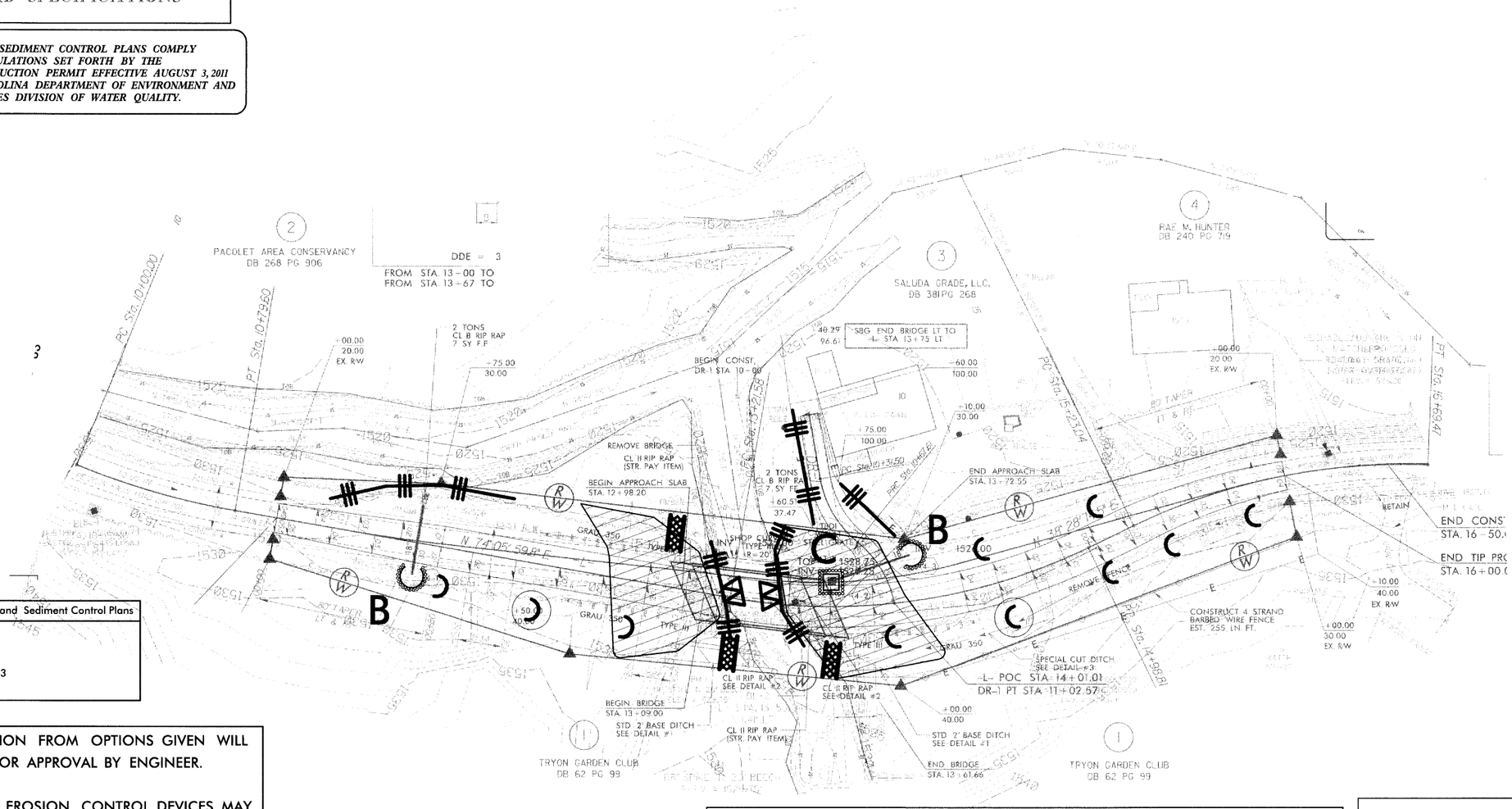

Level III-A: Designer of Erosion and Sediment Control Plans
Aaron Carver, P.E. Date Issued: May 2, 2007 Date Expires: December 31, 2013 Certification Number: 302

NOTES: ANY DEVIATION FROM OPTIONS GIVEN WILL REQUIRE PRIOR APPROVAL BY ENGINEER.

ADDITIONAL EROSION CONTROL DEVICES MAY NEED TO BE INSTALLED AS DIRECTED BY THE ENGINEER.

Std. #	Description	Symbol
	Rock Pipe Inlet Sediment Trap Type-B	B
1605.01	Temporary Silt Fence	
1606.01	Special Sediment Control Fence	
1632.03	Rock Inlet Sediment Trap Type C	
1633.01	Temporary Rock Silt Check Type-A	
	Wattle	
	Wattle with Polyacrylamide (PAM)	

ENVIRONMENTALLY SENSITIVE AREA
PLEASE SEE HIGH QUALITY WATERS NOTE

PROJECT NO. BD-5114M
COUNTY POLK
STATION: 13+36.10

STATE OF NORTH CAROLINA
DEPARTMENT OF TRANSPORTATION
RALEIGH

BRIDGE #003 ON SR 1102
OVER COLT CREEK

REVISIONS						SHEET NO.
NO.	BY	DATE	NO.	BY	DATE	EC-1
1			3			TOTAL SHEETS
2			4			1

PROJECT REFERENCE NO.	SHEET NO.
BD-5114M	EC-1A
R/W SHEET NO.	
ROADWAY DESIGN ENGINEER	HYDRAULICS ENGINEER

WATTLE WITH POLYACRYLAMIDE DETAIL

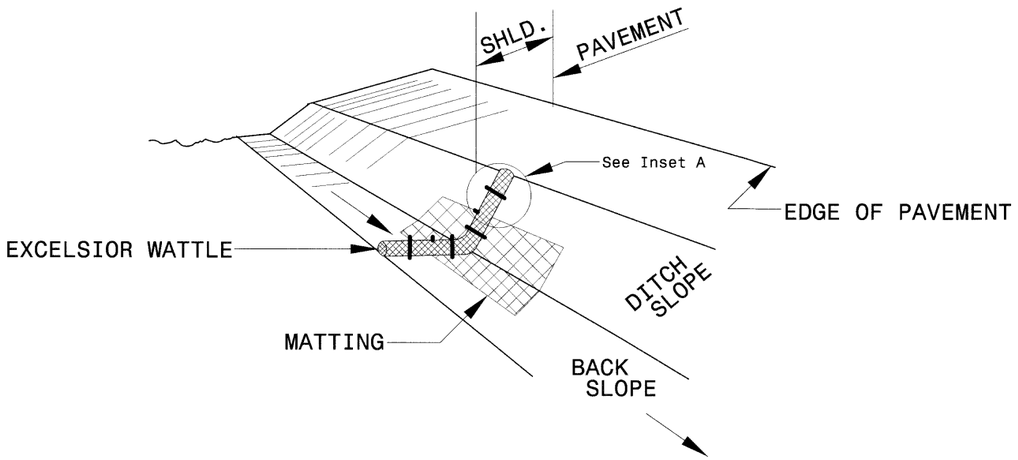

ISOMETRIC VIEW

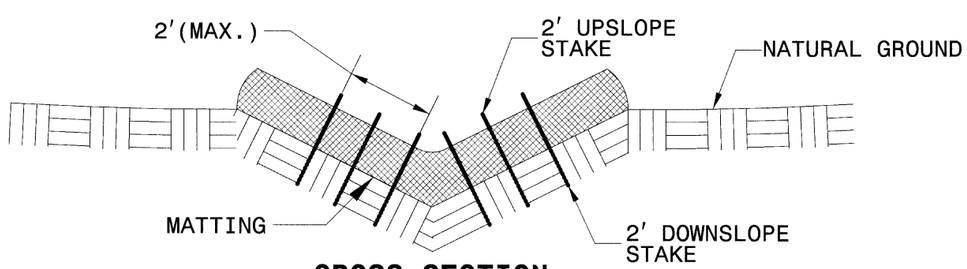

CROSS SECTION VEE DITCH

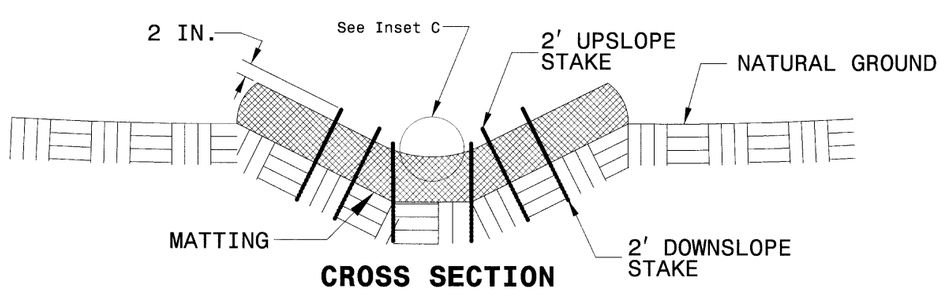

CROSS SECTION TRAPEZOIDAL DITCH

NOTES:

USE MINIMUM 12 IN. DIAMETER EXCELSIOR WATTLE.

USE 2 FT. WOODEN STAKES WITH A 2 IN. BY 2 IN. CROSS SECTION.

ONLY INSTALL WATTLE(S) TO A HEIGHT IN DITCH SO FLOW WILL NOT WASH AROUND WATTLE AND SCOUR DITCH SLOPES AND AS DIRECTED.

INSTALL A MINIMUM OF 2 UPSLOPE STAKES AND 4 DOWNSLOPE STAKES AT AN ANGLE TO WEDGE WATTLE TO BOTTOM OF DITCH.

PROVIDE STAPLES MADE OF 0.125 IN. DIAMETER STEEL WIRE FORMED INTO A U SHAPE NOT LESS THAN 12" IN LENGTH.

INSTALL STAPLES APPROXIMATELY EVERY 1 LINEAR FOOT ON BOTH SIDES OF WATTLE AND AT EACH END TO SECURE IT TO THE SOIL.

INSTALL MATTING IN ACCORDANCE WITH SECTION 1631 OF THE STANDARD SPECIFICATIONS.

PRIOR TO POLYACRYLAMIDE (PAM) APPLICATION, OBTAIN A SOIL SAMPLE FROM PROJECT LOCATION, AND FROM OFFSITE MATERIAL, AND ANALYZE FOR APPROPRIATE PAM FLOCCULANT TO BE APPLIED TO EACH WATTLE.

INITIALLY APPLY 3.5 OUNCES OF ANIONIC OR NEUTRALLY CHARGED POLYACRYLAMIDE (PAM) OVER WATTLE WHERE WATER WILL FLOW AND AFTER EVERY RAINFALL EVENT THAT IS EQUAL TO OR EXCEEDS 0.50 IN.

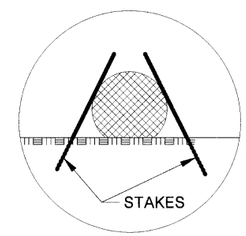

INSET A

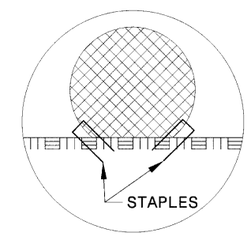

INSET B

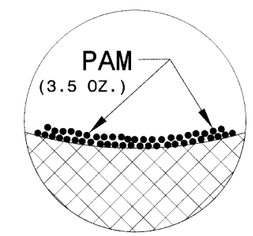

INSET C

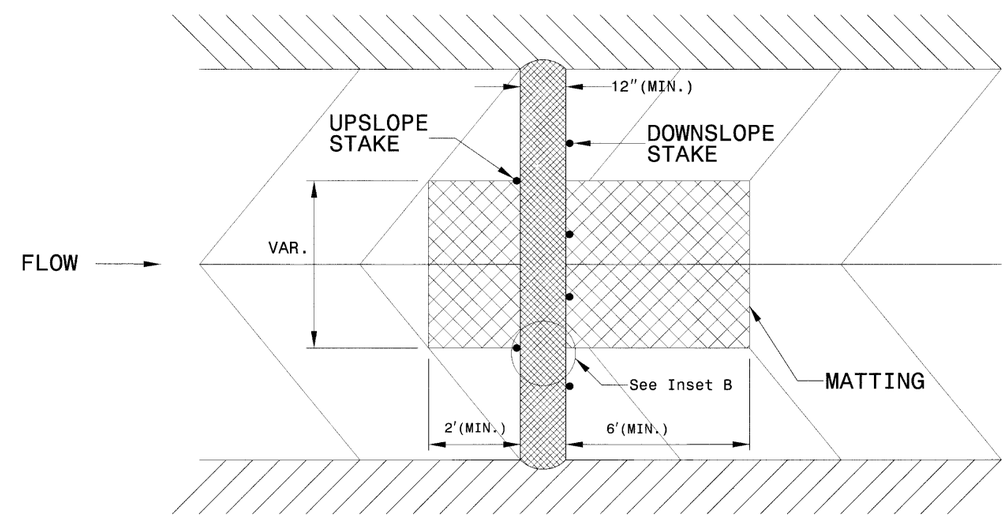

TOP VIEW

PROJECT REFERENCE NO.	SHEET NO.
BD-5114M	EC-2
R/W SHEET NO.	
ROADWAY DESIGN ENGINEER	HYDRAULICS ENGINEER

STATE OF NORTH CAROLINA
DIVISION OF HIGHWAYS

SOIL STABILIZATION TIMEFRAMES

SITE DESCRIPTION	STABILIZATION TIME	TIMEFRAME EXCEPTIONS
PERIMETER DIKES, SWALES, DITCHES, AND SLOPES	7 DAYS	NONE
HIGH QUALITY WATER (HQW) ZONES	7 DAYS	NONE
SLOPES STEEPER THAN 3:1	7 DAYS	IF SLOPES ARE 10' OR LESS IN LENGTH AND ARE NOT STEEPER THAN 2:1, 14 DAYS ARE ALLOWED.
SLOPES 3:1 OR FLATTER	14 DAYS	7 DAYS FOR SLOPES GREATER THAN 50' IN LENGTH.
ALL OTHER AREAS WITH SLOPES FLATTER THAN 4:1	14 DAYS	NONE, EXCEPT FOR PERIMETERS AND HQW ZONES.

COMPUTED BY: ACC	DATE: 10-28-11
CHECKED BY: ACC	DATE: 10-28-11

PROJECT REFERENCE NO.	SHEET NO.
BD-5114M	X-0

NORTH CAROLINA PROFESSIONAL SEAL 030453 ENGINEER AARON E. CARLING

7-2-12

DIVISION OF HIGHWAYS
STATE OF NORTH CAROLINA

CROSS SECTION SUMMARY

IN CUBIC YARDS

-L- LOCATION	UNCLASSIFIED EXCAVATION	EMBT
11+00	0	0
11+25	9	1
11+50	18	5
11+75	22	7
12+00	28	5
12+25	51	2
12+50	91	2
12+75	129	2
13+00	96	1
13+09 BEGIN BRIDGE	17	0
13+61.66 END BRIDGE	9	1
13+75	17	4
14+00	29	11
14+25	46	3
14+50	61	0
14+75	56	0
15+00	30	2
15+25	20	2
15+50	35	2
15+75	53	2
16+00	36	2

-DR-1- LOCATION	UNCLASSIFIED EXCAVATION	EMBT
10+00	0	0
10+10	1	0
10+20	2	0
10+30	1	0
10+40	0	1
10+50	1	1
10+60	5	2
10+70	10	3
10+80	12	1
10+90	12	0
10+92.36	3	0

NOTE: EMBANKMENT COLUMN DOES NOT INCLUDE BACKFILL FOR UNDERCUT.

Approximate quantities only. Unclassified excavation, borrow excavation, fine grading, clearing and grubbing, and removal of existing pavement will be paid for at the contract lump sum price for "grading".

8/23/99

0 2.5 5	PROJ. REFERENCE NO.	SHEET NO.
	BD-5114M	X-1

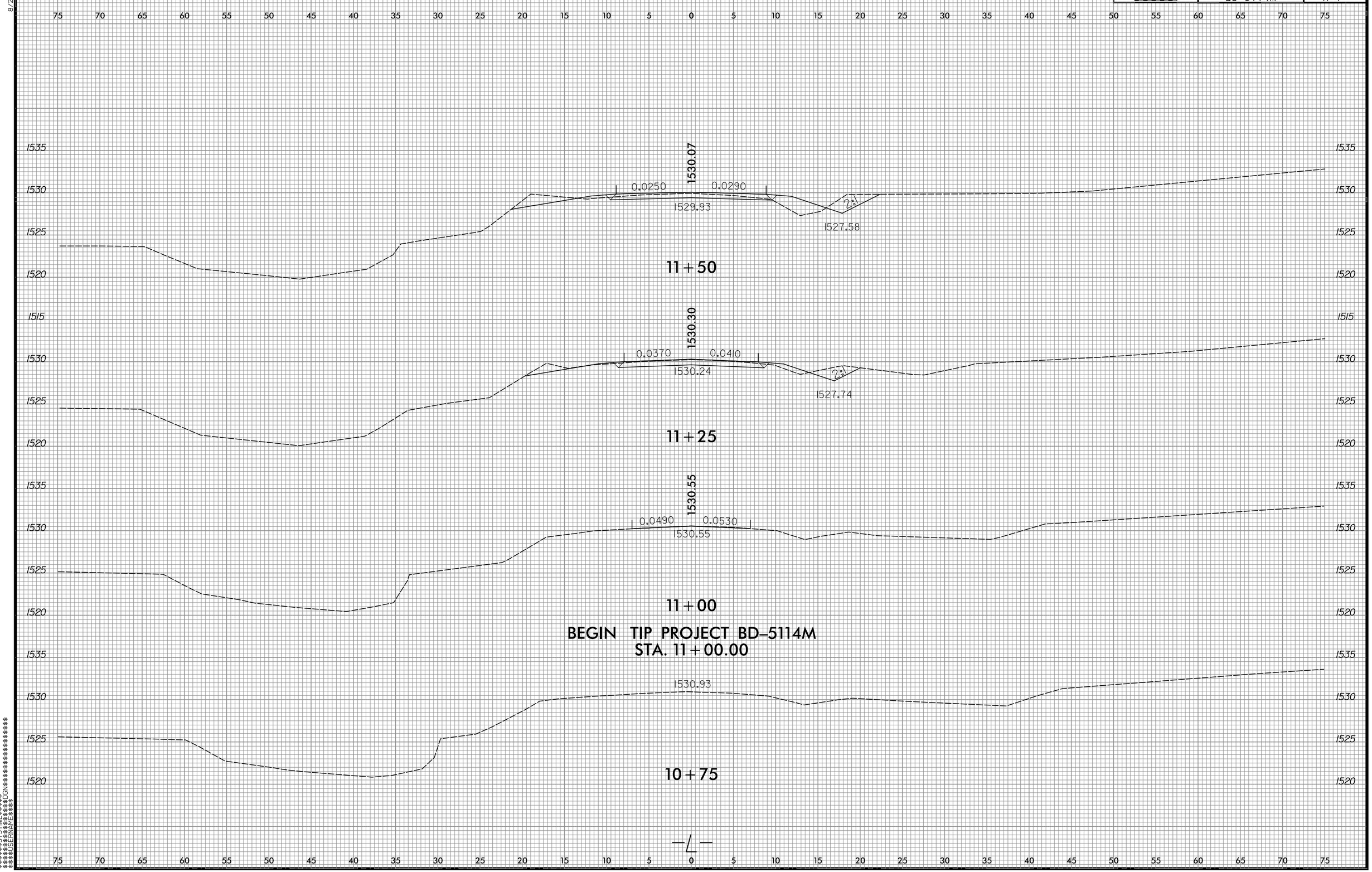

$$$$SYSTIME$$$$
$$$$DGNNAME$$$$

8/23/99

0 2.5 5	PROJ. REFERENCE NO.	SHEET NO.
	BD-5114M	X-2

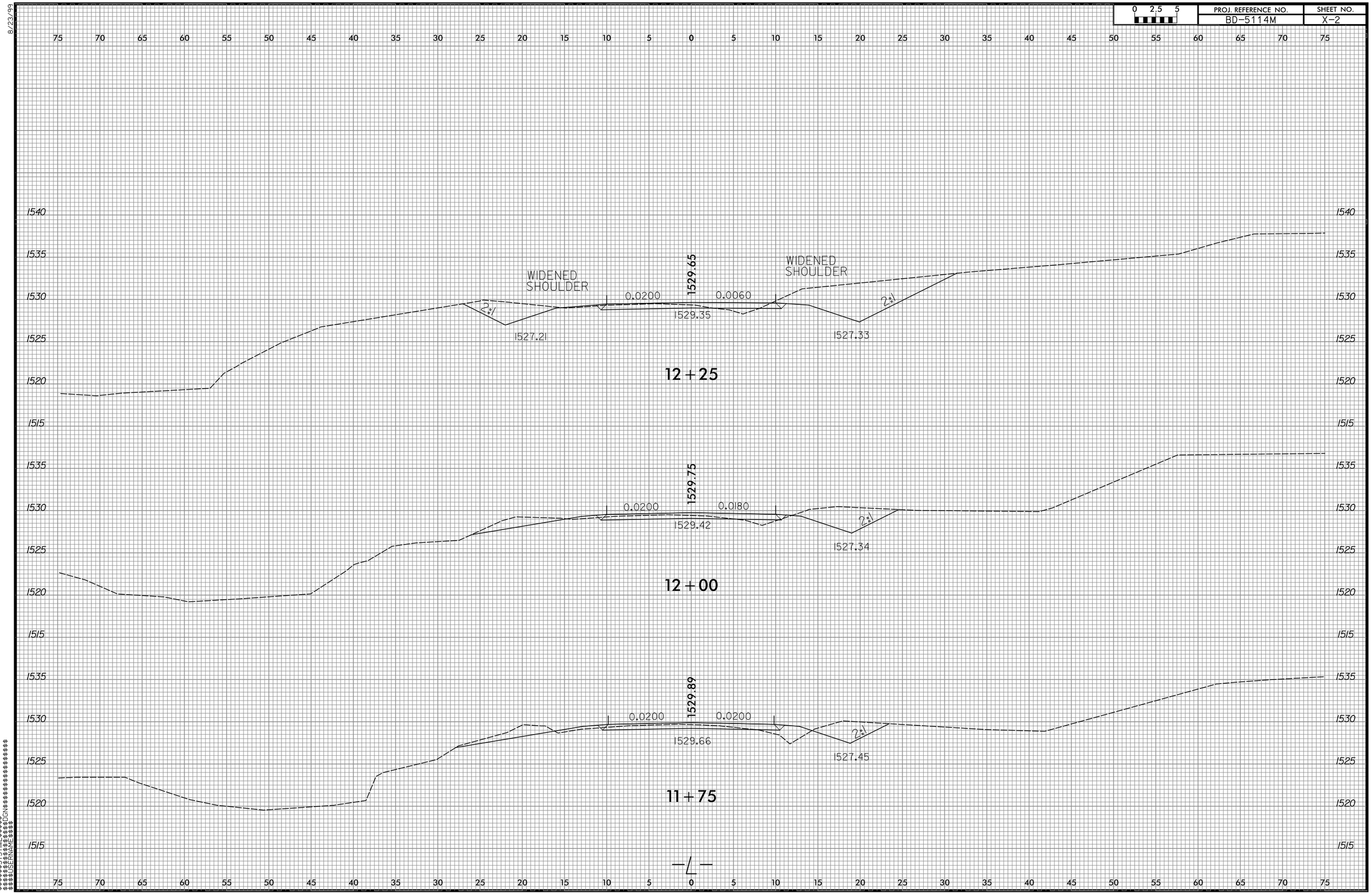

$$$$SYSTIME$$$$
$$$$SCNAME$$$$
$$$$DGNFILE$$$$

0 2.5 5	PROJ. REFERENCE NO.	SHEET NO.
	BD-5114M	X-3

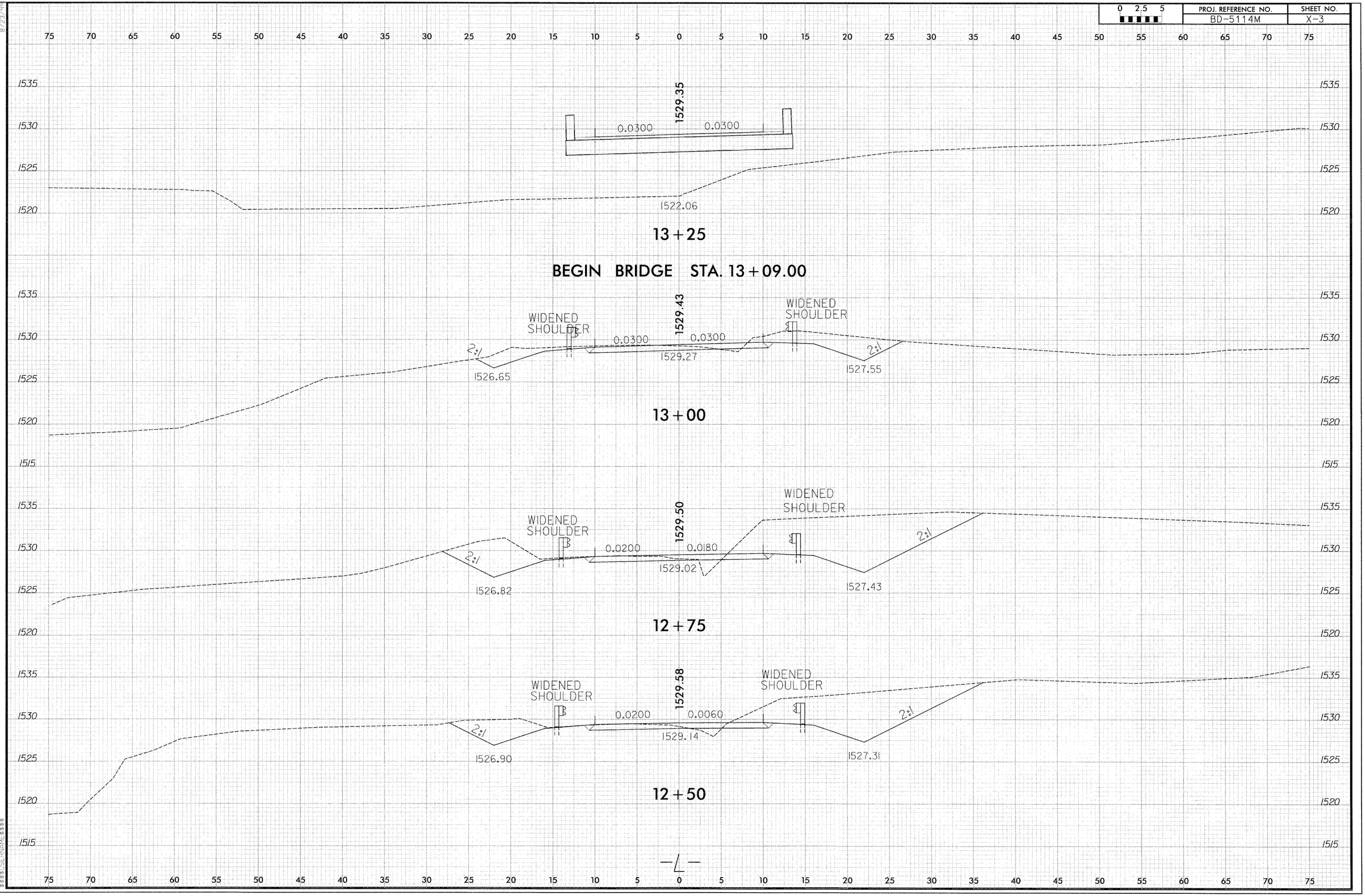

$$$$$SYSTIME$$$$
$$$$$DGN$$$$$$$$$$$$$$$$
$$$$$ENGINE$$$$

0 2.5 5	PROJ. REFERENCE NO.	SHEET NO.
	BD-5114M	X-4

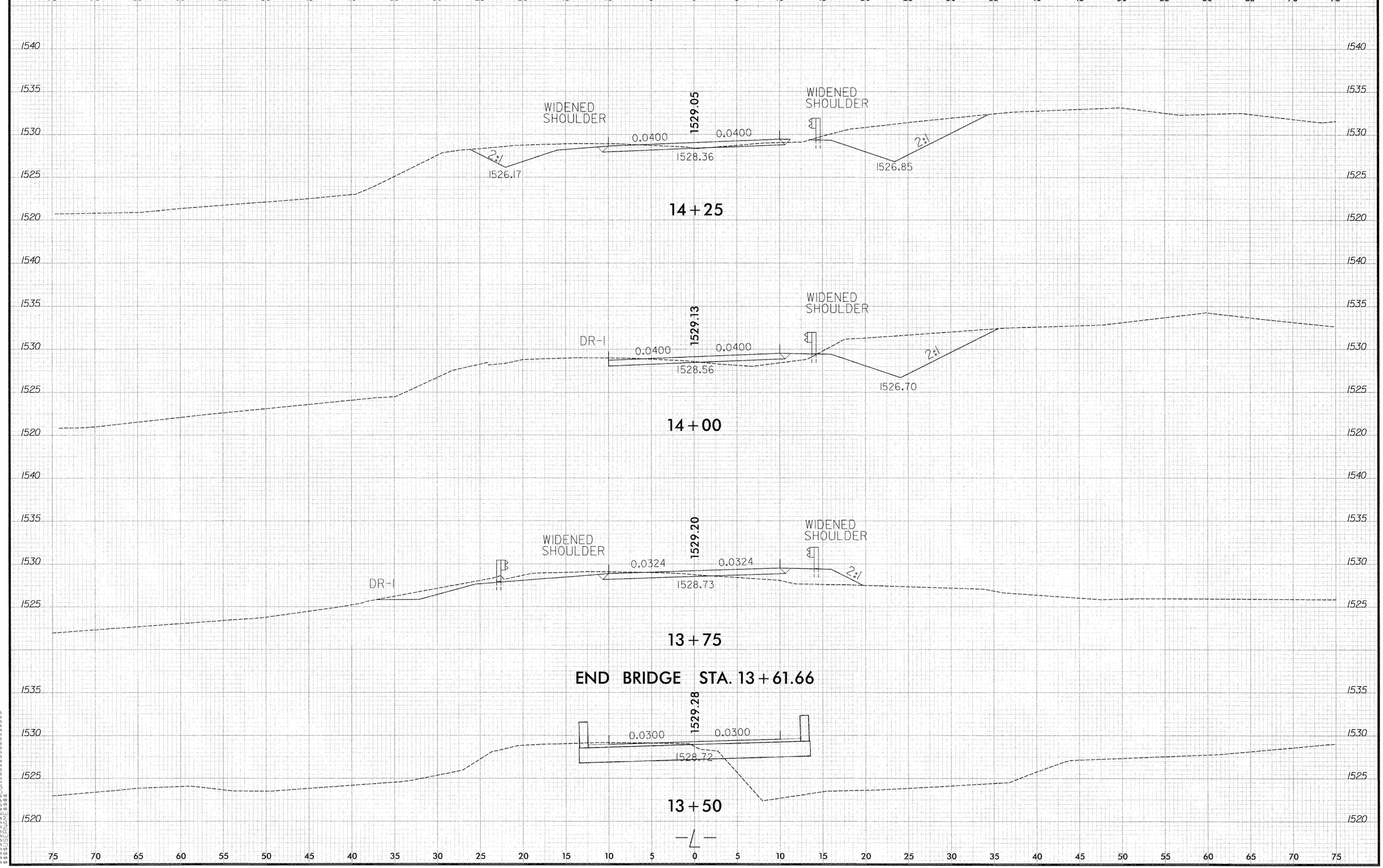

8/23/99

$$$$SYSTIME$$$$
$$$$DGN$$$$
$$$$DATE$$$$
$$$$USERNAME$$$$

PROJ. REFERENCE NO.	SHEET NO.
BD-5114M	X-5

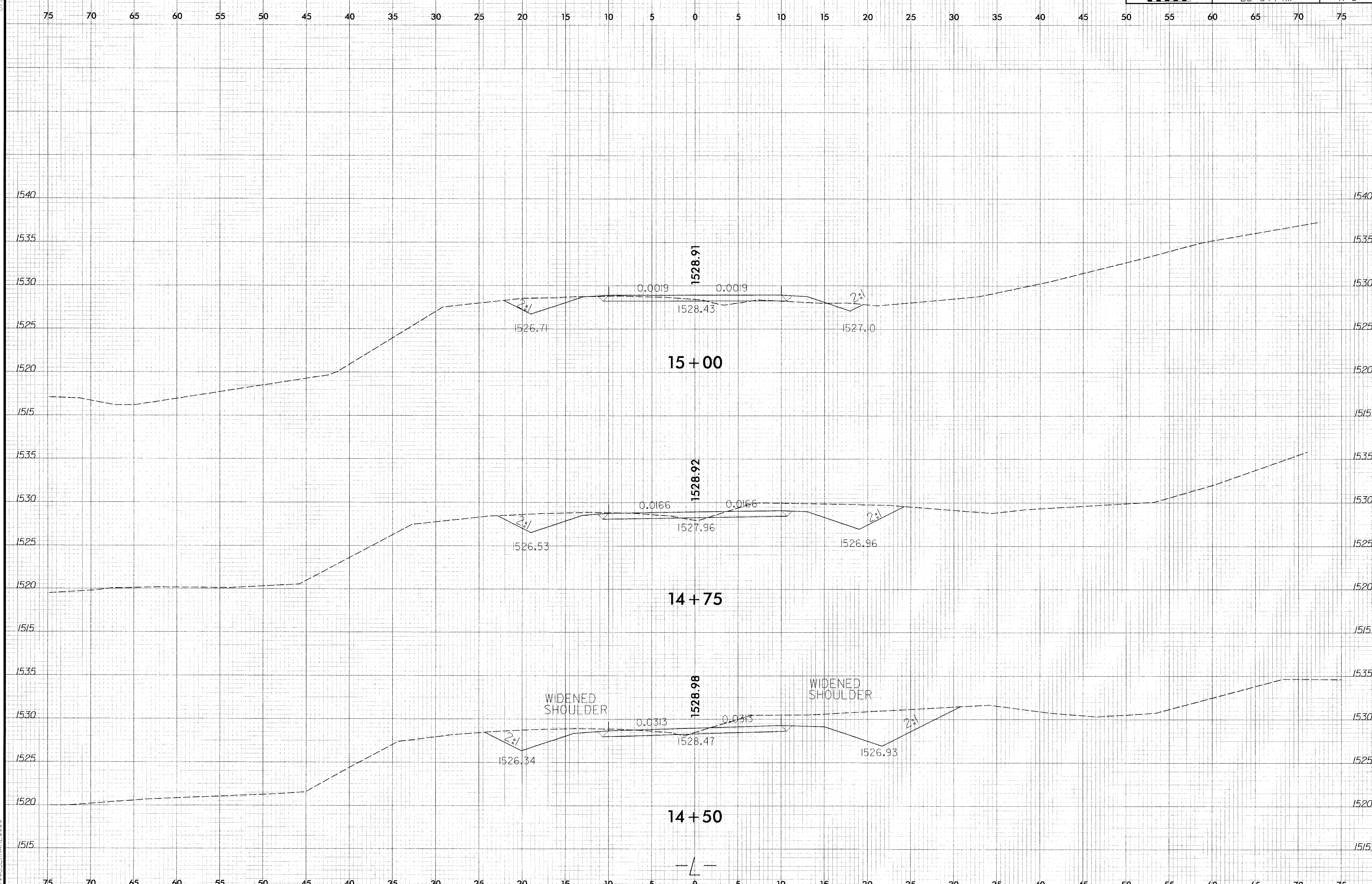

0 2.5 5	PROJ. REFERENCE NO.	SHEET NO.
	BD-5114M	X-6

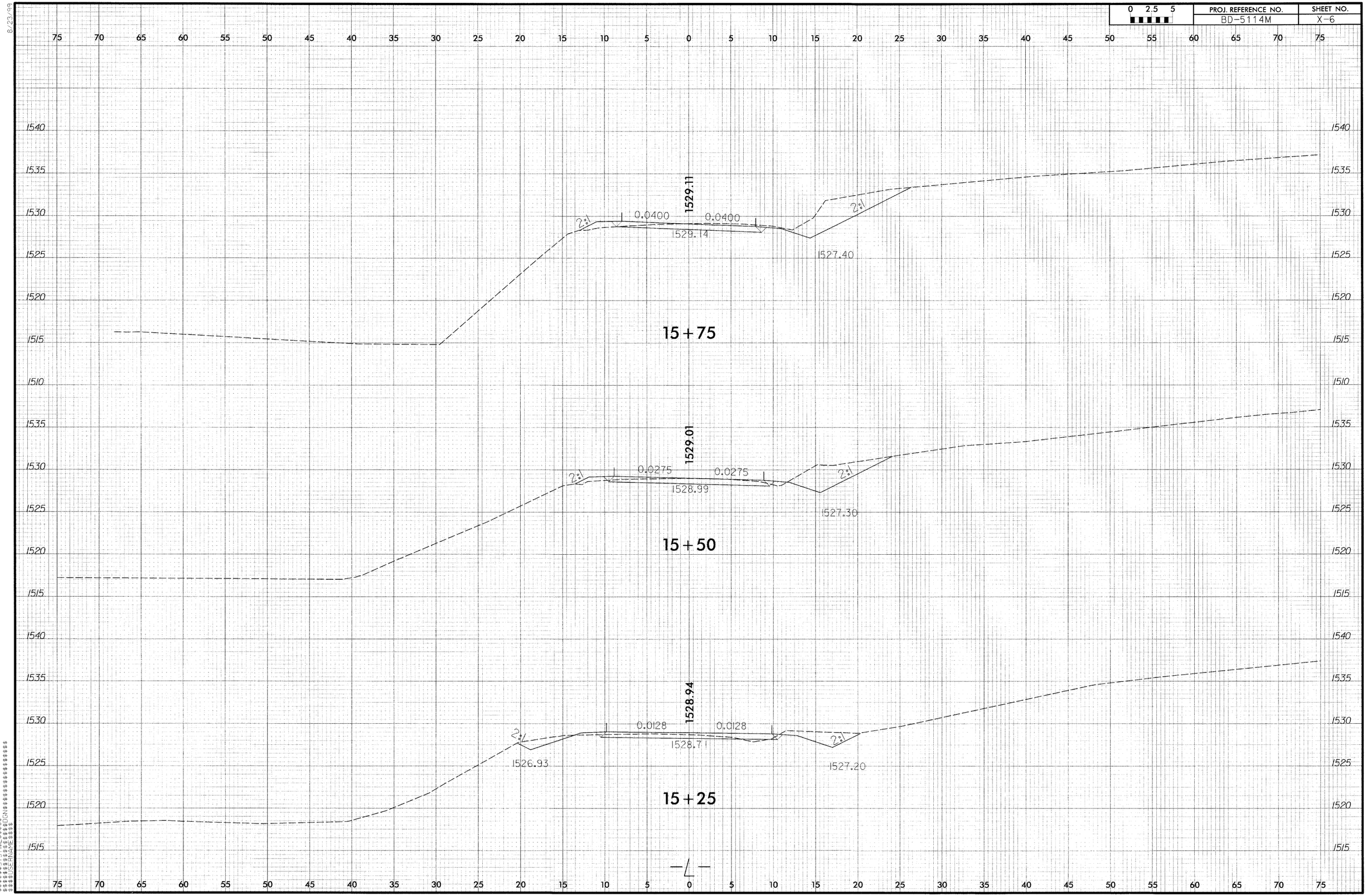

8/23/99

$$$$SYSTIME$$$$
$$$$$$$$$$$$DGN$$$$$$$$$$$$$$$$$$$$
$$$$$$$$$$$$ENVE$$$$

0 2.5 5	PROJ. REFERENCE NO.	SHEET NO.
	BD-5114M	X-7

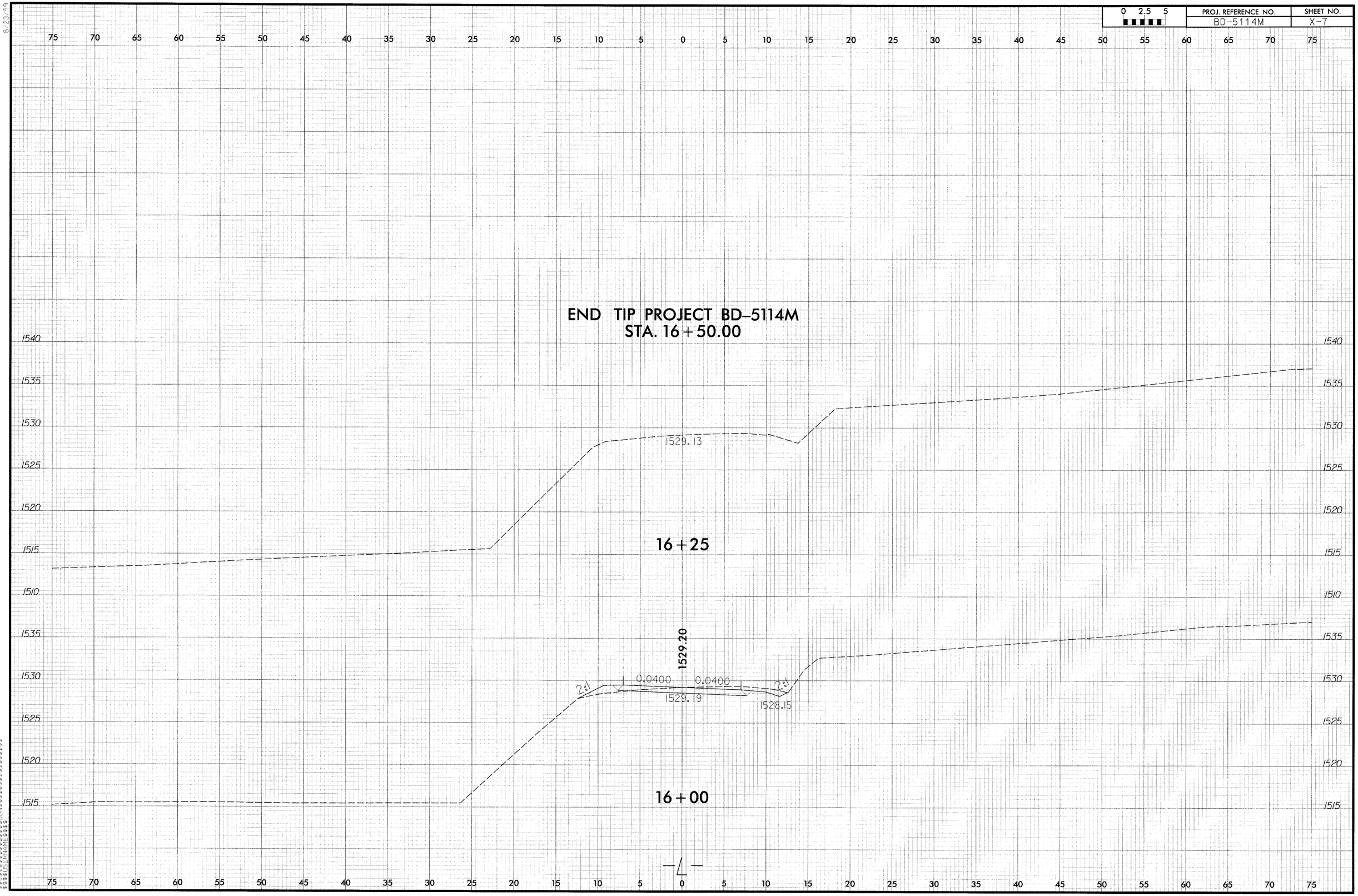

8/23/99
$$$$$$$SYSTIME$$$$$$
$$$$$$$$$$$$$$$DGN$$$$$$$$$$$$$$$$$$$$
$$$$$$USERNAME$$$$

8/23/99

0 2.5 5	PROJ. REFERENCE NO.	SHEET NO.
	BD-5114M	X-8

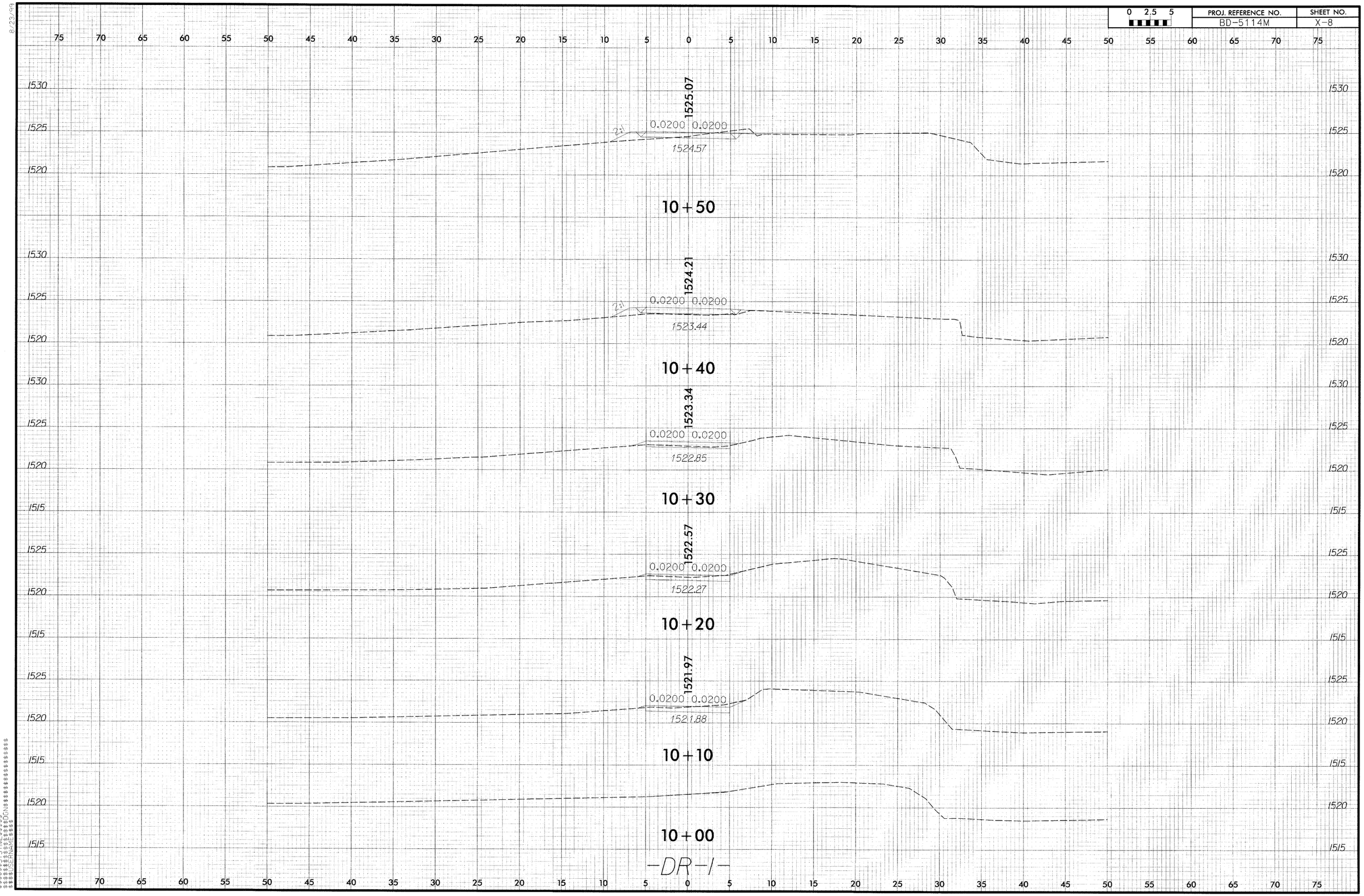

$$$$SYSTIME$$$$
$$$$DGN$$$$
$$$$USERNAME$$$$

PROJ. REFERENCE NO.	SHEET NO.
BD-5114M	X-9

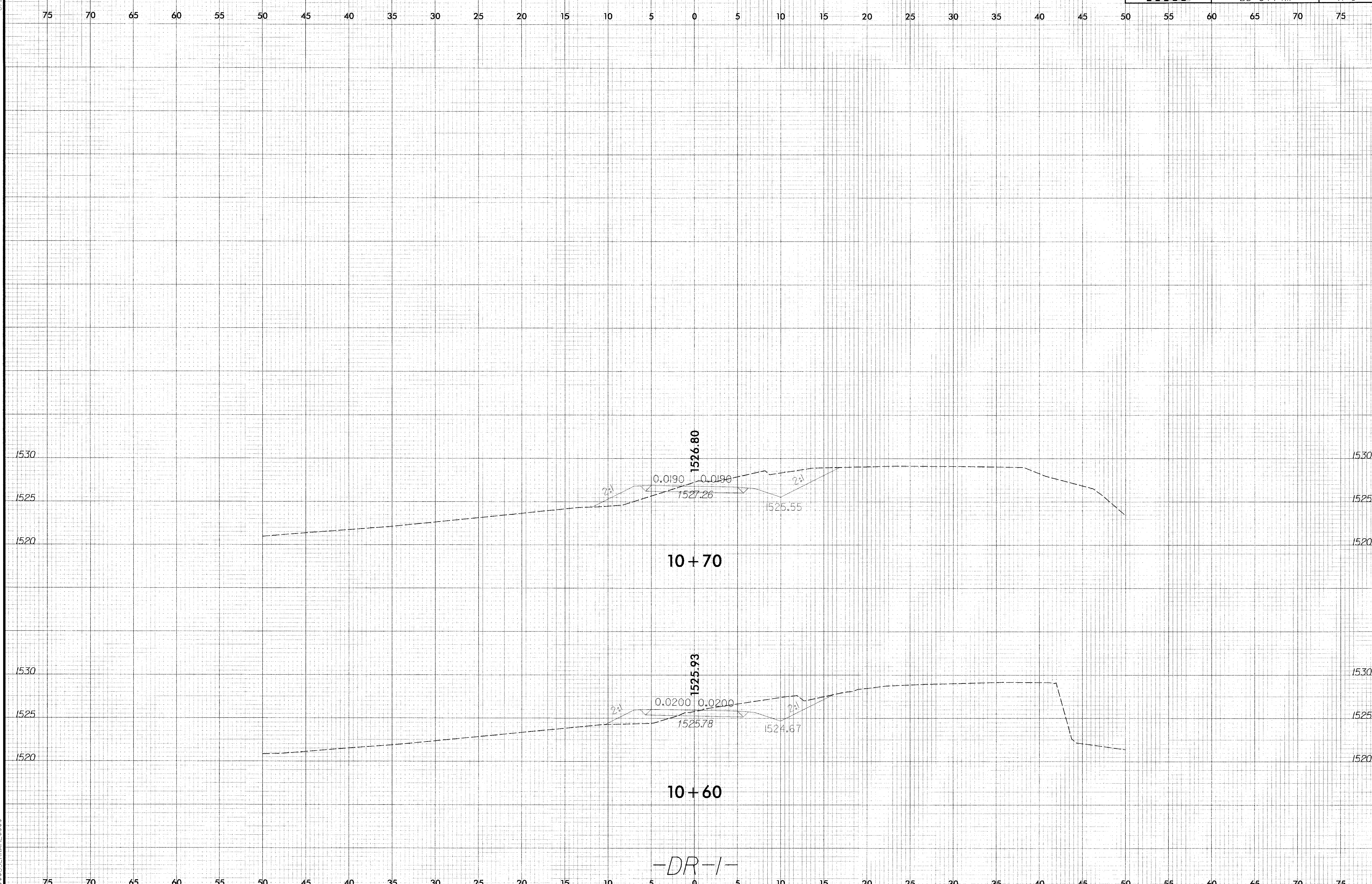

TIP PROJECT: BD-5114M

CONTRACT: DN00080

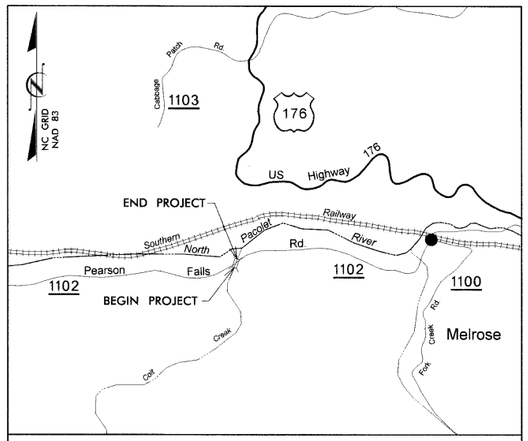

VICINITY MAP

STATE OF NORTH CAROLINA
DIVISION OF HIGHWAYS

POLK COUNTY

LOCATION: BRIDGE NO. 3 OVER COLT CREEK ON SR 1102 (PEARSON FALLS RD.)

TYPE OF WORK: GRADING, DRAINAGE, PAVING AND STRUCTURE

STATE	STATE PROJECT REFERENCE NO.	SHEET NO.	TOTAL SHEETS
N.C.	BD-5114M	1	

STATE PROJ. NO.	F.A. PROJ. NO.	DESCRIPTION
45360.1.13	BRZ-1102(9)	P.E.
45360.2.13	BRZ-1102(9)	R/W
45360.3.13	BRZ-1102(9)	CONST.

4

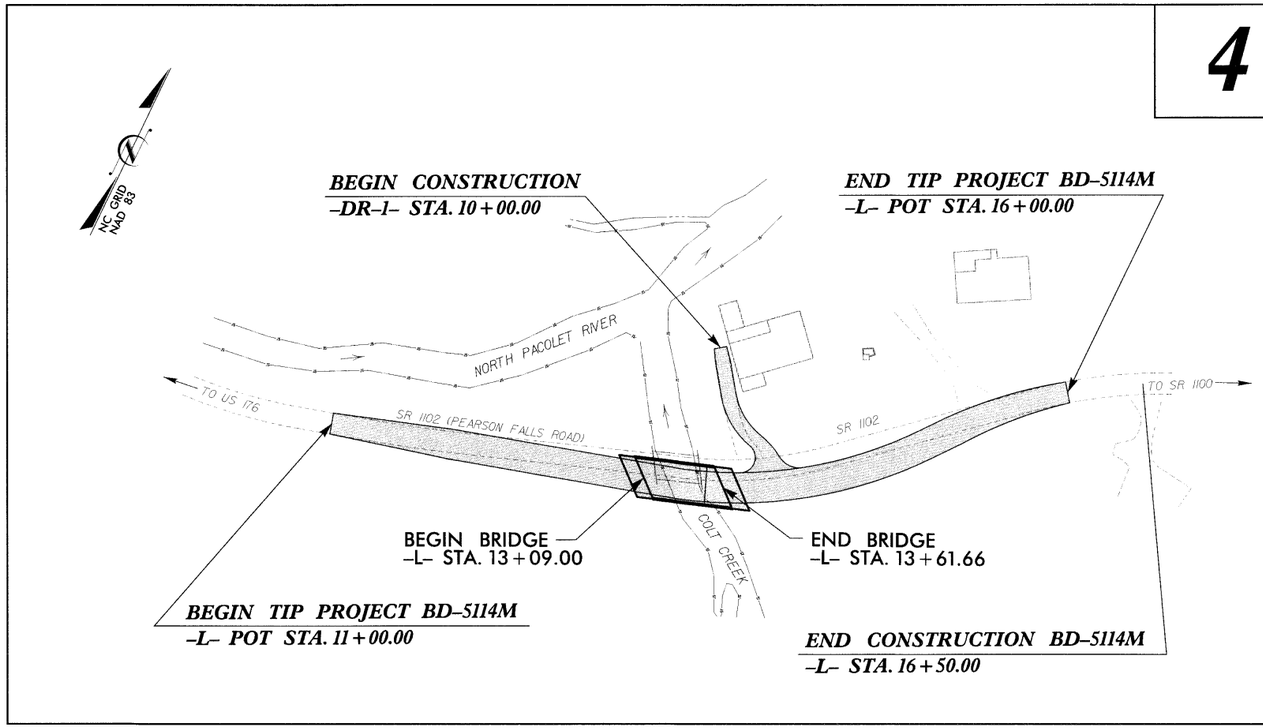

V&M
Vaughn & Melton
Consulting Engineers
Asheville, North Carolina 828-253-2796
Charlotte, North Carolina 704-357-0488
Tri-Cities, Tennessee 423-467-8401
Knoxville, Tennessee 865-546-5800
Middlesboro, Kentucky 606-248-6600
Spartanburg, South Carolina 864-574-4175

Copyright © 2006 Vaughn & Melton, Inc. All Rights Reserved

STRUCTURES

GRAPHIC SCALES

30 15 0 30 60
PLANS

30 15 0 30 60
PROFILE (HORIZONTAL)

6 3 0 6 12
PROFILE (VERTICAL)

DESIGN DATA

ADT 2008 = 250
ADT 2025 = 500

T = 6 %
V = 55 MPH

FUNC CLASS = RURAL LOCAL

PROJECT LENGTH

LENGTH ROADWAY TIP PROJECT BD-5114M = .085 MI.
LENGTH STRUCTURE TIP PROJECT BD-5114M = .010 MI.
TOTAL LENGTH OF TIP PROJECT BD-5114M = .095 MI.

Prepared in the Office of:
VAUGHN & MELTON
1318-F PATTON AVE.
ASHEVILLE NC, 28806
FOR THE NORTH CAROLINA DIVISION OF HIGHWAYS

2012 STANDARD SPECIFICATIONS

RIGHT OF WAY DATE:
OCTOBER 31, 2011

LETTING DATE:
AUGUST 28, 2012

HARDY WILLIS, PE
PROJECT ENGINEER

AARON CARVER, PE
PROJECT DESIGN ENGINEER

NCDOT CONTACT:
JOSH DEYTON, PE
PROJECT ENGINEER - ROADWAY DESIGN

STRUCTURAL ENGINEER

NORTH CAROLINA PROFESSIONAL SEAL 20777 ENGINEER HARDY L. WILLIS
7/2/12

SIGNATURE: P.E.

DIVISION OF HIGHWAYS STATE OF NORTH CAROLINA

STATE OF NORTH CAROLINA DEPARTMENT OF TRANSPORTATION

$$$$SYSTIME$$$$
$$$$USERNAME$$$$DGN$$$$

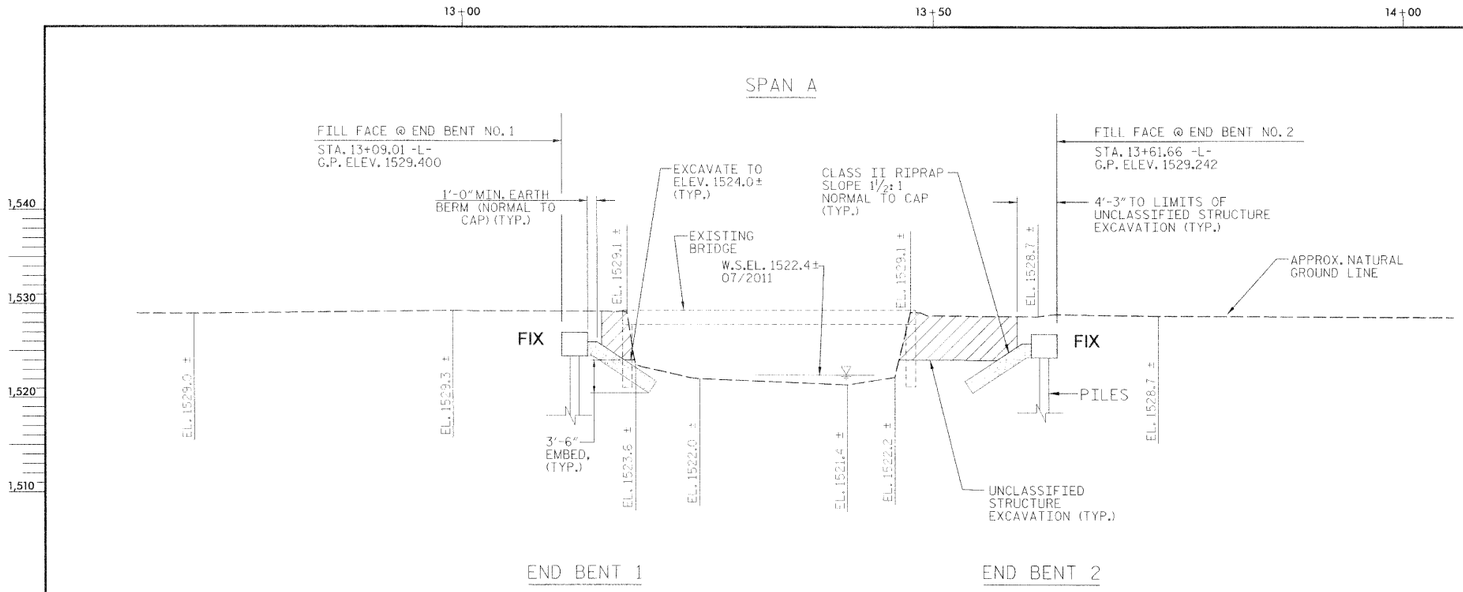

SECTION ALONG ℄ SURVEY -L-

SECTIONS AT END BENTS ARE AT RIGHT ANGLES.

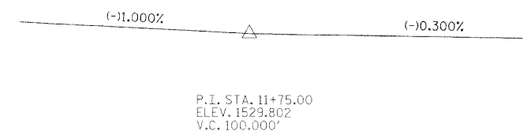

GRADE DATA -L-

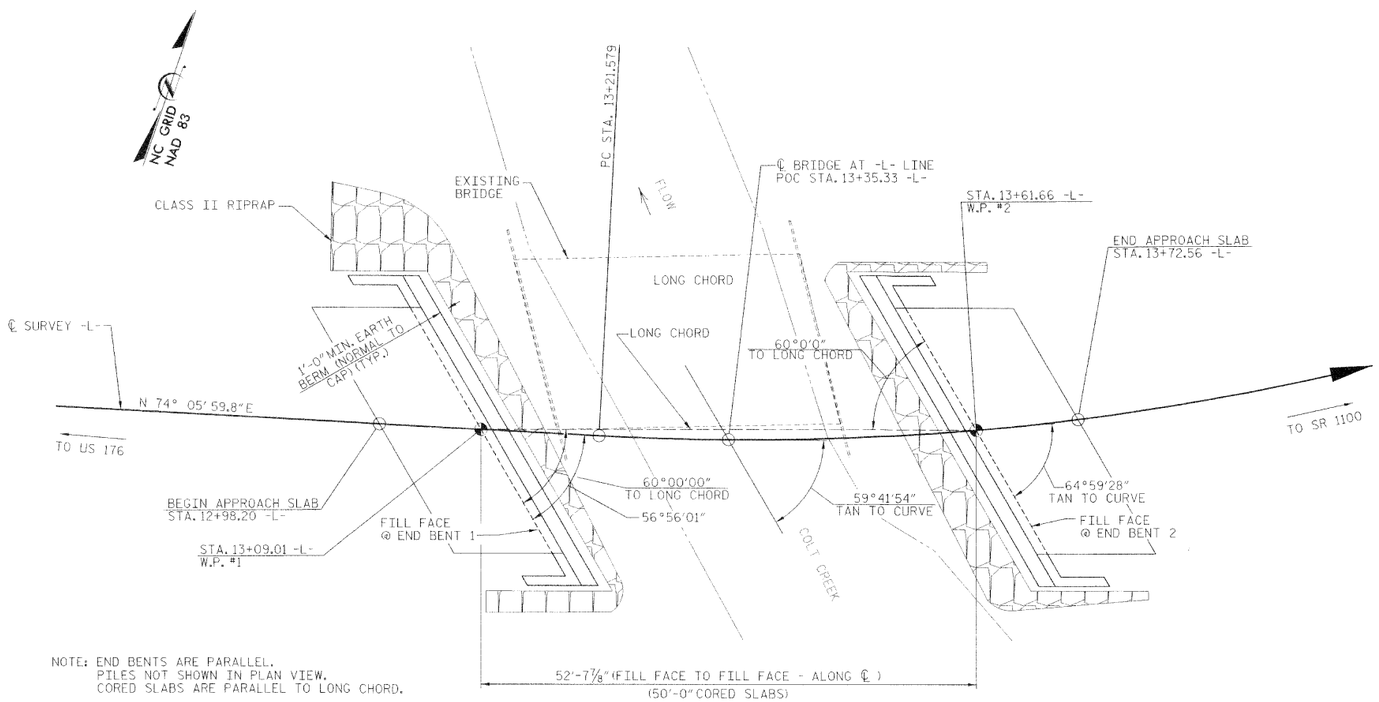

NOTE: END BENTS ARE PARALLEL.
PILES NOT SHOWN IN PLAN VIEW.
CORED SLABS ARE PARALLEL TO LONG CHORD.

PLAN ALONG ℄ SURVEY -L-

PI Sta 14+13.16
△ = 35° 37' 45.3" (LT)
D = 20° 06' 13.6"
L = 177.23'
T = 91.58'
R = 285.00'

HORIZONTAL CURVE DATA -L-

NORTH CAROLINA PROFESSIONAL SEAL 20477 ENGINEER HARDY L. WILLIS 5/3/12

PROJECT NO. BD-5114M

POLK COUNTY

STATION: 13+35.33 -L-

SHEET 1 OF 3 REPLACES BRIDGE NO. 3

STATE OF NORTH CAROLINA
DEPARTMENT OF TRANSPORTATION
RALEIGH

GENERAL DRAWING
FOR BRIDGE #3
on SR 1102 (PEARSON FALLS RD.)
over COLT CREEK
Between US 176 & SR 1100

APR. 2012

V&M Vaughn & Melton Consulting Engineers
Middlesboro, Kentucky 606-248-6606
Knoxville, Tennessee 865-546-9600
Asheville, North Carolina 828-253-3796
Copyright © 2006 Vaughn & Melton, Inc. All Rights Reserved

DRAWN BY: CBC DATE: APR. 2012
CHECKED BY: HLW DATE: APR. 2012

REVISIONS							SHEET NO.
NO.	BY:	DATE:	NO.	BY:	DATE:		S-1
1			3				TOTAL SHEETS
2			4				21

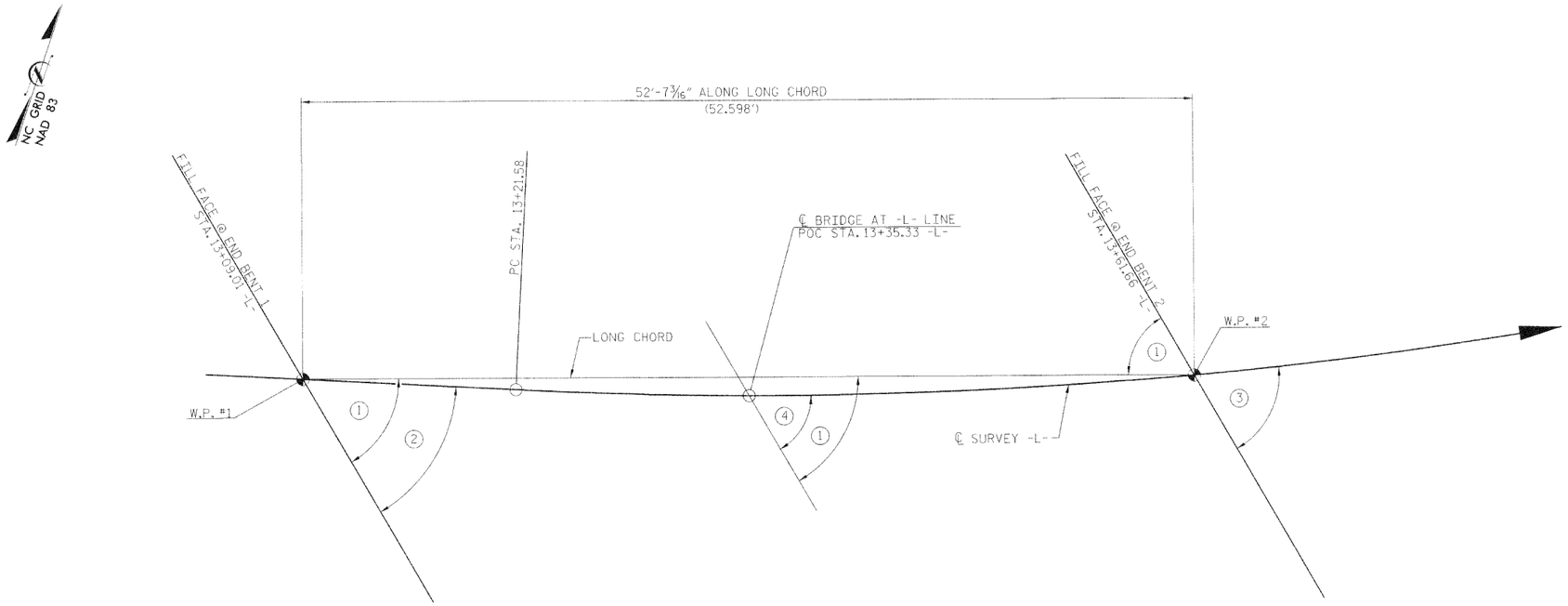

PI Sta 14+13.16
△ = 35° 37' 45.3" (LT)
D = 20° 06' 13.6"
L = 177.23'
T = 91.58'
R = 285.00'

HORIZONTAL CURVE DATA -L-

1. 60°00'00" TO LONG CHORD
2. 56°56'01" TO ℄ SURVEY -L-
3. 64°59'28" TAN TO CURVE, ℄ SURVEY -L-
4. 59°41'54" TAN TO CURVE, ℄ SURVEY -L-

LONG CHORD LAYOUT
END BENTS ARE PARALLEL.

PROJECT NO. BD-5114M
POLK COUNTY
STATION: 13+35.33 -L-
SHEET 2 OF 3

NORTH CAROLINA PROFESSIONAL SEAL 20777 ENGINEER HARDY L. WILLIS
5/3/12

V&M Vaughn & Melton Consulting Engineers
Middlesboro, Kentucky 606-248-6600
Knoxville, Tennessee 865-546-9900
Asheville, North Carolina 828-253-2796
Copyright © 2006 Vaughn & Melton, Inc. All Rights Reserved

STATE OF NORTH CAROLINA
DEPARTMENT OF TRANSPORTATION
RALEIGH

GENERAL DRAWING
FOR BRIDGE #3
on SR 1102 (PEARSON FALLS RD.)
over COLT CREEK
Between US 176 & SR 1100

APR. 2012

DRAWN BY: CBC DATE: APR. 2012
CHECKED BY: HLW DATE: APR. 2012

REVISIONS						
NO.	BY:	DATE:	NO.	BY:	DATE:	
1			3			
2			4			

SHEET NO. S-2
TOTAL SHEETS 21

BM BL-2 - N 551200.334 E 1004677.002, -L- STA 10+89.25, ELEV. 1528.69', 1.41 FT. LT

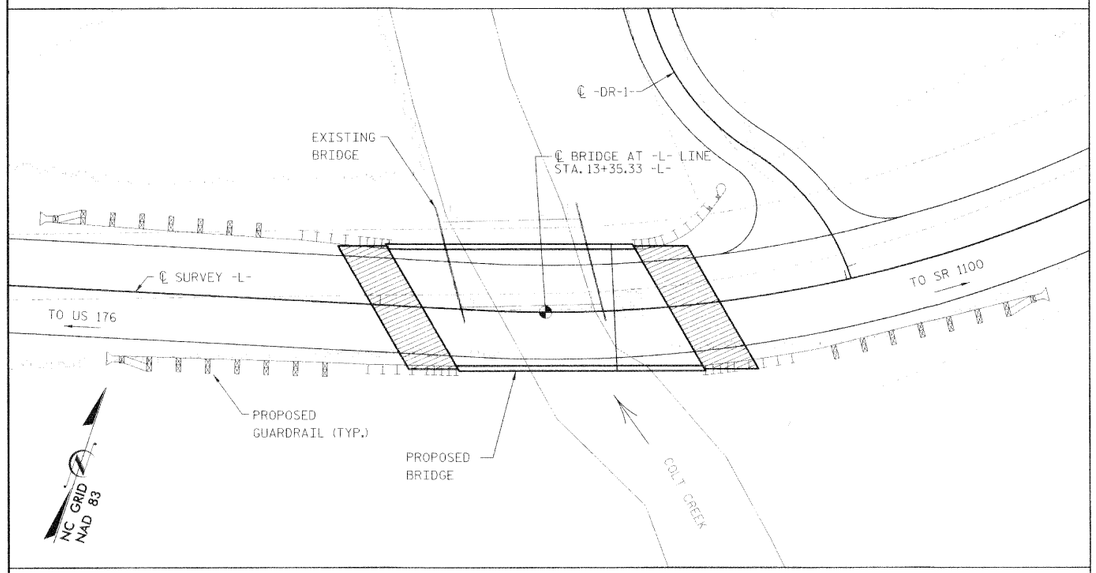

LOCATION SKETCH

GENERAL NOTES:

ASSUMED LIVE LOAD = HL-93 OR ALTERNATE LOADING.

THIS BRIDGE HAS BEEN DESIGNED IN ACCORDANCE WITH THE REQUIREMENTS OF THE AASHTO LRFD BRIDGE DESIGN SPECIFICATIONS. THIS BRIDGE IS LOCATED IN SEISMIC PERFORMANCE ZONE 1. NO DETAILED SEISMIC DESIGN IS REQUIRED.

FOR OTHER DESIGN DATA AND GENERAL NOTES, SEE "STANDARD NOTES" SHEET

FOR EROSION CONTROL MEASURES, SEE EROSION CONTROL PLANS.

REMOVAL OF THE EXISTING BRIDGE SHALL BE PERFORMED SO AS NOT TO ALLOW DEBRIS TO FALL INTO THE WATER. THE CONTRACTOR SHALL REMOVE THE BRIDGE AND SUBMIT PLANS FOR DEMOLITION IN ACCORDANCE WITH ARTICLE 402-2 OF THE STANDARD SPECIFICATIONS.

THE SUBSTRUCTURE OF THE EXISTING BRIDGE INDICATED ON THE PLANS IS FROM THE BEST INFORMATION AVAILABLE. SINCE THIS INFORMATION IS SHOWN FOR THE CONVENIENCE OF THE CONTRACTOR, THE CONTRACTOR SHALL HAVE NO CLAIM WHATSOEVER AGAINST THE DEPARTMENT OF TRANSPORTATION FOR ANY DELAYS OR ADDITIONAL COST INCURRED BASED ON DIFFERENCES BETWEEN THE EXISTING BRIDGE SUBSTRUCTURE SHOWN ON THE PLANS AND THE ACTUAL CONDITIONS AT THE PROJECT SITE.

THIS STRUCTURE HAS BEEN DESIGNED IN ACCORDANCE WITH HEC 18, "EVALUATING SCOUR AT BRIDGES", MAY 2001.

FOR SUBMITTAL OF WORKING DRAWINGS, SEE SPECIAL PROVISIONS.

FOR FALSEWORK AND FORMWORK, SEE SPECIAL PROVISIONS.

FOR CRANE SAFETY, SEE SPECIAL PROVISIONS.

FOR GROUT FOR STRUCTURES, SEE SPECIAL PROVISIONS.

FOR PILES, SEE SECTION 450 OF THE STANDARD SPECIFICATIONS.

PILES AT END BENT NO. 1 ARE DESIGNED FOR A FACTORED RESISTANCE OF 80 TONS PER PILE.

DRIVE PILES AT END BENT NO. 1 TO A REQUIRED DRIVING RESISTANCE OF 133 TONS PER PILE.

PILES AT END BENT NO. 2 ARE DESIGNED FOR A FACTORED RESISTANCE OF 80 TONS PER PILE.

DRIVE PILES AT END BENT NO. 2 TO A REQUIRED DRIVING RESISTANCE OF 133 TONS PER PILE.

PILE EXCAVATION MAY BE REQUIRED TO INSTALL PILES AT END BENT NO. 1. EXCAVATE HOLES AT PILE LOCATIONS TO ELEVATION 1521.6 FT. FOR PILE EXCAVATION, SEE SECTION 450 OF THE STANDARD SPECIFICATIONS.

PILE EXCAVATION MAY BE REQUIRED TO INSTALL PILES AT END BENT NO. 2. EXCAVATE HOLES AT PILE LOCATIONS TO ELEVATION 1517.0 FT. FOR PILE EXCAVATION, SEE SECTION 450 OF THE STANDARD SPECIFICATIONS.

HYDROGRAPHIC DATA

DESIGN DISCHARGE	= 728	CFS
DESIGN FREQUENCY	= 25	YRS
DESIGN HW ELEVATION	= 1527.44	FT
BASE DISCHARGE	= 1040	CFS
BASE FREQUENCY	= 100	YRS
BASE HW ELEVATION	= 1528.91	FT

OVERTOPPING FLOOD DATA

OVERTOPPING DISCHARGE	= 1070	CFS
OVERTOPPING FREQUENCY	= 100+	YRS
OVERTOPPING ELEVATION	= 1528.91	FT

TOTAL BILL OF MATERIAL

	REMOVAL OF EXISTING STRUCTURE AT STA. 13+35.33 -L-	UNCLASSIFIED STRUCTURE EXCAVATION AT STA. 13+35.33 -L-	CLASS A CONCRETE	BRIDGE APPROACH SLABS	REINFORCING STEEL	HP 12 X 53 STEEL PILES		PILE EXCAVATION IN SOIL	3'-0" x 1'-9" PRESTRESSED CONCRETE CORED SLAB UNIT		VERTICAL CONCRETE BARRIER RAIL	ELASTOMERIC BEARINGS	RIPRAP CLASS II (2'-0" THICK)	FILTER FABRIC FOR DRAINAGE
	LUMP SUM	LUMP SUM	CU. YARDS	LUMP SUM	LBS.	NO.	LIN. FT.		NO.	LIN. FT.	LIN. FT.	LUMP SUM	TONS	SQ. YARDS
SUPERSTRUCTURE									9	450.0	100.29	LUMP SUM		
END BENT 1			13.8		2,075	5	205	15					85	95
END BENT 2			13.8		2,075	5	165	40					80	91
TOTAL	LUMP SUM	LUMP SUM	27.6	LUMP SUM	4,150	10	370	55	9	450.0	100.29	LUMP SUM	165	186

NORTH CAROLINA PROFESSIONAL SEAL 20777 ENGINEER HARDY L. WILLIS

5/3/12

PROJECT NO. BD-5114M

POLK COUNTY

STATION: 13+35.33 -L-

SHEET 3 OF 3

STATE OF NORTH CAROLINA
DEPARTMENT OF TRANSPORTATION
RALEIGH

GENERAL DRAWING
FOR BRIDGE #3
on SR 1102 (PEARSON FALLS RD.)
over COLT CREEK
Between US 176 & SR 1100

APR. 2012

Vaughn & Melton Consulting Engineers
Middlesboro, Kentucky 606-248-8470
Knoxville, Tennessee 865-546-1800
Asheville, North Carolina 828-251-0796

Copyright © 2006 Vaughn & Melton, Inc. All Rights Reserved

DRAWN BY: CBC DATE: APR. 2012
CHECKED BY: BLW DATE: APR. 2012

REVISIONS						SHEET NO.
NO.	BY:	DATE:	NO.	BY:	DATE:	S-3
1			3			TOTAL SHEETS
2			4			21

NOTES

FOR TEMPORARY GUARDRAIL DETAILS AND PAY ITEM, SEE ROADWAY PLANS.

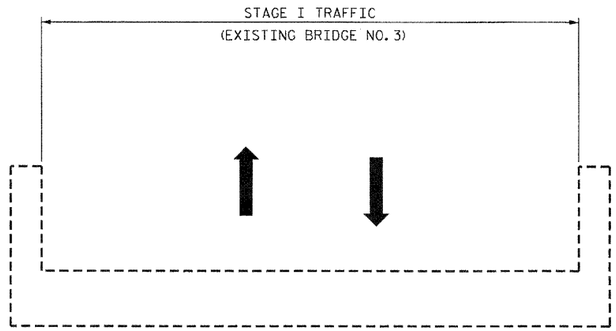

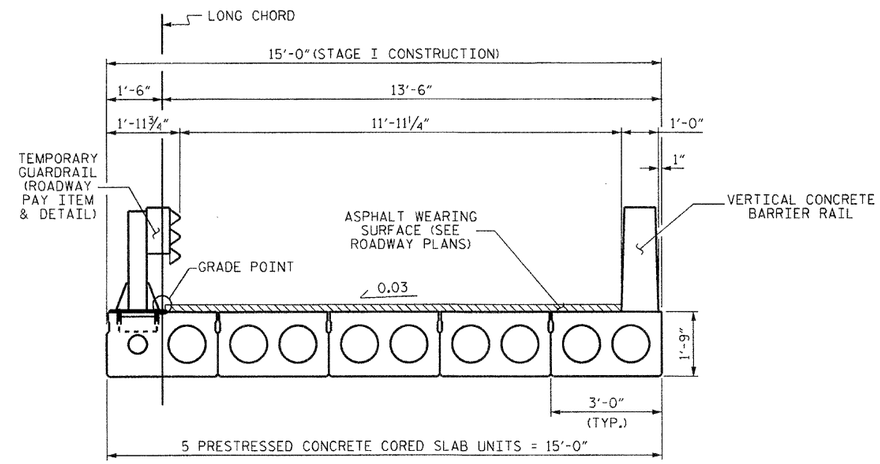

STAGE I

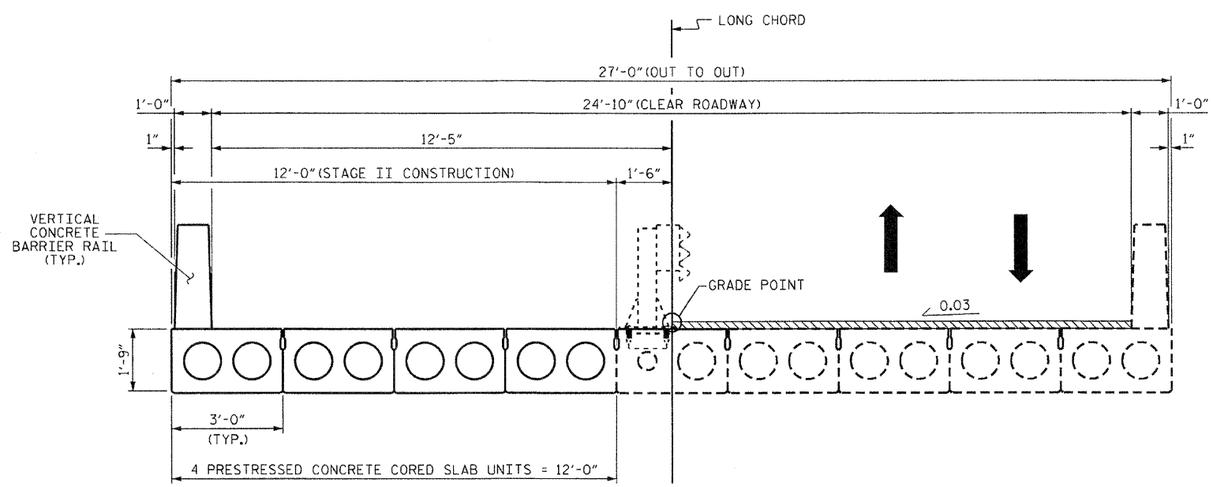

STAGE II

STAGING SEQUENCE

PROJECT NO. BD-5114M
POLK COUNTY
STATION: 13+35.33 -L-

STATE OF NORTH CAROLINA
DEPARTMENT OF TRANSPORTATION
RALEIGH

CONSTRUCTION STAGING

NORTH CAROLINA PROFESSIONAL SEAL 15779 ENGINEER JOHN R. DUGGINS, JR.
John R. Duggins Jr.
3/14/12

REVISIONS								SHEET NO.
NO.	BY:	DATE:	NO.	BY:	DATE:			S-4
1			3					TOTAL SHEETS
2			4					21

DRAWN BY : A. SORSENGINH DATE : 11/9/11
CHECKED BY : B. MATHEW DATE : 1/2012

14-MAR-2012 11:22
S:\DPG4\John\LIBR_Files\BD-5114M\Final_Plans\BD-5114M_SD_PC.dgn
jdugginS

LOAD AND RESISTANCE FACTOR RATING (LRFD) SUMMARY FOR PRESTRESSED CONCRETE GIRDERS

LEVEL		VEHICLE	WEIGHT (W) (TONS)	CONTROLLING LOAD RATING	MINIMUM RATING FACTORS (RF)	TONS = W X RF	STRENGTH I LIMIT STATE											SERVICE III LIMIT STATE						COMMENT NUMBER
								MOMENT					SHEAR						MOMENT					
							LIVELOAD FACTORS	DISTRIBUTION FACTORS (DF)	RATING FACTOR	SPAN	GIRDER LOCATION	DISTANCE FROM LEFT END OF SPAN (ft)	DISTRIBUTION FACTORS (DF)	RATING FACTOR	SPAN	GIRDER LOCATION	DISTANCE FROM LEFT END OF SPAN (ft)	LIVELOAD FACTORS	DISTRIBUTION FACTORS (DF)	RATING FACTOR	SPAN	GIRDER LOCATION	DISTANCE FROM LEFT END OF SPAN (ft)	
DESIGN LOAD RATING		HL-93(Inv)	N/A	(1)	1.35	--	1.75	0.25	1.74	50'	EL	24.423	0.656	**1.35**	50'	EL	**9.769**	0.80	0.25	1.59	50'	EL	24.423	
		HL-93(Opr)	N/A	--	1.75	--	1.35	0.25	2.25	50'	EL	24.423	0.656	1.75	50'	EL	9.769	N/A	--	--	--	--	--	
		HS-20(Inv)	36.000	(2)	1.586	57.108	1.75	0.25	2.15	50'	EL	24.423	0.656	**1.59**	50'	EL	**9.769**	0.80	0.25	1.97	50'	EL	24.423	
		HS-20(Opr)	36.000	--	2.056	74.028	1.35	0.25	2.79	50'	EL	24.423	0.656	2.06	50'	EL	9.769	N/A	--	--	--	--	--	
LEGAL LOAD RATING	SV	SNSH	13.500	--	4.009	54.117	1.4	0.25	5.47	50'	EL	24.423	0.656	4.31	50'	EL	9.769	0.80	0.25	4.01	50'	EL	24.423	
		SNGARBS2	20.000	--	3.168	63.352	1.4	0.25	4.32	50'	EL	24.423	0.656	3.19	50'	EL	9.769	0.80	0.25	3.17	50'	EL	24.423	
		SNAGRIS2	22.000	--	3.009	66.192	1.4	0.25	4.18	50'	EL	19.538	0.656	3.01	50'	EL	9.769	0.80	0.25	3.07	50'	EL	24.423	
		SNCOTTS3	27.250	--	2	54.493	1.4	0.25	2.73	50'	EL	24.423	0.656	2.16	50'	EL	9.769	0.80	0.25	2.00	50'	EL	24.423	
		SNAGGRS4	34.925	--	1.739	60.742	1.4	0.25	2.37	50'	EL	24.423	0.656	1.88	50'	EL	9.769	0.80	0.25	1.74	50'	EL	24.423	
		SNS5A	35.550	--	1.696	60.292	1.4	0.25	2.31	50'	EL	24.423	0.656	1.96	50'	EL	9.769	0.80	0.25	1.70	50'	EL	24.423	
		SNS6A	39.950	--	1.586	63.364	1.4	0.25	2.16	50'	EL	24.423	0.656	1.82	50'	EL	9.769	0.80	0.25	1.59	50'	EL	24.423	
		SNS7B	42.000	--	1.512	63.487	1.4	0.25	2.06	50'	EL	24.423	0.656	1.85	50'	EL	9.769	0.80	0.25	1.51	50'	EL	24.423	
	TTST	TNAGRIT3	33.000	--	1.943	64.127	1.4	0.25	2.65	50'	EL	24.423	0.656	2.14	50'	EL	9.769	0.80	0.25	1.94	50'	EL	24.423	
		TNT4A	33.075	--	1.96	64.837	1.4	0.25	2.67	50'	EL	24.423	0.656	2.04	50'	EL	9.769	0.80	0.25	1.96	50'	EL	24.423	
		TNT6A	41.600	--	1.633	67.938	1.4	0.25	2.23	50'	EL	24.423	0.656	2	50'	EL	9.769	0.80	0.25	1.63	50'	EL	24.423	
		TNT7A	42.000	--	1.658	69.634	1.4	0.25	2.26	50'	EL	24.423	0.656	1.86	50'	EL	9.769	0.80	0.25	1.66	50'	EL	24.423	
		TNT7B	42.000	--	1.728	72.595	1.4	0.25	2.36	50'	EL	24.423	0.656	1.76	50'	EL	9.769	0.80	0.25	1.73	50'	EL	24.423	
		TNAGRIT4	43.000	--	1.64	70.537	1.4	0.25	2.24	50'	EL	24.423	0.656	1.69	50'	EL	9.769	0.80	0.25	1.64	50'	EL	24.423	
		TNAGT5A	45.000	--	1.532	68.95	1.4	0.25	2.09	50'	EL	24.423	0.656	1.75	50'	EL	9.769	0.80	0.25	1.53	50'	EL	24.423	
		TNAGT5B	45.000	(3)	1.501	67.548	1.4	0.25	2.05	50'	EL	24.423	0.656	1.6	50'	EL	9.769	0.80	0.25	**1.50**	50'	EL	**24.423**	

LOAD FACTORS:

DESIGN LOAD RATING FACTORS	LIMIT STATE	γ_{DC}	γ_{DW}
	STRENGTH I	1.25	1.50
	SERVICE III	1.00	1.00

NOTES:

MINIMUM RATING FACTORS ARE BASED ON THE STRENGTH I AND SERVICE III LIMIT STATES.

ALLOWABLE STRESSES FOR SERVICE III LIMIT STATE ARE AS REQUIRED FOR DESIGN.

COMMENTS:

1.
2.
3.
4.

(#) CONTROLLING LOAD RATING
(1) DESIGN LOAD RATING (HL-93)
(2) DESIGN LOAD RATING (HS-20)
(3) LEGAL LOAD RATING **
** SEE CHART FOR VEHICLE TYPE

GIRDER LOCATION
I - INTERIOR GIRDER
EL - EXTERIOR LEFT GIRDER
ER - EXTERIOR RIGHT GIRDER

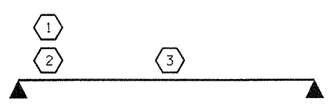

LRFR SUMMARY

FOR SPAN A

PROJECT NO. BD-5114M

POLK COUNTY

STATION: 13+35.33 -L-

STATE OF NORTH CAROLINA
DEPARTMENT OF TRANSPORTATION
RALEIGH

STANDARD
LRFR SUMMARY FOR
50' CORED SLAB UNIT
60° SKEW & 120° SKEW
(NON-INTERSTATE TRAFFIC)

NORTH CAROLINA PROFESSIONAL SEAL 15779 ENGINEER JOHN R. DUGGINS, JR.
3/14/12

REVISIONS						SHEET NO.
NO.	BY:	DATE:	NO.	BY:	DATE:	S-5
1			3			TOTAL SHEETS
2			4			21

ASSEMBLED BY :	A. SORSENGINH	DATE :	11/2011
CHECKED BY :	B. MATHEW	DATE :	1/2012
DRAWN BY : CVC	6/10		
CHECKED BY : DNS	6/10		

14-MAR-2012 11:22
S:\DPG4\John\LIBR_Files\BD-5114M\Final_Plans\BD-5114M_SD_LRFR.dgn
jduggins

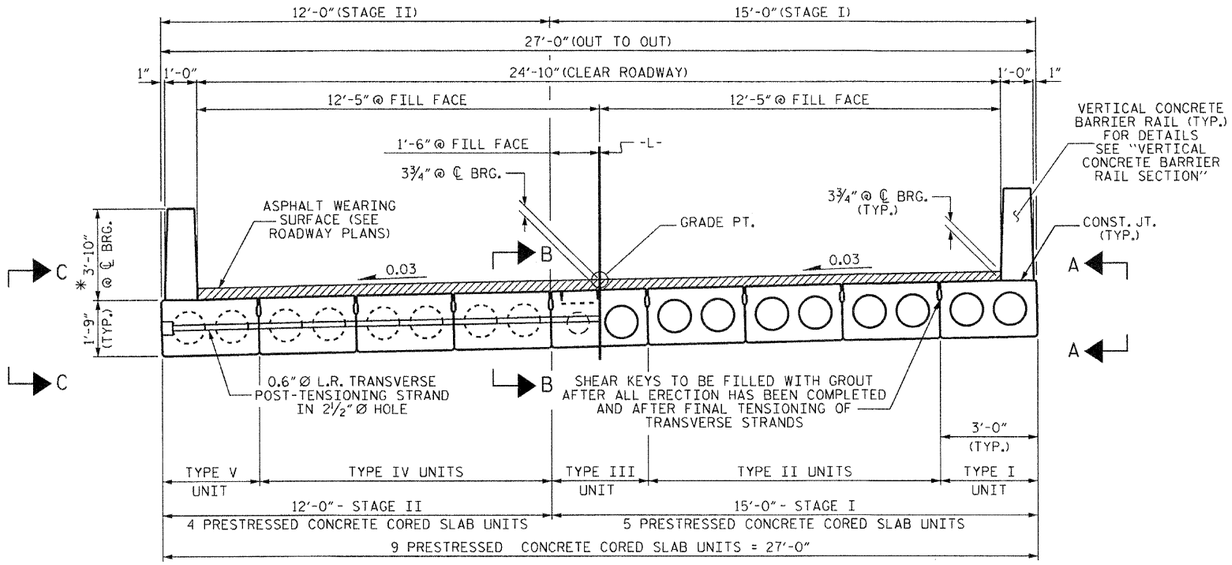

HALF SECTION AT INTERMEDIATE DIAPHRAGM

HALF SECTION AT VOIDS

TYPICAL SECTION

* - THE MAXIMUM BARRIER RAIL HEIGHT AND ASPHALT THICKNESS IS SHOWN. THE HEIGHT OF THE BARRIER RAIL AND ASPHALT THICKNESS VARIES WHILE THE TOP OF THE BARRIER RAIL FOLLOWS THE PROFILE OF THE GUTTERLINE. FOR RAIL HEIGHT DETAILS AND ASPHALT THICKNESS SEE THE "VERTICAL CONCRETE BARRIER RAIL SECTION" DETAIL.

FIXED END

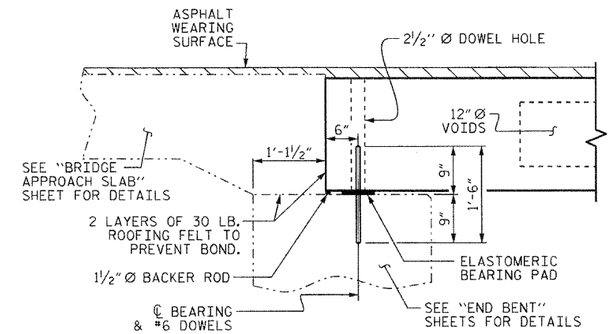

SECTION AT END BENT

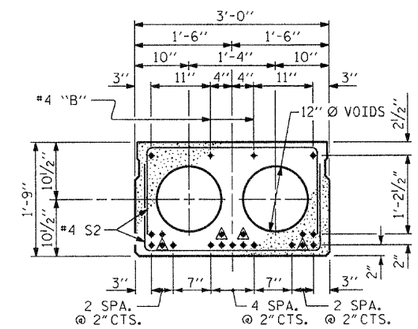

INTERIOR SLAB SECTION
(50' UNIT)
TYPE II & IV (19 STRANDS REQUIRED)

0.6" Ø LOW RELAXATION STRAND LAYOUT

▲ BOND SHALL BE BROKEN ON THESE STRANDS FOR A DISTANCE OF 6'-0" FROM END OF CORED SLAB UNIT. SEE STANDARD SPECIFICATIONS, ARTICLE 1078-7.

DEBONDING LEGEND

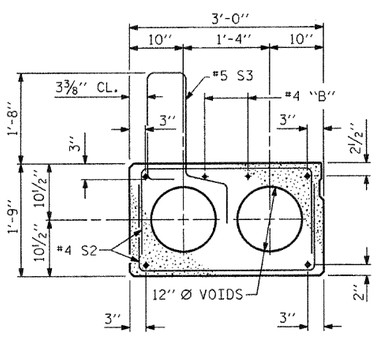

EXTERIOR SLAB SECTION

TYPE I & V
(FOR PRESTRESSED STRAND LAYOUT, SEE INTERIOR SLAB SECTION - TYPE II & IV)

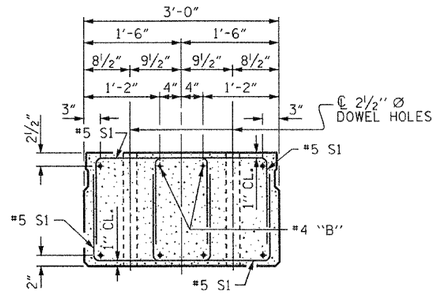

END ELEVATION

SHOWING PLACEMENT OF DOUBLE STIRRUPS AND LOCATION OF DOWEL HOLES. (STRAND LAYOUT NOT SHOWN.) INTERIOR SLAB UNIT SHOWN-EXTERIOR SLAB UNIT SIMILAR EXCEPT SHEAR KEY LOCATION.

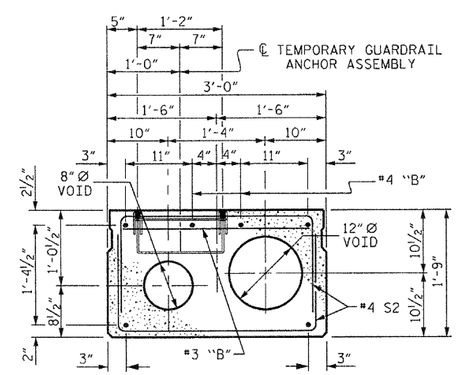

INTERIOR SLAB SECTION

TYPE III
(FOR PRESTRESSED STRAND LAYOUT, SEE "INTERIOR SLAB SECTION - TYPE II & IV")

FOR TEMPORARY GUARDRAIL ANCHOR ASSEMBLY LOCATION, SEE SECTION OF ANCHOR ASSEMBLY LOCATION ON "ANCHORAGE DETAILS FOR TEMPORARY GUARDRAIL ANCHOR ASSEMBLY FOR TYPE III CORED SLAB UNIT" SHEET.

PROJECT NO. BD-5114M
POLK COUNTY
STATION: 13+35.33 -L-

SHEET 1 OF 5

STATE OF NORTH CAROLINA
DEPARTMENT OF TRANSPORTATION
RALEIGH

3'-0" X 1'-9"
PRESTRESSED CONCRETE
CORED SLAB UNIT

NORTH CAROLINA PROFESSIONAL SEAL 15779 ENGINEER JOHN R. DUGGINS, JR.
3/14/12

REVISIONS								SHEET NO.
NO.	BY:	DATE:	NO.	BY:	DATE:			S-6
1			3					TOTAL SHEETS
2			4					21

ASSEMBLED BY :	A. SORSENGINH	DATE :	11/2011
CHECKED BY :	B. MATHEW	DATE :	1/2012
DRAWN BY :	DGE	6/09	
CHECKED BY:	BCH	6/09	

14-MAR-2012 11:20
S:\DPG4\John\LIBR_Files\BD-5114M\Final_Plans\BD-5114M_SD_S*.dgn
jduggins

▲ STRAND #1 GOES THRU 5 CORED SLAB UNITS (TO BE TENSIONED DURING STAGE I CONSTRUCTION)

● STRAND #2 GOES THRU ALL 9 CORED SLAB UNITS (TO BE TENSIONED DURING STAGE II CONSTRUCTION)

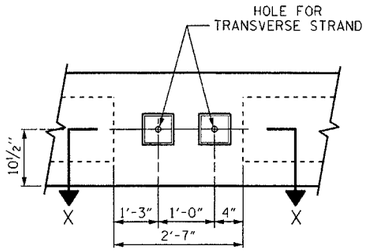

VIEW A-A
SEE SHEET 1 OF 5

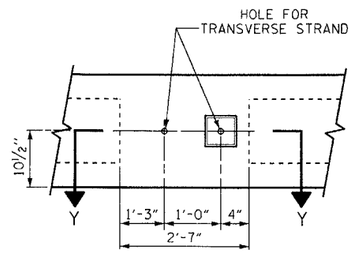

VIEW B-B
SEE SHEET 1 OF 5

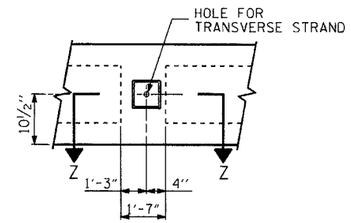

VIEW C-C
SEE SHEET 1 OF 5

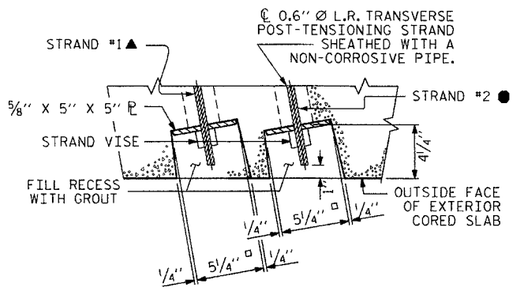

SECTION X-X
(TYPE I UNIT)

UP STATION

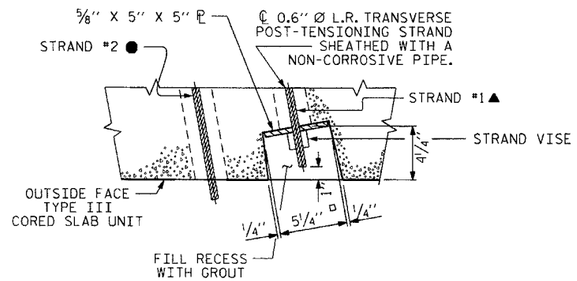

SECTION Y-Y
(TYPE III UNIT)

UP STATION

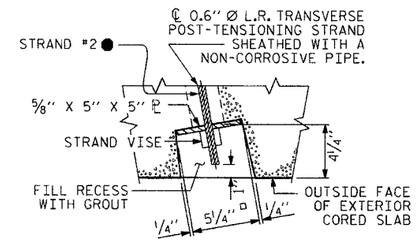

SECTION Z-Z
(TYPE V UNIT)

UP STATION

GROUTED RECESS AT END OF POST-TENSIONED STRAND

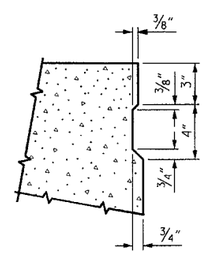

SHEAR KEY DETAIL
NOTE: OMIT SHEAR KEY ON OUTSIDE FACE OF EXTERIOR CORED SLABS.

PROJECT NO. BD-5114M
POLK COUNTY
STATION: 13+35.33 -L-

SHEET 2 OF 5

STATE OF NORTH CAROLINA
DEPARTMENT OF TRANSPORTATION
RALEIGH

SUPERSTRUCTURE
3'-0" X 1'-9"
PRESTRESSED CONCRETE
CORED SLAB UNIT

NORTH CAROLINA PROFESSIONAL SEAL 15779 ENGINEER JOHN R. DUGGINS, JR.
3/14/12

REVISIONS						SHEET NO.
NO.	BY:	DATE:	NO.	BY:	DATE:	S-7
1			3			TOTAL SHEETS
2			4			21

DRAWN BY :	A. SORSENGINH	DATE :	11/1/11
CHECKED BY :	B. MATHEW	DATE :	01/12

14-MAR-2012 13:03
S:\DPG4\John\LIBR_Files\BD-5114M\Final_Plans\BD-5114M_SD_S*.dgn
jduggins

NCDOS

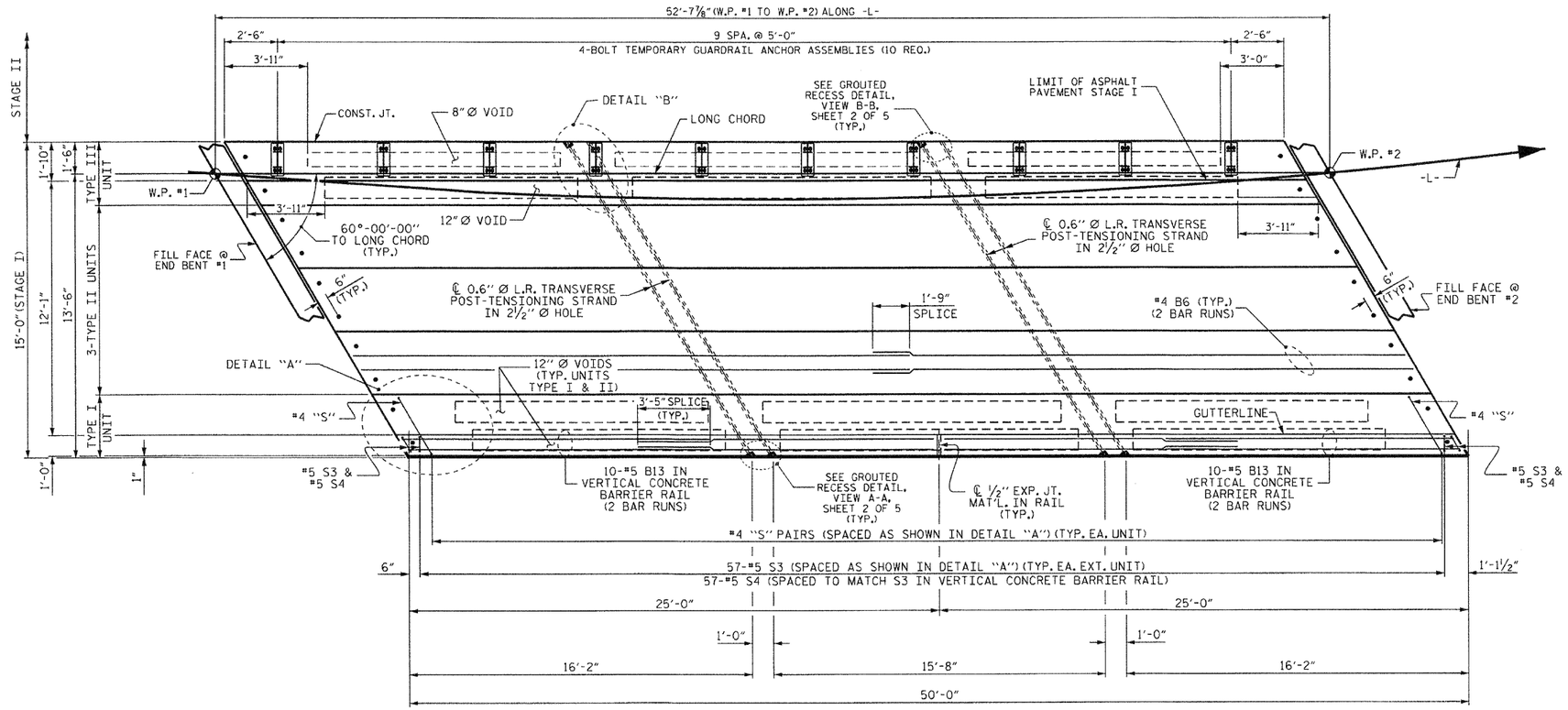

PLAN OF UNIT

(STAGE I)

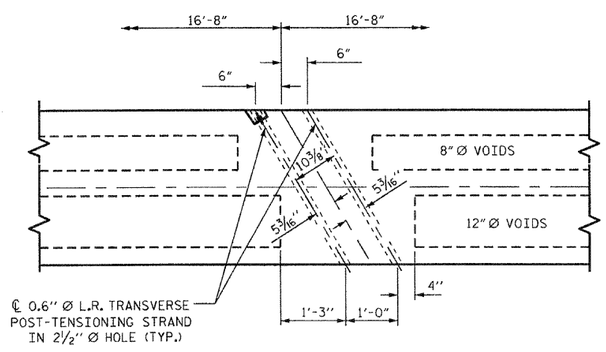

DETAIL "B"

#4 S2 BARS MAY BE SHIFTED AS NECESSARY TO MAINTAIN 1" CLEAR TO GROUTED RECESS AND 2½" Ø TRANSVERSE POST-TENSIONING STRAND HOLES.

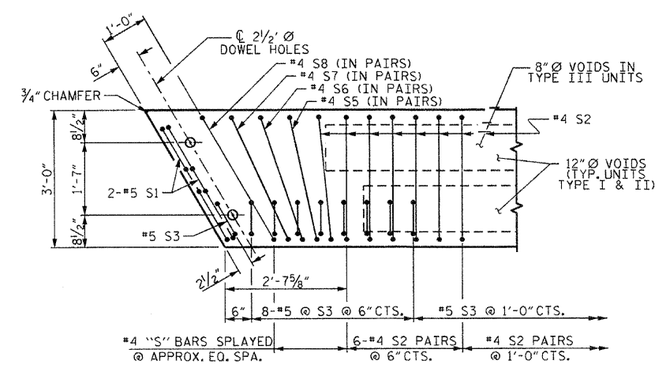

DETAIL "A"

NOTE: EXTERIOR SECTION SHOWN-INTERIOR SECTION SIMILAR EXCEPT OMIT S3 BARS

PROJECT NO. BD-5114M

POLK COUNTY

STATION: 13+35.33 -L-

SHEET 3 OF 5

STATE OF NORTH CAROLINA
DEPARTMENT OF TRANSPORTATION
RALEIGH

SUPERSTRUCTURE
PLAN OF 50' UNIT
STAGE I

NORTH CAROLINA PROFESSIONAL SEAL 15779 ENGINEER JOHN R. DUGGINS, JR.
3/14/12

REVISIONS						SHEET NO.
NO.	BY:	DATE:	NO.	BY:	DATE:	S-8
1			3			TOTAL SHEETS
2			4			21

ASSEMBLED BY :	A. SORSENGINH	DATE :	11/2/11
CHECKED BY :	B. MATHEW	DATE :	01/2/12
DRAWN BY :	DGE 5/09		
CHECKED BY :	BCH 6/09		

14-MAR-2012 13:04
S:\DPG4\John\LIBR_Files\BD-5114M\Final_Plans\BD-5114M_SD_S*.dgn
jduggins

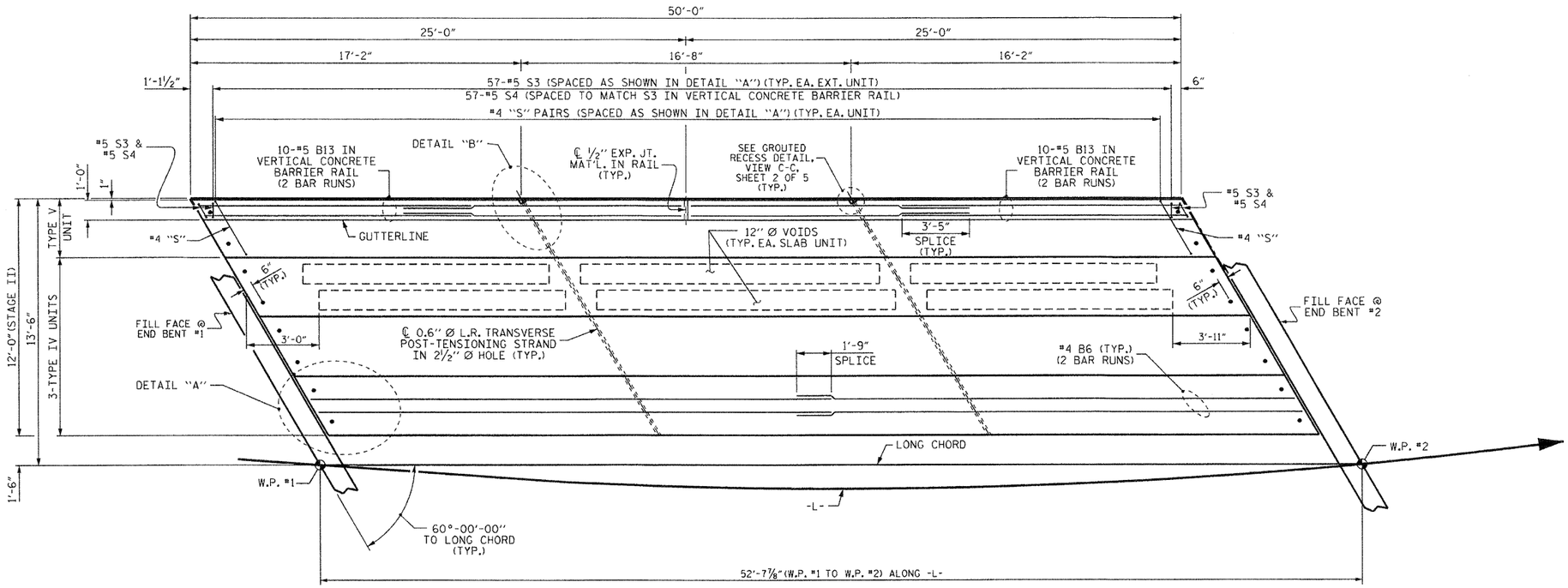

PLAN OF UNIT
(STAGE I)

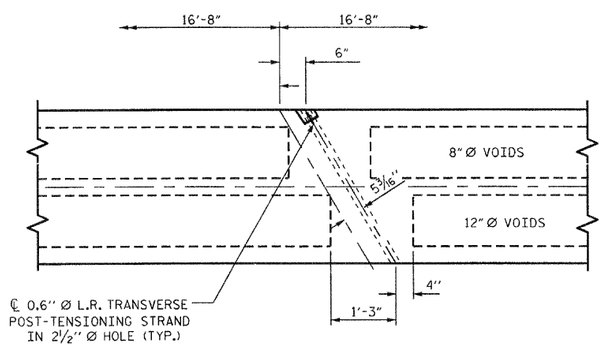

DETAIL "B"
#4 S2 BARS MAY BE SHIFTED AS NECESSARY TO MAINTAIN 1" CLEAR TO GROUTED RECESS AND 2½" Ø TRANSVERSE POST-TENSIONING STRAND HOLES.

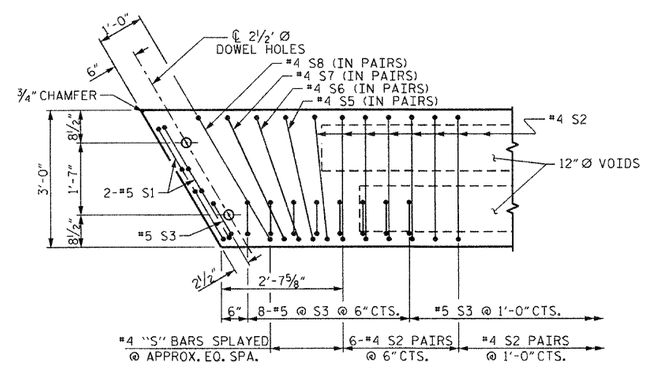

DETAIL "A"
NOTE: EXTERIOR SECTION SHOWN-INTERIOR SECTION SIMILAR EXCEPT OMIT S3 BARS

PROJECT NO. BD-5114M
POLK COUNTY
STATION: 13+35.33 -L-

SHEET 4 OF 5

STATE OF NORTH CAROLINA
DEPARTMENT OF TRANSPORTATION
RALEIGH

SUPERSTRUCTURE
PLAN OF 50' UNIT
STAGE II

NORTH CAROLINA PROFESSIONAL SEAL 15779 ENGINEER JOHN R. DUGGINS, JR.
3/14/12

REVISIONS						SHEET NO.
NO.	BY:	DATE:	NO.	BY:	DATE:	S-9
1			3			TOTAL SHEETS
2			4			21

ASSEMBLED BY :	A. SORSENGINH	DATE :	11/2/11
CHECKED BY :	B. MATHEW	DATE :	1/12
DRAWN BY : DGE	5/09		
CHECKED BY : BCH	6/09		

14-MAR-2012 11:19
S:\DPG4\John\LIBR_Files\BD-5114M\Final_Plans\BD-5114M_SD_S*.dgn
jdugginS

BILL OF MATERIAL FOR VERTICAL CONCRETE BARRIER RAIL

BAR	BARS PER PAIR OF EXTERIOR UNITS 50' UNIT	TOTAL NO.	SIZE	TYPE	LENGTH	WEIGHT
✱B13	80	80	#5	STR	14'-3"	1189
✱ S4	118	118	#5	2	7'-2"	882
✱ EPOXY COATED REINFORCING STEEL				LBS.		2071
CLASS AA CONCRETE				CU.YDS.		13.1
TOTAL VERTICAL CONCRETE BARRIER RAIL				LN. FT.		100.29

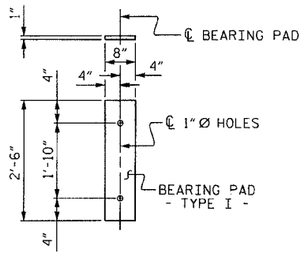

FIXED END
(TYPE I - 18 REQ'D)

GRADE 270 STRANDS	0.6"Ø L.R.
AREA (SQUARE INCHES)	0.217
ULTIMATE STRENGTH (LBS. PER STRAND)	58,600
APPLIED PRESTRESS (LBS. PER STRAND)	43,950

ELASTOMERIC BEARING DETAILS

ELASTOMER IN ALL BEARINGS SHALL BE 50 DUROMETER HARDNESS.

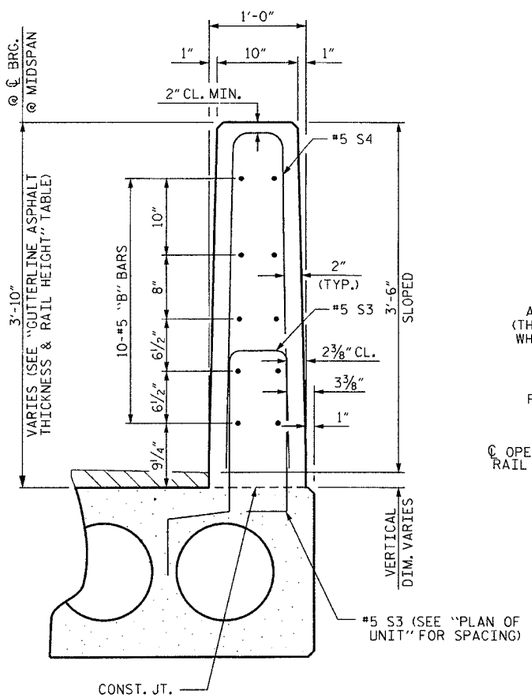

VERTICAL CONCRETE BARRIER RAIL SECTION

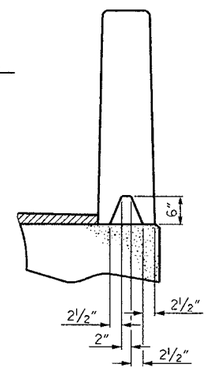

SECTION S-S
AT DAM IN OPEN JOINT
(THIS IS TO BE USED ONLY WHEN SLIP FORM IS USED)

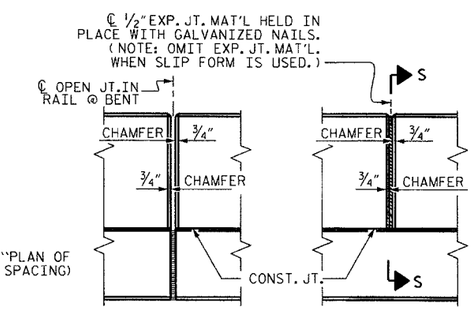

ELEVATION AT EXPANSION JOINTS

BAR TYPES

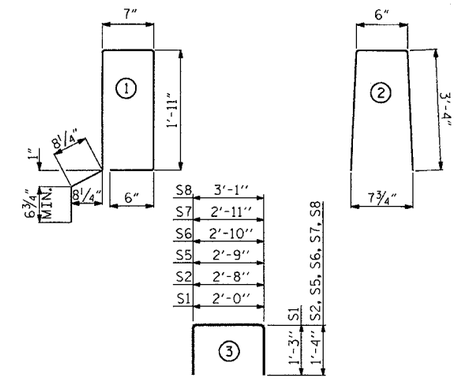

ALL BAR DIMENSIONS ARE OUT TO OUT

BILL OF MATERIAL FOR ONE 50' CORED SLAB UNIT

BAR	NUMBER	SIZE	TYPE	EXTERIOR UNIT LENGTH	EXTERIOR UNIT WEIGHT	INTERIOR UNIT LENGTH	INTERIOR UNIT WEIGHT
B6	4	#4	STR	25'-8"	69	25'-8"	69
S1	8	#5	3	4'-6"	38	4'-6"	38
S2	102	#4	3	5'-4"	363	5'-4"	363
✱ S3	59	#5	1	6'-2"	379		
S5	4	#4	3	5'-5"	14	5'-5"	14
S6	4	#4	3	5'-6"	15	5'-6"	15
S7	4	#4	3	5'-7"	15	5'-7"	15
S8	4	#4	3	5'-9"	15	5'-9"	15
REINFORCING STEEL			LBS.		529		529
✱ EPOXY COATED REINFORCING STEEL			LBS.		379		
6500 P.S.I. CONCRETE			CU. YDS.		7.3		7.3
0.6"Ø L.R. STRANDS			No.		19		19

CORED SLABS REQUIRED

	NUMBER	LENGTH	TOTAL LENGTH
50' UNIT			
EXTERIOR C.S.	2	50'-0"	100'-0"
INTERIOR C.S.	7	50'-0"	350'-0"
TOTAL	9		450'-0"

DEAD LOAD DEFLECTION AND CAMBER

	3'-0" x 1'-9"
50' CORED SLAB UNIT	0.6"Ø L.R. STRAND
CAMBER (SLAB ALONE IN PLACE)	2½" ↑
DEFLECTION DUE TO SUPERIMPOSED DEAD LOAD✱✱	¼" ↓
FINAL CAMBER	2¼" ↑

✱✱ INCLUDES FUTURE WEARING SURFACE

GUTTERLINE ASPHALT THICKNESS & RAIL HEIGHT

24'-10" CLEAR ROADWAY	ASPHALT OVERLAY THICKNESS:	RAIL HEIGHT
	@ MID-SPAN	@ MID-SPAN
	SUPERED SECTION	
50' UNITS	1½"	3'-7¾"

NOTES

ALL PRESTRESSING STRANDS SHALL BE 7-WIRE LOW RELAXATION GRADE 270 STRANDS AND SHALL CONFORM TO AASHTO M203 EXCEPT FOR SAMPLING REQUIREMENTS WHICH SHALL BE IN ACCORDANCE WITH THE STANDARD SPECIFICATIONS.

ALL REINFORCING STEEL CAST WITH THE CORED SLAB SECTIONS SHALL BE GRADE 60 AND SHALL BE INCLUDED IN THE UNIT PRICE BID FOR PRESTRESSED CONCRETE CORED SLABS.

RECESSES FOR TRANSVERSE STRANDS SHALL BE GROUTED AFTER THE TENSIONING OF THE STRANDS.

THE 2½"Ø DOWEL HOLES AT FIXED ENDS OF SLAB SECTIONS SHALL BE FILLED WITH NON-SHRINK GROUT.

THE 2"Ø BACKER ROD SHALL CONFORM TO THE REQUIREMENTS OF TYPE M BOND BREAKER. SEE SECTION 1028 OF THE STANDARD SPECIFICATIONS.

WHEN CORED SLABS ARE CAST, AN INTERNAL HOLD-DOWN SYSTEM SHALL BE EMPLOYED TO PREVENT VOIDS FROM RISING OR MOVING SIDEWAYS. AT LEAST SIX WEEKS PRIOR TO CASTING CORED SLABS, THE CONTRACTOR SHALL SUBMIT TO THE ENGINEER FOR REVIEW AND COMMENT, DETAILED DRAWINGS OF THE PROPOSED HOLD-DOWN SYSTEM. IN ADDITION TO STRUCTURAL DETAILS, LOCATION AND SPACING OF THE HOLD-DOWNS SHALL BE INDICATED.

ALL REINFORCING STEEL IN THE VERTICAL CONCRETE BARRIER RAIL SHALL BE EPOXY COATED.

PRESTRESSING STRANDS SHALL BE CUT FLUSH WITH THE CORED SLAB UNIT ENDS.

APPLY EPOXY PROTECTIVE COATING TO CORED SLAB UNIT ENDS.

GROOVED CONTRACTION JOINTS, ½" IN DEPTH, SHALL BE TOOLED IN ALL EXPOSED FACES OF THE BARRIER RAIL AND IN ACCORDANCE WITH ARTICLE 825-10(B) OF THE STANDARD SPECIFICATIONS. A CONTRACTION JOINT SHALL BE LOCATED AT EACH THIRD POINT BETWEEN BARRIER RAIL EXPANSION JOINTS. ONLY ONE CONTRACTION JOINT IS REQUIRED AT MIDPOINT OF BARRIER RAIL SEGMENTS LESS THAN 20 FEET IN LENGTH AND NO CONTRACTION JOINTS ARE REQUIRED FOR THOSE SEGMENTS LESS THAN 10 FEET IN LENGTH.

TRANSVERSE POST TENSIONING OF THE CORED SLAB UNITS SHALL BE DONE IN ACCORDANCE WITH THE STANDARD SPECIFICATIONS, EXCEPT THAT THE STRANDS SHALL BE 0.6"Ø AND TENSIONED TO 43,950 POUNDS.

THE TRANSFER OF LOAD FROM THE ANCHORAGES TO THE CORED SLAB UNIT SHALL BE DONE WHEN THE CONCRETE HAS REACHED A COMPRESSIVE STRENGTH OF NOT LESS THAN THE REQUIRED STRENGTH SHOWN IN THE "CONCRETE RELEASE STRENGTH" TABLE.

FOR GROUT FOR STRUCTURES, SEE SPECIAL PROVISIONS.

CONCRETE RELEASE STRENGTH

UNIT	PSI
50' UNIT	4900

PROJECT NO. BD-5114M
POLK COUNTY
STATION: 13+35.33 -L-

SHEET 5 OF 5

STATE OF NORTH CAROLINA
DEPARTMENT OF TRANSPORTATION
RALEIGH

3'-0" X 1'-9"
PRESTRESSED CONCRETE
CORED SLAB UNIT
60° SKEW

NORTH CAROLINA PROFESSIONAL SEAL 15779 ENGINEER JOHN R. DUGGINS, JR.
5/22/12

REVISIONS								SHEET NO.
NO.	BY:	DATE:	NO.	BY:	DATE:			S-10
1			3					TOTAL SHEETS
2			4					21

ASSEMBLED BY :	A. SORSENGINH	DATE :	9/2011
CHECKED BY :	B. MATHEW	DATE :	1/2012
DRAWN BY :	DGE 5/09		
CHECKED BY :	BCH 6/09		

22-MAY-2012 15:39
S:\DPG4\John\LIBR_Files\BD-5114M\Final_Plans\BD-5114M_SD_S*.dgn
jdugglns

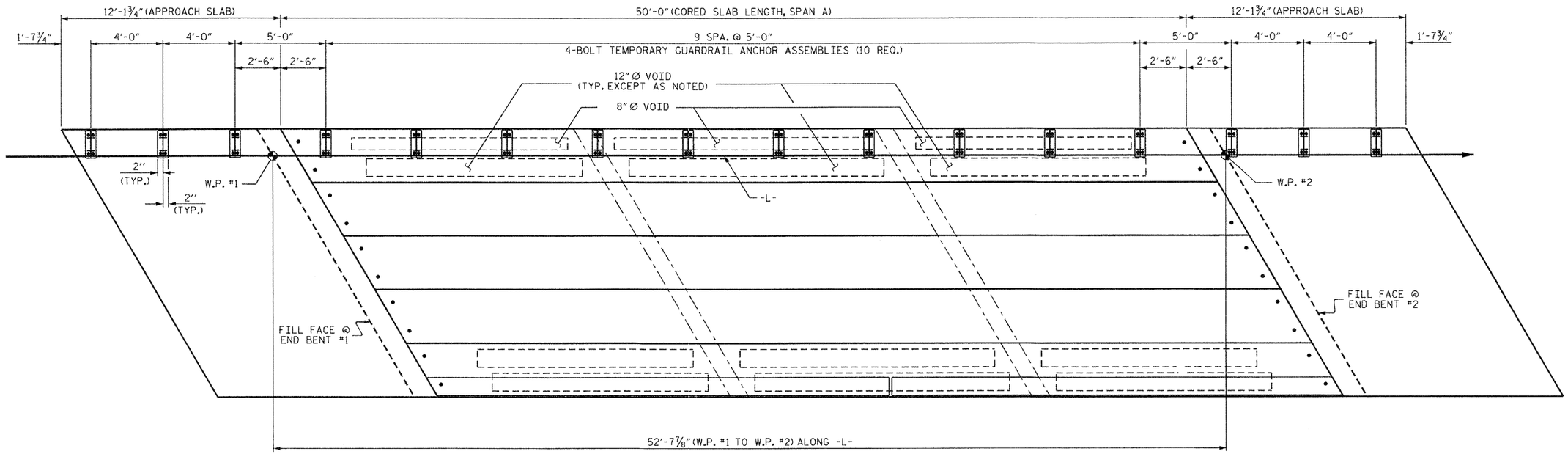

RAIL POST SPACING FOR TEMPORARY GUARDRAIL - STAGE I

NOTES

THE TEMPORARY GUARDRAIL ANCHOR ASSEMBLY SHALL CONSIST OF THE FOLLOWING COMPONENTS:

A. A. FERRULES SHALL BE MADE FROM STEEL MEETING THE REQUIREMENTS OF AASHTO M169, GRADE 12L14 AND SHALL HAVE A MINIMUM LENGTH OF THREADS OF 2½".

B. 4 - 1" Ø X 2¼" BOLTS WITH WASHERS. BOLTS SHALL CONFORM TO THE REQUIREMENTS OF ASTM A307. BOLTS AND WASHERS SHALL BE GALVANIZED. (AT THE CONTRACTOR'S OPTION, STAINLESS STEEL BOLTS AND WASHERS MAY BE USED AS AN ALTERNATE FOR THE 1" Ø X 2¼" GALVANIZED BOLTS AND WASHERS. THEY SHALL CONFORM TO OR EXCEED THE MECHANICAL REQUIREMENTS OF ASTM A307. THE USE OF THIS ALTERNATE SHALL BE APPROVED BY THE ENGINEER.)

C. WIRE STRUTS SHOWN IN THE TEMPORARY GUARDRAIL ANCHOR ASSEMBLY DETAIL ARE THE MINIMUM ALLOWABLE SIZE AND SHALL HAVE A MINIMUM TENSILE STRENGTH OF 100,000 PSI. AS AN OPTION, A 7/16" Ø WIRE STRUT WITH A MINIMUM TENSILE STRENGTH OF 90,000 PSI IS ACCEPTABLE.

TEMPORARY GUARDRAIL ANCHOR ASSEMBLY WITH BOLTS SHALL BE ASSEMBLED IN THE SHOP. BOLT THREADS MAY BE RECUT AS NECESSARY TO INSURE FIT.

THE COST OF THE TEMPORARY GUARDRAIL ANCHOR ASSEMBLY COMPLETE IN PLACE, SHALL BE INCLUDED, AS APPLICABLE, IN THE UNIT CONTRACT PRICE BID FOR 3'-0" X 1'-9" PRESTRESSED CONCRETE CORED SLAB OR LUMP SUMP PRICE BID FOR APPROACH SLABS.

FERRULES TO BE PLUGGED DURING CASTING OF THE CORED SLAB UNITS OR POURING OF APPROACH SLAB AS RECOMMENDED BY THE MANUFACTURER.

AT THE CONTRACTOR'S OPTION, FERRULES WITH OPEN OR CLOSED ENDS MAY BE USED.

PAYMENT FOR TEMPORARY GUARDRAIL, POST, AND POST BASE PLATES IS INCLUDED IN ROADWAY PAY ITEMS.

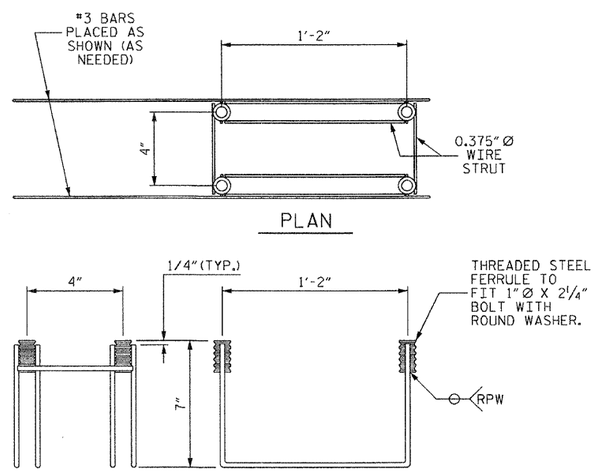

MINIMUM LENGTH OF THREADS IN INSERT (FERRULE): 2½"

TEMPORARY GUARDRAIL ANCHOR ASSEMBLY

(10 ASSEMBLIES REQUIRED IN THE TYPE III CORED SLAB UNITS)
(6 ASSEMBLIES REQUIRED IN THE APPROACH SLABS)

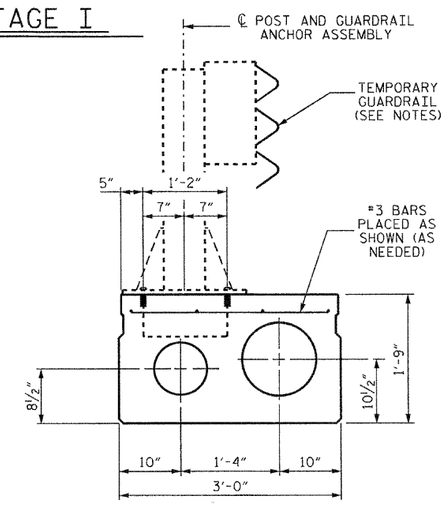

SECTION OF ANCHOR ASSEMBLY LOCATION

(TYPE III UNIT OF STAGE I)
THE #3 BARS ARE INCIDENTAL AND THEIR COST SHALL BE INCLUDED IN THE PRICE BID FOR THE PRESTRESSED CONCRETE CORED SLABS.

PROJECT NO. BD-5114M
POLK COUNTY
STATION: 13+35.33 -L-

STATE OF NORTH CAROLINA
DEPARTMENT OF TRANSPORTATION
RALEIGH

ANCHORAGE DETAILS FOR TEMPORARY GUARDRAIL ANCHOR ASSEMBLY FOR TYPE III CORED SLAB UNIT STAGE I

NORTH CAROLINA PROFESSIONAL SEAL 15779 ENGINEER JOHN R. DUGGINS, JR.
5/22/12

REVISIONS						SHEET NO.
NO.	BY:	DATE:	NO.	BY:	DATE:	S-11
1			3			TOTAL SHEETS
2			4			21

DRAWN BY : A. SORSENGINH DATE : 10/4/11
CHECKED BY : B. MATHEW DATE : 1/2012

22-MAY-2012 15:38
S:\DPG4\John\LIBR_Files\BD-5114M\Final_Plans\BD-5114M_SD_GR.dgn
jduggins

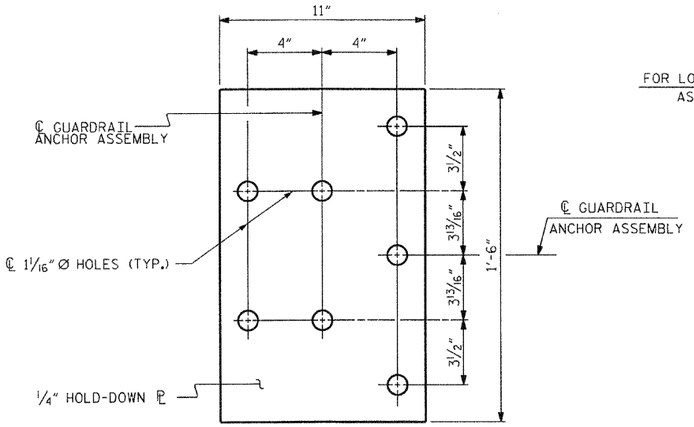

PLAN

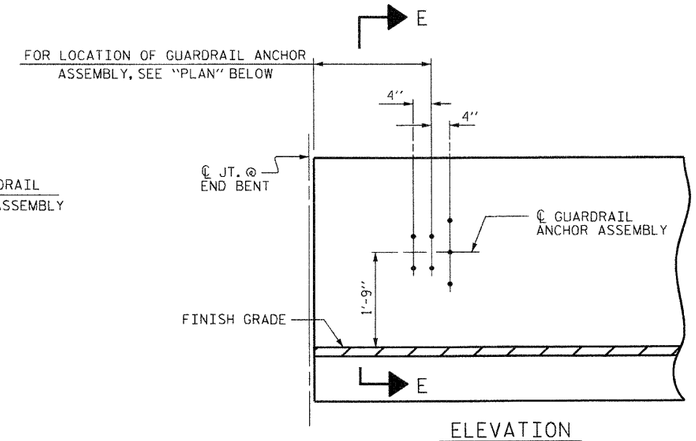

ELEVATION

NOTES

THE GUARDRAIL ANCHOR ASSEMBLY SHALL CONSIST OF A 1/4" HOLD DOWN PLATE AND 7 - 7/8" Ø BOLTS WITH NUTS AND WASHERS.

THE HOLD-DOWN PLATE SHALL CONFORM TO AASHTO M270 GRADE 36. AFTER FABRICATION, THE HOLD-DOWN PLATE SHALL BE HOT-DIP GALVANIZED IN ACCORDANCE WITH AASHTO M111.

BOLTS SHALL CONFORM TO THE REQUIREMENTS OF ASTM A307 AND NUTS SHALL CONFORM TO THE REQUIREMENTS OF AASHTO M291. BOLTS, NUTS AND WASHERS SHALL BE GALVANIZED. (AT THE CONTRACTOR'S OPTION, STAINLESS STEEL BOLTS, NUTS AND WASHERS MAY BE USED AS AN ALTERNATE FOR THE 7/8" Ø GALVANIZED BOLTS, NUTS AND WASHERS. THEY SHALL CONFORM TO OR EXCEED THE MECHANICAL REQUIREMENTS OF ASTM A307. THE USE OF THIS ALTERNATE SHALL BE APPROVED BY THE ENGINEER.)

THE GUARDRAIL ANCHOR ASSEMBLY IS REQUIRED AT ALL POINTS WHERE APPROACH GUARDRAIL IS TO BE ATTACHED TO THE END OF BARRIER RAIL. FOR POINTS OF ATTACHMENT, SEE SKETCH.

AFTER INSTALLATION, THE EXPOSED THREAD OF THE BOLT SHALL BE BURRED WITH A SHARP POINTED TOOL.

THE COST OF THE GUARDRAIL ANCHOR ASSEMBLY SHALL BE INCLUDED IN THE UNIT CONTRACT PRICE BID FOR VERTICAL CONCRETE BARRIER RAIL.

THE VERTICAL REINFORCING BARS MAY BE SHIFTED SLIGHTLY IN THE VERTICAL CONCRETE BARRIER RAIL TO CLEAR ASSEMBLY BOLTS.

THE 1 1/4" Ø HOLES SHALL BE FORMED OR DRILLED WITH A CORE BIT. IMPACT TOOLS WILL NOT BE PERMITTED. ANY CONCRETE DAMAGED BY THIS WORK SHALL BE REPAIRED TO THE SATISFACTION OF THE ENGINEER.

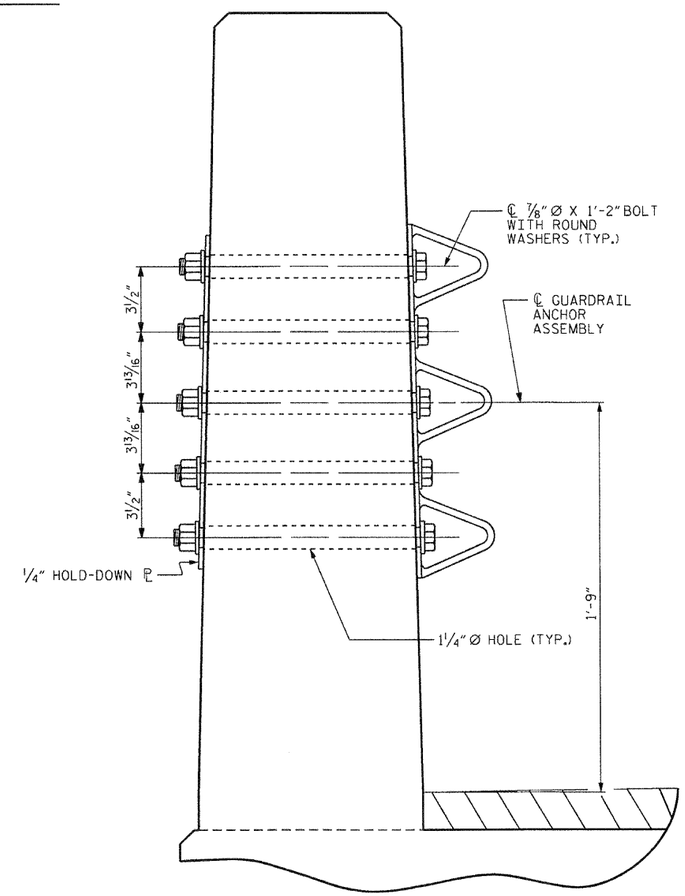

SECTION E-E

GUARDRAIL ANCHOR ASSEMBLY DETAILS

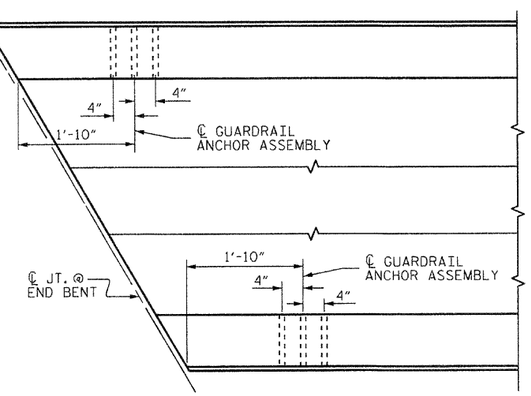

PLAN

LOCATION OF ANCHORS FOR GUARDRAIL

END BENT #1 SHOWN, END BENT #2 SIMILAR.

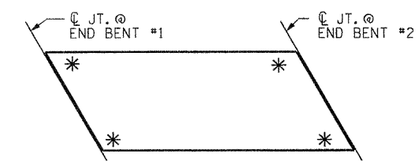

SKETCH SHOWING POINTS OF ATTACHMENT

✳ DENOTES GUARDRAIL ANCHOR ASSEMBLY

PROJECT NO. BD-5114M

POLK COUNTY

STATION: 13+35.33 -L-

STATE OF NORTH CAROLINA
DEPARTMENT OF TRANSPORTATION
RALEIGH

STANDARD
GUARDRAIL ANCHORAGE FOR VERTICAL CONCRETE BARRIER RAIL

NORTH CAROLINA PROFESSIONAL SEAL 15779 ENGINEER JOHN R. DUGGINS, JR.
3/14/12

REVISIONS						SHEET NO.
NO.	BY:	DATE:	NO.	BY:	DATE:	S-12
1			3			TOTAL SHEETS
2			4			21

ASSEMBLED BY : A. SORSENGINH		DATE : 11/7/11	
CHECKED BY : B. MATHEW		DATE : 1/2012	
DRAWN BY : MAA 5/10	ADDED 5/6/10		
CHECKED BY : GM 5/10	REV. 10/1/11	MAA/GM	
	REV. 12/5/11	MAA/GM	

14-MAR-2012 11:17
S:\DPG4\John\LIBR_Files\BD-5114M\Final_Plans\BD-5114M_SD_GR.dgn
jduggins

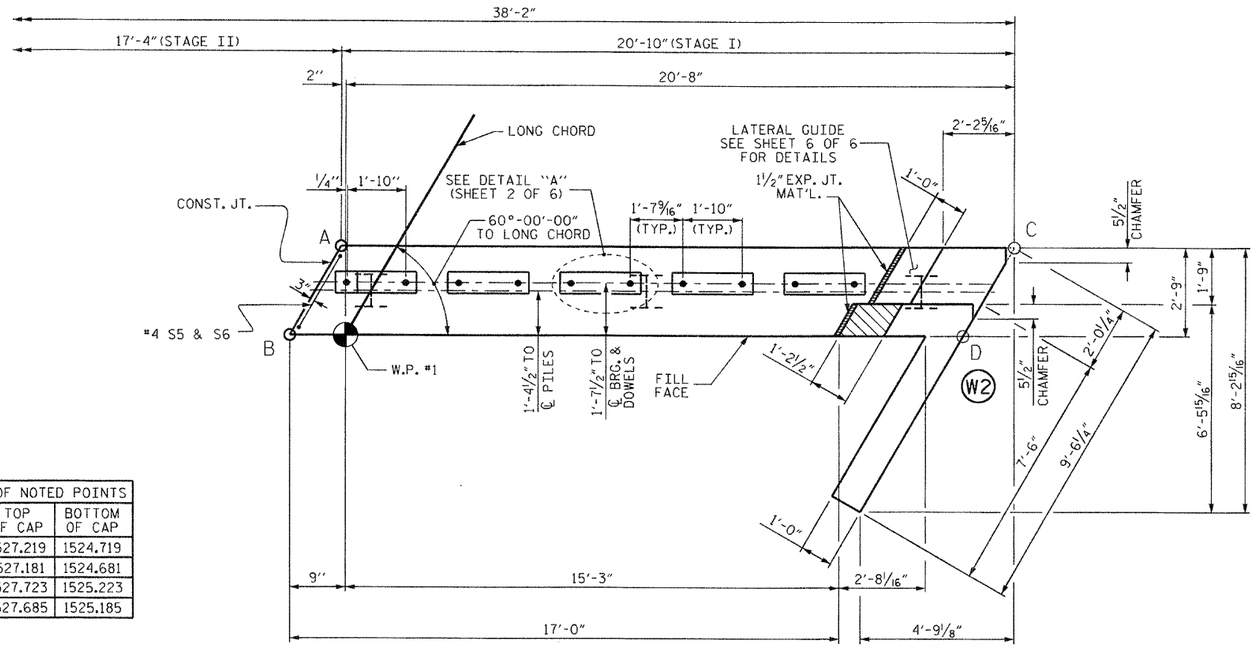

PLAN

ELEVATIONS OF NOTED POINTS		
	TOP OF CAP	BOTTOM OF CAP
POINT A	1527.219	1524.719
POINT B	1527.181	1524.681
POINT C	1527.723	1525.223
POINT D	1527.685	1525.185

TOP OF PILE ELEVATIONS	
3	1525.754
4	1525.960
5	1526.166

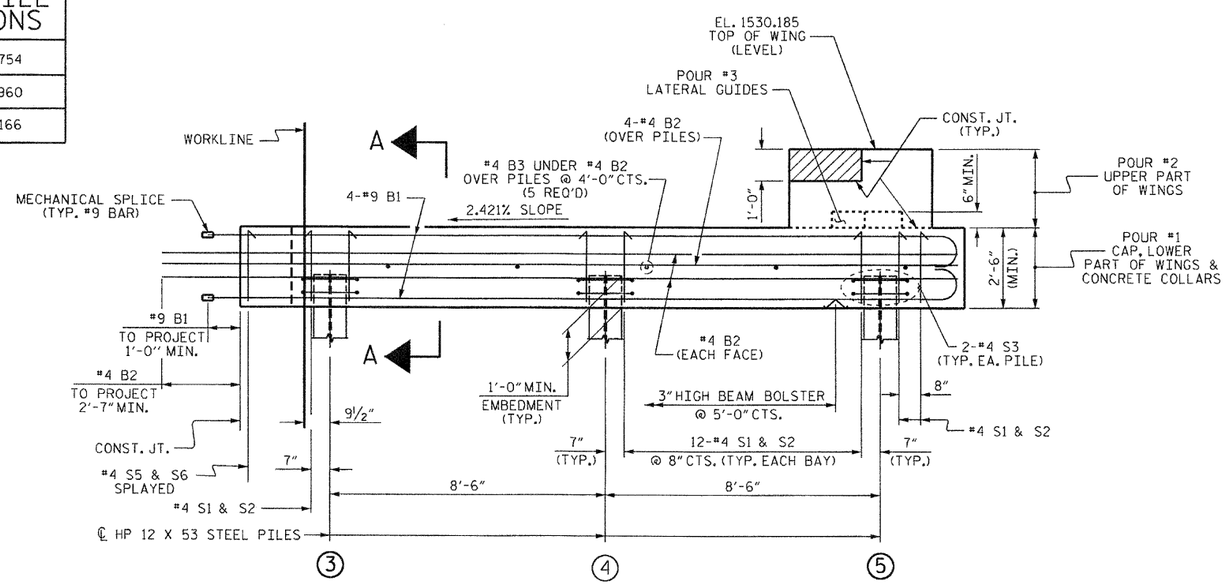

ELEVATION

FOR SECTION A-A, SEE SHEET 2 OF 6

CONCRETE COLLARS FOR STEEL PILES NOT SHOWN IN PLAN AND ELEVATION VIEWS FOR CLARITY. SEE "CORROSION PROTECTION FOR STEEL PILES DETAIL", SHEET 6 OF 6.

NOTES

STIRRUPS IN CAP MAY BE SHIFTED AS NECESSARY TO CLEAR DOWELS.

THE LATERAL GUIDES ARE NOT TO BE POURED UNTIL AFTER THE CORED SLAB UNITS ARE IN PLACE.

THE CONCRETE IN THE SHADED AREA OF THE WING SHALL BE POURED AFTER THE VERTICAL CONCRETE BARRIER RAIL IS CAST IF SLIP FORMING IS USED.

FOR PILE SPLICE DETAILS, SEE SHEET 6 OF 6.

FOR WING DETAILS, SEE SHEET 5 OF 6.

THE CONTRACTOR HAS THE OPTION TO OMIT THE LATERAL GUIDE IF APPROVED BY THE ENGINEER.

PROJECT NO. BD-5114M

POLK COUNTY

STATION: 13+35.33 -L-

SHEET 1 OF 6

STATE OF NORTH CAROLINA
DEPARTMENT OF TRANSPORTATION
RALEIGH

SUBSTRUCTURE
END BENT No. 1
STAGE I

NORTH CAROLINA PROFESSIONAL SEAL 15779 ENGINEER JOHN R. DUGGINS, JR.

5/22/12

REVISIONS							
NO.	BY:	DATE:	NO.	BY:	DATE:	SHEET NO.	
1			3			S-13	
2			4			TOTAL SHEETS	
						21	

ASSEMBLED BY :	A. SORSENGINH	DATE :	11/7/2011
CHECKED BY :	B. MATHEW	DATE :	1/2012
DRAWN BY :	DGE	01/10	
CHECKED BY :	MKT	01/10	

22-MAY-2012 15:38
S:\OPGS\John\LIBR_Files\BD-5114M\Final_Plans\BD-5114M_SD_E*.dgn
jduggins

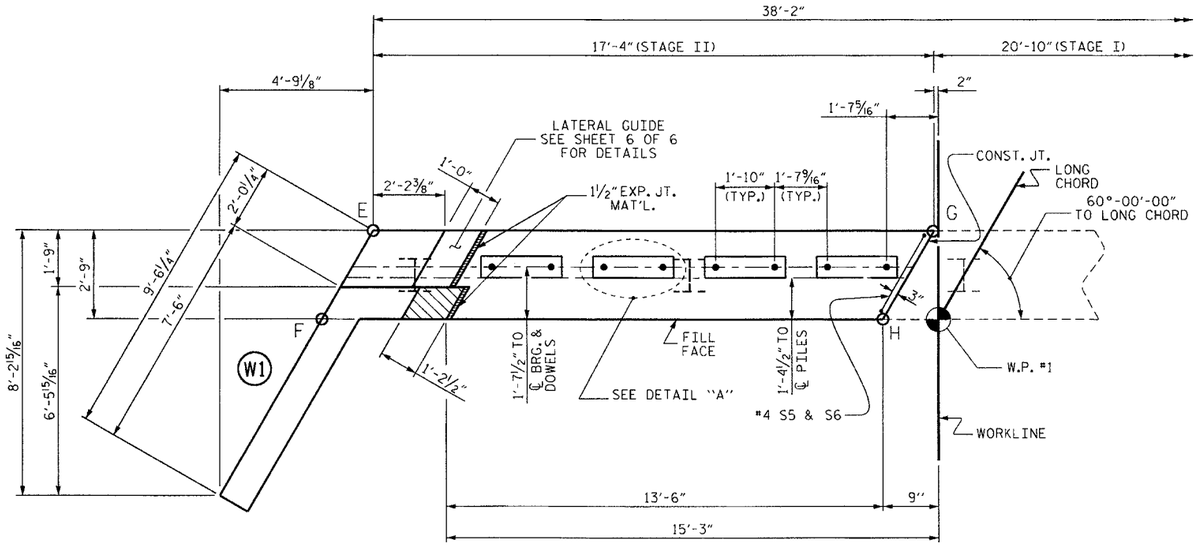

PLAN

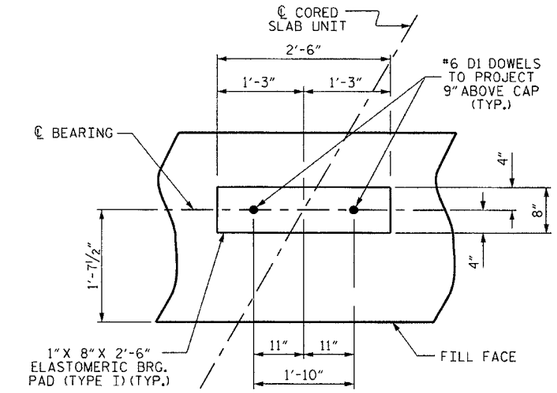

DETAIL "A"

ELEVATIONS OF NOTED POINTS		
	TOP OF CAP	BOTTOM OF CAP
POINT E	1526.799	1524.299
POINT F	1526.761	1524.261
POINT G	1527.219	1524.719
POINT H	1527.181	1524.681

TOP OF PILE ELEVATIONS	
1	1525.343
2	1525.549

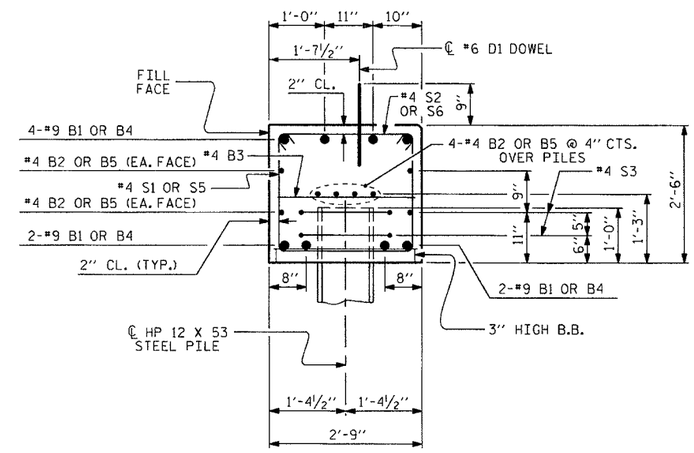

SECTION A-A

(CONCRETE COLLAR NOT SHOWN FOR CLARITY. SEE "CORROSION PROTECTION FOR STEEL PILES DETAIL.")

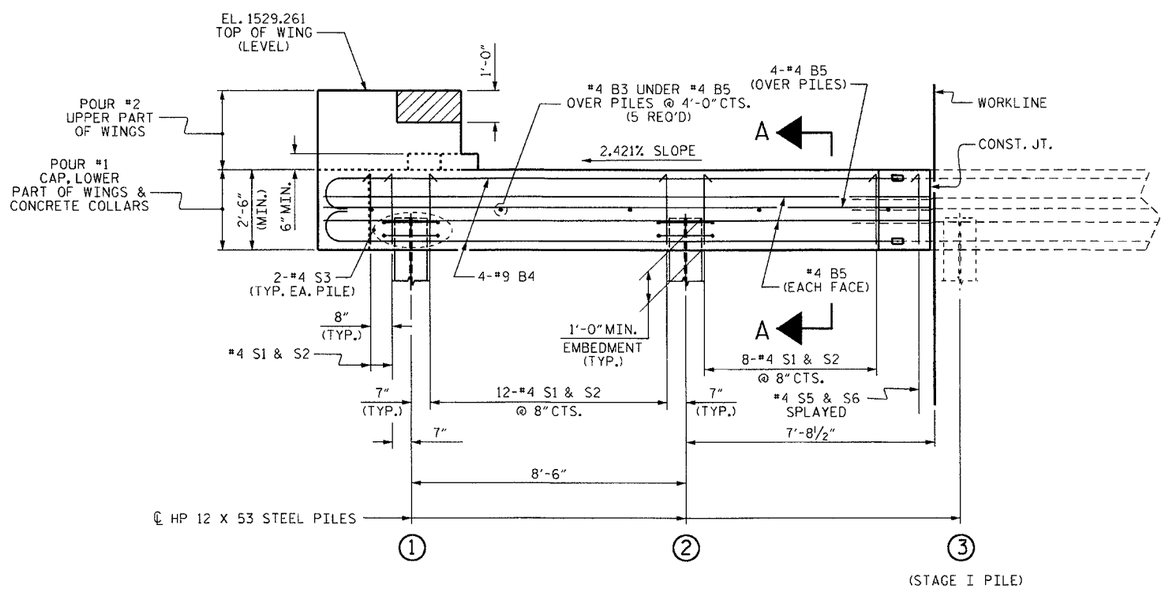

ELEVATION

CONCRETE COLLARS FOR STEEL PILES NOT SHOWN IN PLAN AND ELEVATION VIEWS FOR CLARITY. SEE "CORROSION PROTECTION FOR STEEL PILES DETAIL", SHEET 6 OF 6.

PROJECT NO. BD-5114M

POLK COUNTY

STATION: 13+35.33 -L-

SHEET 2 OF 6

STATE OF NORTH CAROLINA
DEPARTMENT OF TRANSPORTATION
RALEIGH

SUBSTRUCTURE
END BENT No. 1
STAGE II

NORTH CAROLINA PROFESSIONAL SEAL 15779 ENGINEER JOHN R. DUGGINS, JR.
3/14/12

REVISIONS								SHEET NO.
NO.	BY:	DATE:	NO.	BY:	DATE:			S-14
1			3					TOTAL SHEETS
2			4					21

ASSEMBLED BY :	A. SORSENGINH	DATE :	11/7/2011
CHECKED BY :	B. MATHEW	DATE :	1/2012
DRAWN BY :	DGE	01/10	
CHECKED BY :	MKT	01/10	

14-MAR-2012 11:15
S:\DPG4\John\LIBR_Files\BD-5114M\Final_Plans\BD-5114M_SD_E*.dgn
jduggins

NOTES

STIRRUPS IN CAP MAY BE SHIFTED AS NECESSARY TO CLEAR DOWELS.

THE LATERAL GUIDES ARE NOT TO BE POURED UNTIL AFTER THE CORED SLAB UNITS ARE IN PLACE.

THE CONCRETE IN THE SHADED AREA OF THE WING SHALL BE POURED AFTER THE VERTICAL CONCRETE BARRIER RAIL IS CAST IF SLIP FORMING IS USED.

FOR PILE SPLICE DETAILS, SEE SHEET 6 OF 6.

FOR WING DETAILS, SEE SHEET 5 OF 6.

THE CONTRACTOR HAS THE OPTION TO OMIT THE LATERAL GUIDE IF APPROVED BY THE ENGINEER.

ELEVATIONS OF NOTED POINTS		
	TOP OF CAP	BOTTOM OF CAP
POINT A	1527.077	1524.577
POINT B	1527.038	1524.538
POINT C	1527.593	1525.093
POINT D	1527.554	1525.054

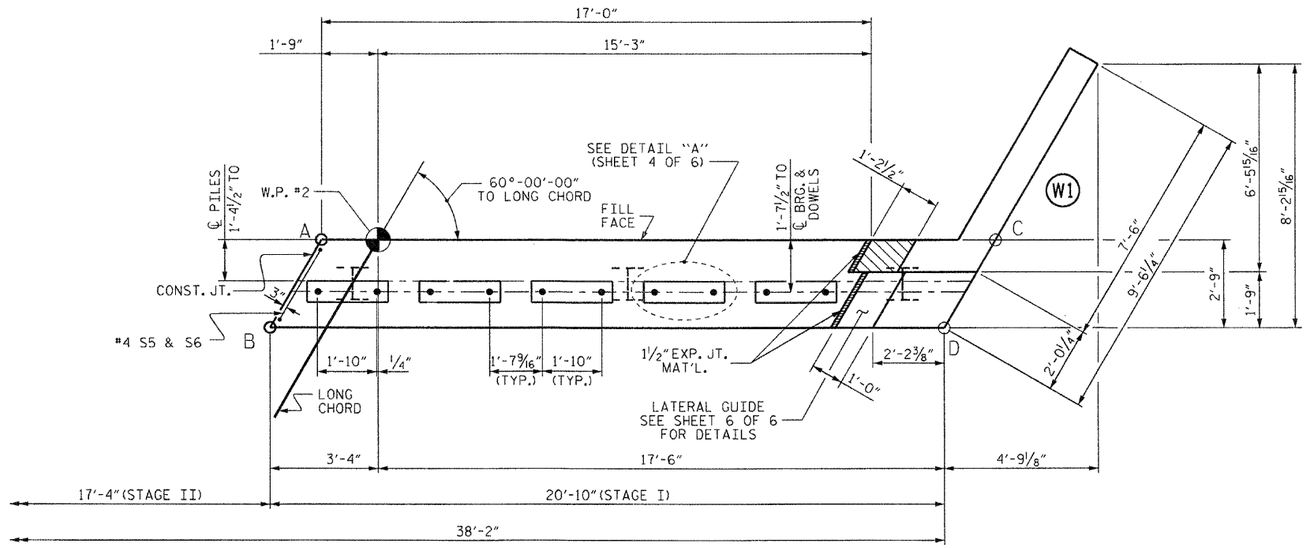

PLAN

TOP OF PILE ELEVATIONS	
3	1525.614
4	1525.824
5	1526.035

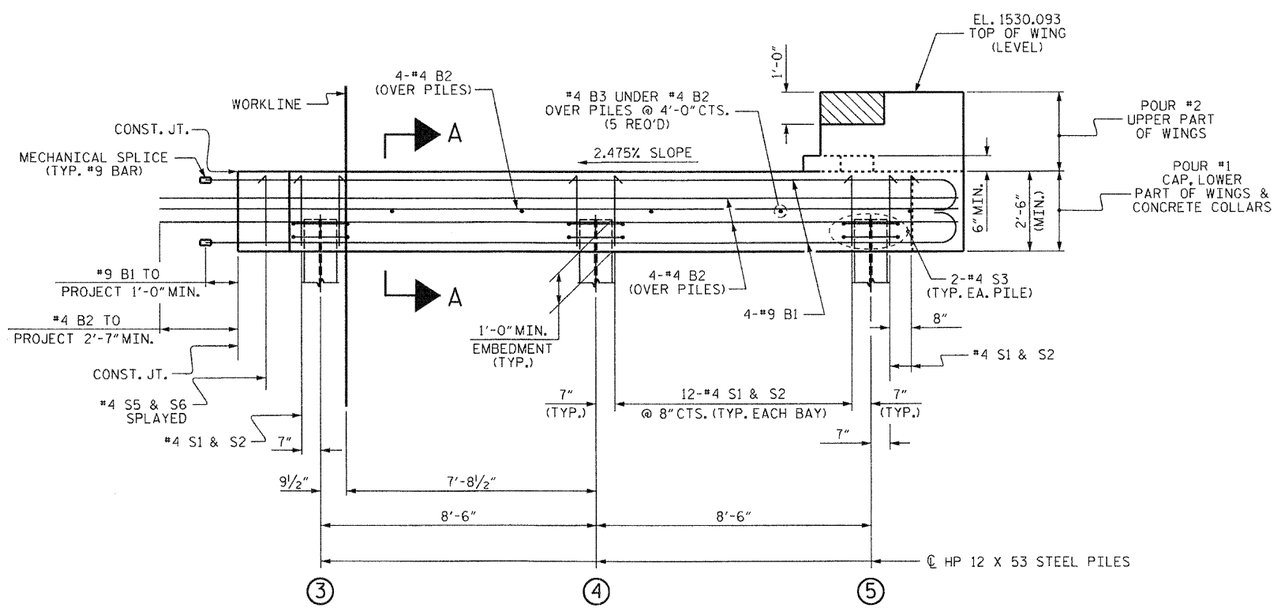

ELEVATION

FOR SECTION A-A, SEE SHEET 4 OF 6.
CONCRETE COLLARS FOR STEEL PILES NOT SHOWN IN PLAN AND ELEVATION VIEWS FOR CLARITY.
SEE "CORROSION PROTECTION FOR STEEL PILES DETAIL", SHEET 6 OF 6.

PROJECT NO. BD-5114M
POLK COUNTY
STATION: 13+35.33 -L-

SHEET 3 OF 6

STATE OF NORTH CAROLINA
DEPARTMENT OF TRANSPORTATION
RALEIGH

SUBSTRUCTURE
END BENT No. 2
STAGE I

NORTH CAROLINA PROFESSIONAL SEAL 15779 ENGINEER JOHN R. DUGGINS, JR.
5/22/12

REVISIONS						
NO.	BY:	DATE:	NO.	BY:	DATE:	
1			3			
2			4			

SHEET NO. S-15
TOTAL SHEETS 21

ASSEMBLED BY :	A. SORSENGINH	DATE :	10/10/2011
CHECKED BY :	B. MATHEW	DATE :	1/2012
DRAWN BY :	DGE	01/10	
CHECKED BY :	MKT	01/10	

22-MAY-2012 15:37
S:\DPG4\John\LIBR_Files\BD-5114M\Final_Plans\BD-5114M_SD_E*.dgn
jdugglns

ELEVATIONS OF NOTED POINTS		
	TOP OF CAP	BOTTOM OF CAP
POINT E	1526.649	1524.149
POINT F	1526.610	1524.110
POINT G	1527.077	1524.577
POINT H	1527.038	1524.538

TOP OF PILE ELEVATIONS	
1	1525.325
2	1525.535

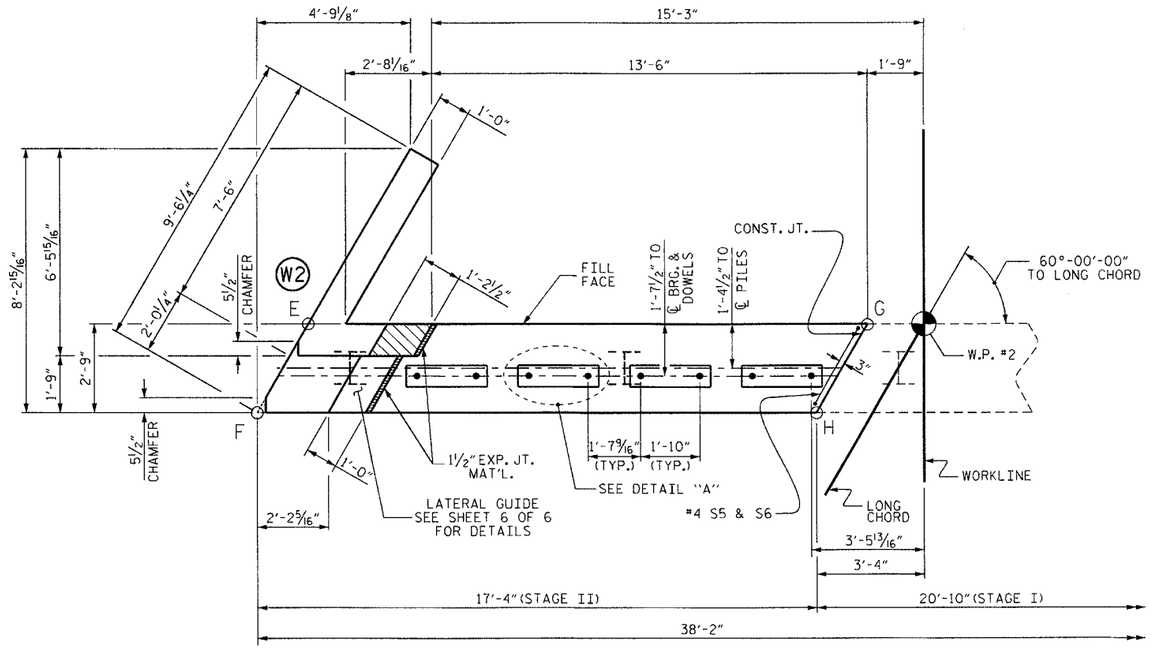

PLAN

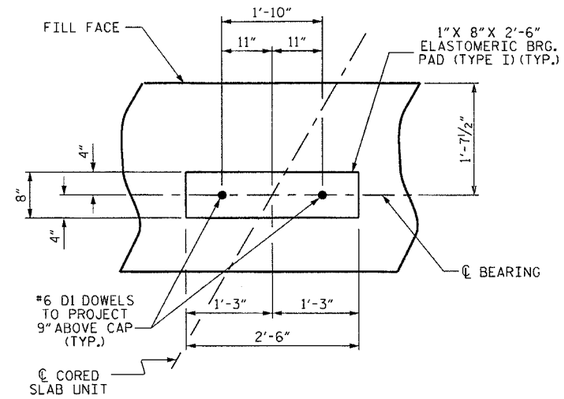

DETAIL "A"

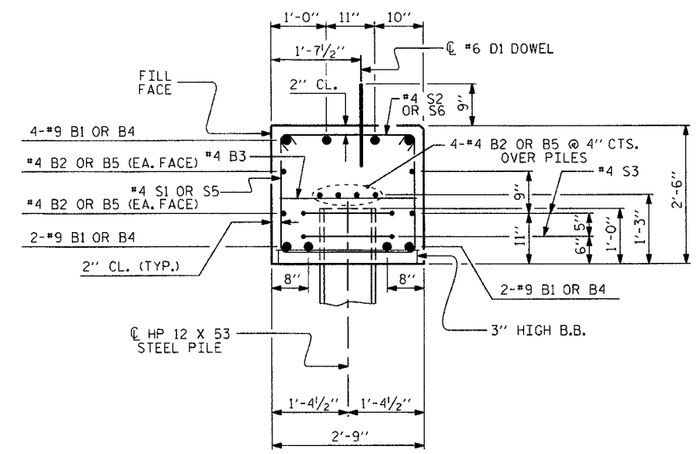

SECTION A-A

(CONCRETE COLLAR NOT SHOWN FOR CLARITY. SEE "CORROSION PROTECTION FOR STEEL PILES DETAIL.")

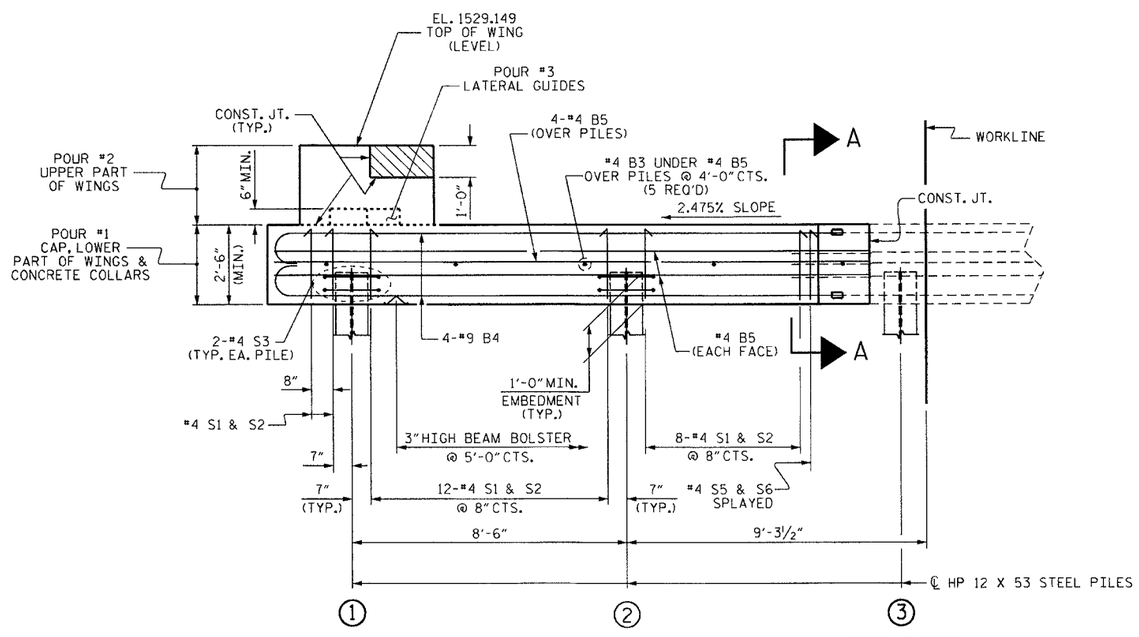

ELEVATION

CONCRETE COLLARS FOR STEEL PILES NOT SHOWN IN PLAN AND ELEVATION VIEWS FOR CLARITY. SEE "CORROSION PROTECTION FOR STEEL PILES DETAIL", SHEET 6 OF 6.

PROJECT NO. BD-5114M

POLK COUNTY

STATION: 13+35.33 -L-

SHEET 4 OF 6

STATE OF NORTH CAROLINA
DEPARTMENT OF TRANSPORTATION
RALEIGH

SUBSTRUCTURE
END BENT No. 2
STAGE II

NORTH CAROLINA PROFESSIONAL SEAL 15779 ENGINEER JOHN R. DUGGINS, JR.
3/14/12

REVISIONS							SHEET NO.
NO.	BY:	DATE:	NO.	BY:	DATE:		S-16
1			3				TOTAL SHEETS
2			4				21

ASSEMBLED BY :	A. SORSENGINH	DATE :	10/10/2011
CHECKED BY :	B. MATHEW	DATE :	1/2012
DRAWN BY :	DGE	01/10	
CHECKED BY :	MKT	01/10	

14-MAR-2012 11:14
S:\DP04\John\LIBR.Files\BD-5114M\Final.Plans\BD-5114M.SD_E*.dgn
jduggins

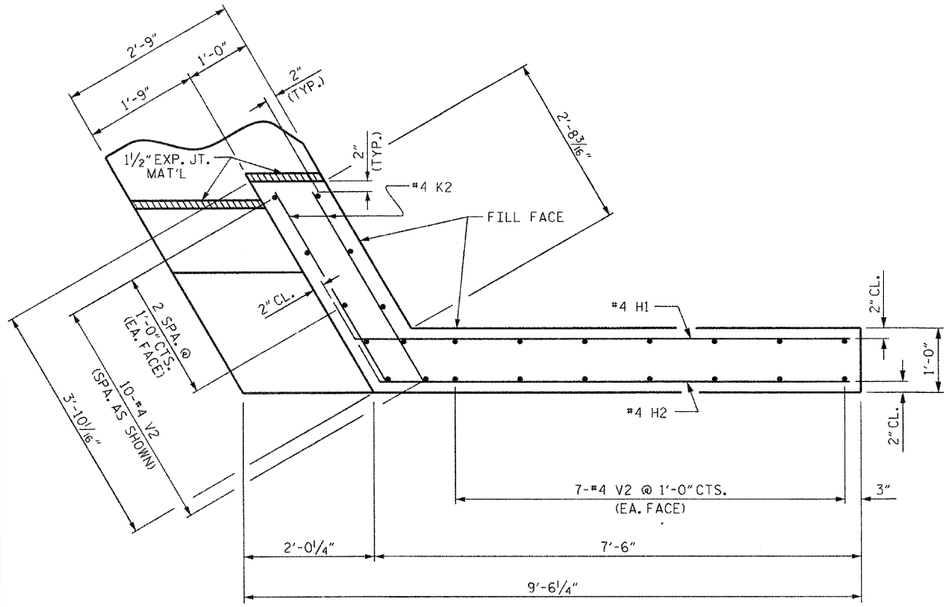

PLAN OF WING (W1)

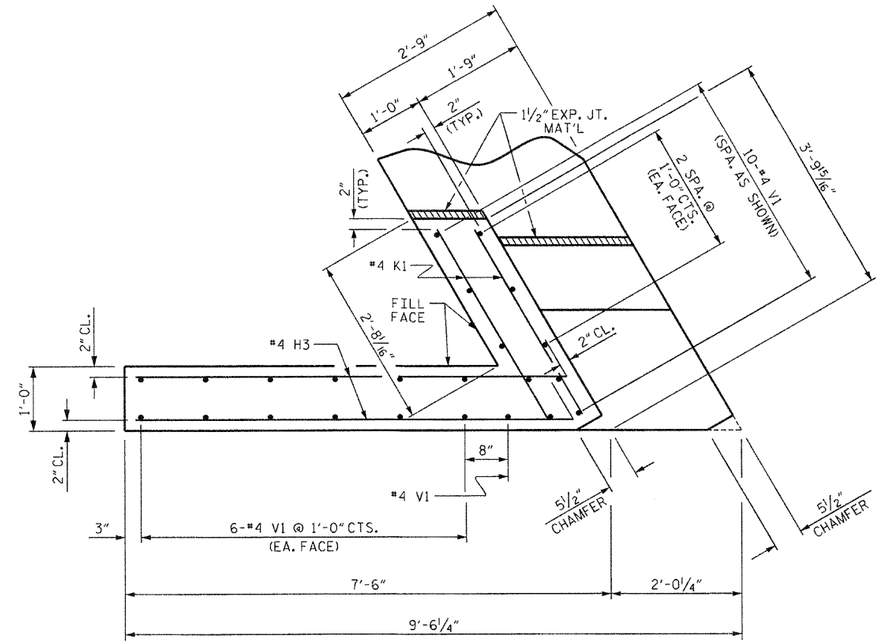

PLAN OF WING (W2)

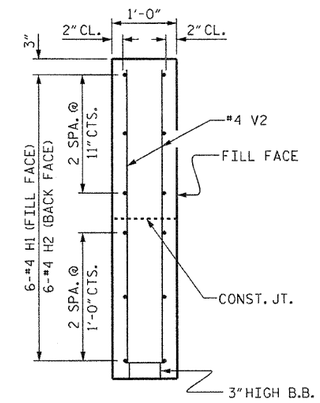

SECTION X-X

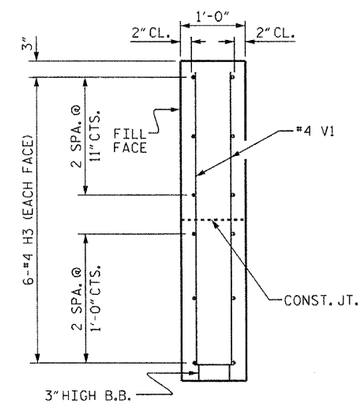

SECTION Y-Y

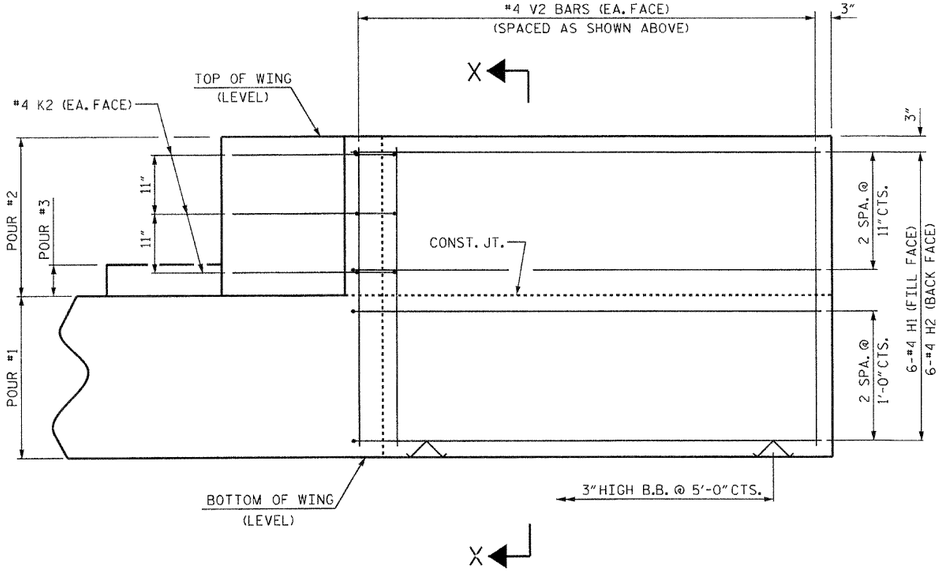

ELEVATION OF WING (W1)

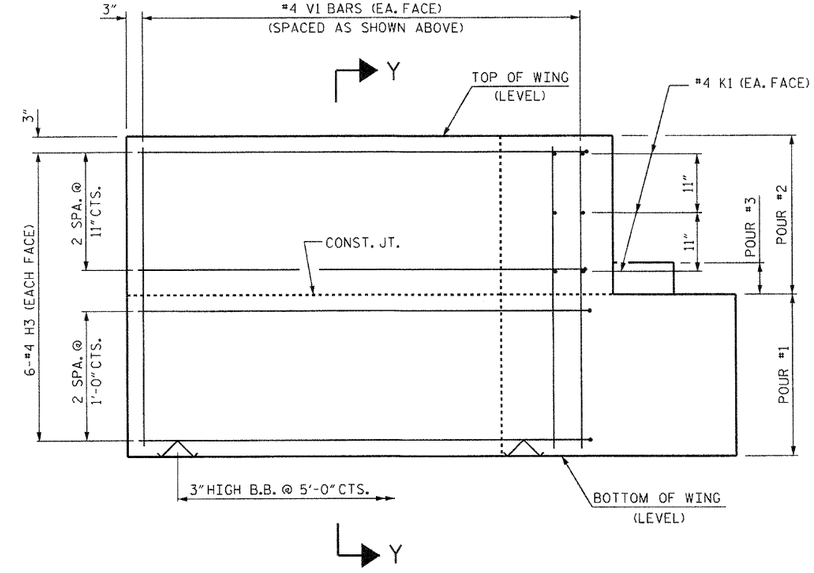

ELEVATION OF WING (W2)

WING DETAILS

PROJECT NO. BD-5114M

POLK COUNTY

STATION: 13+35.33 -L-

SHEET 5 OF 6

STATE OF NORTH CAROLINA
DEPARTMENT OF TRANSPORTATION
RALEIGH

SUBSTRUCTURE
END BENT
WING DETAILS

NORTH CAROLINA PROFESSIONAL SEAL 15779 ENGINEER JOHN E. DUGGINS, JR.
3/14/12

ASSEMBLED BY : A. SORSENGINH	DATE : 11/7/11
CHECKED BY : B. MATHEW	DATE : 1/2012
DRAWN BY : DGE 12/09	
CHECKED BY : MKT 01/10	

REVISIONS								SHEET NO.
NO.	BY:	DATE:	NO.	BY:	DATE:			S-17
1			3					TOTAL SHEETS
2			4					21

14-MAR-2012 11:14
S:\DP04\John\LIBR_Files\BD-5114M\Final_Plans\BD-5114M_SD_E*.dgn
jduggins

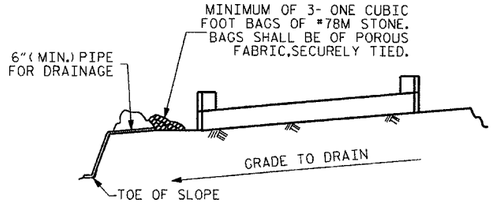

BAGGED STONE AND PIPE SHALL BE PLACED IMMEDIATELY AFTER COMPLETION OF END BENT EXCAVATION. PIPE MAY BE EITHER CONCRETE, CORRUGATED STEEL, CORRUGATED ALUMINUM ALLOY, OR CORRUGATED PLASTIC. PERFORATED PIPE WILL NOT BE ALLOWED.

BAGGED STONE SHALL REMAIN IN PLACE UNTIL THE ENGINEER DIRECTS THAT IT BE REMOVED. THE CONTRACTOR SHALL REMOVE AND DISPOSE OF SILT ACCUMULATIONS AT BAGGED STONE WHEN SO DIRECTED BY THE ENGINEER. BAGS SHALL BE REMOVED AND REPLACED WHENEVER THE ENGINEER DETERMINES THAT THEY HAVE DETERIORATED AND LOST THEIR EFFECTIVENESS.

NO SEPARATE PAYMENT WILL BE MADE FOR THIS WORK AND THE ENTIRE COST OF THIS WORK SHALL BE INCLUDED IN THE UNIT CONTRACT PRICE BID FOR THE SEVERAL PAY ITEMS.

TEMPORARY DRAINAGE AT END BENT

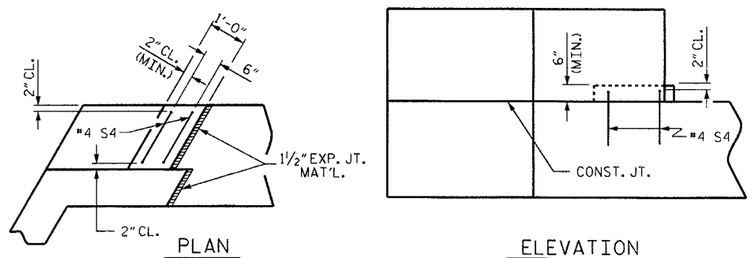

LATERAL GUIDE DETAILS

(END BENT No. 1, LEFT LATERAL GUIDE SHOWN, RIGHT END SIMILAR)
(END BENT No. 2 SIMILAR BY ROTATION)

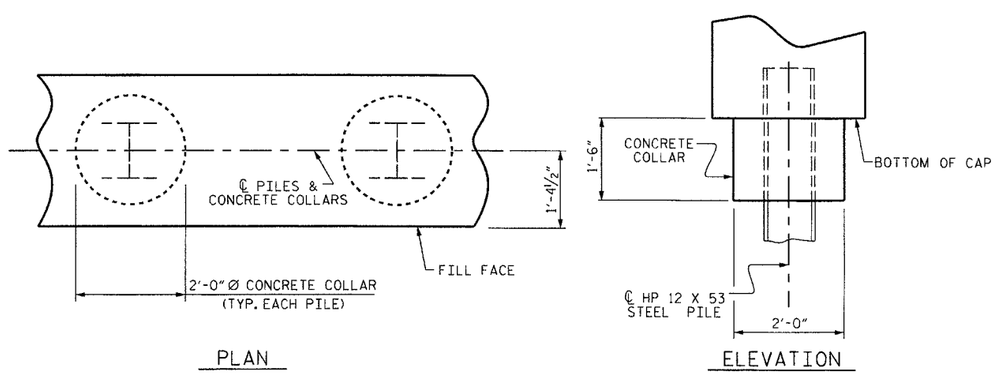

CORROSION PROTECTION FOR STEEL PILES DETAIL

(END BENT No. 1 SHOWN, END BENT No. 2 SIMILAR BY ROTATION)

BAR TYPES

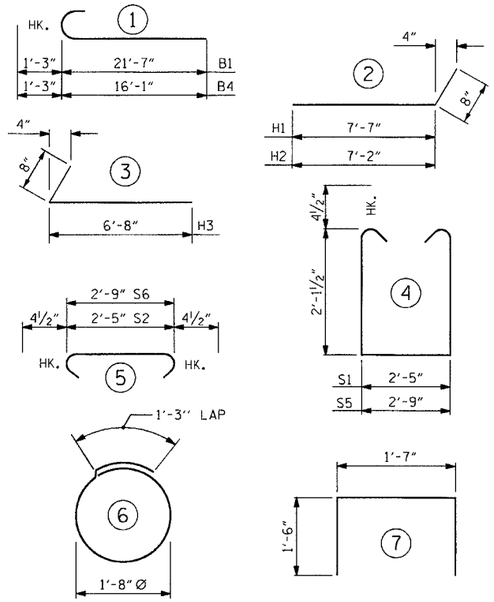

ALL BAR DIMENSIONS ARE OUT TO OUT.

END BENT No. 1	
HP 12 X 53 STEEL PILES	
NO: 5	LIN. FT.= 205
PILE EXCAVATION	
IN SOIL	15 LIN. FT.
NOT IN SOIL	0 LIN. FT.

END BENT No. 2	
HP 12 X 53 STEEL PILES	
NO: 5	LIN. FT.= 165
PILE EXCAVATION	
IN SOIL	40 LIN. FT.
NOT IN SOIL	0 LIN. FT.

BILL OF MATERIAL FOR ONE END BENT

STAGE I

	BAR	NO.	SIZE	TYPE	LENGTH	WEIGHT
	B1	8	#9	1	22'-10"	621
	B2	8	#4	STR	23'-3"	124
	B3	5	#4	STR	2'-5"	8
	D1	10	#6	STR	1'-6"	23
E. BT. #2	H1	6	#4	2	8'-3"	33
	H2	6	#4	2	7'-10"	31
E. BT. #1	H3	12	#4	3	7'-4"	59
E. BT. #1	K1	6	#4	STR	3'-3"	13
E. BT. #2	K2	6	#4	STR	3'-3"	13
	S1	27	#4	4	7'-5"	134
	S2	27	#4	5	3'-2"	57
	S3	6	#4	6	6'-6"	26
	S4	2	#4	7	4'-7"	6
	S5	1	#4	4	7'-9"	5
	S6	1	#4	5	3'-6"	2
E. BT. #1	V1	23	#4	STR	4'-8"	72
E. BT. #2	V2	24	#4	STR	4'-8"	75

E. BT. #1 REINFORCING STEEL 1150 LBS.
E. BT. #2 REINFORCING STEEL 1158 LBS.

CLASS A CONCRETE BREAKDOWN

POUR #1	CAP, LOWER PART OF WINGS & COLLARS	6.4 C.Y.
POUR #2	UPPER PART OF WINGS	0.9 C.Y.
POUR #3	LATERAL GUIDES	0.1 C.Y.
TOTAL CLASS A CONCRETE		7.4 C.Y.

STAGE II

	BAR	NO.	SIZE	TYPE	LENGTH	WEIGHT
	B4	8	#9	1	17'-4"	471
	B5	8	#4	STR	16'-11"	90
	B6	5	#4	STR	2'-5"	8
	D1	8	#6	STR	1'-6"	18
E. BT. #1	H1	6	#4	2	8'-3"	33
	H2	6	#4	2	7'-10"	31
E. BT. #2	H3	12	#4	3	7'-4"	59
E. BT. #2	K1	6	#4	STR	3'-3"	13
E. BT. #1	K2	6	#4	STR	3'-3"	13
	S1	22	#4	4	7'-5"	109
	S2	22	#4	5	3'-2"	47
	S3	4	#4	6	6'-6"	17
	S4	2	#4	7	4'-7"	6
	S5	1	#4	4	7'-9"	5
	S6	1	#4	5	3'-6"	2
E. BT. #2	V1	23	#4	STR	4'-8"	72
E. BT. #1	V2	24	#4	STR	4'-8"	75

E. BT. #1 REINFORCING STEEL 925 LBS.
E. BT. #2 REINFORCING STEEL 917 LBS.

CLASS A CONCRETE BREAKDOWN

POUR #1	CAP, LOWER PART OF WINGS & COLLARS	5.4 C.Y.
POUR #2	UPPER PART OF WINGS	0.9 C.Y.
POUR #3	LATERAL GUIDES	0.1 C.Y.
TOTAL CLASS A CONCRETE		6.4 C.Y.

TOTAL BILL OF MATERIAL

	CLASS A CONCRETE CU. YDS.	REINFORCING STEEL LBS.	HP 12X53 STEEL PILES NO.	HP 12X53 STEEL PILES LIN. FT.	PILE EXCAVATION IN SOIL LIN. FT.
E. BT. #1	13.8	2075	5	205	15
E. BT. #2	13.8	2075	5	165	40
TOTAL	27.6	4150	10	370	55

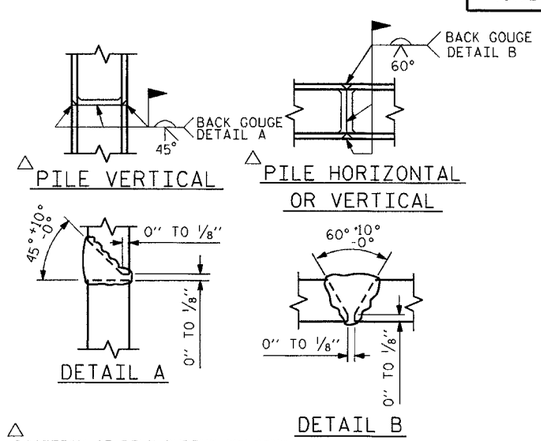

△ POSITION OF PILE DURING WELDING.

PILE SPLICE DETAILS

PROJECT NO. BD-5114M
POLK COUNTY
STATION: 13+35.33 -L-

SHEET 6 OF 6

STATE OF NORTH CAROLINA
DEPARTMENT OF TRANSPORTATION
RALEIGH

SUBSTRUCTURE

END BENT No. 1 & 2 DETAILS

NORTH CAROLINA PROFESSIONAL SEAL 15779 ENGINEER JOHN R. DUGGINS, JR.
3/14/12

REVISIONS						SHEET NO.
NO.	BY:	DATE:	NO.	BY:	DATE:	S-18
1			3			TOTAL SHEETS
2			4			21

ASSEMBLED BY : J.R. MCROY DATE : 10/25/11
CHECKED BY : J.R. DUGGINS DATE : 2/12

14-MAR-2012 11:13
S:\DPG4\John\LIBR.Files\BD-5114M\Final_Plans\BD-5114M_SD_E*.dgn
jduggins

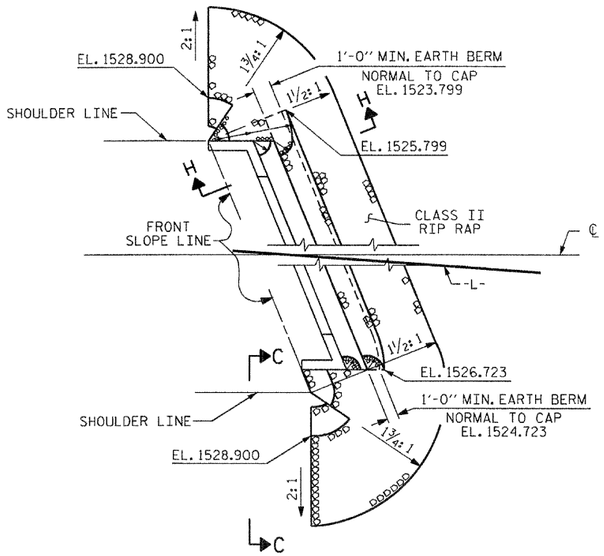

END BENT #1

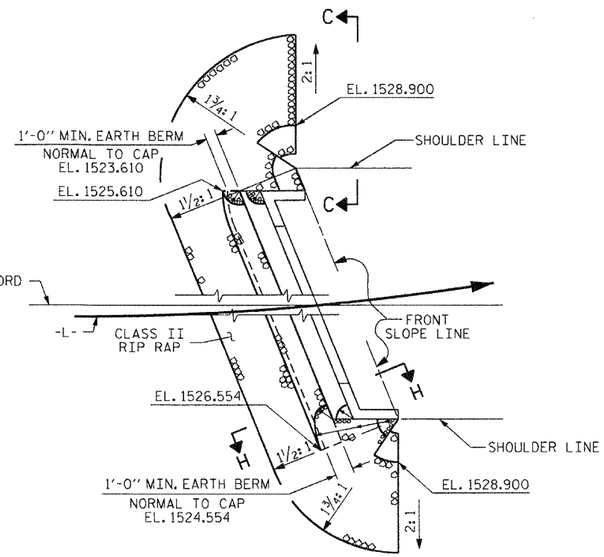

END BENT #2

PLAN

ESTIMATED QUANTITIES		
BRIDGE @ STA. 13+35.33 -L-	RIP RAP CLASS II (2'-0" THICK)	GEOTEXTILE FOR DRAINAGE
	TONS	SQUARE YARDS
END BENT 1	85	95
END BENT 2	80	91

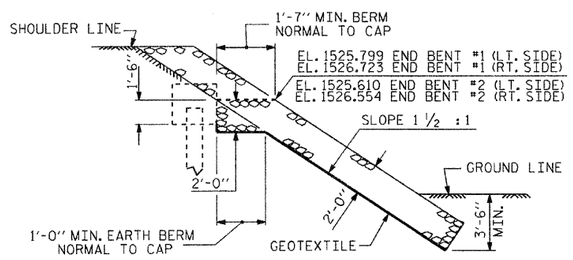

SECTION H-H

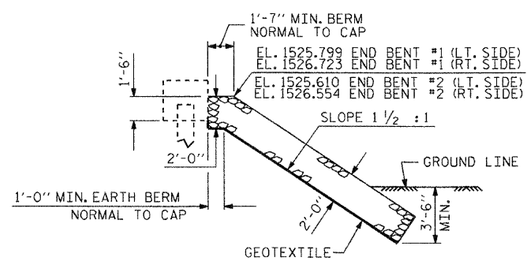

℄ SECTION

BERM RIP RAPPED

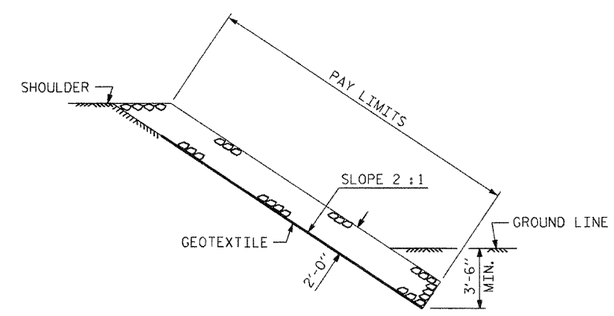

SECTION C-C

PROJECT NO. BD-5114M

POLK COUNTY

STATION: 13+35.33 -L-

STATE OF NORTH CAROLINA
DEPARTMENT OF TRANSPORTATION
RALEIGH

STANDARD

RIP RAP DETAILS

NORTH CAROLINA PROFESSIONAL SEAL 15779 ENGINEER JOHN R. DUGGINS, JR.

3/14/12

ASSEMBLED BY : A. SORSENGINH	DATE : 11/2011	
CHECKED BY : B. MATHEW	DATE : 1/2012	
DRAWN BY : REK 1/84	REV. 10/17/00	RWW/LES
CHECKED BY : RDU 1/84	REV. 5/1/06R	TLA/GM
	REV. 10/1/11	MAA/GM

REVISIONS							SHEET NO.
NO.	BY:	DATE:	NO.	BY:	DATE:		S-19
1			3				TOTAL SHEETS
2			4				21

14-MAR-2012 11:12
S:\DPG4\John\LIBR_Files\BD-5114M\Final_Plans\BD-5114M_SD_RR.dgn
jduggins

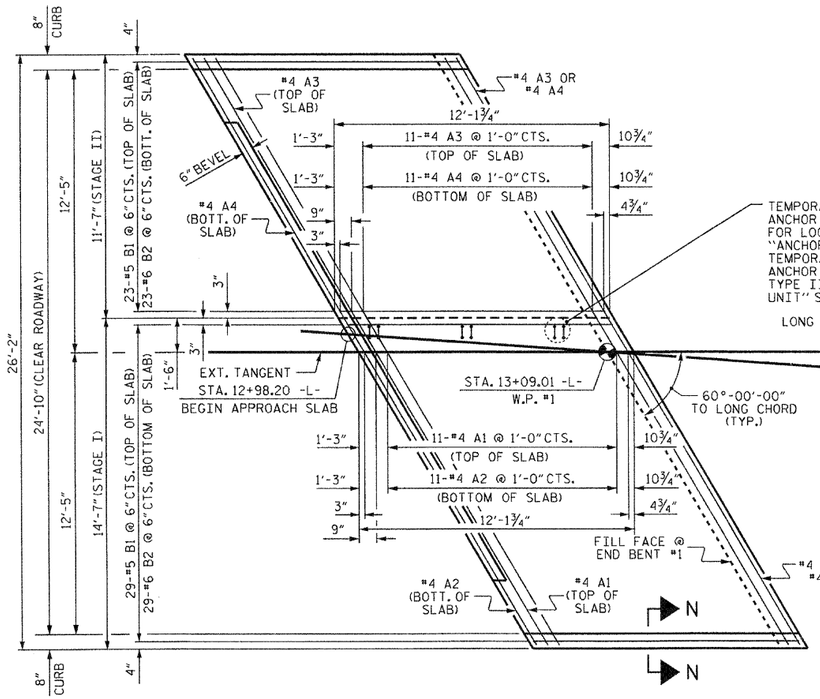

PLAN @ END BENT #1

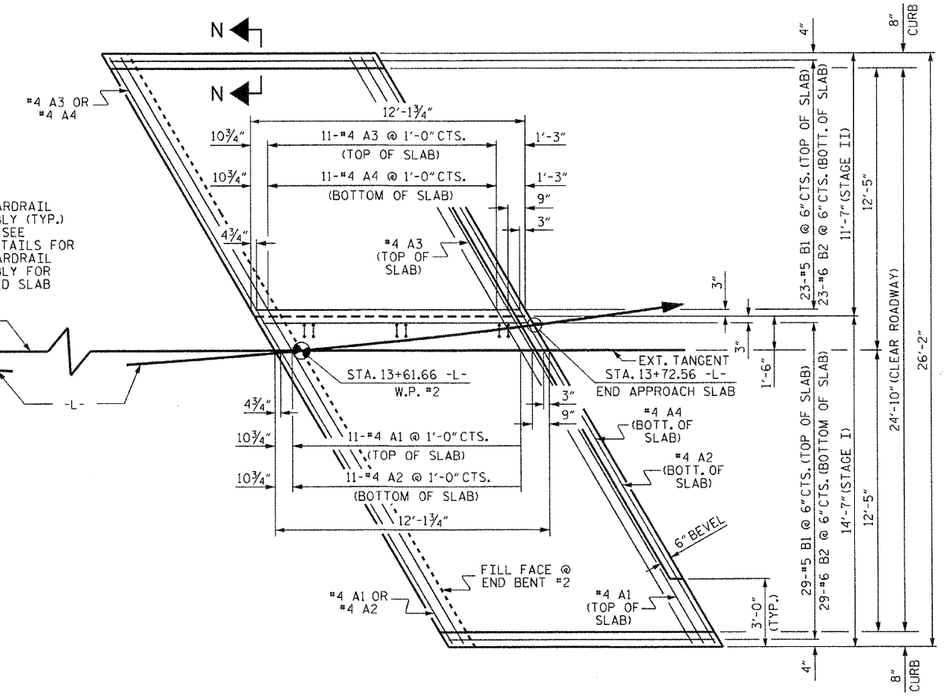

PLAN @ END BENT #2

SPLICE LENGTHS		
BAR SIZE	EPOXY COATED	UNCOATED
#4	2'-0"	1'-9"
#5	2'-6"	2'-2"
#6	3'-10"	2'-7"

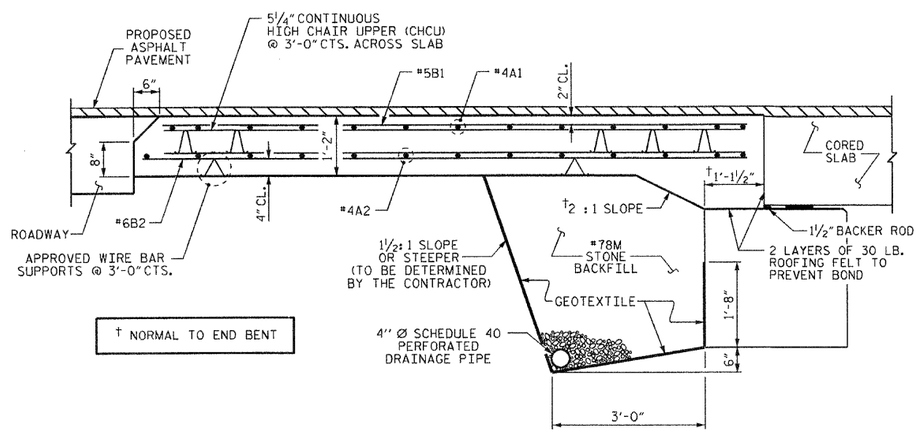

SECTION THRU SLAB

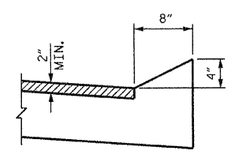

SECTION N-N

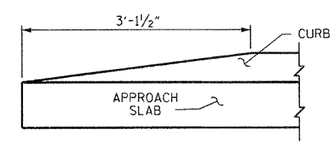

END OF CURB WITHOUT SHOULDER BERM GUTTER

CURB DETAILS

PROJECT NO. BD-5114M
POLK COUNTY
STATION: 13+35.33 -L-

SHEET 1 OF 2

STATE OF NORTH CAROLINA
DEPARTMENT OF TRANSPORTATION
RALEIGH

BRIDGE APPROACH SLAB FOR PRESTRESSED CONCRETE CORED SLAB UNIT (SUB-REGIONAL TIER) 60° SKEW

NORTH CAROLINA PROFESSIONAL SEAL 15779 ENGINEER JOHN R. DUGGINS, P.E.
5/22/12

REVISIONS						SHEET NO.
NO.	BY:	DATE:	NO.	BY:	DATE:	S-20
1			3			TOTAL SHEETS
2			4			21

DRAWN BY : A. SORSENGINH DATE : 11/2011
CHECKED BY : B. MATHEW DATE : 1/2012

22-MAY-2012 15:36
S:\DPG4\John\LIBR_Files\BD-5114M\Final_Plans\BD-5114M_SD_AS.dgn
jduggins

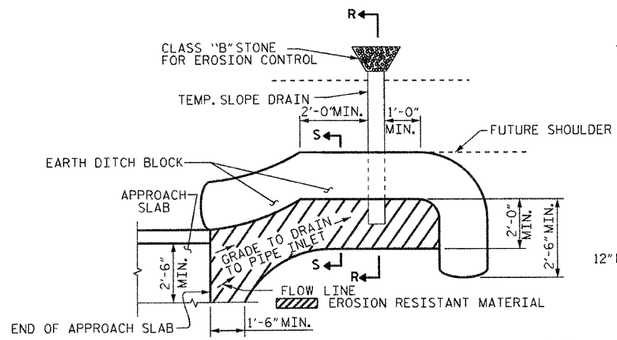

NOTE: IMMEDIATELY AFTER THE CONSTRUCTION OF THE APPROACH SLAB, THE CONTRACTOR SHALL PROVIDE TEMPORARY BERM AND SLOPE DRAIN. CONTRACTOR SHALL GRADE TO PIPE INLET AND PROVIDE EROSION RESISTANT MATERIAL AS SHOWN. THE EROSION RESISTANT MATERIAL SHALL BE EITHER 1) ASPHALT PLANT MIX, TYPE 1 OR TYPE 2, MIN. 2" DEPTH, 2) EROSION CONTROL MAT, OR 3) CONCRETE, AS DIRECTED BY THE ENGINEER. THE SLOPE DRAIN SHALL CONSIST OF A NON-PERFORATED TEMPORARY DRAINAGE PIPE, 12 INCHES IN DIAMETER.

PLAN VIEW

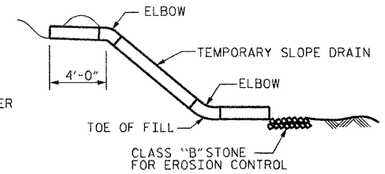

SECTION R-R

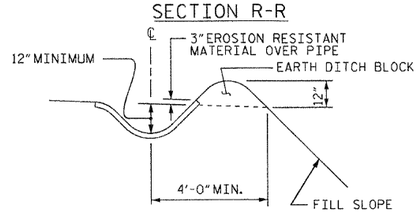

SECTION S-S

TEMPORARY BERM AND SLOPE DRAIN DETAILS

(TO BE USED WHEN SHOULDER BERM GUTTER IS REQUIRED)

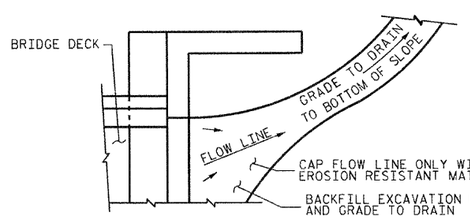

NOTE: IF THE APPROACH SLAB IS NOT CONSTRUCTED IMMEDIATELY AFTER THE BACKFILLING OF THE END BENT EXCAVATION, GRADE TO DRAIN TO THE BOTTOM OF THE SLOPE AND PROVIDE EROSION RESISTANT MATERIAL, SUCH AS FIBERGLASS ROVING OR AS DIRECTED BY THE ENGINEER TO PREVENT SOIL EROSION AND TO PROTECT THE AREA ADJACENT TO THE STRUCTURE. THE CONTRACTOR WILL BE REQUIRED TO REMOVE THESE MATERIALS PRIOR TO CONSTRUCTION OF THE APPROACH SLAB.

TEMPORARY DRAINAGE DETAIL

NOTES

FOR BRIDGE APPROACH FILL INCLUDING GEOTEXTILE, 4"Ø DRAINAGE PIPE, AND #78M STONE BACKFILL, SEE ROADWAY PLANS.

GEOTEXTILE SHALL BE TYPE 1 IN ACCORDANCE WITH THE STANDARD SPECIFICATIONS SECTION 1056.

#78M STONE BACKFILL (CLASS V SELECT MATERIAL) SHALL BE IN ACCORDANCE WITH STANDARD SPECIFICATIONS SECTION 1016.

#78M STONE BACKFILL IS TO BE CONTINUOUS ALONG FILL FACE OF BACKWALL FROM OUTSIDE EDGE TO OUTSIDE EDGE OF APPROACH SLAB.

FOR THE 4"Ø DRAINAGE PIPE OUTLET(S), SEE ROADWAY STANDARD DRAWINGS.

AREA BETWEEN THE WINGWALL AND APPROACH SLAB SHALL BE GRADED TO DRAIN THE WATER AWAY FROM THE FILL FACE OF THE BRIDGE AND SHALL BE PAVED. SEE ROADWAY PLANS.

APPROACH SLAB GROOVING IS NOT REQUIRED.

BILL OF MATERIAL

APPROACH SLAB AT E.BT. 1 STAGE I

BAR	NO.	SIZE	TYPE	LENGTH	WEIGHT
* A1	13	#4	STR	18'-10"	164
A2	13	#4	STR	18'-7"	161
* B1	29	#5	STR	11'-1"	335
B2	29	#6	STR	11'-7"	504
REINFORCING STEEL				LBS.	665
* EPOXY COATED REINFORCING STEEL				LBS.	499
CLASS AA CONCRETE				C. Y.	8.6

APPROACH SLAB AT E.BT. 2 STAGE I

BAR	NO.	SIZE	TYPE	LENGTH	WEIGHT
* A1	13	#4	STR	18'-10"	164
A2	13	#4	STR	18'-7"	161
* B1	29	#5	STR	11'-1"	335
B2	29	#6	STR	11'-7"	504
REINFORCING STEEL				LBS.	665
* EPOXY COATED REINFORCING STEEL				LBS.	499
CLASS AA CONCRETE				C. Y.	8.6

APPROACH SLAB AT E.BT. 1 STAGE II

BAR	NO.	SIZE	TYPE	LENGTH	WEIGHT
* A3	13	#4	STR	13'-1"	114
A4	13	#4	STR	13'-1"	114
* B1	23	#5	STR	11'-1"	266
B2	23	#6	STR	11'-7"	400
REINFORCING STEEL				LBS.	514
* EPOXY COATED REINFORCING STEEL				LBS.	380
CLASS AA CONCRETE				C. Y.	6.8

APPROACH SLAB AT E.BT. 2 STAGE II

BAR	NO.	SIZE	TYPE	LENGTH	WEIGHT
* A3	13	#4	STR	13'-1"	114
A4	13	#4	STR	13'-1"	114
* B1	23	#5	STR	11'-1"	266
B2	23	#6	STR	11'-7"	400
REINFORCING STEEL				LBS.	514
* EPOXY COATED REINFORCING STEEL				LBS.	380
CLASS AA CONCRETE				C. Y.	6.8

* THESE BARS ARE EPOXY COATED

PROJECT NO. BD-5114M

POLK COUNTY

STATION: 13+35.33 -L-

SHEET 2 OF 2

STATE OF NORTH CAROLINA
DEPARTMENT OF TRANSPORTATION
RALEIGH

BRIDGE APPROACH SLAB DETAILS

NORTH CAROLINA PROFESSIONAL SEAL 15779 ENGINEER JOHN R. DUGGINS

3/14/12

REVISIONS							
NO.	BY:	DATE:	NO.	BY:	DATE:		
1			3				
2			4				

SHEET NO. S-21

TOTAL SHEETS 21

DRAWN BY : A. SORSENGINH DATE : 11/2011

CHECKED BY : B. MATHEW DATE : 1/2012

14-MAR-2012 11:10
S:\DPG4\John\LIBR_Files\BD-5114M\Final_Plans\BD-5114M_SD_AS.dgn
jdugglns

STANDARD NOTES

DESIGN DATA:

SPECIFICATIONS	A.A.S.H.T.O. (CURRENT)
LIVE LOAD	SEE PLANS
IMPACT ALLOWANCE	SEE A.A.S.H.T.O.
STRESS IN EXTREME FIBER OF	
STRUCTURAL STEEL - AASHTO M270 GRADE 36	20,000 LBS. PER SQ. IN.
- AASHTO M270 GRADE 50W	27,000 LBS. PER SQ. IN.
- AASHTO M270 GRADE 50	27,000 LBS. PER SQ. IN.
REINFORCING STEEL IN TENSION	
GRADE 60	24,000 LBS. PER SQ. IN.
CONCRETE IN COMPRESSION	1,200 LBS. PER SQ. IN.
CONCRETE IN SHEAR	SEE A.A.S.H.T.O.
STRUCTURAL TIMBER - TREATED OR	
UNTREATED - EXTREME FIBER STRESS	1,800 LBS. PER SQ. IN.
COMPRESSION PERPENDICULAR TO GRAIN OF TIMBER	375 LBS. PER SQ. IN.
EQUIVALENT FLUID PRESSURE OF EARTH	30 LBS. PER CU. FT. (MINIMUM)

MATERIAL AND WORKMANSHIP:

EXCEPT AS MAY OTHERWISE BE SPECIFIED ON PLANS OR IN THE SPECIAL PROVISIONS, ALL MATERIAL AND WORKMANSHIP SHALL BE IN ACCORDANCE WITH THE 2012 "STANDARD SPECIFICATIONS FOR ROADS AND STRUCTURES" OF THE N. C. DEPARTMENT OF TRANSPORTATION.

STEEL SHEET PILING FOR PERMANENT OR TEMPORARY APPLICATIONS SHALL BE HOT ROLLED.

CONCRETE:

UNLESS OTHERWISE REQUIRED ON PLANS, CLASS A CONCRETE SHALL BE USED FOR ALL PORTIONS OF ALL STRUCTURES WITH THE EXCEPTION THAT: CLASS AA CONCRETE SHALL BE USED IN BRIDGE SUPERSTRUCTURES, ABUTMENT BACKWALLS, AND APPROACH SLABS; AND CLASS B CONCRETE SHALL BE USED FOR SLOPE PROTECTION AND RIP RAP.

CONCRETE CHAMFERS:

UNLESS OTHERWISE NOTED ON THE PLANS, ALL EXPOSED CORNERS ON STRUCTURES SHALL BE CHAMFERED 3/4" WITH THE FOLLOWING EXCEPTIONS: TOP CORNERS OF CURBS MAY BE ROUNDED TO 1-1/2" RADIUS WHICH IS BUILT INTO CURB FORMS; CORNERS OF TRANSVERSE FLOOR EXPANSION JOINTS SHALL BE ROUNDED WITH A 1/4" FINISHING TOOL UNLESS OTHERWISE REQUIRED ON PLANS; AND CORNERS OF EXPANSION JOINTS IN THE ROADWAY FACES AND TOPS OF CURBS AND SIDEWALKS SHALL BE ROUNDED TO A 1/4" RADIUS WITH A FINISHING STONE OR TOOL UNLESS OTHERWISE REQUIRED ON PLANS.

DOWELS:

DOWELS WHEN INDICATED ON PLANS AS FOR CULVERT EXTENSIONS, SHALL BE EMBEDDED AT LEAST 12" INTO THE OLD CONCRETE AND GROUTED INTO PLACE WITH 1:2 CEMENT MORTAR.

ALLOWANCE FOR DEAD LOAD DEFLECTION, SETTLEMENT, ETC. IN CASTING SUPERSTRUCTURES:

BRIDGES SHALL BE BUILT ON THE GRADE OR VERTICAL CURVE SHOWN ON PLANS. SLABS, CURBS AND PARAPETS SHALL CONFORM TO THE GRADE OR CURVE.

ALL DIMENSIONS WHICH ARE GIVEN IN SECTION AND ARE AFFECTED BY DEAD LOAD DEFLECTIONS ARE DIMENSIONS AT CENTER LINE OF BEARING UNLESS OTHERWISE NOTED ON PLANS. IN SETTING FORMS FOR STEEL BEAM BRIDGES AND PRESTRESSED CONCRETE GIRDER BRIDGES, ADJUSTMENTS SHALL BE MADE DUE TO THE DEAD LOAD DEFLECTIONS FOR THE ELEVATIONS SHOWN. WHERE BLOCKS ARE SHOWN OVER BEAMS FOR BUILDING UP TO THE SLAB, THE VERTICAL DIMENSIONS OF THE BLOCKS SHALL BE ADJUSTED BETWEEN BEARINGS TO COMPENSATE FOR DEAD LOAD DEFLECTIONS, VERTICAL CURVE ORDINATE, AND ACTUAL BEAM CAMBER. WHERE BOTTOM OF SLAB IS IN LINE WITH BOTTOM OF TOP FLANGES, DEPTH OF SLAB BETWEEN BEARINGS SHALL BE ADJUSTED TO COMPENSATE FOR DEAD LOAD DEFLECTION, VERTICAL CURVE ORDINATE, AND ACTUAL BEAM CAMBER.

IN SETTING FALSEWORK AND FORMS FOR REINFORCED CONCRETE SPANS, AN ALLOWANCE SHALL BE MADE FOR DEAD LOAD DEFLECTIONS, SETTLEMENT OF FALSEWORK, AND PERMANENT CAMBER WHICH SHALL BE PROVIDED FOR IN ADDITION TO THE ELEVATIONS SHOWN. AFTER REMOVAL OF THE FALSEWORK, THE FINISHED STRUCTURES SHALL CONFORM TO THE PROFILE AND ELEVATIONS SHOWN ON THE PLANS AND CONSTRUCTION ELEVATIONS FURNISHED BY THE ENGINEER.

DETAILED DRAWINGS FOR FALSEWORK OR FORMS FOR BRIDGE SUPERSTRUCTURE AND ANY STRUCTURE OR PARTS OF A STRUCTURE AS NOTED ON THE PLANS SHALL BE SUBMITTED TO THE ENGINEER FOR APPROVAL BEFORE CONSTRUCTION OF THE FALSEWORK OR FORMS IS STARTED.

REINFORCING STEEL:

ALL REINFORCING STEEL SHALL BE DEFORMED. DIMENSIONS RELATIVE TO PLACEMENT OF REINFORCING ARE TO CENTERS OF BARS UNLESS OTHERWISE INDICATED IN THE PLANS. DIMENSIONS ON BAR DETAILS ARE TO CENTERS OF BARS OR ARE OUT TO OUT AS INDICATED ON PLANS.

WIRE BAR SUPPORTS SHALL BE PROVIDED FOR REINFORCING STEEL WHERE INDICATED ON THE PLANS. WHEN BAR SUPPORT PIECES ARE PLACED IN CONTINUOUS LINES, THEY SHALL BE SO PLACED THAT THE ENDS OF THE SUPPORTING WIRES SHALL BE LAPPED TO LOCK LEGS ON ADJOINING PIECES.

STRUCTURAL STEEL:

AT THE CONTRACTOR'S OPTION, HE MAY SUBSTITUTE 7/8" Ø SHEAR STUDS FOR THE 3/4" Ø STUDS SPECIFIED ON THE PLANS. THIS SUBSTITUTION SHALL BE MADE AT THE RATE OF 3 - 7/8" Ø STUDS FOR 4 - 3/4" Ø STUDS, AND STUD SPACING CHANGES SHALL BE MADE AS NECESSARY TO PROVIDE THE SAME EQUIVALENT NUMBER OF 7/8" Ø STUDS ALONG THE BEAM AS SHOWN FOR 3/4" Ø STUDS BASED ON THE RATIO OF 3 - 7/8" Ø STUDS FOR 4 - 3/4" Ø STUDS. STUDS OF THE LENGTH SPECIFIED ON THE PLANS MUST BE PROVIDED. THE MAXIMUM SPACING SHALL BE 2'-0".

EXCEPT AT THE INTERIOR SUPPORTS OF CONTINUOUS BEAMS WHERE THE COVER PLATE IS IN CONTACT WITH BEARING PLATE, THE CONTRACTOR MAY, AT HIS OPTION, SUBSTITUTE FOR THE COVER PLATES DESIGNATED ON THE PLANS COVER PLATES OF THE EQUIVALENT AREA PROVIDED THESE PLATES ARE AT LEAST 5/16" IN THICKNESS AND DO NOT EXCEED A WIDTH EQUAL TO THE FLANGE WIDTH LESS 2" OR A THICKNESS EQUAL TO 2 TIMES THE FLANGE THICKNESS. THE SIZE OF FILLET WELDS SHALL CONFORM TO THE REQUIREMENTS OF THE CURRENT ANSI/AASHTO/AWS "BRIDGE WELDING CODE". ELECTROSLAG WELDING WILL NOT BE PERMITTED.

WITH THE SOLE EXCEPTION OF EDGES AT SURFACES WHICH BEAR ON OTHER SURFACES, ALL SHARP EDGES AND ENDS OF SHAPES AND PLATES SHALL BE SLIGHTLY ROUNDED BY SUITABLE MEANS TO A RADIUS OF APPROXIMATELY 1/16 INCH OR EQUIVALENT FLAT SURFACE AT A SUITABLE ANGLE PRIOR TO PAINTING, GALVANIZING, OR METALLIZING.

HANDRAILS AND POSTS:

METAL STANDARDS AND FACES OF THE CONCRETE END POSTS FOR THE METAL RAIL SHALL BE SET NORMAL TO THE GRADE OF THE CURB, UNLESS OTHERWISE SHOWN ON PLANS. THE METAL RAIL AND TOPS OF CONCRETE POSTS USED WITH THE ALUMINUM RAIL SHALL BE BUILT PARALLEL TO THE GRADE OF THE CURB.

METAL HANDRAILS SHALL BE IN ACCORDANCE WITH THE PLANS. RAILS SHALL BE AS MANUFACTURED FOR BRIDGE RAILING. CASTINGS SHALL BE OF A UNIFORM APPEARANCE. FINS AND OTHER DEFORMATIONS RESULTING FROM CASTING OR OTHERWISE SHALL BE REMOVED IN A MANNER SO THAT A UNIFORM COLORING OF THE COMPLETED CASTING SHALL BE OBTAINED. CASTINGS WITH DISCOLORATIONS OR OF NON-UNIFORM COLORING WILL NOT BE ACCEPTED. CERTIFIED MILL REPORTS ARE REQUIRED FOR METAL RAILS AND POSTS.

SPECIAL NOTES:

GENERALLY, IN CASE OF DISCREPANCY, THIS STANDARD SHEET OF NOTES SHALL GOVERN OVER THE SPECIFICATIONS, BUT THE REMAINDER OF THE PLANS SHALL GOVERN OVER NOTES HEREON, AND SPECIAL PROVISIONS SHALL GOVERN OVER ALL. SEE SPECIFICATIONS ARTICLE 105-4.

ENGLISH

JANUARY, 1990