STATE	STATE PROJECT REFERENCE NO.	SHEET NO.	TOTAL SHEETS
N.C.	BD-5114V	1	

STATE PROJ. NO.	F.A. PROJ. NO.	DESCRIPTION
45360.1.22	BRZ-1356(2)	P.E.
45360.2.22	BRZ-1356(2)	R/W
45360.3.22	BRZ-1356(2)	CONST.

STATE OF NORTH CAROLINA
DIVISION OF HIGHWAYS

POLK COUNTY

LOCATION: BRIDGE NO. 89 OVER HENSONS CREEK ON SR 1356 (LEE CUDD RD.)

TYPE OF WORK: GRADING, DRAINAGE, PAVING, AND STRUCTURE

TIP PROJECT: BD-5114V

CONTRACT: DN00089

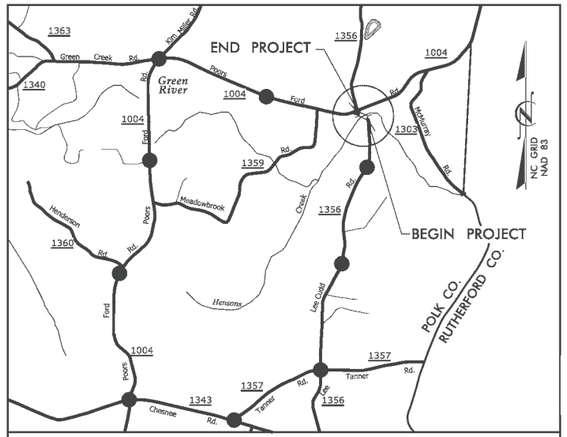

VICINITY MAP

DETOUR ROUTE

4

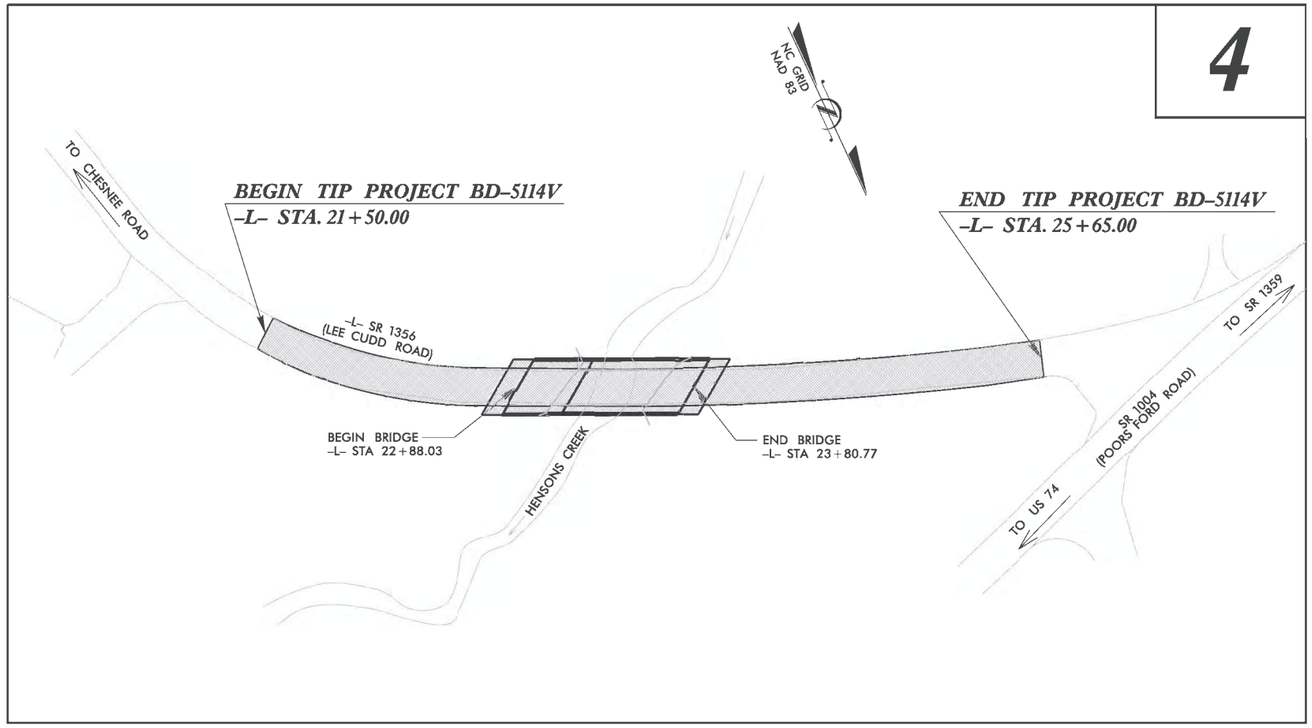

Vaughn & Melton
Consulting Engineers
Asheville, North Carolina 828-253-2796
Charlotte, North Carolina 704-357-0488
Tri-Cities, Tennessee 423-467-8401
Knoxville, Tennessee 865-546-5800
Middlesboro, Kentucky 606-248-6600
Spartanburg, South Carolina 864-574-4775

Copyright © 2006 Vaughn & Melton, Inc. All Rights Reserved

GRAPHIC SCALES

20 10 0 20 40 — PLANS

20 10 0 20 40 — PROFILE (HORIZONTAL)

5 2.5 0 5 10 — PROFILE (VERTICAL)

DESIGN DATA

ADT 2008 = 290
ADT 2025 = 580

T = 6 %
V = 35 MPH

FUNC CLASS = LOCAL

PROJECT LENGTH

LENGTH ROADWAY TIP PROJECT BD-5114V = 0.061 MI.
LENGTH STRUCTURE TIP PROJECT BD-5114V = 0.018 MI.
TOTAL LENGTH OF TIP PROJECT BD-5114V = 0.079 MI.

Prepared In the Office of:
VAUGHN & MELTON
1318-F PATTON AVE.
ASHEVILLE NC, 28806
FOR THE NORTH CAROLINA DIVISION OF HIGHWAYS

2012 STANDARD SPECIFICATIONS

RIGHT OF WAY DATE: OCTOBER 21, 2011

LETTING DATE: JULY 24, 2012

REECE SCHULER, PE
PROJECT ENGINEER

AARON CARVER, PE
PROJECT DESIGN ENGINEER

NCDOT CONTACT:
JOSH DEYTON, PE
DIVISION 14 - BRIDGE MANAGER

HYDRAULICS ENGINEER

NORTH CAROLINA PROFESSIONAL SEAL 033023 ENGINEER BRADLEY S. RIDNOUR

6/21/12
Bradley S Ridnour, PE P.E.
SIGNATURE:

ROADWAY DESIGN ENGINEER

NORTH CAROLINA PROFESSIONAL SEAL 26960 ENGINEER REECE M. SCHULER

6/21/12
P.E.
SIGNATURE:

DIVISION OF HIGHWAYS STATE OF NORTH CAROLINA

PREPARED - STATE OF NORTH CAROLINA - DEPARTMENT OF TRANSPORTATION

$$$$$SYSTVE$$$$$
$$$$$US$$$$$DCN$$$$$$$$$$$$$$$$$$
$$$$$US RKAMT$$$$

PROJECT REFERENCE NO.	SHEET NO.
BD-5114V	1-A

ROADWAY DESIGN ENGINEER

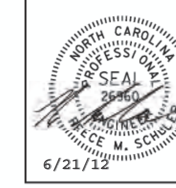

INDEX OF SHEETS

SHEET NUMBER	SHEET
1	TITLE SHEET
1-A	INDEX OF SHEETS, GENERAL NOTES, AND LIST OF STANDARD DRAWINGS
1-B	CONVENTIONAL SYMBOLS
1-C	SURVEY CONTROL SHEET
2	PAVEMENT SCHEDULE, TYPICAL SECTIONS, AND WEDGING DETAILS
3	SUMMARY OF QUANTITIES
3A	SUMMARY OF DRAINAGE QUANTITIES, SUMMARY OF GUARDRAIL, AND ASPHALT PAVEMENT REMOVAL SUMMARY
3B	EARTHWORK SUMMARY
4	PLAN AND PROFILE SHEET
TMP-1 THRU TMP-2	TRAFFIC MANAGEMENT PLANS
EC-1 THRU EC-2	EROSION CONTROL PLANS
UO-1 THRU UO-2	UTILITIES BY OTHERS
X-0	CROSS-SECTION SUMMARY
X-1 THRU X-4	CROSS-SECTIONS
S-1 THRU S-23	STRUCTURE PLANS

GENERAL NOTES:

2012 SPECIFICATIONS
EFFECTIVE: 01-17-12

GRADE LINE:
GRADING AND SURFACING OR RESURFACING AND WIDENING:

THE GRADE LINES SHOWN DENOTE THE FINISHED ELEVATION OF THE PROPOSED SURFACING AT GRADE POINTS SHOWN ON THE TYPICAL SECTIONS. WHERE NO GRADE LINES ARE SHOWN, THE PROFILES SHOWN DENOTE THE TOP ELEVATION OF THE EXISTING PAVEMENT ALONG THE CENTER LINE OF SURVEY ON WHICH THE PROPOSED RESURFACING WILL BE PLACED. GRADE LINES MAY BE ADJUSTED BY THE ENGINEER IN ORDER TO SECURE A PROPER TIE-IN.

CLEARING:

CLEARING ON THIS PROJECT SHALL BE PERFORMED TO THE LIMITS ESTABLISHED BY METHOD II.

SUPERELEVATION:

ALL CURVES ON THIS PROJECT SHALL BE SUPERELEVATED IN ACCORDANCE WITH STD. NO. 225.04 USING THE RATE OF SUPERELEVATION AND RUNOFF SHOWN ON THE PLANS. SUPERELEVATION IS TO BE REVOLVED ABOUT THE GRADE POINTS SHOWN ON THE TYPICAL SECTIONS.

SHOULDER CONSTRUCTION:

ASPHALT, EARTH, AND CONCRETE SHOULDER CONSTRUCTION ON THE HIGH SIDE OF SUPERELEVATED CURVES SHALL BE IN ACCORDANCE WITH STD. NO. 560.01.

UNDERDRAINS:

UNDERDRAINS SHALL BE CONSTRUCTED IN ACCORDANCE WITH STD. NO. 815.03 AT LOCATIONS DIRECTED BY THE ENGINEER.

GUARDRAIL:

THE GUARDRAIL LOCATIONS SHOWN ON THE PLANS MAY BE ADJUSTED DURING CONSTRUCTION AS DIRECTED BY THE ENGINEER. THE CONTRACTOR SHOULD CONSULT WITH THE ENGINEER PRIOR TO ORDERING GUARDRAIL MATERIAL.

TEMPORARY SHORING:

SHORING REQUIRED FOR THE MAINTENANCE OF TRAFFIC WILL BE PAID FOR AS "EXTRA WORK" IN ACCORDANCE WITH SECTION 104-7.

SUBSURFACE PLANS:

NO SUBSURFACE PLANS ARE AVAILABLE ON THIS PROJECT. THE CONTRACTOR SHOULD MAKE HIS OWN INVESTIGATION AS TO THE SUBSURFACE CONDITIONS.

END BENTS:

THE ENGINEER SHALL CHECK THE STRUCTURE END BENT PLANS, DETAILS, AND CROSS-SECTION PRIOR TO SETTING OF THE SLOPE STAKES FOR THE EMBANKMENT OR EXCAVATION APPROACHING A BRIDGE.

UTILITIES:

UTILITY OWNERS ON THIS PROJECT ARE RUTHERFORD EMC AND WINDSTREAM COMMUNICATIONS.

RIGHT-OF-WAY MARKERS:

ALL RIGHT-OF-WAY MARKERS ON THIS PROJECT SHALL BE PLACED BY OTHERS.

2012 ROADWAY ENGLISH STANDARD DRAWINGS

The following Roadway Standards as appear in "Roadway Standard Drawings" Highway Design Branch - N. C. Department of Transportation - Raleigh, N. C., Dated January 17, 2012 are applicable to this project and by reference hereby are considered a part of these plans:

STD.NO.	TITLE
DIVISION 2 - EARTHWORK	
200.02	Method of Clearing - Method II
225.02	Guide for Grading Subgrade - Secondary and Local
225.04	Method of Obtaining Superelevation - Two Lane Pavement
DIVISION 3 - PIPE CULVERTS	
300.01	Method of Pipe Installation - Method 'A'
DIVISION 4 - MAJOR STRUCTURES	
422.11	Bridge Approach Fills
DIVISION 5 - SUBGRADE, BASES AND SHOULDERS	
560.01	Method of Shoulder Construction - High Side of Superelevated Curve - Method I
DIVISION 8 - INCIDENTALS	
815.03	Pipe Underdrain and Blind Drain
840.25	Anchorage for Frames
840.29	Frames and Narrow Slot Flat Grates
840.36	Traffic Bearing Grated Drop Inlet - for Steel Frame and Grates
840.37	Steel Grate and Frame
840.46	Traffic Bearing Precast Drainage Structure
840.66	Drainage Structure Steps
846.01	Concrete Curb, Gutter and Curb & Gutter
846.04	Drop Inlet Installation in Shoulder Berm Gutter
862.01	Guardrail Placement
862.02	Guardrail Installation
862.03	Structure Anchor Units
876.02	Guide for Rip Rap at Pipe Outlets

PROJECT REFERENCE NO.	SHEET NO.
BD-5114V	1-B

Note: Not to Scale

S.U.E. = Subsurface Utility Engineering

STATE OF NORTH CAROLINA
DIVISION OF HIGHWAYS

CONVENTIONAL PLAN SHEET SYMBOLS

BOUNDARIES AND PROPERTY:

- State Line
- County Line
- Township Line
- City Line
- Reservation Line
- Property Line
- Existing Iron Pin — EIP
- Property Corner
- Property Monument — ECM
- Parcel/Sequence Number — 123
- Existing Fence Line
- Proposed Woven Wire Fence
- Proposed Chain Link Fence
- Proposed Barbed Wire Fence
- Existing Wetland Boundary — WLB
- Proposed Wetland Boundary — WLB
- Existing Endangered Animal Boundary — EAB
- Existing Endangered Plant Boundary — EPB

BUILDINGS AND OTHER CULTURE:

- Gas Pump Vent or U/G Tank Cap
- Sign — S
- Well — W
- Small Mine
- Foundation
- Area Outline
- Cemetery
- Building
- School
- Church
- Dam

HYDROLOGY:

- Stream or Body of Water
- Hydro, Pool or Reservoir
- Jurisdictional Stream — JS
- Buffer Zone 1 — BZ 1
- Buffer Zone 2 — BZ 2
- Flow Arrow
- Disappearing Stream
- Spring
- Swamp Marsh
- Proposed Lateral, Tail, Head Ditch — FLOW
- False Sump

RAILROADS:

- Standard Gauge — CSX TRANSPORTATION
- RR Signal Milepost — MILEPOST 35
- Switch — SWITCH
- RR Abandoned
- RR Dismantled

RIGHT OF WAY:

- Baseline Control Point
- Existing Right of Way Marker
- Existing Right of Way Line
- Proposed Right of Way Line — RW
- Proposed Right of Way Line with Iron Pin and Cap Marker — RW
- Proposed Right of Way Line with Concrete or Granite Marker — RW
- Existing Control of Access — CA
- Proposed Control of Access — CA
- Existing Easement Line — E
- Proposed Temporary Construction Easement — E
- Proposed Temporary Drainage Easement — TDE
- Proposed Permanent Drainage Easement — PDE
- Proposed Permanent Utility Easement — PUE

ROADS AND RELATED FEATURES:

- Existing Edge of Pavement
- Existing Curb
- Proposed Slope Stakes Cut — C
- Proposed Slope Stakes Fill — F
- Proposed Wheel Chair Ramp — WCR
- Proposed Wheel Chair Ramp Curb Cut — WCC
- Curb Cut for Future Wheel Chair Ramp — CCFR
- Existing Metal Guardrail
- Proposed Guardrail
- Existing Cable Guiderail
- Proposed Cable Guiderail
- Equality Symbol
- Pavement Removal

VEGETATION:

- Single Tree
- Single Shrub
- Hedge
- Woods Line
- Orchard
- Vineyard — Vineyard

EXISTING STRUCTURES:

MAJOR:

- Bridge, Tunnel or Box Culvert — CONC
- Bridge Wing Wall, Head Wall and End Wall — CONC WW

MINOR:

- Head and End Wall — CONC HW
- Pipe Culvert
- Footbridge
- Drainage Box: Catch Basin, DI or JB — CB
- Paved Ditch Gutter
- Storm Sewer Manhole — S
- Storm Sewer — S

UTILITIES:

POWER:

- Existing Power Pole
- Proposed Power Pole
- Existing Joint Use Pole
- Proposed Joint Use Pole
- Power Manhole — P
- Power Line Tower
- Power Transformer
- U/G Power Cable Hand Hole — HH
- H-Frame Pole
- Recorded U/G Power Line — P
- Designated U/G Power Line (S.U.E.*) — P

TELEPHONE:

- Existing Telephone Pole
- Proposed Telephone Pole
- Telephone Manhole — T
- Telephone Booth
- Telephone Pedestal — T
- Telephone Cell Tower
- U/G Telephone Cable Hand Hole — HH
- Recorded U/G Telephone Cable — T
- Designated U/G Telephone Cable (S.U.E.*) — T
- Recorded U/G Telephone Conduit — TC
- Designated U/G Telephone Conduit (S.U.E.*) — TC
- Recorded U/G Fiber Optics Cable — T FO
- Designated U/G Fiber Optics Cable (S.U.E.*) — T FO

WATER:

- Water Manhole — W
- Water Meter
- Water Valve
- Water Hydrant
- Recorded U/G Water Line — W
- Designated U/G Water Line (S.U.E.*) — W
- Above Ground Water Line — A/G Water

TV:

- TV Satellite Dish
- TV Pedestal — C
- TV Tower
- U/G TV Cable Hand Hole — HH
- Recorded U/G TV Cable — TV
- Designated U/G TV Cable (S.U.E.*) — TV
- Recorded U/G Fiber Optic Cable — TV FO
- Designated U/G Fiber Optic Cable (S.U.E.*) — TV FO

GAS:

- Gas Valve
- Gas Meter
- Recorded U/G Gas Line — G
- Designated U/G Gas Line (S.U.E.*) — G
- Above Ground Gas Line — A/G Gas

SANITARY SEWER:

- Sanitary Sewer Manhole
- Sanitary Sewer Cleanout
- U/G Sanitary Sewer Line — SS
- Above Ground Sanitary Sewer — A/G Sanitary Sewer
- Recorded SS Forced Main Line — FSS
- Designated SS Forced Main Line (S.U.E.*) — FSS

MISCELLANEOUS:

- Utility Pole
- Utility Pole with Base
- Utility Located Object
- Utility Traffic Signal Box — S
- Utility Unknown U/G Line — ?UTL
- U/G Tank; Water, Gas, Oil
- A/G Tank; Water, Gas, Oil
- U/G Test Hole (S.U.E.*)
- Abandoned According to Utility Records — AATUR
- End of Information — E.O.I.

PROJECT REFERENCE NO.	SHEET NO.
BD-5114V	1-C
Location and Surveys	

SURVEY CONTROL SHEET BD-5114V

BL

POINT	DESC.	NORTH	EAST	ELEVATION	L STATION	OFFSET
1	BL-1	554809.3750	1111050.5860	863.39	OUTSIDE PROJECT LIMITS	
2	BL-2	554764.0130	1111294.9870	855.20	23+65.06	13.26 RT
3	BL-3	554624.7030	1111509.2990	865.96	21+13.53	15.92 RT

****
BM1 ELEVATION = 859.62
N 554700 E 1111463
L STATION 21+94.00 31 RIGHT
RR SPIKE IN BASE OF PP
****

FINAL PROPOSED RIGHT OF WAY MONUMENT PSD

ALIGN	STATION	OFFSET	NORTH	EAST
L	21+45.00	-13.0000	554633.6228	1111467.4158
L	21+45.00	13.0000	554650.0547	1111487.5651
L	21+80.00	30.0000	554689.3470	1111473.9231
L	22+00.00	-45.0000	554644.9461	1111410.5139
L	22+50.00	-45.0000	554666.9193	1111375.9801
L	22+50.00	55.0000	554756.2265	1111420.9715
L	24+25.00	55.0000	554824.3853	1111252.2417
L	24+50.00	-50.0000	554733.2660	1111194.3758
L	25+65.00	-13.0000	554801.5068	1111096.7636
L	25+65.00	13.0000	554826.5295	1111103.8252

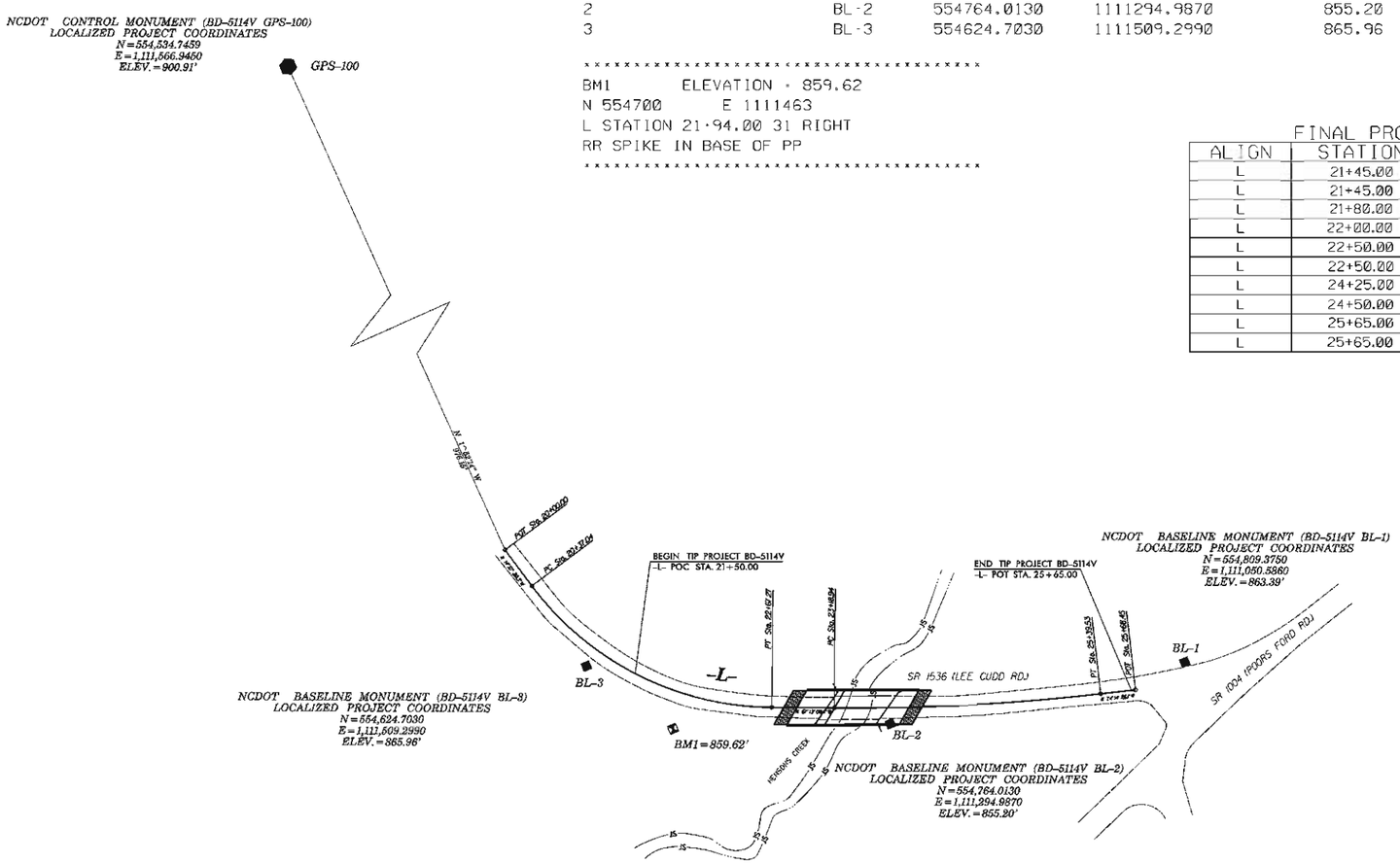

FINAL -L-

TYPE	STATION	NORTH	EAST
POT	20+00.00	554510.3770	1111535.0800
PC	20+37.04	554546.2472	1111525.8329
PT	22+67.27	554714.3376	1111380.5499
PC	23+18.94	554734.3476	1111332.9037
PT	25+39.53	554807.1009	1111124.8056
POT	25+68.45	554814.9543	1111096.9772

DATUM DESCRIPTION

THE LOCALIZED COORDINATE SYSTEM DEVELOPED FOR THIS PROJECT IS BASED ON THE STATE PLANE COORDINATES ESTABLISHED BY NCDOT FOR MONUMENT "GPS-100"
WITH NAD 83/NSRS 2007 STATE PLANE GRID COORDINATES OF
NORTHING: 553534.746(ft) EASTING: 1111566.945(ft)
ELEVATION: 900.91(ft)
THE AVERAGE COMBINED GRID FACTOR USED ON THIS PROJECT (GROUND TO GRID) IS: 0.999835384
THE N.C. LAMBERT GRID BEARING AND LOCALIZED HORIZONTAL GROUND DISTANCE FROM "GPS-100" TO -L- STATION 20+00.00 IS
N01°52'14"W 976.15'
ALL LINEAR DIMENSIONS ARE LOCALIZED HORIZONTAL DISTANCES
VERTICAL DATUM USED IS NAVD 88

NOTES:

1. *THE CONTROL DATA FOR THIS PROJECT CAN BE FOUND ELECTRONICALLY BY SELECTING PROJECT CONTROL DATA AT:*
   HTTP://WWW.NCDOT.ORG/DOH/PRECONSTRUCT/HIGHWAY/LOCATION/PROJECT/

   THE FILES TO BE FOUND ARE AS FOLLOWS:
   BD-5114V_LS_CONTROL_120502.TXT

   SITE CALIBRATION INFORMATION HAS NOT BEEN PROVIDED FOR THIS PROJECT. IF FURTHER INFORMATION IS NEEDED, PLEASE CONTACT THE LOCATION AND SURVEYS UNIT.

■ *INDICATES GEODETIC CONTROL MONUMENTS USED OR SET FOR HORIZONTAL PROJECT CONTROL BY THE NCDOT LOCATION AND SURVEYS UNIT.*
PROJECT CONTROL ESTABLISHED USING GLOBAL POSITIONING SYSTEM.
NETWORK ESTABLISHED FROM NGS ONLINE POSITIONING SERVICE (OPUS)

NOTE: DRAWING NOT TO SCALE

PROJECT REFERENCE NO.	SHEET NO.
BD-5114V	2
R/W SHEET NO.	
ROADWAY DESIGN ENGINEER	PAVEMENT DESIGN ENGINEER

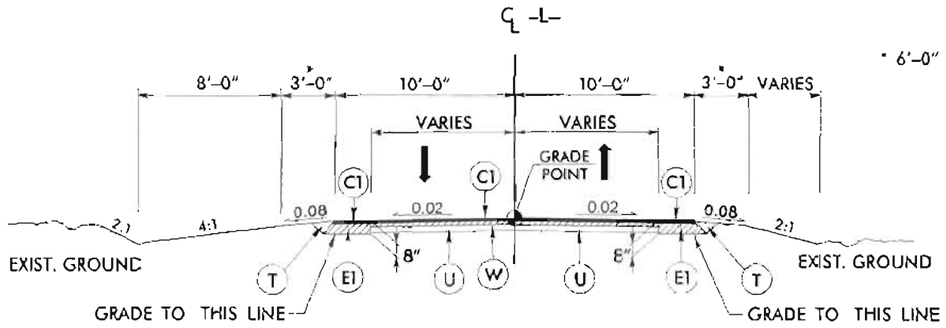

* 6'-0" WITH GUARDRAIL

TYPICAL SECTION NO. 1

USE TYPICAL SECTION NO. 1

-L- STA. 21+50.00 (BEGIN PROJECT) TO STA. 22+00.00 (END WEDGING)
-L- STA. 25+10.00 (BEGIN WEDGING) TO STA. 25+65.00 (END PROJECT)

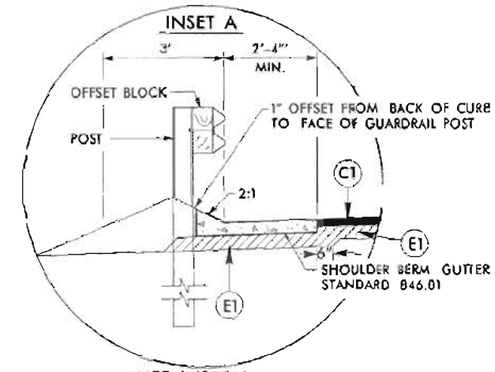

USE INSET A

END BRIDGE LT TO -L- STA. 24+11

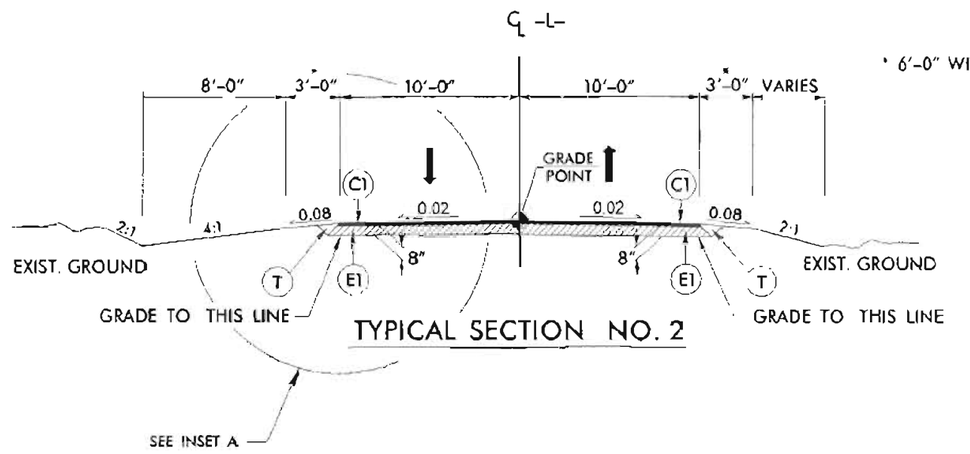

* 6'-0" WITH GUARDRAIL

TYPICAL SECTION NO. 2

USE TYPICAL SECTION NO. 2

-L- STA. 22+00.00 (BEGIN FULL DEPTH) TO 22+88.03 (BEGIN BRIDGE)
-L- STA. 23+80.77 (END BRIDGE) TO STA. 25+10.00 (END FULL DEPTH)

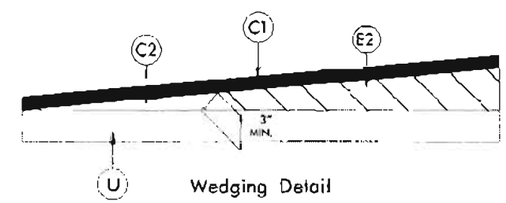

Wedging Detail

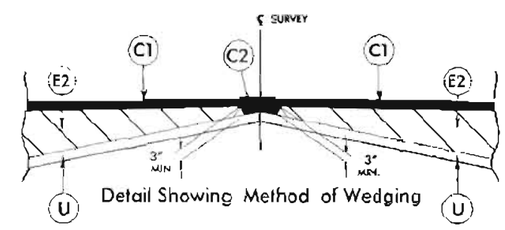

Detail Showing Method of Wedging

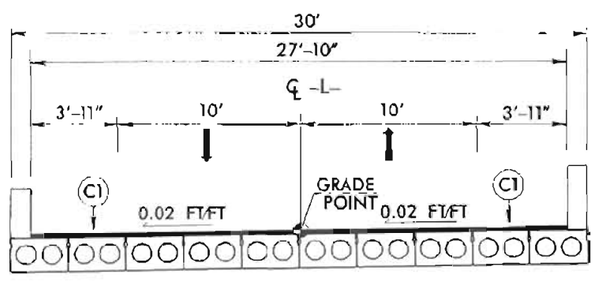

TYPICAL SECTION NO. 3

USE TYPICAL SECTION NO. 3

-L- STA. 22+88.03 (BEGIN BRIDGE) TO
-L- STA. 23+80.77 (END BRIDGE)

	PAVEMENT SCHEDULE
C1	PROP. APPROX. 3" ASPHALT CONCRETE SURFACE COURSE, TYPE S9.5B, AT AN AVERAGE RATE OF 188 LBS. PER SQ. YD. IN EACH OF TWO LAYERS.
C2	PROP. VAR. DEPTH ASPHALT CONCRETE SURFACE COURSE, TYPE S9.5B AT AN AVERAGE RATE OF 112 LBS. PER SQ. YD. PER 1" DEPTH. TO BE PLACED IN LAYERS NOT TO EXCEED 1½" IN DEPTH.
E1	PROP. APPROX. 5" ASPHALT CONCRETE BASE COURSE, TYPE B25.0B, AT AN AVERAGE RATE OF 570 LBS. PER SQ. YD.
E2	PROP. VAR. DEPTH ASPHALT CONCRETE BASE COURSE, TYPE B25.0B, AT AN AVERAGE RATE OF 114 LBS. PER SQ. YD. PER 1" DEPTH. TO BE PLACED IN LAYERS NOT LESS THAN 3" IN DEPTH OR GREATER THAN 5½" IN DEPTH.
T	EARTH MATERIAL
U	EXISTING PAVEMENT
W	PROPOSED WEDGING (SEE APPROPRIATE DETAILS)

NOTE: ALL PAVEMENT SLOPES ARE 1:1 UNLESS SHOWN OTHERWISE.

PROJECT REFERENCE NO.	SHEET NO.
BD-5147	3

STATE OF NORTH CAROLINA
DIVISION OF HIGHWAYS

SUMMARY OF QUANTITIES

Line Item	Spec No.	Quantity	Unit	Description
0000100000-N	800	1	LS	Mobilization
0000400000-N	801	1	LS	Construction Surveying
0000000000-N	337	1	LS	Reinforced Bridge Approach Fill - Sub Regional Tier (Sta. [illegible])
0000000000-N	226	1	LS	Grading
0105700000-E	225	50	CY	Unclassified Excavation
0109700000-E	305	50	Ton	Class IV Subgrade Stabilization
0114000000-E	240	15	CY	Drainage Ditch Excavation
0195000000-E	265	50	CY	Select Granular Material
0196000000-E	270	50	SY	Geotextile for Soil Stabilization
0198000000-E	300	5	Ton	Foundation Conditioning Material, Minor Strs
0508000000-E	310	28	LF	18" CS PIPE CULVERTS, 0.064" THICK
0506000000-E	310	2	EA	18" CS PIPE ELBOWS, 0.064" THICK
1200000000-E	545	60	Ton	Incidental Stone Base
1609000000-E	610	150	Ton	Asphalt Conc Base Course Type B25.0B
1519000000-E	610	190	Ton	Asphalt Conc Surface Course Type S9.5B
1570000000-E	620	20	Ton	Asphalt Binder for Plant Mix
2806000000-N	840	1	EA	Masonry Drainage Structures
2407000000-N	840	1	EA	Steel Frame with Two Grates, STD 840.37
2556000000-E	846	20	LF	Shoulder Berm Gutter
3000000000-E	862	62.5	LF	Steel BM Guardrail
3150000000-N	862	5	EA	Additional Guardrail Posts
3156000000-N	862	4	EA	Guardrail Anchor Units, TYPE III
3170000000-N	862	4	EA	Guardrail Anchor Units, TYPE 350
3620000000-E	876	16	Ton	Rip Rap, Class I
3619000000-E	876	2	Ton	Rip Rap, Class II
3650000000-E	876	7	SY	Geotextile for Drainage
4400000000-E	1110	390	SF	Work Zone Signs (Stationary)
4410000000-E	1110	60	SF	Work Zone Signs (Barricade Mounted)
4445000000-E	1145	40	LF	Barricades (Type III)
4810000000-E	1205	1,660	LF	Paint Pavement Marking Lines (4")
6000000000-E	1605	250	LF	TEMP SILT FENCE
6006000000-E	1610	40	TON	STONE FOR EROS CNTRL, A
6009000000-E	1610	10	TON	STONE FOR EROS CNTRL, B
6012000000-E	1610	20	TON	SEDIMENT CONTROL STONE
6015000000-E	1615	0.3	ACRES	TEMPORARY MULCHING
6018000000-E	1620	50	LBS	SEED FOR TEMP SEEDING
6021000000-E	1620	0.25	TON	FERTILIZER FOR TEMP SEED
6224000000-E	1622	200	LF	TEMP SLOPE DRNS
6250000000-E	127	100	LF	SAFETY FENCE
6300000000-E	1630	10	CY	SILT EXCAVATION
6346000000-E	1631	5,000	SY	MATTING FOR EROSION CONTROL
6420000000-E	1632	85	LF	1/4" HARDWARE CLOTH
6511000000-E	127	50	LF	WATTLE
6644000000-E	1660	0.3	Acre	SEEDING & MULCHING
6700000000-E	1661	50	LBS	SEED FOR REPAIR SEEDING
6800000000-E	1661	0.25	Ton	FERTILIZER FOR REPAIR SEEDING
6900000000-E	1662	50	LBS	SEED FOR SUPPLEMENTAL SEEDING
6100000000-E	1665	0.3	Ton	FERTILIZER TOPDRESSING
6170000000-N	127	3.0	EA	RESPONSE FOR EROSION CONTROL
				STRUCTURAL ITEMS
8000000000-N	402	1.0	LS	REMOVAL OF EXISTING STRUCTURE
8105520000-E	411	71.0	LF	3'-0" DRILLED PIERS IN SOIL
8105620000-E	411	34.0	LF	3'-0" DRILLED PIERS IN NON SOIL
8111200000-E	411	23.0	LF	PERMANENT STEEL CASTINGS FOR 3'-0" DRILLED PIERS
8130000000-N	411	1.0	EA	SID INSPECTIONS
8134000000-N	411	1.0	EA	SPT TESTING
8135000000-N	411	1.0	EA	CROSSHOLE SONIC LOGGING (CSL)
8200000000-N	415	1.0	LS	UNCLASSIFIED STRUCTURE EXCAVATION
8183000000-E	420	57.3	CY	CLASS A CONCRETE (BRIDGE)
8200000000-N	422	1.0	LS	BRIDGE APPROACH SLABS
8210000000-E	425	17,654.0	LBS	REINFORCING STEEL (BRIDGE)
8240000000-E	425	2,319.0	LBS	SPIRAL COLUMN REINFORCING STEEL
8300000000-E	450	375.0	LF	HP12X53 STEEL PILES
8500000000-N	450	10.0	EA	STEEL PILE POINTS
8600000000-E	460	180.0	LF	VERTICAL CONC. BARRIER
8700000000-E	876	265.0	TONS	RIP RAP CLASS II (2'-0" THICK)
8800000000-E	876	290.0	SY	GEOTEXTILE FOR DRAINAGE
8850000000-N	430	1.0	LS	ELASTOMERIC BEARINGS
8730000000-E	430	300.0	LF	3'-0" X 1'-0" PRESTRESSED CONCRETE CORED SLABS
8735000000-E	430	600.0	LF	3'-0" X 2'-0" PRESTRESSED CONCRETE CORED SLABS
8847000000-E	452	350.0	SF	SHEET PILE RET WALL

COMPUTED BY: CBC	DATE: 01-16-12
CHECKED BY: RMS	DATE: 01-16-12

STATE OF NORTH CAROLINA
DIVISION OF HIGHWAYS

PROJECT REFERENCE NO.	SHEET NO.
BD-5114V	3-A

RIGHT OF WAY AREA DATA

PARCEL NO.	PROPERTY OWNERS NAMES	TOTAL ACREAGE	AREA TAKEN (sf)	AREA REMAINING RT. (Acre)	AREA REMAINING LT. (Acre)	CONST. EASE. (sf)	PERM. DRAIN. EASE. (sf)	TEMP. DRAIN. EASE. (sf)
1	MARK J. & LISA SMITH COOPER	2.936	5739		2.804			
2	HAYWARD WILLIAM SMITH	4.953	8476	4.758		1692		
3	CLEVELAND YELTON	3.118	3020	3.049		56		
4	ERNISTINE BEHELER	6.04	5786		5.907			

PAVEMENT REMOVAL SUMMARY

IN SQUARE YARDS

LINE	LOCATION	ASPHALT REMOVAL	ASPHALT BREAK-UP	CONCRETE REMOVAL	CONCRETE REMOVAL
-L-	22+00 TO 23+13	226			
-L-	23+63 TO 25+10	294			
	TOTAL	520			

Approximate quantities only. Unclassified excavation, borrow excavation, fine grading, clearing and grubbing, and removal of existing pavement will be paid for at the contract lump sum price for "grading".

NOTE: Invert Elevations are for Bid Purposes only and shall not be used for project construction stakeout.
See "Standard Specifications For Roads and Structures, Section 300-5".

SUB-REGIONAL & REGIONAL LIST OF PIPES, ENDWALLS, ETC. (FOR PIPES 48" & UNDER)

STATION / SIZE / THICKNESS OR GAUGE	LOCATION (LT, RT, OR CL)	STRUCTURE NO. FROM	STRUCTURE NO. TO	TOP ELEVATION	INVERT ELEVATION	INVERT ELEVATION	SLOPE CRITICAL	DRAINAGE PIPE (RCP, CSP, CAAP, HDPE, or PVC) 12"	15"	18"	24"	30"	36"	42"	48"	DO NOT USE RCP	DO NOT USE CSP	DO NOT USE CAAP	DO NOT USE HDPE	C.S. PIPE 12" .064	15" .064	18" .064	24" .064	36" .079	42" .109	48" .109	R.C. PIPE (CLASS III) 15"	18"	24"	30"	36"	42"	48"	R.C. PIPE (CLASS IV) 12"	15"	18"	24"	30"	36"	42"	48"
-L- 24+05	LT	4-2		857.68'	855.02'																																				
-L- 24+05	LT	4-2	4-1		855.02'	846.79'			24																																
TOTAL									24																																

STATION	*** R. C. PIPE (CLASS V)	*** R. C. PIPE CULVERTS, CONTRACTOR DESIGN PIPE	*** R. C. PIPE CULVERTS, CONTRACTOR DESIGN PIPE	15" SIDE DRAIN PIPE	18" SIDE DRAIN PIPE	ENDWALLS STD. 838.01, STD. 838.11 OR STD. 838.80 (UNLESS NOTED OTHERWISE) CU. YDS. R.C.P.	C.S.P.	QUANTITIES FOR DRAINAGE STRUCTURES PER EACH (0' THRU 5.0')	* TOTAL L.F. FOR PAY QUANTITY SHALL BE COL. 'A' + (1.3 X COL.'B') LIN. FT. A 5.0' THRU 10.0'	B 10.0' AND ABOVE	C.B. STD. 840.01 OR STD. 840.02	FRAME, GRATES AND HOOD STANDARD 840.03 TYPE OF GRATE E	F	G	CONCRETE TRANSITIONAL SECTION CATCH BASIN	DROP INLET	T.B.D.I. STD. 840.36	T.B.D.I. FRAME WITH TWO GRATES STD. 840.37	CORR. STEEL ELBOWS NO. & SIZE	CONC. COLLARS CL "B" C.Y. STD 840.72	CONC. & BRICK PIPE PLUG, C.Y. STD. 840.71	PIPE REMOVAL LIN.FT.	REMARKS
-L- 24+05								1								1	1	1					
-L- 24+05																			2-15"				
TOTAL								1								1	1	1	2-15"				

ABBREVIATIONS

C.B.	CATCH BASIN
N.D.I.	NARROW DROP INLET
D.I.	DROP INLET
G.D.I.	GRATED DROP INLET
G.D.I. (N.S.)	GRATED DROP INLET (NARROW SLOT)
J.B.	JUNCTION BOX
M.H.	MANHOLE
T.B.D.I.	TRAFFIC BEARING DROP INLET
T.B.J.B.	TRAFFIC BEARING JUNCTION BOX

"N" = DISTANCE FROM EDGE OF LANE TO FACE OF GUARDRAIL.
TOTAL SHOULDER WIDTH = DISTANCE FROM EDGE OF TRAVEL LANE TO SHOULDER BREAK POINT.
FLARE LENGTH = DISTANCE FROM LAST SECTION OF PARALLEL GUARDRAIL TO END OF GUARDRAIL.
W = TOTAL WIDTH OF FLARE FROM BEGINNING OF TAPER TO END OF GUARDRAIL.
G = GATING IMPACT ATTENUATOR TYPE 350
NG = NON-GATING IMPACT ATTENUATOR TYPE 350

GUARDRAIL SUMMARY

SURVEY LINE	BEG. STA.	END STA.	LOCATION	LENGTH STRAIGHT	LENGTH SHOP CURVED	LENGTH DOUBLE FACED	WARRANT POINT APPROACH END	WARRANT POINT TRAILING END	"N" DIST. FROM E.O.L.	TOTAL SHOUL. WIDTH	FLARE LENGTH APPROACH END	FLARE LENGTH TRAILING END	W APPROACH END	W TRAILING END	ANCHORS XI MOD	XI	GRAU 350	M-350	TYPE III	CAT-1	B-77	BIC	AT-1	IMPACT ATTENUATOR TYPE 350 EA	G	NG	SINGLE FACED GUARDRAIL	REMOVE EXISTING GUARDRAIL	REMOVE AND STOCKPILE EXISTING GUARDRAIL	REMARKS
-L-	21+90.66	22+80.15	RT	100				22+80.15	4	6	75		1.5				1		1											
-L-	22+24.83	22+95.90	LT	75				22+95.90	4	6		50	1				1		1											
-L-	23+72.50	24+40.70	RT	75			23+72.50		4	6		50		1			1		1											
-L-	23+89.19	24+96.20	LT	112.5			23+89.19		4	6	87.5		1.75				1		1											
			SUBTOTAL	362.5													4		4											
			LESS DEDUCTIONS FOR ANCHORS																											
			GRAU-350 4 @ 50'=	-200																										
			TYPE III 4 @ 25'=	-100																										
			PROJECT TOTALS:	62.5																										
			ADDITIONAL GUARDRAIL POSTS=5 EA.																											

COMPUTED BY: CBC	DATE: 10-19-11
CHECKED BY: RMS	DATE: 10-19-11

PROJECT REFERENCE NO.	SHEET NO.
BD-5114V	3-B

DIVISION OF HIGHWAYS
STATE OF NORTH CAROLINA

SUMMARY OF EARTHWORK

IN CUBIC YARDS

LOCATION	UNCLASSIFIED EXCAVATION	UNDERCUT	EMBT+%	BORROW	WASTE
SUMMARY NO.1					
-L- STA. 21+50.00 TO STA. 22+88.03 (BEG. BRIDGE)	118		181	63	
SUBTOTAL SUMMARY NO.1	118		181	63	
SUMMARY NO.2					
-L- STA. 23+80.77 (END BRIDGE) TO STA. 25+65.00	10		646	636	
SUBTOTAL SUMMARY NO.2	10		646	636	
PROJECT SUBTOTAL	128		827	699	
EST. 5% FOR REPLACING TOP SOIL ON BORROW PITS				35	
GRAND TOTAL	128		829	734	
SAY	135			740	
DDE = 15 CY					

CONTINGENCY ITEMS:

INCIDENTAL STONE = 60 TONS

UNDERCUT EXCAVATION = 50 CY

SELECT GRANULAR MATERIAL = 50 CY

CLASS IV SUBGRADE STABILIZATION = 50 TONS

GEOTEXTILE FOR SOIL STABILIZATION = 50 SY

Approximate quantities only. Unclassified excavation, borrow excavation, fine grading, clearing and grubbing, and removal of existing pavement will be paid for at the contract lump sum price for "grading".

PROJECT REFERENCE NO.	SHEET NO.
BD-5114V	4

R/W SHEET NO.

ROADWAY DESIGN ENGINEER — 6/21/12 6/21/12

HYDRAULICS ENGINEER — 06/21/2012

V&M Vaughn & Melton Consulting Engineers — Asheville, North Carolina — Charlotte, North Carolina; Tri-Cities, Tennessee; Knoxville, Tennessee; Middlesboro, Kentucky; Spartanburg, South Carolina

DATUM DESCRIPTION

THE LOCALIZED COORDINATE SYSTEM DEVELOPED FOR THIS PROJECT IS BASED ON THE STATE PLANE COORDINATES ESTABLISHED BY NCDOT FOR MONUMENT "GPS-100"
WITH NAD 83/NSRS 2007 STATE PLANE GRID COORDINATES OF
NORTHING: 553534.746(ft) EASTING: 1111566.945(ft)
ELEVATION: 900.91(ft)
THE AVERAGE COMBINED GRID FACTOR USED ON THIS PROJECT (GROUND TO GRID) IS: 0.999835384
THE N.C. LAMBERT GRID BEARING AND LOCALIZED HORIZONTAL GROUND DISTANCE FROM "GPS-100" TO -L- STATION 20+00.00 IS N01°52'01"W 976.14'
ALL LINEAR DIMENSIONS ARE LOCALIZED HORIZONTAL DISTANCES
VERTICAL DATUM USED IS NAVD 88

BL-1	554,809.3288	1,111,050.5844	863.39'
BL-2	554,764.0048	1,111,294.1430	855.20'
BL-3	554,624.7031	1,111,509.2991	865.96'

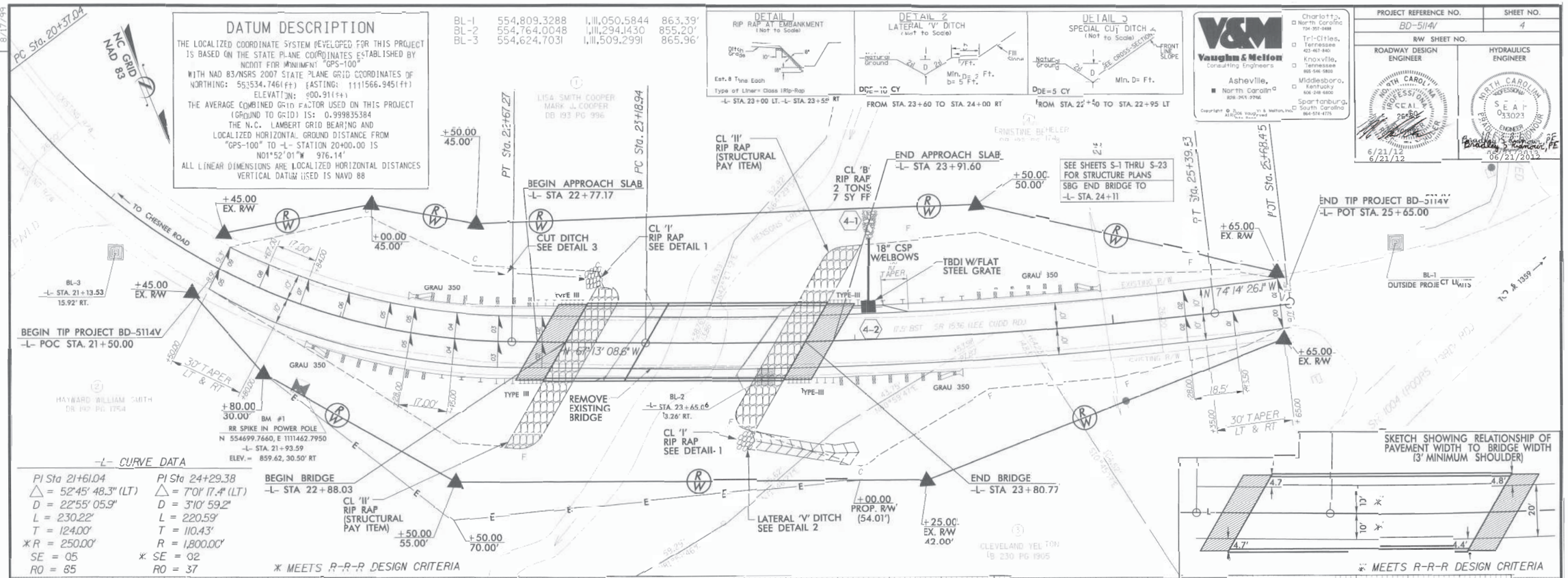

-L- CURVE DATA

PI Sta 21+61.04	PI Sta 24+29.38
Δ = 52°45' 48.3" (LT)	Δ = 7°01' 17.4" (LT)
D = 22°55' 05.9"	D = 3°10' 59.2"
L = 230.22'	L = 220.59'
T = 124.00'	T = 110.43'
*R = 250.00'	R = 1,800.00'
SE = 05	* SE = 02
RO = 85	RO = 37

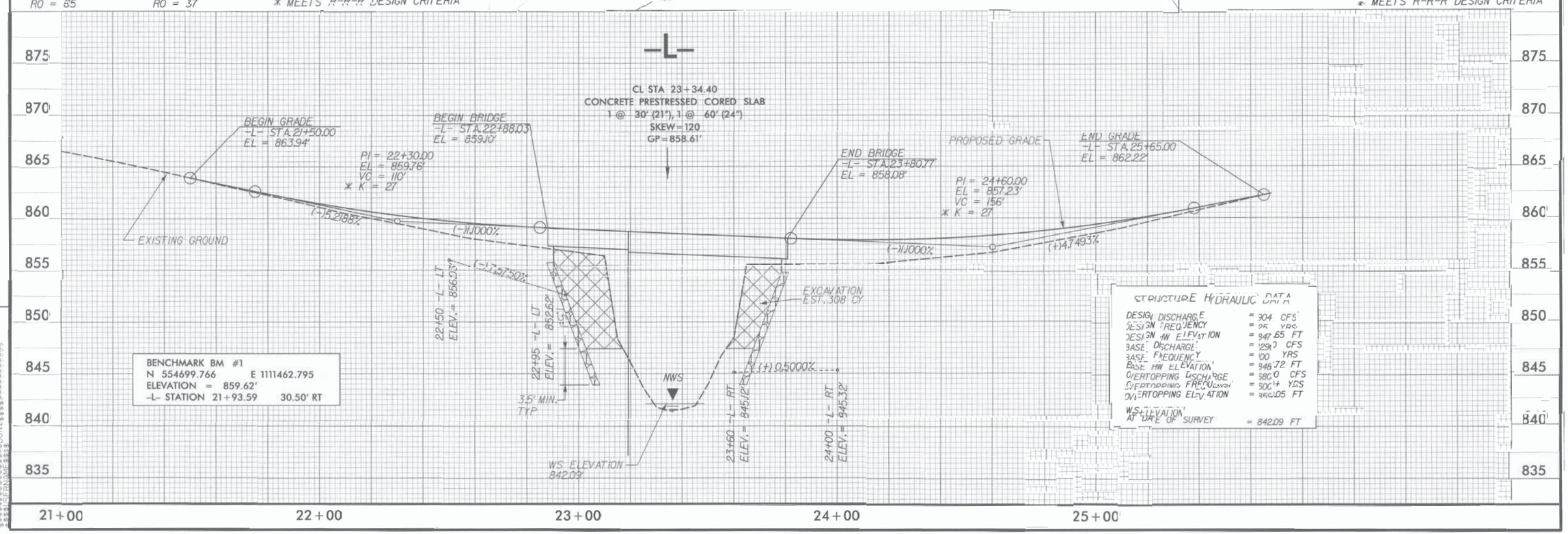

STATE OF NORTH CAROLINA
DIVISION OF HIGHWAYS

TRANSPORTATION MANAGEMENT PLAN

POLK COUNTY

DIVISION 14

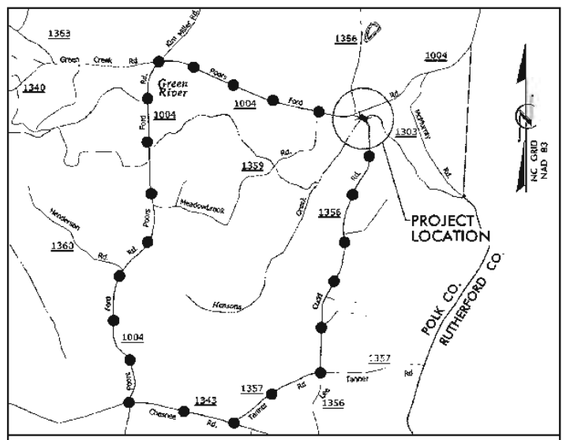

VICINITY MAP

OFF-SITE DETOUR ROUTE

LOCATION: BRIDGE NO. 89 OVER HENSONS CREEK ON SR 1356 (LEE CUDD RD.)

INDEX OF SHEETS

SHEET NO.	TITLE
TMP-1	TITLE SHEET, LEGEND, AND INDEX OF SHEETS
TMP-1A	LIST OF APPLICABLE ROADWAY STANDARD DRAWINGS, GENERAL NOTES AND TRANSPORTATION OPERATIONS
TMP-1B	SPECIAL SIGN DESIGN
TMP-2	TEMPORARY TRAFFIC CONTROL DETAIL, PHASING NOTES OFFSITE DETOUR SIGNING AND ROAD CLOSURE

LEGEND

GENERAL

NORTH ARROW

TRAFFIC CONTROL DEVICES

BARRICADE (TYPE III)

TEMPORARY SIGNING

STATIONARY SIGN

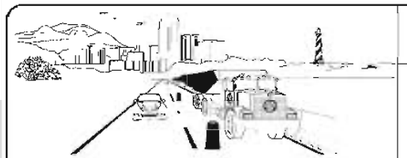

WORK ZONE SAFETY & MOBILITY
"from the MOUNTAINS to the COAST"

N.C.D.O.T. WORK ZONE TRAFFIC CONTROL
1580 MAIL SERVICE CENTER (MSC) RALEIGH, NC 27699-1580
1020 BIRCH RIDGE DRIVE, RALEIGH, NC 27610 (DELIVERY)
PHONE: (919) 250-4094 FAX: (919) 250-4098

J. S. BOURNE, P.E. STATE TRAFFIC MANAGEMENT ENGINEER
LLOYD D. BROWN, P.E. TRAFFIC CONTROL PROJECT ENGINEER
AARON CARVER, P.E. TRAFFIC CONTROL PROJECT DESIGN ENGINEER
AARON CARVER, P.E. TRAFFIC CONTROL DESIGN ENGINEER

DIVISION OF HIGHWAYS · STATE OF NORTH CAROLINA · DEPARTMENT OF TRANSPORTATION · WORK ZONE TRAFFIC CONTROL

V&M Vaughn & Melton Consulting Engineers
Asheville, North Carolina 828-253-2796
Charlotte, North Carolina 704 357-0488

Copyright © 2006 Vaughn & Melton, Inc. All Rights Reserved

PROJECT ENGINEER LLOYD D. BROWN, P.E.
DESIGN ENGINEER AARON CARVER, P.E.

APPROVED:
DATE:
SEAL

SHEET NO.
TMP-1

TIP PROJECT: BD-5114

PROJ. REFERENCE NO.	SHEET NO.
BD-5114V	TMP-1A

ROADWAY STANDARD DRAWINGS

THE FOLLOWING ROADWAY STANDARDS AS SHOWN IN "ROADWAY STANDARD DRAWINGS" - PROJECT SERVICES UNIT - N.C. DEPARTMENT OF TRANSPORTATION - RALEIGH, N.C., DATED JANUARY 2012 ARE APPLICABLE TO THIS PROJECT AND BY REFERENCE HEREBY ARE CONSIDERED A PART OF THESE PLANS:

STD. NO.	TITLE
1101.03	TEMPORARY ROAD CLOSURES
1101.05	WORK ZONE VEHICLE ACCESSES
1101.11	TRAFFIC CONTROL DESIGN TABLES
1110.01	STATIONARY WORK ZONE SIGNS
1130.01	DRUMS
1145.01	BARRICADES
1205.01	PAVEMENT MARKINGS - LINE TYPES & OFFSETS
1205.04	PAVEMENT MARKINGS - INTERSECTIONS
1205.08	PAVEMENT MARKINGS - SYMBOLS & WORD MESSAGES
1205.12	PAVEMENT MARKINGS - BRIDGES

TRANSPORTATION OPERATIONS

CONSTRUCTION

REMOVE AND REPLACE EXISTING STRUCTURE AND APPROACHES ALONG THE EXISTING ROADWAY ALIGNMENT AS SHOWN IN THE CONSTRUCTION PLANS.

TMP DESIGN PARAMETERS

TRAFFIC WILL BE DETOURED OFF-SITE DURING THE CONSTRUCTION PERIOD.

THE OFF-SITE DETOUR WILL INCLUDE SR 1357, SR 1343, AND SR 1004 (SEE SHEET TMP-2).

GENERAL NOTES

CHANGES MAY BE REQUIRED WHEN PHYSICAL DIMENSIONS IN THE DETAIL DRAWINGS, STANDARD DETAILS AND ROADWAY DETAILS ARE NOT ATTAINABLE TO MEET FIELD CONDITIONS, OR RESULT IN DUPLICATE, OR UNDESIRED OVERLAPPING OF DEVICES. MODIFICATION MAY INCLUDE: MOVING, SUPPLEMENTING, COVERING OR REMOVAL OF DEVICES, AS DIRECTED BY THE ENGINEER.

THE FOLLOWING GENERAL NOTES APPLY AT ALL TIMES FOR THE DURATION OF THE CONSTRUCTION PROJECT, EXCEPT WHEN OTHERWISE NOTED IN THE PLAN, OR DIRECTED BY THE ENGINEER.

TRAFFIC PATTERN ALTERATIONS

A) NOTIFY THE ENGINEER TWENTY ONE (21) CALENDAR DAYS PRIOR TO ANY TRAFFIC PATTERN ALTERATION.

SIGNING

B) PROVIDE PERMANENT SIGNING.

C) PROVIDE SIGNING AND DEVICES REQUIRED TO CLOSE THE ROAD ACCORDING TO THE ROADWAY STANDARD DRAWINGS AND TRAFFIC CONTROL PLANS.

PROVIDE SIGNING REQUIRED FOR THE OFF-SITE DETOUR ROUTE AS SHOWN IN THE TRAFFIC CONTROL PLANS.

D) COVER OR REMOVE ALL SIGNS AND DEVICES REQUIRED TO CLOSE THE ROAD WHEN ROAD CLOSURE IS NOT IN OPERATION.

COVER OR REMOVE ALL SIGNS REQUIRED FOR THE OFF-SITE DETOUR WHEN THE DETOUR IS NOT IN OPERATION.

E) ENSURE ALL NECESSARY SIGNING IS IN PLACE PRIOR TO ALTERING ANY TRAFFIC PATTERN.

TRAFFIC CONTROL DEVICES

F) PLACE TYPE III BARRICADES WITH "ROAD CLOSED" SIGN R-11-2 ATTACHED OF SUFFICIENT LENGTH TO CLOSE ENTIRE ROADWAY.

PAVEMENT MARKINGS AND MARKERS

G) INSTALL PAVEMENT MARKINGS (PAINT) ON THE FINAL SURFACE OF THE ENTIRE PROJECT.

H) TIE PROPOSED PAVEMENT MARKING LINES TO EXISTING PAVEMENT MARKING LINES.

LOCAL NOTES

1. NOTIFY POLK COUNTY EMERGENCY SERVICES AND PUBLIC SCHOOLS AT LEAST ONE MONTH PRIOR TO ROAD CLOSURE.

V&M
Vaughn & Melton
Consulting Engineers
Asheville, North Carolina 828-253-2796
Charlotte, North Carolina 704 357-0488
Tri-Cities, Tennessee 423-467-8401
Knoxville, Tennessee 865 546 5800
Middlesboro, Kentucky 606 248 6600
Spartanburg, South Carolina 864-574-4775
Copyright © 2006 Vaughn & Melton, Inc. All Rights Reserved

APPROVED:__________ DATE:_______

SEAL

NORTH CAROLINA PROFESSIONAL SEAL 20119 ENGINEER LLOYD D. BROWN

DIVISION OF HIGHWAYS STATE OF NORTH CAROLINA DEPARTMENT OF TRANSPORTATION WORK ZONE TRAFFIC CONTROL

ROADWAY STANDARD DRAWINGS, GENERAL NOTES & TRANSPORTATION OPERATIONS

PROJ. REFERENCE NO.	SHEET NO.
BD-5114V	TMP-1B

SIGN NUMR: LEE CUDD ROAD
TYPE: D Ground
QUANTITY: 1

BACKG. COLOR: Orange
COPY COLOR: Black

DESIGN BY: ACC
PROJECT ID: BD-5114V

CHK BY: ACC
DIV: 14

STD #: STD
DATE: May 17,2012

SIGN WIDTH: 4'-0"
HEIGHT: 1'-6"
TOTAL AREA: 6.0 Sq.Ft.

MAT'L: 0.063 in.(1.6 mm) ALUMINUM

BORDER TYPE: FLUSH
RECESS: 0.47"
WIDTH: 0.63"
RADII: 1.5"

NO. Z BARS:
LENGTH: in.

SYMBOL	X	Y	WID	HT

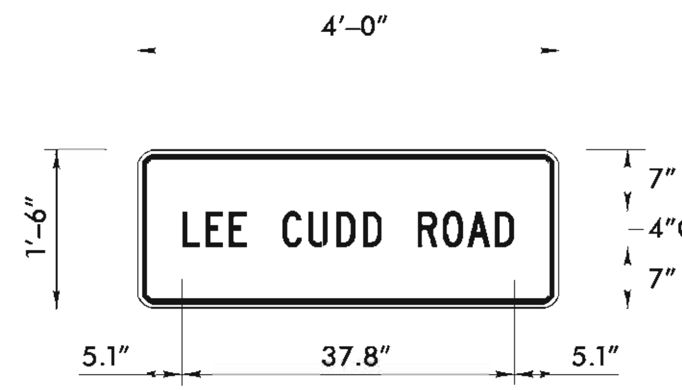

BORDER
R=1.5"
TH=0.63"
IN=0.47"

Panel Style: construction_guide.ssi
M.U.T.C.D.: 2009 Edition

USE NOTES: 1,3,4,6

1. Legend and border shall be direct applied encapsulated lens reflective sheeting.
2. Legend and border shall be direct applied enclosed lens reflective sheeting.
3. Shields shall be encapsulated lens reflective sheeting on 0.8mm aluminum and demountable.
4. Background shall be encapsulated lens reflective sheeting.
5. Background shall be enclosed lens reflective sheeting.
6. Center arrows vertically on sign.

Letter spacings are to start of next letter

	L	E	E		C	U	D	D		R	O	A	D		Series/Size Text Length
															C 2000/4
5.1	2.6	2.7	2	4	3	3.1	3	2.2	4	2.8	2.8	3.1	2.2	5.1	47.5

Spacing Factor is 1 unless specified otherwise
FILENAME: GS40_ENGL

APPROVED: DATE:

SEAL

NORTH CAROLINA PROFESSIONAL SEAL 20119 ENGINEER LLOYD D. BROWN

DIVISION OF HIGHWAYS STATE OF NORTH CAROLINA DEPARTMENT OF TRANSPORTATION WORK ZONE TRAFFIC CONTROL

SPECIAL SIGN DESIGN

PROJ. REFERENCE NO.	SHEET NO.
8D-5114V	TMP-2

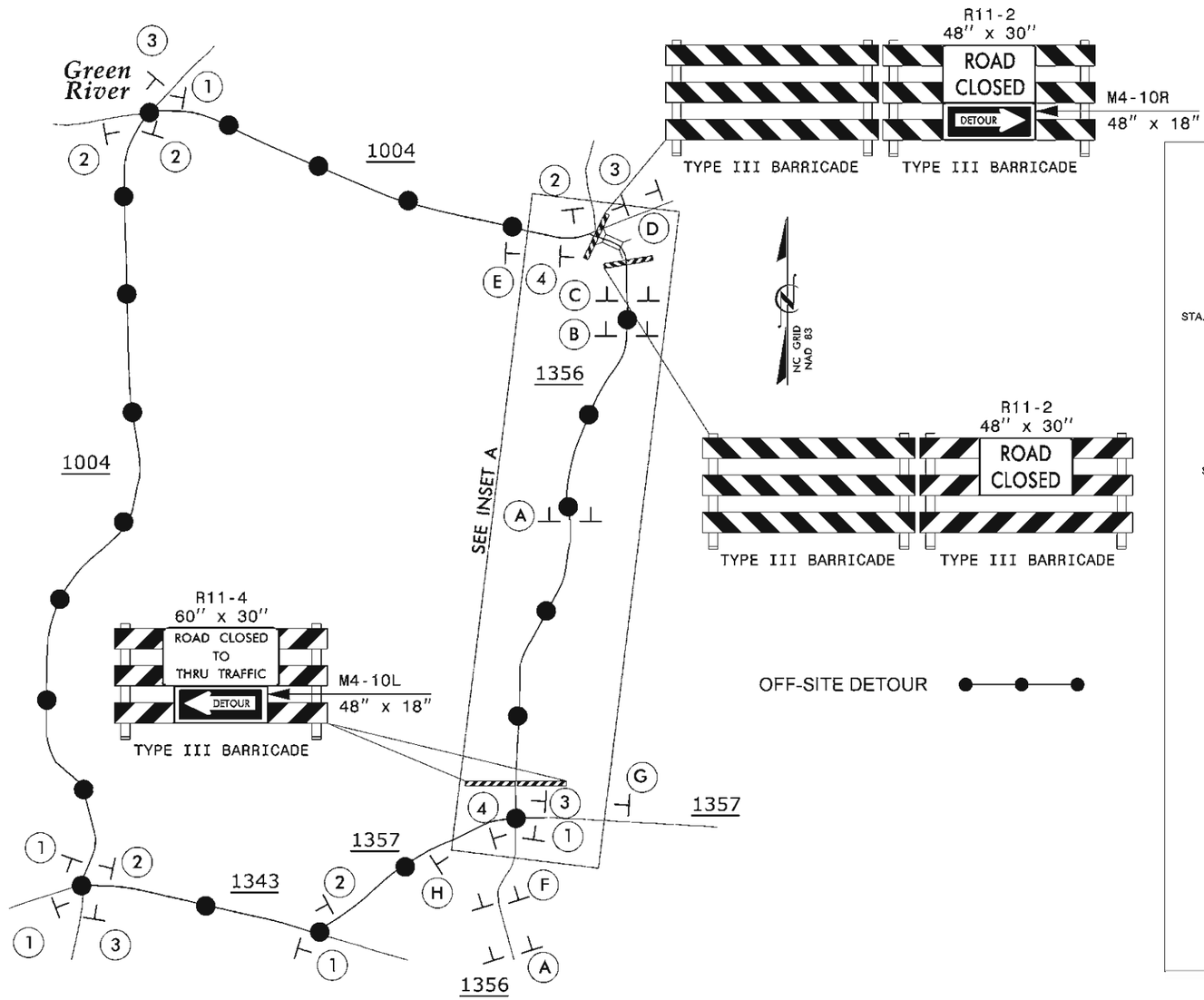

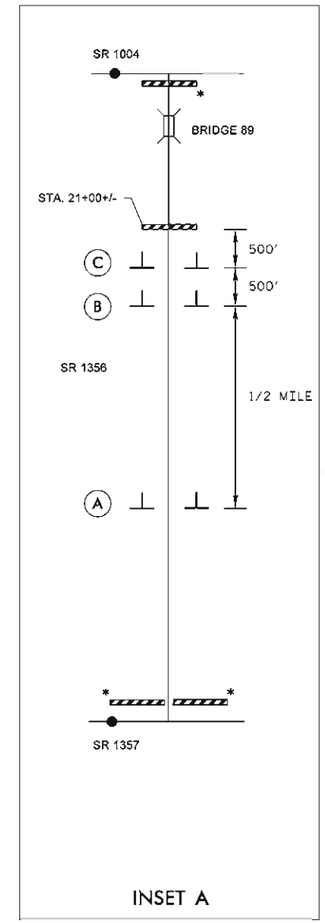

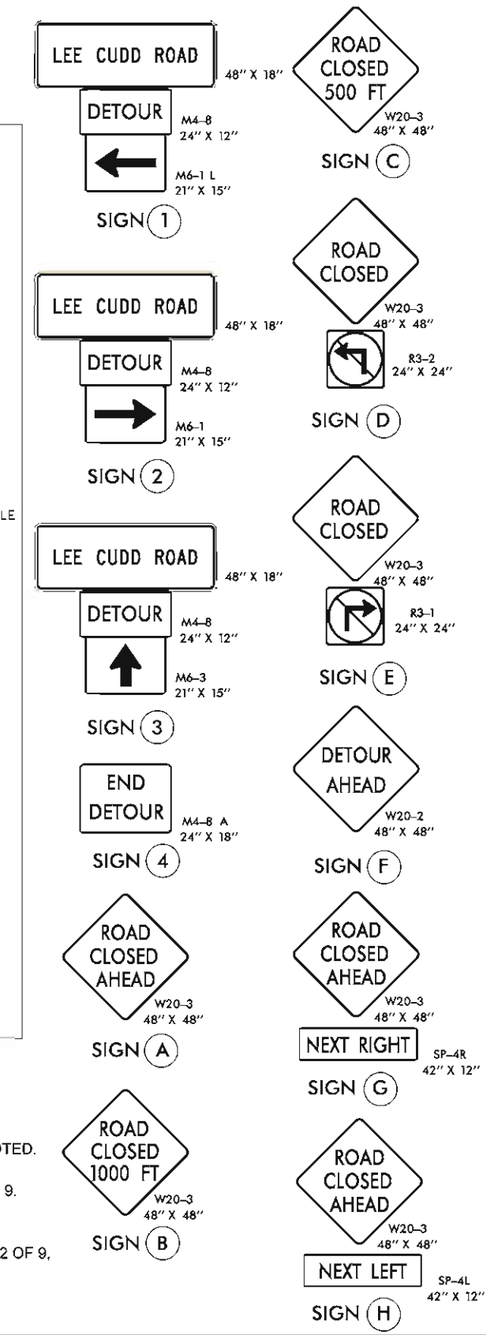

PHASING

STEP 1: - INSTALL OFF-SITE DETOUR ROUTE SIGN ASSEMBLIES FOR THE CLOSING OF SR 1356 (LEE CUDD ROAD, -L-).

- USING ROADWAY STANDARD DRAWING NO. 1101.03, SHEETS 1 OF 9 AND 2 OF 9, CLOSE SR 1356 (LEE CUDD ROAD, -L-) TO THRU TRAFFIC.

STEP 2: - REMOVE THE EXISTING STRUCTURE AND CONSTRUCT THE PROPOSED STRUCTURE AND ROADWAY UP TO AND INCLUDING THE FINAL LAYER OF SURFACE COURSE AND PLACE FINAL PAVEMENT MARKINGS ON SR 1356 (LEE CUDD ROAD, -L-) FROM STATION 21+50 +/- -L- TO STATION 25+65 +/- -L-. (SEE CONSTRUCTION PLANS).

STEP 3: - REMOVE ALL TRAFFIC CONTROL DEVICES, SIGNING AND DETOUR ROUTE SIGNING.

- OPEN TO FINAL TRAFFIC PATTERN.

NOTES:

- ALL DETOUR SIGN LOCATIONS ARE APPROXIMATE.
- ALL DETOUR SIGNS ARE BLACK ON ORANGE UNLESS OTHERWISE NOTED.
- TRAFFIC CONTROL DEVICES (A) THROUGH (H) SHALL BE INSTALLED ACCORDING TO ROADWAY STANDARD DRAWING 1101.03, SHEET 1 OF 9.
- TRAFFIC CONTROL DEVICES (1) THROUGH (4) SHALL BE INSTALLED AS PER ENGINEER'S INSTRUCTIONS, AND AS SHOWN HEREON.
- SEE ROADWAY STANDARD DRAWING NO. 1101.03, SHEET 1 OF 9 AND 2 OF 9, FOR ADDITIONAL WORK ZONE SIGNS.

V&M
Vaughn & Melton
Consulting Engineers
Asheville, North Carolina 828 253 2796
Charlotte, North Carolina 704 357-0488
Tri-Cities, Tennessee 423-467-8401
Knoxville, Tennessee 865-546-3800
Middlesboro, Kentucky 606-248 6500
Spartanburg, South Carolina 864-574 4175

Copyright © 2006 Vaughn & Melton, Inc. All Rights Reserved

APPROVED:_____ DATE:_____

SEAL

NORTH CAROLINA PROFESSIONAL SEAL 20119 ENGINEER LLOYD D. BROWN

DIVISION OF HIGHWAYS STATE OF NORTH CAROLINA DEPARTMENT OF TRANSPORTATION WORK ZONE TRAFFIC CONTROL

TEMPORARY TRAFFIC CONTROL DETAIL, PHASING NOTES, OFFSITE DETOUR SIGNING AND ROAD CLOSURE

ROADSIDE ENVIRONMENTAL UNIT
DEPARTMENT OF TRANSPORTATION
DIVISION OF HIGHWAYS
RALEIGH, N.C.

2012 STANDARD SPECIFICATIONS

EROSION CONTROL PLAN

PROJECT REFERENCE NO.	SHEET NO.
BD-5114V	EC-1
R/W SHEET NO.	
ROADWAY DESIGN ENGINEER	HYDRAULICS ENGINEER

THESE EROSION AND SEDIMENT CONTROL PLANS COMPLY WITH THE REGULATIONS SET FORTH BY THE NCG-010000 GENERAL CONSTRUCTION PERMIT EFFECTIVE AUGUST 3, 2011 ISSUED BY THE NORTH CAROLINA DEPARTMENT OF ENVIRONMENT AND NATURAL RESOURCES DIVISION OF WATER QUALITY.

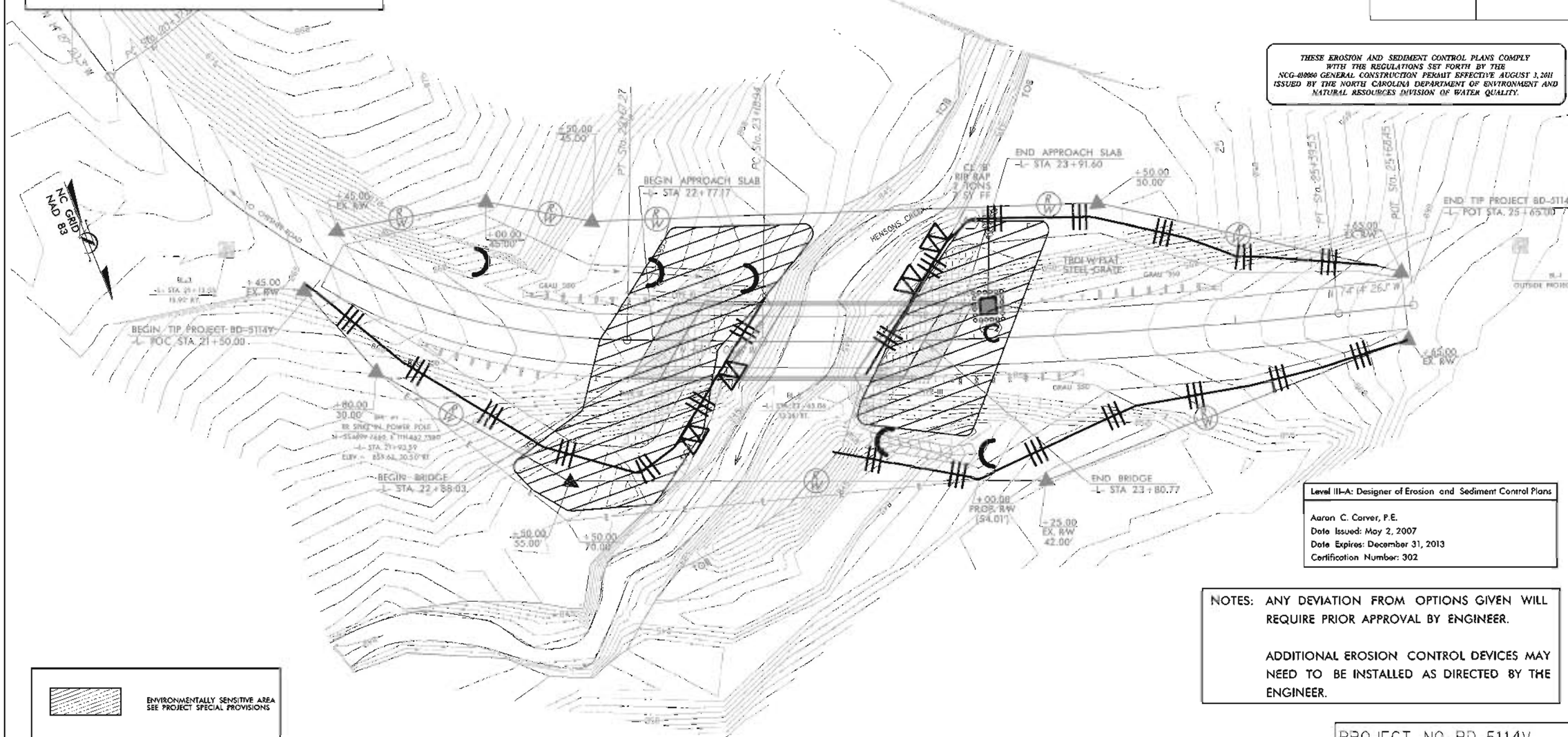

Level III-A: Designer of Erosion and Sediment Control Plans

Aaron C. Carver, P.E.
Date Issued: May 2, 2007
Date Expires: December 31, 2013
Certification Number: 302

NOTES: ANY DEVIATION FROM OPTIONS GIVEN WILL REQUIRE PRIOR APPROVAL BY ENGINEER.

ADDITIONAL EROSION CONTROL DEVICES MAY NEED TO BE INSTALLED AS DIRECTED BY THE ENGINEER.

ENVIRONMENTALLY SENSITIVE AREA
SEE PROJECT SPECIAL PROVISIONS

Std. #	Description	Symbol
	Wattle	
1605.01	Temporary Silt Fence	
1606.01	Special Sediment Control Fence	
1622.01	Temporary Berms and Slope Drains	
1632.03	Rock Inlet Sediment Trap Type C	

PROJECT NO. BD-5114V
COUNTY POLK
STATION: 13+02
REPLACES BRIDGE NO. 89

STATE OF NORTH CAROLINA
DEPARTMENT OF TRANSPORTATION
RALEIGH

BRIDGE #89 ON SR 1356
OVER HENSONS CREEK

REVISIONS							SHEET NO.
NO.	BY	DATE	NO.	BY	DATE		EC-1
1			3				TOTAL SHEETS
2			4				1

PROJECT REFERENCE NO.	SHEET NO.
BD-5114V	EC-1A
R/W SHEET NO.	
ROADWAY DESIGN ENGINEER	HYDRAULICS ENGINEER

WATTLE DETAIL

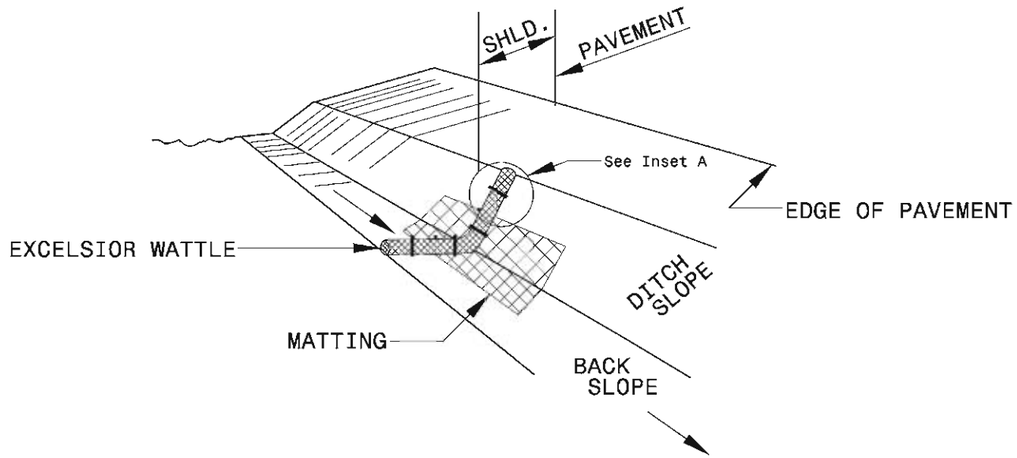

ISOMETRIC VIEW

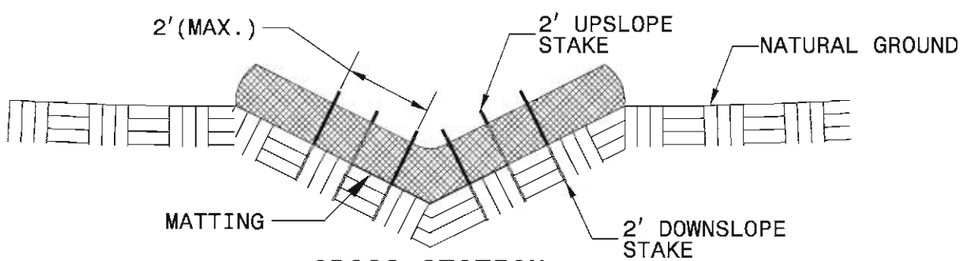

CROSS SECTION VEE DITCH

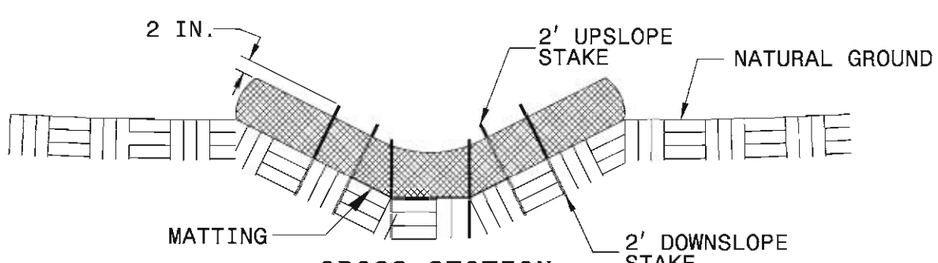

CROSS SECTION TRAPEZOIDAL DITCH

NOTES:

USE MINIMUM 12 IN. DIAMETER EXCELSIOR WATTLE.

USE 2 FT. WOODEN STAKES WITH A 2 IN. BY 2 IN. CROSS SECTION.

ONLY INSTALL WATTLE(S) TO A HEIGHT IN DITCH SO FLOW WILL NOT WASH AROUND WATTLE AND SCOUR DITCH SLOPES AND AS DIRECTED.

INSTALL A MINIMUM OF 2 UPSLOPE STAKES AND 4 DOWNSLOPE STAKES AT AN ANGLE TO WEDGE WATTLE TO BOTTOM OF DITCH.

PROVIDE STAPLES MADE OF 0.125 IN. DIAMETER STEEL WIRE FORMED INTO A U SHAPE NOT LESS THAN 12" IN LENGTH.

INSTALL STAPLES APPROXIMATELY EVERY 1 LINEAR FOOT ON BOTH SIDES OF WATTLE AND AT EACH END TO SECURE IT TO THE SOIL.

INSTALL MATTING IN ACCORDANCE WITH SECTION 1631 OF THE STANDARD SPECIFICATIONS.

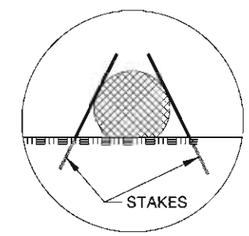

INSET A

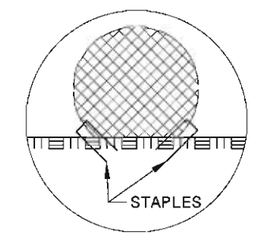

INSET B

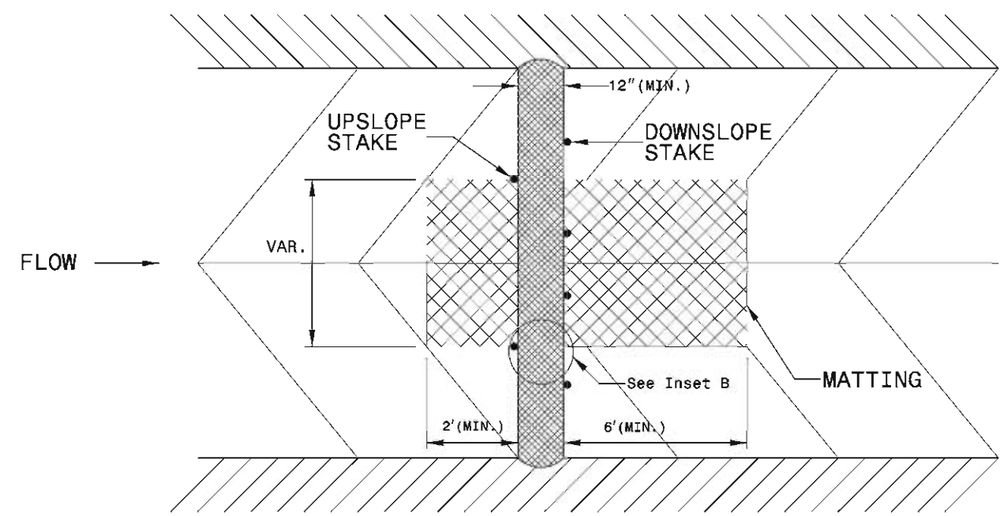

TOP VIEW

PROJECT REFERENCE NO.	SHEET NO.
BD-5114V	EC-2
R/W SHEET NO.	
ROADWAY DESIGN ENGINEER	HYDRAULICS ENGINEER

STATE OF NORTH CAROLINA
DIVISION OF HIGHWAYS

SOIL STABILIZATION TIMEFRAMES

SITE DESCRIPTION	STABILIZATION TIME	TIMEFRAME EXCEPTIONS
PERIMETER DIKES, SWALES, DITCHES, AND SLOPES	7 DAYS	NONE
HIGH QUALITY WATER (HQW) ZONES	7 DAYS	NONE
SLOPES STEEPER THAN 3:1	7 DAYS	IF SLOPES ARE 10' OR LESS IN LENGTH AND ARE NOT STEEPER THAN 2:1, 14 DAYS ARE ALLOWED.
SLOPES 3:1 OR FLATTER	14 DAYS	7 DAYS FOR SLOPES GREATER THAN 50' IN LENGTH.
ALL OTHER AREAS WITH SLOPES FLATTER THAN 4:1	14 DAYS	NONE, EXCEPT FOR PERIMETERS AND HQW ZONES.

TIP PROJECT: BD-5114V

T.I.P. NO.	SHEET NO.
BD-5114V	UO-1

See Sheet 1A For Index of Sheets
See Sheet 1B For Standard Symbology Sheet

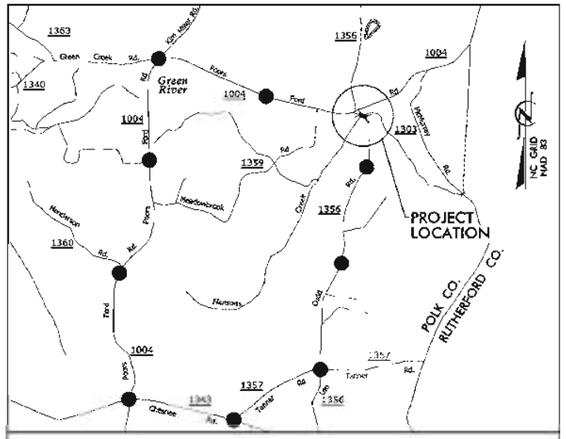

VICINITY MAP

DETOUR ROUTE

STATE OF NORTH CAROLINA
DIVISION OF HIGHWAYS

UTILITIES BY OTHERS PLANS
POLK COUNTY

LOCATION: BRIDGE NO. 89 OVER HENSONS CREEK ON SR 1356 (LEE CUDD ROAD)

TYPE OF WORK: AERIAL TELEPHONE & POWER

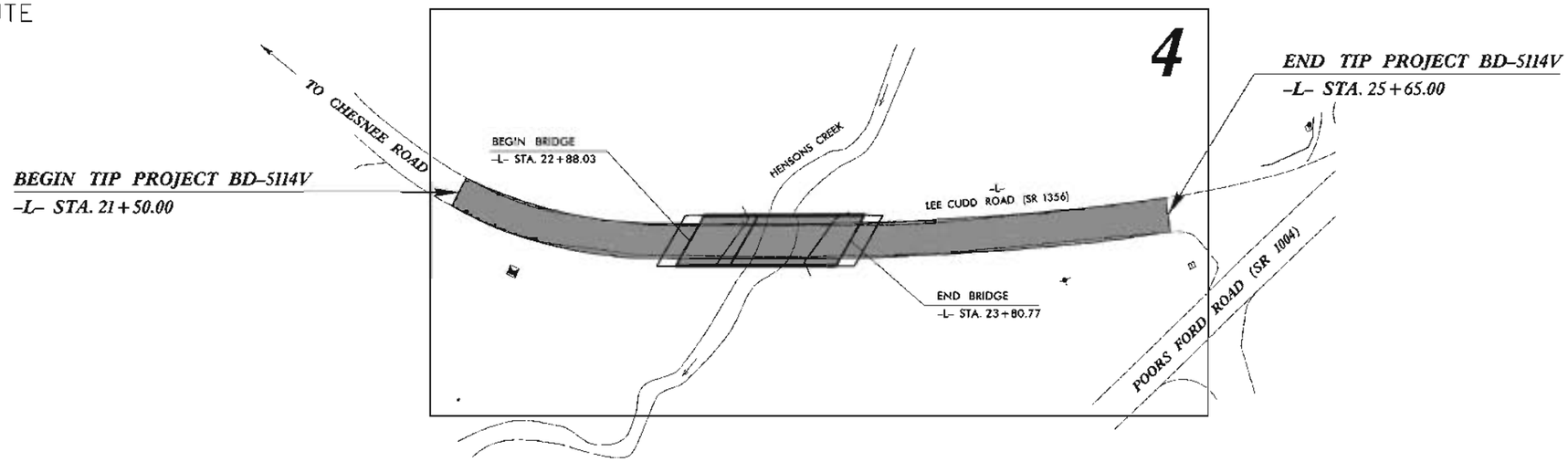

GRAPHIC SCALES

20 10 0 20 40
PLANS

INDEX OF SHEETS

SHEET NO.	DESCRIPTION
UO-1	TITLE SHEET
UO-2	UTILITY BY OTHERS PLAN SHEETS

UTILITY OWNERS ON PROJECT

(1) TELEPHONE - WINDSTREAM COMMUNICATIONS
(2) POWER DISTRIBUTION - RUTHERFORD E.M.C.

SEAL NORTH CAROLINA PROFESSIONAL SEAL 26960 ENGINEER REECE M. SCHULER

V&M
Vaughn & Melton
Consulting Engineers
3089-L Beam Road
Charlotte, NC 28217
704-357-0456

PREPARED IN THE OFFICE OF:
DIVISION OF HIGHWAYS
UTILITIES ENGINEERING SECTION
1591 MAIL SERVICES CENTER
RALEIGH NC 27699-1591
PHONE (919) 250-4128
FAX (919) 250-4119

Roger Worthington, P.E.	UTILITIES SECTION ENGINEER
Xxxxx Xxxxx, P.E.	UTILITIES SQUAD LEADER PROJECT ENGINEER
Reece Schuler, PE	UTILITIES PROJECT DESIGNER

PROJECT REFERENCE NO.	SHEET NO.
BD-5114V	UO-2

UTILITIES BY OTHERS

NOTE:
ALL PROPOSED UTILITY WORK SHOWN ON THIS SHEET WILL BE DONE BY OTHERS

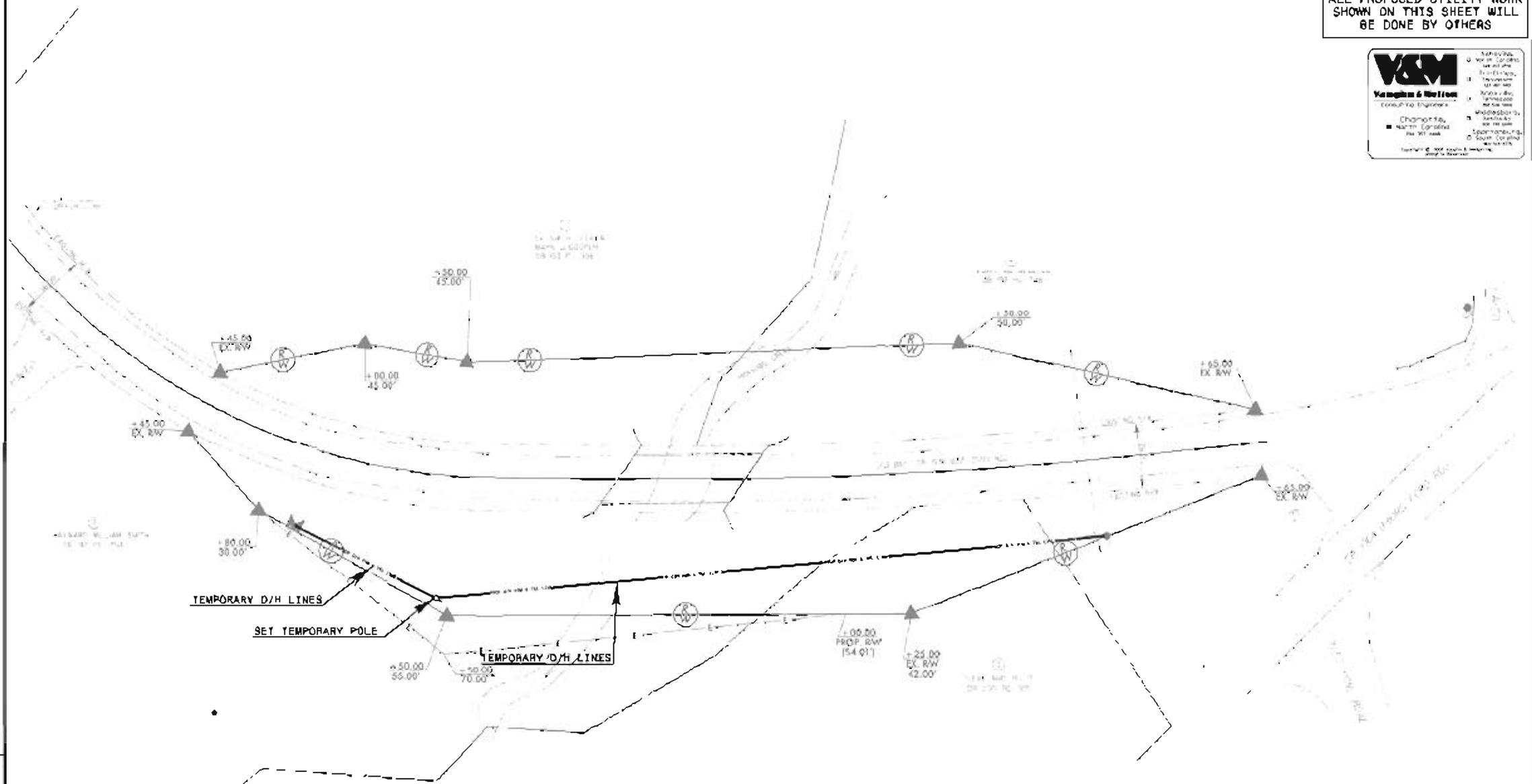

COMPUTED BY: CBC DATE: 01-16-12
CHECKED BY: RMS DATE: 01-16-12

PROJECT REFERENCE NO.	SHEET NO.
BD-5114V	X-0

NORTH CAROLINA PROFESSIONAL SEAL 26560 ENGINEER RECE M. SCHULZ 6/21/12

DIVISION OF HIGHWAYS
STATE OF NORTH CAROLINA

CROSS SECTION SUMMARY

IN CUBIC YARDS

-L- LOCATION	UNCLASSIFIED EXCAVATION	EMBT
21+50	0	0
22+00	59	6
22+50	59	64
22+88.03 BEGIN BRIDGE	0	88
23+80.77 END BRIDGE	2	102
24+00	2	91
24+50	5	253
25+00	0	95
25+50	1	21
25+65	0	1

NOTE: EMBANKMENT COLUMN DOES NOT INCLUDE BACKFILL FOR UNDERCUT.

Approximate quantities only. Unclassified excavation, borrow excavation, fine grading, clearing and grubbing, and removal of existing pavement will be paid for at the contract lump sum price for "grading".

PROJ. REFERENCE NO.	SHEET NO.
BD-5114V	X-1

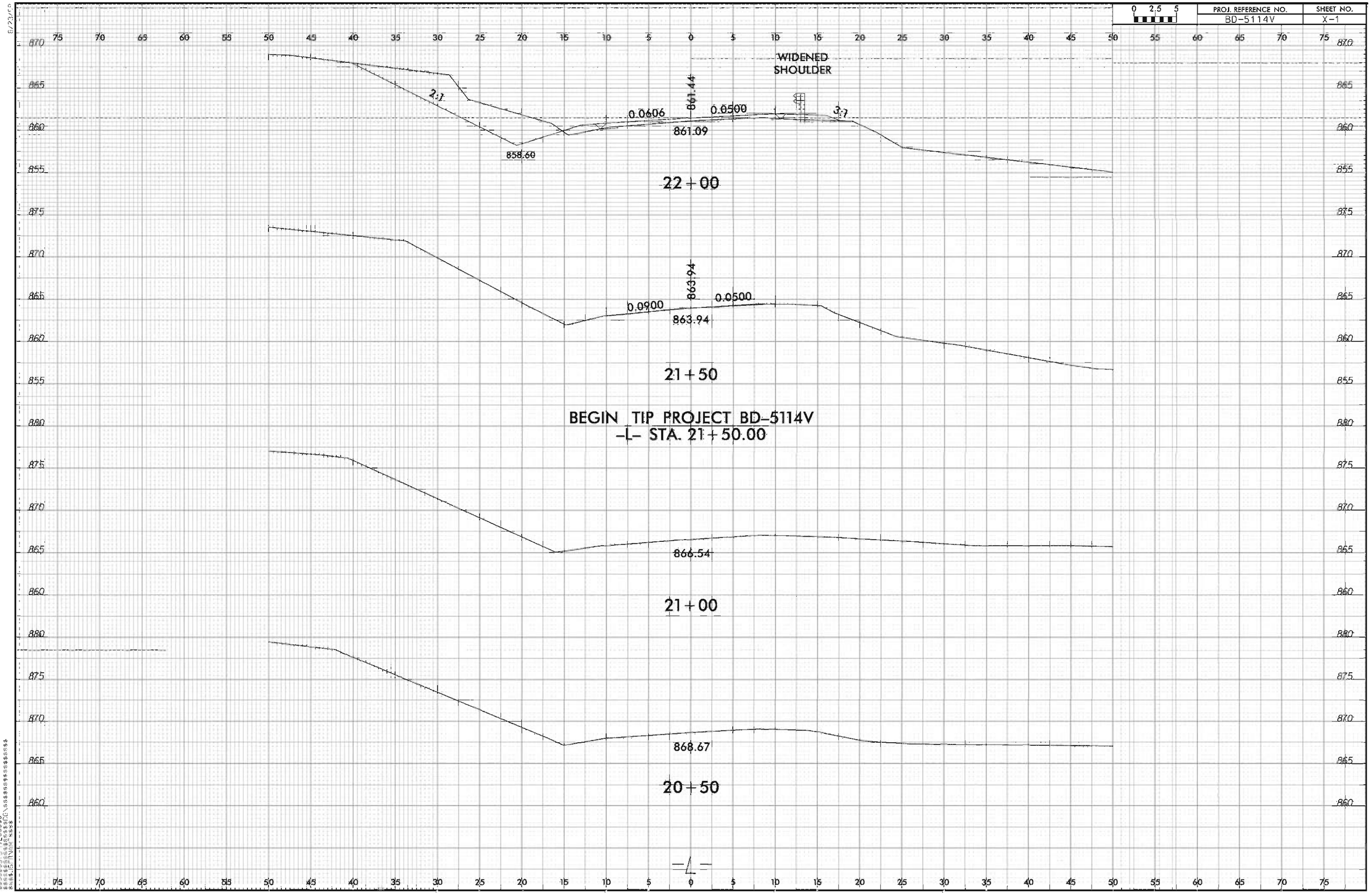

PROJ. REFERENCE NO.	SHEET NO.
BD-5114V	X-2

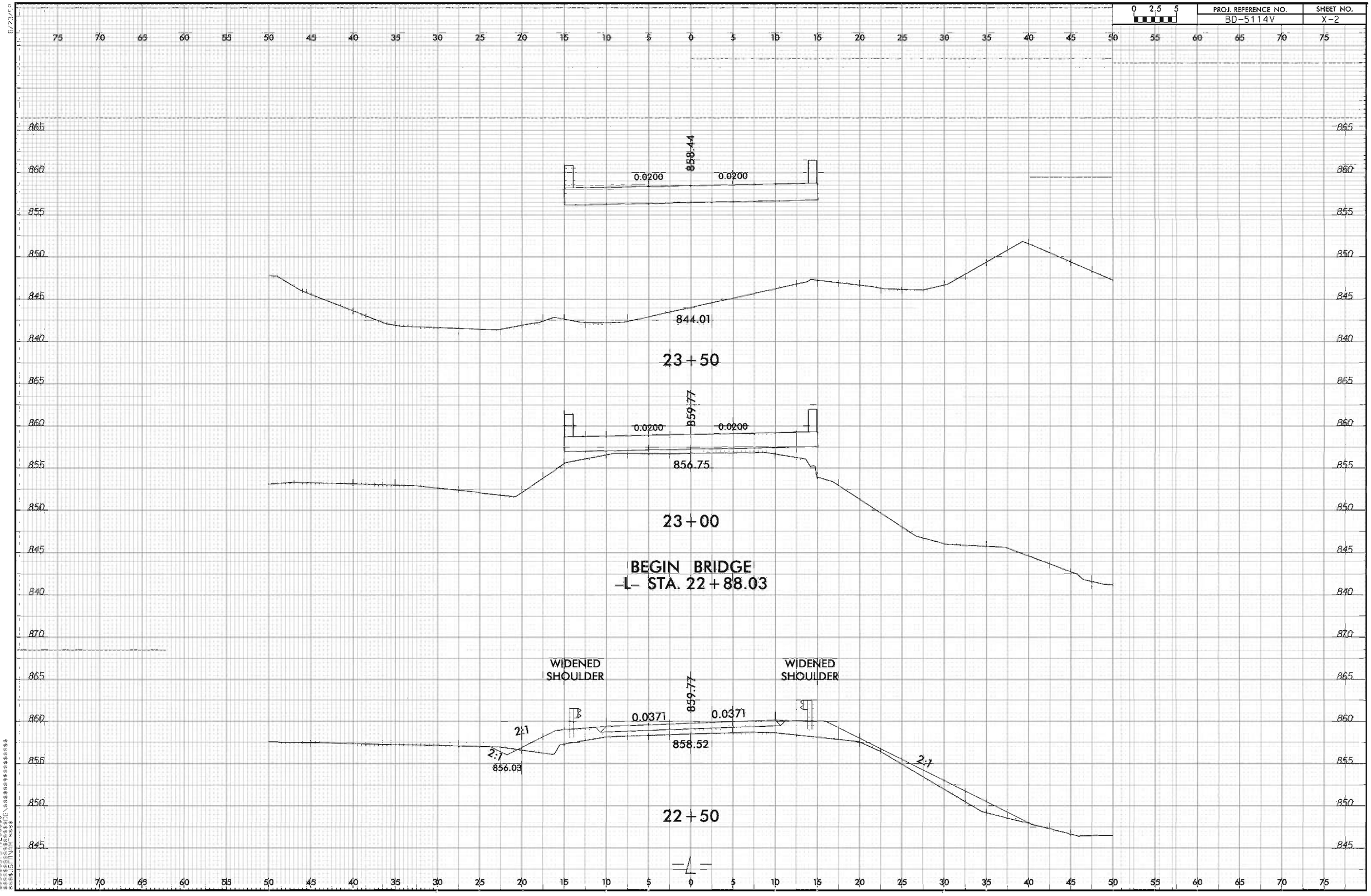

PROJ. REFERENCE NO.	SHEET NO.
BD-5114V	X-3

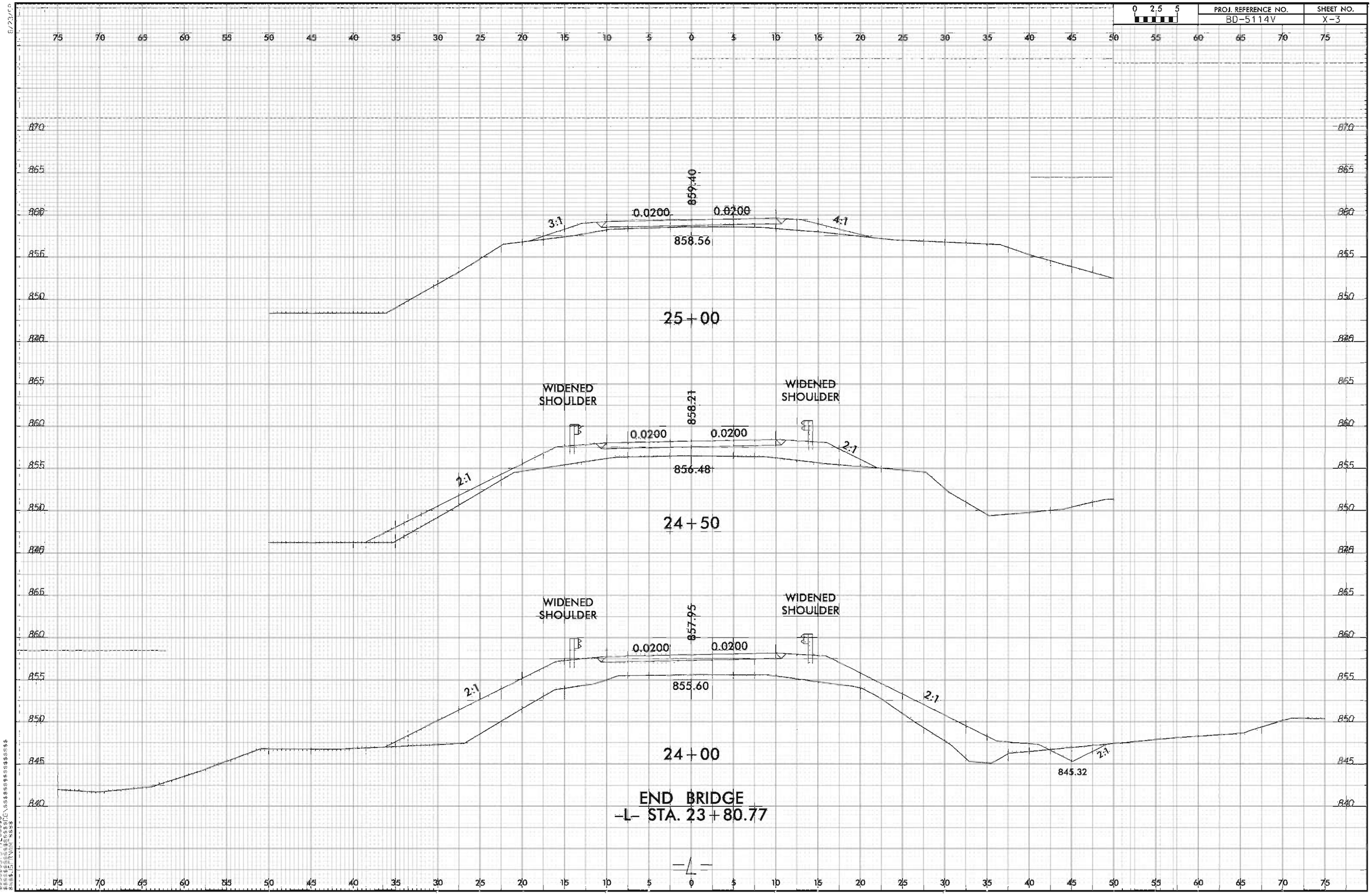

PROJ. REFERENCE NO.	SHEET NO.
BD-5114V	X-4

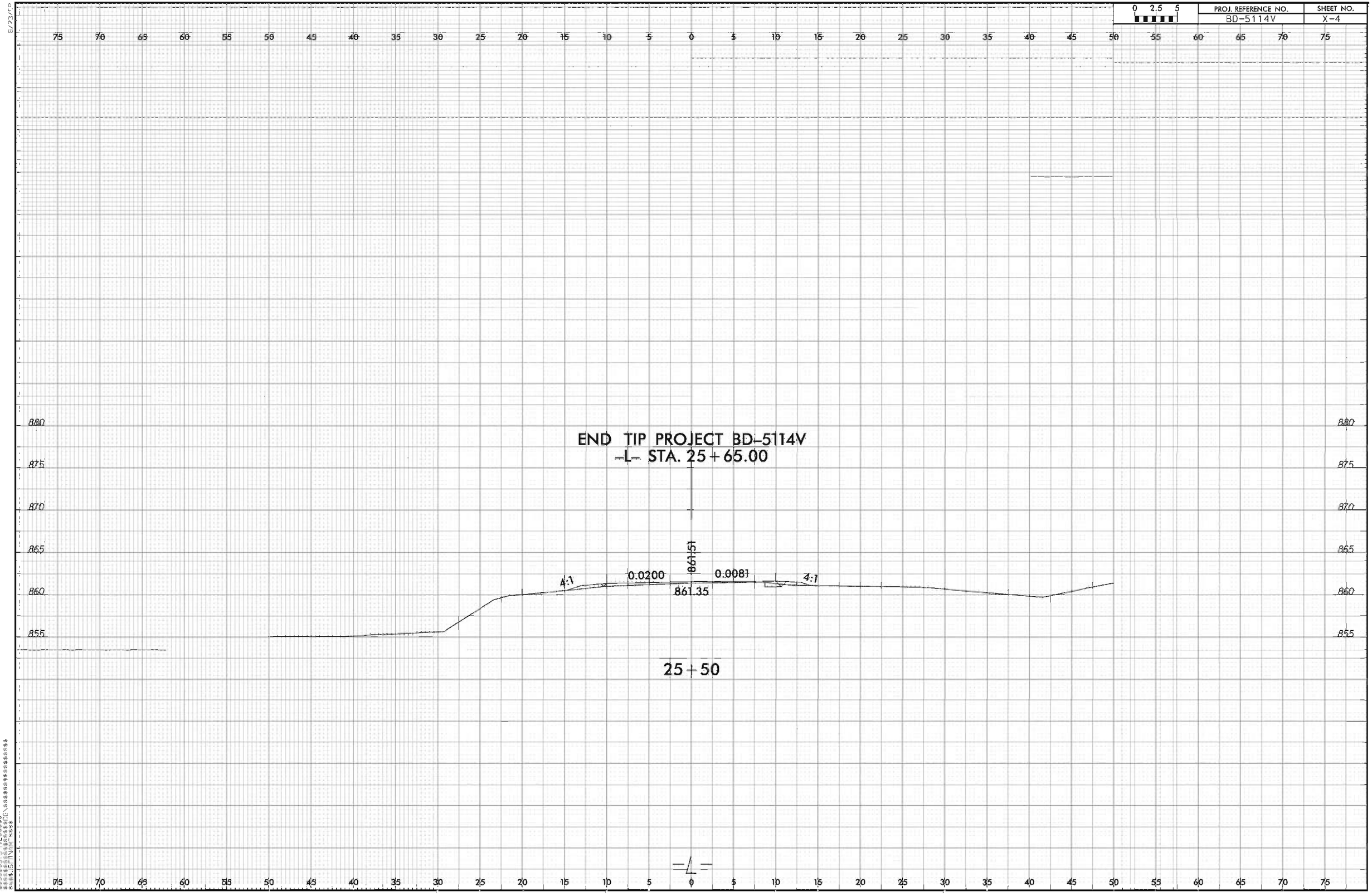

TIP NO: BD-5114V

CONTRACT: DN00089

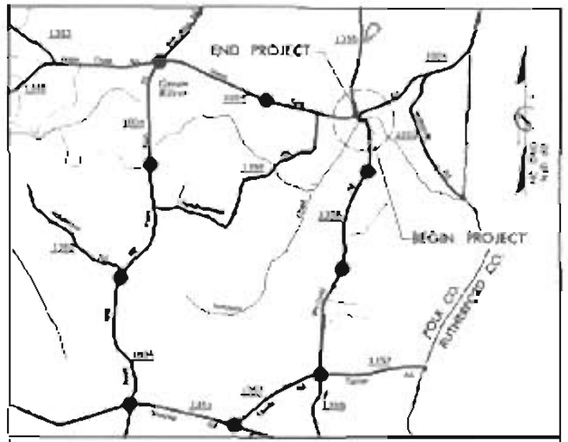

VICINITY MAP

DETOUR ROUTE

STATE OF NORTH CAROLINA

DIVISION OF HIGHWAYS

POLK COUNTY

STATE	STATE PROJECT REFERENCE NO.	SHEET NO.	TOTAL SHEETS
N.C.	BD-5114V		
STATE PROJECT	F.A. PROJECT	DESCRIPTION	
45360.3.22	BRZ-1356(2)	CONST.	

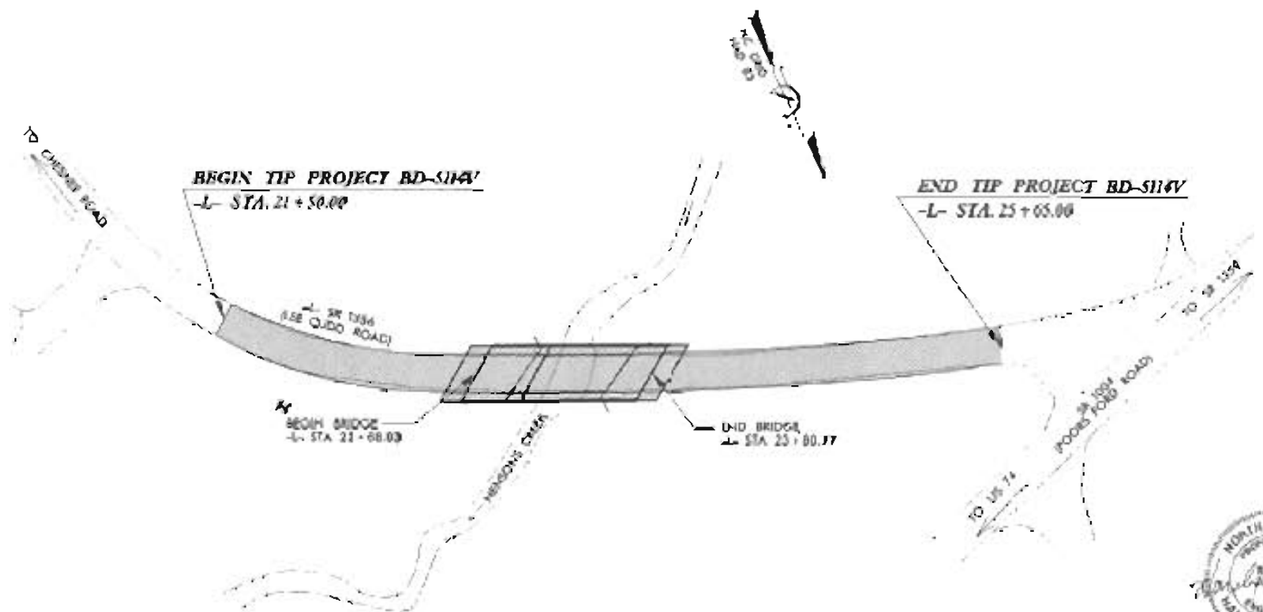

STRUCTURES

V&M Vaughn & Melton

Consulting Engineers

Greenville, South Carolina

Fayetteville, North Carolina

Asheville, North Carolina

Wilmington, North Carolina

Middlesboro, Kentucky

Knoxville, Tennessee

Upper Marlboro, Maryland

NORTH CAROLINA PROFESSIONAL SEAL ENGINEER HARDY L. WILLIS

STATE OF NORTH CAROLINA DEPARTMENT OF TRANSPORTATION

DESIGN DATA

ADT 2008 = 290

ADT 2025 = 580

T = 6 %

V = 55 MPH

FUNC CLASS = LOCAL

PROJECT LENGTH

LENGTH ROADWAY TIP PROJECT BD-5114V = 0.061 MI.

LENGTH STRUCTURE TIP PROJECT BD-5114V = 0.018 MI.

TOTAL LENGTH OF TIP PROJECT BD-5114V = 0.079 MI.

Prepared in the Office of:
VAUGHN & MELTON
1318 FAIRVIEW AVE.
ASHEVILLE, NC 28806
FOR THE NORTH CAROLINA DIVISION OF HIGHWAYS

2012 STANDARD SPECIFICATIONS

LETTING DATE:
JULY 24, 2012

HARDY WILLIS, PE
PROJECT ENGINEER

AARON CARVER, PE
PROJECT DESIGN ENGINEER

STRUCTURES MANAGEMENT UNIT
1000 BIRCH RIDGE DR.
RALEIGH, N.C. 27610

DIVISION OF HIGHWAYS
STATE OF NORTH CAROLINA

JOSH DEYTON P.E.
STATE BRIDGE ENGINEER

DEPARTMENT OF TRANSPORTATION
FEDERAL HIGHWAY ADMINISTRATION

APPROVED
DIVISION ADMINISTRATOR DATE

F. A. PROJECT BRZ-1356(2)

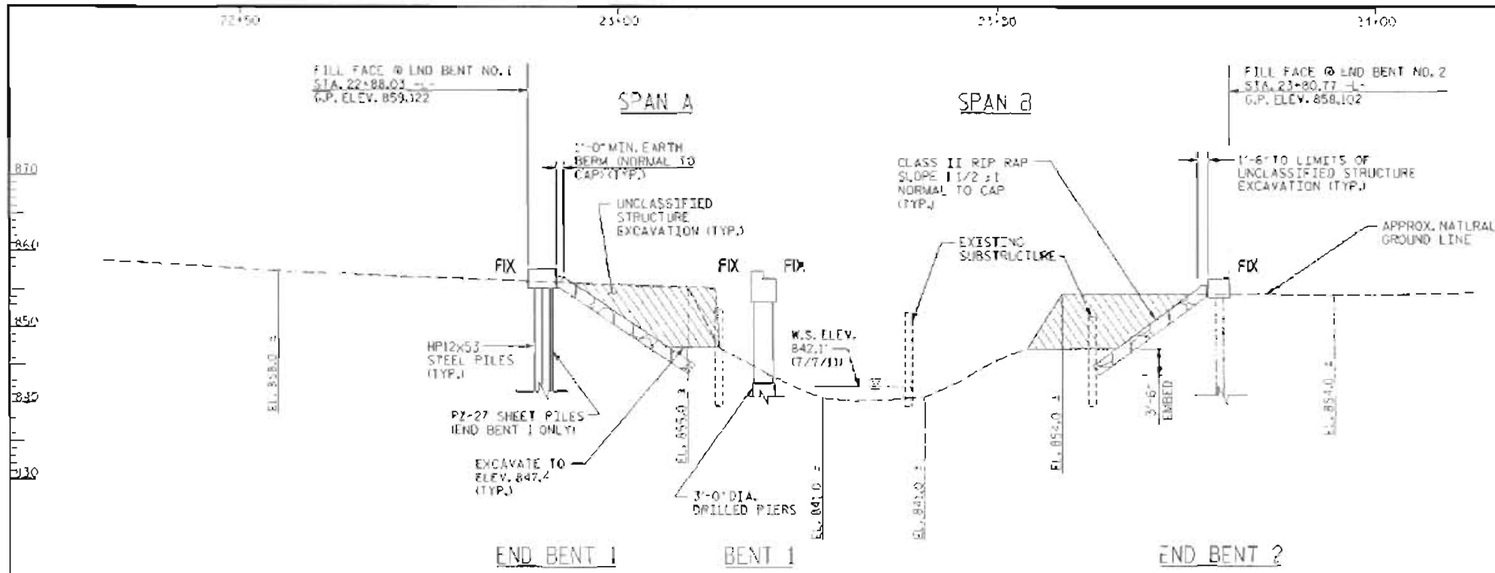

SECTION ALONG ℄ SURVEY -L-

SECTIONS AT END BENTS AND BENT ARE AT RIGHT ANGLES.

GRADE DATA -L-

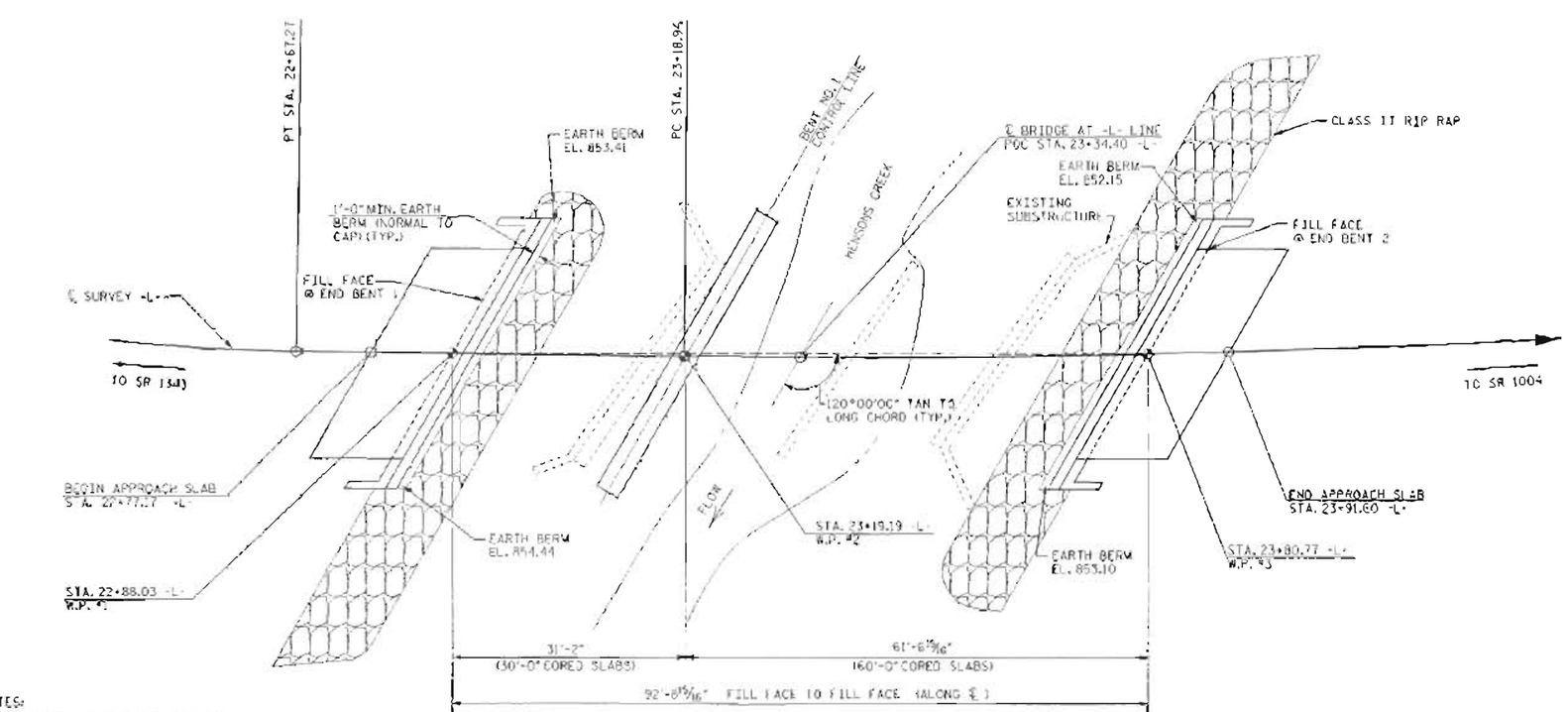

PLAN ALONG ℄ SURVEY -L-

PI Sta 24+29.36
Δ = 7°01'17.4" (LT)
D = 5°10'59.2"
L = 220.59'
T = 110.43'
R = 1000.00'

HORIZONTAL CURVE DATA -L-

NOTES:

END BENTS AND BENT ARE PARALLEL.

PILES NOT SHOWN IN PLAN VIEW FOR CLARITY.

CORED SLABS ARE PARALLEL TO LONG CHORD.

PROJECT NO. BD-5114V

POLK COUNTY

STATION: 23+34.40 -L-

SHEET 1 OF 3 (W.P. ACES BRIDGE NO. 99)

STATE OF NORTH CAROLINA
DEPARTMENT OF TRANSPORTATION
RALEIGH

GENERAL DRAWING

FOR BRIDGE on SR 1356
over HENSONS CREEK
between SR 1343 & SR 1004

Vaughn & Melton Consulting Engineers

DRAWN BY: WCC DATE: MAY 2012
CHECKED BY: HLW DATE: MAY 2012

REVISIONS						SHEET NO.
NO.	BY:	DATE:	NO.	BY:	DATE:	S-1
1			3			TOTAL SHEETS 23
2			4			

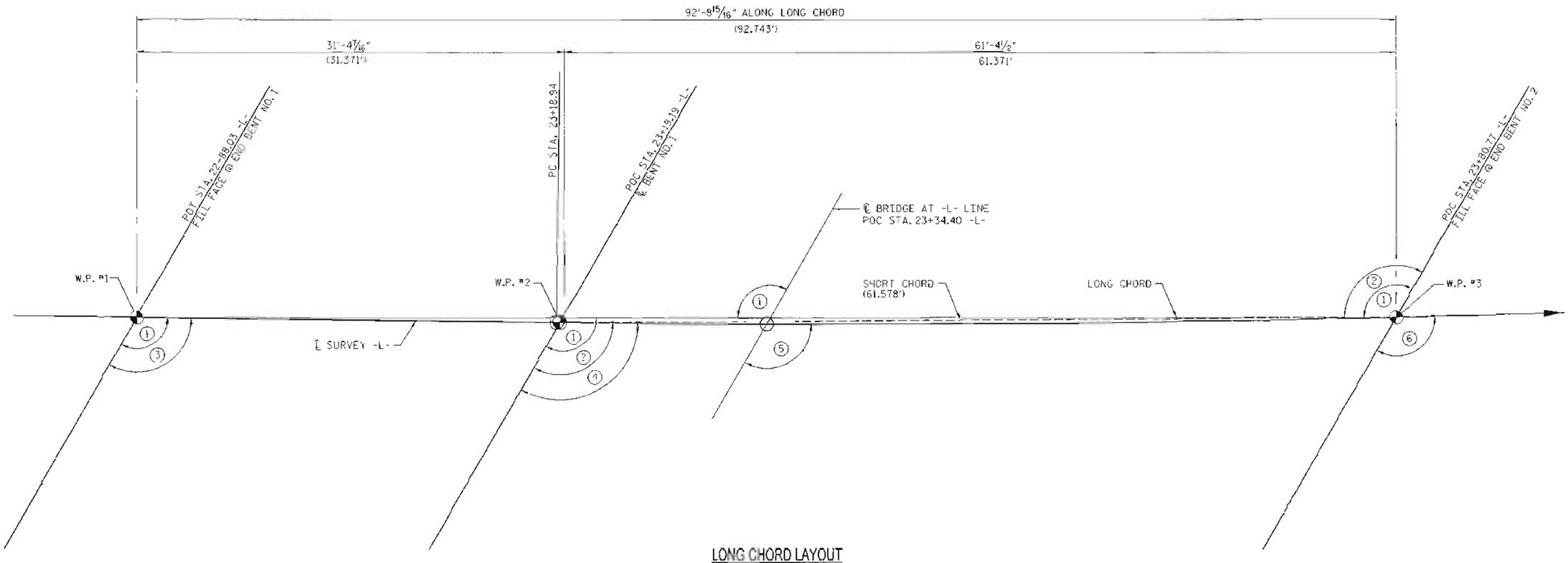

LONG CHORD LAYOUT

END BENTS AND BENT ARE PARALLEL.

① 120°00'00" TO LONG CHORD

② 120°19'55" TO SHORT CHORD

③ 119°20'38" TO ℄ SURVEY -L-

④ 119°21'07" TAN TO CURVE, ℄ SURVEY -L-

⑤ 119°50'10" TAN TO CURVE, ℄ SURVEY -L-

⑥ 121°18'44" TAN TO CURVE, ℄ SURVEY -L-

PI Sta 24+29.39
Δ = 7°01'17.4" (LT)
D = 3°10'59.2"
L = 220.59'
T = 110.43'
R = 1800.00'

HORIZONTAL CURVE DATA -L-

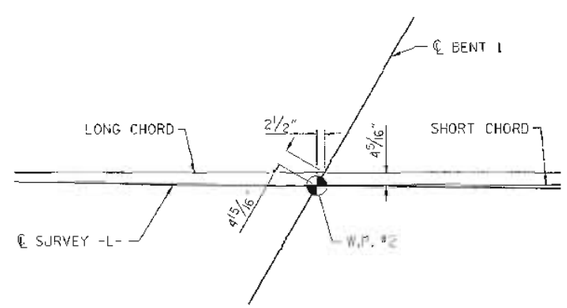

W.P. 2

NORTH CAROLINA PROFESSIONAL SEAL ENGINEER HARDY L. WILLIS 6/26/12

PROJECT NO. BD-5114V

POLK COUNTY

STATION: 23+34.40 -L-

SHEET 2 OF 3

STATE OF NORTH CAROLINA
DEPARTMENT OF TRANSPORTATION
RALEIGH

GENERAL DRAWING

FOR BRIDGE on SR 1356
over HENSONS CREEK
between SR 1343 & SR 1004

Vaughn & Melton Consulting Engineers

DRAWN BY: WCC DATE: MAY 2012
CHECKED BY: HLW DATE: MAY 2012

REVISIONS

NO.	BY:	DATE:	NO.	BY:	DATE:
1			3		
2			4		

SHEET NO. S-2

TOTAL SHEETS 23

BL-2 N 554764.0048 E 1111294.9894 ELEV. = 855.20 -L- STATION 23+65.06 13.26' RT

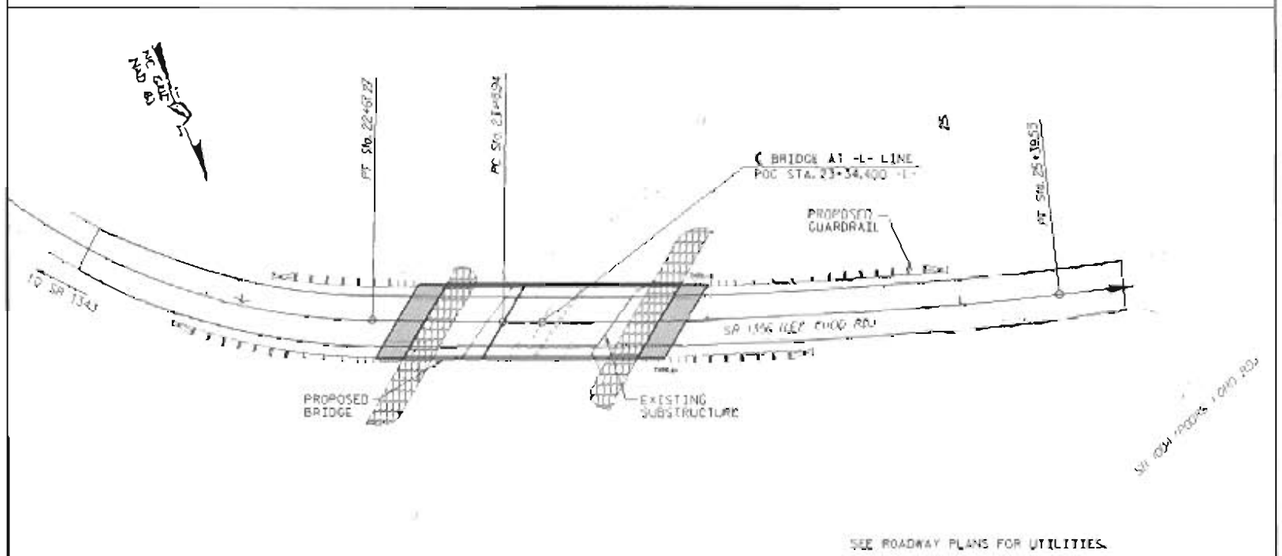

LOCATION SKETCH

GENERAL NOTES:

ASSUMED LIVE LOAD = HL-93 OR ALTERNATE LOADING.

THIS BRIDGE HAS BEEN DESIGNED IN ACCORDANCE WITH THE REQUIREMENTS OF THE AASHTO LRFD BRIDGE DESIGN SPECIFICATIONS.

FOR OTHER DESIGN DATA AND GENERAL NOTES, SEE "STANDARD NOTES" SHEET.

FOR EROSION CONTROL MEASURES, SEE EROSION CONTROL PLANS.

THE EXISTING STRUCTURE, CONSISTING OF A TWO SPAN, 50-FOOT LONG TIMBER DECK ON STEEL I-BEAMS, 20-FEET WIDE, ON TIMBER CAP AND PILE END BENTS AND BENTS, AND LOCATED AT THE PROPOSED STRUCTURE, SHALL BE REMOVED. THE EXISTING BRIDGE IS PRESENTLY POSTED BELOW THE LEGAL LOAD LIMIT. SHOULD THE STRUCTURAL INTEGRITY OF THE BRIDGE FURTHER DETERIORATE, THIS LOAD LIMITATION MAY BE REDUCED AS FOUND NECESSARY DURING THE LIFE OF THE PROJECT.

REMOVAL OF THE EXISTING BRIDGE SHALL BE PERFORMED SO AS NOT TO ALLOW DEBRIS TO FALL INTO THE WATER. THE CONTRACTOR SHALL REMOVE THE BRIDGE AND SUBMIT PLANS FOR DEMOLITION IN ACCORDANCE WITH ARTICLE 402-2 OF THE STANDARD SPECIFICATIONS.

THE SUBSTRUCTURE OF THE EXISTING BRIDGE INDICATED ON THE PLANS IS FROM THE BEST INFORMATION AVAILABLE. SINCE THIS INFORMATION IS SHOWN FOR THE CONVENIENCE OF THE CONTRACTOR, THE CONTRACTOR SHALL HAVE NO CLAIM WHATSOEVER AGAINST THE DEPARTMENT OF TRANSPORTATION FOR ANY DELAYS OR ADDITIONAL COST INCURRED BASED ON DIFFERENCES BETWEEN THE EXISTING BRIDGE SUBSTRUCTURE SHOWN ON THE PLANS AND THE ACTUAL CONDITIONS AT THE PROJECT SITE.

THIS STRUCTURE HAS BEEN DESIGNED IN ACCORDANCE WITH HEC 18, "EVALUATING SCOUR AT BRIDGES", MAY 2001.

FOR SUBMITTAL OF WORKING DRAWINGS, SEE SPECIAL PROVISIONS.

FOR FALSEWORK AND FORMWORK, SEE SPECIAL PROVISIONS.

FOR CRANE SAFETY, SEE SPECIAL PROVISIONS.

FOR GROUT FOR STRUCTURES, SEE SPECIAL PROVISIONS.

THE MATERIAL SHOWN IN THE CROSS-HATCHED AREA SHALL BE EXCAVATED FOR A DISTANCE OF 25 FT. EACH SIDE OF CENTERLINE ROADWAY AS DIRECTED BY THE ENGINEER. THIS WORK WILL BE PAID FOR AT THE CONTRACT LUMP SUM PRICE FOR UNCLASSIFIED STRUCTURE EXCAVATION. SEE SECTION 412 OF THE STANDARD SPECIFICATIONS.

ASPHALT WEARING SURFACE IS INCLUDED IN ROADWAY QUANTITY ON ROADWAY PLANS.

THIS BRIDGE IS LOCATED IN SEISMIC ZONE 1.

THE CONTRACTOR SHALL PROVIDE INDEPENDENT ASSURANCE SAMPLES OF REINFORCING STEEL AS FOLLOWS: FOR PROJECTS REQUIRING UP TO 400 TONS OF REINFORCING STEEL, ONE 30 INCH SAMPLE OF EACH SIZE BAR USED. THE BARS FROM WHICH THE SAMPLES ARE TAKEN MUST THEN BE SPLICED WITH REPLACEMENT BARS OF THE SIZE AND LENGTH OF THE SAMPLE, PLUS A MINIMUM LAP SPLICE OF 30 BAR DIAMETERS. PAYMENT FOR THE SAMPLES OF REINFORCING STEEL SHALL BE CONSIDERED INCIDENTAL TO VARIOUS PAY ITEMS.

INASMUCH AS THE PAINT SYSTEM ON THE EXISTING STRUCTURAL STEEL CONTAINS LEAD, THE CONTRACTOR'S ATTENTION IS DIRECTED TO ARTICLE 107-1 OF THE STANDARD SPECIFICATIONS. ANY COSTS RESULTING FROM COMPLIANCE WITH APPLICABLE STATE OR FEDERAL REGULATIONS PERTAINING TO HANDLING OF MATERIALS CONTAINING LEAD BASED PAINT SHALL BE INCLUDED IN THE BID PRICE FOR "REMOVAL OF EXISTING STRUCTURE AT STATION 23+34.40."

FOR PILES, SEE SECTION 450 OF THE STANDARD SPECIFICATIONS.

PILES AT END BENT NO. 1 ARE DESIGNED FOR A FACTORED RESISTANCE OF 85 TONS PER PILE.

DRIVE PILES AT END BENT NO. 1 TO A REQUIRED DRIVING RESISTANCE OF 110 TONS PER PILE.

THE SCOUR CRITICAL ELEVATION FOR END BENT NO. 1 IS ELEVATION 850.0 FT. THE SCOUR CRITICAL ELEVATIONS ARE USED TO MONITOR POSSIBLE SCOUR PROBLEMS DURING THE LIFE OF THE STRUCTURE.

FOR DRILLED PIERS, SEE SECTION 411 OF THE STANDARD SPECIFICATIONS.

DRILLED PIERS AT BENT NO. 1 ARE DESIGNED FOR A FACTORED RESISTANCE OF 355.0 TONS PER PIER. CHECK FIELD CONDITIONS FOR THE REQUIRED TIP RESISTANCE OF 60.0 TSF.

PERMANENT STEEL CASINGS MAY BE REQUIRED FOR DRILLED PIERS AT BENT NO. 1. IF REQUIRED, DO NOT EXTEND PERMANENT CASINGS BELOW ELEVATION 834.0 FT. WITHOUT PRIOR APPROVAL FROM THE ENGINEER. THE ENGINEER WILL DETERMINE THE NEED FOR PERMANENT STEEL CASINGS.

INSTALL DRILLED PIERS AT BENT NO. 1 THAT EXTEND TO AN ELEVATION NO HIGHER THAN 809.0 FT. SATISFY THE REQUIRED TIP RESISTANCE AND HAVE A PENETRATION OF AT LEAST 6 FT. INTO ROCK AS DEFINED BY ARTICLE 411-1 OF THE STANDARD SPECIFICATIONS.

THE SCOUR CRITICAL ELEVATION FOR BENT NO. 1 IS ELEVATION 823.0 FT. THE SCOUR CRITICAL ELEVATIONS ARE USED TO MONITOR POSSIBLE SCOUR PROBLEMS DURING THE LIFE OF THE STRUCTURE.

SID INSPECTIONS MAY BE REQUIRED FOR DRILLED PIERS. THE ENGINEER WILL DETERMINE THE NEED FOR SID INSPECTIONS. FOR SID INSPECTIONS, SEE SECTION 411 OF THE STANDARD SPECIFICATIONS.

CSL TUBES ARE REQUIRED AND CSL TESTING MAY BE REQUIRED FOR THE DRILLED PIERS. THE ENGINEER WILL DETERMINE THE NEED FOR CSL TESTING. FOR CSL TESTING, SEE SECTION 411 OF THE STANDARD SPECIFICATIONS.

SPT MAY BE REQUIRED FOR DRILLED PIERS. THE ENGINEER WILL DETERMINE THE NEED FOR SPT. FOR SPT TESTING, SEE SECTION 411 OF THE STANDARD SPECIFICATIONS.

PILES AT END BENT NO. 2 ARE DESIGNED FOR A FACTORED RESISTANCE OF 90 TONS PER PILE.

DRIVE PILES AT END BENT NO. 2 TO A REQUIRED DRIVING RESISTANCE OF 150 TONS PER PILE.

PZ-27 SHEET PILES SHALL BE PLACED IN FRONT OF 12X53 HP PILES AT END BENT NO. 1.

SHEET PILES SHALL BE INSTALLED TO AN ELEVATION OF 850.0 FT. AT END BENT NO. 1 TO ACCOUNT FOR THE SCOUR IMPACT AT END BENT NO. 1.

UNCLASSIFIED EXCAVATION IS REQUIRED AT END BENT NO. 1 TO REMOVE SAND AND GRAVEL FOR THE INSTALLATION OF THE PILES AND SHEET PILES. THE ESTIMATED QUANTITY OF UNCLASSIFIED EXCAVATION IS 120 CUBIC YARDS.

FOR SHEET PILES, SEE SPECIAL PROVISIONS.

TOTAL BILL OF MATERIAL

	REMOVAL OF EXISTING STRUCTURE	3'-0"Ø DRILLED PIERS IN SOIL	3'-0"Ø DRILLED PIERS NOT IN SOIL	PERMANENT STEEL CASING FOR 3'-0"Ø DRILLED PIERS	CSL TESTING	SID INSPECTION	SPT TESTING	UNCLASSIFIED STRUCTURE EXCAVATION	CLASS A CONCRETE	BRIDGE APPROACH SLABS	REINFORCING STEEL	SPIRAL COLUMN REINFORCING STEEL	HP 12 X 53 STEEL PILES		18" STEEL SHEET PILES	VERTICAL CONCRETE BARRIER RAIL	RIP RAP CLASS II (2'-0" THICK)	GEOTEXTILE FOR DRAINAGE	ELASTOMERIC BEARINGS	2'-0" x 1'-9" PRESTRESSED CONCRETE CORED SLAB UNIT		2'-0" x 2'-0" PRESTRESSED CONCRETE CORED SLAB UNIT	
	LUMP SUM	LIN. FT.	LIN. FT.	LIN. FT.	EACH	EACH	EACH	LUMP SUM	CU. YARDS	LUMP SUM	LBS.	LBS.	NO.	LIN. FT.	SQ. FT.	LIN. FT.	TONS	SQ. YARDS	LUMP SUM	NO.	LIN. FT.	NO.	LIN. FT.
SUPERSTRUCTURE																180.58			LUMP SUM	10	300.0	10	600.0
END BENT 1									22.8		2762		5	175	360		145	160					
BENT 1		71.0	54.0	33.0	1	1	1		13.9		12,696	2319											
END BENT 2									14.8		2206		5	200			120	135					
TOTAL	LUMP SUM	71.0	54.0	33.0	1	1	1	LUMP SUM	51.5	LUMP SUM	17,664	2319	10	375	360	180.58	265	295	LUMP SUM	10	300.0	10	600.0

HYDRAULIC DATA

DESIGN DISCHARGE	= 904 CFS
DESIGN FREQUENCY	= 25 YRS
DESIGN HW ELEVATION	= 847.65 FT
BASE DISCHARGE	= 1290 CFS
BASE FREQUENCY	= 100 YRS
BASE HW ELEVATION	= 848.72 FT

OVERTOPPING FLOOD DATA

OVERTOPPING DISCHARGE	= 6800 CFS
OVERTOPPING FREQUENCY	= 500+ YRS
OVERTOPPING ELEVATION	= 859.05 FT
DRAINAGE AREA	= 2.36 SQ. MI.

PROJECT NO. BD-5114V

POLK COUNTY

STATION: 23+34.40 -L-

SHEET 3 OF 3

STATE OF NORTH CAROLINA
DEPARTMENT OF TRANSPORTATION
RALEIGH

GENERAL DRAWING

FOR BRIDGE on SR 1356
over HENSONS CREEK
between SR 1343 & SR 1004

NORTH CAROLINA PROFESSIONAL SEAL ENGINEER HARDY L. WILLIS

V&M Vaughn & Melton Consulting Engineers

DRAWN BY: WCC DATE: MAY 2012
CHECKED BY: HLW DATE: MAY 2012

REVISIONS						SHEET NO.
NO.	BY	DATE	NO.	BY	DATE	S-3
1			3			TOTAL SHEETS 23
2			4			

LOAD AND RESISTANCE FACTOR RATING (LRFD) SUMMARY FOR PRESTRESSED CONCRETE GIRDERS

LEVEL		VEHICLE	WEIGHT (W) (TONS)	CONTROLLING LOAD RATING	MINIMUM RATING FACTORS (RF)	TONS = W X RF	STRENGTH I LIMIT STATE											SERVICE III LIMIT STATE						COMMENT NUMBER
								MOMENT					SHEAR						MOMENT					
							LIVELOAD FACTORS	DISTRIBUTION FACTORS (DF)	RATING FACTOR	SPAN	GIRDER LOCATION	DISTANCE FROM LEFT END OF SPAN (ft)	DISTRIBUTION FACTORS (DF)	RATING FACTOR	SPAN	GIRDER LOCATION	DISTANCE FROM LEFT END OF SPAN (ft)	LIVELOAD FACTORS	DISTRIBUTION FACTORS (DF)	RATING FACTOR	SPAN	GIRDER LOCATION	DISTANCE FROM LEFT END OF SPAN (ft)	
DESIGN LOAD RATING		HL-93(Inv)	N/A	(1)	1.202	--	1.75	0.256	2.04	30'	EL	14.423	0.655	**1.2**	30'	EL	**1.442**	0.80	0.256	1.75	30'	EL	14.423	
		HL-93(Opr)	N/A	--	1.558	--	1.35	0.256	2.64	30'	EL	14.423	0.655	1.56	30'	EL	1.442	N/A	--	--	--	--	--	
		HS-20(Inv)	36.000	(2)	1.365	49.124	1.75	0.256	2.82	30'	EL	11.538	0.655	**1.36**	30'	EL	**1.442**	0.80	0.256	2.45	30'	EL	11.538	
		HS-20(Opr)	36.000	--	1.769	63.679	1.35	0.256	3.65	30'	EL	11.538	0.655	1.77	30'	EL	1.442	N/A	--	--	--	--	--	
LEGAL LOAD RATING	SV	SNSH	13.500	--	3.333	45.002	1.4	0.256	5.76	30'	EL	14.423	0.655	3.33	30'	EL	1.442	0.80	0.256	3.95	30'	EL	14.423	
		SNGARBS2	20.000	--	2.581	51.624	1.4	0.256	5.04	30'	EL	11.538	0.655	2.58	30'	EL	1.442	0.80	0.256	3.50	30'	EL	11.538	
		SNAGRIS2	22.000	--	2.487	54.723	1.4	0.256	5.13	30'	EL	11.538	0.655	2.49	30'	EL	1.442	0.80	0.256	3.56	30'	EL	11.538	
		SNCOTTS3	27.250	--	1.684	45.891	1.4	0.256	2.89	30'	EL	14.423	0.655	1.68	30'	EL	1.442	0.80	0.256	1.99	30'	EL	14.423	
		SNAGGRS4	34.925	--	1.551	54.185	1.4	0.256	2.79	30'	EL	14.423	0.655	1.55	30'	EL	1.442	0.80	0.256	1.91	30'	EL	14.423	
		SNS5A	35.550	--	1.645	58.469	1.4	0.256	2.7	30'	EL	14.423	0.655	1.64	30'	EL	1.442	0.80	0.256	1.85	30'	EL	14.423	
		SNS6A	39.950	--	1.547	61.791	1.4	0.256	2.55	30'	EL	14.423	0.655	1.55	30'	EL	1.442	0.80	0.256	1.75	30'	EL	14.423	
		SNS7B	42.000	--	1.578	66.285	1.4	0.256	2.48	30'	EL	14.423	0.655	1.58	30'	EL	1.442	0.80	0.256	1.70	30'	EL	14.423	
	TTST	TNAGRIT3	33.000	--	1.838	60.67	1.4	0.256	3.31	30'	EL	14.423	0.655	1.84	30'	EL	1.442	0.80	0.256	2.27	30'	EL	14.423	
		TNT4A	33.075	--	1.71	56.559	1.4	0.256	3.13	30'	EL	14.423	0.655	1.71	30'	EL	1.442	0.80	0.256	2.15	30'	EL	14.423	
		TNT6A	41.600	--	1.652	68.714	1.4	0.256	2.85	30'	EL	14.423	0.655	1.65	30'	EL	1.442	0.80	0.256	1.96	30'	EL	14.423	
		TNT7A	42.000	--	1.573	66.067	1.4	0.256	2.94	30'	EL	14.423	0.655	1.57	30'	EL	1.442	0.80	0.256	2.02	30'	EL	14.423	
		TNT7B	42.000	--	1.536	64.525	1.4	0.256	2.77	30'	EL	14.423	0.655	1.54	30'	EL	1.442	0.80	0.256	1.90	30'	EL	14.423	
		TNAGRIT4	43.000	--	1.486	63.9	1.4	0.256	2.87	30'	EL	14.423	0.655	1.49	30'	EL	1.442	0.80	0.256	1.97	30'	EL	14.423	
		TNAGT5A	45.000	--	1.594	71.736	1.4	0.256	2.79	30'	EL	14.423	0.655	1.59	30'	EL	1.442	0.80	0.256	1.92	30'	EL	14.423	
		TNAGT5B	45.000	(3)	1.399	62.946	1.4	0.256	2.68	30'	EL	11.538	0.655	**1.4**	30'	EL	**1.442**	0.80	0.256	1.85	30'	EL	11.538	

LOAD FACTORS:

DESIGN LOAD RATING FACTORS	LIMIT STATE	γ_{DC}	γ_{DW}
	STRENGTH I	1.25	1.50
	SERVICE III	1.00	1.00

NOTES:

MINIMUM RATING FACTORS ARE BASED ON THE STRENGTH I AND SERVICE III LIMIT STATES.

ALLOWABLE STRESSES FOR SERVICE III LIMIT STATE ARE AS REQUIRED FOR DESIGN.

COMMENTS:

1.
2.
3.
4.

(#) CONTROLLING LOAD RATING

(1) DESIGN LOAD RATING (HL-93)

(2) DESIGN LOAD RATING (HS-20)

(3) LEGAL LOAD RATING **

** SEE CHART FOR VEHICLE TYPE

GIRDER LOCATION

I - INTERIOR GIRDER
EL - EXTERIOR LEFT GIRDER
ER - EXTERIOR RIGHT GIRDER

LRFR SUMMARY

FOR SPAN A

PROJECT NO. BD-5114V

POLK COUNTY

STATION: 23+34.40 -L-

SHEET 1 OF 2

STATE OF NORTH CAROLINA
DEPARTMENT OF TRANSPORTATION
RALEIGH

STANDARD
LRFR SUMMARY FOR
30' CORED SLAB UNIT
60° SKEW & 120° SKEW
(NON-INTERSTATE TRAFFIC)

NORTH CAROLINA PROFESSIONAL SEAL 15779 ENGINEER JOHN R. DUGGINS, JR.

5/10/12

REVISIONS						SHEET NO.
NO.	BY:	DATE:	NO.	BY:	DATE:	S-4
1			3			TOTAL SHEETS
2			4			23

ASSEMBLED BY :	A. SORSENGINH	DATE :	11/14/2011
CHECKED BY :	B. MATHEW	DATE :	11/28/2011
DRAWN BY :	CVC	6/10	
CHECKED BY :	DNS	6/10	

10-MAY-2012 10:16
S:\DPG4\John\LIBR.Files\BD-5114V\Final_Plans\BD-5114V_SD_LRFR.dgn
jduggins

LOAD AND RESISTANCE FACTOR RATING (LRFD) SUMMARY FOR PRESTRESSED CONCRETE GIRDERS

LEVEL		VEHICLE	WEIGHT (W) (TONS)	CONTROLLING LOAD RATING	MINIMUM RATING FACTORS (RF)	TONS = W X RF	STRENGTH I LIMIT STATE											SERVICE III LIMIT STATE						COMMENT NUMBER
								MOMENT					SHEAR						MOMENT					
							LIVELOAD FACTORS	DISTRIBUTION FACTORS (DF)	RATING FACTOR	SPAN	GIRDER LOCATION	DISTANCE FROM LEFT END OF SPAN (ft)	DISTRIBUTION FACTORS (DF)	RATING FACTOR	SPAN	GIRDER LOCATION	DISTANCE FROM LEFT END OF SPAN (ft)	LIVELOAD FACTORS	DISTRIBUTION FACTORS (DF)	RATING FACTOR	SPAN	GIRDER LOCATION	DISTANCE FROM LEFT END OF SPAN (ft)	
DESIGN LOAD RATING		HL-93(Inv)	N/A	1	1.133	--	1.75	0.249	1.48	60'	EL	29.423	0.649	**1.13**	60'	EL	**5.885**	0.80	0.249	1.52	60'	EL	29.423	
		HL-93(Opr)	N/A	--	1.468	--	1.35	0.249	1.91	60'	EL	29.423	0.649	1.47	60'	EL	5.885	N/A	--	--	--	--	--	
		HS-20(Inv)	36.000	2	1.364	49.098	1.75	0.249	1.87	60'	EL	29.423	0.649	**1.36**	60'	EL	**5.885**	0.80	0.249	1.92	60'	EL	29.423	
		HS-20(Opr)	36.000	--	1.768	63.645	1.35	0.249	2.42	60'	EL	29.423	0.649	1.77	60'	EL	5.885	N/A	--	--	--	--	--	
LEGAL LOAD RATING	SV	SNSH	13.500	--	3.938	53.159	1.4	0.249	5.03	60'	EL	29.423	0.649	3.94	60'	EL	5.885	0.80	0.249	4.13	60'	EL	29.423	
		SNGARBS2	20.000	--	2.837	56.744	1.4	0.249	3.85	60'	EL	29.423	0.649	2.84	60'	EL	5.885	0.80	0.249	3.17	60'	EL	29.423	
		SNAGRIS2	22.000	--	2.648	58.256	1.4	0.249	3.69	60'	EL	29.423	0.649	2.65	60'	EL	5.885	0.80	0.249	3.03	60'	EL	29.423	
		SNCOTTS3	27.250	--	1.97	53.671	1.4	0.249	2.5	60'	EL	29.423	0.649	1.97	60'	EL	5.885	0.80	0.249	2.06	60'	EL	29.423	
		SNAGGRS4	34.925	--	1.661	58.001	1.4	0.249	2.13	60'	EL	29.423	0.649	1.66	60'	EL	5.885	0.80	0.249	1.75	60'	EL	29.423	
		SNS5A	35.550	--	1.696	60.293	1.4	0.249	2.08	60'	EL	29.423	0.649	1.7	60'	EL	5.885	0.80	0.249	1.71	60'	EL	29.423	
		SNS6A	39.950	--	1.558	62.257	1.4	0.249	1.93	60'	EL	29.423	0.649	1.56	60'	EL	5.885	0.80	0.249	1.58	60'	EL	29.423	
		SNS7B	42.000	--	1.51	63.41	1.4	0.249	1.84	60'	EL	29.423	0.649	1.55	60'	EL	5.885	0.80	0.249	1.51	60'	EL	29.423	
	TTST	TNAGRIT3	33.000	--	1.846	60.907	1.4	0.249	2.36	60'	EL	29.423	0.649	1.85	60'	EL	5.885	0.80	0.249	1.94	60'	EL	29.423	
		TNT4A	33.075	--	1.787	59.108	1.4	0.249	2.37	60'	EL	29.423	0.649	1.79	60'	EL	5.885	0.80	0.249	1.95	60'	EL	29.423	
		TNT6A	41.600	--	1.607	66.863	1.4	0.249	1.96	60'	EL	29.423	0.649	1.67	60'	EL	5.885	0.80	0.249	1.61	60'	EL	29.423	
		TNT7A	42.000	--	1.598	67.1	1.4	0.249	1.97	60'	EL	29.423	0.649	1.6	60'	EL	5.885	0.80	0.249	1.62	60'	EL	29.423	
		TNT7B	42.000	--	1.499	62.942	1.4	0.249	2.06	60'	EL	29.423	0.649	1.5	60'	EL	5.885	0.80	0.249	1.69	60'	EL	29.423	
		TNAGRIT4	43.000	--	1.447	62.223	1.4	0.249	1.95	60'	EL	29.423	0.649	1.45	60'	EL	5.885	0.80	0.249	1.60	60'	EL	29.423	
		TNAGT5A	45.000	--	1.455	65.474	1.4	0.249	1.83	60'	EL	29.423	0.649	1.45	60'	EL	5.885	0.80	0.249	1.50	60'	EL	29.423	
		TNAGT5B	45.000	3	1.374	61.845	1.4	0.249	1.8	60'	EL	29.423	0.649	**1.37**	60'	EL	**5.885**	0.80	0.249	1.48	60'	EL	29.423	

LOAD FACTORS:

DESIGN LOAD RATING FACTORS	LIMIT STATE	γ_{DC}	γ_{DW}
	STRENGTH I	1.25	1.50
	SERVICE III	1.00	1.00

NOTES:

MINIMUM RATING FACTORS ARE BASED ON THE STRENGTH I AND SERVICE III LIMIT STATES.

ALLOWABLE STRESSES FOR SERVICE III LIMIT STATE ARE AS REQUIRED FOR DESIGN.

COMMENTS:

1.
2.
3.
4.

(#) CONTROLLING LOAD RATING

(1) DESIGN LOAD RATING (HL-93)
(2) DESIGN LOAD RATING (HS-20)
(3) LEGAL LOAD RATING **
** SEE CHART FOR VEHICLE TYPE

GIRDER LOCATION

I - INTERIOR GIRDER
EL - EXTERIOR LEFT GIRDER
ER - EXTERIOR RIGHT GIRDER

LRFR SUMMARY
FOR SPAN B

PROJECT NO. BD-5114V
POLK COUNTY
STATION: 23+34.40 -L-

SHEET 2 OF 2

STATE OF NORTH CAROLINA
DEPARTMENT OF TRANSPORTATION
RALEIGH

STANDARD
LRFR SUMMARY FOR
60' CORED SLAB UNIT
60° SKEW & 120° SKEW
(NON-INTERSTATE TRAFFIC)

NORTH CAROLINA PROFESSIONAL SEAL 15779 ENGINEER JOHN R. DUGGINS, JR.
5/10/12

REVISIONS						SHEET NO.
NO.	BY:	DATE:	NO.	BY:	DATE:	S-5
1			3			TOTAL SHEETS
2			4			23

ASSEMBLED BY :	A. SORSENGINH	DATE :	11/14/2011
CHECKED BY :	B. MATHEW	DATE :	11/28/2011
DRAWN BY : CVC	6/10		
CHECKED BY : DNS	6/10		

10-MAY-2012 10:16
S:\DPG4\John\LIBR_Files\BD-5114V\Final_Plans\BD-5114V_SD_LRFR.dgn
jduggins

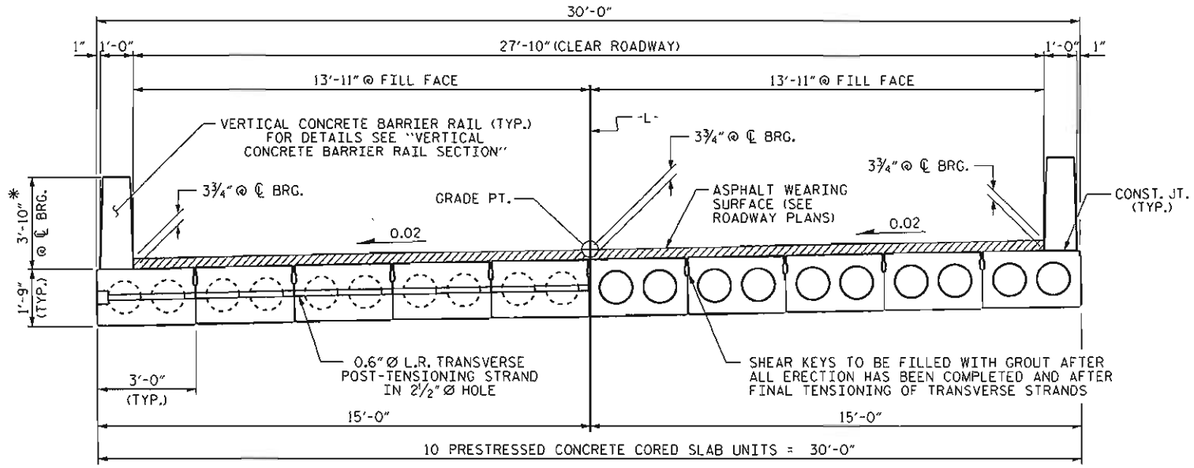

HALF SECTION
AT INTERMEDIATE DIAPHRAGMS

HALF SECTION
THROUGH VOIDS

TYPICAL SECTION

* - THE MAXIMUM BARRIER RAIL HEIGHT AND ASPHALT THICKNESS IS SHOWN. THE HEIGHT OF THE BARRIER RAIL AND ASPHALT THICKNESS VARIES WHILE THE TOP OF THE BARRIER RAIL FOLLOWS THE PROFILE OF THE GUTTERLINE. FOR RAIL HEIGHT DETAILS AND ASPHALT THICKNESS SEE THE "VERTICAL CONCRETE BARRIER RAIL SECTION" DETAIL.

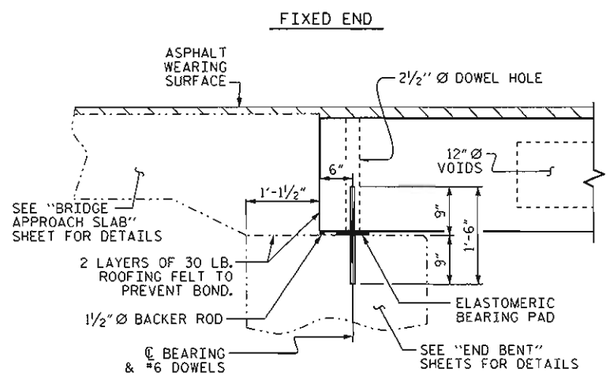

SECTION AT END BENT

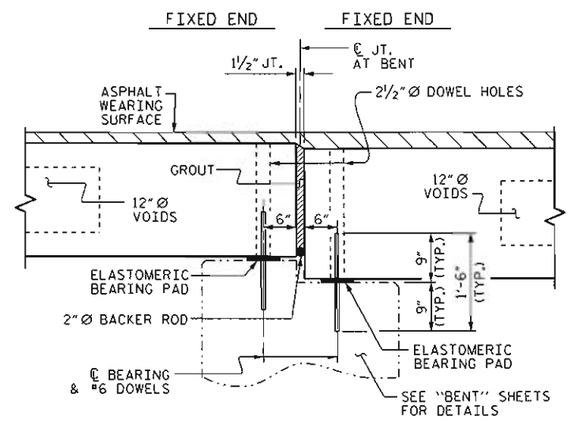

SECTION AT BENT

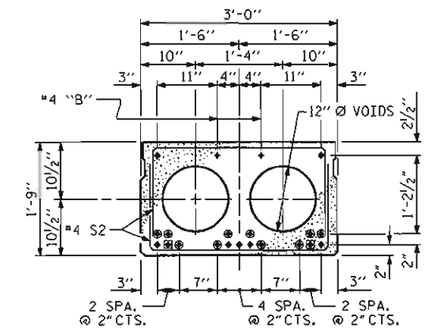

STRAND LAYOUT FOR 30' UNIT
(9 STRANDS REQUIRED)

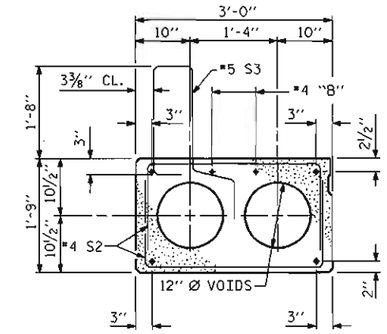

EXTERIOR SLAB SECTION
(FOR PRESTRESSED STRAND LAYOUT, SEE INTERIOR SLAB SECTION.)

INTERIOR SLAB SECTION
0.6" Ø LOW RELAXATION

▲ BOND SHALL BE BROKEN ON THESE STRANDS FOR A DISTANCE OF 6'-0" FROM END OF CORED SLAB UNIT. SEE STANDARD SPECIFICATIONS, ARTICLE 1078-7.

■ BOND SHALL BE BROKEN ON THESE STRANDS FOR A DISTANCE OF 2'-0" FROM END OF CORED SLAB UNIT. SEE STANDARD SPECIFICATIONS, ARTICLE 1078-7.

● OPTIONAL FULL LENGTH DEBONDED STRANDS. THESE STRANDS ARE NOT REQUIRED. IF THE FABRICATOR CHOOSES TO INCLUDE THESE STRANDS IN THE CORED SLAB UNIT, THE STRANDS SHALL BE DEBONDED FOR THE FULL LENGTH OF THE UNIT AT NO ADDITIONAL COST. SEE STANDARD SPECIFICATIONS, ARTICLE 1078-7.

DEBONDING LEGEND

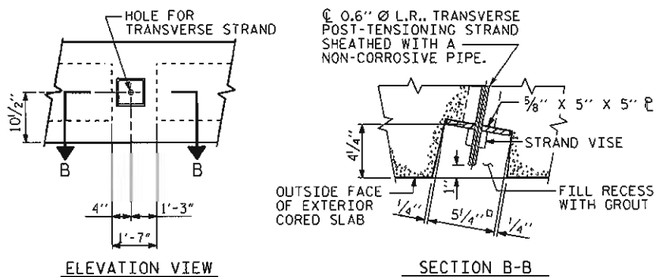

ELEVATION VIEW

SECTION B-B

GROUTED RECESS AT END OF POST-TENSIONED STRAND OF CORED SLABS

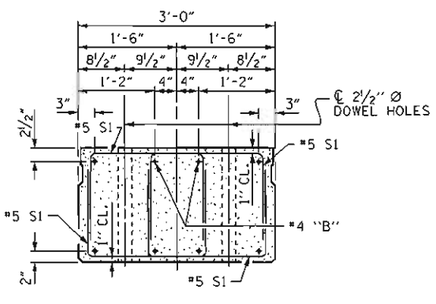

END ELEVATION

SHOWING PLACEMENT OF DOUBLE STIRRUPS AND LOCATION OF DOWEL HOLES. (STRAND LAYOUT NOT SHOWN.) INTERIOR SLAB UNIT SHOWN-EXTERIOR SLAB UNIT SIMILAR EXCEPT SHEAR KEY LOCATION.

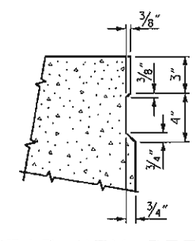

SHEAR KEY DETAIL

NOTE: OMIT SHEAR KEY ON OUTSIDE FACE OF EXTERIOR CORED SLABS.

PROJECT NO. BD-5114V
POLK COUNTY
STATION: 23+34.40 -L-

SHEET 1 OF 6

STATE OF NORTH CAROLINA
DEPARTMENT OF TRANSPORTATION
RALEIGH

STANDARD
3'-0" X 1'-9"
PRESTRESSED CONCRETE
CORED SLAB UNIT
120° SKEW

NORTH CAROLINA PROFESSIONAL SEAL 15779 ENGINEER JOHN W. DUGGINS, JR.
5/10/12

REVISIONS						SHEET NO.
NO.	BY:	DATE:	NO.	BY:	DATE:	S-6
1			3			TOTAL SHEETS
2			4			23

ASSEMBLED BY :	A. SORSENGINH	DATE : 11/14/2011
CHECKED BY :	B. MATHEW	DATE : 11/28/11
DRAWN BY : DGE	3/09	
CHECKED BY : BCH	3/09	

10-MAY-2012 10:15
S:\DPG4\John\LIBR_Files\BD-5114V\Final_Plans\BD-5114V_SD_S*.dgn
jduggins

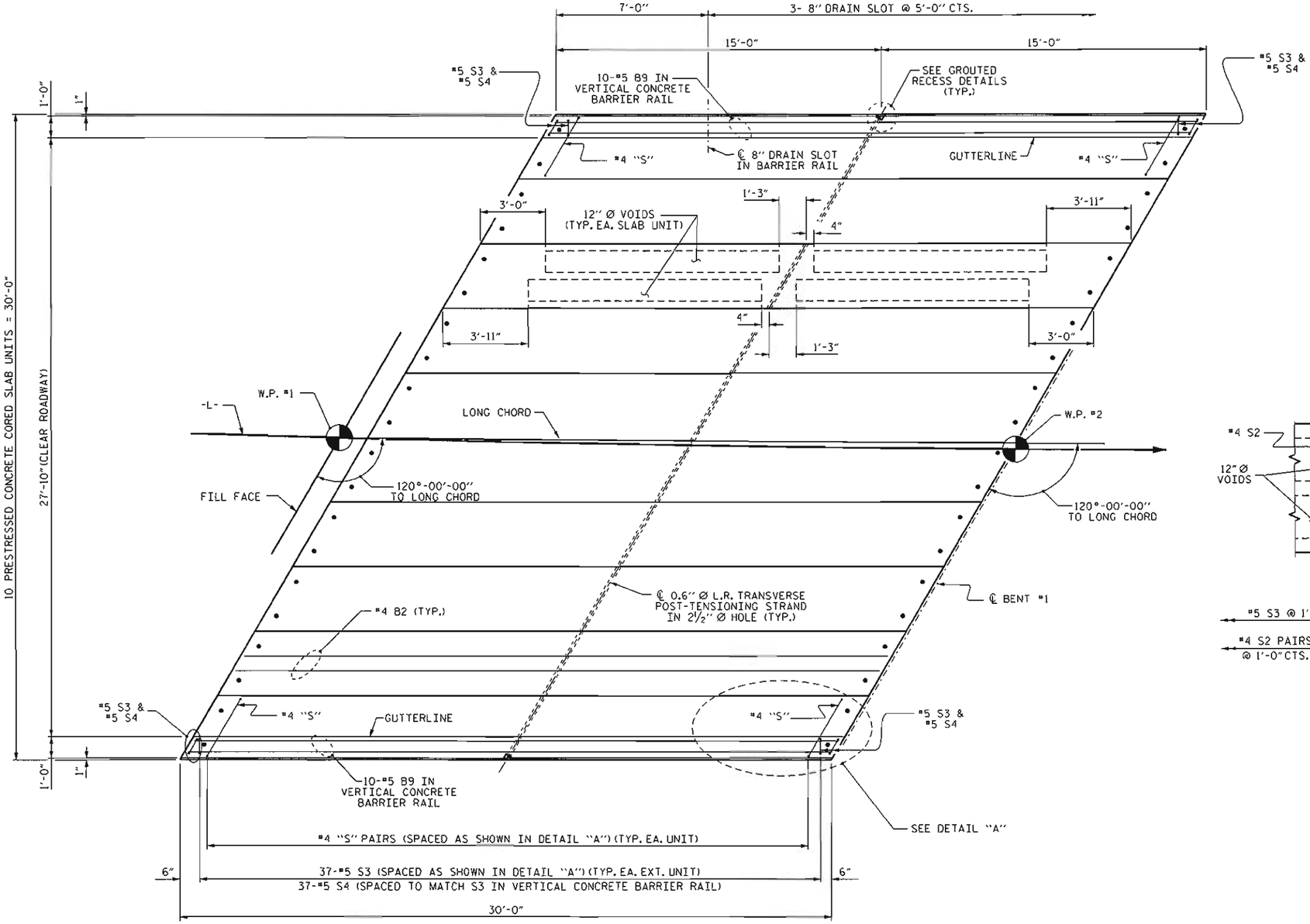

PLAN OF UNIT

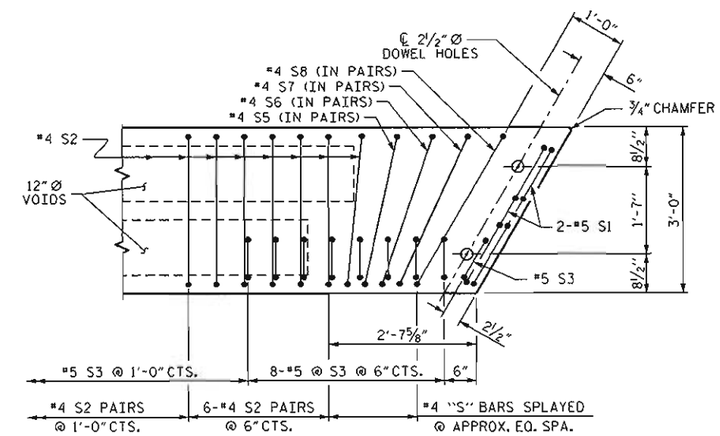

DETAIL "A"

NOTE: EXTERIOR UNIT SHOWN - INTERIOR UNIT SIMILAR EXCEPT OMIT #5 S3 BARS.

PROJECT NO. BD-5114V

POLK COUNTY

STATION: 23+34.40 -L-

SHEET 2 OF 6

STATE OF NORTH CAROLINA
DEPARTMENT OF TRANSPORTATION
RALEIGH

PLAN OF 30' UNIT
27'-10" CLEAR ROADWAY
120° SKEW

NORTH CAROLINA PROFESSIONAL SEAL 15779 ENGINEER JOHN R. DUGGINS, JR.
5/10/12

ASSEMBLED BY :	A. SORSENGINH	DATE :	11/14/2011
CHECKED BY :	B. MATHEW	DATE :	11/28/11
DRAWN BY :	DGE	3/09	
CHECKED BY :	BCH	3/09	

REVISIONS								SHEET NO.
NO.	BY:	DATE:	NO.	BY:	DATE:			S-7
1			3					TOTAL SHEETS
2			4					23

10-MAY-2012 10:14
S:\DPG4\John\LIBR_Files\BD-5114V\Final_Plans\BD-5114V_SD_S*.dgn
jduggins

GRADE 270 STRANDS	
	0.6"Ø L.R.
AREA (SQUARE INCHES)	0.217
ULTIMATE STRENGTH (LBS. PER STRAND)	58,600
APPLIED PRESTRESS (LBS. PER STRAND)	43,950

BILL OF MATERIAL FOR ONE 30' CORED SLAB UNIT

				EXTERIOR UNIT		INTERIOR UNIT	
BAR	NUMBER	SIZE	TYPE	LENGTH	WEIGHT	LENGTH	WEIGHT
B2	2	#4	STR	29'-7"	40	29'-7"	40
S1	8	#5	3	4'-6"	38	4'-6"	38
S2	62	#4	3	5'-4"	221	5'-4"	221
* S3	39	#5	1	6'-2"	251		
S5	4	#4	3	5'-5"	14	5'-5"	14
S6	4	#4	3	5'-6"	15	5'-6"	15
S7	4	#4	3	5'-7"	15	5'-7"	15
S8	4	#4	3	5'-9"	15	5'-9"	15
REINFORCING STEEL			LBS.		358		358
* EPOXY COATED REINFORCING STEEL			LBS.		251		
5000 P.S.I. CONCRETE			CU. YDS.		4.5		4.5
0.6"Ø L.R. STRANDS			No.		9		9

BAR TYPES

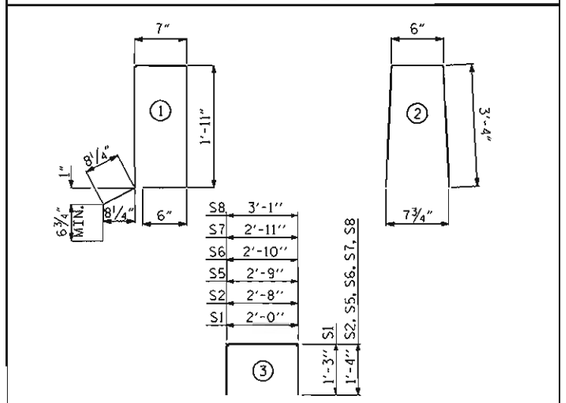

ALL BAR DIMENSIONS ARE OUT TO OUT

NOTES

ALL PRESTRESSING STRANDS SHALL BE 7-WIRE LOW RELAXATION GRADE 270 STRANDS AND SHALL CONFORM TO AASHTO M203 EXCEPT FOR SAMPLING REQUIREMENTS WHICH SHALL BE IN ACCORDANCE WITH THE STANDARD SPECIFICATIONS.

ALL REINFORCING STEEL CAST WITH THE CORED SLAB SECTIONS SHALL BE GRADE 60 AND SHALL BE INCLUDED IN THE UNIT PRICE BID FOR PRESTRESSED CONCRETE CORED SLABS.

RECESSES FOR TRANSVERSE STRANDS SHALL BE GROUTED AFTER THE TENSIONING OF THE STRANDS.

THE 2½"Ø DOWEL HOLES AT FIXED ENDS OF SLAB SECTIONS SHALL BE FILLED WITH NON-SHRINK GROUT.

THE BACKER RODS SHALL CONFORM TO THE REQUIREMENTS OF TYPE M BOND BREAKER. SEE SECTION 1028 OF THE STANDARD SPECIFICATIONS.

WHEN CORED SLABS ARE CAST, AN INTERNAL HOLD-DOWN SYSTEM SHALL BE EMPLOYED TO PREVENT VOIDS FROM RISING OR MOVING SIDEWAYS. AT LEAST SIX WEEKS PRIOR TO CASTING CORED SLABS, THE CONTRACTOR SHALL SUBMIT TO THE ENGINEER FOR REVIEW AND COMMENT, DETAILED DRAWINGS OF THE PROPOSED HOLD-DOWN SYSTEM. IN ADDITION TO STRUCTURAL DETAILS, LOCATION AND SPACING OF THE HOLD-DOWNS SHALL BE INDICATED.

ALL REINFORCING STEEL IN THE VERTICAL CONCRETE BARRIER RAIL SHALL BE EPOXY COATED.

PRESTRESSING STRANDS SHALL BE CUT FLUSH WITH THE CORED SLAB UNIT ENDS.

APPLY EPOXY PROTECTIVE COATING TO CORED SLAB UNIT ENDS.

GROOVED CONTRACTION JOINTS, ½" IN DEPTH, SHALL BE TOOLED IN ALL EXPOSED FACES OF THE BARRIER RAIL AND IN ACCORDANCE WITH ARTICLE 825-10(B) OF THE STANDARD SPECIFICATIONS. A CONTRACTION JOINT SHALL BE LOCATED AT EACH THIRD POINT BETWEEN BARRIER RAIL EXPANSION JOINTS. ONLY ONE CONTRACTION JOINT IS REQUIRED AT MIDPOINT OF BARRIER RAIL SEGMENTS LESS THAN 20 FEET IN LENGTH AND NO CONTRACTION JOINTS ARE REQUIRED FOR THOSE SEGMENTS LESS THAN 10 FEET IN LENGTH.

TRANSVERSE POST TENSIONING OF THE CORED SLAB UNITS SHALL BE DONE IN ACCORDANCE WITH THE STANDARD SPECIFICATIONS.

THE TRANSFER OF LOAD FROM THE ANCHORAGES TO THE CORED SLAB UNIT SHALL BE DONE WHEN THE CONCRETE HAS REACHED A COMPRESSIVE STRENGTH OF NOT LESS THAN THE REQUIRED STRENGTH SHOWN IN THE "CONCRETE RELEASE STRENGTH" TABLE.

FOR GROUT FOR STRUCTURES, SEE SPECIAL PROVISIONS.

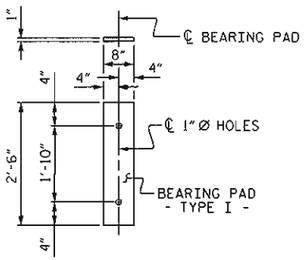

FIXED END
(TYPE I - 20 REQ'D)

DEAD LOAD DEFLECTION AND CAMBER

	3'-0" x 1'-9"
30' CORED SLAB UNIT	0.6"Ø L.R. STRAND
CAMBER (SLAB ALONE IN PLACE)	½" ↑
DEFLECTION DUE TO SUPERIMPOSED DEAD LOAD**	⅛" ↓
FINAL CAMBER	⅜" ↑

** INCLUDES FUTURE WEARING SURFACE

ELASTOMERIC BEARING DETAILS

ELASTOMER IN ALL BEARINGS SHALL BE 50 DUROMETER HARDNESS.

BILL OF MATERIAL FOR VERTICAL CONCRETE BARRIER RAIL

BAR	BARS PER PAIR OF EXTERIOR UNITS	TOTAL NO.	SIZE	TYPE	LENGTH	WEIGHT
	30' UNIT					
* B9	20	20	#5	STR	29'-6"	615
* S4	78	78	#5	2	7'-2"	583
* EPOXY COATED REINFORCING STEEL				LBS.		1198
CLASS AA CONCRETE				CU.YDS.		7.9
TOTAL VERTICAL CONCRETE BARRIER RAIL				LN. FT.		60.29

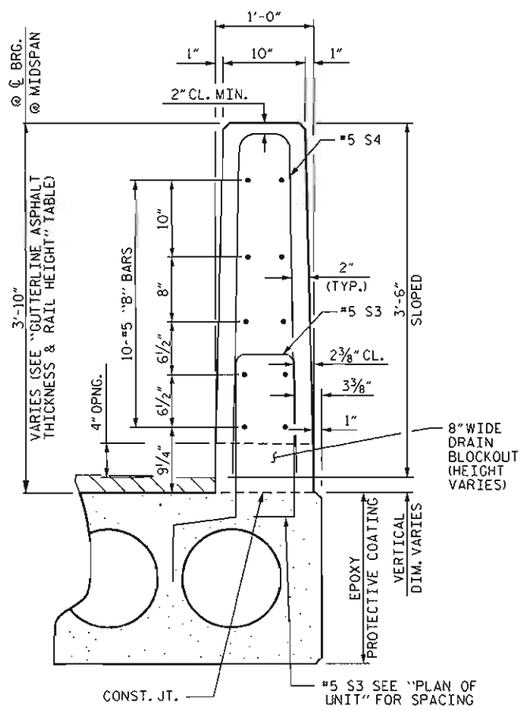

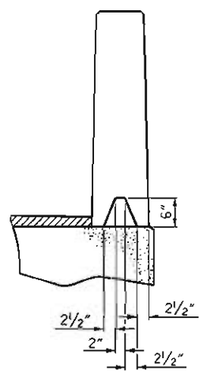

SECTION S-S
AT DAM IN OPEN JOINT
(THIS IS TO BE USED ONLY WHEN SLIP FORM IS USED)

GUTTERLINE ASPHALT THICKNESS & RAIL HEIGHT

27'-10" CLEAR ROADWAY	ASPHALT OVERLAY THICKNESS	RAIL HEIGHT
	@ MID-SPAN	@ MID-SPAN
	SUPERED SECTION	
30' UNITS	3⅜"	3'-9⅝"

CONCRETE RELEASE STRENGTH

UNIT	PSI
30' UNITS	4000

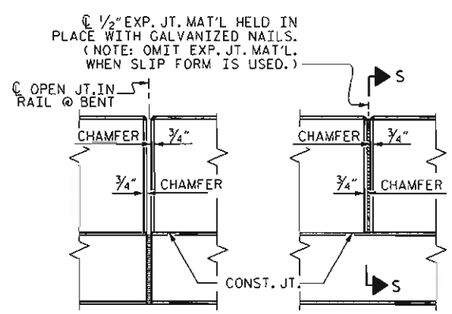

ELEVATION AT EXPANSION JOINTS

CORED SLABS REQUIRED

	NUMBER	LENGTH	TOTAL LENGTH
30' UNIT			
EXTERIOR C.S.	2	30'-0"	60'-0"
INTERIOR C.S.	8	30'-0"	240'-0"
TOTAL	10		300'-0"

PROJECT NO. BD-5114V
POLK COUNTY
STATION: 23+34.40 -L-

SHEET 3 OF 6

STATE OF NORTH CAROLINA
DEPARTMENT OF TRANSPORTATION
RALEIGH

STANDARD
3'-0" X 1'-9"
PRESTRESSED CONCRETE
CORED SLAB UNIT
120° SKEW

NORTH CAROLINA PROFESSIONAL SEAL 15779 ENGINEER JOHN R. DUGGINS, JR.
5/10/12

REVISIONS						SHEET NO.
NO.	BY:	DATE:	NO.	BY:	DATE:	S-8
1			3			TOTAL SHEETS
2			4			23

VERTICAL CONCRETE BARRIER RAIL SECTION

ASSEMBLED BY :	A. SORSENGINH	DATE :	11/14/2011
CHECKED BY :	B. MATHEW	DATE :	11/28/11
DRAWN BY :	DGE 5/09		
CHECKED BY :	BCH 6/09		

10-MAY-2012 10:14
S:\OPG4\John\LIBR_Files\BD-5114V\Final_Plans\BD-5114V_SD_S*.dgn
jduggins

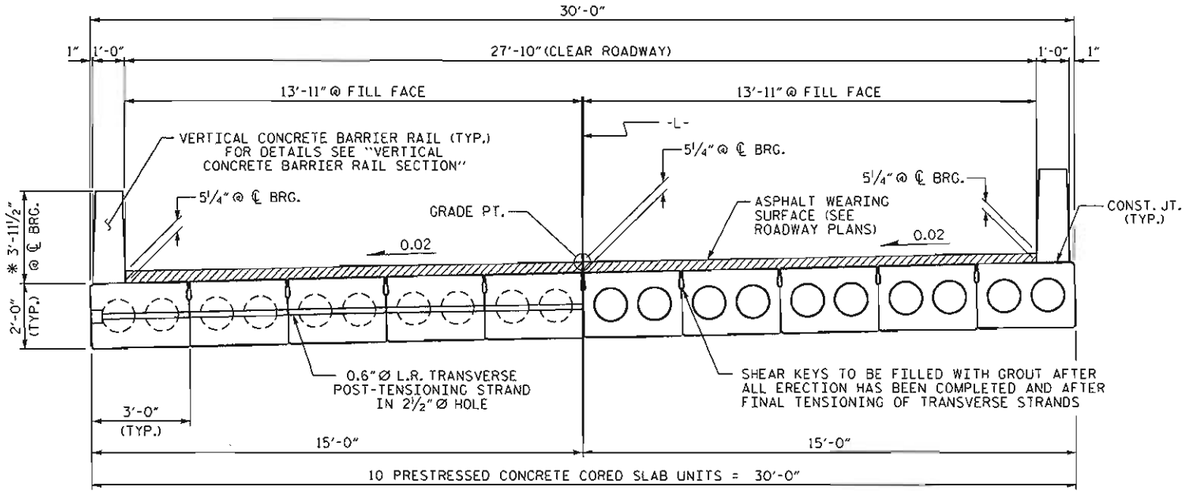

HALF SECTION
AT INTERMEDIATE DIAPHRAGMS

TYPICAL SECTION

HALF SECTION
THROUGH VOIDS

* - THE MAXIMUM BARRIER RAIL HEIGHT AND ASPHALT THICKNESS IS SHOWN. THE HEIGHT OF THE BARRIER RAIL AND ASPHALT THICKNESS VARIES WHILE THE TOP OF THE BARRIER RAIL FOLLOWS THE PROFILE OF THE GUTTERLINE. FOR RAIL HEIGHT DETAILS AND ASPHALT THICKNESS, SEE THE "VERTICAL CONCRETE BARRIER RAIL SECTION" DETAIL.

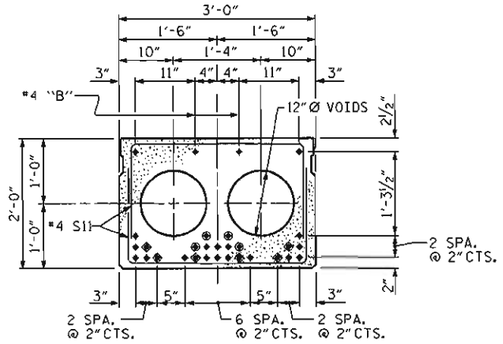

STRAND LAYOUT FOR 60' UNIT
(24 STRANDS REQUIRED)

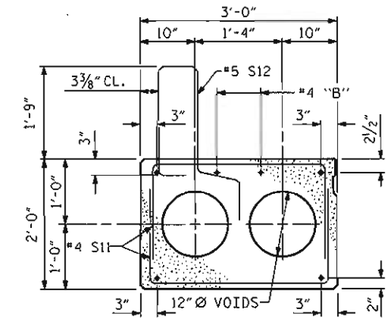

EXTERIOR SLAB SECTION
(FOR PRESTRESSED STRAND LAYOUT, SEE INTERIOR SLAB SECTION.)

INTERIOR SLAB SECTION
0.6" Ø LOW RELAXATION

◆ BOND SHALL BE BROKEN ON THESE STRANDS FOR A DISTANCE OF 12'-0" FROM END OF CORED SLAB UNIT. SEE STANDARD SPECIFICATIONS, ARTICLE 1078-7.

◉ OPTIONAL FULL LENGTH DEBONDED STRANDS. THESE STRANDS ARE NOT REQUIRED. IF THE FABRICATOR CHOOSES TO INCLUDE THESE STRANDS IN THE CORED SLAB UNIT, THE STRANDS SHALL BE DEBONDED FOR THE FULL LENGTH OF THE UNIT AT NO ADDITIONAL COST. SEE STANDARD SPECIFICATIONS, ARTICLE 1078-7.

DEBONDING LEGEND

FIXED END

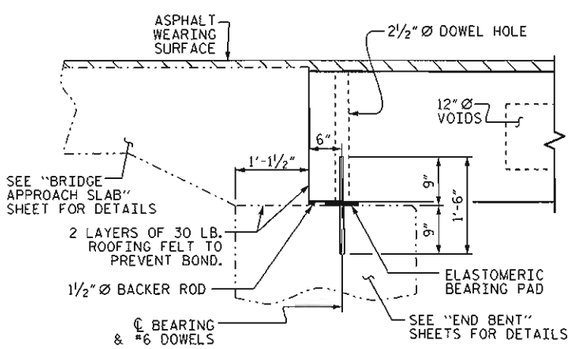

SECTION AT END BENT

FIXED END FIXED END

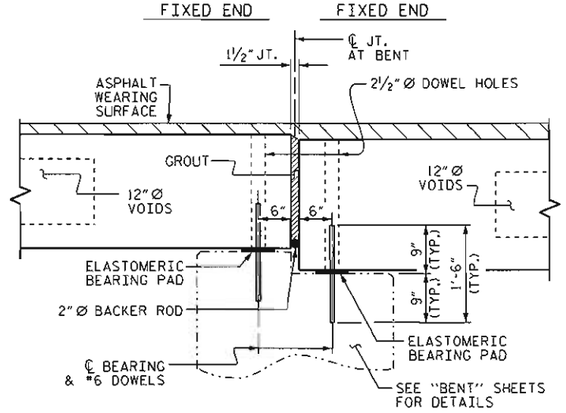

SECTION AT BENT

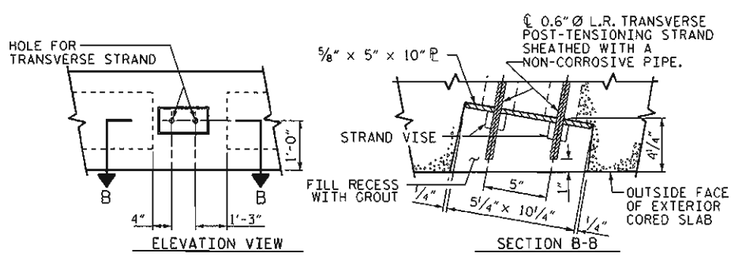

GROUTED RECESS AT END OF POST-TENSIONED STRAND OF CORED SLABS

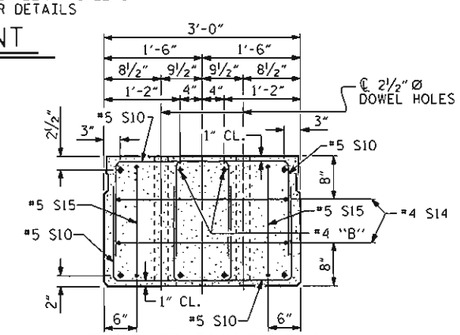

END ELEVATION

SHOWING PLACEMENT OF DOUBLE STIRRUPS AND LOCATION OF DOWEL HOLES. (STRAND LAYOUT NOT SHOWN.) INTERIOR SLAB UNIT SHOWN-EXTERIOR SLAB UNIT SIMILAR EXCEPT SHEAR KEY LOCATION.

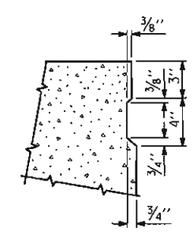

SHEAR KEY DETAIL

NOTE: OMIT SHEAR KEY ON OUTSIDE FACE OF EXTERIOR CORED SLABS.

PROJECT NO. BD-5114V
POLK COUNTY
STATION: 23+34.40 -L-

SHEET 4 OF 6

STATE OF NORTH CAROLINA
DEPARTMENT OF TRANSPORTATION
RALEIGH

STANDARD

3'-0" X 2'-0"
PRESTRESSED CONCRETE
CORED SLAB UNIT

NORTH CAROLINA PROFESSIONAL SEAL 15779 ENGINEER JOHN R. DUGGINS, JR.
5/10/12

REVISIONS						SHEET NO.
NO.	BY:	DATE:	NO.	BY:	DATE:	S-9
1			3			TOTAL SHEETS
2			4			23

ASSEMBLED BY :	A. SORSENGINH	DATE :	11/15/2011
CHECKED BY :	B. MATHEW	DATE :	11/28/11
DRAWN BY : MAA	6/10		
CHECKED BY : MKT	7/10		

10-MAY-2012 10:13
S:\DPG4\John\LIBR_Files\BD-5114V\Final_Plans\BD-5114V_SD_S*.dgn
jduggins

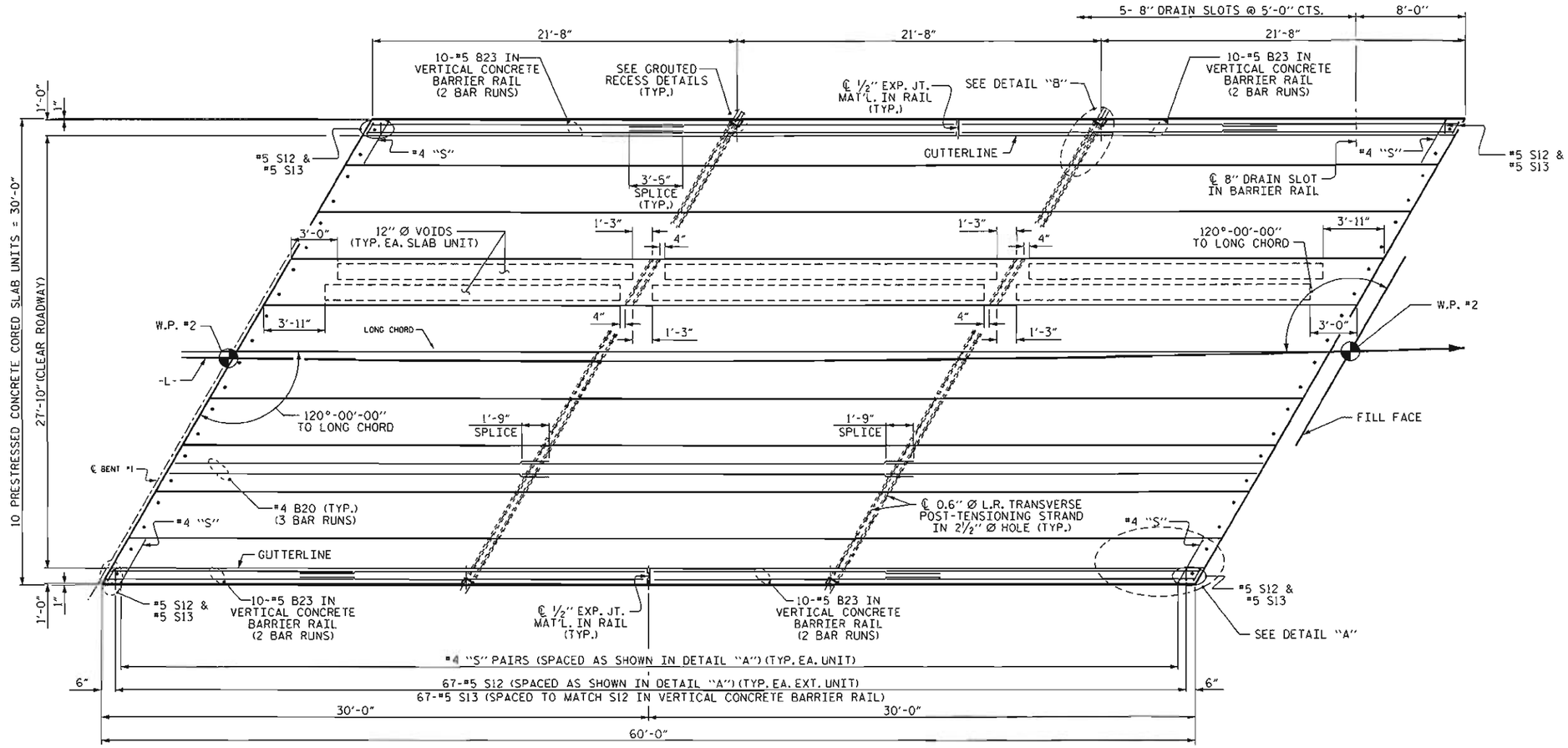

PLAN OF UNIT

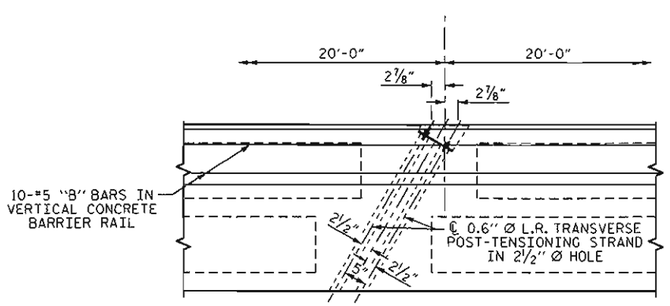

DETAIL "B"

#4 S11 BARS MAY BE SHIFTED AS NECESSARY TO MAINTAIN 1" CLEAR TO GROUTED RECESS AND 2 1/2" Ø TRANSVERSE POST-TENSIONING STRAND HOLES

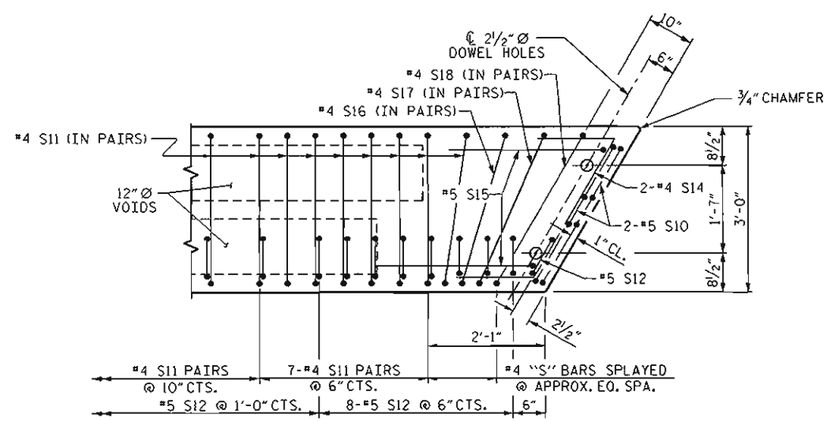

DETAIL "A"

NOTE: EXTERIOR UNIT SHOWN - INTERIOR UNIT SIMILAR EXCEPT OMIT #5 S12 BARS.

PROJECT NO. BD-5114V

POLK COUNTY

STATION: 23+34.40 -L-

SHEET 5 OF 6

STATE OF NORTH CAROLINA
DEPARTMENT OF TRANSPORTATION
RALEIGH

PLAN OF 60' UNIT 27'-10" CLEAR ROADWAY 120° SKEW

NORTH CAROLINA PROFESSIONAL SEAL 15779 ENGINEER JOHN R. DUGGINS, JR.

5/10/12

ASSEMBLED BY :	A. SORSENGINH	DATE :	11/15/2011
CHECKED BY :	B. MATHEW	DATE :	11/28/2011
DRAWN BY :	MAA	6/10	
CHECKED BY :	MKT	7/10	

REVISIONS								SHEET NO.
NO.	BY:	DATE:	NO.	BY:	DATE:			S-10
1			3					TOTAL SHEETS
2			4					23

10-MAY-2012 10:13
S:\DPG4\John\LIBR_Files\BD-5114V\Final_Plans\BD-5114V_SD_S*.dgn
jduggins

GRADE 270 STRANDS	
	0.6"Ø L.R.
AREA (SQUARE INCHES)	0.217
ULTIMATE STRENGTH (LBS. PER STRAND)	58,600
APPLIED PRESTRESS (LBS. PER STRAND)	43,950

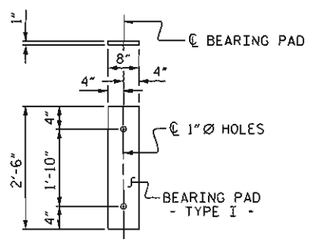

FIXED END
(TYPE I - 20 REQ'D)

ELASTOMERIC BEARING DETAILS

ELASTOMER IN ALL BEARINGS SHALL BE 60 DUROMETER HARDNESS.

BILL OF MATERIAL FOR ONE 60' CORED SLAB UNIT

				EXTERIOR UNIT		INTERIOR UNIT	
BAR	NUMBER	SIZE	TYPE	LENGTH	WEIGHT	LENGTH	WEIGHT
B20	6	#4	STR	21'-2"	85	21'-2"	85
S10	8	#5	3	5'-0"	42	5'-0"	42
S11	146	#4	3	5'-10"	569	5'-10"	569
*S12	69	#5	1	6'-4"	456		
S14	4	#4	4	5'-11"	16	5'-11"	16
S15	4	#5	3	7'-1"	30	7'-1"	30
S16	4	#4	3	5'-11"	16	5'-11"	16
S17	4	#4	3	6'-1"	16	6'-1"	16
S18	4	#4	3	6'-3"	17	6'-3"	17
REINFORCING STEEL			LBS.		791		791
*EPOXY COATED REINFORCING STEEL			LBS.		456		
6000 P.S.I. CONCRETE			CU. YDS.		10.4		10.4
0.6"Ø L.R. STRANDS			No.		24		24

BAR TYPES

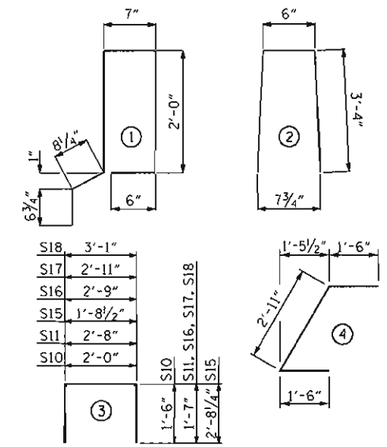

ALL BAR DIMENSIONS ARE OUT TO OUT

NOTES

ALL PRESTRESSING STRANDS SHALL BE 7-WIRE LOW RELAXATION GRADE 270 STRANDS AND SHALL CONFORM TO AASHTO M203 EXCEPT FOR SAMPLING REQUIREMENTS WHICH SHALL BE IN ACCORDANCE WITH THE STANDARD SPECIFICATIONS.

ALL REINFORCING STEEL CAST WITH THE CORED SLAB SECTIONS SHALL BE GRADE 60 AND SHALL BE INCLUDED IN THE UNIT PRICE BID FOR PRESTRESSED CONCRETE CORED SLABS.

RECESSES FOR TRANSVERSE STRANDS SHALL BE GROUTED AFTER THE TENSIONING OF THE STRANDS.

THE 2½"Ø DOWEL HOLES AT FIXED ENDS OF SLAB SECTIONS SHALL BE FILLED WITH NON-SHRINK GROUT.

THE BACKER RODS SHALL CONFORM TO THE REQUIREMENTS OF TYPE M BOND BREAKER. SEE SECTION 1028 OF THE STANDARD SPECIFICATIONS.

WHEN CORED SLABS ARE CAST, AN INTERNAL HOLD-DOWN SYSTEM SHALL BE EMPLOYED TO PREVENT VOIDS FROM RISING OR MOVING SIDEWAYS. AT LEAST SIX WEEKS PRIOR TO CASTING CORED SLABS, THE CONTRACTOR SHALL SUBMIT TO THE ENGINEER FOR REVIEW AND COMMENT, DETAILED DRAWINGS OF THE PROPOSED HOLD-DOWN SYSTEM. IN ADDITION TO STRUCTURAL DETAILS, LOCATION AND SPACING OF THE HOLD-DOWNS SHALL BE INDICATED.

THE TRANSFER OF LOAD FROM THE ANCHORAGES TO THE CORED SLAB UNIT SHALL BE DONE WHEN THE CONCRETE HAS REACHED A COMPRESSIVE STRENGTH OF NOT LESS THAN THE REQUIRED STRENGTH SHOWN IN THE "CONCRETE RELEASE STRENGTH" TABLE.

ALL REINFORCING STEEL IN VERTICAL CONCRETE BARRIER RAILS SHALL BE EPOXY COATED.

PRESTRESSING STRANDS SHALL BE CUT FLUSH WITH THE CORED SLAB UNIT ENDS.

APPLY EPOXY PROTECTIVE COATING TO CORED SLAB UNIT ENDS.

GROOVED CONTRACTION JOINTS, ½" IN DEPTH, SHALL BE TOOLED IN ALL EXPOSED FACES OF THE BARRIER RAIL AND IN ACCORDANCE WITH ARTICLE 825-10(B) OF THE STANDARD SPECIFICATIONS. A CONTRACTION JOINT SHALL BE LOCATED AT EACH THIRD POINT BETWEEN BARRIER RAIL EXPANSION JOINTS. ONLY ONE CONTRACTION JOINT IS REQUIRED AT MIDPOINT OF BARRIER RAIL SEGMENTS LESS THAN 20 FEET IN LENGTH AND NO CONTRACTION JOINTS ARE REQUIRED FOR THOSE SEGMENTS LESS THAN 10 FEET IN LENGTH.

TRANSVERSE POST TENSIONING OF THE CORED SLAB UNITS SHALL BE DONE IN ACCORDANCE WITH THE STANDARD SPECIFICATIONS.

MAINTAIN A SYMMETRIC TENSION FORCE BETWEEN EACH PAIR OF TRANSVERSE POST TENSIONING STRANDS IN THE DIAPHRAGM.

THE #4 S11 STIRRUPS MAY BE SHIFTED AS NECESSARY TO MAINTAIN 1" CLEAR TO THE GROUTED RECESS.

FOR GROUT FOR STRUCTURES, SEE SPECIAL PROVISIONS.

DEAD LOAD DEFLECTION AND CAMBER

	3'-0" x 2'-0"
60' CORED SLAB UNIT	0.6"Ø L.R. STRAND
CAMBER (SLAB ALONE IN PLACE)	3⅜" ↑
DEFLECTION DUE TO SUPERIMPOSED DEAD LOAD**	½" ↓
FINAL CAMBER	2⅞" ↑

** INCLUDES FUTURE WEARING SURFACE

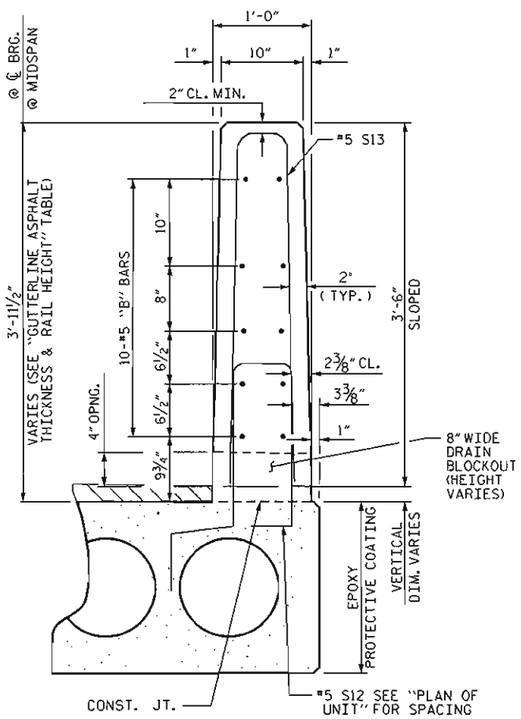

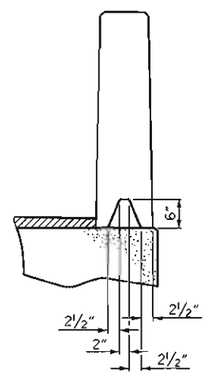

SECTION S-S
AT DAM IN OPEN JOINT
(THIS IS TO BE USED ONLY WHEN SLIP FORM IS USED)

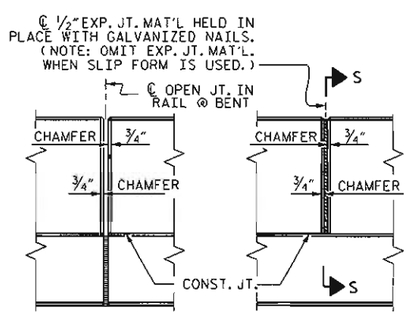

ELEVATION AT EXPANSION JOINTS

BILL OF MATERIAL FOR VERTICAL CONCRETE BARRIER RAIL

BAR	BARS PER PAIR OF EXTERIOR UNITS	TOTAL NO.	SIZE	TYPE	LENGTH	WEIGHT
	60' UNIT					
*B23	80	80	#5	STR	16'-11"	1412
*S13	138	138	#5	2	7'-2"	1032
*EPOXY COATED REINFORCING STEEL				LBS.		2444
CLASS AA CONCRETE				CU.YDS.		16.2
TOTAL VERTICAL CONCRETE BARRIER RAIL				LN. FT.		120.29

GUTTERLINE ASPHALT THICKNESS & RAIL HEIGHT

	ASPHALT OVERLAY THICKNESS @ MID-SPAN	RAIL HEIGHT @ MID-SPAN
60' UNITS	2⅜"	3'-8⅝"

CONCRETE RELEASE STRENGTH

UNIT	PSI
60' UNITS	4800

CORED SLABS REQUIRED

	NUMBER	LENGTH	TOTAL LENGTH
60' UNIT			
EXTERIOR C.S.	2	60'-0"	120'-0"
INTERIOR C.S.	8	60'-0"	480'-0"
TOTAL	10		600'-0"

PROJECT NO. BD-5114V
POLK COUNTY
STATION: 23+34.40 -L-

SHEET 6 OF 6

STATE OF NORTH CAROLINA
DEPARTMENT OF TRANSPORTATION
RALEIGH

STANDARD
3'-0" X 2-0"
PRESTRESSED CONCRETE
CORED SLAB UNIT

NORTH CAROLINA PROFESSIONAL SEAL 15779 ENGINEER JOHN R. DUGGINS, JR.
5/16/12

REVISIONS						SHEET NO.
NO.	BY:	DATE:	NO.	BY:	DATE:	S-11
1			3			TOTAL SHEETS
2			4			23

VERTICAL CONCRETE BARRIER RAIL DETAILS

ASSEMBLED BY :	A. SORSENGINH	DATE :	11/15/2011
CHECKED BY :	B. MATHEW	DATE :	11/28/11
DRAWN BY :	MAA	6/10	
CHECKED BY :	MKT	7/10	

10-MAY-2012 10:13
S:\DPG4\John\LTBR_Files\BD-5114V\Final_Plans\BD-5114V_SD_S*.dgn
jduggins

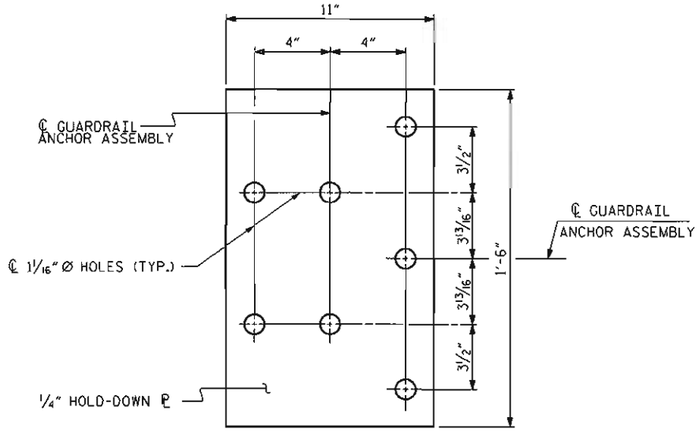

PLAN

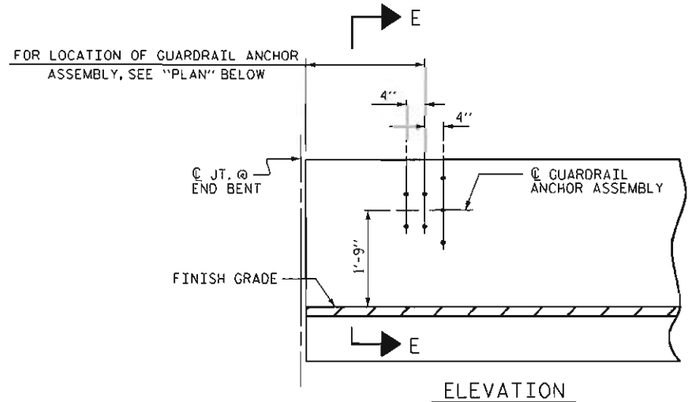

ELEVATION

NOTES

THE GUARDRAIL ANCHOR ASSEMBLY SHALL CONSIST OF A 1/4" HOLD DOWN PLATE AND 7 - 7/8" Ø BOLTS WITH NUTS AND WASHERS.

THE HOLD-DOWN PLATE SHALL CONFORM TO AASHTO M270 GRADE 36. AFTER FABRICATION, THE HOLD-DOWN PLATE SHALL BE HOT-DIP GALVANIZED IN ACCORDANCE WITH AASHTO M111.

BOLTS SHALL CONFORM TO THE REQUIREMENTS OF ASTM A307 AND NUTS SHALL CONFORM TO THE REQUIREMENTS OF AASHTO M291. BOLTS, NUTS AND WASHERS SHALL BE GALVANIZED. (AT THE CONTRACTOR'S OPTION, STAINLESS STEEL BOLTS, NUTS AND WASHERS MAY BE USED AS AN ALTERNATE FOR THE 7/8" Ø GALVANIZED BOLTS, NUTS AND WASHERS. THEY SHALL CONFORM TO OR EXCEED THE MECHANICAL REQUIREMENTS OF ASTM A307. THE USE OF THIS ALTERNATE SHALL BE APPROVED BY THE ENGINEER.)

THE GUARDRAIL ANCHOR ASSEMBLY IS REQUIRED AT ALL POINTS WHERE APPROACH GUARDRAIL IS TO BE ATTACHED TO THE END OF BARRIER RAIL. FOR POINTS OF ATTACHMENT, SEE SKETCH.

AFTER INSTALLATION, THE EXPOSED THREAD OF THE BOLT SHALL BE BURRED WITH A SHARP POINTED TOOL.

THE COST OF THE GUARDRAIL ANCHOR ASSEMBLY SHALL BE INCLUDED IN THE UNIT CONTRACT PRICE BID FOR VERTICAL CONCRETE BARRIER RAIL.

THE VERTICAL REINFORCING BARS MAY BE SHIFTED SLIGHTLY IN THE VERTICAL CONCRETE BARRIER RAIL TO CLEAR ASSEMBLY BOLTS.

THE 1 1/4" Ø HOLES SHALL BE FORMED OR DRILLED WITH A CORE BIT. IMPACT TOOLS WILL NOT BE PERMITTED. ANY CONCRETE DAMAGED BY THIS WORK SHALL BE REPAIRED TO THE SATISFACTION OF THE ENGINEER.

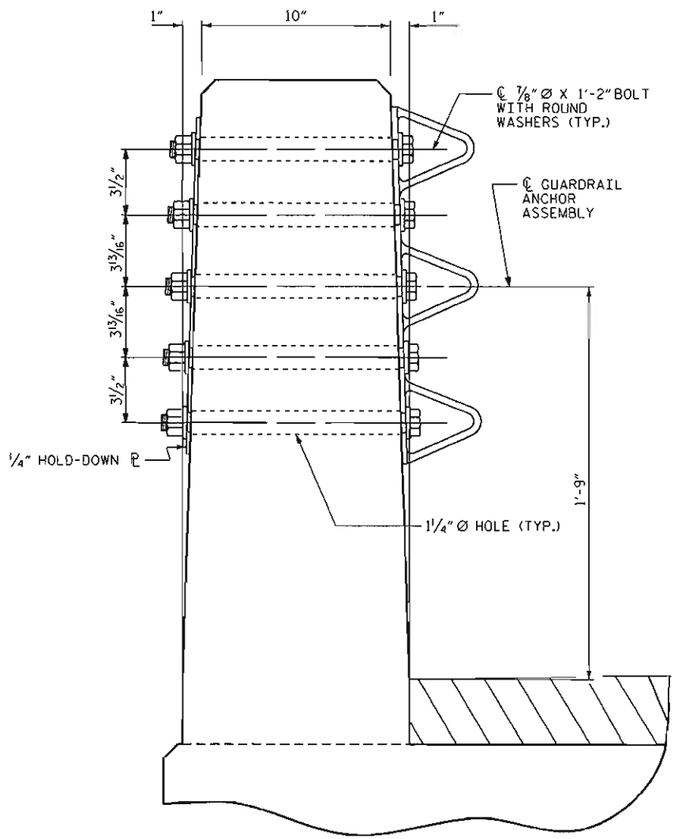

SECTION E-E

GUARDRAIL ANCHOR ASSEMBLY DETAILS

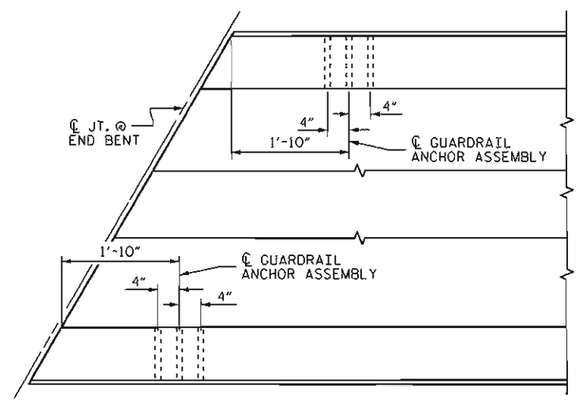

PLAN

LOCATION OF ANCHORS FOR GUARDRAIL

END BENT #1 SHOWN, END BENT #2 SIMILAR.

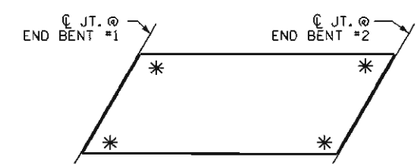

SKETCH SHOWING POINTS OF ATTACHMENT

✳ DENOTES GUARDRAIL ANCHOR ASSEMBLY

PROJECT NO. BD-5114V
POLK COUNTY
STATION: 23+34.40 -L-

STATE OF NORTH CAROLINA
DEPARTMENT OF TRANSPORTATION
RALEIGH

STANDARD
GUARDRAIL ANCHORAGE FOR VERTICAL CONCRETE BARRIER RAIL

NORTH CAROLINA PROFESSIONAL SEAL 15779 ENGINEER JOHN R. DUGGINS, JR.
5/10/12

REVISIONS								SHEET NO.
NO.	BY:	DATE:	NO.	BY:	DATE:			S-12
1			3					TOTAL SHEETS
2			4					23

ASSEMBLED BY : A. SORSENGINH		DATE : 11/14/11	
CHECKED BY : B. MATHEW		DATE : 11/28/11	
DRAWN BY : MAA 5/10	ADDED 5/6/10 REV. 10/1/11	MAA/GM	
CHECKED BY : GM 5/10			

10-MAY-2012 10:12
S:\DPC45\John\LTBR_Files\BD-5114V\Final_Plans\BD-5114V_SD_GR.dgn
jduggins

NOTES

STIRRUPS IN CAP MAY BE SHIFTED AS NECESSARY TO CLEAR DOWELS.

THE LATERAL GUIDES ARE NOT TO BE POURED UNTIL AFTER THE CORED SLAB UNITS ARE IN PLACE.

THE CONCRETE IN THE SHADED AREA OF THE WING SHALL BE POURED AFTER THE VERTICAL CONCRETE BARRIER RAIL IS CAST IF SLIP FORMING IS USED.

FOR PILE SPLICE DETAILS, SEE SHEET 3 OF 3.

FOR WING DETAILS, SEE SHEET 2 OF 3.

THE CONTRACTOR HAS THE OPTION TO OMIT THE LATERAL GUIDE IF APPROVED BY THE ENGINEER.

FOR 18" STEEL SHEET PILES, SEE SPECIAL PROVISIONS.

STEEL SHEET PILES SHALL BE EMBEDDED A MINIMUM OF 1'-0" INTO END BENT CAP.

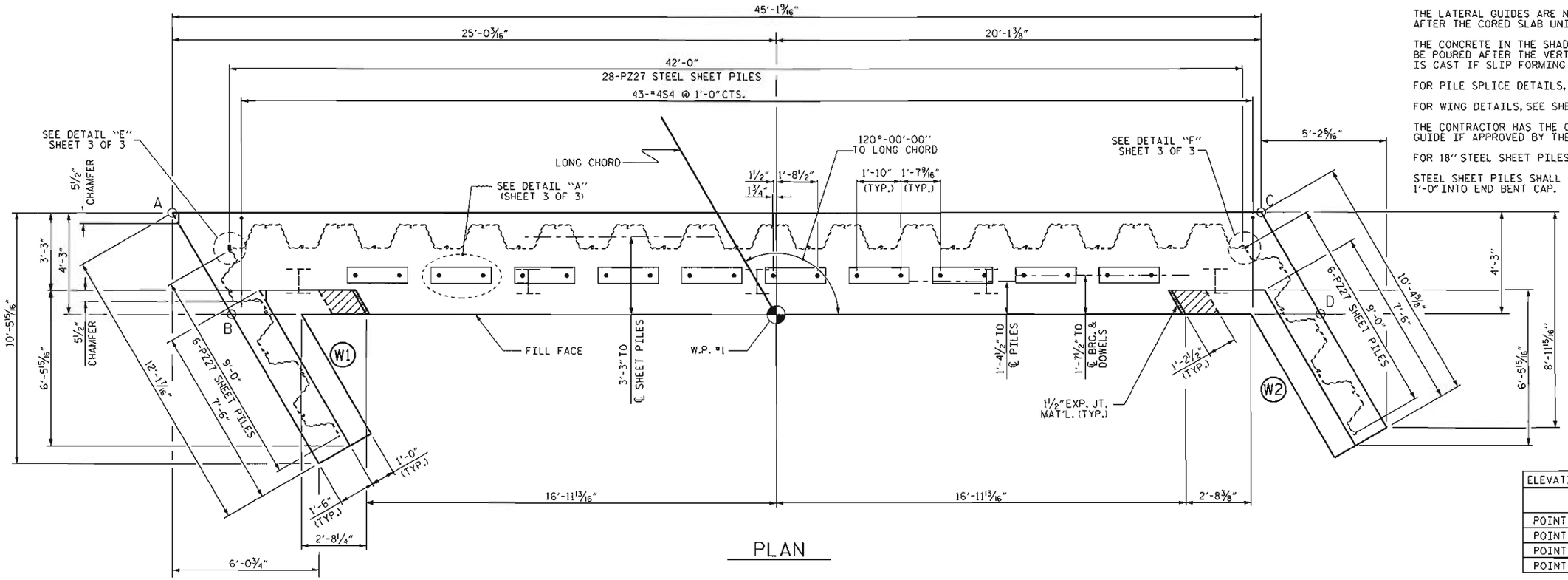

PLAN

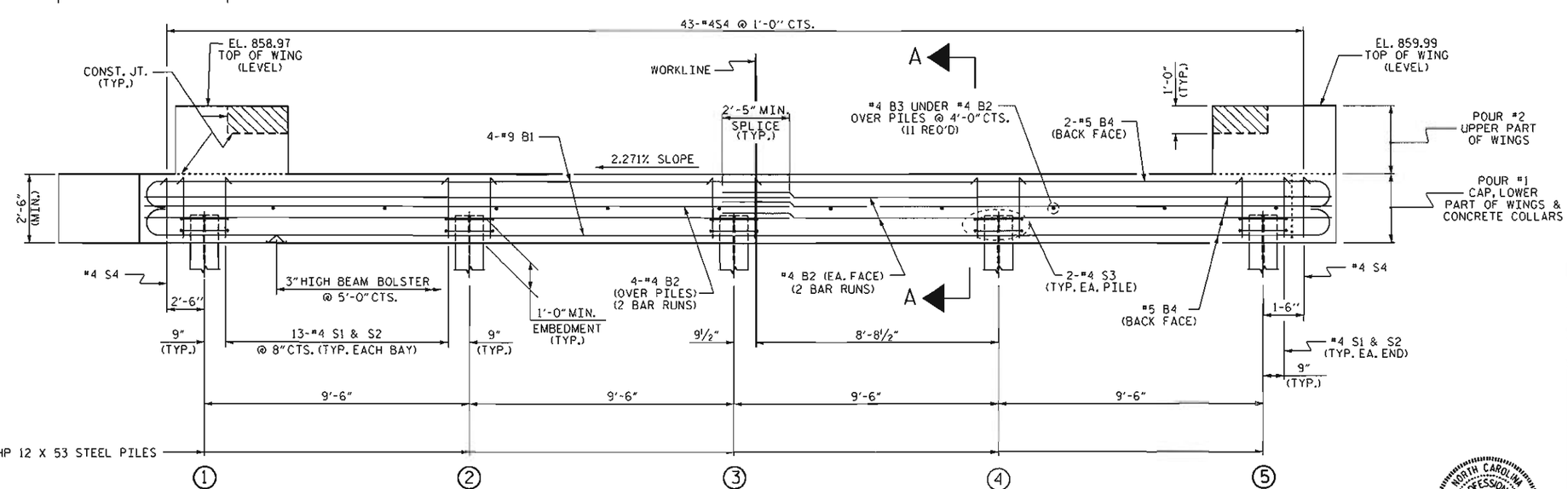

ELEVATION

WINGS NOT SHOWN FOR CLARITY.
FOR SECTION A-A, SEE SHEET 3 OF 3.
STEEL SHEET PILES NOT SHOWN IN ELEVATION VIEW FOR CLARITY.

ELEVATIONS OF NOTED POINTS		
	TOP OF CAP	BOTTOM OF CAP
POINT A	856.41	853.91
POINT B	856.47	853.97
POINT C	857.44	854.94
POINT D	857.49	854.99

TOP OF PILE ELEVATIONS	
1	855.03
2	855.25
3	855.46
4	855.68
5	855.89

PROJECT NO. BD-5114V
POLK COUNTY
STATION: 23+34.40 -L-

SHEET 1 OF 3

STATE OF NORTH CAROLINA
DEPARTMENT OF TRANSPORTATION
RALEIGH

SUBSTRUCTURE

END BENT No. 1

NORTH CAROLINA PROFESSIONAL SEAL 15779 ENGINEER DAN R. DUGGINS, JR.
5/10/12

ASSEMBLED BY : A. SORSENGINH	DATE : 11/16/2011
CHECKED BY : B. MATHEW	DATE : 11/28/2011
DRAWN BY : DGE 02/10	
CHECKED BY : MKT 02/10	

REVISIONS							SHEET NO.
NO.	BY:	DATE:	NO.	BY:	DATE:		S-13
1			3				TOTAL SHEETS
2			4				23

10-MAY-2012 10:10
S:\DPG4\John\LIBR_Files\BD-5114V\Final_Plans\BD-5114V_SD_E*.dgn
jduggins

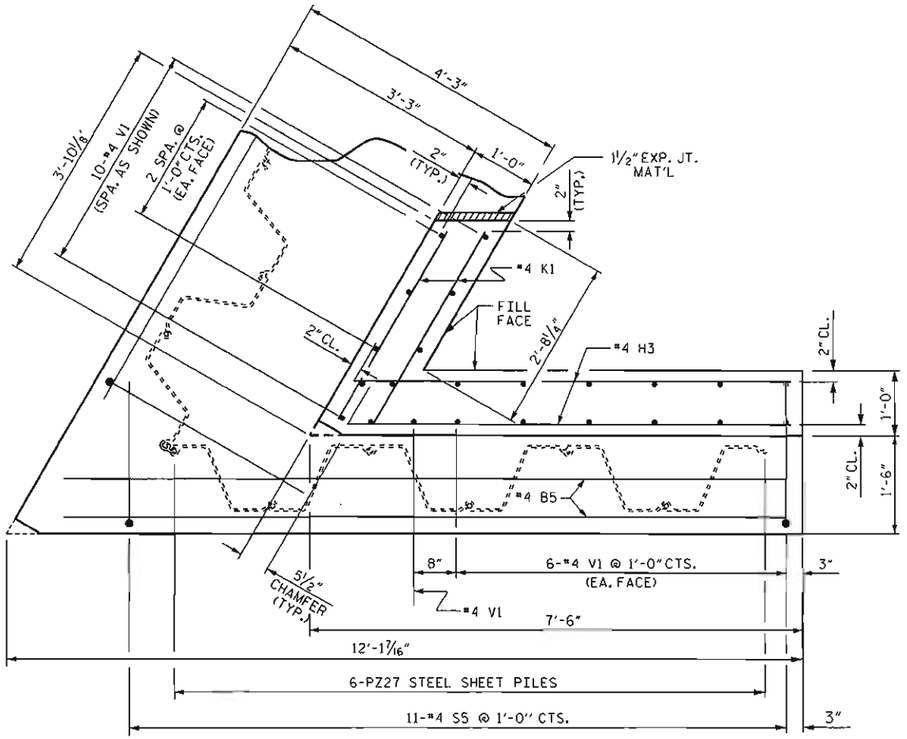

PLAN OF WING (W1)

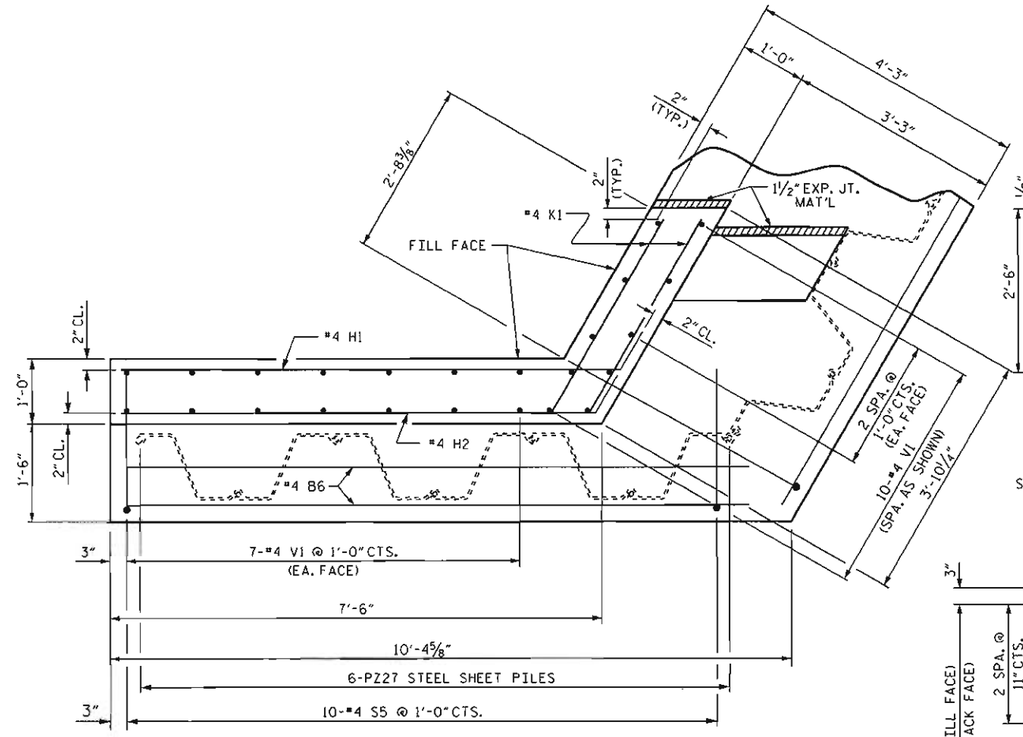

PLAN OF WING (W2)

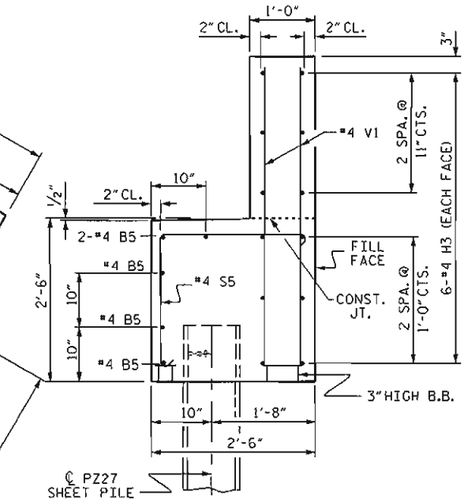

SECTION X-X

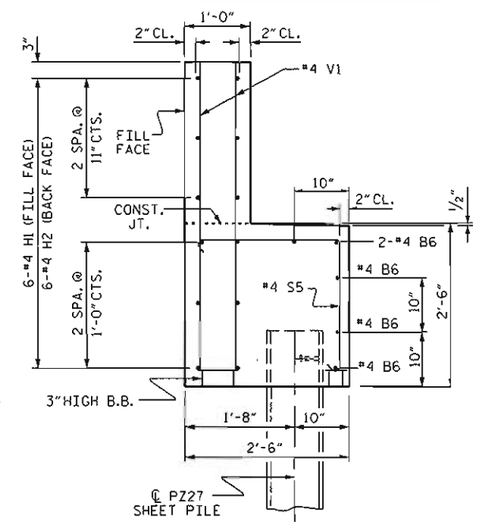

SECTION Y-Y

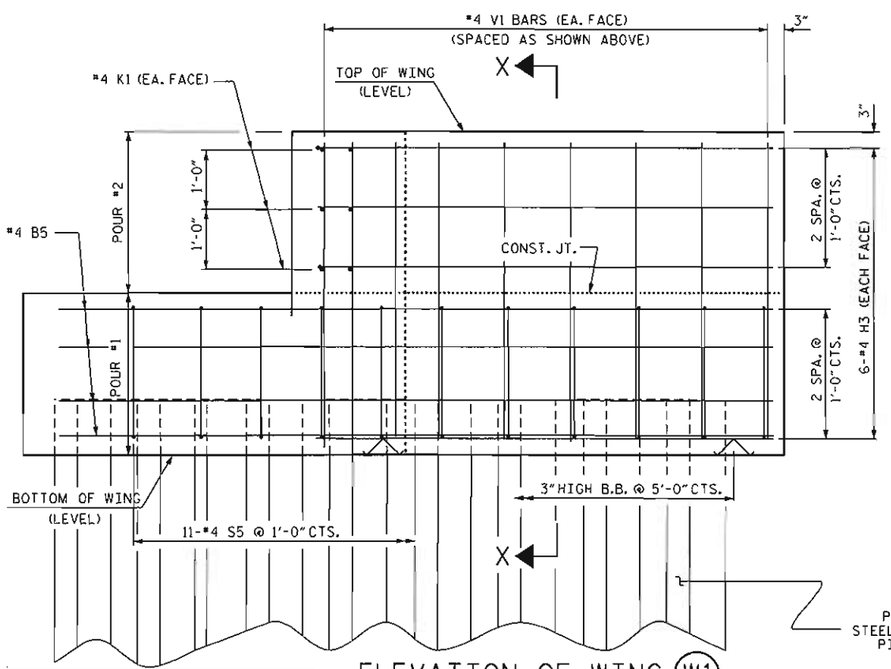

ELEVATION OF WING (W1)

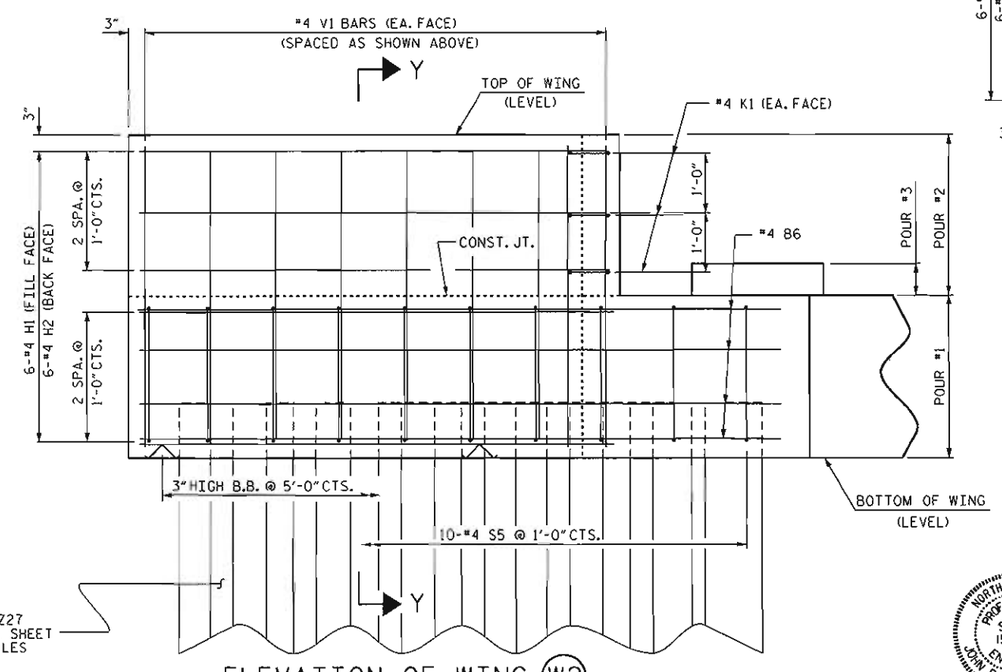

ELEVATION OF WING (W2)

WING DETAILS

PROJECT NO. BD-5114V

POLK COUNTY

STATION: 23+34.40 -L-

SHEET 2 OF 3

STATE OF NORTH CAROLINA
DEPARTMENT OF TRANSPORTATION
RALEIGH

SUBSTRUCTURE
END BENT No. 1
WING DETAILS

NORTH CAROLINA PROFESSIONAL SEAL 15779 ENGINEER JOHN R. DUGGINS, JR.
5/10/12

REVISIONS								SHEET NO.
NO.	BY:	DATE:	NO.	BY:	DATE:			S-14
1			3					TOTAL SHEETS
2			4					23

ASSEMBLED BY :	A. SORSENGINH	DATE :	11/16/11
CHECKED BY :	B. MATHEW	DATE :	11/28/11
DRAWN BY :	DGE	12/09	
CHECKED BY :	MKT	01/10	

10-MAY-2012 10:10
S:\DPG4\John\LTBR_Files\BD-5114V\Final_Plans\BD-5114V_SD_E*.dgn
jduggins

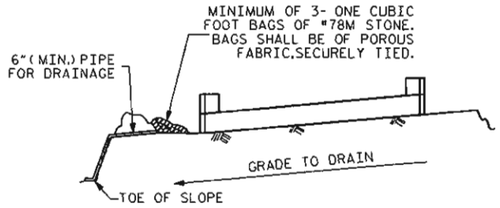

BAGGED STONE AND PIPE SHALL BE PLACED IMMEDIATELY AFTER COMPLETION OF END BENT EXCAVATION. PIPE MAY BE EITHER CONCRETE, CORRUGATED STEEL, CORRUGATED ALUMINUM ALLOY, OR CORRUGATED PLASTIC. PERFORATED PIPE WILL NOT BE ALLOWED.

BAGGED STONE SHALL REMAIN IN PLACE UNTIL THE ENGINEER DIRECTS THAT IT BE REMOVED. THE CONTRACTOR SHALL REMOVE AND DISPOSE OF SILT ACCUMULATIONS AT BAGGED STONE WHEN SO DIRECTED BY THE ENGINEER. BAGS SHALL BE REMOVED AND REPLACED WHENEVER THE ENGINEER DETERMINES THAT THEY HAVE DETERIORATED AND LOST THEIR EFFECTIVENESS.

NO SEPARATE PAYMENT WILL BE MADE FOR THIS WORK AND THE ENTIRE COST OF THIS WORK SHALL BE INCLUDED IN THE UNIT CONTRACT PRICE BID FOR THE SEVERAL PAY ITEMS.

TEMPORARY DRAINAGE AT END BENT

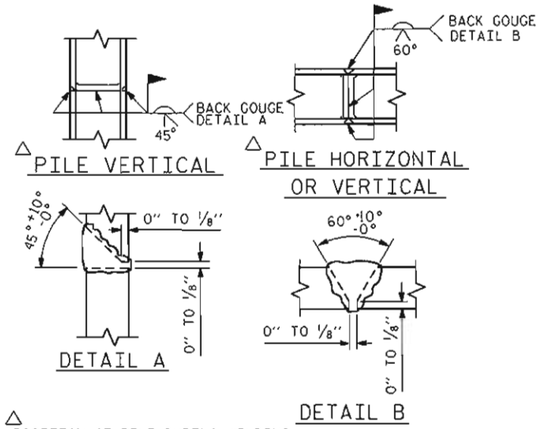

PILE SPLICE DETAILS

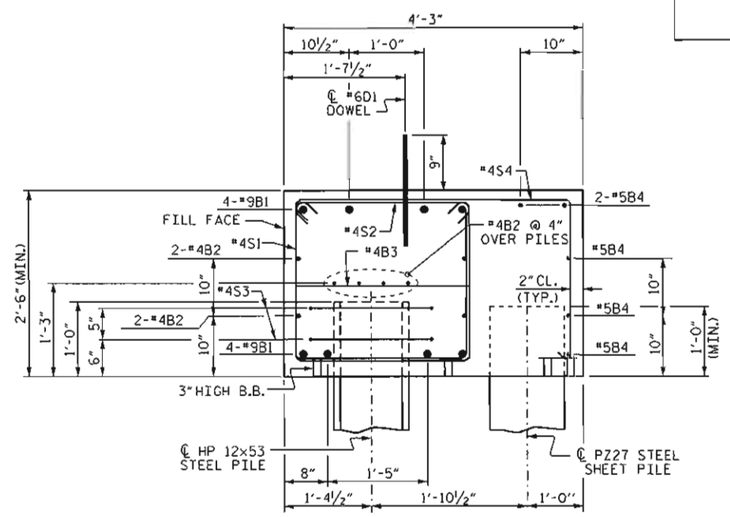

SECTION A-A

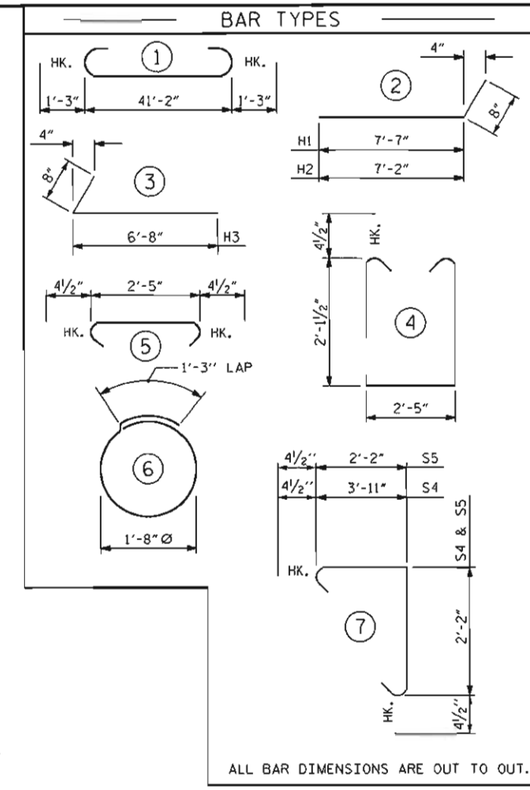

ALL BAR DIMENSIONS ARE OUT TO OUT.

BILL OF MATERIAL

BAR	NO.	SIZE	TYPE	LENGTH	WEIGHT
B1	8	#9	1	43'-8"	1188
B2	16	#4	STR	21'-11"	234
B3	11	#4	STR	2'-5"	18
B4	5	#5	STR	42'-3"	220
B5	5	#4	STR	11'-0"	37
B6	5	#4	STR	9'-6"	32
D1	20	#6	STR	1'-6"	45
H1	6	#4	2	8'-3"	33
H2	6	#4	2	7'-10"	31
H3	12	#4	3	7'-4"	59
K1	12	#4	STR	3'-3"	26
S1	54	#4	4	7'-5"	268
S2	54	#4	5	3'-2"	114
S3	10	#4	6	6'-6"	43
S4	43	#4	7	6'-10"	196
S5	21	#4	7	5'-1"	71
V1	47	#4	STR	4'-8"	147

REINFORCING STEEL 2762 LBS.

CLASS A CONCRETE BREAKDOWN

POUR #1 CAP & LOWER PART OF WINGS 20.7 C.Y.

POUR #2 UPPER PART OF WINGS 2.1 C.Y.

TOTAL CLASS A CONCRETE 22.8 C.Y.

HP 12 X 53 STEEL PILES

NO. 5 175.00 LN. FT.

18" STEEL SHEET PILES

NO. PZ27 = 40

NO. PZ90 = 1

NO. 135° CONNECTOR (COBRA) = 1

TOTAL NO. = 42 360 SQ. FT.

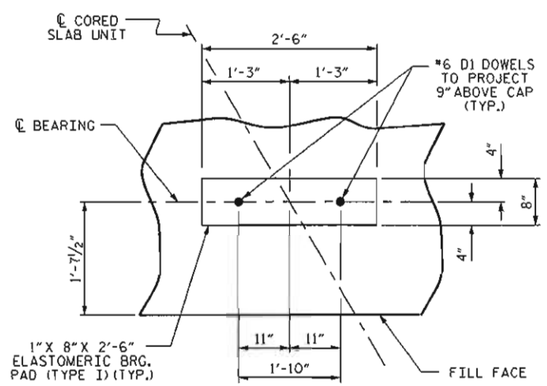

DETAIL "A"

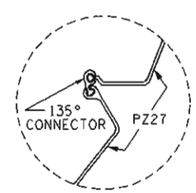

DETAIL "E"

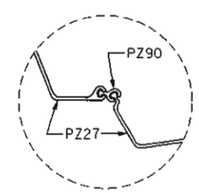

DETAIL "F"

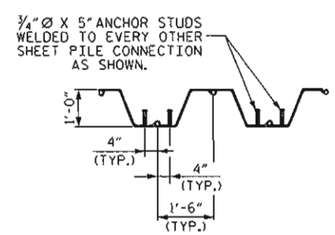

ANCHOR STUD DETAIL

PROJECT NO. BD-5114V

POLK COUNTY

STATION: 23+34.40 -L-

SHEET 3 OF 3

STATE OF NORTH CAROLINA
DEPARTMENT OF TRANSPORTATION
RALEIGH

SUBSTRUCTURE

END BENT No. 1
DETAILS

NORTH CAROLINA PROFESSIONAL SEAL 15779 ENGINEER JOHN R. DUGGINS, JR.
5/10/12

REVISIONS						SHEET NO.
NO.	BY:	DATE:	NO.	BY:	DATE:	3-15
1			3			TOTAL SHEETS
2			4			23

ASSEMBLED BY :	A. SORSENGNH	DATE :	11/16/2011
CHECKED BY :	B. MATHEW	DATE :	11/28/2011
DRAWN BY :	DGE	12/09	
CHECKED BY :	MKT	01/10	

10-MAY-2012 10:09
S:\DPG4\John\LIBR_Files\BD-5114V\Final_Plans\BD-5114V_SD_E*.dgn
jdugglns

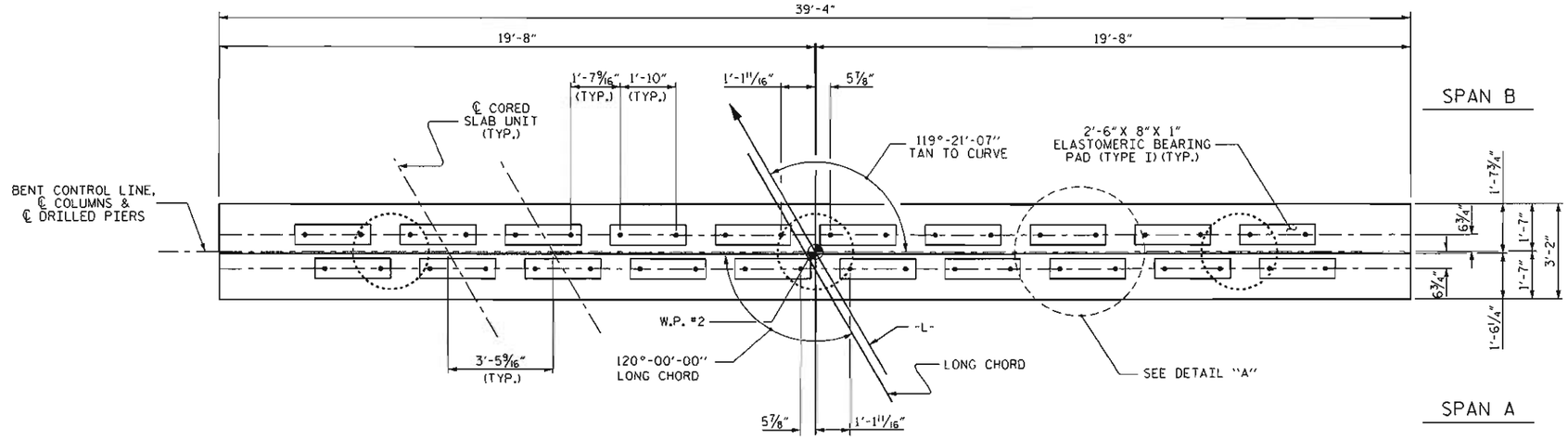

PLAN

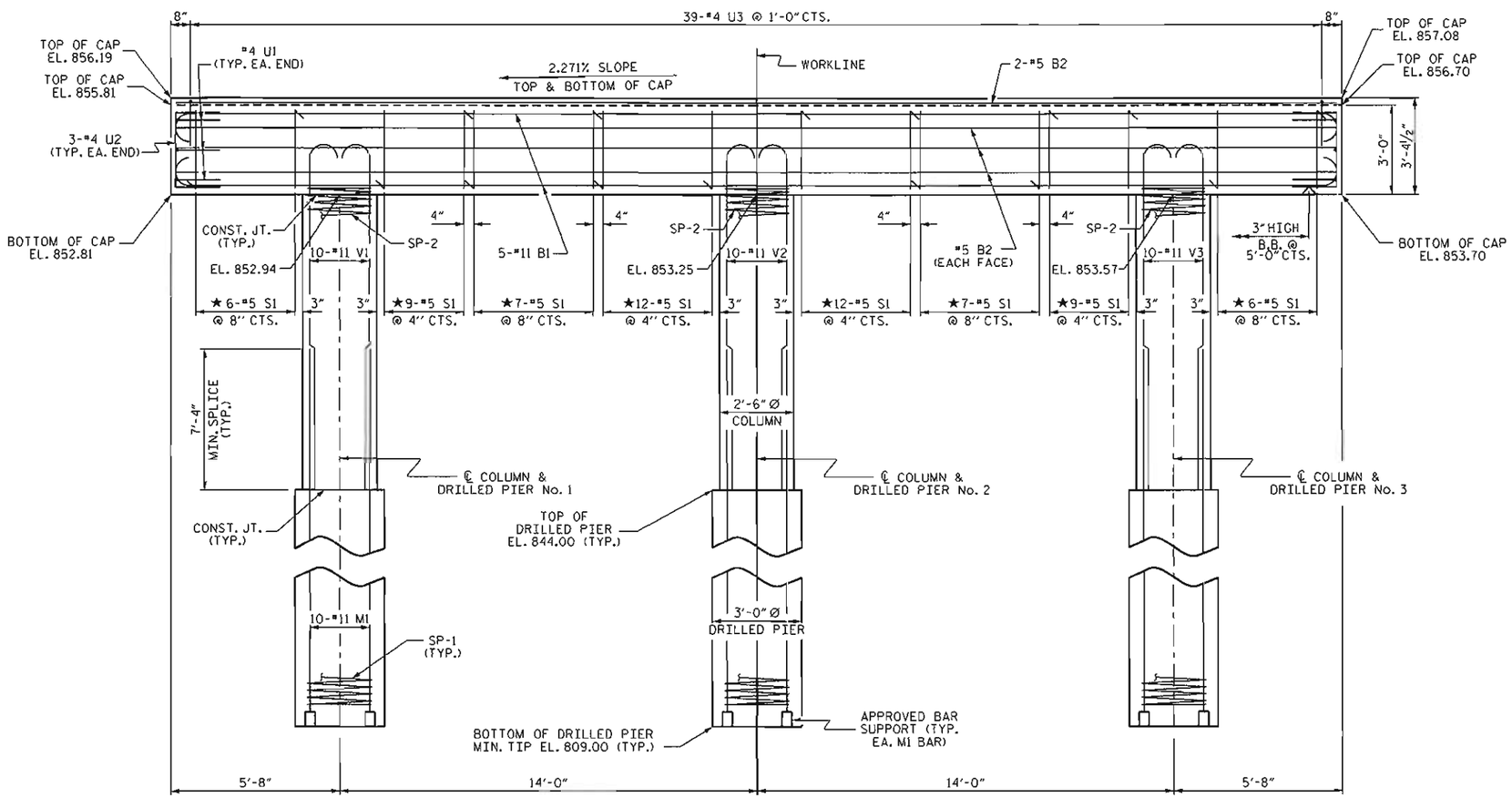

ELEVATION

DIMENSIONS & REINFORCING STEEL ARE TYPICAL FOR EACH COLUMN & DRILLED PIER UNLESS OTHERWISE NOTED.

NOTES

STIRRUPS IN CAP MAY BE SHIFTED AS NECESSARY TO CLEAR DOWELS.

HOOKS ON "V" BARS MAY BE TURNED AS NECESSARY FOR PLACING REINFORCING STEEL.

FOR DRILLED PIERS, SEE SECTION 411 OR STANDARD SPECIAL PROVISIONS.

ALL STEEL IN THE DRILLED PIERS IS INCLUDED IN THE PAY ITEMS FOR "REINFORCING STEEL" AND "SPIRAL COLUMN REINFORCING STEEL."

★ INVERT ALTERNATE STIRRUPS.

THE LOCATION OF THE CONSTRUCTION JOINT IN THE DRILLED PIERS IS BASED ON AN APPROXIMATE GROUND LINE ELEVATION. IF THE CONSTRUCTION JOINT IS ABOVE THE ACTUAL GROUND LINE ELEVATION, THE CONTRACTOR SHALL PLACE THE CONSTRUCTION JOINT ONE FOOT BELOW THE GROUND LINE.

THE CONTRACTOR'S ATTENTION IS CALLED TO THE FACT THAT THE LONGITUDINAL REINFORCEMENT FOR DRILLED PIERS IS DETAILED WITH 3 FEET OF EXTRA LENGTH.

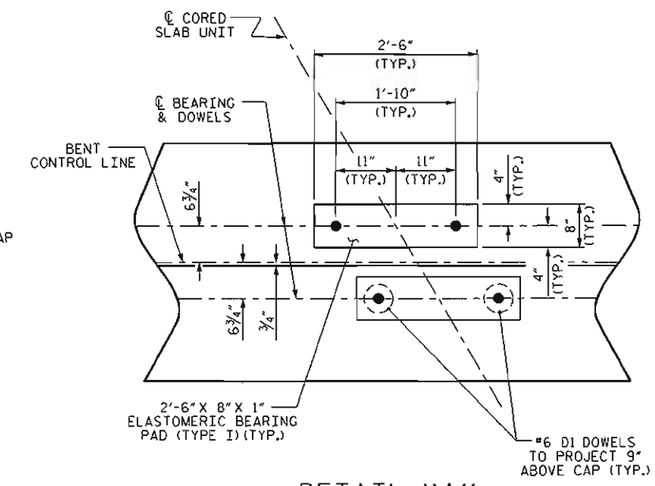

DETAIL "A"

(DIMENSIONS ARE TYPICAL EACH BEARING)

PROJECT NO. BD-5114V

POLK COUNTY

STATION: 23+34.40 -L-

SHEET 1 OF 2

STATE OF NORTH CAROLINA
DEPARTMENT OF TRANSPORTATION
RALEIGH

SUBSTRUCTURE

BENT No. 1

NORTH CAROLINA PROFESSIONAL SEAL 15779 ENGINEER JOHN W. DUGGINS, JR.

5/10/12

REVISIONS						SHEET NO.
NO.	BY:	DATE:	NO.	BY:	DATE:	S-16
1			3			TOTAL SHEETS
2			4			23

ASSEMBLED BY :	A. SORSENGINH	DATE :	10/10/2011
CHECKED BY :	B. MATHEW	DATE :	11/28/2011
DRAWN BY : DGE	03/10		
CHECKED BY : MKT	03/10		

10-MAY-2012 10:08
S:\OPC4\John\LIBR_Files\BD-5114V\Final_Plans\BD-5114V_SD_8".dgn
jdugginS

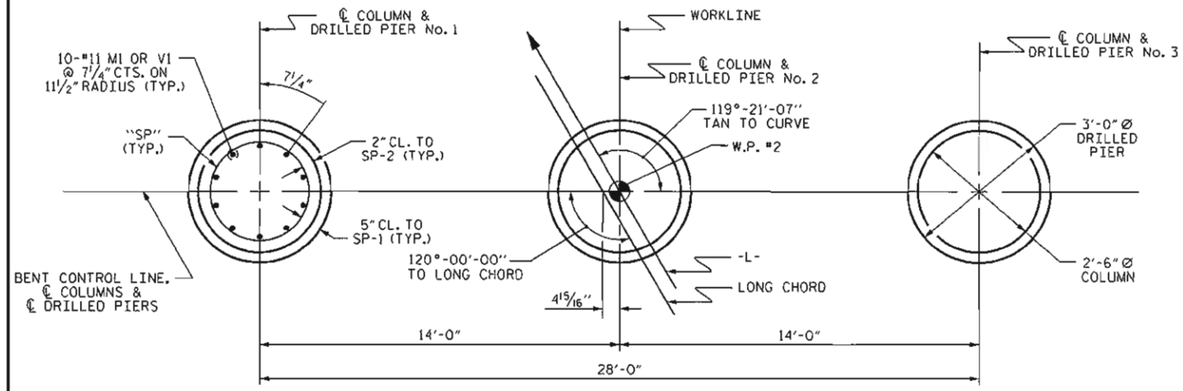

PLAN OF DRILLED PIERS & COLUMNS

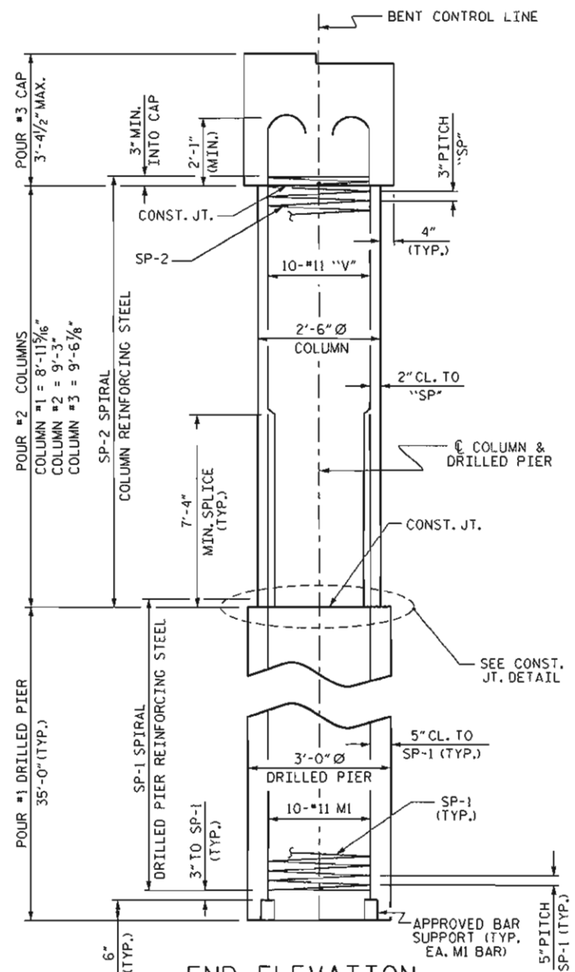

END ELEVATION

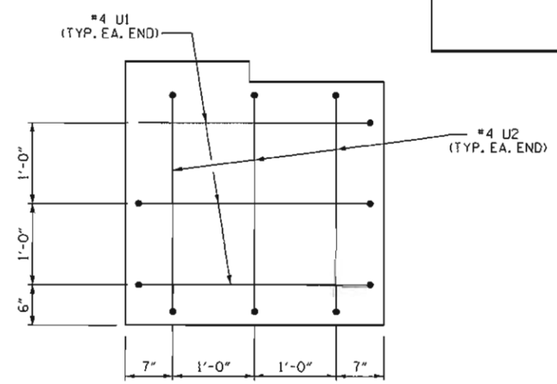

END OF CAP VIEW

(TYPICAL BOTH ENDS)

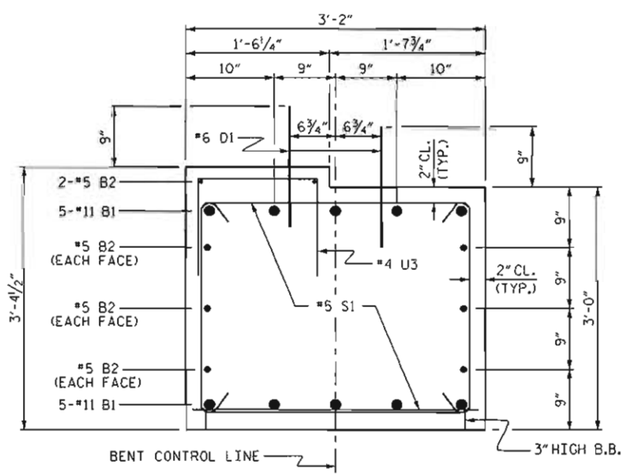

SECTION THRU CAP

BAR TYPES

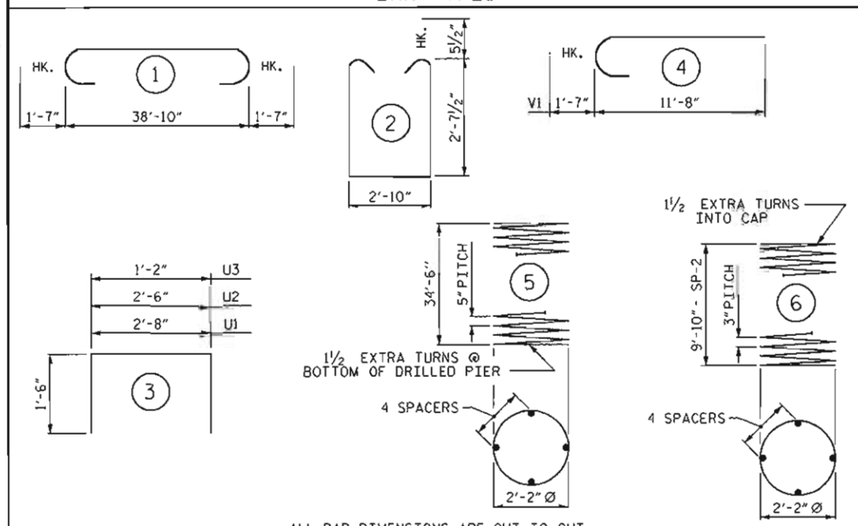

ALL BAR DIMENSIONS ARE OUT TO OUT

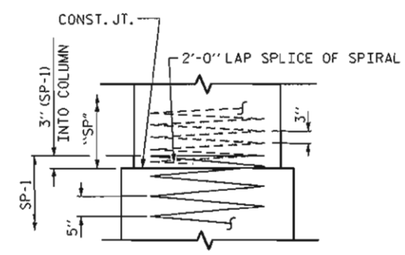

CONSTRUCTION JOINT DETAIL

BILL OF MATERIAL
FOR ONE BENT

BAR	NO.	SIZE	TYPE	LENGTH	WEIGHT
B1	10	#11	1	42'-0"	2231
B2	8	#5	STR	39'-0"	325
D1	40	#6	STR	1'-6"	90
M1	30	#11	STR	44'-10"	7146
S1	68	#5	2	9'-0"	638
U1	6	#4	3	5'-8"	23
U2	6	#4	3	5'-6"	22
U3	39	#4	3	4'-2"	109
V1	30	#11	4	13'-3"	2112
REINFORCING STEEL					12,696 LBS.
SP-1	3	*	5	565'-10"	1770
SP-2	3	**	6	273'-11"	549
SPIRAL COLUMN REINFORCING STEEL					2319 LBS.

* THE SP-1 SPIRAL REINFORCING STEEL SHALL BE W31 OR D-31 COLD DRAWN WIRE OR #5 PLAIN OR DEFORMED BAR

** THE SP-2 SPIRAL REINFORCING STEEL SHALL BE W20 OR D-20 COLD DRAWN WIRE OR #4 PLAIN OR DEFORMED BAR

CLASS A CONCRETE BREAKDOWN

POUR #2 (COLUMNS)	5.1 C.Y.
POUR #3 (CAP)	14.8 C.Y.
TOTAL CLASS A CONCRETE	19.9 C.Y.

DRILLED PIERS:

DRILLED PIER CONCRETE POUR #1 (DRILLED PIERS)	27.5 C.Y.
3'-0" Ø DRILLED PIER NOT IN SOIL	34.00 LIN. FT.
3'-0" Ø DRILLED PIER IN SOIL	71.00 LIN. FT.
PERMANENT STEEL CASING FOR 3'-0" Ø DRILLED PIER	33.00 LIN. FT.
CSL TUBES	438 LIN. FT.

PROJECT NO. BD-5114V

POLK COUNTY

STATION: 23+34.40 -L-

SHEET 2 OF 2

STATE OF NORTH CAROLINA
DEPARTMENT OF TRANSPORTATION
RALEIGH

SUBSTRUCTURE

BENT No. 1

NORTH CAROLINA PROFESSIONAL SEAL 15779 ENGINEER JOHN R. DUGGINS, JR.

5/10/12

ASSEMBLED BY :	A. SORSENGINH	DATE :	10/10/2011
CHECKED BY :	B. MATHEW	DATE :	11/28/2011
DRAWN BY :	DGE	03/10	
CHECKED BY :	MKT	03/10	

REVISIONS								SHEET NO.
NO.	BY:	DATE:	NO.	BY:	DATE:			S-17
1			3					TOTAL SHEETS
2			4					23

10-MAY-2012 10:08
S:\DPG4\John\LIBR_Files\BD-5114V\Final_Plans\BD-5114V_SD_B*.dgn
jduggins

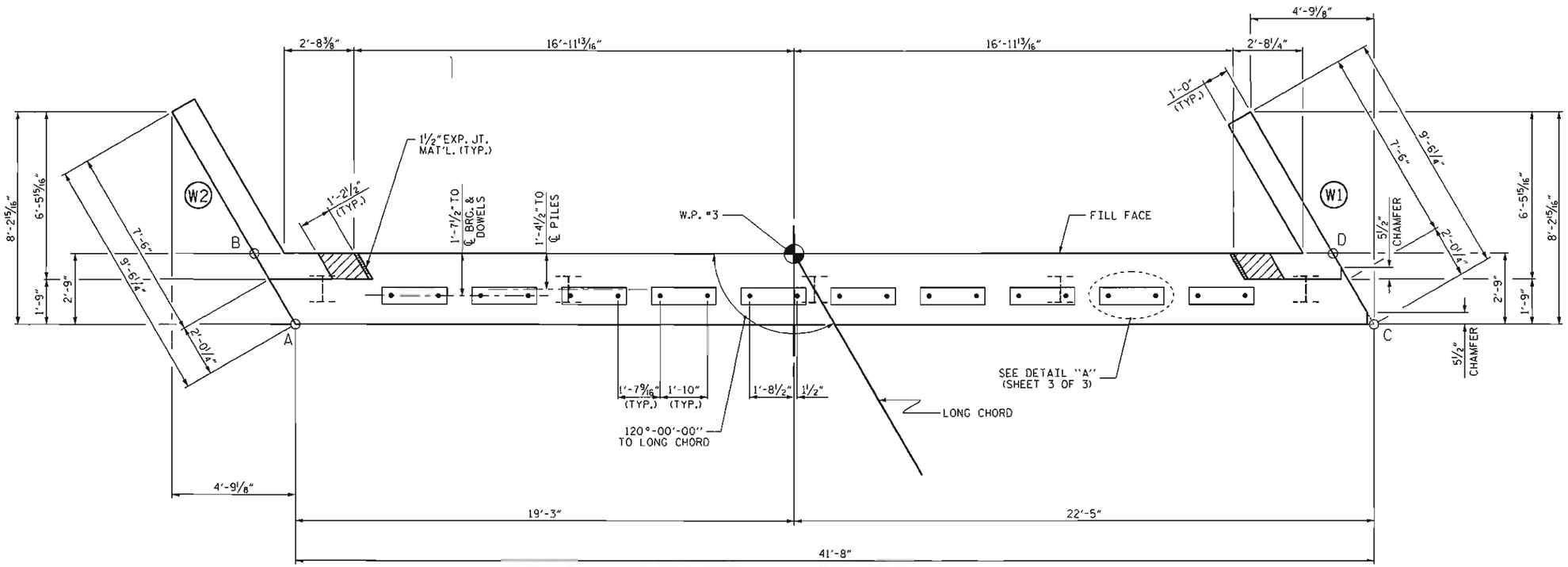

PLAN

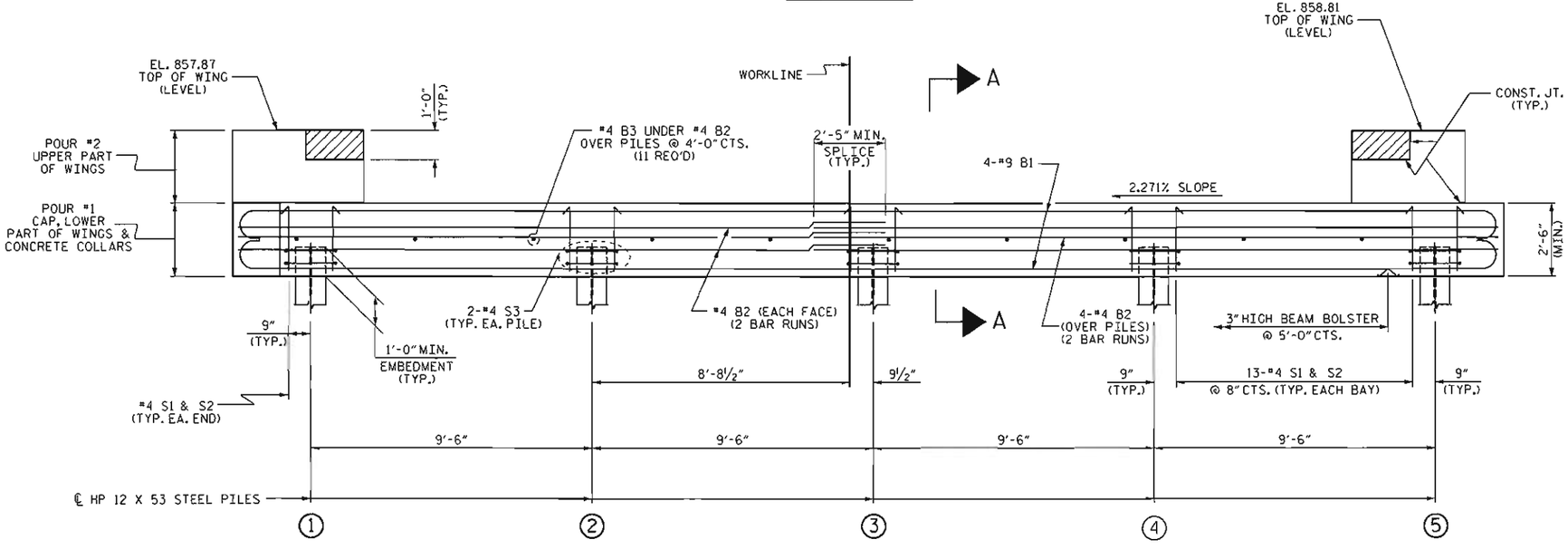

ELEVATION

WINGS NOT SHOWN FOR CLARITY.
FOR SECTION A-A, SEE SHEET 3 OF 3.
CONCRETE COLLARS FOR STEEL PILES NOT SHOWN IN PLAN AND ELEVATION VIEWS FOR CLARITY.
SEE "CORROSION PROTECTION FOR STEEL PILES DETAIL", SHEET 3 OF 3.

NOTES

STIRRUPS IN CAP MAY BE SHIFTED AS NECESSARY TO CLEAR DOWELS.

THE CONCRETE IN THE SHADED AREA OF THE WING SHALL BE POURED AFTER THE VERTICAL CONCRETE BARRIER RAIL IS CAST IF SLIP FORMING IS USED.

FOR PILE SPLICE DETAILS, SEE SHEET 3 OF 3.

FOR WING DETAILS, SEE SHEET 2 OF 3.

ELEVATIONS OF NOTED POINTS		
	TOP OF CAP	BOTTOM OF CAP
POINT A	855.15	852.65
POINT B	855.11	852.61
POINT C	856.10	853.60
POINT D	856.06	853.56

TOP OF PILE ELEVATIONS	
1	853.68
2	853.90
3	854.12
4	854.33
5	854.55

PROJECT NO. BD-5114V
POLK COUNTY
STATION: 23+34.40 -L-

SHEET 1 OF 3

STATE OF NORTH CAROLINA
DEPARTMENT OF TRANSPORTATION
RALEIGH

SUBSTRUCTURE

END BENT No. 2

NORTH CAROLINA PROFESSIONAL SEAL 15779 ENGINEER JOHN R. DUGGINS, JR.
5/10/12

REVISIONS							
NO.	BY:	DATE:	NO.	BY:	DATE:	SHEET NO. S-18
1			3			TOTAL SHEETS 23
2			4			

ASSEMBLED BY :	A. SORSENOINH	DATE :	11/16/2011
CHECKED BY :	B. MATHEW	DATE :	11/28/2011
DRAWN BY :	DGE	02/10	
CHECKED BY :	MKT	02/10	

10-MAY-2012 10:07
S:\DPG4\John\LIBR_Files\BD-5114V\Final_Plans\BD-5114V_SD_E*.dgn
jduggins

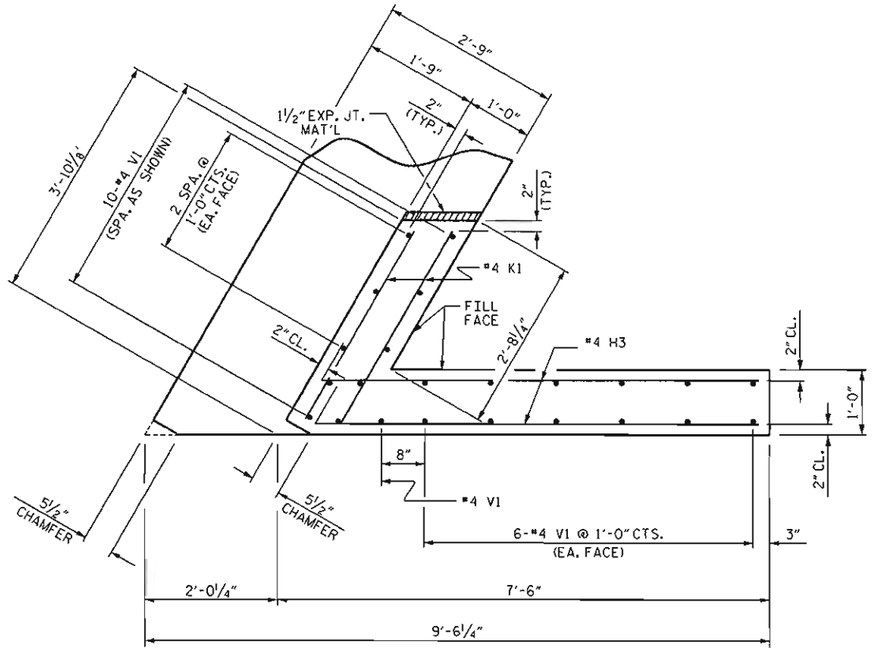

PLAN OF WING (W1)

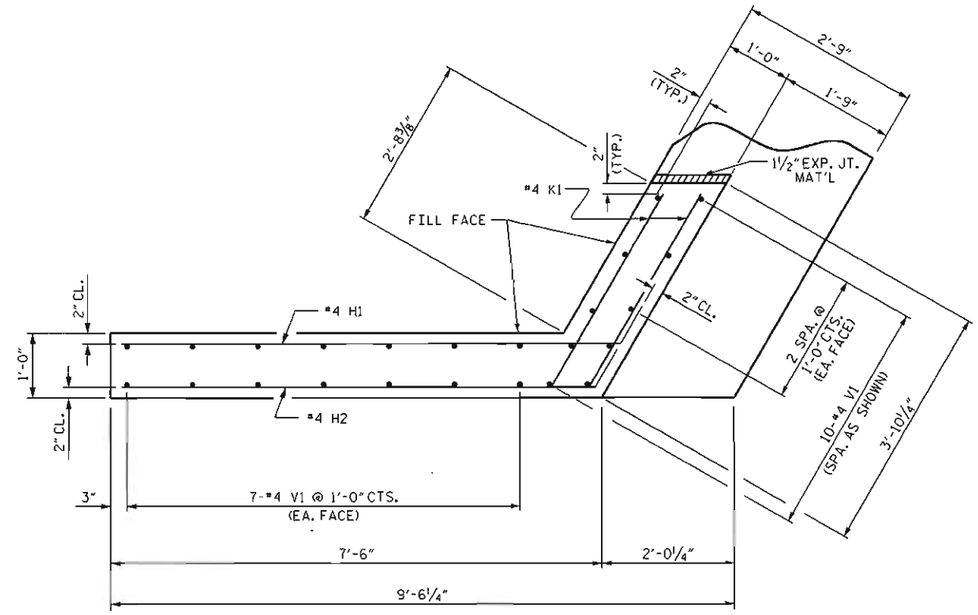

PLAN OF WING (W2)

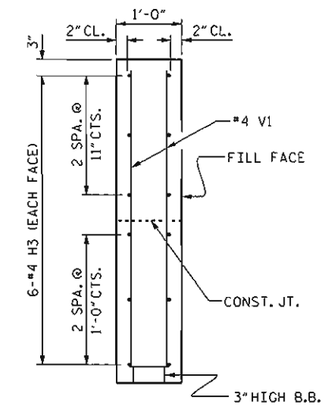

SECTION X-X

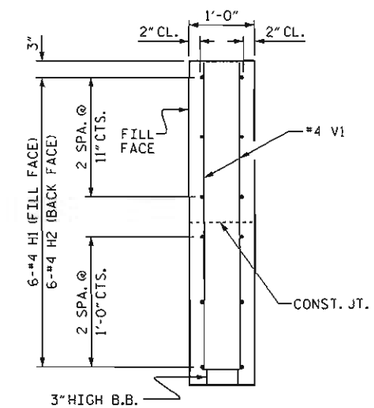

SECTION Y-Y

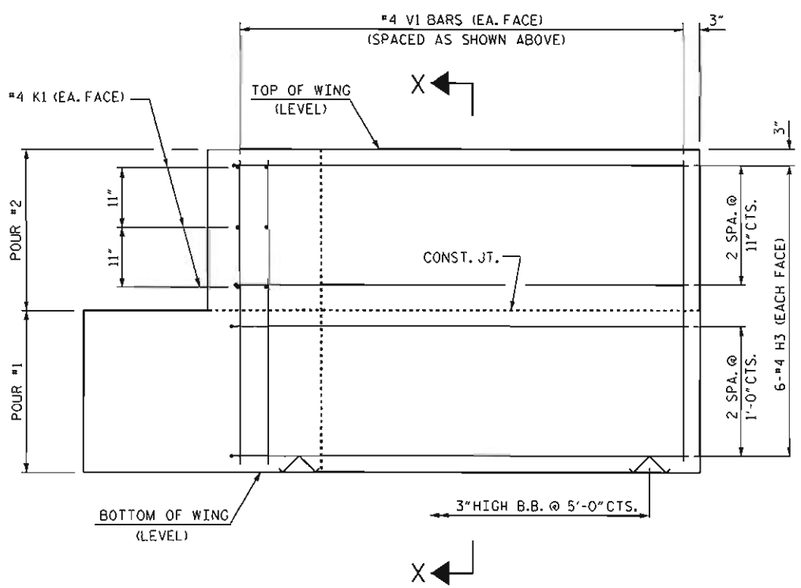

ELEVATION OF WING (W1)

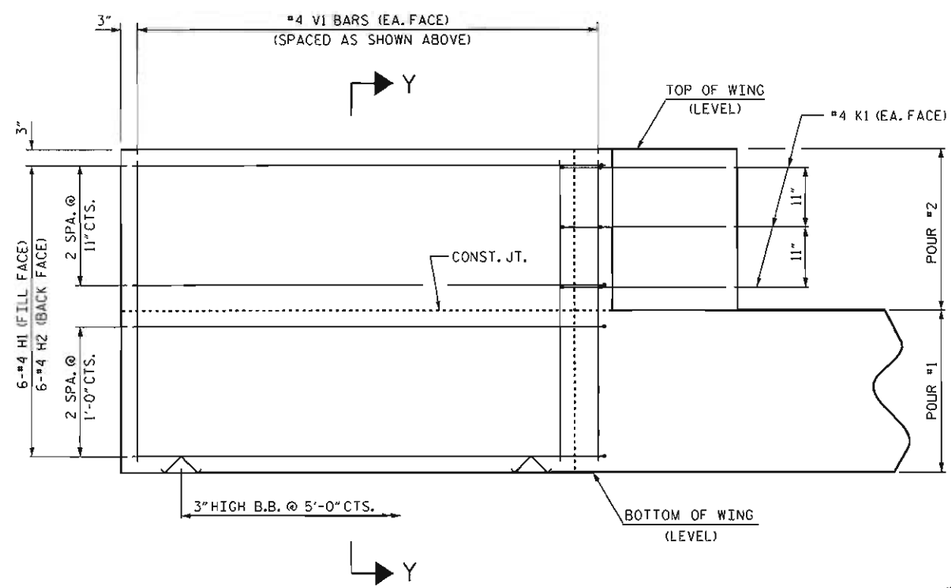

ELEVATION OF WING (W2)

WING DETAILS

PROJECT NO. BD-5114V

POLK COUNTY

STATION: 23+34.40 -L-

SHEET 2 OF 3

STATE OF NORTH CAROLINA
DEPARTMENT OF TRANSPORTATION
RALEIGH

SUBSTRUCTURE
END BENT No. 2
WING DETAILS

NORTH CAROLINA PROFESSIONAL SEAL 15779 ENGINEER JOHN R. DUGGINS, JR.
5/10/12

ASSEMBLED BY :	A. SORSENONH	DATE :	11/16/11
CHECKED BY :	B. MATHEW	DATE :	11/28/11
DRAWN BY :	DGE	12/09	
CHECKED BY :	MKT	01/10	

REVISIONS						SHEET NO.
NO.	BY:	DATE:	NO.	BY:	DATE:	S-19
1			3			TOTAL SHEETS
2			4			23

10-MAY-2012 10:07
S:\DPG4\John\LIBR_Files\BD-5114V\Final_Plans\BD-5114V_SD_E*.dgn
jduggins

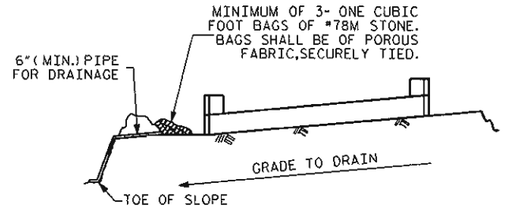

BAGGED STONE AND PIPE SHALL BE PLACED IMMEDIATELY AFTER COMPLETION OF END BENT EXCAVATION. PIPE MAY BE EITHER CONCRETE, CORRUGATED STEEL, CORRUGATED ALUMINUM ALLOY, OR CORRUGATED PLASTIC. PERFORATED PIPE WILL NOT BE ALLOWED.

BAGGED STONE SHALL REMAIN IN PLACE UNTIL THE ENGINEER DIRECTS THAT IT BE REMOVED. THE CONTRACTOR SHALL REMOVE AND DISPOSE OF SILT ACCUMULATIONS AT BAGGED STONE WHEN SO DIRECTED BY THE ENGINEER. BAGS SHALL BE REMOVED AND REPLACED WHENEVER THE ENGINEER DETERMINES THAT THEY HAVE DETERIORATED AND LOST THEIR EFFECTIVENESS.

NO SEPARATE PAYMENT WILL BE MADE FOR THIS WORK AND THE ENTIRE COST OF THIS WORK SHALL BE INCLUDED IN THE UNIT CONTRACT PRICE BID FOR THE SEVERAL PAY ITEMS.

TEMPORARY DRAINAGE AT END BENT

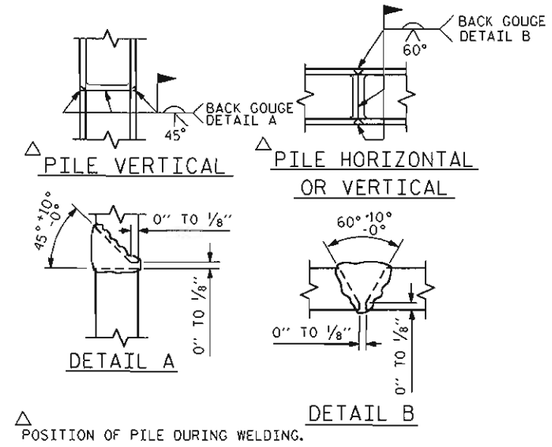

△ POSITION OF PILE DURING WELDING.

PILE SPLICE DETAILS

BAR TYPES

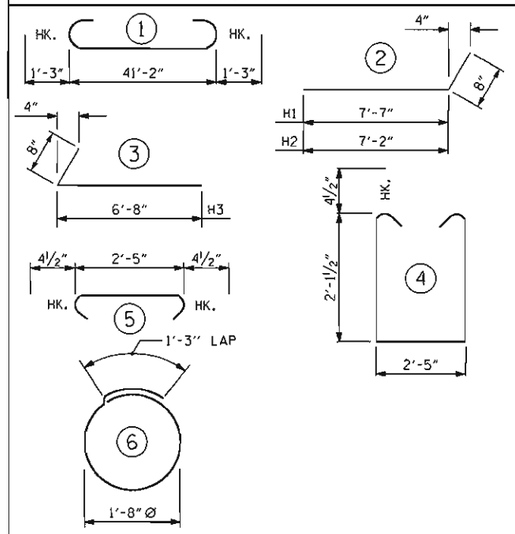

ALL BAR DIMENSIONS ARE OUT TO OUT.

BILL OF MATERIAL

BAR	NO.	SIZE	TYPE	LENGTH	WEIGHT
B1	8	#9	1	43'-8"	1188
B2	16	#4	STR	21'-11"	234
B3	11	#4	STR	2'-5"	18
D1	20	#6	STR	1'-6"	45
H1	6	#4	2	8'-3"	33
H2	6	#4	2	7'-10"	31
H3	12	#4	3	7'-4"	59
K1	12	#4	STR	3'-3"	26
S1	54	#4	4	7'-5"	268
S2	54	#4	5	3'-2"	114
S3	10	#4	6	6'-6"	43
V1	47	#4	STR	4'-8"	147
REINFORCING STEEL					2206 LBS.

CLASS A CONCRETE BREAKDOWN

POUR #1	CAP, LOWER PART OF WINGS & COLLARS	12.7 C.Y.
POUR #2	UPPER PART OF WINGS	2.1 C.Y.
TOTAL CLASS A CONCRETE		14.8 C.Y.

HP 12 X 53 STEEL PILES

NO: 5 LIN. FT.= 200

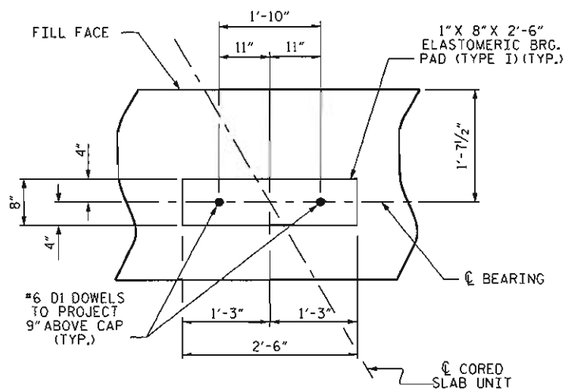

DETAIL "A"

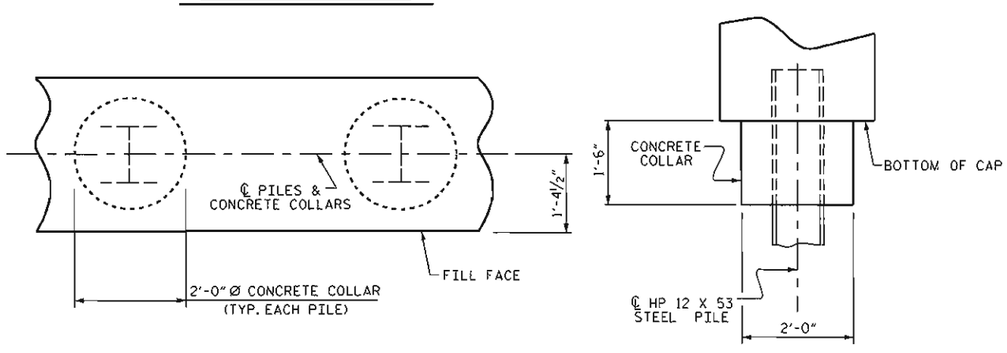

PLAN

ELEVATION

CORROSION PROTECTION FOR STEEL PILES DETAIL

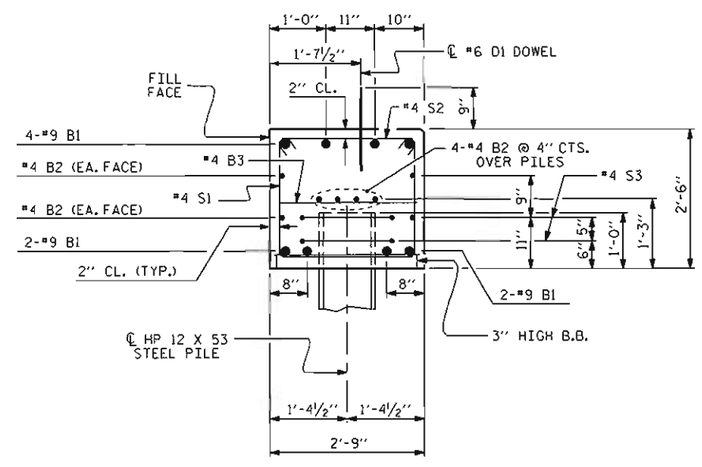

SECTION A-A

(CONCRETE COLLAR NOT SHOWN FOR CLARITY. SEE "CORROSION PROTECTION FOR STEEL PILES DETAIL.")

NORTH CAROLINA PROFESSIONAL SEAL 15779 ENGINEER JOHN R. DUGGINS, JR.

5/10/12

PROJECT NO. BD-5114V

POLK COUNTY

STATION: 23+34.40 -L-

SHEET 3 OF 3

STATE OF NORTH CAROLINA
DEPARTMENT OF TRANSPORTATION
RALEIGH

SUBSTRUCTURE

END BENT No. 2
DETAILS

REVISIONS						SHEET NO.
NO.	BY:	DATE:	NO.	BY:	DATE:	S-20
1			3			TOTAL SHEETS
2			4			23

ASSEMBLED BY :	A. SORSENGINH	DATE :	11/16/2011
CHECKED BY :	B. MATHEW	DATE :	11/28/2011
DRAWN BY :	DGE	12/09	
CHECKED BY :	MKT	01/10	

10-MAY-2012 14:58
S:\OP04\John\LTBR_Files\BD-5114V\Final_Plans\BD-5114V_SD_E*.dgn
jduggins

ESTIMATED QUANTITIES		
BRIDGE @ STA. 23+34.40 -L-	RIP RAP CLASS II (2'-0" THICK)	GEOTEXTILE FOR DRAINAGE
	TONS	SQUARE YARDS
END BENT 1	145	160
END BENT 2	120	135

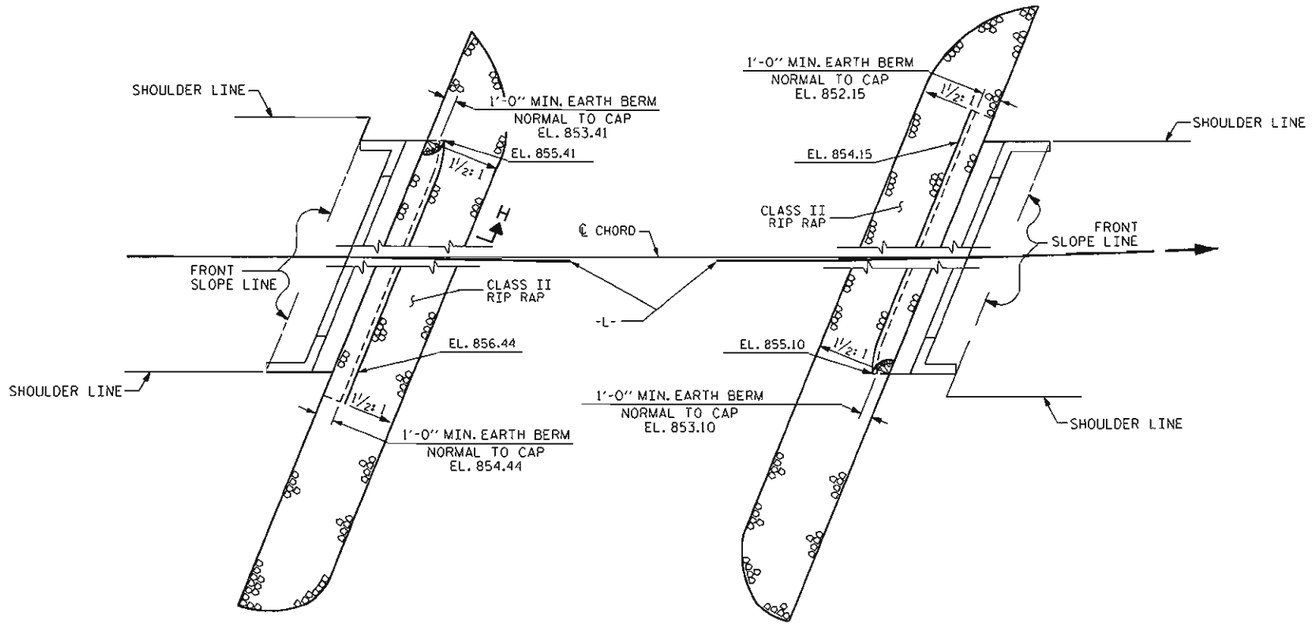

END BENT #1

END BENT #2

PLAN

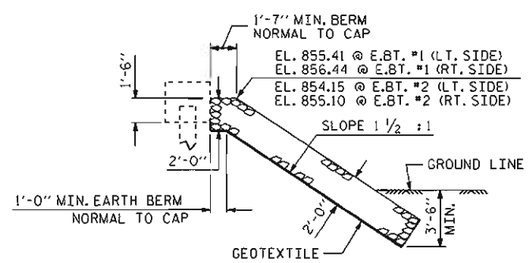

℄ SECTION

BERM RIP RAPPED

PROJECT NO. BD-5114V

POLK COUNTY

STATION: 23+34.40 -L-

STATE OF NORTH CAROLINA
DEPARTMENT OF TRANSPORTATION
RALEIGH

STANDARD

RIP RAP DETAILS

NORTH CAROLINA PROFESSIONAL SEAL 15779 ENGINEER JOHN R. DUGGINS, JR.
5/10/12

REVISIONS						SHEET NO.
NO.	BY:	DATE:	NO.	BY:	DATE:	S-21
1			3			TOTAL SHEETS
2			4			23

ASSEMBLED BY : A. SORSENGINH		DATE :	11/16/11
CHECKED BY : B. MATHEW		DATE :	11/28/11
DRAWN BY : REK 1/84	REV. 10/17/00		RWW/LES
CHECKED BY : RDU 1/84	REV. 5/1/06R		TLA/CM
	REV. 10/1/11		MAA/CM

10-MAY-2012 10:05
S:\DPG4\John\LIBR_Files\BD-5114V\Final_Plans\BD-5114V_SD_RR.dgn
jduggins

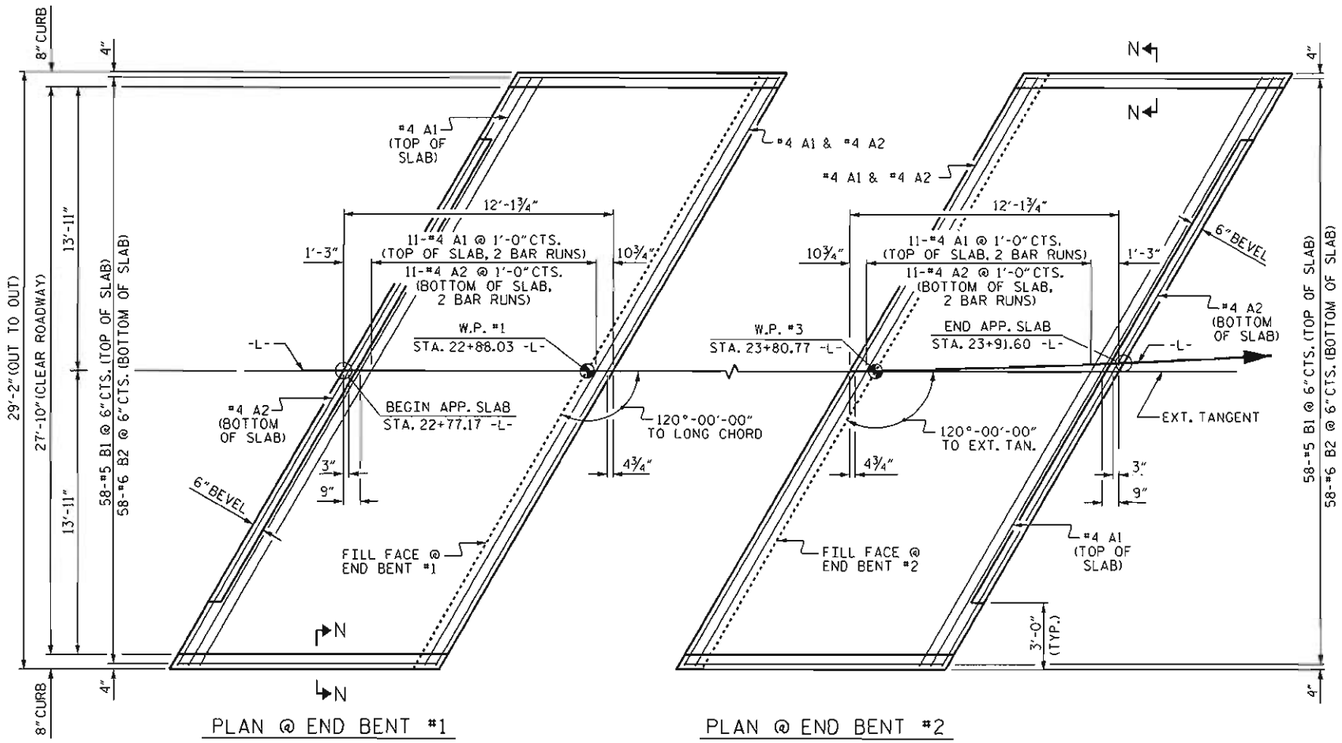

NOTES

FOR BRIDGE APPROACH FILL INCLUDING GEOTEXTILE, 4" Ø DRAINAGE PIPE, AND #78M STONE BACKFILL, SEE ROADWAY PLANS.

GEOTEXTILE SHALL BE TYPE 1 IN ACCORDANCE WITH THE STANDARD SPECIFICATIONS SECTION 1056.

#78M STONE BACKFILL (CLASS V SELECT MATERIAL) SHALL BE IN ACCORDANCE WITH STANDARD SPECIFICATIONS SECTION 1016.

#78M STONE BACKFILL IS TO BE CONTINUOUS ALONG FILL FACE OF BACKWALL FROM OUTSIDE EDGE TO OUTSIDE EDGE OF APPROACH SLAB.

FOR THE 4" Ø DRAINAGE PIPE OUTLET(S), SEE ROADWAY STANDARD DRAWINGS.

AREA BETWEEN THE WINGWALL AND APPROACH SLAB SHALL BE GRADED TO DRAIN THE WATER AWAY FROM THE FILL FACE OF THE BRIDGE AND SHALL BE PAVED. SEE ROADWAY PLANS.

APPROACH SLAB GROOVING IS NOT REQUIRED.

BILL OF MATERIAL

APPROACH SLAB AT EB #1

BAR	NO.	SIZE	TYPE	LENGTH	WEIGHT
* A1	26	#4	STR	17'-8"	307
A2	26	#4	STR	17'-7"	305
* B1	58	#5	STR	11'-1"	670
B2	58	#6	STR	11'-7"	1009
REINFORCING STEEL				LBS.	1314
* EPOXY COATED REINFORCING STEEL				LBS.	977
CLASS AA CONCRETE				C.Y.	17.1

APPROACH SLAB AT EB #2

BAR	NO.	SIZE	TYPE	LENGTH	WEIGHT
* A1	26	#4	STR	17'-8"	307
A2	26	#4	STR	17'-7"	305
* B1	58	#5	STR	11'-1"	670
B2	58	#6	STR	11'-7"	1009
REINFORCING STEEL				LBS.	1314
* EPOXY COATED REINFORCING STEEL				LBS.	977
CLASS AA CONCRETE				C.Y.	18.5

SPLICE LENGTHS

BAR SIZE	EPOXY COATED	UNCOATED
#4	2'-0"	1'-9"
#5	2'-6"	2'-2"
#6	3'-10"	2'-7"

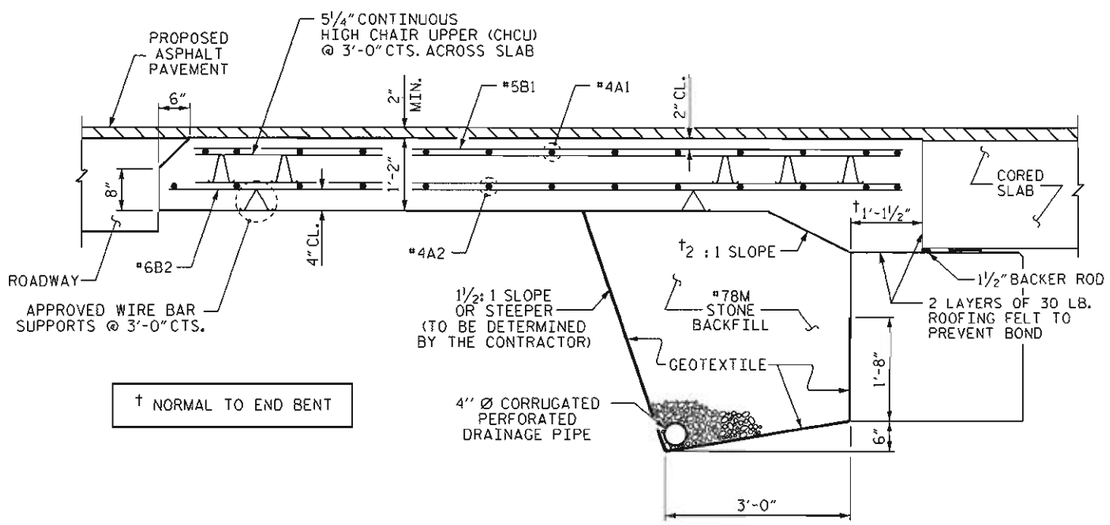

SECTION THRU SLAB

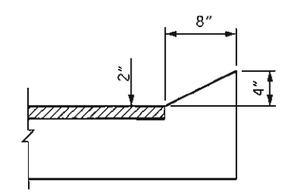

SECTION N-N

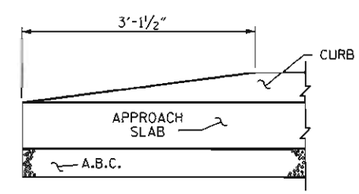

END OF CURB WITHOUT SHOULDER BERM GUTTER

CURB DETAILS

PROJECT NO. BD-5114V

POLK COUNTY

STATION: 23+34.40 -L-

SHEET 1 OF 2

STATE OF NORTH CAROLINA
DEPARTMENT OF TRANSPORTATION
RALEIGH

STANDARD

BRIDGE APPROACH SLAB FOR PRESTRESSED CONCRETE CORED SLAB UNIT (SUB-REGIONAL TIER)

NORTH CAROLINA PROFESSIONAL SEAL 15779 ENGINEER JOHN R. DUGGINS, JR.
5/10/12

REVISIONS							SHEET NO.
NO.	BY:	DATE:	NO.	BY:	DATE:		S-22
1			3				TOTAL SHEETS
2			4				23

ASSEMBLED BY : A. SORSENGINH	DATE : 11/16/11		
CHECKED BY : B. MATHEW	DATE : 11/28/11		
DRAWN BY : KMM 3-08	REV. 9/27/11	MAA/GM	
CHECKED BY : GM 3-08	REV. 10/1/11	MAA/GM	

10-MAY-2012 10:04
S:\DPG4\John\LIBR_Files\BD-5114V\Final_Plans\BD-5114V_SD_AS.dgn
jduggins

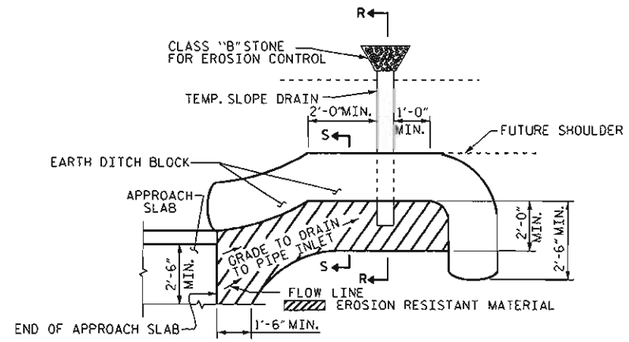

NOTE: IMMEDIATELY AFTER THE CONSTRUCTION OF THE APPROACH SLAB, THE CONTRACTOR SHALL PROVIDE TEMPORARY BERM AND SLOPE DRAIN. CONTRACTOR SHALL GRADE TO PIPE INLET AND PROVIDE EROSION RESISTANT MATERIAL AS SHOWN. THE EROSION RESISTANT MATERIAL SHALL BE EITHER 1) ASPHALT PLANT MIX, TYPE 1 OR TYPE 2, MIN. 2" DEPTH, 2) EROSION CONTROL MAT, OR 3) CONCRETE, AS DIRECTED BY THE ENGINEER. THE SLOPE DRAIN SHALL CONSIST OF A NON-PERFORATED TEMPORARY DRAINAGE PIPE, 12 INCHES IN DIAMETER.

PLAN VIEW

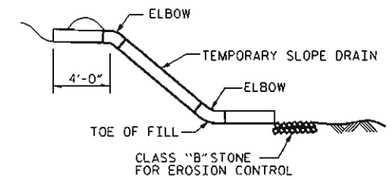

SECTION R-R

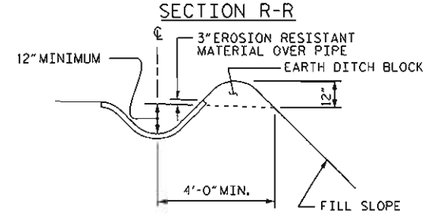

SECTION S-S

TEMPORARY BERM AND SLOPE DRAIN DETAILS

(TO BE USED WHEN SHOULDER BERM GUTTER IS REQUIRED)

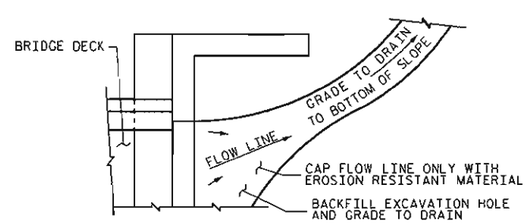

NOTE: IF THE APPROACH SLAB IS NOT CONSTRUCTED IMMEDIATELY AFTER THE BACKFILLING OF THE END BENT EXCAVATION, GRADE TO DRAIN TO THE BOTTOM OF THE SLOPE AND PROVIDE EROSION RESISTANT MATERIAL, SUCH AS FIBERGLASS ROVING OR AS DIRECTED BY THE ENGINEER TO PREVENT SOIL EROSION AND TO PROTECT THE AREA ADJACENT TO THE STRUCTURE. THE CONTRACTOR WILL BE REQUIRED TO REMOVE THESE MATERIALS PRIOR TO CONSTRUCTION OF THE APPROACH SLAB.

TEMPORARY DRAINAGE DETAIL

PROJECT NO. BD-5114V

POLK COUNTY

STATION: 23+34.40 -L-

SHEET 2 OF 2

STATE OF NORTH CAROLINA
DEPARTMENT OF TRANSPORTATION
RALEIGH

BRIDGE APPROACH SLAB DETAILS

NORTH CAROLINA PROFESSIONAL SEAL 15779 ENGINEER JOHN R. DUGGINS, JR.

5/10/12

REVISIONS						SHEET NO.
NO.	BY:	DATE:	NO.	BY:	DATE:	S-23
1			3			TOTAL SHEETS
2			4			23

DRAWN BY : A. SORSENGINH DATE : 11/2011
CHECKED BY : B. MATHEW DATE : 11/2011

10-MAY-2012 10:04
S:\OPG4\John\LIBR_Files\BD-5114V\Final_Plans\BD-5114V_S0_AS.dgn
jduggins

STANDARD NOTES

DESIGN DATA:

SPECIFICATIONS	A.A.S.H.T.O. (CURRENT)
LIVE LOAD	SEE PLANS
IMPACT ALLOWANCE	SEE A.A.S.H.T.O.
STRESS IN EXTREME FIBER OF	
STRUCTURAL STEEL - AASHTO M270 GRADE 36	20,000 LBS. PER SQ. IN.
- AASHTO M270 GRADE 50W	27,000 LBS. PER SQ. IN.
- AASHTO M270 GRADE 50	27,000 LBS. PER SQ. IN.
REINFORCING STEEL IN TENSION	
GRADE 60	24,000 LBS. PER SQ. IN.
CONCRETE IN COMPRESSION	1,200 LBS. PER SQ. IN.
CONCRETE IN SHEAR	SEE A.A.S.H.T.O.
STRUCTURAL TIMBER - TREATED OR	
UNTREATED - EXTREME FIBER STRESS	1,800 LBS. PER SQ. IN.
COMPRESSION PERPENDICULAR TO GRAIN OF TIMBER	375 LBS. PER SQ. IN.
EQUIVALENT FLUID PRESSURE OF EARTH	30 LBS. PER CU. FT. (MINIMUM)

MATERIAL AND WORKMANSHIP:

EXCEPT AS MAY OTHERWISE BE SPECIFIED ON PLANS OR IN THE SPECIAL PROVISIONS, ALL MATERIAL AND WORKMANSHIP SHALL BE IN ACCORDANCE WITH THE 2012 "STANDARD SPECIFICATIONS FOR ROADS AND STRUCTURES" OF THE N. C. DEPARTMENT OF TRANSPORTATION.

STEEL SHEET PILING FOR PERMANENT OR TEMPORARY APPLICATIONS SHALL BE HOT ROLLED.

CONCRETE:

UNLESS OTHERWISE REQUIRED ON PLANS, CLASS A CONCRETE SHALL BE USED FOR ALL PORTIONS OF ALL STRUCTURES WITH THE EXCEPTION THAT: CLASS AA CONCRETE SHALL BE USED IN BRIDGE SUPERSTRUCTURES, ABUTMENT BACKWALLS, AND APPROACH SLABS; AND CLASS B CONCRETE SHALL BE USED FOR SLOPE PROTECTION AND RIP RAP.

CONCRETE CHAMFERS:

UNLESS OTHERWISE NOTED ON THE PLANS, ALL EXPOSED CORNERS ON STRUCTURES SHALL BE CHAMFERED 3/4" WITH THE FOLLOWING EXCEPTIONS: TOP CORNERS OF CURBS MAY BE ROUNDED TO 1-1/2" RADIUS WHICH IS BUILT INTO CURB FORMS; CORNERS OF TRANSVERSE FLOOR EXPANSION JOINTS SHALL BE ROUNDED WITH A 1/4" FINISHING TOOL UNLESS OTHERWISE REQUIRED ON PLANS; AND CORNERS OF EXPANSION JOINTS IN THE ROADWAY FACES AND TOPS OF CURBS AND SIDEWALKS SHALL BE ROUNDED TO A 1/4" RADIUS WITH A FINISHING STONE OR TOOL UNLESS OTHERWISE REQUIRED ON PLANS.

DOWELS:

DOWELS WHEN INDICATED ON PLANS AS FOR CULVERT EXTENSIONS, SHALL BE EMBEDDED AT LEAST 12" INTO THE OLD CONCRETE AND GROUTED INTO PLACE WITH 1:2 CEMENT MORTAR.

ALLOWANCE FOR DEAD LOAD DEFLECTION, SETTLEMENT, ETC. IN CASTING SUPERSTRUCTURES:

BRIDGES SHALL BE BUILT ON THE GRADE OR VERTICAL CURVE SHOWN ON PLANS. SLABS, CURBS AND PARAPETS SHALL CONFORM TO THE GRADE OR CURVE.

ALL DIMENSIONS WHICH ARE GIVEN IN SECTION AND ARE AFFECTED BY DEAD LOAD DEFLECTIONS ARE DIMENSIONS AT CENTER LINE OF BEARING UNLESS OTHERWISE NOTED ON PLANS. IN SETTING FORMS FOR STEEL BEAM BRIDGES AND PRESTRESSED CONCRETE GIRDER BRIDGES, ADJUSTMENTS SHALL BE MADE DUE TO THE DEAD LOAD DEFLECTIONS FOR THE ELEVATIONS SHOWN. WHERE BLOCKS ARE SHOWN OVER BEAMS FOR BUILDING UP TO THE SLAB, THE VERTICAL DIMENSIONS OF THE BLOCKS SHALL BE ADJUSTED BETWEEN BEARINGS TO COMPENSATE FOR DEAD LOAD DEFLECTIONS, VERTICAL CURVE ORDINATE, AND ACTUAL BEAM CAMBER. WHERE BOTTOM OF SLAB IS IN LINE WITH BOTTOM OF TOP FLANGES, DEPTH OF SLAB BETWEEN BEARINGS SHALL BE ADJUSTED TO COMPENSATE FOR DEAD LOAD DEFLECTION, VERTICAL CURVE ORDINATE, AND ACTUAL BEAM CAMBER.

IN SETTING FALSEWORK AND FORMS FOR REINFORCED CONCRETE SPANS, AN ALLOWANCE SHALL BE MADE FOR DEAD LOAD DEFLECTIONS, SETTLEMENT OF FALSEWORK, AND PERMANENT CAMBER WHICH SHALL BE PROVIDED FOR IN ADDITION TO THE ELEVATIONS SHOWN. AFTER REMOVAL OF THE FALSEWORK, THE FINISHED STRUCTURES SHALL CONFORM TO THE PROFILE AND ELEVATIONS SHOWN ON THE PLANS AND CONSTRUCTION ELEVATIONS FURNISHED BY THE ENGINEER.

DETAILED DRAWINGS FOR FALSEWORK OR FORMS FOR BRIDGE SUPERSTRUCTURE AND ANY STRUCTURE OR PARTS OF A STRUCTURE AS NOTED ON THE PLANS SHALL BE SUBMITTED TO THE ENGINEER FOR APPROVAL BEFORE CONSTRUCTION OF THE FALSEWORK OR FORMS IS STARTED.

REINFORCING STEEL:

ALL REINFORCING STEEL SHALL BE DEFORMED. DIMENSIONS RELATIVE TO PLACEMENT OF REINFORCING ARE TO CENTERS OF BARS UNLESS OTHERWISE INDICATED IN THE PLANS. DIMENSIONS ON BAR DETAILS ARE TO CENTERS OF BARS OR ARE OUT TO OUT AS INDICATED ON PLANS.

WIRE BAR SUPPORTS SHALL BE PROVIDED FOR REINFORCING STEEL WHERE INDICATED ON THE PLANS. WHEN BAR SUPPORT PIECES ARE PLACED IN CONTINUOUS LINES, THEY SHALL BE SO PLACED THAT THE ENDS OF THE SUPPORTING WIRES SHALL BE LAPPED TO LOCK LEGS ON ADJOINING PIECES.

STRUCTURAL STEEL:

AT THE CONTRACTOR'S OPTION, HE MAY SUBSTITUTE 7/8" Ø SHEAR STUDS FOR THE 3/4" Ø STUDS SPECIFIED ON THE PLANS. THIS SUBSTITUTION SHALL BE MADE AT THE RATE OF 3 - 7/8" Ø STUDS FOR 4 - 3/4" Ø STUDS, AND STUD SPACING CHANGES SHALL BE MADE AS NECESSARY TO PROVIDE THE SAME EQUIVALENT NUMBER OF 7/8" Ø STUDS ALONG THE BEAM AS SHOWN FOR 3/4" Ø STUDS BASED ON THE RATIO OF 3 - 7/8" Ø STUDS FOR 4 - 3/4" Ø STUDS. STUDS OF THE LENGTH SPECIFIED ON THE PLANS MUST BE PROVIDED. THE MAXIMUM SPACING SHALL BE 2'-0".

EXCEPT AT THE INTERIOR SUPPORTS OF CONTINUOUS BEAMS WHERE THE COVER PLATE IS IN CONTACT WITH BEARING PLATE, THE CONTRACTOR MAY, AT HIS OPTION, SUBSTITUTE FOR THE COVER PLATES DESIGNATED ON THE PLANS COVER PLATES OF THE EQUIVALENT AREA PROVIDED THESE PLATES ARE AT LEAST 5/16" IN THICKNESS AND DO NOT EXCEED A WIDTH EQUAL TO THE FLANGE WIDTH LESS 2" OR A THICKNESS EQUAL TO 2 TIMES THE FLANGE THICKNESS. THE SIZE OF FILLET WELDS SHALL CONFORM TO THE REQUIREMENTS OF THE CURRENT ANSI/AASHTO/AWS "BRIDGE WELDING CODE". ELECTROSLAG WELDING WILL NOT BE PERMITTED.

WITH THE SOLE EXCEPTION OF EDGES AT SURFACES WHICH BEAR ON OTHER SURFACES, ALL SHARP EDGES AND ENDS OF SHAPES AND PLATES SHALL BE SLIGHTLY ROUNDED BY SUITABLE MEANS TO A RADIUS OF APPROXIMATELY 1/16 INCH OR EQUIVALENT FLAT SURFACE AT A SUITABLE ANGLE PRIOR TO PAINTING, GALVANIZING, OR METALLIZING.

HANDRAILS AND POSTS:

METAL STANDARDS AND FACES OF THE CONCRETE END POSTS FOR THE METAL RAIL SHALL BE SET NORMAL TO THE GRADE OF THE CURB, UNLESS OTHERWISE SHOWN ON PLANS. THE METAL RAIL AND TOPS OF CONCRETE POSTS USED WITH THE ALUMINUM RAIL SHALL BE BUILT PARALLEL TO THE GRADE OF THE CURB.

METAL HANDRAILS SHALL BE IN ACCORDANCE WITH THE PLANS. RAILS SHALL BE AS MANUFACTURED FOR BRIDGE RAILING. CASTINGS SHALL BE OF A UNIFORM APPEARANCE. FINS AND OTHER DEFORMATIONS RESULTING FROM CASTING OR OTHERWISE SHALL BE REMOVED IN A MANNER SO THAT A UNIFORM COLORING OF THE COMPLETED CASTING SHALL BE OBTAINED. CASTINGS WITH DISCOLORATIONS OR OF NON-UNIFORM COLORING WILL NOT BE ACCEPTED. CERTIFIED MILL REPORTS ARE REQUIRED FOR METAL RAILS AND POSTS.

SPECIAL NOTES:

GENERALLY, IN CASE OF DISCREPANCY, THIS STANDARD SHEET OF NOTES SHALL GOVERN OVER THE SPECIFICATIONS, BUT THE REMAINDER OF THE PLANS SHALL GOVERN OVER NOTES HEREON, AND SPECIAL PROVISIONS SHALL GOVERN OVER ALL. SEE SPECIFICATIONS ARTICLE 105-4.

ENGLISH

JANUARY, 1990