This electronic collection of documents is provided for the convenience of the user and is Not a Certified Document –

The documents contained herein were originally issued and sealed by the individuals whose names and license numbers appear on each page, on the dates appearing with their signature on that page.
This file or an individual page shall not be considered a certified document.

DocuSign Envelope ID: CA3F1E19-F83A-477E-9D12-BF2D91EC2940

PROJECT: 17BP.14.R.5

CONTRACT: DN00139

FINAL PLANS

See Sheet 1-A For Index of Sheets
See Sheet 1-B For Conventional Symbols

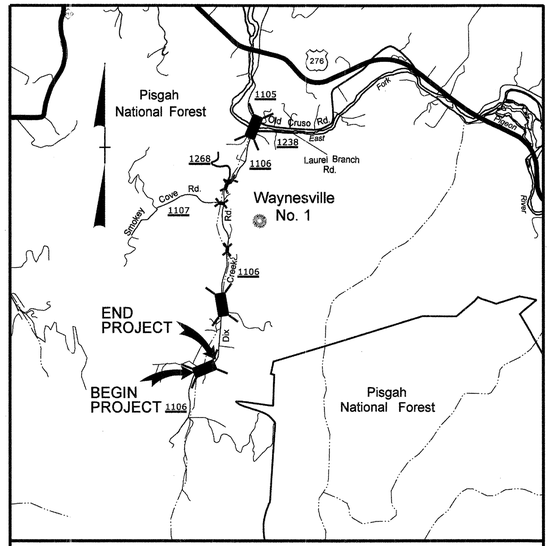

VICINITY MAP NTS

STATE OF NORTH CAROLINA
DIVISION OF HIGHWAYS

HAYWOOD COUNTY

STATE	STATE PROJECT REFERENCE NO.	SHEET NO.	TOTAL SHEETS
N.C.	17BP.14.R.5	1	

STATE PROJ. NO.	F. A. PROJ. NO.	DESCRIPTION
17BP.14.R.5		PE
17BP.14.R.5		RW & UTILITIES
17BP.14.R.5		CONST

LOCATION: BRIDGE NO. 350 ON SR 1106 OVER DIX CREEK

TYPE OF WORK: GRADING, PAVING, DRAINAGE, SIGNING, AND STRUCTURE

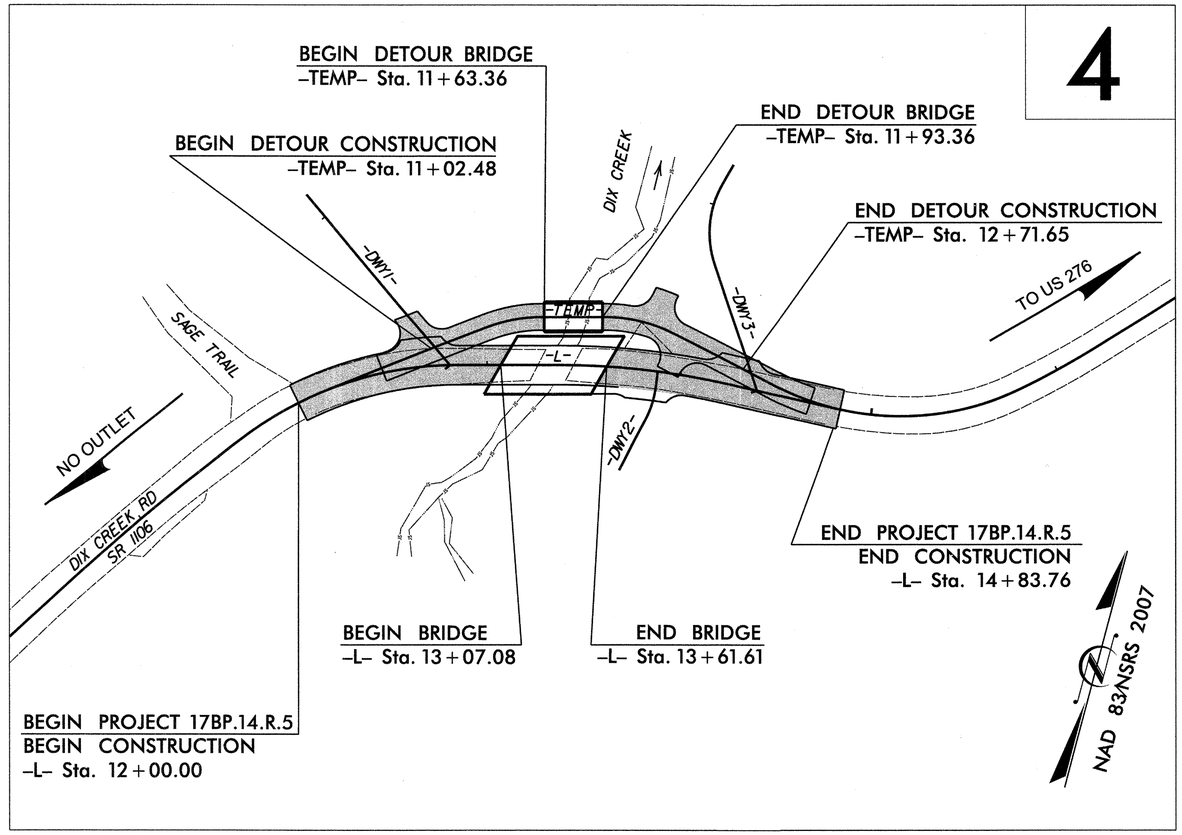

NCDOT CONTACT:
JOSH DEYTON, PE
HIGHWAY DIVISION 14
BRIDGE MANAGER

GRAPHIC SCALES

20 10 0 20 40
PLANS

20 10 0 20 40
PROFILE (HORIZONTAL)

4 2 0 4 8
PROFILE (VERTICAL)

DESIGN DATA

ADT 2007 = 520
ADT =
DHV = %
D = %
T = % *
V = 35 MPH
* TTST = DUAL
FUNC CLASS = LOCAL

SUBREGIONAL TIER

PROJECT LENGTH

LENGTH ROADWAY PROJECT	=	0.044 MILES
LENGTH STRUCTURES PROJECT	=	0.010 MILES
TOTAL LENGTH PROJECT	=	0.054 MILES

Prepared In the Office of:
THE LOUIS BERGER GROUP, Inc.
1001 Wade Avenue, Suite 400
Raleigh, North Carolina 27605
License No.: F-0840

2012 STANDARD SPECIFICATIONS

RIGHT OF WAY DATE:

LETTING DATE:

DEAN D. HATFIELD, PE
PROJECT ENGINEER

WILLIAM E. TILLITT, PE
PROJECT DESIGN ENGINEER

HYDRAULICS ENGINEER

NORTH CAROLINA PROFESSIONAL SEAL 032134 ENGINEER WALTER ROBERTS

DocuSigned by: Walter Roberts
P.E. 8/3/2015
SIGNATURE:

ROADWAY DESIGN ENGINEER

NORTH CAROLINA PROFESSIONAL SEAL 16003 ENGINEER DEAN D. HATFIELD

DocuSigned by: Dean D. Hatfield
P.E. 8/3/2015
SIGNATURE:

DIVISION OF HIGHWAYS
STATE OF NORTH CAROLINA

DEPARTMENT OF TRANSPORTATION

P.E.
STATE HIGHWAY DESIGN ENGINEER

8/3/2015 11:17:07 AM
G:\OR Projects\OR1100 - NCDOT Group W\430350\Roadway\Proj\430350_RDY_00_TSH.dgn
G:\CADD\Plot\OR1100\1100_rdy.tbl

DocuSign Envelope ID: C3190D69-7CFD-43CD-B06C-8E864EC94E22

PROJECT REFERENCE NO.	SHEET NO.
17BPJ4.R.5	1-A

ROADWAY DESIGN ENGINEER

NORTH CAROLINA PROFESSIONAL SEAL 16003 ENGINEER Brian T. Mayfield

8/3/2015

STATE OF NORTH CAROLINA
DIVISION OF HIGHWAYS

INDEX OF SHEETS

INDEX OF SHEETS

SHEET NUMBER	SHEET
1	TITLE SHEET
1-A	INDEX OF SHEETS, GENERAL NOTES, AND LIST OF STANDARD DRAWINGS
1-B	CONVENTIONAL SYMBOLS
1-C	SURVEY CONTROL
2 THRU 2-A	PAVEMENT SCHEDULE, TYPICAL SECTIONS, AND WEDGING DETAILS
2-B THRU 2-C	DETOUR SHEETS
3-A	SUMMARIES OF EARTHWORK, GUARDRAIL, PAVEMENT REMOVAL & SUMMARY OF DRAINAGE QUANTITIES
4	PLAN SHEET
5	PROFILE SHEET
TMP-1 THRU TMP-6	TRAFFIC MANAGEMENT PLANS
PMP-1 THRU PMP-2	PAVEMENT MARKING PLANS
EC-1 THRU EC-4	EROSION CONTROL PLANS
UO-1 THRU UO-2	UTLITIES BY OTHERS PLANS
X-1 THRU X-17	CROSS-SECTIONS
S-1 THRU S-21	STRUCTURE PLANS

GENERAL NOTES

GENERAL NOTES: 2012 SPECIFICATIONS
EFFECTIVE: 01-17-12
REVISED: 11/01/11

GRADING AND SURFACING OR RESURFACING AND WIDENING:

THE GRADE LINES SHOWN DENOTE THE FINISHED ELEVATION OF THE PROPOSED SURFACING AT GRADE POINTS SHOWN ON THE TYPICAL SECTIONS. WHERE NO GRADE LINES ARE SHOWN, THE PROFILES SHOWN DENOTE THE TOP ELEVATION OF THE EXISTING PAVEMENT ALONG THE CENTER LINE OF SURVEY ON WHICH THE PROPOSED RESURFACING WILL BE PLACED. GRADE LINES MAY BE ADJUSTED BY THE ENGINEER IN ORDER TO SECURE A PROPER TIE-IN.

CLEARING:

CLEARING ON THIS PROJECT SHALL BE PERFORMED TO THE LIMITS ESTABLISHED BY METHOD III.

SUPERELEVATION:

ALL CURVES ON THIS PROJECT SHALL BE SUPERELEVATED IN ACCORDANCE WITH STD. NO. 225.04 USING THE RATE OF SUPERELEVATION AND RUNOFF SHOWN ON THE PLANS. SUPERELEVATION IS TO BE REVOLVED ABOUT THE GRADE POINTS SHOWN ON THE TYPICAL SECTIONS.

SHOULDER CONSTRUCTION:

ASPHALT, EARTH, AND CONCRETE SHOULDER CONSTRUCTION ON THE HIGH SIDE OF SUPERELEVATED CURVES SHALL BE IN ACCORDANCE WITH STD. NO. 560.01.

GUARDRAIL:

THE GUARDRAIL LOCATIONS SHOWN ON THE PLANS MAY BE ADJUSTED DURING CONSTRUCTION AS DIRECTED BY THE ENGINEER. THE CONTRACTOR SHOULD CONSULT WITH THE ENGINEER PRIOR TO ORDERING GUARDRAIL MATERIAL.

TEMPORARY SHORING:

SHORING REQUIRED FOR THE MAINTENANCE OF TRAFFIC NOT SHOWN ON THE PLANS WILL BE PAID FOR AT THE CONTRACT PRICE FOR "TEMPORARY SHORING".

END BENTS:

THE ENGINEER SHALL CHECK THE STRUCTURE END BENT PLANS, DETAILS, AND CROSS-SECTION PRIOR TO SETTING OF THE SLOPE STAKES FOR THE EMBANKMENT OR EXCAVATION APPROACHING A BRIDGE.

UTILITIES:

UTILITY OWNERS ON THIS PROJECT ARE

HAYWOOD EMC & AT&T

ANY RELOCATION OF EXISTING UTILITIES WILL BE ACCOMPLISHED BY OTHERS.

RIGHT-OF-WAY MARKERS:

ALL RIGHT-OF-WAY MARKERS ON THIS PROJECT SHALL BE PLACED BY CONTRACT IN ACCORDANCE WITH SECTION 801 OF THE 2012 NORTH CAROLINA STANDARD SPECIFICATIONS FOR ROADS AND STRUCTURES.

ROADWAY ENGLISH STANDARD DRAWINGS

2012 ROADWAY ENGLISH STANDARD DRAWINGS

The following Roadway Standards as appear in "Roadway Standard Drawings" Highway Design Branch - N. C. Department of Transportation - Raleigh, N. C., Dated January, 2012 are applicable to this project and by reference hereby are considered a part of these plans:

STD.NO.	TITLE
DIVISION 2 - EARTHWORK	
200.03	Method of Clearing - Method III
225.04	Method of Obtaining Superelevation - Two Lane Pavement
DIVISION 3 - PIPE CULVERTS	
300.01	Method of Pipe Installation
310.10	Driveway Pipe Construction
DIVISION 5 - SUBGRADE, BASES AND SHOULDERS	
560.01	Method of Shoulder Construction - High Side of Superelevated Curve - Method I
DIVISION 6 - ASPHALT BASES AND PAVEMENTS	
654.01	Pavement Repairs
DIVISION 8 - INCIDENTALS	
862.01	Guardrail Placement
862.02	Guardrail Installation
862.03	Structure Anchor Units
876.01	Rip Rap in Channels
876.02	Guide for Rip Rap at Pipe Outlets
876.04	Drainage Ditches with Class 'B' Rip Rap

8/3/2015 11:17:08 AM
G:\DR Projects\DR1100 - NCDOT Group W\430350\Roadway\Proj\430350_RDY_01_1A.dgn
G:\CADD\Plot\DR1100\1100_rdy.tbl

04/16/11

PROJECT REFERENCE NO.	SHEET NO.
17BPJ4R.5	1B

Note: Not to Scale

****S.U.E. = Subsurface Utility Engineering***

STATE OF NORTH CAROLINA
DIVISION OF HIGHWAYS

CONVENTIONAL PLAN SHEET SYMBOLS

BOUNDARIES AND PROPERTY:

- State Line
- County Line
- Township Line
- City Line
- Reservation Line
- Property Line
- Existing Iron Pin — EIP
- Property Corner
- Property Monument — ECM
- Parcel/Sequence Number — 123
- Existing Fence Line
- Proposed Woven Wire Fence
- Proposed Chain Link Fence
- Proposed Barbed Wire Fence
- Existing Wetland Boundary — WLB
- Proposed Wetland Boundary — WLB
- Existing Endangered Animal Boundary — EAB
- Existing Endangered Plant Boundary — EPB
- Known Soil Contamination: Area or Site
- Potential Soil Contamination: Area or Site

BUILDINGS AND OTHER CULTURE:

- Gas Pump Vent or U/G Tank Cap
- Sign — S
- Well — W
- Small Mine
- Foundation
- Area Outline
- Cemetery
- Building
- School
- Church
- Dam

HYDROLOGY:

- Stream or Body of Water
- Hydro, Pool or Reservoir
- Jurisdictional Stream — JS
- Buffer Zone 1 — BZ 1
- Buffer Zone 2 — BZ 2
- Flow Arrow
- Disappearing Stream
- Spring
- Wetland
- Proposed Lateral, Tail, Head Ditch — FLOW
- False Sump

RAILROADS:

- Standard Gauge — CSX TRANSPORTATION
- RR Signal Milepost — MILEPOST 35
- Switch — SWITCH
- RR Abandoned
- RR Dismantled

RIGHT OF WAY:

- Baseline Control Point
- Existing Right of Way Marker
- Existing Right of Way Line
- Proposed Right of Way Line
- Proposed Right of Way Line with Iron Pin and Cap Marker
- Proposed Right of Way Line with Concrete or Granite Marker
- Existing Control of Access — A
- Proposed Control of Access — A
- Existing Easement Line — E
- Proposed Temporary Construction Easement — E
- Proposed Temporary Drainage Easement — TDE
- Proposed Permanent Drainage Easement — PDE
- Proposed Permanent Drainage / Utility Easement — DUE
- Proposed Permanent Utility Easement — PUE
- Proposed Temporary Utility Easement — TUE
- Proposed Aerial Utility Easement — AUE
- Proposed Permanent Easement with Iron Pin and Cap Marker

ROADS AND RELATED FEATURES:

- Existing Edge of Pavement
- Existing Curb
- Proposed Slope Stakes Cut — C
- Proposed Slope Stakes Fill — F
- Proposed Curb Ramp — CR
- Existing Metal Guardrail
- Proposed Guardrail
- Existing Cable Guiderail
- Proposed Cable Guiderail
- Equality Symbol
- Pavement Removal

VEGETATION:

- Single Tree
- Single Shrub
- Hedge
- Woods Line
- Orchard
- Vineyard — Vineyard

EXISTING STRUCTURES:

MAJOR:

- Bridge, Tunnel or Box Culvert — CONC
- Bridge Wing Wall, Head Wall and End Wall — CONC WW

MINOR:

- Head and End Wall — CONC HW
- Pipe Culvert
- Footbridge
- Drainage Box: Catch Basin, DI or JB — CB
- Paved Ditch Gutter
- Storm Sewer Manhole — S
- Storm Sewer — S

UTILITIES:

POWER:

- Existing Power Pole
- Proposed Power Pole
- Existing Joint Use Pole
- Proposed Joint Use Pole
- Power Manhole — P
- Power Line Tower
- Power Transformer
- U/G Power Cable Hand Hole
- H-Frame Pole
- Recorded U/G Power Line — P
- Designated U/G Power Line (S.U.E.*) — P

TELEPHONE:

- Existing Telephone Pole
- Proposed Telephone Pole
- Telephone Manhole — T
- Telephone Booth
- Telephone Pedestal — T
- Telephone Cell Tower
- U/G Telephone Cable Hand Hole — HH
- Recorded U/G Telephone Cable — T
- Designated U/G Telephone Cable (S.U.E.*) — T
- Recorded U/G Telephone Conduit — TC
- Designated U/G Telephone Conduit (S.U.E.*) — TC
- Recorded U/G Fiber Optics Cable — T FO
- Designated U/G Fiber Optics Cable (S.U.E.*) — T FO

WATER:

- Water Manhole — W
- Water Meter
- Water Valve
- Water Hydrant
- Recorded U/G Water Line — W
- Designated U/G Water Line (S.U.E.*) — W
- Above Ground Water Line — A/G Water

TV:

- TV Satellite Dish
- TV Pedestal — C
- TV Tower
- U/G TV Cable Hand Hole — HH
- Recorded U/G TV Cable — TV
- Designated U/G TV Cable (S.U.E.*) — TV
- Recorded U/G Fiber Optic Cable — TV FO
- Designated U/G Fiber Optic Cable (S.U.E.*) — TV FO

GAS:

- Gas Valve
- Gas Meter
- Recorded U/G Gas Line — G
- Designated U/G Gas Line (S.U.E.*) — G
- Above Ground Gas Line — A/G Gas

SANITARY SEWER:

- Sanitary Sewer Manhole
- Sanitary Sewer Cleanout
- U/G Sanitary Sewer Line — SS
- Above Ground Sanitary Sewer — A/G Sanitary Sewer
- Recorded SS Forced Main Line — FSS
- Designated SS Forced Main Line (S.U.E.*) — FSS

MISCELLANEOUS:

- Utility Pole
- Utility Pole with Base
- Utility Located Object
- Utility Traffic Signal Box — S
- Utility Unknown U/G Line — ?UTL
- U/G Tank; Water, Gas, Oil
- Underground Storage Tank, Approx. Loc. — UST
- A/G Tank; Water, Gas, Oil
- Geoenvironmental Boring
- U/G Test Hole (S.U.E.*)
- Abandoned According to Utility Records — AATUR
- End of Information — E.O.I.

8/3/2015 11:17:08 AM
G:\DR Projects\DR1100 - NCDOT Group W\430350\Roadway\Proj\430350_RDY_01_1B.dgn
G:\CADD\Plot\DR1100\1100_rdy.tbl

6/2/99

PROJECT REFERENCE NO.	SHEET NO.
17BP.14.R.5	1-C
Location and Surveys	

SURVEY CONTROL SHEET 43-0350
-FINAL-

-FINAL- PUE MARKER IRON PIN AND CAP-E

ALIGN	STATION	OFFSET	NORTH	EAST
L	13+74.94	-30.00	636973.1304	846539.0020
L	14+13.97	-149.45	637097.2231	846572.4864
L	14+48.23	-137.21	637086.8025	846611.1043
L	14+15.01	-30.00	636978.1286	846581.7812
L	13+92.59	30.00	636916.3110	846565.1012
L	13+80.00	57.00	636888.0280	846557.7150
L	13+00.00	30.00	636896.9140	846478.9627

FINAL -L-

TYPE	STATION	NORTH	EAST
POT	10+00.00	636721.1977	846264.6047
PC	10+57.76	636769.8395	846295.7617
PCC	11+71.33	636861.5872	846362.5703
PT	12+84.50	636921.8712	846456.2173
PC	13+36.93	636935.4612	846506.8547
PT	14+24.30	636948.6980	846593.0392
PC	14+83.76	636951.2296	846652.4404
PCC	15+79.07	636985.3828	846739.5636
PT	16+26.63	637018.4017	846773.7534
POT	16+74.80	637053.9944	846806.2166

****
BM1 ELEVATION = 3233.73
N 636903 E 846512
L STATION 13+33.00 33 RIGHT
RR SPK IN 24" LOCUST
****

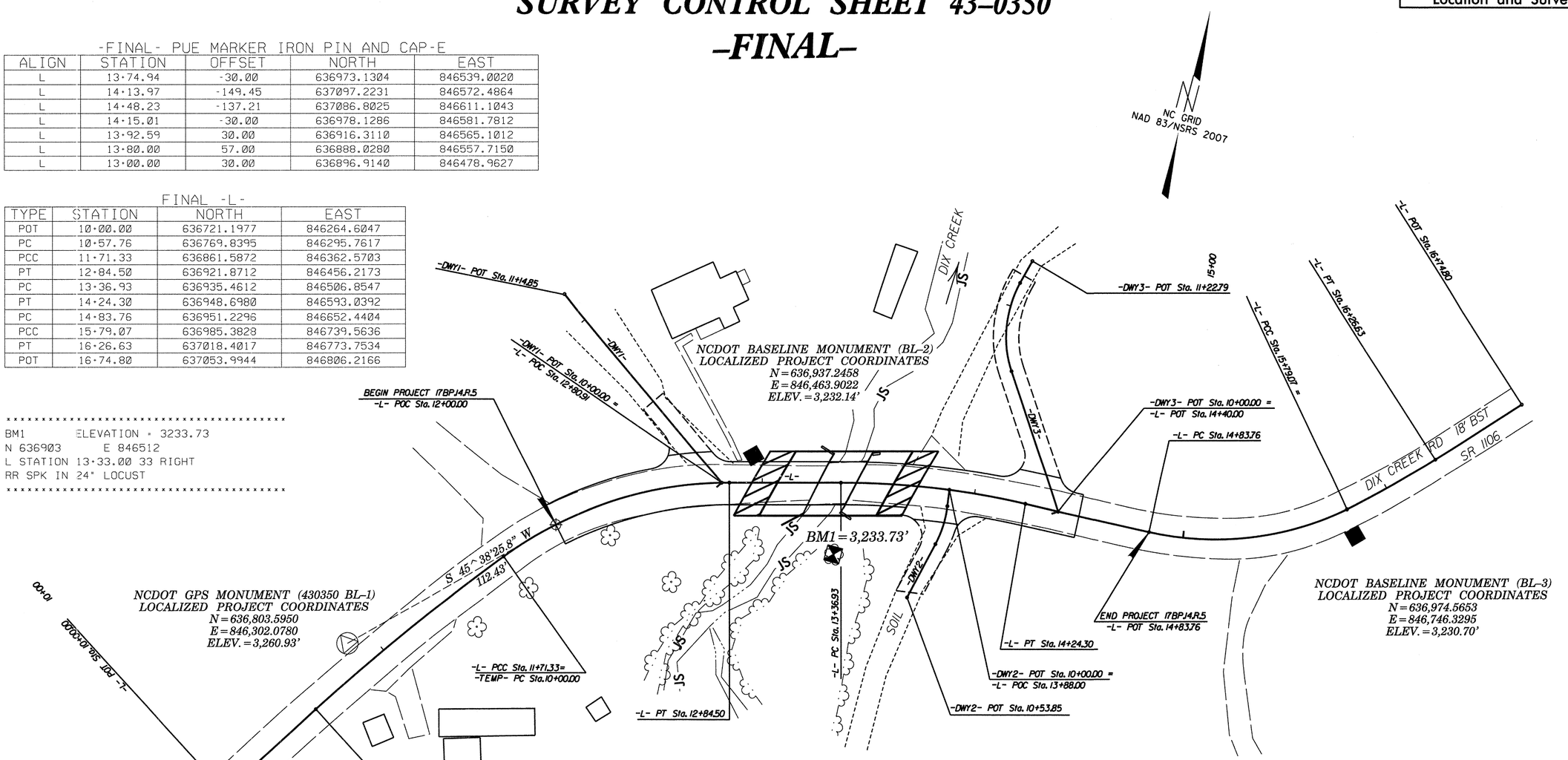

DATUM DESCRIPTION

THE LOCALIZED COORDINATE SYSTEM DEVELOPED FOR THIS PROJECT IS BASED ON THE STATE PLANE COORDINATES ESTABLISHED BY NCDOT FOR MONUMENT "43-0350 (BL-1)" WITH NAD 83/NSRS 2007 STATE PLANE GRID COORDINATES OF NORTHING: 636803.5950(ft) EASTING: 846302.0780(ft) ELEVATION: 3260.93(ft) THE AVERAGE COMBINED GRID FACTOR USED ON THIS PROJECT (GROUND TO GRID) IS: 0.999727095 THE N.C. LAMBERT GRID BEARING AND LOCALIZED HORIZONTAL GROUND DISTANCE FROM "43-0350 (BL-1)" TO -L- STATION 12+00.00 IS S 45°38'25.8" W 112.43' ALL LINEAR DIMENSIONS ARE LOCALIZED HORIZONTAL DISTANCES VERTICAL DATUM USED IS NAVD 88

GEOID MODEL – G09NC
NOTE: DRAWING NOT TO SCALE

NOTES:

1. *THE CONTROL DATA FOR THIS PROJECT CAN BE FOUND ELECTRONICALLY BY SELECTING PROJECT CONTROL DATA AT: HTTPS://CONNECT.NCDOT.GOV/RESOURCES/LOCATION/*

   THE FILES TO BE FOUND ARE AS FOLLOWS: 43-0350_LS_CONTROL.TXT

   SITE CALIBRATION INFORMATION HAS NOT BEEN PROVIDED FOR THIS PROJECT. IF FURTHER INFORMATION IS NEEDED, PLEASE CONTACT THE LOCATION AND SURVEYS UNIT.

△ *INDICATES GEODETIC CONTROL MONUMENTS USED OR SET FOR HORIZONTAL PROJECT CONTROL BY THE NCDOT LOCATION AND SURVEYS UNIT.*
PROJECT CONTROL ESTABLISHED USING GLOBAL POSITIONING SYSTEM.

8/3/2015 11:17:09 AM
G:\OR Projects\OR1100 - NCDOT Group W\430350\Roadway\Proj\430350_RDY_01-1s_1c.dgn
G:\CADD\Plot\OR1100\1100_rdy.tbl

DocuSign Envelope ID: 6DEDDAB7-60D4-4842-9592-2CD3BBF6512E

N.T.S	PROJECT REFERENCE NO.	SHEET NO.
	17BP.14.R.5	2
	R/W SHEET NO.	
	ROADWAY DESIGN ENGINEER	PAVEMENT DESIGN ENGINEER

NORTH CAROLINA PROFESSIONAL SEAL 16003 ENGINEER Docusigned by: Wade D. Hall DocuSigned by: 8/3/2015

REGISTERED ENGINEER

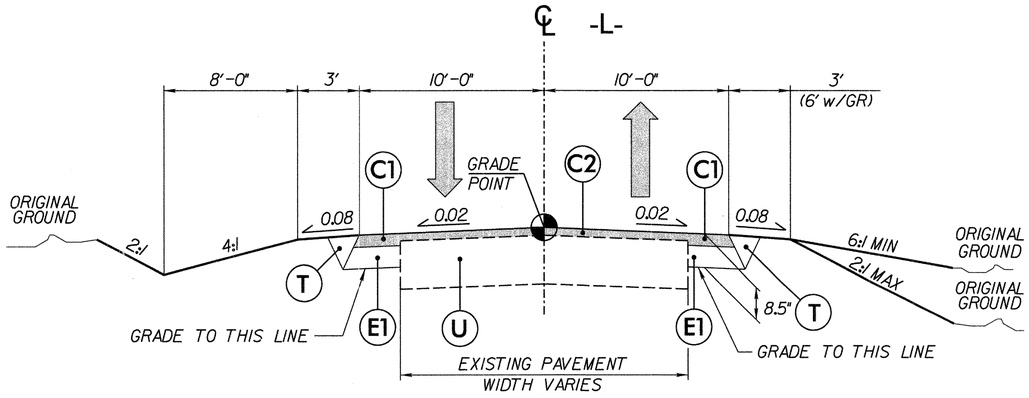

TYPICAL SECTION No. 1

–L– STA 12+00.00 TO –L– STA 13+07.08 (BEGIN BRIDGE)
–L– STA 13+61.61 (END BRIDGE) TO –L– STA 14+83.76

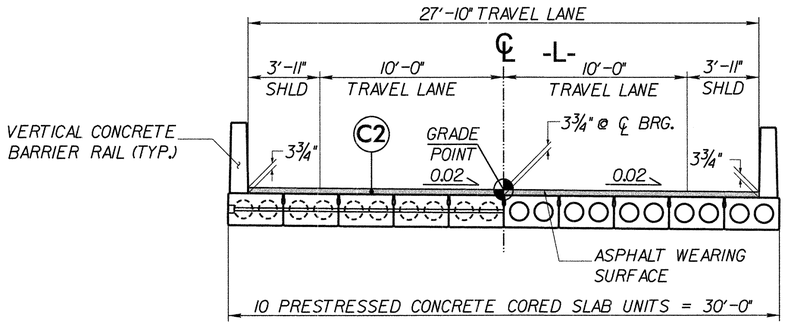

TYPICAL SECTION No. 2

(ON STRUCTURE)

–L– STA 13+07.08 (BEGIN BRIDGE) TO –L– STA 13+61.61 (END BRIDGE)

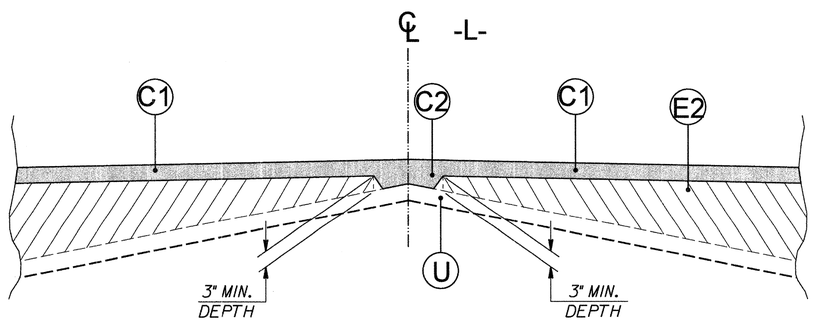

DETAIL SHOWING METHOD OF WEDGING

-DWY1-, -DWY1TEMP-
-DWY2-, DWY2TEMP-
-DWY3-, DWY3TEMP-

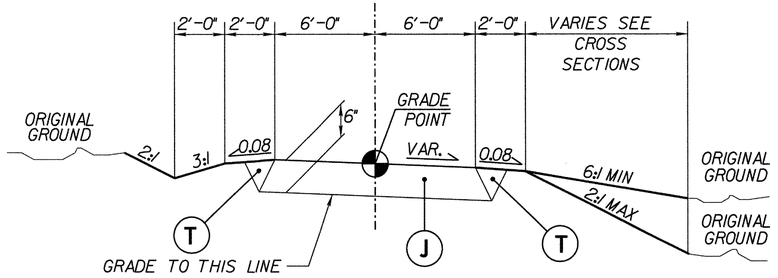

TYPICAL SECTION No. 3

–DWY1– STA 10+12.63 TO –DWY1– STA 10+70.00
–DWY1TEMP– STA 10+19.43 TO –DWY1TEMP– STA 10+70.00
–DWY2– STA 10+10.00 TO –DWY2– STA 10+50.00
–DWY2TEMP– STA 10+07.00 TO –DWY2TEMP– STA 10+70.00
–DWY3– STA 10+11.66 TO –DWY3– STA 11+15.00
–DWY3TEMP– STA 10+19.21 TO –DWY3TEMP– STA 11+15.00

Note: Pavement edge slopes are 1:1 unless shown otherwise.

PAVEMENT SCHEDULE	
ITEM	DESCRIPTION
C	Prop. Approx 1.5" Asphalt Concrete Surface Course, Type SF9.5A, at an Average Rate of 110 lbs. Per sq. yard.
C1	Prop. Approx 3.0" Asphalt Concrete Surface Course, Type SF9.5A, at an Average Rate of 165 lbs. Per sq. yard in each of two layers.
C2	Prop. Var. Depth Asphalt Concrete Surface Course, Type SF9.5A, at an Average Rate of 110 lbs. Per sq. yard Per 1" Depth, to be placed in layers not less than 1" or greater than 1.5" in depth.
E1	Prop. Approx 5.5" Asphalt Concrete Base Course, Type B25.0B, at an Average Rate of 627 lbs. Per sq. yard.
E2	Prop. Var. Depth Asphalt Concrete Base Course, Type B25.0B, at an Average Rate of 114 lbs. Per sq. yard Per 1" Depth, to be placed in layers not less than 4" or greater than 5.5" in depth.
J	Prop. 6" Aggregate Base Course.
T	Earth Material
U	Existing Pavement
W	Var. Depth Asphalt Pavement

REVISIONS

8/3/2015 12:30:46 PM
G:\DR Projects\DR1100 - NCDOT Group VI\430350_Roadway\Proj\430350_RDY_02_TYP.dgn
G:\CADD\Plots\DR1100\1100_rdy_tb1

DocuSign Envelope ID: 9946C7A3-0743-4FBA-A6EA-619485B339FC

PROJECT REFERENCE NO.	SHEET NO.
17BP.14.R.5	2-A
R/W SHEET NO.	
ROADWAY DESIGN ENGINEER	PAVEMENT DESIGN ENGINEER
NORTH CAROLINA PROFESSIONAL SEAL 16003 ENGINEER DEAN D. HAIRFIELD REGISTERED ENGINEER 8/3/2015	

N.T.S

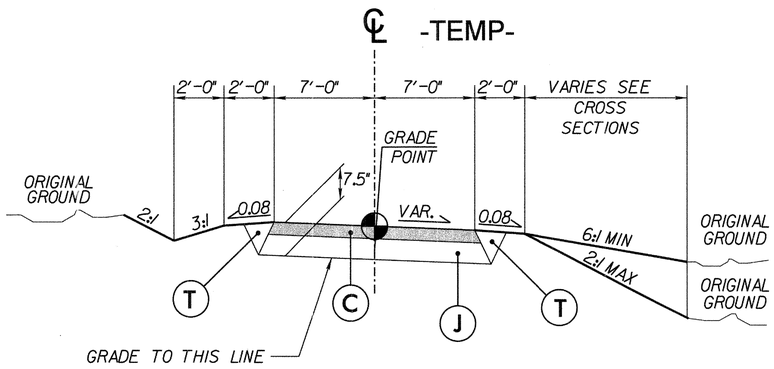

TYPICAL SECTION No. 5

-TEMP- STA 11+02.48 TO -TEMP- STA 11+63.36 (BEGIN BRIDGE)
-TEMP- STA 11+93.36 (END BRIDGE) TO -TEMP- STA 12+71.65

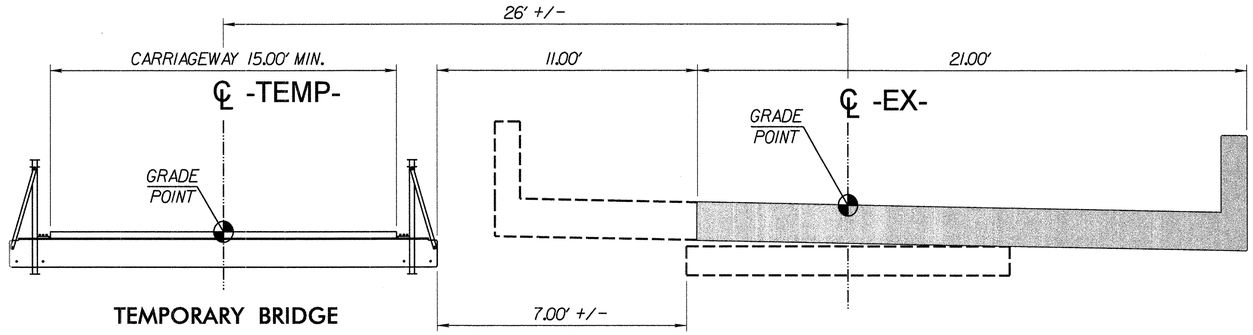

TEMPORARY BRIDGE

TYPICAL SECTION No. 6

PHASE 1
-TEMP- STA 11+63.36 TO -TEMP- STA 11+93.36
-L- STA 13+07.08 TO STA 13+61.61

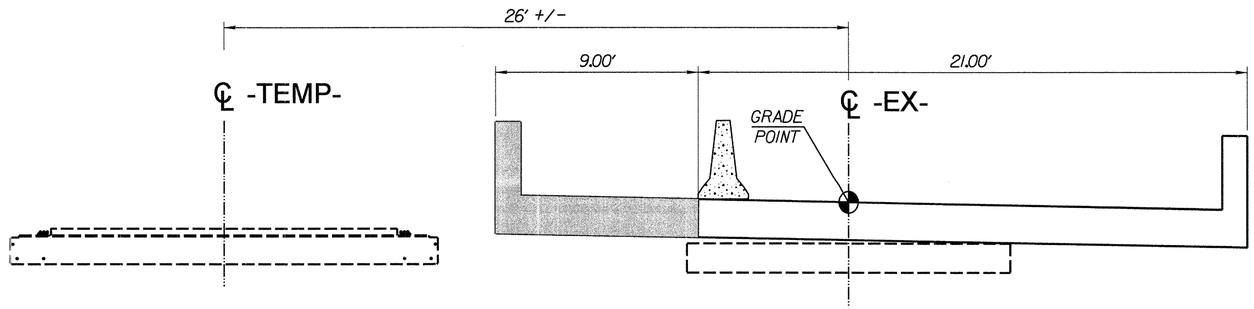

TYPICAL SECTION No. 7

PHASE 2
-TEMP- STA 11+63.36 TO -TEMP- STA 11+93.36
-L- STA 13+07.08 TO STA 13+61.61

Note: Pavement edge slopes are 1:1 unless shown otherwise.

PAVEMENT SCHEDULE	
ITEM	DESCRIPTION
C	Prop. Approx 1.5" Asphalt Concrete Surface Course, Type S9.5B, at an Average Rate of 112 lbs. Per sq. yard.
C1	Prop. Approx 3.0" Asphalt Concrete Surface Course, Type S9.5B, at an Average Rate of 168 lbs. Per sq. yard in each of two layers.
C2	Prop. Var. Depth Asphalt Concrete Surface Course, Type S9.5B, at an Average Rate of 112 lbs. Per sq. yard Per 1" Depth, to be placed in layers not less than 1.5" or greater than 2" in depth.
E1	Prop. Approx 5.5" Asphalt Concrete Base Course, Type B25.0B, at an Average Rate of 627 lbs. Per sq. yard.
E2	Prop. Var. Depth Asphalt Concrete Base Course, Type B25.0B, at an Average Rate of 114 lbs. Per sq. yard Per 1" Depth, to be placed in layers not less than 4" or greater than 5.5" in depth.
J	Prop. 6" Aggregate Base Course.
T	Earth Material
U	Existing Pavement
W	Var. Depth Asphalt Pavement

REVISIONS

8/3/2015 12:32:39 PM
G:\OR Projects\OR1100 - NCDOT Group W\430350\Roadway\Proj\430350_RDY_02A_TYP.dgn
G:\CADD\Plot\OR1100\1100_rdy.tbl

DocuSign Envelope ID: 3CCAFD03-C419-4D0E-A7DE-2A6A2AA064D2

PROJECT REFERENCE NO.	SHEET NO.
17BP.14.R.5	2-B
R/W SHEET NO.	

0' 20' 40'

ROADWAY DESIGN ENGINEER — NORTH CAROLINA PROFESSIONAL SEAL 030021 ENGINEER DAVID HAYFIELD — REGISTERED ENGINEER — 8/4/2015

HYDRAULICS ENGINEER — NORTH CAROLINA PROFESSIONAL SEAL 026434 ENGINEER WALTER ROBERTS — REGISTERED ENGINEER — 8/4/2015

REVISIONS

NAD 83/NSRS 2007

DETAIL A
SPECIAL LATERAL 'V' DITCH
(Not to Scale)

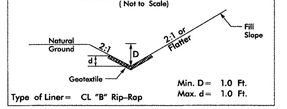

Type of Liner= CL "B" Rip-Rap — Min. D= 1.0 Ft. Max. d= 1.0 Ft.

FROM -TEMP- STA. 11+10 TO -L- STA. 11+60 (LEFT)

DETAIL B
STANDARD 'V' DITCH
(Not to Scale)

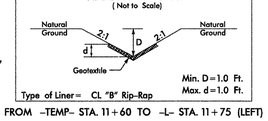

Type of Liner= CL "B" Rip-Rap — Min. D=1.0 Ft. Max. d=1.0 Ft.

FROM -TEMP- STA. 11+60 TO -L- STA. 11+75 (LEFT)

(2) WILMA EDNA MASHBURN HEIRS WB 2000E PG 186

-TEMP- PC Sta. 11+33.69

-DWY1- POT Sta. 11+14.85

END -DWY1-

-DWY1- POT Sta. 10+50.00

BEGIN DETOUR

-TEMP- POT Sta. 11+02.48

-DWY1- POT Sta. 10+00.00 = -L- POC Sta. 12+80.91

BEGIN PROJECT 17BP.14.R.5

-L- POC Sta. 12+00.00

(1) FILZON, INC DB 456 PG 1606

-DWY1- N 54° 59' 23.5" W

SPECIAL LATERAL 'V' DITCH DETAIL "A" 8 TNS CL B RIP-RAP EST. 18 S.Y. FABRIC

-TEMP- PC Sta. 11+94.89

END BRIDGE

-TEMP- Sta. 11+93.36

BEGIN BRIDGE

-TEMP- Sta. 11+63.36

STANDARD 'V' DITCH SEE DETAIL "B" 2 TNS CL B RIP-RAP EST. 5 S.Y. FABRIC

-TEMP- PT Sta. 11+61.84

-TEMP- PT Sta. 12+30.74

TEMPORARY SHORING FROM -TEMP- STA. 12+00 TO STA. 12+10

-DWY3- POT Sta. 11+22.79

-DWY3- PT Sta. 11+11.21

-DWY3- PC Sta. 10+69.16

+27.33 -L- 71.09 LT

(32) DAVID DEAVER DB 615 PG 1063

-L- PCC Sta. 15+79.07 =

END DETOUR

-TEMP- POC Sta. 12+71.65

-DWY3- POT Sta. 10+00.00 = -L- POT Sta. 14+40.00

-TEMP- PC Sta. 12+88.52

+50.00 -L- 30.00 LT

-DWY1- N 33° 24' 14.8" W

-TEMP- N 74° 58' 38.4" E

GRAU 350 TYPE TL-2 TYPE III

REMOVE RIP-RAP

4 TNS CL B RIP-RAP EST. 8 S.Y. FABRIC

5 TNS CL B RIP-RAP EST. 10 S.Y. FABRIC

-L-

N 53° 28' 22.4" E

-L- PCC Sta. 11+71.33 = -TEMP- PC Sta. 10+00.00

-TEMP- PT Sta. 10+44.61

FRANK LITRICKO JR. DB 500 PG 832

(3) HAYWOOD EMC *TF3140/15

AT&T *33

(4) JOHN P. MASHBURN

(5) ROBERT L. BRISTOW BK 835 PG 846

REMOVE RIP-RAP WHEN TEMP. BRIDGE IS REMOVED

BM#1 -BL- STA 7+52.91 40.43' RT ELEV.=3233.73'

-DWY2-TEMP- S 15° 26' 43.8" W

POT Sta. 10+00.00

POT Sta. 10+74.33

+82.83 -L- 56.55 RT

+50.00 -L- 30.00 RT 40.00 RT

S 77° 38' 10.8" E

END PROJECT 17BP.14.R.5 -L- Sta. 14+83.76

ROBERT B. MILLER III AND WIFE, KATHLEEN K. MILLER DB 768 PG 63

(6A) ROBERT L BRISTOW DB 863 PG 1101

WATER LINE ATTATCHED TO NORTH BRIDGE WALL

RETAIN SPRING HSE

HAYWOOD EMC *T16748

POSSIBLE U/G

EXISTING R/W

DIX CREEK RD SR 1105

DIX CREEK RD SR 1106

BL-1 BL-2 BL-3

GATE

DETAIL SHOWING BRIDGE/PAVEMENT RELATIONSHIP

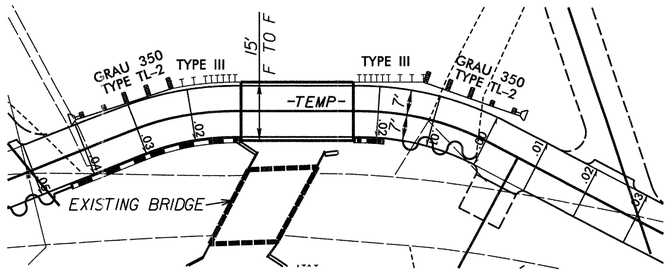

SEE SHEETS S-1 THRU S-18 FOR STRUCTURE PLANS

CURVE DATA FOR -DWY3-

PI Sta 10+91.52
Δ = 48° 11' 02.4" (RT)
D = 114° 35' 29.6"
L = 42.05'
T = 22.36'
R = 50.00'

CURVE DATA FOR -TEMP-

PI Sta 10+22.42	PI Sta 11+47.93	PI Sta 12+13.16	PI Sta 13+59.89
Δ = 13° 59' 30.0" (RT)	Δ = 21° 30' 15.0" (RT)	Δ = 27° 23' 11.8" (RT)	Δ = 52° 44' 04.8" (LT)
D = 3° 21' 50.1"	D = 76° 23' 39.7"	D = 76° 23' 39.7"	D = 39° 47' 50.9"
L = 44.61'	L = 28.15'	L = 35.85'	L = 132.51'
T = 22.42'	T = 14.24'	T = 18.27'	T = 71.36'
R = 182.68'	R = 75.00'	R = 75.00'	R = 143.97'
Se = 0.07	Se = 0.02	Se = 0.01	Se = 0.03

DENOTES TEMPORARY PAVEMENT

SEE SHEETS 4 & 5 FOR -L- PLAN & PROFILE

THE LOUIS BERGER GROUP, Inc.
1001 Wade Avenue, Suite 400
Raleigh, NC 27605-3322

ROADWAY PLANS

8/4/2015 7:16:20 AM
G:\OR Projects\OR1100 - NCDOT Group VI\4303501\Roadway\Proj\4303501_RDY_2B_DET.dgn
G:\CADD\Plot\OR1100\1100_rdy_tbl

DocuSign Envelope ID: FF331E62-8A5F-412F-A5C3-E576D908171E

5/28/99

THE LOUIS BERGER GROUP, Inc.
1001 Wade Avenue, Suite 400
Raleigh, North Carolina 27605

PROJECT REFERENCE NO.	SHEET NO.
17BP.14.R.5	2-C

ROADWAY DESIGN ENGINEER — NORTH CAROLINA PROFESSIONAL SEAL 16003 ENGINEER DEAN D. HATFIELD — REGISTERED ENGINEER 8/3/2015

HYDRAULICS ENGINEER — NORTH CAROLINA PROFESSIONAL SEAL 032134 ENGINEER WALTER ROBERTS — REGISTERED ENGINEER 8/3/2015

0 20 40 HORIZONTAL

0 4 8 VERTICAL

-TEMP-

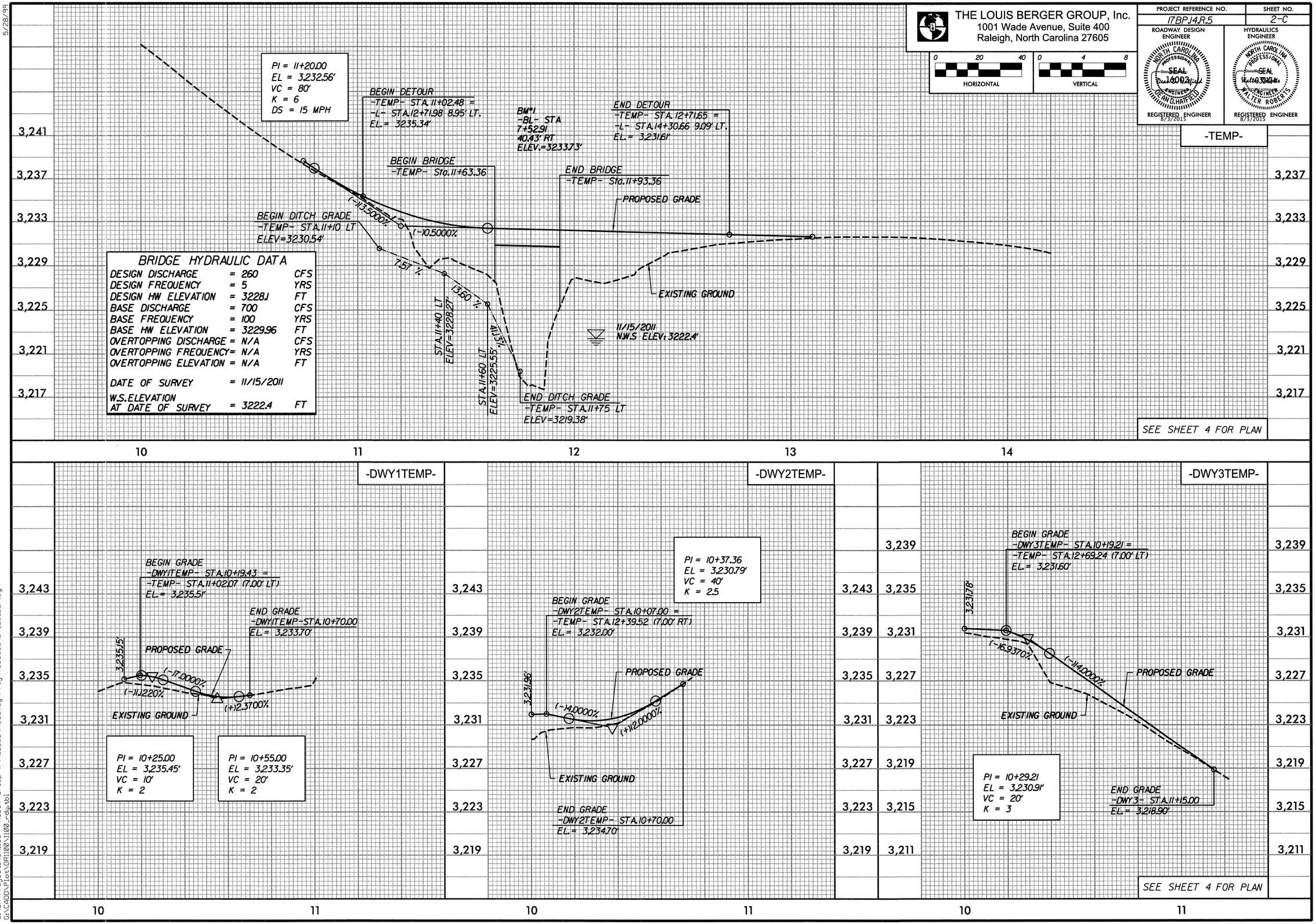

BRIDGE HYDRAULIC DATA

DESIGN DISCHARGE	= 260	CFS
DESIGN FREQUENCY	= 5	YRS
DESIGN HW ELEVATION	= 3228.1	FT
BASE DISCHARGE	= 700	CFS
BASE FREQUENCY	= 100	YRS
BASE HW ELEVATION	= 3229.96	FT
OVERTOPPING DISCHARGE	= N/A	CFS
OVERTOPPING FREQUENCY	= N/A	YRS
OVERTOPPING ELEVATION	= N/A	FT
DATE OF SURVEY	= 11/15/2011	
W.S. ELEVATION AT DATE OF SURVEY	= 3222.4	FT

SEE SHEET 4 FOR PLAN

SEE SHEET 4 FOR PLAN

8/3/2015 11:17:13 AM
G:\OR Projects\OR1100 - NCDOT Group W\430350\Roadway\Proj\430350_RDY_2C_DET.dgn
G:\CADD\Plot\OR1100\1100_rdy.tbl

DocuSign Envelope ID: 968608FE-6D59-4621-9232-D4B8C95C900F

REVISIONS

STATE OF NORTH CAROLINA
DIVISION OF HIGHWAYS

0' 20' 40'

PROJECT REFERENCE NO.	SHEET NO.
I7BPJ4.R.5	3-A
R/W SHEET NO.	

ROADWAY DESIGN ENGINEER	HYDRAULICS ENGINEER
NORTH CAROLINA PROFESSIONAL SEAL 16003 ENGINEER DEAN D. HATFIELD (DocuSigned by: Dean D. Hatfield)	NORTH CAROLINA PROFESSIONAL SEAL 032134 ENGINEER WALTER ROBERTS (DocuSigned by: Walter Roberts)
REGISTERED ENGINEER 8/3/2015	REGISTERED ENGINEER 8/3/2015

SUMMARY OF EARTHWORK (IN CUBIC YARDS)

STATION	STATION	UNCL. EXCAV.	EMBANK. +%	BORROW	WASTE
PHASE I – CONSTRUCT -TEMP-					
-TEMP- 10+80.00	11+63.36	13	121	108	–
-TEMP- 11+93.36	13+10.00	2	274	272	–
-DWY1- 10+10.00	10+70.00	30	0	–	30
-DWY2- 10+10.00	10+50.00	23	0	–	23
-DWY3- 10+10.00	11+10.00	26	33	7	0
	SUBTOTAL:	94	428	387	53
PHASE II – CONSTRUCT -L-					
-L- 12+00.00	13+07.08	75	6	–	69
-L- 13+61.61	14+50.00	74	2	–	72
	SUBTOTAL:	149	8	–	141
PHASE III – REMOVE -TEMP-					
-L- 12+00.00	13+07.08	62	5	–	57
-L- 13+61.61	14+50.00	201	2	–	199
	SUBTOTAL:	263	7	0	256
PROJECT TOTALS:		506	443	387	450
		–			
LOSS DUE TO CLEARING & GRUBBING		-30	–	–	–
–		–	–	–	–
–		–	–	–	–
GRAND TOTALS:		476	443	387	450
–		–	–	–	–
SAY:		480	–	390	–

CONTINGENCY ITEMS
UNDERCUT EXCAVATION 50 CY
SELECT GRANULAR MATERIAL 50 CY
GEOTEXTILE FOR SOIL STABILIZATION 50 SY
CLASS IV SUBGRADE STABILIZATION 50 TON
INCIDENTAL STONE BASE 50 TON

PAVEMENT REMOVAL SUMMARY

SURVEY LINE	STATION	STATION	LOCATION LT/RT/CL	YD^2
-TEMP-	10+75	11+65	LT	98
-TEMP-	11+90	13+00	LT	123
–	–	–	–	–
–	–	–	–	–
–	–	–	–	–
			TOTAL:	221
			SAY:	230

"N" = DISTANCE FROM EDGE OF LANE TO FACE OF GUARDRAIL.
TOTAL SHOULDER WIDTH = DISTANCE FROM EDGE OF TRAVEL LANE TO SHOULDER BREAK POINT.
FLARE LENGTH = DISTANCE FROM LAST SECTION OF PARALLEL GUARDRAIL TO END OF GUARDRAIL.
W = TOTAL WIDTH OF FLARE FROM BEGINNING OF TAPER TO END OF GUARDRAIL.
G = GATING IMPACT ATTENUATOR TYPE 350
NG = NON-GATING IMPACT ATTENUATOR TYPE 350

GUARDRAIL SUMMARY

SURVEY LINE	BEG. STA.	END STA.	LOCATION	LENGTH STRAIGHT	LENGTH SHOP CURVED	LENGTH DOUBLE FACED	WARRANT POINT APPROACH END	WARRANT POINT TRAILING END	"N" DIST. FROM E.O.L.	TOTAL SHOUL. WIDTH	FLARE LENGTH APPROACH END	FLARE LENGTH TRAILING END	W APPROACH END	W TRAILING END	ANCHORS XI MOD	XI	GRAU 350 TL-2	M-350	TYPE-III	CAT-1	VI MOD	B-77	AT-1	IMPACT ATTENUATOR TYPE 350 EA	G	NG	SINGLE FACED GUARDRAIL	REMOVE EXISTING GUARDRAIL	REMOVE AND STOCKPILE EXISTING GUARDRAIL	REMARKS
-L-	12+54.73	12+98.48	RT	43.75'	–	–	–	–	3'	6'	–	–	–	–	–	–	1	–	1	–	–	–	–	–	–	–	–	–	–	–
-L-	12+71.99	13+15.74	LT	43.75'	–	–	–	–	3'	6'	–	–	–	–	–	–	1	–	1	–	–	–	–	–	–	–	–	–	–	–
-L-	13+54.01	13+79.01	RT	25.0'	–	–	–	–	–	–	–	–	–	–	–	–	–	–	1	–	–	–	1	–	–	–	–	–	–	–
-L-	13+69.40	14+13.15	LT	43.75'	–	–	–	–	–	–	–	–	–	–	–	–	1	–	1	–	–	–	–	–	–	–	–	–	–	–
-TEMP-	11+19.61	11+63.36	LT	43.75'	–	–	–	–	3'	6'	–	–	–	–	–	–	1	–	1	–	–	–	–	–	–	–	–	–	–	–
-TEMP-	11+93.36	12+37.11	LT	43.75'	–	–	–	–	–	–	–	–	–	–	–	–	1	–	1	–	–	–	–	–	–	–	–	–	–	–
		–																												
			SUB-TOTALS:	243.75'	–												5		6				1							
	LESS ANCHOR DEDUCTIONS																													
		GRAU 350 TYPE TL-2	5 @ 25.00' =	125'																										
		TYPE III	6 @ 18.75' =	112.5'																										
		AT-1	1 @ 6.25' =	6.25'																										
			ANCHOR TOTALS	243.75'																										
			GRAND TOTALS	0'																										
			SAY	0'																										

NOTE: INVERT ELEVATIONS INDICATED ARE FOR BID PURPOSES ONLY AND SHALL NOT BE USED FOR PROJECT CONSTRUCTION STAKEOUT.
SEE "STANDARDS SPECIFICATIONS FOR ROADS AND STRUCTURES, SECTION 300-5".

LIST OF PIPES, ENDWALLS, ETC. (FOR PIPES 48" & UNDER)

STATION	LOCATION (LT,RT, OR CL)	STRUCTURE NO. FROM	STRUCTURE NO. TO	TOP ELEVATION	INVERT ELEVATION	INVERT ELEVATION	SLOPE CRITICAL	DRAINAGE PIPE (RCP, CSP, CAAP, HDPE, or PVC) 12"	15"	18"	24"	30"	36"	42"	48"	DO NOT USE RCP	DO NOT USE CSP	DO NOT USE CAAP	DO NOT USE HDPE	C.S. PIPE 12" .064	15" .064	18" .064	24" .064	30" .079	36" .079	42" .109	48" .109	R.C. PIPE CLASS III 12"	15"	18"	24"	30"	36"	42"	48"	R.C. PIPE CLASS IV 12"	15"	18"	24"	30"	36"	42"	48"	** " R.C. PIPE (CLASS V)	***" R.C. PIPE CULVERTS, CONTRACTOR DESIGN	***" R.C. PIPE CULVERTS, CONTRACTOR DESIGN	15" SIDE DRAIN PIPE	ENDWALLS STD. 838.01, STD. 838.11 OR STD. 838.80 (UNLESS NOTED OTHERWISE) CU. YDS. R.C.P.	C.S.P.	QUANTITIES FOR DRAINAGE STRUCTURES * TOTAL L.F. FOR PAY QUANTITY SHALL BE COL. 'A' + (1.3 X COL.'B') PER EACH (0' THRU 5.0')	LIN. *FT. A 5.0' THRU 10.0'	B 10.0' AND ABOVE	C.B. STD. 840.01 OR STD. 840.02	FRAME, GRATES AND HOOD STANDARD 840.03 TYPE OF GRATE E	F	G		CONCRETE TRASITIONAL SECTION DROP INLET	CATCH BASIN	D.I. STD. 840.14 OR STD. 840.15	D.I. FRAME & GRATE STD. 840.16	G.D.I. TYPE "A" STD. 840.17 OR 840.26	G.D.I. TYPE "B" STD. 840.18 OR 840.27	G.D.I. TYPE "D" STD. 840.19 OR 840.28	G.D.I. FRAME WITH GRATE STD. 840.20	G.D.I. FRAME WITH TWO GRATE STD. 840.22	G.D.I. (N.S.) FRAME WITH GRATE STD. 840.24	G.D.I. (N.S.) FRAME WITH TWO GRATES STD. 840.29	J.B. STD. 840.31 OR 840.32	TB G.D.I STD. 840.35	F.E.S. FLARED END SECTION STD	CONVERT TO MH	DRAINAGE PIPE ELBOWS NO. & SIZE	DRAINAGE PIPE ELBOWS NO. & SIZE	CONC. & BRICK PIPE PLUG, C.Y. STD. 840.71	CONC. COLLARS CL. "B" C.Y. STD 840.72	PIPE REMOVAL LIN. FT.	REMARKS
-L- 12+67	RT																																																																												51	Remove existing 15" CMP
-DWY1- 10+22	CL																																																																												43	Remove existing 15" CMP
-DWY1- 10+32	CL	1																																											40																															
-L- 13+19	LT																																																																												20	Remove existing 15" CMP
-DWY2- 10+16	CL																																																																												35	Remove existing 15" CMP
-DWY2- 10+22	CL	2																																											28																															
-TEMP- 10+60	LT	3																																											32																														Temp. drive pipe for detour
SHEET TOTALS																																														100																														149	

ABBREVIATIONS

C.B.	CATCH BASIN
N.D.I.	NARROW DROP INLET
D.I.	DROP INLET
G.D.I.	GRATED DROP INLET
G.D.I. (N.S.)	GRATED DROP INLET (NARROW SLOT)
J.B.	JUNCTION BOX
M.H.	MANHOLE
T.B.D.I.	TRAFFIC BEARING DROP INLET
T.B.J.B.	TRAFFIC BEARING JUNCTION BOX

Note: Approximate quantities only. Unclassified Excavation, Fine Grading, and Clearing and Grubbing will be paid for at the contract lump sum price for "Grading."

8/3/2015 11:17:14 AM
G:\OR Projects\OR1100 - NCDOT Group W\430350\Roadway\Proj\430350_RDY_03A_SUMMARY.dgn
G:\CADD\Plot\OR1100\1100_rdy.tbl

THE LOUIS BERGER GROUP, Inc.
1001 Wade Avenue, Suite 400
Raleigh, NC 27605-3322

ROADWAY PLANS

DocuSign Envelope ID: BFD1533A-4D01-4C68-83D3-65ADD49BE47B

PROJECT REFERENCE NO.	SHEET NO.
17BPJ4.R.5	4
R/W SHEET NO.	

0' 20' 40'

ROADWAY DESIGN ENGINEER — NORTH CAROLINA PROFESSIONAL SEAL 16003 ENGINEER DAVID H. HAIFIELD — REGISTERED ENGINEER 8/3/2015

HYDRAULICS ENGINEER — NORTH CAROLINA PROFESSIONAL SEAL 032174 ENGINEER WALTER ROBERTS III — REGISTERED ENGINEER 8/3/2015

REVISIONS

NAD 83/NSRS 2007

-DWY1- POT Sta. 11+14.85
END -DWY1-
-DWY1- POT Sta. 10+70.00

-DWY1- POT Sta. 10+00.00 =
-L- POC Sta. 12+80.91

BEGIN PROJECT 17BPJ4.R.5
-L- POC Sta. 12+00.00

APPROXIMATE LOCATION OF SPRINGHEAD AS PER PROPERTY OWNER.

PAVMENT LIMITS

N 54° 59' 23.5" W

+10.00 -L- 58.00 LT

W/O TIE

GRAVEL

PORCH

ISFD

PORCH

STANDARD 'V' DITCH DETAIL "C" 10 TNS CL B RIP-RAP EST. 15 S.Y. FABRIC

+25.00 -L- 58.00 LT

SPECIAL LATERAL 'V' DITCH DETAIL "A" 7 TNS CL B RIP-RAP EST. 10 S.Y. FABRIC

+80.00 -L- 60.00 LT

DW. CREEK

SHED

+95.00 -L- 110.00 LT

+13.97 -L- 149.45 LT

PUE

SOIL

WILMA EDNA MASHBURN HEIRS
WB 2000E PG 186

(2)

FILZON, INC
DB 456 PG 1606

(1)

+47.00 -L- 42.00 LT

R=10' (TYP)

W/B TIE WALL C

CORR SCN

12'

SPECIAL LATERAL 'V' DITCH DETAIL "A" 14 TNS CL B RIP-RAP EST. 20 S.Y. FABRIC

CLASS II RIP RAP

TEMP

REMOVE 18" CMP

REMOVE 15" CMP

AT&T +33

BL-2

RR SPK

N 74° 58' 37.4" E

RR SPK

O/H TELE ELEV 3253.34'

REMOVE 15" CMP

MCF

REMOVE 15" CMP

16.0' TYP.

20'

36.00'

38.00'

APPROXIMATE LOCATION OF EXISTING WATERLINE, APPROXIMATE DEPTH AROUND 4' AS PER PROPERTY OWNER.

WOODS

SAGE TRL 20 BST

PRIVATE R/W

HAYWOOD EMC *TF3140/15

RETAIN 15" CMP

WOODS

EXISTING R/W

EIP

45BW

FRANK LITRICKO JR.
DB 500 PG 832

N/L

BL-1

60' R/W

DIX CREEK RD 18' BST SR 1106

POSSIBLE U/G TELE.

NO OUTLET

BST

EXISTING R/W

-L- PCC Sta. 11+71.33 =
-TEMP- PC Sta. 10+00.00

-L- PC Sta. 10+57.76

N 32° 38' 28.4" E

CONC

(4)

JOHN P. MASHBURN
DB 251 PG 436

W/O PORCH

HTR

SHED

CONC PATIO

S

HAYWOOD EMC W/METER NO*

SEPTIC TANK AS PER PROPERTY OWNER.

+00.00 -L- 30.00 RT

ROCK STEPS

ROCK WALL

REMOVE ROCK STEPS

-L- PT Sta. 12+84.50

+00.00 -L- 30.00 RT 40.00 RT

SPECIAL LATERAL 'V' DITCH DETAIL "A" 30 TNS CL B RIP-RAP EST. 42 S.Y. FABRIC

+75.00 -L- 57.00 RT

PUE

O/H TELE ELEV 3253.34'

BM#1 -BL- STA 7+52.91 40.43' RT ELEV.=3233.73'

CLASS II RIP RAP

(5)

ROBERT L. BRISTOW
BK 835 PG 846

SPECIAL LATERAL 'V' DITCH DETAIL "E" EST. 7 S.Y. FABRIC

STANDARD 'V' DITCH DETAIL "D" 10 TNS CL II RIP-RAP EST. 20 S.Y. FABRIC

CL 'B' RIP-RAP EST 2 TONS EST 7 S.Y. FABRIC

-L- PC Sta. 13+36.93

+38.77 -L- 45.16' RT

-DWY2- 26° 43' 30" RT

-DWY2- POT Sta. 10+53.85

-DWY2- PT Sta. 10+25.88

PAVMENT LIMITS

-L- PT Sta. 14+24.30

-DWY2- POT Sta. 10+00.00 =
-L- POC Sta. 13+88.00

S 7° 40' 05.5" E
-DWY2- PC Sta. 10+07.46

END PROJECT 17BPJ4.R.5
-L- POT Sta. 14+83.76

(6A)

ROBERT L BRISTOW
DB 863 PG 1101

+82.83 -L- 56.55 RT

AUE

+50.00 -L- 30.00 RT 40.00 RT

SPECIAL LATERAL 'V' DITCH DETAIL "B"

WATER LINE ATTACTHED TO NORTH BRIDGE WALL

-DWY3- POT Sta. 11+22.79

-DWY3- PT Sta. 11+11.21

-DWY3- PC Sta. 10+69.16

(32)

DAVID DEAVER
DB 615 PG 1063

WOODS

+27.33 -L- 71.09 LT

PAVMENT LIMITS

+50.00 -L- 30.00 LT

-DWY3- POT Sta. 10+00.00 =
-L- POT Sta. 14+40.00
-L- PC Sta. 14+83.76

N 33° 24' 14.8" W

-DWY3-

R=10' (TYP)

HAYWOOD EMC TI6746

DO NOT DISTURB

EXISTING R/W

SPRING HSE

AT&T *32

DIX CREEK RD 18' BST SR 1106

60' R/W

20'

N 81° 33' 34.7" E

BL-3

45BW

N 42° 22' 01.8" E
TO US 276

POSSIBLE U/G TELE.

-L- POT Sta. 16+74.80

-L- PT Sta. 16+26.63

-L- PCC Sta. 15+79.07 =

15+00

GATE

BST

EXISTING R/W

ROBERT B. MILLER III AND WIFE, KATHLEEN K. MILLER
DB 768 PG 63

DETAIL SHOWING BRIDGE/PAVEMENT RELATIONSHIP

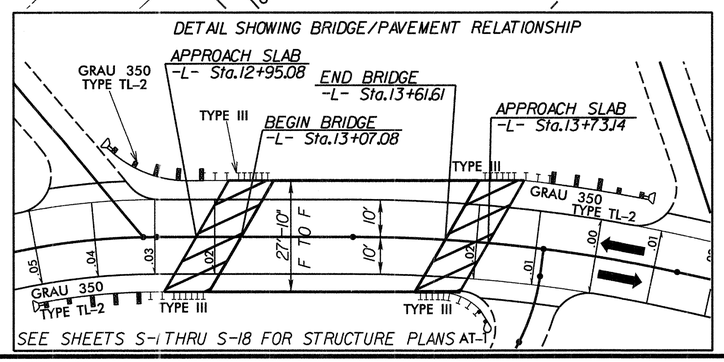

SEE SHEETS S-1 THRU S-18 FOR STRUCTURE PLANS AT-1

DETAIL A
SPECIAL LATERAL 'V' DITCH
(Not to Scale)

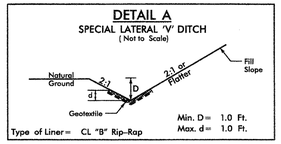

FROM -L- STA. 12+10 TO -L- STA. 12+50 (LEFT)
FROM -L- STA. 12+80 TO -L- STA. 13+00 (LEFT)
FROM -L- STA. 12+00 TO -L- STA. 12+85 (RIGHT)

DETAIL B
SPECIAL LATERAL 'V' DITCH
(Not to Scale)

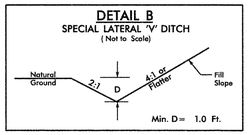

FROM -L- STA. 14+00 TO -L- STA. 14+50 (RIGHT)

DETAIL C
STANDARD 'V' DITCH
(Not to Scale)

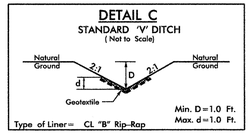

FROM -L- STA. 13+00 TO -L- STA. 13+30 (LEFT)

DETAIL D
STANDARD 'V' DITCH
(Not to Scale)

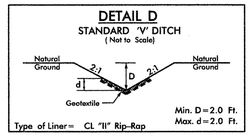

FROM -L- STA. 13+30 TO -L- STA. 13+70 (RIGHT)

DETAIL E
SPECIAL LATERAL 'V' DITCH
(Not to Scale)

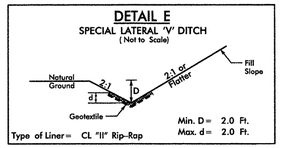

FROM -L- STA. 12+85 TO -L- STA. 13+00 (RIGHT)

CURVE DATA FOR -L-

PI Sta 11+14.61
Δ = 6° 50' 24.0" (RT)
D = 6° 01' 23.3"
L = 113.56'
T = 56.85'
R = 951.26'
Se =

PI Sta 12+29.80
Δ = 35° 29' 45.0" (RT)
D = 31° 21' 50.1"
L = 113.17'
T = 58.47'
R = 182.68'
Se =

PI Sta 13+80.79
Δ = 12° 34' 57.4" (RT)
D = 14° 24' 05.1"
L = 87.37'
T = 43.86'
R = 397.85'
Se =

PI Sta 15+33.23
Δ = 37° 55' 50.4" (LT)
D = 39° 47' 50.9"
L = 95.31'
T = 49.47'
R = 143.97'
Se =

PI Sta 16+02.88
Δ = 7° 15' 42.6" (
D = 15° 16' 04.4"
L = 47.56'
T = 23.81'
R = 375.27'
Se =

CURVE DATA FOR -DWY2-

PI Sta 10+16.78
Δ = 21° 06' 49.3" (RT)
D = 114° 35' 29.6"
L = 18.43'
T = 9.32'
R = 50.00'

CURVE DATA FOR -DWY3-

PI Sta 10+91.52
Δ = 48° 11' 02.4" (RT)
D = 114° 35' 29.6"
L = 42.05'
T = 22.36'
R = 50.00'

SEE SHEET 5 FOR PROFILE
SEE SHEET 2-B & 2-C FOR DETOUR DETAILS
SEE SHEETS S-1 THRU S-21 FOR STRUCTURE PLANS

THE LOUIS BERGER GROUP, Inc.
1001 Wade Avenue, Suite 400
Raleigh, NC 27605-3322

ROADWAY PLANS

8/3/2015 11:7:15 AM
G:\DR Projects\DR11100 - NCDOT Group VI\430350\Roadway\Proj\430350_RDY_04_PSH.dgn
G:\CADD\Plot\DR11100\1100_rdy_tbl

DocuSign Envelope ID: 1EB04E8A-130C-427E-923B-D10BCD3B3954

5/28/99

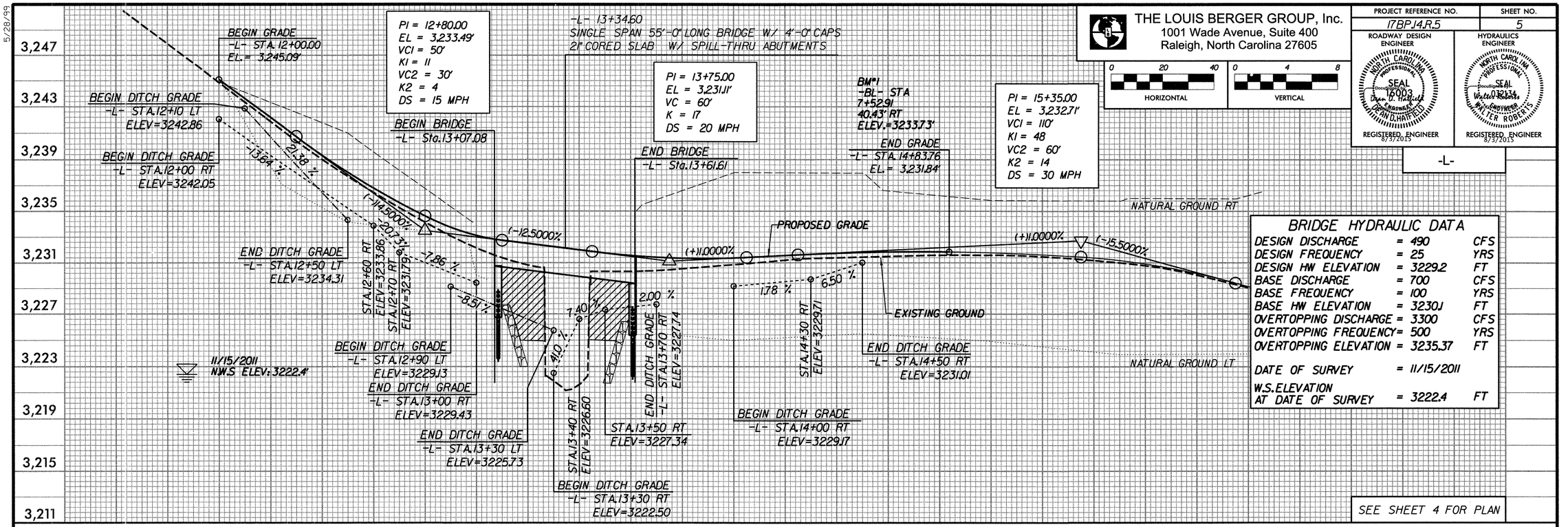

THE LOUIS BERGER GROUP, Inc.
1001 Wade Avenue, Suite 400
Raleigh, North Carolina 27605

PROJECT REFERENCE NO.	SHEET NO.
17BPJ4.R.5	5

HORIZONTAL 0 20 40
VERTICAL 0 4 8

ROADWAY DESIGN ENGINEER
NORTH CAROLINA PROFESSIONAL SEAL 16003 Dean D. Hatfield ENGINEER
REGISTERED ENGINEER
8/31/2015

HYDRAULICS ENGINEER
NORTH CAROLINA PROFESSIONAL SEAL 031134 Walter Roberts III ENGINEER
REGISTERED ENGINEER
8/31/2015

-L-

BRIDGE HYDRAULIC DATA

DESIGN DISCHARGE	= 490	CFS
DESIGN FREQUENCY	= 25	YRS
DESIGN HW ELEVATION	= 3229.2	FT
BASE DISCHARGE	= 700	CFS
BASE FREQUENCY	= 100	YRS
BASE HW ELEVATION	= 3230.1	FT
OVERTOPPING DISCHARGE	= 3300	CFS
OVERTOPPING FREQUENCY	= 500	YRS
OVERTOPPING ELEVATION	= 3235.37	FT
DATE OF SURVEY	= 11/15/2011	
W.S.ELEVATION AT DATE OF SURVEY	= 3222.4	FT

SEE SHEET 4 FOR PLAN

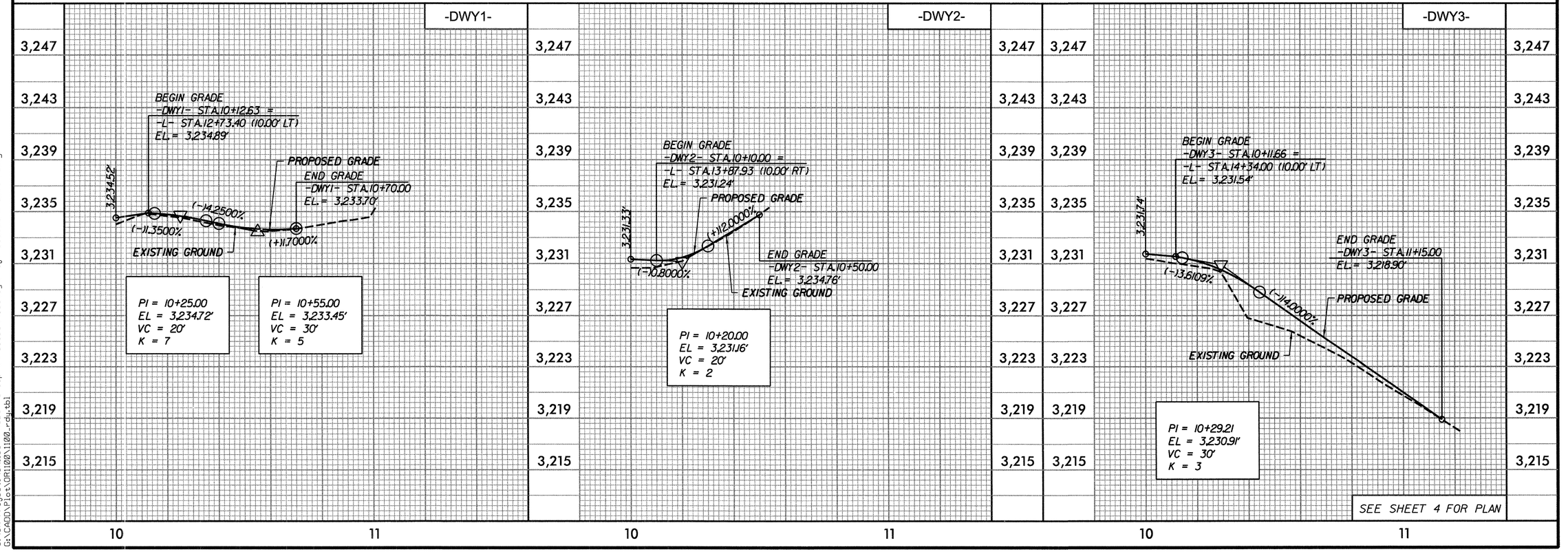

SEE SHEET 4 FOR PLAN

8/3/2015 11:17:16 AM
G:\OR Projects\DR1100 - NCDOT Group W\430350\Roadway\Proj\430350_RDY_05_PFL.dgn
G:\CADD\Plot\DR1100\1100_rdy.tbl

DocuSign Envelope ID: D467904D-26AE-4D00-8E4B-78939E4FF682

STATE OF NORTH CAROLINA
DIVISION OF HIGHWAYS

TRANSPORTATION MANAGEMENT PLAN

HAYWOOD COUNTY

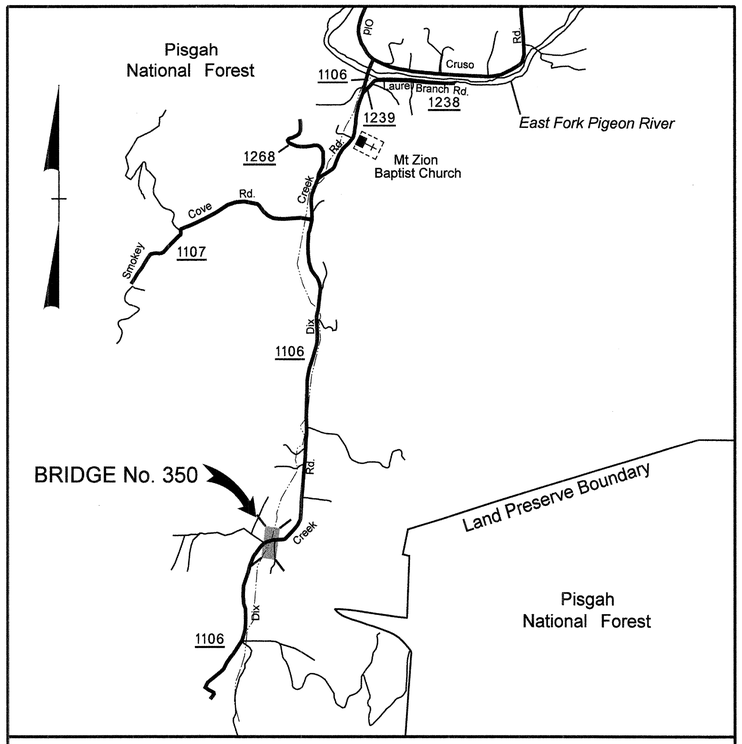

VICINITY MAP ***NTS***

LOCATION: BRIDGE No. 350 ON SR 1106 OVER DIX CREEK

INDEX OF SHEETS

SHEET NO.	TITLE
TMP-1	TITLE SHEET, AND INDEX OF SHEETS
TMP-1A	ROADWAY STANDARD DRAWINGS & LEGEND
TMP-1B	TRANSPORTATION OPERATIONS PLAN: (MANAGEMENT STRATEGIES, GENERAL NOTES AND LOCAL NOTES)
TMP-2	TEMPORARY TRAFFIC CONTROL PHASING
TMP-3	TEMPORARY TRAFFIC CONTROL PHASE I
TMP-4	TEMPORARY TRAFFIC CONTROL PHASE II
TMP-5	TEMPORARY TRAFFIC CONTROL PHASE III
TMP-6	TEMPORARY TRAFFIC CONTROL PHASE IV

SHEET NO.
TMP-1

PROJECT: 17BP.14.R.5

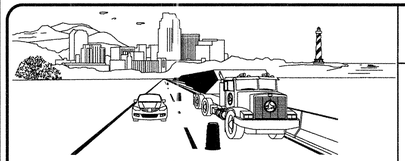

WORK ZONE SAFETY & MOBILITY
"from the MOUNTAINS to the COAST"

N.C.D.O.T. WORK ZONE TRAFFIC CONTROL
1561 MAIL SERVICE CENTER (MSC) RALEIGH, NC 27699-1561
750 N. GREENFIELD PARKWAY, GARNER, NC 27529 (DELIVERY)
PHONE: (919) 773-2800 FAX: (919) 771-2745

J. S. BOURNE, P.E. ***STATE TRAFFIC MANAGEMENT ENGINEER***
D. HATFIELD, P.E. ***TRAFFIC CONTROL PROJECT ENGINEER***
C. WHITE, P. E. ***TRAFFIC CONTROL PROJECT DESIGN ENGINEER***
_____ ***TRAFFIC CONTROL DESIGN ENGINEER***

DIVISION OF HIGHWAYS * STATE OF NORTH CAROLINA * DEPARTMENT OF TRANSPORTATION * WORK ZONE TRAFFIC CONTROL

THE LOUIS BERGER GROUP, Inc.
1001 Wade Avenue, Suite 400
Raleigh, North Carolina 27605

APPROVED: _____
DATE: _____

SEAL

SEAL
NORTH CAROLINA PROFESSIONAL ENGINEER
DAVID HATFIELD
8/4/2015

8/4/2015 9:36:33 AM
G:\DR Projects\DR1100 - NCDOT Group W\430350\Roadway\Proj\430350_RDY_06_TMP1.dgn
1100_rdy_pmp.tb1

DocuSign Envelope ID: D467904D-26AE-4D00-8E4B-789B9E4FF682

PROJ. REFERENCE NO.	SHEET NO.
17BP.14.R.5	TMP-1A

ROADWAY STANDARD DRAWINGS

THE FOLLOWING ROADWAY STANDARDS AS SHOWN IN "ROADWAY STANDARD DRAWINGS" - PROJECT SERVICES UNIT - N.C. DEPARTMENT OF TRANSPORTATION - RALEIGH, N.C., DATED JULY 2012 ARE APPLICABLE TO THIS PROJECT AND BY REFERENCE HEREBY ARE CONSIDERED A PART OF THESE PLANS:

STD. NO.	TITLE
1101.01	WORK ZONE WARNING SIGNS
1101.02	TEMPORARY LANE CLOSURES
1101.05	WORK ZONE VEHICLE ACCESSES
1101.11	TRAFFIC CONTROL DESIGN TABLES
1110.01	STATIONARY WORK ZONE SIGNS
1130.01	DRUMS
1145.01	BARRICADES
1150.01	FLAGGING DEVICES
1160.01	TEMPORARY CRASH CUSHION
1170.01	PORTABLE CONCRETE BARRIER
1205.01	PAVEMENT MARKINGS - LINE TYPES AND OFFSETS
1205.02	PAVEMENT MARKINGS - TWO LANE AND MULTILANE ROADWAYS
1205.12	PAVEMENT MARKINGS - BRIDGES
1261.01	GUARDRAIL AND BARRIER DELINEATORS - INSTALLATION SPACING
1261.02	GUARDRAIL AND BARRIER DELINEATORS - TYPES AND MOUNTING
1262.01	GUARDRAIL END DELINEATION

LEGEND

GENERAL

DIRECTION OF TRAFFIC FLOW

NORTH ARROW

REMOVAL

TRAFFIC CONTROL DEVICES

BARRICADE (TYPE III)

DRUM

TEMPORARY CRASH CUSHION

TEMPORARY SIGNING

STATIONARY SIGN

SIGNALS

TEMP TEMPORARY

TEMPORARY PAVEMENT MARKING

PAINT 4"

PA WHITE EDGELINE

STOPBAR

P4 24" WHITE STOPBAR

APPROVED: _____ DATE: _____

SEAL

NORTH CAROLINA PROFESSIONAL SEAL 18093 ENGINEER DEAN D. HATFIELD

DocuSigned by: Dean D. Hatfield 52D2E5BA07B34F8...

8/4/2015

DIVISION OF HIGHWAYS * STATE OF NORTH CAROLINA * DEPARTMENT OF TRANSPORTATION * WORK ZONE TRAFFIC CONTROL

ROADWAY STANDARD DRAWINGS & LEGEND

8/4/2015 9:36:38 AM
G:\DR Projects\DR1100 - NCDOT Group W\430350\Roadway\Proj\430350_RDY_06_TMP1A.dgn
1100_rdy_tmp.tbl

DocuSign Envelope ID: D467904D-26AE-4D00-8E4B-789B9E4FF682

PROJ. REFERENCE NO.	SHEET NO.
17BP.14.R.5	TMP-1B

MANAGEMENT STRATEGIES

-DURING CONSTRUCTION, SR 1106 (DIX CREEK RD) TRAFFIC WILL BE PLACED IN A ONE LANE, TWO WAY PATTERN PER NCDOT.

-TEMPORARY SIGNALS AT THE BEGINNING AND END OF CONSTRUCTION WILL MANAGE SR 1106 TRAFFIC.

-THE CONSTRUCTION OF TIE INS, TRAFFIC SHIFTS, PLACEMENT OF FINAL SURFACE COURSE AND PAVEMENT MARKINGS WILL BE PERFORMED USING FLAGGERS FOR ONE LANE, TWO WAY TRAFFIC OPERATION.

GENERAL NOTES / LOCAL NOTES

CHANGES MAY BE REQUIRED WHEN PHYSICAL DIMENSIONS IN THE DETAIL DRAWINGS, STANDARD DETAILS, AND ROADWAY DETAILS ARE NOT ATTAINABLE TO MEET FIELD CONDITIONS OR RESULT IN DUPLICATE OR UNDESIRED OVERLAPPING OF DEVICES. MODIFICATION MAY INCLUDE: MOVING, SUPPLEMENTING, COVERING, OR REMOVAL OF DEVICES AS DIRECTED BY THE ENGINEER.

THE FOLLOWING GENERAL NOTES APPLY AT ALL TIMES FOR THE DURATION OF THE CONSTRUCTION PROJECT EXCEPT WHEN OTHERWISE NOTED IN THE PLAN OR DIRECTED BY THE ENGINEER.

LANE AND SHOULDER CLOSURE REQUIREMENTS

A) REMOVE LANE CLOSURE DEVICES FROM THE LANE WHEN WORK IS NOT BEING PERFORMED BEHIND THE LANE CLOSURE OR WHEN A LANE CLOSURE IS NO LONGER NEEDED OR AS DIRECTED BY THE ENGINEER.

B) WHEN PERSONNEL AND/OR EQUIPMENT ARE WORKING WITHIN A LANE OF TRAVEL OF AN UNDIVIDED OR DIVIDED FACILITY, CLOSE THE LANE ACCORDING TO THE TRAFFIC CONTROL PLANS, ROADWAY STANDARD DRAWINGS, OR AS DIRECTED BY THE ENGINEER. CONDUCT THE WORK SO THAT ALL PERSONNEL AND/OR EQUIPMENT REMAIN WITHIN THE CLOSED TRAVEL LANE.

C) WHEN PERSONNEL AND/OR EQUIPMENT ARE WORKING ON THE SHOULDER ADJACENT TO AN UNDIVIDED FACILITY AND WITHIN 5 FT OF AN OPEN TRAVEL LANE, CLOSE THE NEAREST OPEN TRAVEL LANE USING ROADWAY STANDARD DRAWING NO. 1101.02 UNLESS THE WORK AREA IS PROTECTED BY BARRIER OR GUARDRAIL.

WHEN PERSONNEL AND/OR EQUIPMENT ARE WORKING ON THE SHOULDER ADJACENT TO A DIVIDED FACILITY AND WITHIN 10 FT OF AN OPEN TRAVEL LANE, CLOSE THE NEAREST OPEN TRAVEL LANE USING ROADWAY STANDARD DRAWING NO. 1101.02 UNLESS THE WORK AREA IS PROTECTED BY BARRIER OR GUARDRAIL.

D) WHEN PERSONNEL AND/OR EQUIPMENT ARE WORKING WITHIN A LANE OF TRAVEL OF AN UNDIVIDED OR DIVIDED FACILITY, CLOSE THE LANE ACCORDING TO THE TRAFFIC CONTROL PLANS, ROADWAY STANDARD DRAWINGS, OR AS DIRECTED BY THE ENGINEER. CONDUCT THE WORK SO THAT ALL PERSONNEL AND/OR EQUIPMENT REMAIN WITHIN THE CLOSED TRAVEL LANE.

E) DO NOT WORK SIMULTANEOUSLY WITHIN 15 FT ON BOTH SIDES OF AN OPEN TRAVELWAY, RAMP, OR LOOP WITHIN THE SAME LOCATION UNLESS PROTECTED WITH GUARDRAIL OR BARRIER.

PAVEMENT EDGE DROP OFF REQUIREMENTS

F) BACKFILL AT A 6:1 SLOPE UP TO THE EDGE AND ELEVATION OF EXISTING PAVEMENT IN AREAS ADJACENT TO AN OPENED TRAVEL LANE THAT HAS AN EDGE OF PAVEMENT DROP-OFF AS FOLLOWS:

BACKFILL DROP-OFFS THAT EXCEED 2 INCHES ON ROADWAYS WITH POSTED SPEED LIMITS OF 45 MPH OR GREATER.

BACKFILL DROP-OFFS THAT EXCEED 3 INCHES ON ROADWAYS WITH POSTED SPEED LIMITS LESS THAN 45 MPH.

BACKFILL WITH SUITABLE COMPACTED MATERIAL, AS APPROVED BY THE ENGINEER, AT NO EXPENSE TO THE DEPARTMENT.

TRAFFIC PATTERN ALTERATIONS

G) NOTIFY THE ENGINEER TWENTY ONE (21) CALENDAR DAYS PRIOR TO ANY TRAFFIC PATTERN ALTERATION.

SIGNING

H) INSTALL ADVANCE WORK ZONE WARNING SIGNS WHEN WORK IS WITHIN 40 FT FROM THE EDGE OF TRAVEL LANE AND NO MORE THAN THREE (3) DAYS PRIOR TO THE BEGINNING OF CONSTRUCTION.

I) PROVIDE SIGNING AND DEVICES REQUIRED TO CLOSE THE ROAD ACCORDING TO THE ROADWAY STANDARD DRAWINGS AND TRAFFIC CONTROL PLANS.

PROVIDE SIGNING REQUIRED FOR THE OFF-SITE DETOUR ROUTE AS SHOWN IN THE TRAFFIC CONTROL PLANS.

J) ENSURE ALL NECESSARY SIGNING IS IN PLACE PRIOR TO ALTERING ANY TRAFFIC PATTERN.

TRAFFIC BARRIER

K) INSTALL TEMPORARY BARRIER ACCORDING TO THE TRAFFIC CONTROL PLANS A MAXIMUM OF TWO (2) WEEKS PRIOR TO BEGINNING WORK IN ANY LOCATION. ONCE TEMPORARY BARRIER IS INSTALLED AT ANY LOCATION PROCEED IN A CONTINUOUS MANNER TO COMPLETE THE PROPOSED WORK IN THAT LOCATION UNLESS OTHERWISE STATED IN THE TRAFFIC CONTROL PLANS OR AS DIRECTED BY THE ENGINEER.

DO NOT PLACE BARRIER DIRECTLY ON ANY SURFACE OTHER THAN ASPHALT OR CONCRETE.

ONCE TEMPORARY BARRIER IS INSTALLED AT ANY LOCATION AND NO WORK IS PERFORMED BEHIND THE TEMPORARY BARRIER FOR A PERIOD LONGER THAN TWO (2) MONTHS, REMOVE/RESET TEMPORARY BARRIER AT NO COST TO THE DEPARTMENT UNLESS OTHERWISE STATED IN THE TRAFFIC CONTROL PLANS, TEMPORARY BARRIER IS PROTECTING A HAZARD, OR AS DIRECTED BY THE ENGINEER.

INSTALL TEMPORARY BARRIER WITH THE TRAFFIC FLOW BEGINNING WITH THE UPSTREAM SIDE OF TRAFFIC. REMOVE TEMPORARY BARRIER AGAINST THE TRAFFIC FLOW BEGINNING WITH THE DOWNSTREAM SIDE OF TRAFFIC.

INSTALL AND SPACE DRUMS NO GREATER THAN TWICE THE POSTED SPEED LIMIT (MPH) TO CLOSE OR KEEP THE SECTION OF THE ROADWAY CLOSED UNTIL THE TEMPORARY BARRIER CAN BE PLACED OR AFTER THE TEMPORARY BARRIER IS REMOVED.

L) PROTECT THE APPROACH END OF MOVABLE/PORTABLE CONCRETE BARRIER AT ALL TIMES DURING THE INSTALLATION AND REMOVAL OF THE BARRIER BY EITHER A TRUCK MOUNTED IMPACT ATTENUATOR (MAXIMUM 72 HOURS) OR A TEMPORARY CRASH CUSHION.

PROTECT THE APPROACH END OF MOVABLE/PORTABLE CONCRETE BARRIER FROM ONCOMING TRAFFIC AT ALL TIMES BY A TEMPORARY CRASH CUSHION UNLESS THE APPROACH END OF MOVABLE/PORTABLE CONCRETE BARRIER IS OFFSET FROM ONCOMING TRAFFIC AS FOLLOWS OR AS SHOWN IN THE PLANS:

POSTED SPEED LIMIT	MINIMUM OFFSET
40 OR LESS	15 FT
45 - 50	20 FT
55	25 FT
60 MPH or HIGHER	30 FT

TRAFFIC CONTROL DEVICES

M) WHEN LANE CLOSURES ARE NOT IN EFFECT SPACE CHANNELIZING DEVICES IN WORK AREAS NO GREATER IN FEET THAN TWICE THE POSTED SPEED LIMIT (MPH) EXCEPT, 10 FT ON-CENTER IN RADII, AND 3 FT OFF THE EDGE OF AN OPEN TRAVELWAY. REFER TO STANDARD SPECIFICATIONS FOR ROADS AND STRUCTURES SECTIONS 1130 (DRUMS), 1135 (CONES) AND 1180 (SKINNY DRUMS) FOR ADDITIONAL REQUIREMENTS.

N) PLACE TYPE III BARRICADES, WITH "ROAD CLOSED" SIGN R11-2 ATTACHED, OF SUFFICIENT LENGTH TO CLOSE ENTIRE ROADWAY.

O) INSTALL TEMPORARY PAVEMENT MARKINGS AND TEMPORARY PAVEMENT MARKERS ON INTERIM LAYERS OF PAVEMENT AS FOLLOWS:

ROAD NAME	MARKING	MARKER
-L- (DIX CREEK RD)	PAINT	NONE

P) PLACE ONE APPLICATION OF PAINT FOR TEMPORARY TRAFFIC PATTERNS. PLACE A SECOND APPLICATION OF PAINT SIX (6) MONTHS AFTER THE INITIAL APPLICATION AND EVERY SIX MONTHS AS DIRECTED BY THE ENGINEER.

Q) TIE PROPOSED PAVEMENT MARKING LINES TO EXISTING PAVEMENT MARKING LINES.

R) REMOVE/REPLACE ANY CONFLICTING/DAMAGED PAVEMENT MARKINGS AND MARKERS BY THE END OF EACH DAY'S OPERATION.

MISCELLANEOUS

S) IN THE EVENT A TIE-IN CANNOT BE MADE IN ONE DAY'S TIME, BRING THE TIE-IN AREA TO AN APPROPRIATE ROADWAY ELEVATION AS DETERMINED BY THE ENGINEER. PLACE BLACK ON ORANGE "LOOSE GRAVEL" SIGNS (W8-7) AND BLACK ON ORANGE "PAVEMENT ENDS" SIGNS (W8-3) 200 ft AND 400 ft RESPECTIVELY IN ADVANCE OF THE UNEVEN AREAS. USE DRUMS TO DELINEATE THE EDGE OF ROADWAY ALONG UNPAVED AREAS.

APPROVED:_____ DATE:_____

SEAL

NORTH CAROLINA PROFESSIONAL ENGINEER SEAL 46603 DEVIN D. HATFIELD

Digitally signed by: Devin D. Hatfield
8/4/2015

DIVISION OF HIGHWAYS * STATE OF NORTH CAROLINA * DEPARTMENT OF TRANSPORTATION * WORK ZONE TRAFFIC CONTROL

TRANSPORTATION OPERATIONS PLAN

8/4/2015 9:36:42 AM
G:\OR Projects\OR1100 - NCDOT Group W\4303501\Roadway\Proj\4303501_RDY_06_TMP1B.dgn
1100_rdy_pmp.tbl

DocuSign Envelope ID: D467904D-26AE-4D00-8E4B-789B9E4FF682

PROJ. REFERENCE NO.	SHEET NO.
17BP.14.R.5	TMP-2

PROJECT PHASING

MAINTAIN ACCESS TO -DWY1-, -DWY2- AND -DWY3- AT ALL TIMES DURING CONSTRUCTION.

PHASE I

STEP 1:
INSTALL ADVANCE WORK ZONE WARNING SIGNS USING RDWY STD 1101.01, SHEET 3 OF 3.

STEP 2:
AWAY FROM TRAFFIC, PERFORM THE FOLLOWING WORK ON SR 1106:

- CONSTRUCT TEMPORARY ON SITE DETOUR FROM -TEMP- 11+02 +/- TO -TEMP- 12+72 +/- INCLUDING TEMPORARY STRUCTURE AND RELOCATED -DWY3-. (SEE SHEET TMP-3 AND STRUCTURES PLAN)
- INSTALL TEMPORARY GUARDRAIL AND PORTABLE CONCRETE BARRIER AS PER SHEET TMP-3.

PHASE II

STEP 1:
TO BE COMPLETED IN ONE WORK PERIOD. USING RDWY STD 1101.02, SHEET 1 OF 15, COMPLETE THE FOLLOWING ON SR 1106 IN ONE WORK PERIOD:

- CONSTRUCT/INSTALL TEMPORARY TRAFFIC SIGNAL AND PLACE TEMPORARY PAVEMENT MARKINGS (PAINT) FOR LANE SHIFT TAPER AT THE BEGINNING AND END OF PROJECT TO ACCOMODATE A TEMPORARY ONE LANE, TWO WAY TRAFFIC PATTERN. REMOVE OR COVER EXISING DOUBLE YELLOW CENTER LINE IN LANE SHIFT AT THE BEGINNING AND END OF PROJECT. (SEE SHEET TMP-4)
- INSTALL ADDITIONAL SIGNS FOR TEMPORARY TRAFFIC SIGNAL AND TRAFFIC CONTROL DEVICES, ACTIVATE THE SIGNAL AND SHIFT TRAFFIC TO THE TEMPORARY ONE-LANE, TWO-WAY PATTERN AS SHOWN ON SHEET TMP-4.
- INSTALL PORTABLE CONCRETE BARRIER AND CRASH CUSHIONS FROM -TEMP- STA 11+13+/- TO -TEMP- STA 11+33+/- AND -TEMP- STA 11+93+/- TO -TEMP- 12+03+/-. (SEE SHEET TMP-4)

STEP 2:
USING RDWY STD 1101.02, SHEET 1 OF 15, PERFORM THE FOLLOWING WORK ON SR 1106:

- REMOVE THE EXISTING BRIDGE IN ACCORDANCE WITH ROADWAY AND STRUCTURE PLANS.
- CONSTRUCT PHASE I OF PROPOSED BRIDGE. (SEE STRUCTURES PLANS)
- CONSTRUCT PHASE I OF PROPOSED ROADWAY UP TO, BUT NOT INCLUDING THE FINAL LAYER OF SURFACE COURSE FROM -L- STA 12+85+/- TO -L- STA 14+10+/- AND -DWY1-. MAINTAIN ACCESS TO ALL DRIVEWAYS AT ALL TIMES. (SEE SHEET TMP-4)

PHASE III

STEP 1:
IN ONE WORK PERIOD, PERFORM THE FOLLOWING WORK ON SR 1160:

- USING FLAGGERS, RDWY STD 1101.02, SHEET 1 OF 15, CONSTRUCT TIE INS FROM -L- STA 12+00+/- TO -L- STA 12+85+/- AND FROM -L- STA 14+10+/- TO -L- STA 14+90+/-.
- RESET PORTABLE CONCRETE BARRIER AND CRASH CUSHIONS FROM -L- STA 13+10+/- TO -L- STA 13+80+/-. (SEE SHEET TMP-5)
- PLACE TEMPORARY PAVEMENT MARKINGS (PAINT) ON -L- FOR A TEMPORARY ONE-LANE, TWO-WAY TRAFFIC PATTERN AS SHOWN ON SHEET TMP-5.
- RETAIN ADVANCE WORK ZONE SIGNS AND TEMPORARY TRAFFIC SIGNAL FROM PHASE II AND SWITCH TRAFFIC ONTO THE NEWLY CONSTRUCTED SECTION OF SR 1106 AT THE END OF THE WORK PERIOD.

STEP 2:
REMOVE THE TEMPORARY ON SITE DETOUR STRUCTURE FROM -TEMP- 11+02 +/- TO -TEMP- 12+72 +/-. (SEE TMP-5)

PHASE IV

STEP 1:
USING RDWY STD 1101.02, SHEET 1 OF 15, PERFORM THE FOLLOWING WORK ON SR 1106:

- CONSTRUCT PHASE II OF PROPOSED BRIDGE. (SEE STRUCTURE PLANS)
- CONSTRUCT PHASE II OF PROPOSED ROADWAY FROM -L- STA 11+60+/- TO -L- STA 15+30+/-, UP TO BUT NOT INCLUDING THE FINAL LAYER OF SURFACE COURSE, -DWY2- AND PROPOSED DRIVEWAY IMPROVEMENTS AT -L- STA 14+80+/- RT. MAINTAIN ACESS TO DRIVEWAYS AT ALL TIME DURING CONSTRUCTION. (SEE SHEET TMP-4)

STEP 2:
USING FLAGGERS, RDWY STD 1101.02, SHEET 1 OF 15, IN ONE WORK PERIOD, REMOVE PORTABLE CONCRETE BARRIER AND CRASH CUSHIONS AND PLACE THE FINAL LAYER OF SURFACE COURSE AND FINAL PAVEMENT MARKINGS ON PROPOSED -L- FROM STA 11+10+/- TO STA 15+80+/-. SHIFT TRAFFIC ONTO NEWLY CONSTRUCTED ROADWAY AND BRIDGE IN A TWO LANE, TWO WAY PATTERN AT THE END OF THAT WORK PERIOD.

STEP 3:
USING FLAGGERS AS NECESSARY, COMPLETE REMOVAL OF ANY REMAINING ROADWAY AND STUCTURE. REMOVE ALL TEMPORARY TRAFFIC CONTROL DEVICES AND OPEN -L- TO THE FINAL TRAFFIC PATTERN.

APPROVED:_____ DATE:_____

SEAL

NORTH CAROLINA PROFESSIONAL SEAL 40003 ENGINEER D. AND D. HATFIELD
8/4/2015

DIVISION OF HIGHWAYS * STATE OF NORTH CAROLINA * DEPARTMENT OF TRANSPORTATION * WORK ZONE TRAFFIC CONTROL

TEMPORARY TRAFFIC CONTROL PHASING

$$$$$$$SYSTIME$$$$$$
$$$$$$$$$$$$$$$$$$$$DGN$$$$$$$$$$$$$$$$$$$$
$$$$$$USERNAME$$$$

DocuSign Envelope ID: D0CDF8D5-2568-4272-ABBD-102461B3A913

PROJ. REFERENCE NO.	SHEET NO.
17BP.14.R.5	TMP-3

A-A

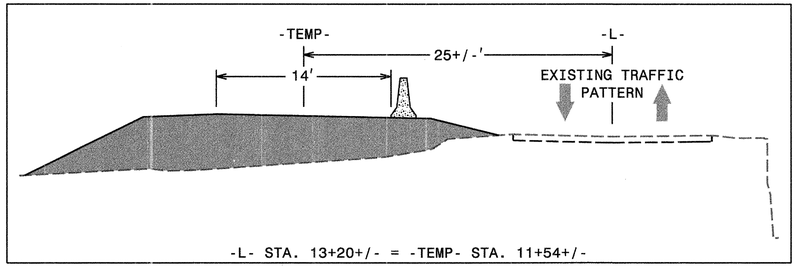

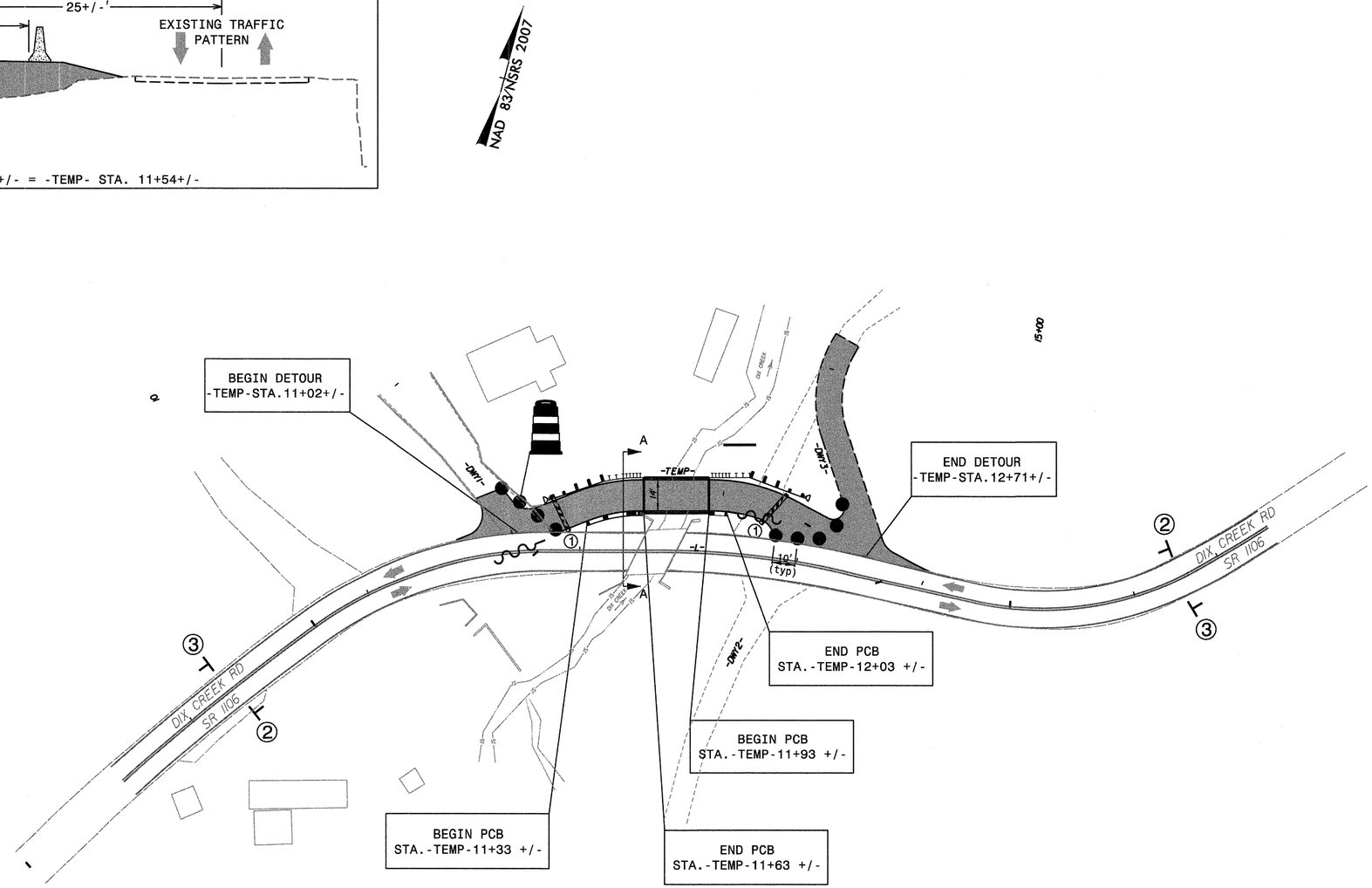

NOTES:
1. FOR CONSTRUCTION PHASING NOTES, SEE SHEET TMP-2
2. ALL SIGN LOCATIONS ARE APPROXIMATE.
3. SEE ROADWAY STANDARD DRAWING NO. 1101.01, SHEET 3 OF 3 FOR SIGN 3 LOCATIONS AND APPLICABLE NOTES.
4. SEE SHEET TMP-4 FOR SIGN 2 LOCATIONS.

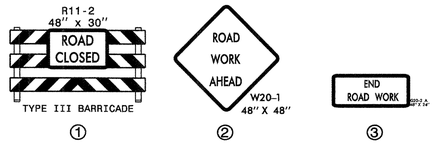

THE LOUIS BERGER GROUP, Inc.
1001 Wade Avenue, Suite 400
Raleigh, North Carolina 27605

APPROVED:_____ DATE:_____

SEAL

NORTH CAROLINA PROFESSIONAL SEAL 16003 ENGINEER DEAN D. HATFIELD
8/3/2015

DIVISION OF HIGHWAYS
STATE OF NORTH CAROLINA
DEPARTMENT OF TRANSPORTATION
WORK ZONE TRAFFIC CONTROL

TEMPORARY TRAFFIC CONTROL PHASE I

8/3/2015 11:17:39 AM
G:\OR Projects\OR1100 - NCDOT Group W\430350\Roadway\Proj\430350_RDY_06_TMP3.dgn
1100_rdy-pmp.tbl

DocuSign Envelope ID: D467904D-26AE-4D00-8E4B-789B9E4FF682

PROJ. REFERENCE NO.	SHEET NO.
17BP.14.R.5	TMP-4

B-B

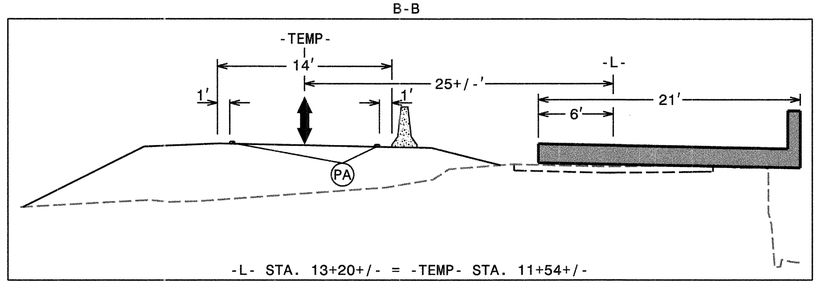

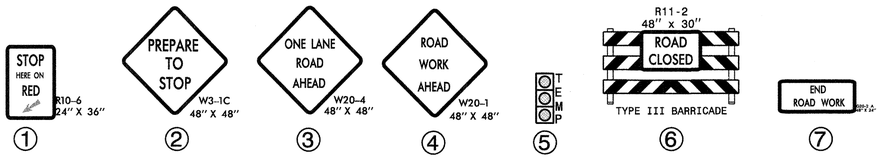

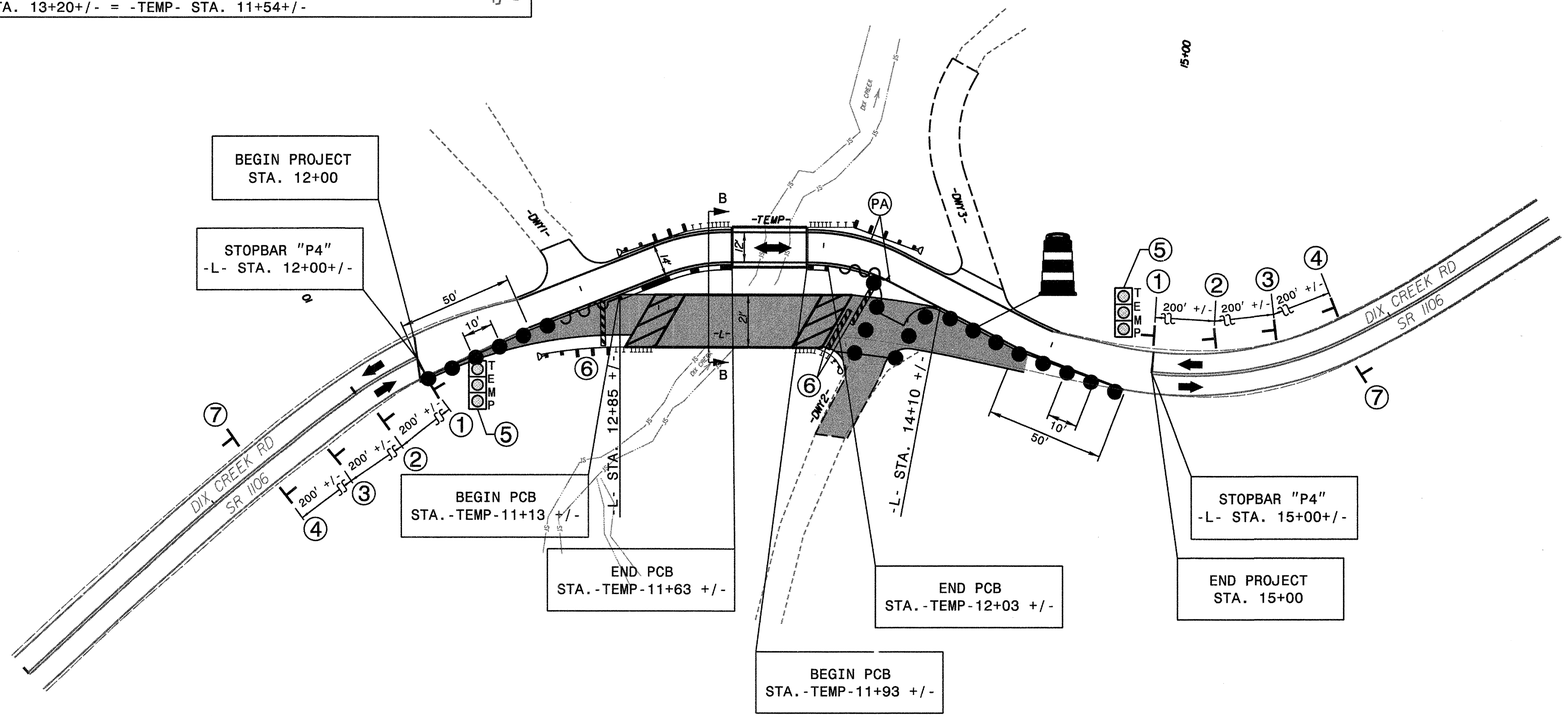

NOTES:
1. FOR CONSTRUCTION PHASING NOTES, SEE SHEET TMP-2

2. ALL SIGN LOCATIONS ARE APPROXIMATE.

3. SEE ROADWAY STANDARD DRAWING NO. 1101.01, SHEET 3 OF 3 FOR SIGN 7 LOCATIONS AND APPLICABLE NOTES.

4. THE TEMPORARY TRAFFIC SIGNAL SHALL BE ACTUATED.

THE LOUIS BERGER GROUP, Inc.
1001 Wade Avenue, Suite 400
Raleigh, North Carolina 27605

APPROVED:_____ DATE:_____

SEAL

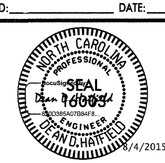

DIVISION OF HIGHWAYS
STATE OF NORTH CAROLINA
DEPARTMENT OF TRANSPORTATION
WORK ZONE TRAFFIC CONTROL

TEMPORARY TRAFFIC CONTROL PHASE II

8/4/2015 9:36:51 AM
G:\DR Projects\DR1100 - NCDOT Group W\430350\Roadway\Proj\430350_RDY_06_TMP4.dgn
1100_rdy_pmp.tbl

DocuSign Envelope ID: 35FAE7D6-6C2D-4786-87E4-2292CF70AAEF

PROJ. REFERENCE NO.	SHEET NO.
17BP.14.R.5	TMP-5

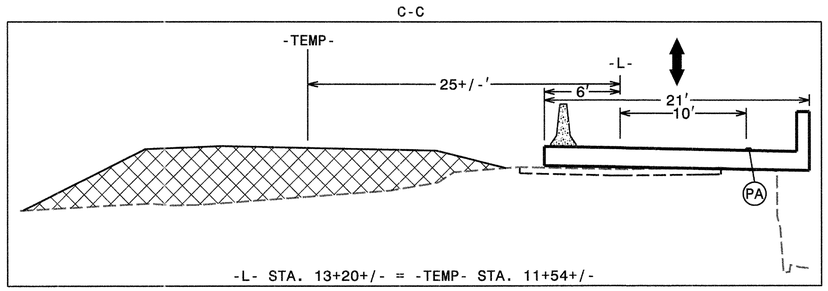

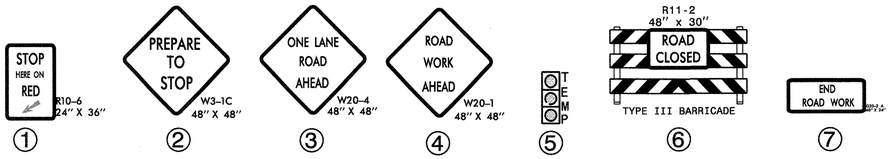

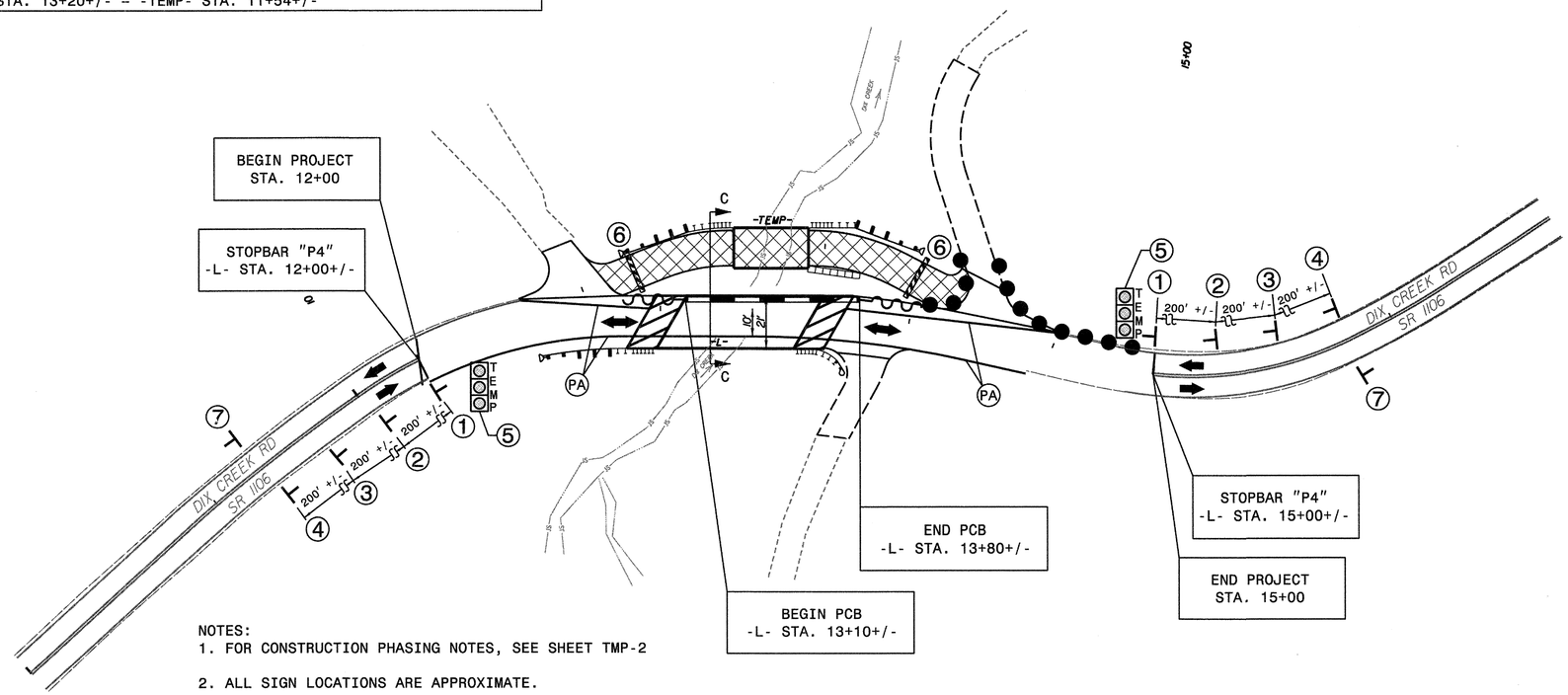

NOTES:
1. FOR CONSTRUCTION PHASING NOTES, SEE SHEET TMP-2

2. ALL SIGN LOCATIONS ARE APPROXIMATE.

3. SEE ROADWAY STANDARD DRAWING NO. 1101.01, SHEET 3 OF 3 FOR SIGN 7 LOCATIONS AND APPLICABLE NOTES.

4. ALL PCB SECTIONS CROSSING BRIDGE SHALL BE FULLY ANCHORED. SEE STRUCTURE PLANS FOR DETAIL.

5. THE TEMPORARY TRAFFIC SIGNAL SHALL BE ACTUATED.

THE LOUIS BERGER GROUP, Inc.
1001 Wade Avenue, Suite 400
Raleigh, North Carolina 27605

APPROVED: _____ DATE: _____

SEAL

NORTH CAROLINA PROFESSIONAL ENGINEER SEAL 16003 DIAN D. HAIFLEY 8/4/2015

DIVISION OF HIGHWAYS * STATE OF NORTH CAROLINA * DEPARTMENT OF TRANSPORTATION * WORK ZONE TRAFFIC CONTROL

TEMPORARY TRAFFIC CONTROL PHASE III

8/4/2015 9:36:56 AM
G:\GR Projects\GR1100 - NCDOT Group W\430350\Roadway\Proj\430350_RDY_06_TMP5.dgn
1102_rdy_pmo.tbl

DocuSign Envelope ID: D467904D-26AE-4D00-8E4B-789B9E4FF682

PROJ. REFERENCE NO.	SHEET NO.
17BP.14.R.5	TMP-6

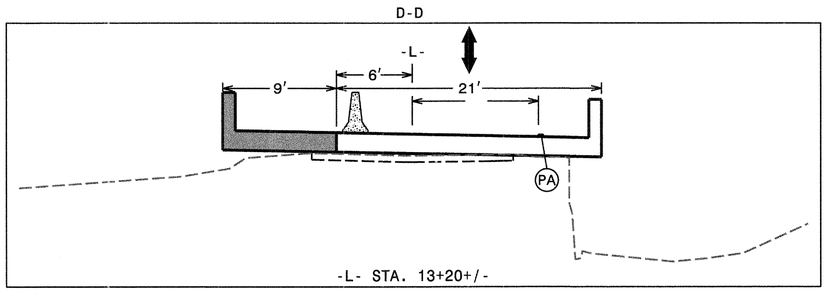

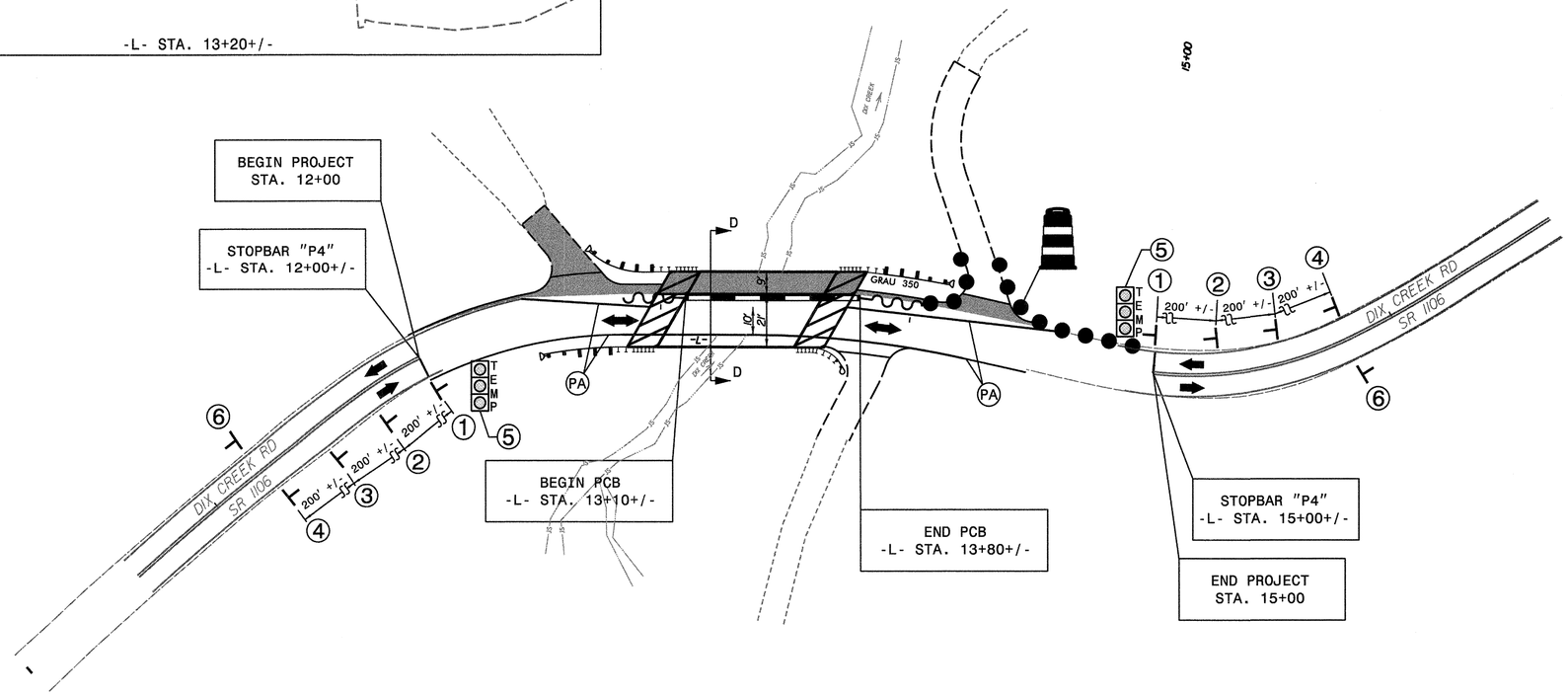

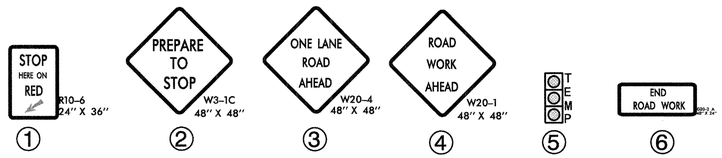

NOTES:
1. FOR CONSTRUCTION PHASING NOTES, SEE SHEET TMP-2
2. ALL SIGN LOCATIONS ARE APPROXIMATE.
3. SEE ROADWAY STANDARD DRAWING NO. 1101.01, SHEET 3 OF 3 FOR SIGN 6 LOCATIONS AND APPLICABLE NOTES.
4. ALL PCB SECTIONS CROSSING BRIDGE SHALL BE FULLY ANCHORED. SEE STRUCTURE PLANS FOR DETAIL.
5. THE TEMPORARY TRAFFIC SIGNAL SHALL BE ACTUATED.

THE LOUIS BERGER GROUP, Inc.
1001 Wade Avenue, Suite 400
Raleigh, North Carolina 27605

APPROVED:_____ DATE:_____

SEAL

NORTH CAROLINA PROFESSIONAL SEAL 16003 ENGINEER DEAN D. HATFIELD
8/4/2015

DIVISION OF HIGHWAYS
STATE OF NORTH CAROLINA
DEPARTMENT OF TRANSPORTATION
WORK ZONE TRAFFIC CONTROL

TEMPORARY TRAFFIC CONTROL PHASE IV

8/4/2015 9:37:00 AM
G:\OR Projects\OR1100 - NCDOT Group W\430350\Roadway\Proj\430350_RDY_06_TMP6.dgn
1100_rdy_tmp.tbl

DocuSign Envelope ID: D9688B80-2898-4235-97CE-F46024451033

STATE	PROJECT NO.	SHEET NO.	TOTAL SHTS.
N.C.	17BP.14.R.5	PMP-1	2

APPROVED: _____

DATE: _____

SEAL

NORTH CAROLINA PROFESSIONAL SEAL 16003 ENGINEER DEAN D. HATFIELD

8/4/2015

STATE OF NORTH CAROLINA
DEPARTMENT OF TRANSPORTATION

PAVEMENT MARKING PLANS

LOCATION: BRIDGE NO. 350 ON SR 1106 OVER DIX CREEK

ROADWAY STANDARD DRAWINGS

THE FOLLOWING ROADWAY STANDARDS AS APPEAR IN "ROADWAY STANDARD DRAWINGS"-ROADWAY DESIGN UNIT-N.C. DEPARTMENT OF TRANSPORTATION-RALEIGH, N.C., DATED JANUARY 2012 ARE APPLICABLE TO THIS PROJECT AND BY REFERENCE HEREBY ARE CONSIDERED A PART OF THESE PLANS:

STD. NO.	TITLE
1205.01	PAVEMENT MARKINGS - LINE TYPES & OFFSETS
1205.02	PAVEMENT MARKINGS - 2 LANE & MULTILANE ROADWAYS
1205.12	PAVEMENT MARKINGS - BRIDGES

PAVEMENT MARKING SCHEDULE

ASPHALT PAVEMENT DESIGN
(AS SHOWN)

PAVEMENT MARKING LINES

PA - PAINT - WHITE EDGELINE (4")
PI - PAINT - YELLOW DOUBLE CENTER LINE (4")

GENERAL NOTES

THE FOLLOWING NOTES APPLY AT ALL TIMES FOR THE DURATION OF THE CONSTRUCTION PROJECT, EXCEPT WHEN NOTED IN THE PLAN, OR DIRECTED BY THE ENGINEER.

A) INSTALL PAVEMENT MARKINGS AND PAVEMENT MARKERS ON THE FINAL SURFACE AS FOLLOWS:

ASPHALT PAVEMENT DESIGN:

ROAD NAME	MARKING	MARKER
ALL	PAINT	NONE
BRIDGE	PAINT	NONE

B) TIE PROPOSED PAVEMENT MARKING LINES TO EXISTING PAVEMENT MARKING LINES.

C) REMOVE/ REPLACE ANY CONFLICTING/ DAMAGED PAVEMENT MARKINGS AND MARKERS.

D) PASSING ZONES WILL BE DETERMINED IN THE FIELD AND MUST BE APPROVED BY THE ENGINEER.

INDEX

SHEET NO.	DESCRIPTION
PMP-1	PAVEMENT MARKING PLAN COVER SHEET
PMP-2	PAVEMENT MARKING DETAIL

THE LOUIS BERGER GROUP, Inc.
1001 Wade Avenue, Suite 400
Raleigh, NC 27605-3322

ROADWAY PLANS

8/4/2015 10:51:20 AM
G:\OR Projects\OR1100 - NCDOT Group W\430350\Roadway\Proj\430350_RDY_07_PMP_01.dgn
1100_rdy-pmp.tbl

DocuSign Envelope ID: A34F1AD0-A68B-42D4-9262-EAF7C106E5BC

STATE	PROJECT NO.	SHEET NO.	TOTAL SHTS.
N.C.	17BP.14.R.5	PMP-2	2

APPROVED: _____

DATE: _____

SEAL

NORTH CAROLINA PROFESSIONAL SEAL 16003 ENGINEER DEAN D. HATFIELD

8/3/2015

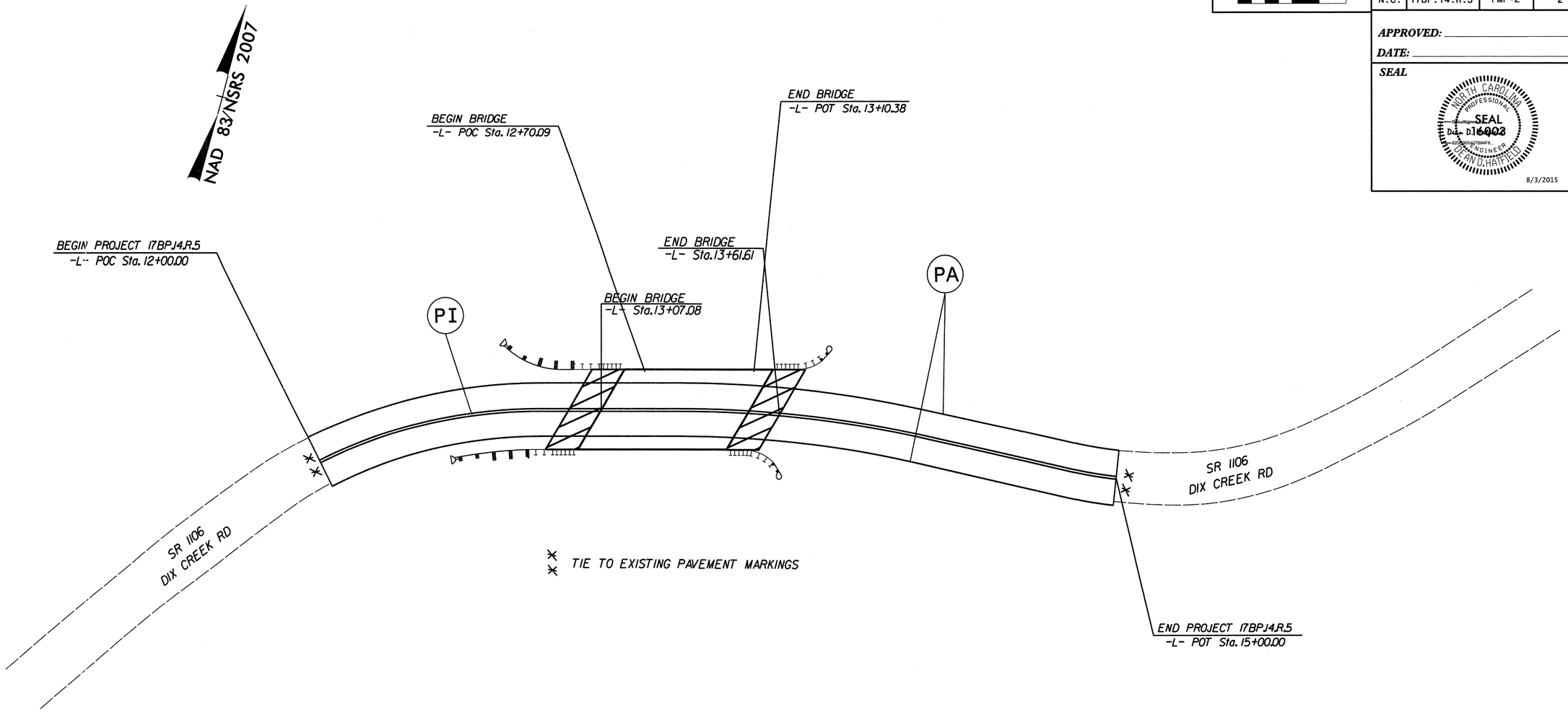

LEGEND

PA - PAINT - WHITE EDGELINE (4")

PI - PAINT - YELLOW DOUBLE CENTER LINE (4")

PAVEMENT MARKING DETAIL
DIX CREEK RD

THE LOUIS BERGER GROUP, Inc.
1001 Wade Avenue, Suite 400
Raleigh, NC 27605-3322

ROADWAY PLANS

8/3/2015 11:18:01 AM
G:\OR Projects\OR1100 - NCDOT Group W\430350\Roadway\Proj\430350_RDY_07_PMP_02.dgn
1100_rdy_pmp.tbl

0' 20' 40'	PROJECT REFERENCE NO.	SHEET NO.
	17BPJ4.R.5	EC-01/CONST.04
	R/W SHEET NO.	

EROSION CONTROL PLANS
PHASE 1

THESE EROSION AND SEDIMENT CONTROL PLANS COMPLY WITH THE REGULATIONS SET FORTH BY THE NCG-010000 GENERAL CONSTRUCTION PERMIT EFFECTIVE AUGUST 3, 2011 ISSUED BY THE NORTH CAROLINA DEPARTMENT OF ENVIRONMENT AND NATURAL RESOURCES DIVISION OF WATER QUALITY

2012 STANDARD DRAWINGS

1604.01	Railroad Erosion Control Detail	1632.01	Rock Inlet Sediment Trap Type A
1605.01	Temporary Silt Fence	1632.02	Rock Inlet Sediment Trap Type B
1606.01	Special Sediment Control Fence	1632.03	Rock Inlet Sediment Trap Type C
1607.01	Gravel Construction Entrance	1633.01	Temporary Rock Silt Check Type A
1622.01	Temporary Berms and Slope Drains	1633.02	Temporary Rock Silt Check Type B
1630.01	Riser Basin	1634.01	Temporary Rock Sediment Dam Type A
1630.02	Silt Basin Type B	1634.02	Temporary Rock Sediment Dam Type B
1630.03	Temporary Silt Ditch	1635.01	Rock Pipe Inlet Sediment Trap Type A
1630.04	Stilling Basin	1635.02	Rock Pipe Inlet Sediment Trap Type B
1630.05	Temporary Diversion	1640.01	Coir Fiber Baffle
1630.06	Special Stilling Basin	1645.01	Temporary Stream Crossing
1631.01	Matting Installation		

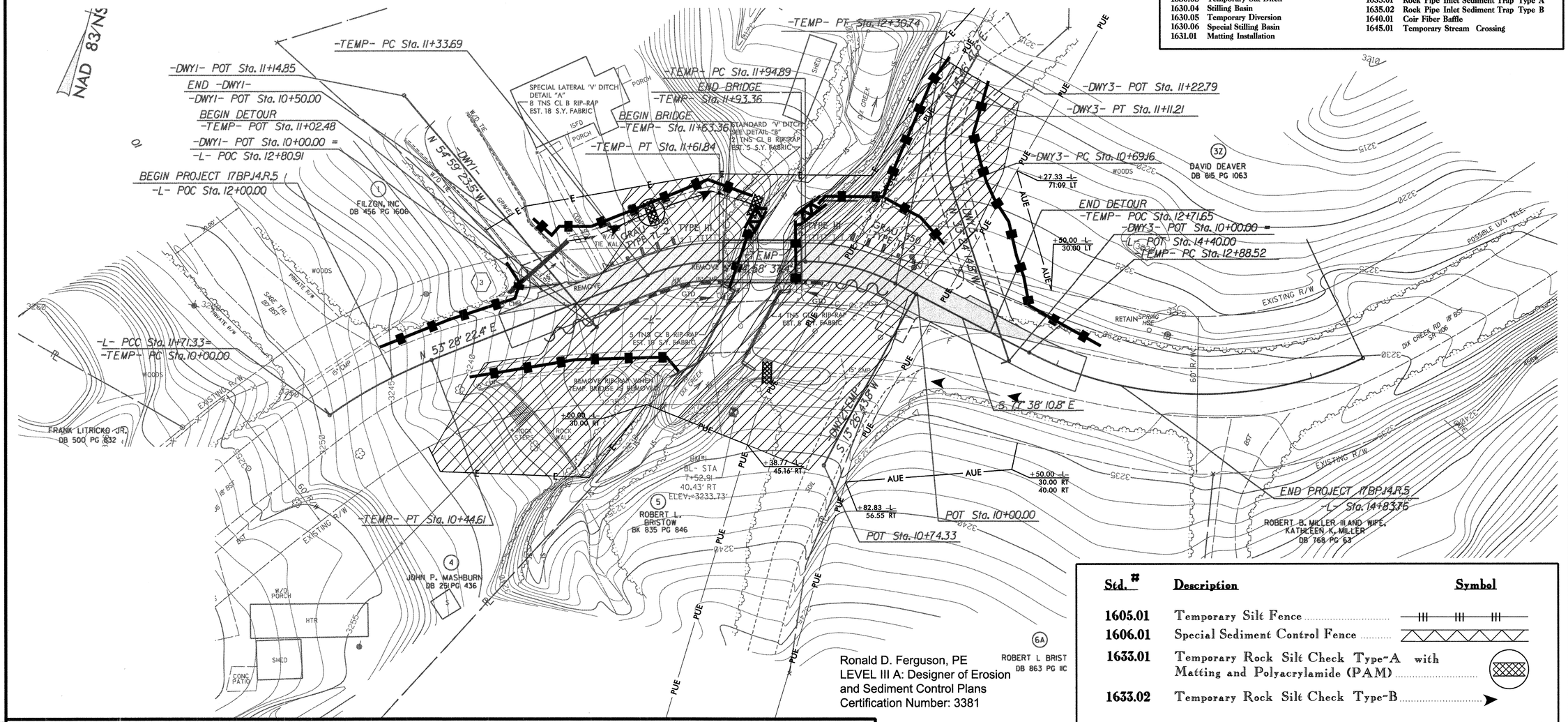

Ronald D. Ferguson, PE
LEVEL III A: Designer of Erosion and Sediment Control Plans
Certification Number: 3381

Std. #	Description	Symbol
1605.01	Temporary Silt Fence	
1606.01	Special Sediment Control Fence	
1633.01	Temporary Rock Silt Check Type-A with Matting and Polyacrylamide (PAM)	
1633.02	Temporary Rock Silt Check Type-B	

Environmentally Sensitive Areas:

This project is located in an "Environmentally Sensitive Area." This designation requires special procedures to be used for clearing and grubbing, temporary stream crossings, and grading operations within the area identified on the plans. This also requires special procedures to be used for seeding and mulching and staged seeding within the project.

Clearing and Grubbing:

In areas identified on the erosion control plans as "Environmentally Sensitive Areas", the Contractor may perform clearing operations, but not grubbing operations until immediately prior to beginning grading operations as described in Section 200, Article 200-1, in the Standard Specifications. The "Environmentally Sensitive Area" shall be defined as a 50 foot buffer zone on both sides of the stream (or depression), measured from top of streambank, (or center of depression). Only clearing operations (not grubbing) shall be allowed in this buffer zone until immediately prior to beginning grading operations. Erosion control devices shall be installed immediately following the clearing operation.

Grading:

Once grading operations begin in identified "Environmentally Sensitive Areas", work will progress in a continuous manner until complete. All construction within these areas must progress in a continuous manner such that each phase is complete and areas permanently stabilized prior to beginning of next phase. Failure on the part of the Contractor to complete any phase of construction in a continuous manner in "Environmentally Sensitive Areas" as specified will be just cause for the Engineer to direct the suspension of work in accordance with Section 108-7 of the Standard Specifications.

Temporary Stream Crossings:

Any crossing of streams within the limits of this project must be accomplished in accordance with Section 107-13(b) of the Standard Specifications.

Seeding and Mulching:

Seeding and mulching shall be performed in accordance with Section 1660 of the Standard Specifications and vegetative cover sufficient to restrain erosion shall be installed immediately following grade establishment.

Seeding and mulching shall be performed on the areas disturbed by construction immediately following final grade establishment. No appreciable time shall lapse into the contract time without stabilization of slopes, ditches and other areas within the "Environmentally Sensitive Areas" as indicated on the erosion control plans.

Stage Seeding:

The work covered by this section shall consist of the establishment of a vegetative cover on cut and fill slopes as grading progresses. Seeding and mulching shall be done in stages on cut and fill slopes which are greater than 20 feet in height measured along the slope, or greater than 2 acres in area. Each stage shall not exceed the limits stated above.

ROADSIDE ENVIRONMENTAL UNIT
DEPARTMENT OF TRANSPORTATION
DIVISION OF HIGHWAYS
RALEIGH, N.C.

2012 STANDARD SPECIFICATIONS

NOTE: ANY DEVIATION FROM OPTIONS GIVEN WILL REQUIRE PRIOR APPROVAL BY ENGINEER.

ADDITIONAL EROSION CONTROL DEVICES MAY NEED TO BE INSTALLED AS DIRECTED BY THE ENGINEER.

ENVIRONMENTALLY SENSITIVE AREA
SEE PROJECT SPECIAL PROVISIONS

SEE SHEET 2B FOR -TEMP- ALIGN & PROFILE
SEE SHEET 5 FOR -L- PROFILE

THE LOUIS BERGER GROUP, Inc.
1001 Wade Avenue, Suite 400
Raleigh, NC 27605-3322

ROADWAY PLANS

REVISIONS

8/3/2015 11:18:03 AM
G:\DR Projects\DR1100 - NCDOT Group VI\430350\Roadway\Proj\430350_RDY_08_EC_01.dgn
G:\CADD\Plot\DR1100\1100_rdy_EC.tbl

0′ 20′ 40′	PROJECT REFERENCE NO.	SHEET NO.
	17BPJ.4.R.5	EC-02/CONST.04
	R/W SHEET NO.	

EROSION CONTROL PLANS
PHASE 2

THESE EROSION AND SEDIMENT CONTROL PLANS COMPLY WITH THE REGULATIONS SET FORTH BY THE NCG–010000 GENERAL CONSTRUCTION PERMIT EFFECTIVE AUGUST 3, 2011 ISSUED BY THE NORTH CAROLINA DEPARTMENT OF ENVIRONMENT AND NATURAL RESOURCES DIVISION OF WATER QUALITY

2012 STANDARD DRAWINGS

1604.01	Railroad Erosion Control Detail	1632.01	Rock Inlet Sediment Trap Type A
1605.01	Temporary Silt Fence	1632.02	Rock Inlet Sediment Trap Type B
1606.01	Special Sediment Control Fence	1632.03	Rock Inlet Sediment Trap Type C
1607.01	Gravel Construction Entrance	1633.01	Temporary Rock Silt Check Type A
1622.01	Temporary Berms and Slope Drains	1633.02	Temporary Rock Silt Check Type B
1630.01	Riser Basin	1634.01	Temporary Rock Sediment Dam Type A
1630.02	Silt Basin Type B	1634.02	Temporary Rock Sediment Dam Type B
1630.03	Temporary Silt Ditch	1635.01	Rock Pipe Inlet Sediment Trap Type A
1630.04	Stilling Basin	1635.02	Rock Pipe Inlet Sediment Trap Type B
1630.05	Temporary Diversion	1640.01	Coir Fiber Baffle
1630.06	Special Stilling Basin	1645.01	Temporary Stream Crossing
1631.01	Matting Installation		

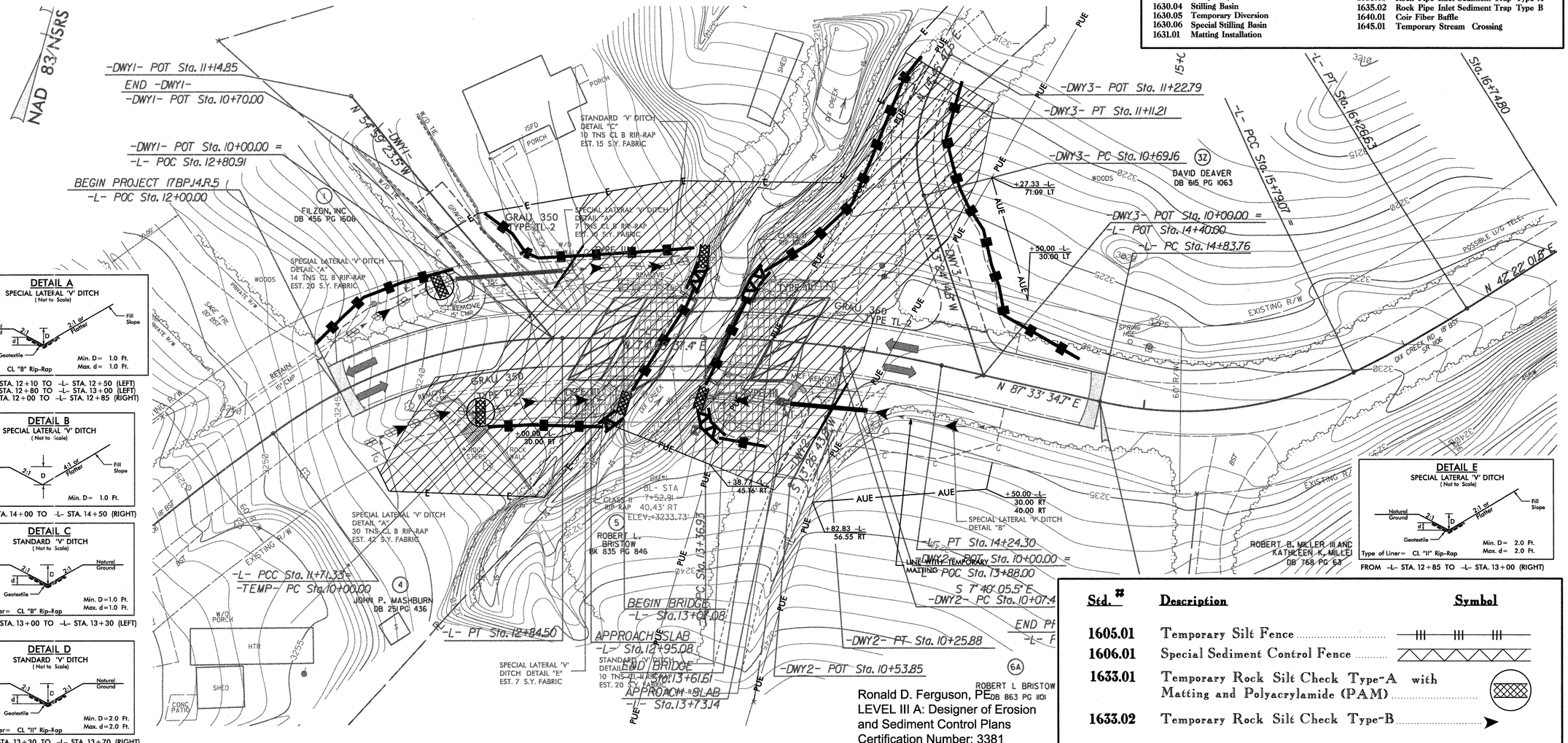

DETAIL A
SPECIAL LATERAL 'V' DITCH
(Not to Scale)

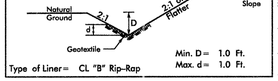

Min. D= 1.0 Ft.
Max. d= 1.0 Ft.
Type of Liner= CL "B" Rip-Rap

FROM –L– STA. 12+10 TO –L– STA. 12+50 (LEFT)
FROM –L– STA. 12+80 TO –L– STA. 13+00 (LEFT)
FROM –L– STA. 12+00 TO –L– STA. 12+85 (RIGHT)

DETAIL B
SPECIAL LATERAL 'V' DITCH
(Not to Scale)

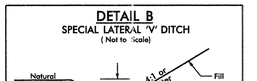

Min. D= 1.0 Ft.

FROM –L– STA. 14+00 TO –L– STA. 14+50 (RIGHT)

DETAIL C
STANDARD 'V' DITCH
(Not to Scale)

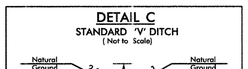

Min. D=1.0 Ft.
Max. d=1.0 Ft.
Type of Liner= CL "B" Rip-Rap

FROM –L– STA. 13+00 TO –L– STA. 13+30 (LEFT)

DETAIL D
STANDARD 'V' DITCH
(Not to Scale)

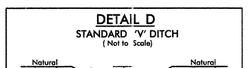

Min. D=2.0 Ft.
Max. d=2.0 Ft.
Type of Liner= CL "II" Rip-Rap

FROM –L– STA. 13+30 TO –L– STA. 13+70 (RIGHT)

DETAIL E
SPECIAL LATERAL 'V' DITCH
(Not to Scale)

Min. D= 2.0 Ft.
Max. d= 2.0 Ft.
Type of Liner= CL "II" Rip-Rap

FROM –L– STA. 12+85 TO –L– STA. 13+00 (RIGHT)

Std. #	Description	Symbol
1605.01	Temporary Silt Fence	
1606.01	Special Sediment Control Fence	
1633.01	Temporary Rock Silt Check Type-A with Matting and Polyacrylamide (PAM)	
1633.02	Temporary Rock Silt Check Type-B	

Ronald D. Ferguson, PE
LEVEL III A: Designer of Erosion and Sediment Control Plans
Certification Number: 3381

Environmentally Sensitive Areas:

This project is located in an "Environmentally Sensitive Area." This designation requires special procedures to be used for clearing and grubbing, temporary stream crossings, and grading operations within the area identified on the plans. This also requires special procedures to be used for seeding and mulching and staged seeding within the project.

Clearing and Grubbing:

In areas identified on the erosion control plans as "Environmentally Sensitive Areas", the Contractor may perform clearing operations, but not grubbing operations until immediately prior to beginning grading operations as described in Section 200, Article 200–1, in the Standard Specifications. The "Environmentally Sensitive Area" shall be defined as a 50 foot buffer zone on both sides of the stream (or depression), measured from top of streambank, (or center of depression). Only clearing operations (not grubbing) shall be allowed in this buffer zone until immediately prior to beginning grading operations. Erosion control devices shall be installed immediately following the clearing operation.

Grading:

Once grading operations begin in identified "Environmentally Sensitive Areas", work will progress in a continuous manner until complete. All construction within these areas must progress in a continuous manner such that each phase is complete and areas permanently stabilized prior to beginning of next phase. Failure on the part of the Contractor to complete any phase of construction in a continuous manner in "Environmentally Sensitive Areas" as specified will be just cause for the Engineer to direct the suspension of work in accordance with Section 108–7 of the Standard Specifications.

Temporary Stream Crossings:

Any crossing of streams within the limits of this project must be accomplished in accordance with Section 107–13(b) of the Standard Specifications.

Seeding and Mulching:

Seeding and mulching shall be performed in accordance with Section 1660 of the Standard Specifications and vegetative cover sufficient to restrain erosion shall be installed immediately following grade establishment.

Seeding and mulching shall be performed on the areas disturbed by construction immediately following final grade establishment. No appreciable time shall lapse into the contract time without stabilization of slopes, ditches and other areas within the "Environmentally Sensitive Areas" as indicated on the erosion control plans.

Stage Seeding:

The work covered by this section shall consist of the establishment of a vegetative cover on cut and fill slopes as grading progresses. Seeding and mulching shall be done in stages on cut and fill slopes which are greater than 20 feet in height measured along the slope, or greater than 2 acres in area. Each stage shall not exceed the limits stated above.

ROADSIDE ENVIRONMENTAL UNIT
DEPARTMENT OF TRANSPORTATION
DIVISION OF HIGHWAYS
RALEIGH, N.C.

2012 STANDARD SPECIFICATIONS

NOTE: ANY DEVIATION FROM OPTIONS GIVEN WILL REQUIRE PRIOR APPROVAL BY ENGINEER.

ADDITIONAL EROSION CONTROL DEVICES MAY NEED TO BE INSTALLED AS DIRECTED BY THE ENGINEER.

ENVIRONMENTALLY SENSITIVE AREA
SEE PROJECT SPECIAL PROVISIONS

SEE SHEET 2B FOR -TEMP- ALIGN & PROFILE
SEE SHEET 5 FOR -L- PROFILE

THE LOUIS BERGER GROUP, Inc.
1001 Wade Avenue, Suite 400
Raleigh, NC 27605-3322

ROADWAY PLANS

REVISIONS

8/3/2015 11:18:05 AM
G:\DR Projects\DR1100 - NCDOT Group W\430350\Roadway\Proj\430350_RDY_08_EC_02.dgn
G:\CADD\Plot\DR1100\1100_rdy_EC.tbl

PROJECT REFERENCE NO.	SHEET NO.
17BPJ4.R.5	EC-03

STATE OF NORTH CAROLINA
DIVISION OF HIGHWAYS

SOIL STABILIZATION TIMEFRAMES

SITE DESCRIPTION	STABILIZATION TIME	TIMEFRAME EXCEPTIONS
PERIMETER DIKES, SWALES, DITCHES AND SLOPES	7 DAYS	NONE
HIGH QUALITY WATER (HQW) ZONES	7 DAYS	NONE
SLOPES STEEPER THAN 3:1	7 DAYS	IF SLOPES ARE 10' OR LESS IN LENGTH AND ARE NOT STEEPER THAN 2:1, 14 DAYS ARE ALLOWED.
SLOPES 3:1 OR FLATTER	14 DAYS	7 DAYS FOR SLOPES GREATER THAN 50' IN LENGTH.
ALL OTHER AREAS WITH SLOPES FLATTER THAN 4:1	14 DAYS	NONE, EXCEPT FOR PERIMETERS AND HQW ZONES.

REVISIONS

8/3/2015 11:18:06 AM
G:\OR Projects\OR1100 - NCDOT Group W\430350 Roadway\Proj\430350.RDY_08_EC_03.dgn
G:\CADD\Plot\OR1100\1100_rdy_EC.tbl

THE LOUIS BERGER GROUP, Inc.
1001 Wade Avenue, Suite 400
Raleigh, NC 27605-3322

ROADWAY PLANS

0′ 20′ 40′	PROJECT REFERENCE NO.	SHEET NO.
	17BP.14.R.5	EC-04
	R/W SHEET NO.	

TEMPORARY ROCK SILT CHECK TYPE 'A' WITH EXCELSIOR MATTING AND POLYACRYLAMIDE (PAM)

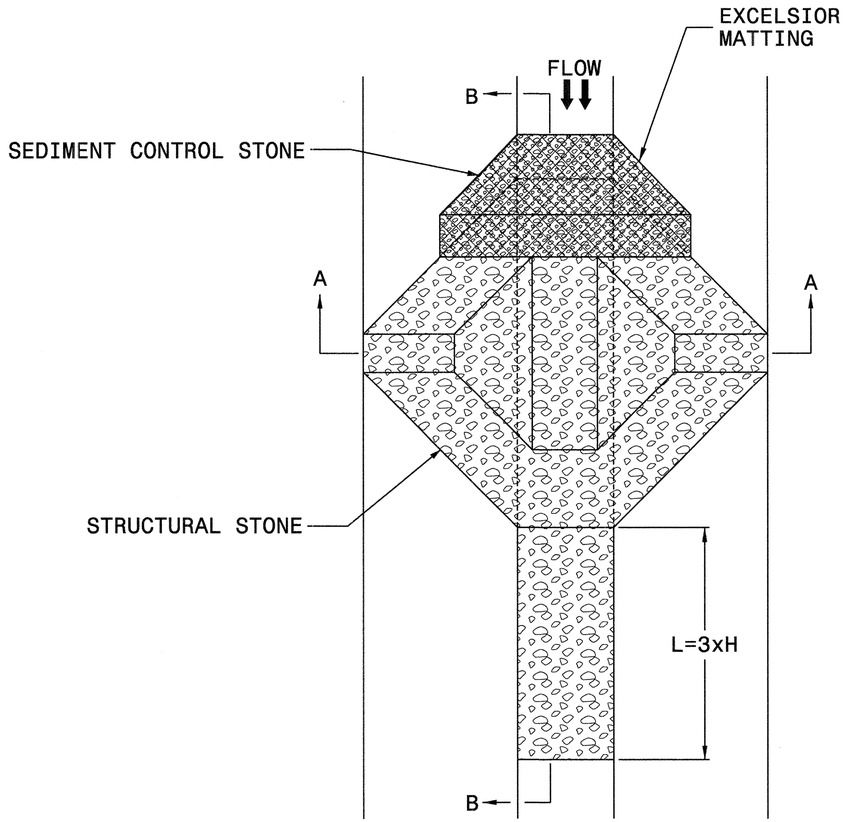

PLAN

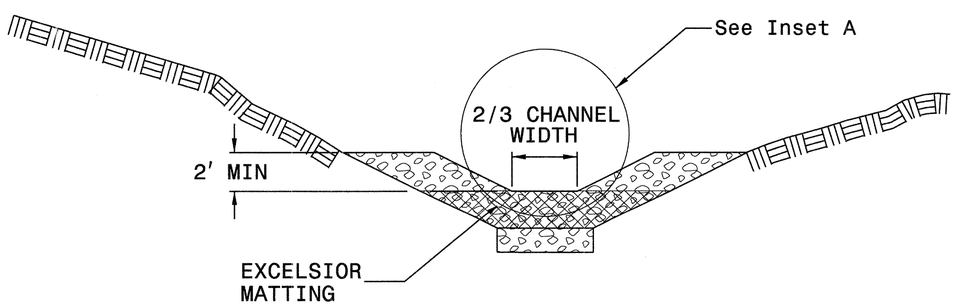

SECTION A-A

NOTES

USE EXCELSIOR FOR MATTING MATERIAL AND ANCHOR MATTING SECTION AT TOP AND BOTTOM WITH CLASS B STONE.

PRIOR TO POLYACRYLAMIDE (PAM) APPLICATION, OBTAIN A SOIL SAMPLE FROM PROJECT LOCATION, AND FROM OFFSITE MATERIAL, AND ANALYZE FOR APPROPRIATE PAM FLOCCULANT TO BE APPLIED TO EACH ROCK SILT CHECK.

INITIALLY APPLY 3.5 OUNCES OF POLYACRYLAMIDE (PAM) TO TOP OF MATTING SECTION AND AFTER EVERY RAINFALL EVENT THAT EQUALS OR EXCEEDS 0.50 INCHES.

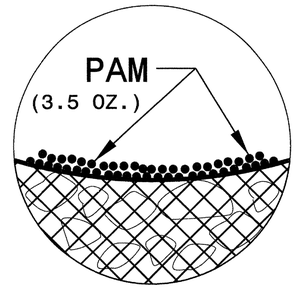

INSET A

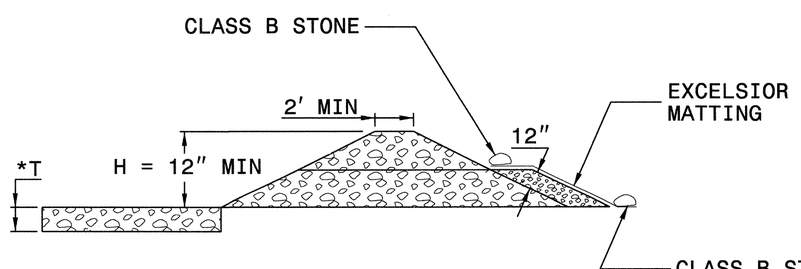

SECTION B-B

*T = 12″ MIN., 18″ MAX.

NOT TO SCALE

THE LOUIS BERGER GROUP, Inc.
1001 Wade Avenue, Suite 400
Raleigh, NC 27605-3322

ROADWAY PLANS

REVISIONS

8/3/2015 11:18:07 AM
G:\DR Projects\DR1100 - NCDOT Group VI\4430350_Roadway\Proj\4430350_RDY_08_EC_04.dgn
G:\CADD\Plot\DR1100\1100_rdy_EC.tbl

TIP PROJECT: 17BP.14.R.5

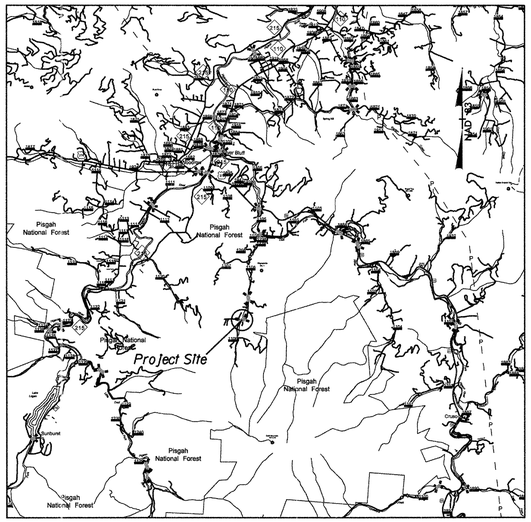

Vicinity Map

T.I.P. NO.	SHEET NO.
17BP.14.R.5	UO–1

STATE OF NORTH CAROLINA
DIVISION OF HIGHWAYS

UTILITIES BY OTHERS PLANS
HAYWOOD COUNTY

LOCATION: BRIDGE NO. 430350 ON SR 1106 DIX CREEK ROAD OVER DIX CREEK

TYPE OF WORK: AERIAL POWER AND TELEPHONE UTILITES

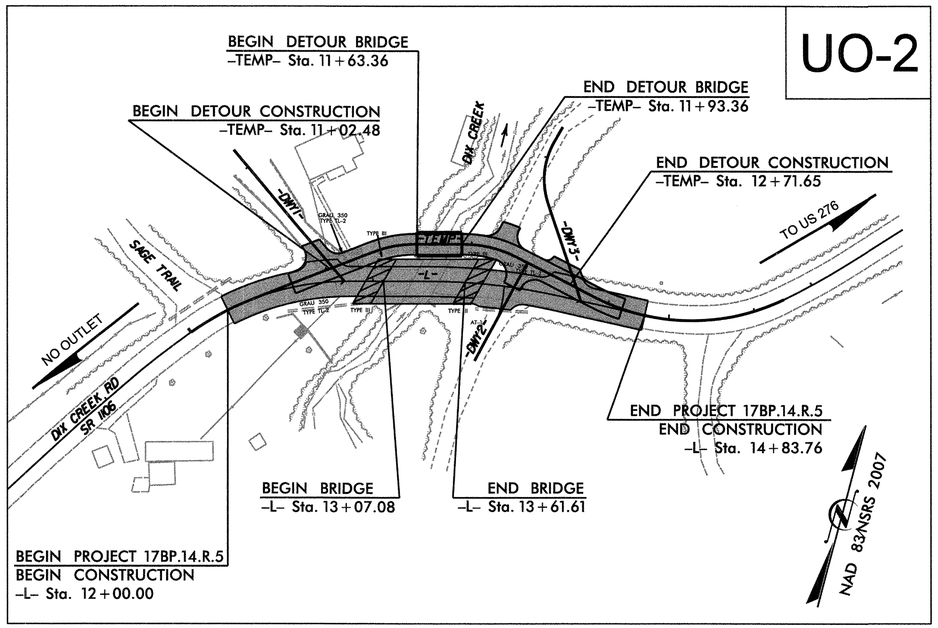

GRAPHIC SCALES

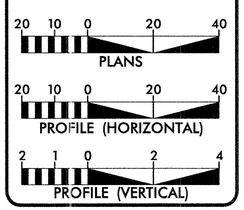

INDEX OF SHEETS

SHEET NO.	*DESCRIPTION*
UO–1	*TITLE SHEET*
UO–2	*UTILITY BY OTHERS PLAN SHEETS*

UTILITY OWNERS ON PROJECT

(1) HAYWOOD EMC – POWER DISTRIBUTION
(2) AT&T – TELEPHONE

PREPARED IN THE OFFICE OF:
DIVISION OF HIGHWAYS
UTILITIES UNIT
UTILITIES ENGINEERING
1591 MAIL SERVICES CENTER
RALEIGH NC 27699–1591
PHONE (919) 707–6690
FAX (919) 250–4151

Roger Worthington, P.E.	*UTILITIES SECTION ENGINEER*
Carl A. Barclay, P.E.	*UTILITIES SQUAD LEADER PROJECT ENGINEER*
James E. Swinson	*UTILITIES PROJECT DESIGNER*

PROJECT REFERENCE NO.	SHEET NO.
17BP.14.R.5	UO-2

UTILITIES BY OTHERS

NOTE:
ALL PROPOSED UTILITY WORK SHOWN ON THIS SHEET WILL BE DONE BY OTHERS

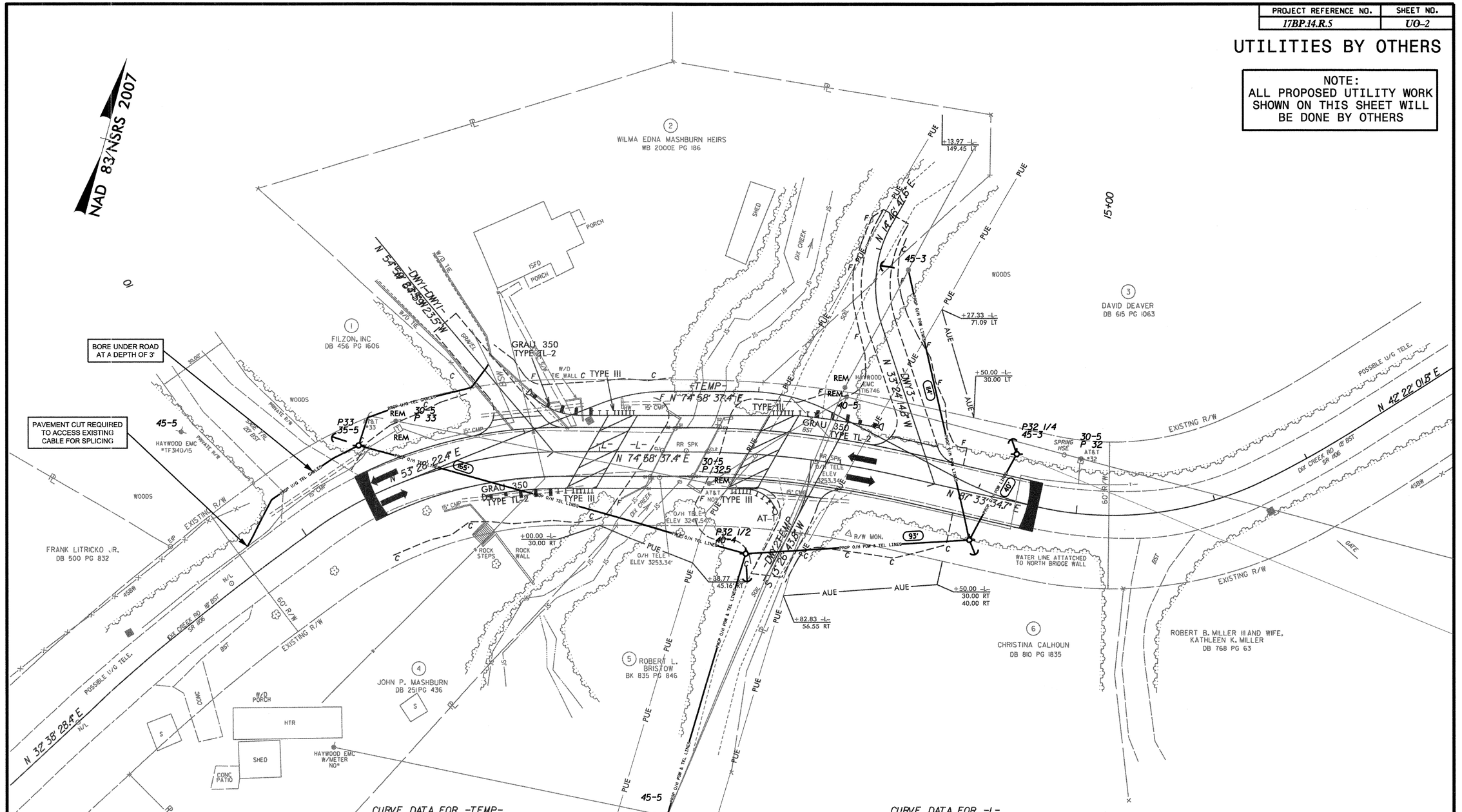

CURVE DATA FOR -TEMP-

PI Sta 10+22.42	PI Sta 11+47.93	PI Sta 12+13.16	PI Sta 13+59.89
Δ = 13° 59' 30.0" (RT)	Δ = 21° 30' 15.0" (RT)	Δ = 27° 23' 11.8" (RT)	Δ = 52° 44' 04.8" (LT)
D = 31° 21' 50.1"	D = 76° 23' 39.7"	D = 76° 23' 39.7"	D = 39° 47' 50.9"
L = 44.61'	L = 28.15'	L = 35.85'	L = 132.51'
T = 22.42'	T = 14.24'	T = 18.27'	T = 71.36'
R = 182.68'	R = 75.00'	R = 75.00'	R = 143.97'
Se =	Se =	Se =	Se =

CURVE DATA FOR -L-

PI Sta 11+14.61	PI Sta 12+29.80	PI Sta 13+80.79	PI Sta 15+33.23	PI Sta 16+02.88
Δ = 6° 50' 24.0" (RT)	Δ = 35° 29' 45.0" (RT)	Δ = 12° 34' 57.4" (RT)	Δ = 37° 55' 50.4" (LT)	Δ = 7° 15' 42.6" (LT)
D = 6° 01' 23.3"	D = 31° 21' 50.1"	D = 14° 24' 05.1"	D = 39° 47' 50.9"	D = 15° 16' 04.4"
L = 113.56'	L = 113.17'	L = 87.37'	L = 95.31'	L = 47.56'
T = 56.85'	T = 58.47'	T = 43.86'	T = 49.47'	T = 23.81'
R = 951.26'	R = 182.68'	R = 397.85'	R = 143.97'	R = 375.27'
Se =	Se =	Se =	Se =	Se =

CURVE DATA FOR -DWY2-

PI Sta 10+16.78
Δ = 21° 06' 49.3" (RT)
D = 114° 35' 29.6"
L = 18.43'
T = 9.32'
R = 50.00'

CURVE DATA FOR -DWY3-

PI Sta 10+91.52
Δ = 48° 11' 02.4" (RT)
D = 114° 35' 29.6"
L = 42.05'
T = 22.36'
R = 50.00'

8/23/99

PROJ. REFERENCE NO.	SHEET NO.
17BP.14.R.5	X-1

17BP.14.R.5
CROSS SECTIONS

INDEX OF SHEETS

TITLE	STATION	SHEET NO.
CROSS-SECTION INDEX		X-1
CROSS-SECTION SUMMARY		X-1A
-L- CROSS-SECTIONS	11+90 - 14+60	X-2 THROUGH X-7
-TEMP- CROSS-SECTIONS	10+70 - 13+10	X-8 THROUGH X-12
-DWY1- CROSS-SECTIONS	10+10 - 10+70	X-13
-DWY2- CROSS-SECTIONS	10+10 - 10+60	X-14
-DWY3- CROSS-SECTIONS	10+10 - 11+10	X-15 THROUGH X-17

NOTE: Approximate quantities only. Unclassified Excavation, Fine Grading, and Clearing and Grubbing will be paid for at the contract lump sum price for "Grading".

$DATE$
$TIME$
$FILE$

PROJ. REFERENCE NO.	SHEET NO.
17.BP.14.R.5	X-1A

STATE OF NORTH CAROLINA
DIVISION OF HIGHWAYS

NOTE: EMBANKMENT COLUMN INCLUDES BACKFILL FOR UNDERCUT

CROSS-SECTION SUMMARY

Station TEMP PHASE I	Uncl. Exc. (cu. yd.)	Embt (cu. yd.)
10+80.00	0	0
10+90.00	0	4
11+00.00	0	3
11+10.00	2	3
11+20.00	4	4
11+30.00	2	11
11+40.00	1	19
11+50.00	2	25
11+60.00	2	36
11+70.00	0	0
11+80.00	0	0
11+90.00	0	0
12+00.00	0	52
12+10.00	0	65
12+20.00	0	48
12+30.00	0	38
12+40.00	0	22
12+50.00	0	9
12+60.00	0	3
12+70.00	0	1
12+80.00	0	0
12+90.00	1	0
13+00.00	1	0

Station L	Uncl. Exc.	Embt
PHASE II	(cu. yd.)	(cu. yd.)
12+00.00	0	0
12+10.00	7	0
12+20.00	7	0
12+30.00	7	1
12+40.00	6	2
12+50.00	5	1
12+60.00	5	0
12+70.00	7	0
12+80.00	9	0
12+90.00	12	0
13+00.00	10	1
13+10.00	0	0
13+20.00	0	0
13+30.00	0	0
13+40.00	0	0
13+50.00	0	0
13+60.00	0	0
13+70.00	7	1
13+80.00	5	1
13+90.00	1	0
14+00.00	5	0
14+10.00	12	0
14+20.00	15	0
14+30.00	14	0
14+40.00	11	0
14+50.00	4	0

Station -TEMP- REM. PHASE III	Uncl. Exc. (cu. yd.)	Embt (cu. yd.)
12+00.00	0	0
12+10.00	1	0
12+20.00	3	0
12+30.00	3	1
12+40.00	3	2
12+50.00	2	1
12+60.00	3	0
12+70.00	4	0
12+80.00	7	0
12+90.00	14	0
13+00.00	22	0
13+10.00	0	0
13+20.00	0	0
13+30.00	0	0
13+40.00	0	0
13+50.00	0	0
13+60.00	0	0
13+70.00	35	1
13+80.00	45	1
13+90.00	46	0
14+00.00	35	0
14+10.00	18	0
14+20.00	9	0
14+30.00	8	0
14+40.00	4	0
14+50.00	1	0

Station Dwy1	Uncl. Exc. (cu. yd.)	Embt (cu. yd.)
10+10.00	0	0
10+20.00	8	0
10+30.00	6	0
10+40.00	4	0
10+50.00	4	0
10+60.00	4	0
10+70.00	4	0

Station Dwy2	Uncl. Exc. (cu. yd.)	Embt (cu. yd.)
10+10.00	0	0
10+20.00	6	0
10+30.00	6	0
10+40.00	6	0
10+50.00	5	0

Station Dwy3	Uncl. Exc. (cu. yd.)	Embt (cu. yd.)
10+10.00	0	0
10+20.00	4	0
10+30.00	5	3
10+40.00	5	8
10+50.00	2	10
10+60.00	0	6
10+70.00	0	2
10+80.00	1	0
10+90.00	2	0
11+00.00	3	0
11+10.00	4	0

8/23/99

0 2.5 5	PROJ. REFERENCE NO.	SHEET NO.
	17BP.14.R.5	X-2

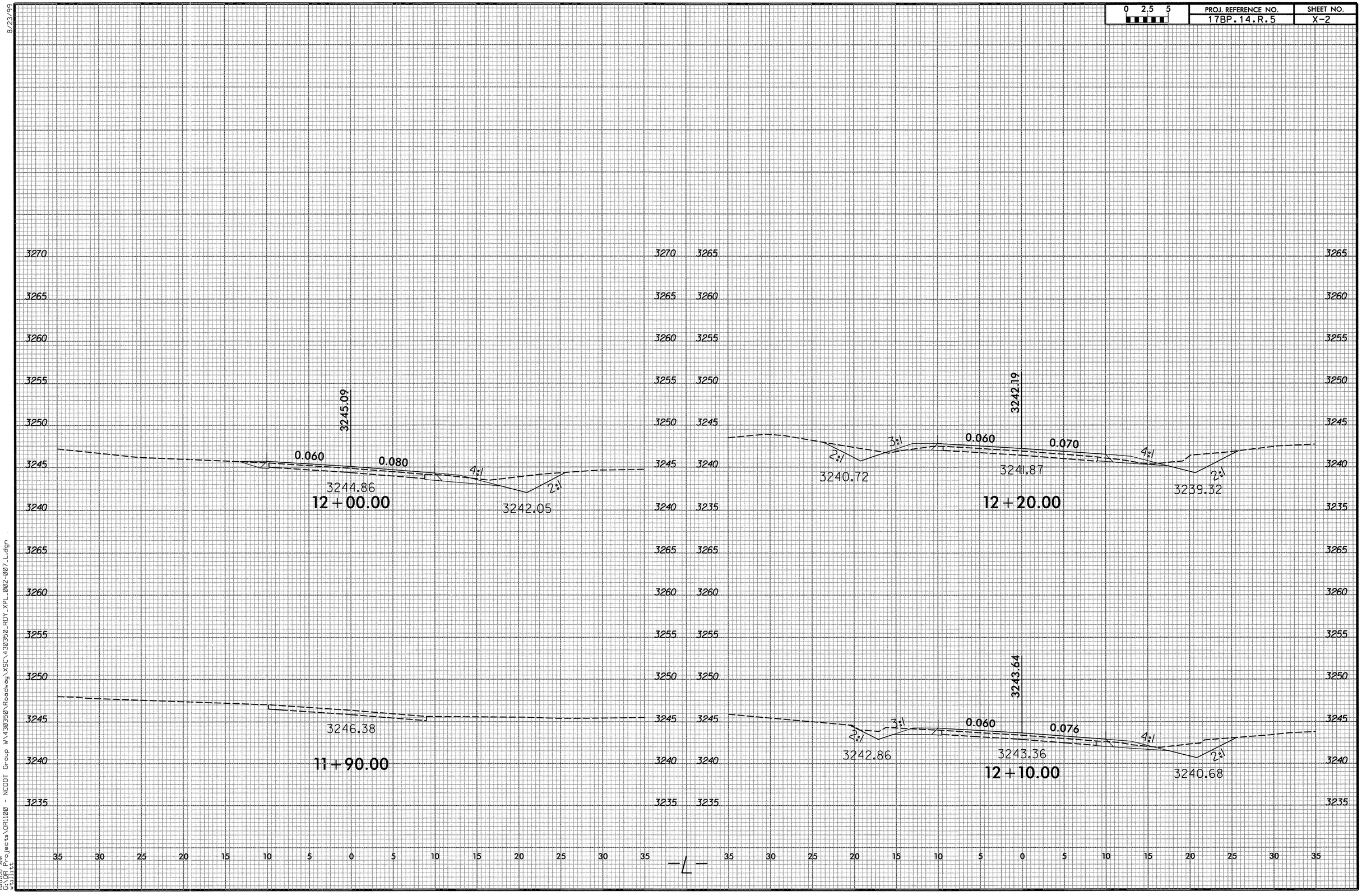

11:8:08 AM
G:\DR Projects\DR1100 - NCDOT Group W\430350\Roadway\XSC\430350_RDY_XPL_002-007_L.dgn
wtillitt

8/23/99

0 2,5 5	PROJ. REFERENCE NO.	SHEET NO.
	17BP.14.R.5	X-3

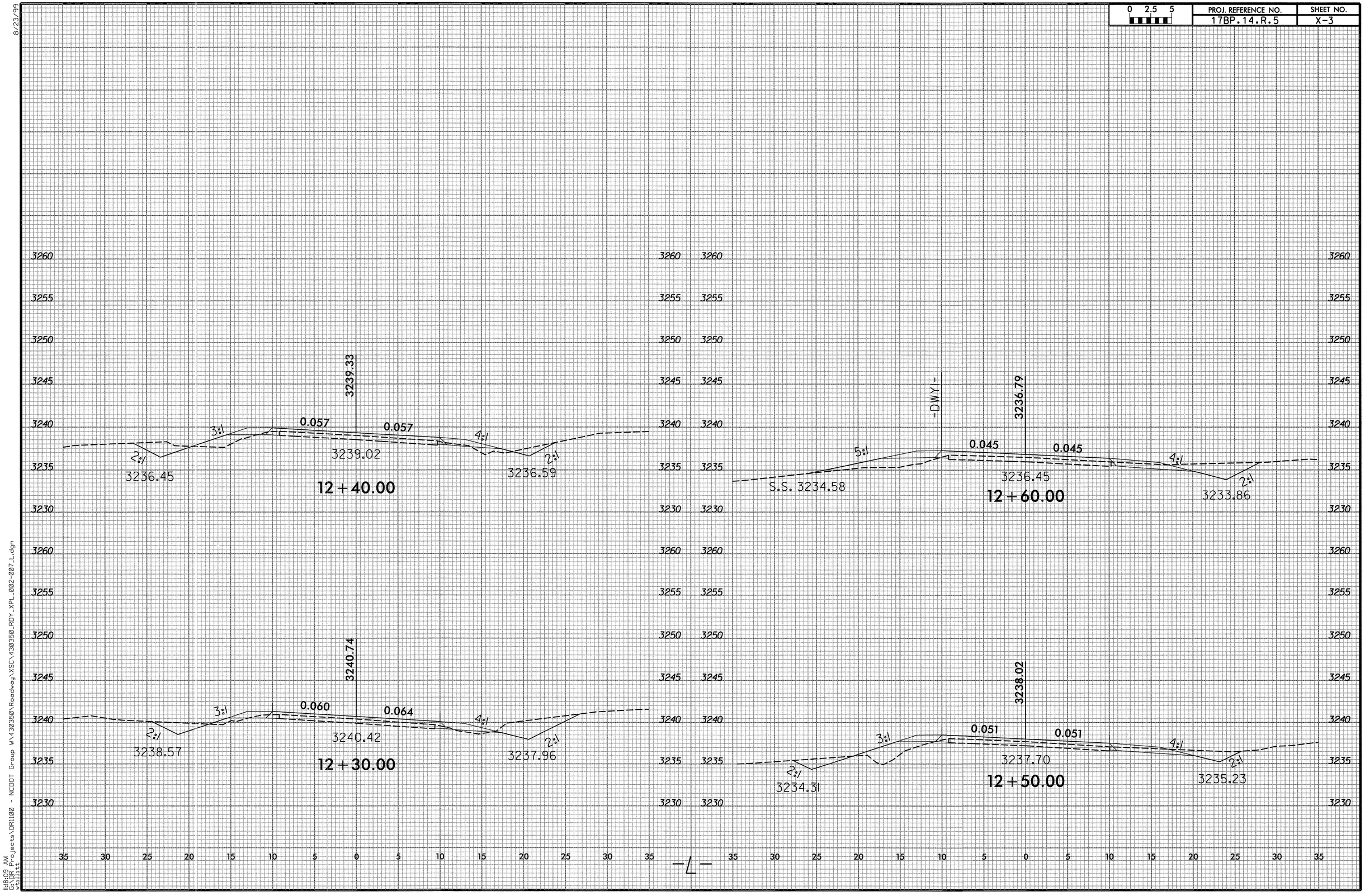

11:8:09 AM
G:\DR Projects\DR1100 - NCDOT Group W\430350\Roadway\XSC\430350_RDY_XPL_002-007_L.dgn
Utilities

8/23/99

0 2.5 5	PROJ. REFERENCE NO.	SHEET NO.
	17BP.14.R.5	X-4

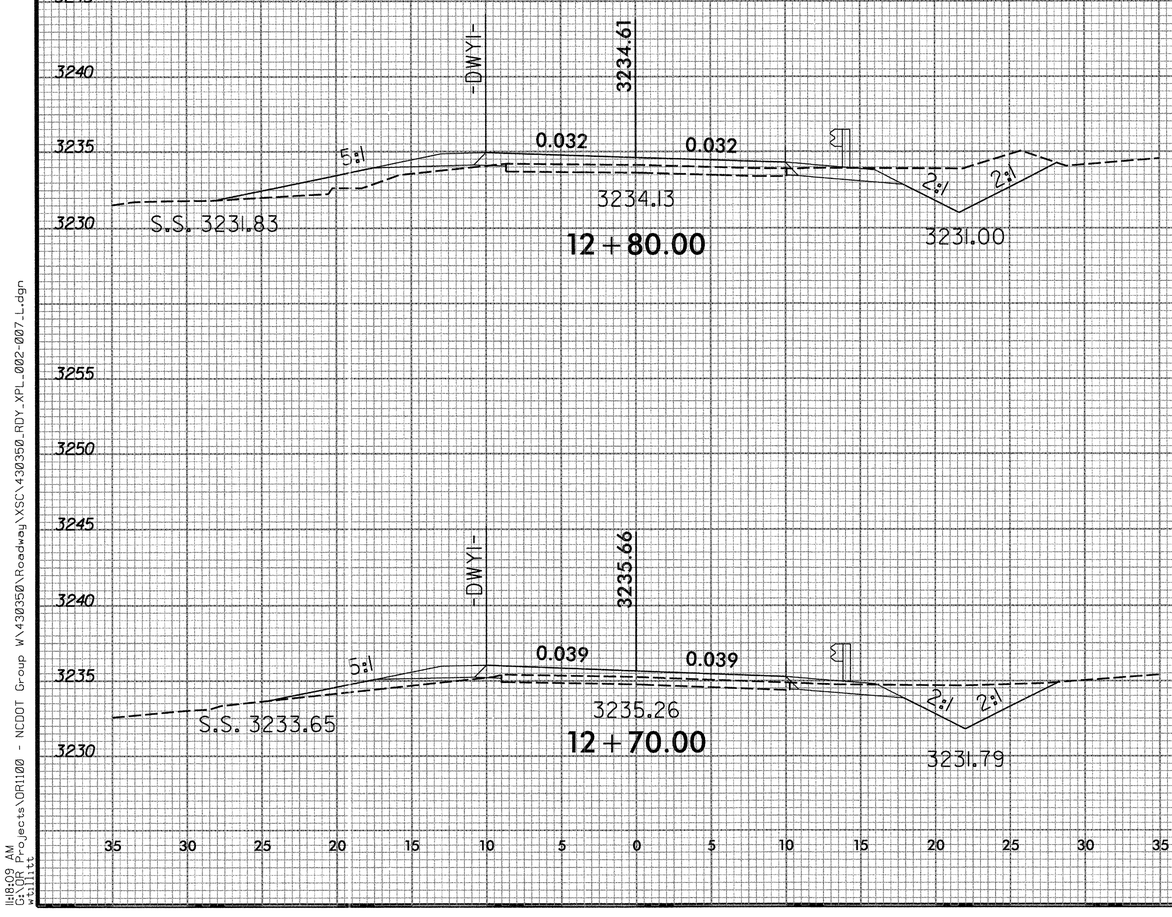

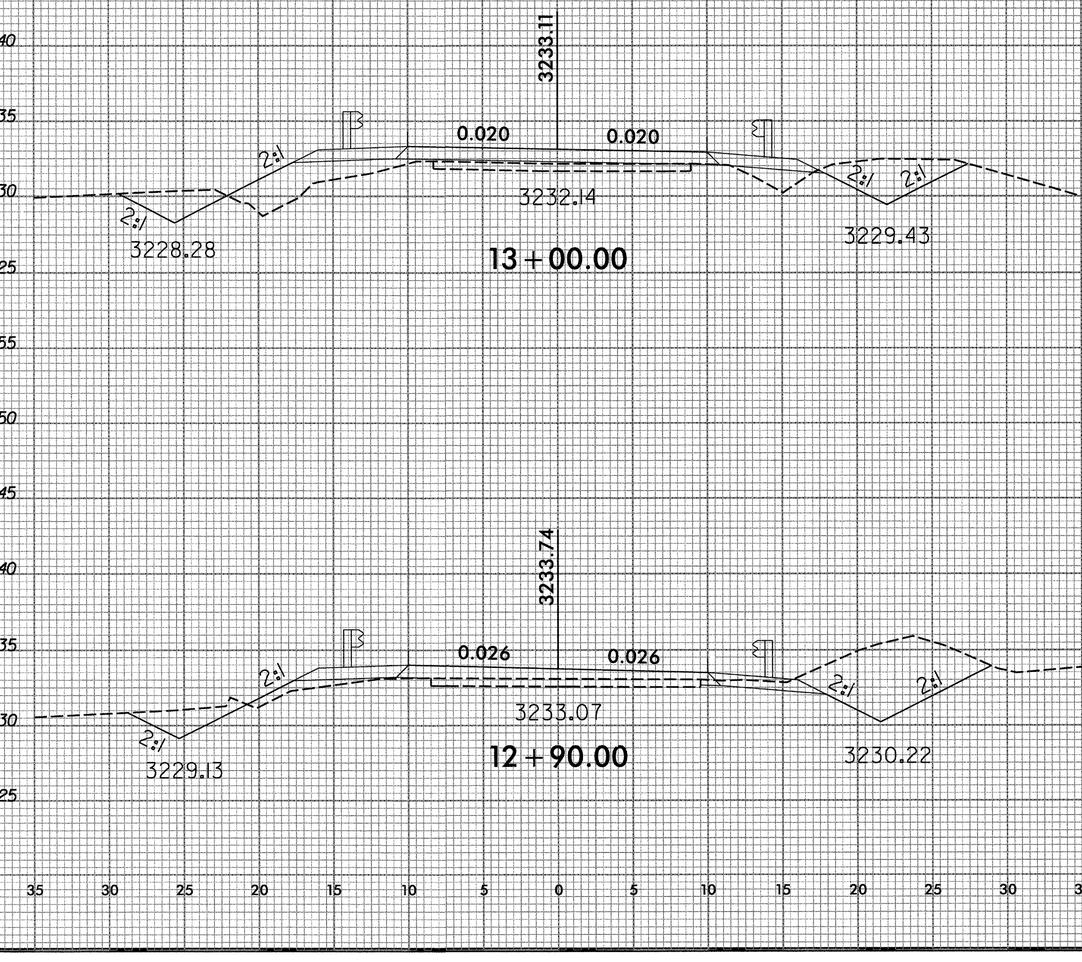

11:18:09 AM
G:\DR Projects\DR1100 - NCDOT Group W\430350\Roadway\XSC\430350_RDY_XPL_002-007_L.dgn
willett

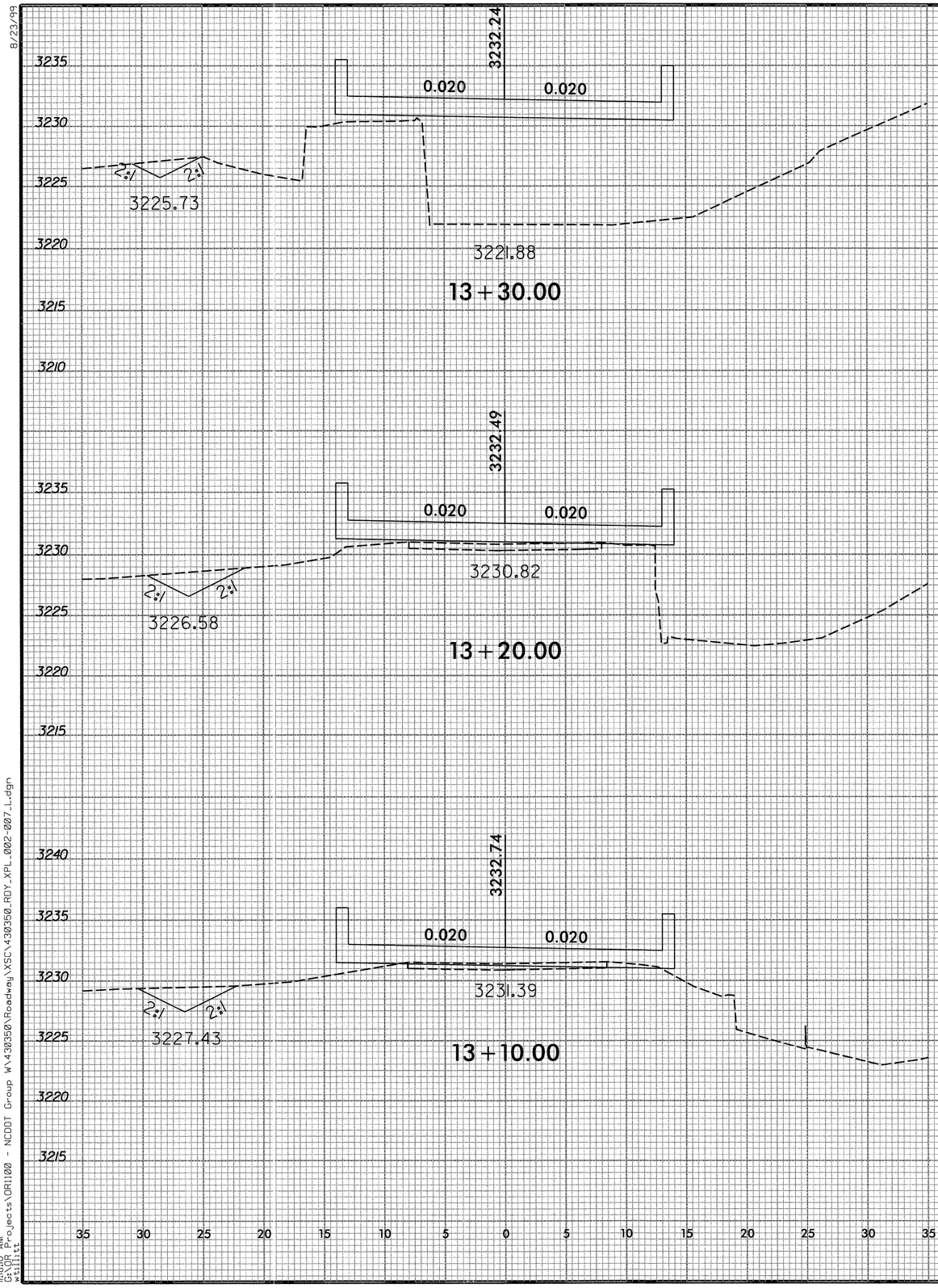

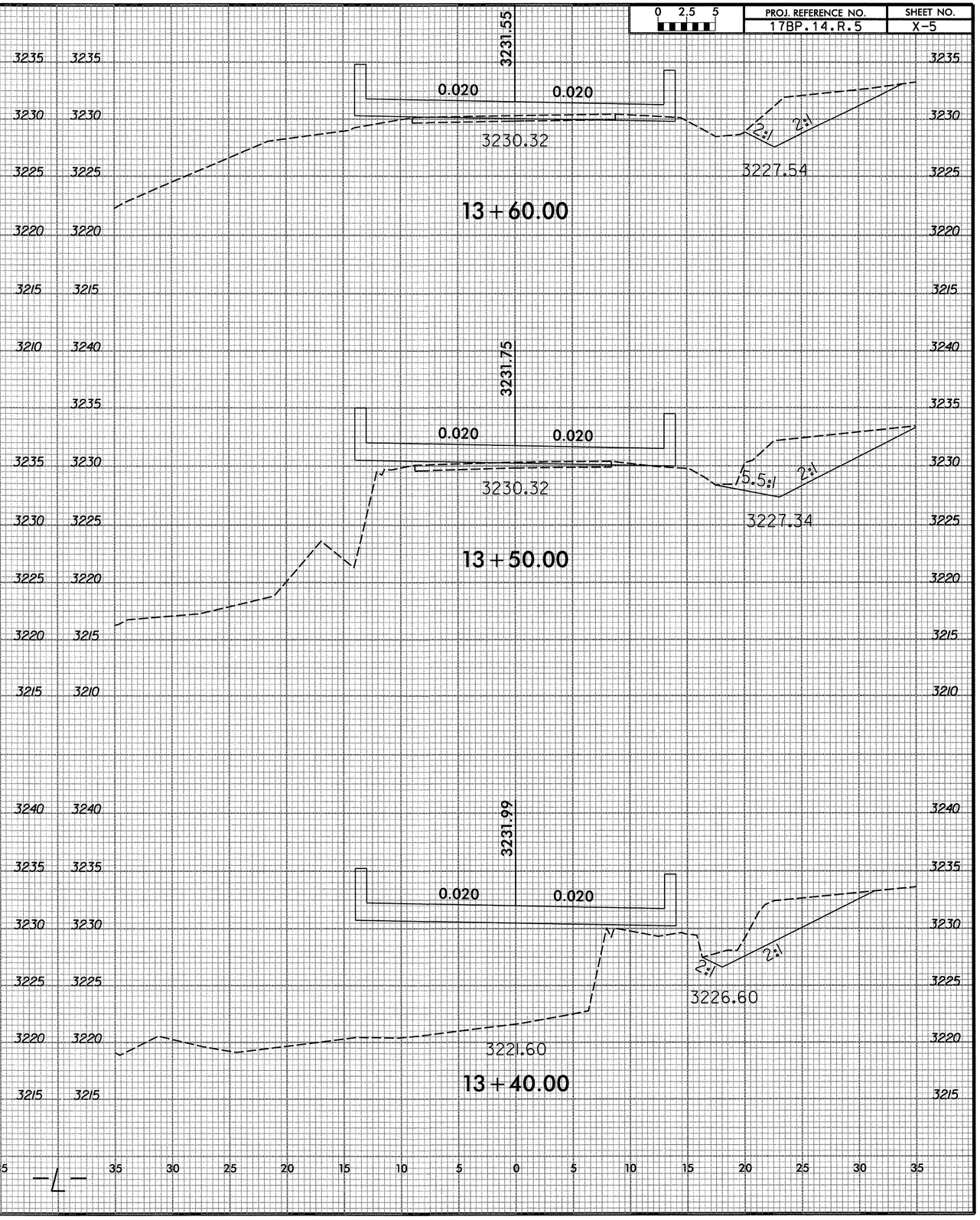

8/23/99
11:18:10 AM
G:\DR_Projects\DR1100 - NCDOT Group W\430350\Roadway\XSC\430350_RDY_XPL_002-007_L.dgn
willitt

8/23/99

0 2.5 5	PROJ. REFERENCE NO.	SHEET NO.
	17BP.14.R.5	X-6

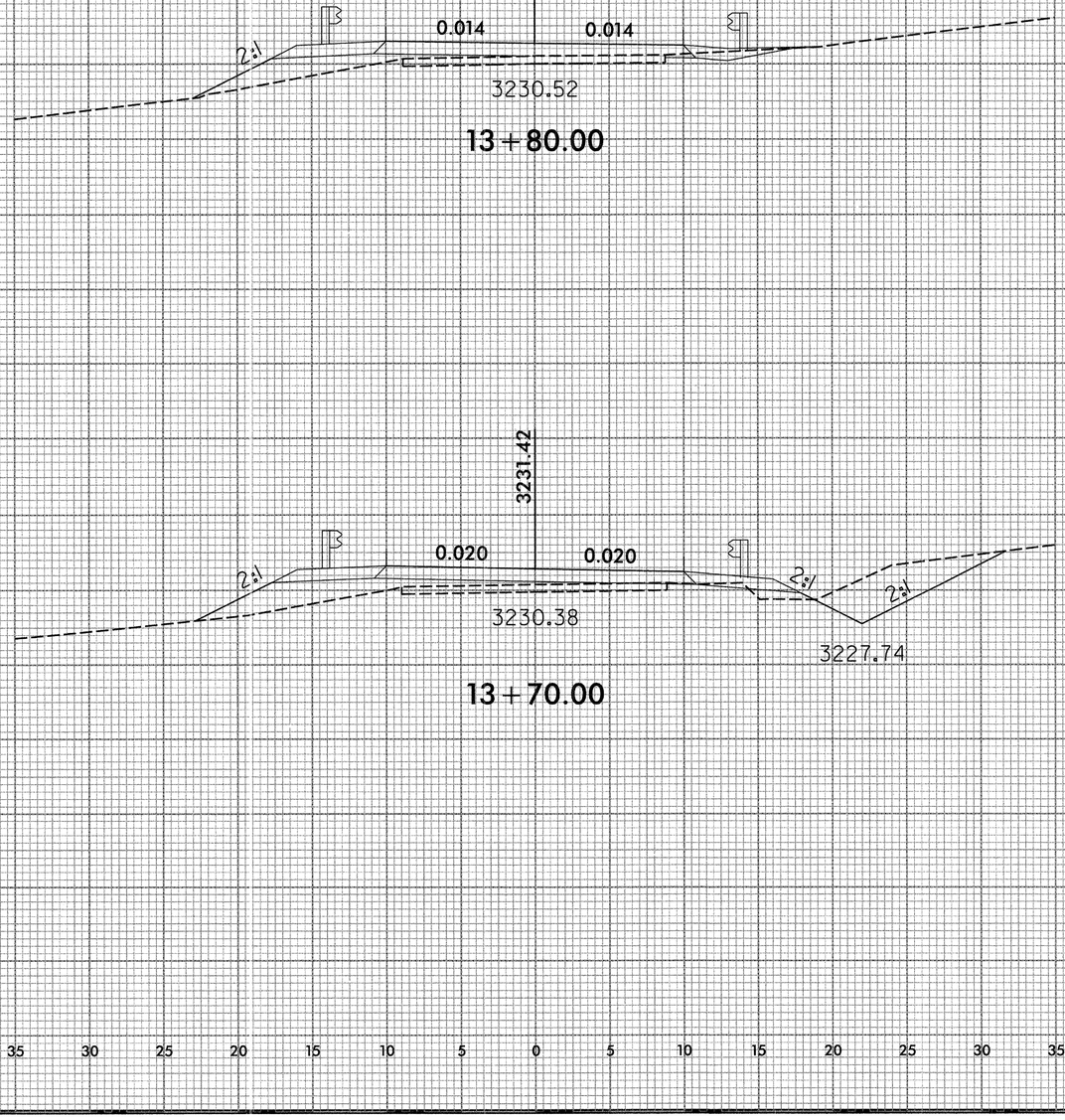

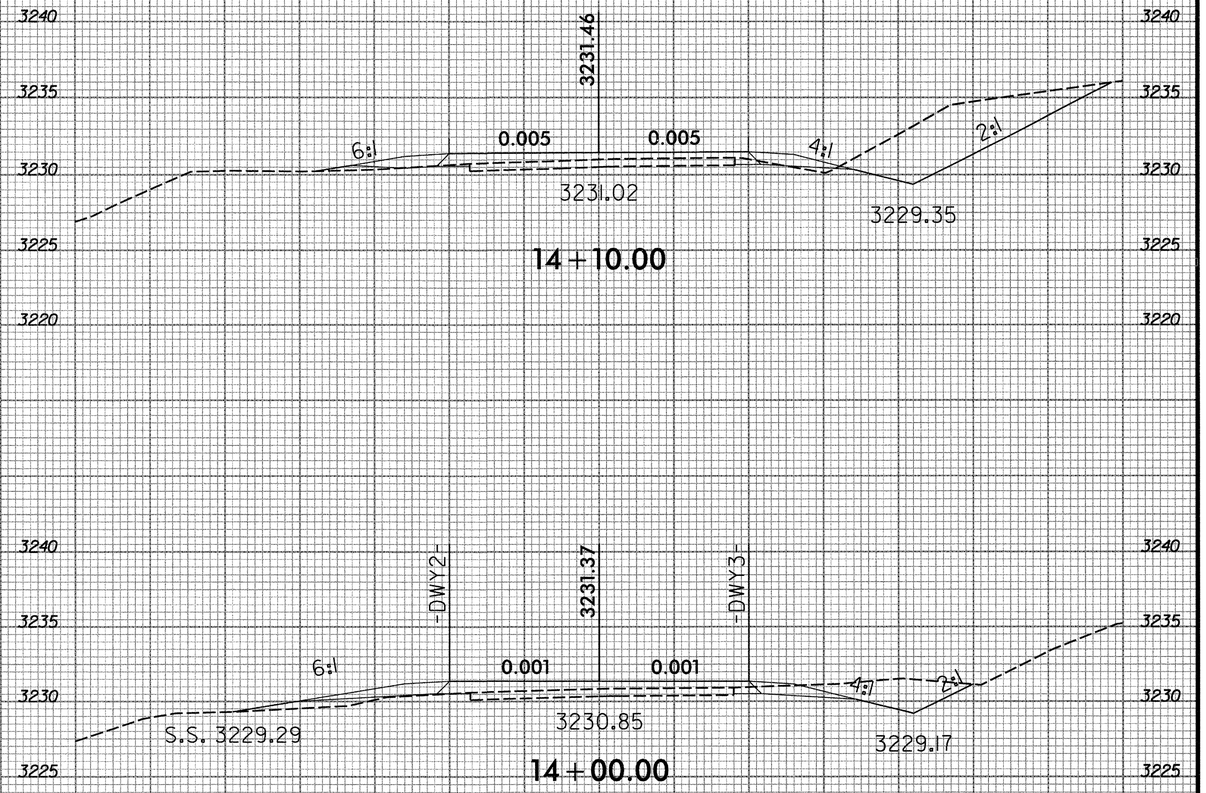

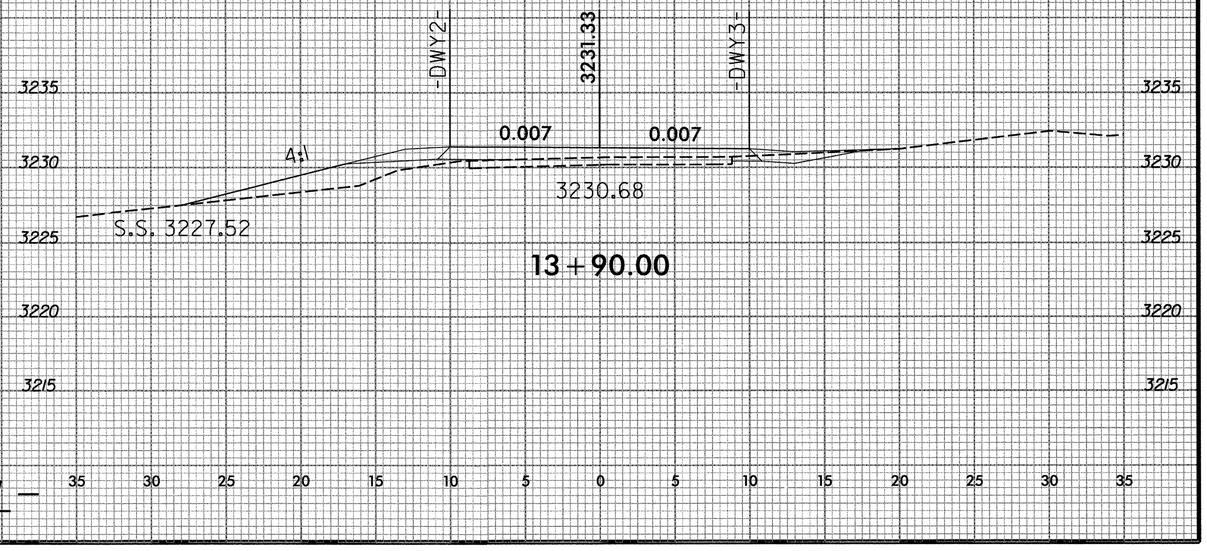

11:18:10 AM
G:\DR_Projects\DR1100 - NCDOT Group W\430350\Roadway\XSC\430350_RDY_XPL_002-007_L.dgn
williams

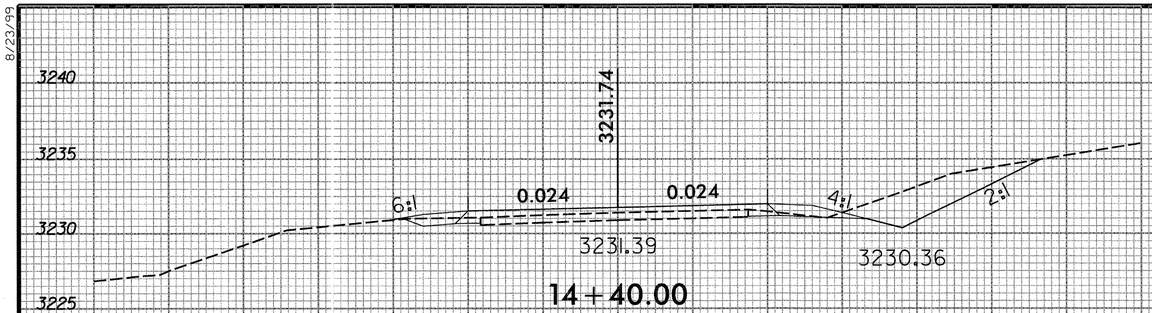

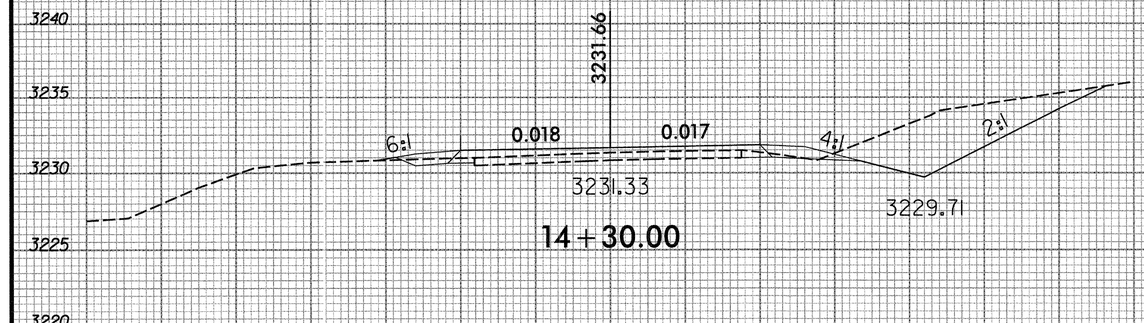

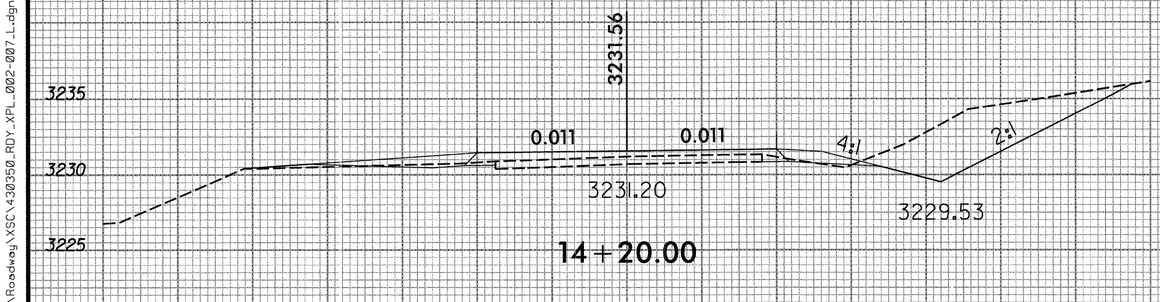

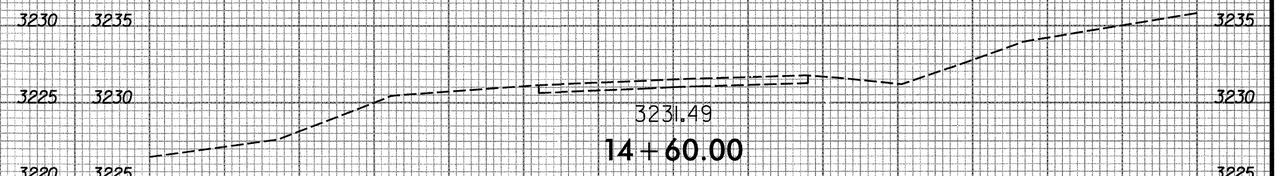

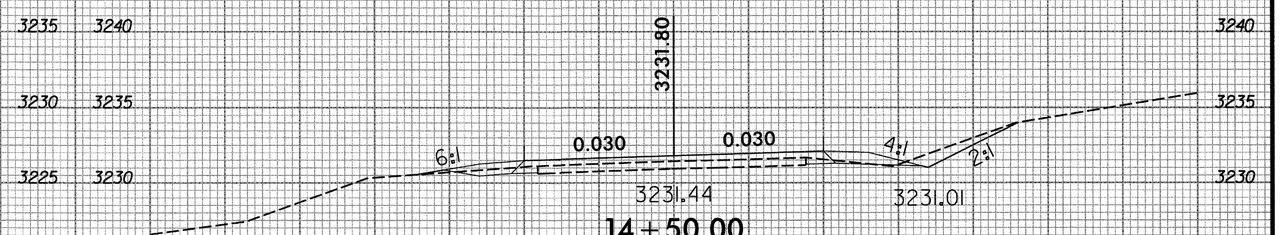

11:8:10 AM
G:\DR_Projects\DR1100 - NCDOT Group W\430350\Roadway\XSC\430350_RDY_XPL_002-007_L.dgn
willitt

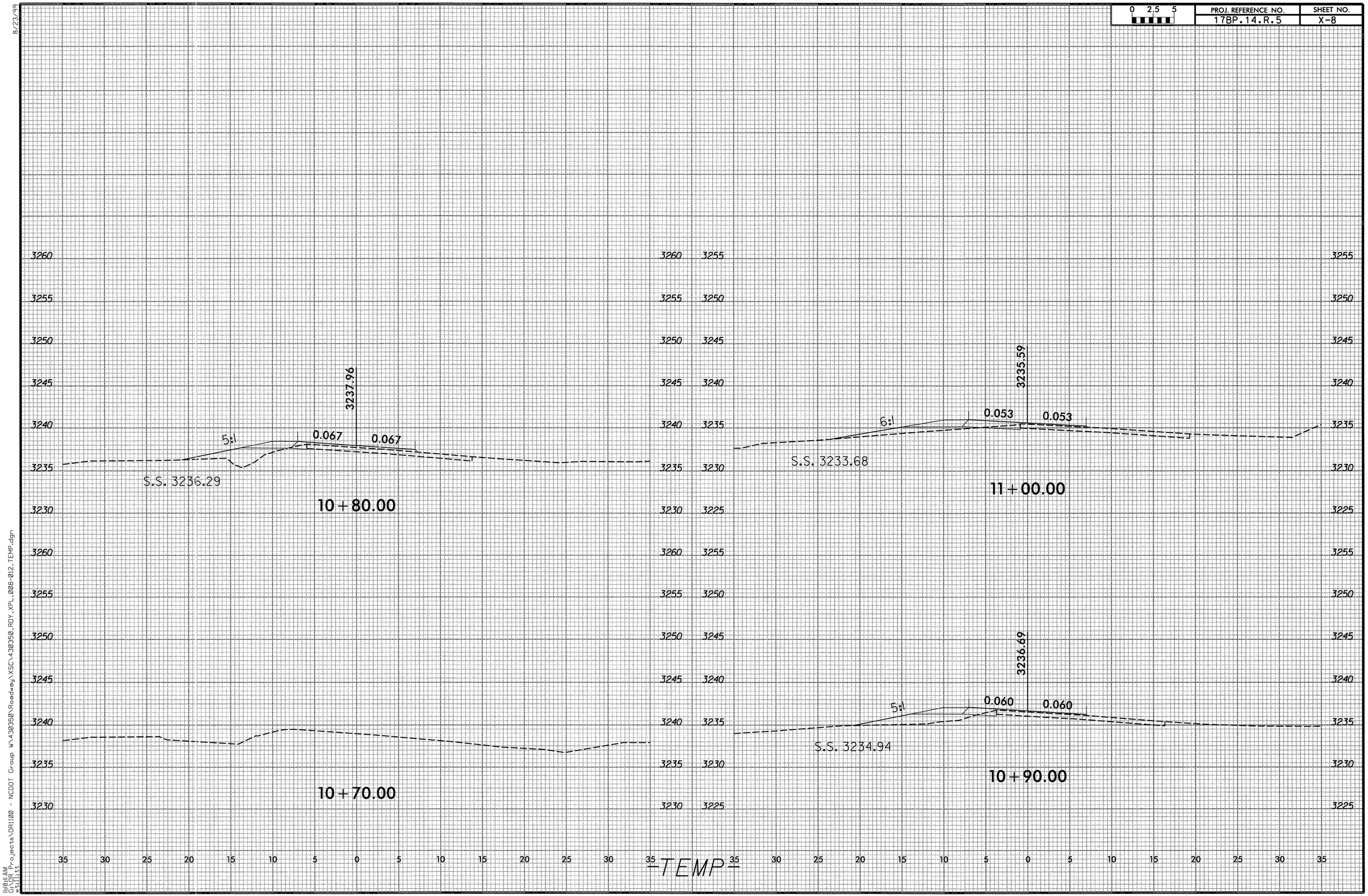

0 2.5 5
PROJ. REFERENCE NO.
17BP.14.R.5
SHEET NO.
X-8
3237.96
5:1
0.067
0.067
S.S. 3236.29
10+80.00
3235.59
6:1
0.053
0.053
S.S. 3233.68
11+00.00
3236.69
5:1
0.060
0.060
S.S. 3234.94
10+90.00
10+70.00
TEMP

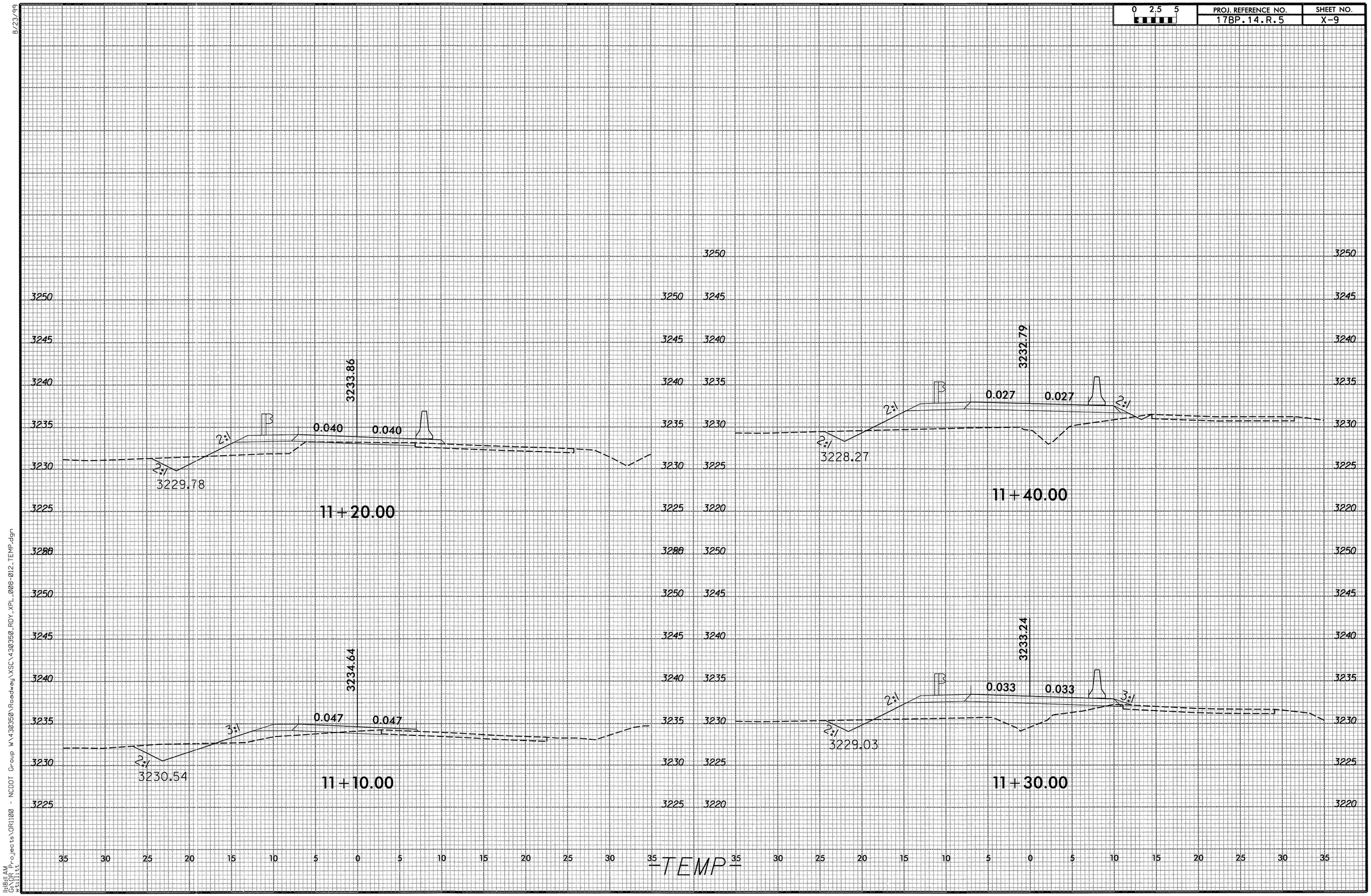

0 2.5 5
PROJ. REFERENCE NO.
17BP.14.R.5
SHEET NO.
X-9
11+20.00
3233.86
0.040
0.040
2:1
2:1
3229.78
11+10.00
3234.64
0.047
0.047
3:1
2:1
3230.54
11+40.00
3232.79
0.027
0.027
2:1
2:1
2:1
3228.27
11+30.00
3233.24
0.033
0.033
2:1
2:1
3:1
3229.03
3250
3245
3240
3235
3230
3225
3220
35 30 25 20 15 10 5 0 5 10 15 20 25 30 35
TEMP
8/23/99
11:18:11 AM
G:\OR Projects\OR1100 - NCDOT Group W\430350\Roadway\XSC\430350_RDY_XPL_008-012_TEMP.dgn
wtillitt

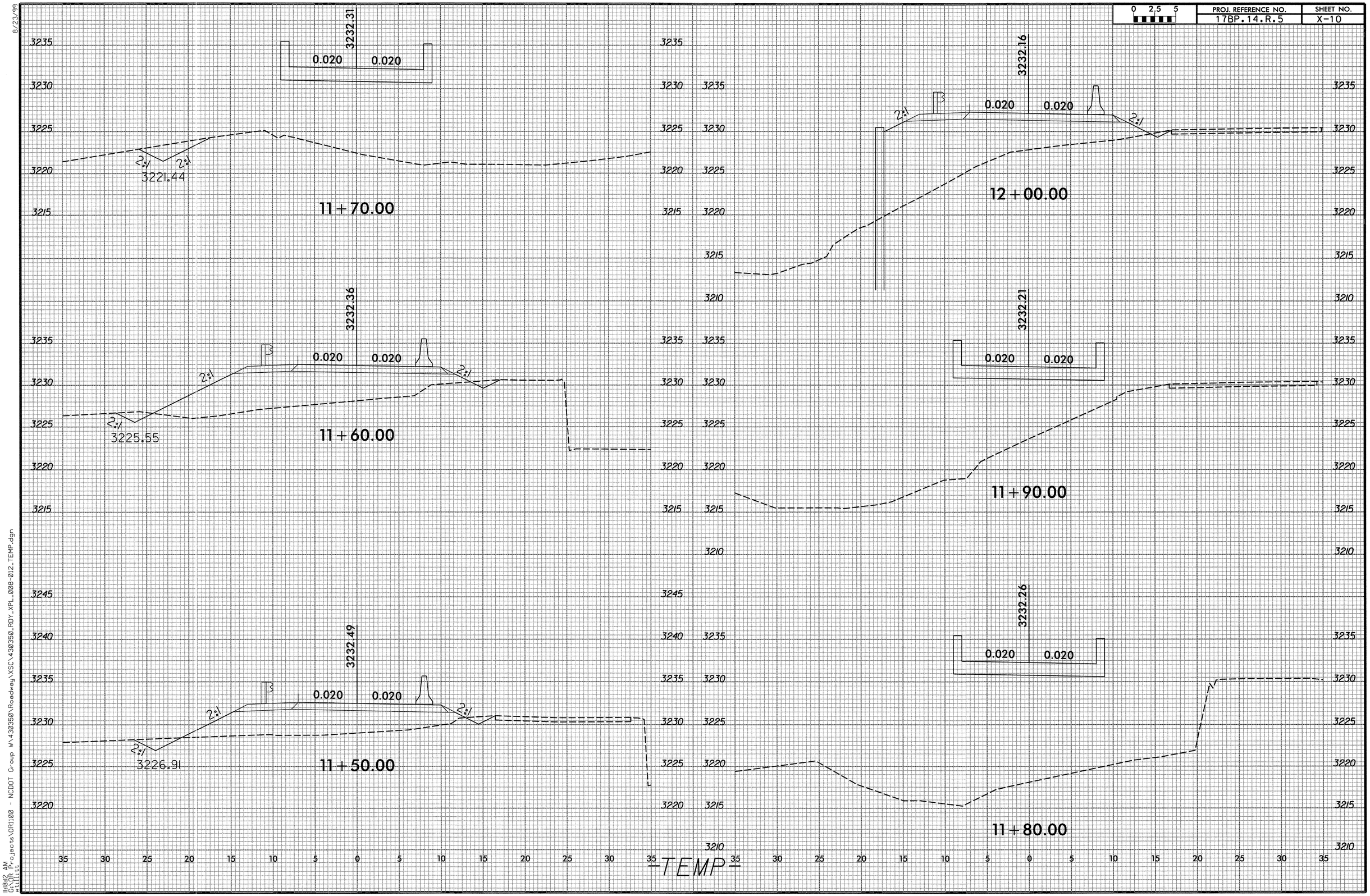

8/23/99

11:18:12 AM
G:\DR Projects\DR1100 - NCDOT Group W\430350\Roadway\XSC\430350_RDY_XPL_008-012_TEMP.dgn
wtillitt

8/23/99

0 2.5 5	PROJ. REFERENCE NO.	SHEET NO.
	17BP.14.R.5	X-11

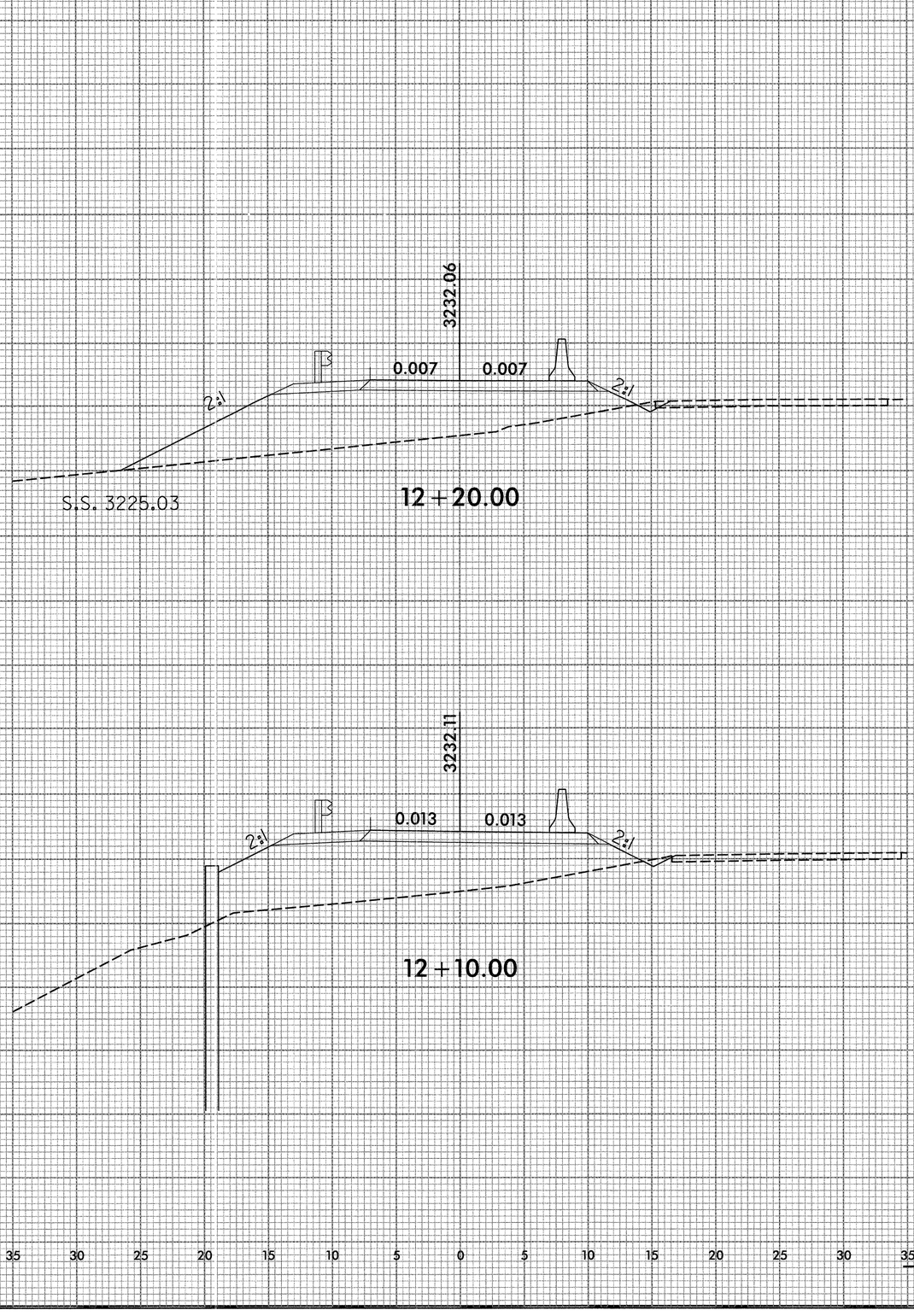

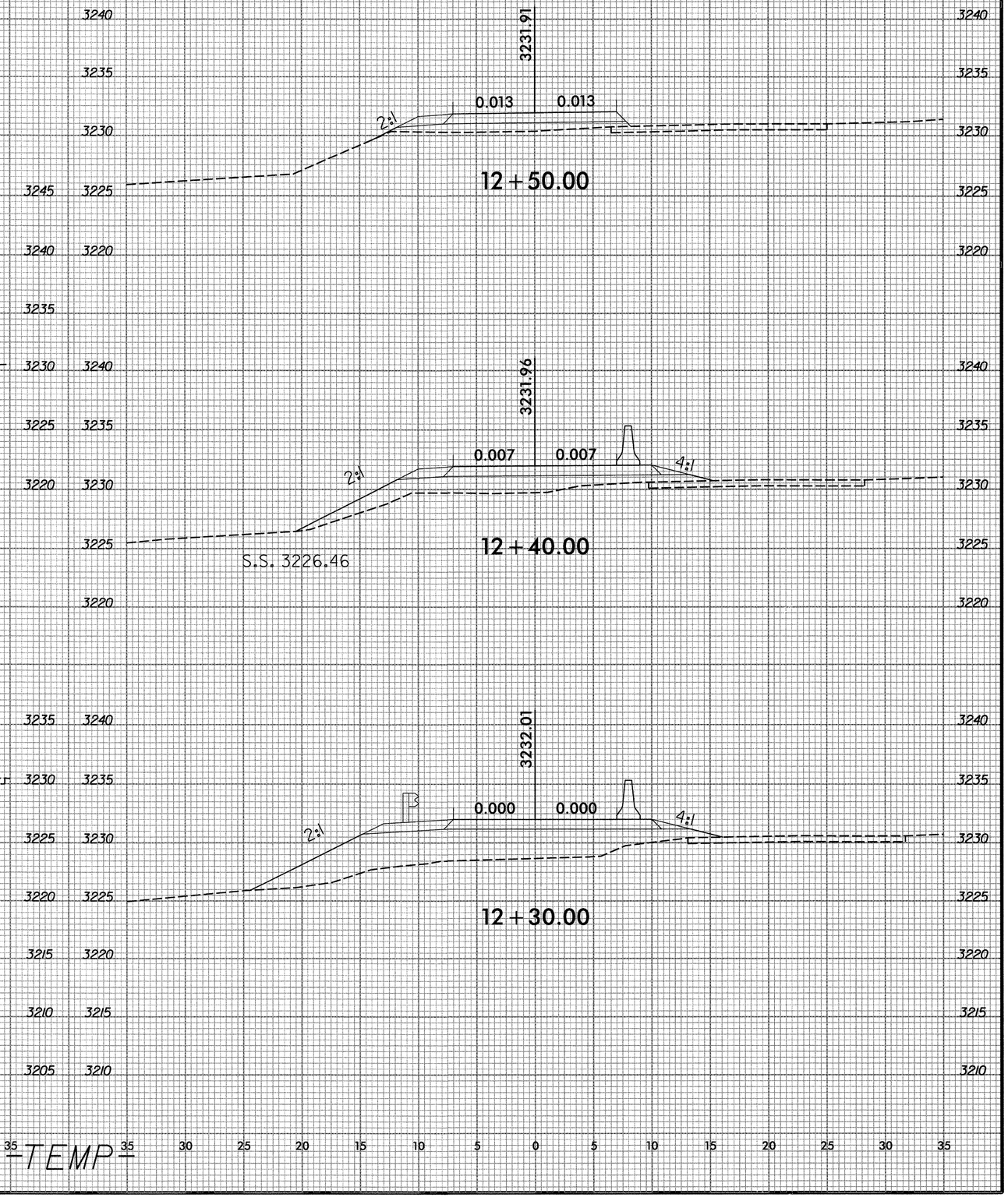

-TEMP-

11:8:12 AM
G:\DR Projects\DR1100 - NCDOT Group W\430350\Roadway\XSC\430350_RDY_XPL_008-012_TEMP.dgn
wellis

8/23/99

0 2,5 5	PROJ. REFERENCE NO.	SHEET NO.
	17BP.14.R.5	X-12

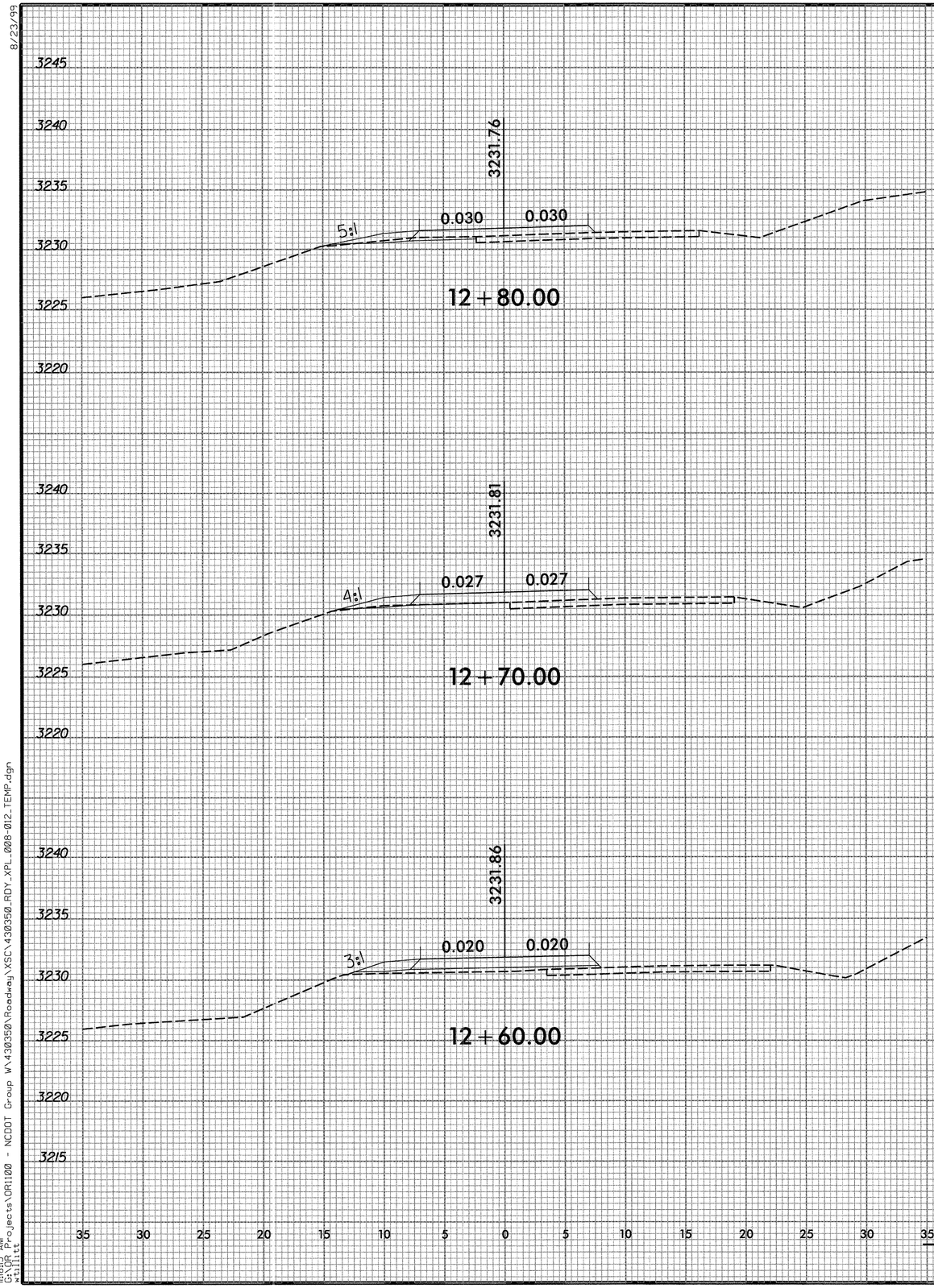

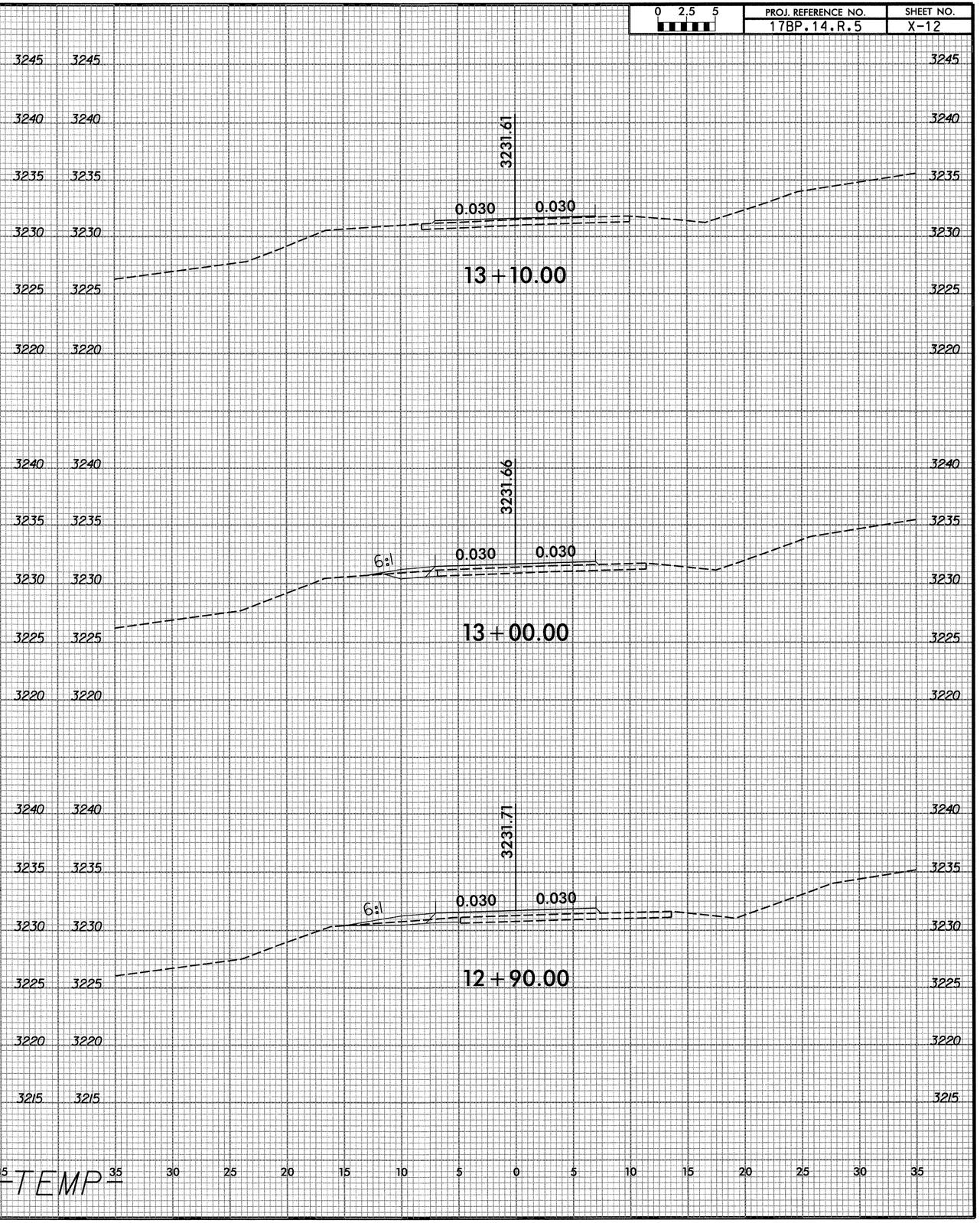

35 30 25 20 15 10 5 0 5 10 15 20 25 30 35 35 30 25 20 15 10 5 0 5 10 15 20 25 30 35

-TEMP-

11:18:13 AM
G:\DR_Projects\DR1100 - NCDOT Group W\430350\Roadway\XSC\430350_RDY_XPL_008-012_TEMP.dgn
wstillitt

PROJ. REFERENCE NO.	SHEET NO.
17BP.14.R.5	X-13

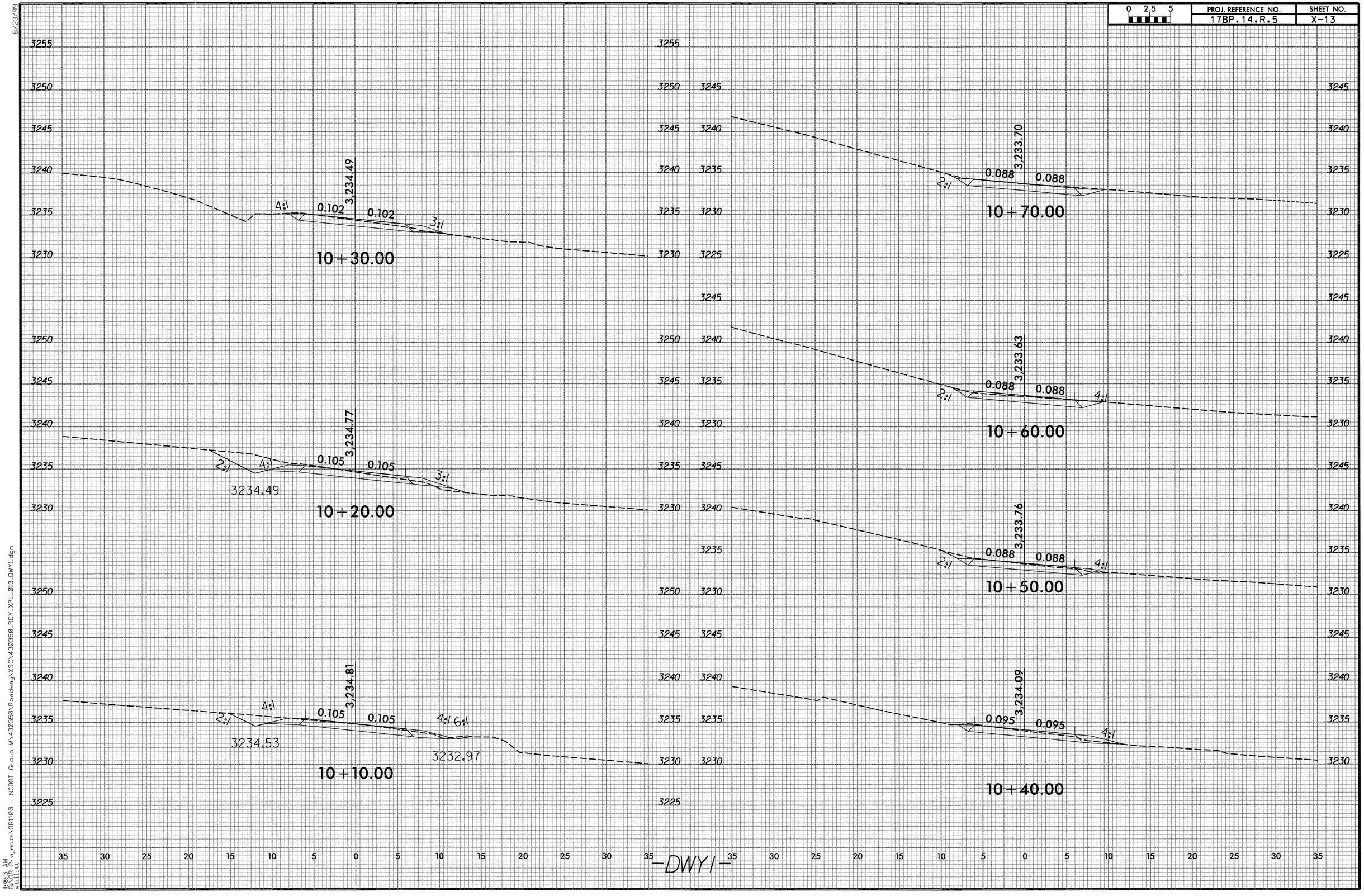

8/23/99

11:18:13 AM
G:\OR Projects\OR1100 - NCDOT Group W\430350\Roadway\XSC\430350_RDY_XPL_013_DWY1.dgn
wtillitt

8/23/99

0 2.5 5	PROJ. REFERENCE NO.	SHEET NO.
	17BP.14.R.5	X-14

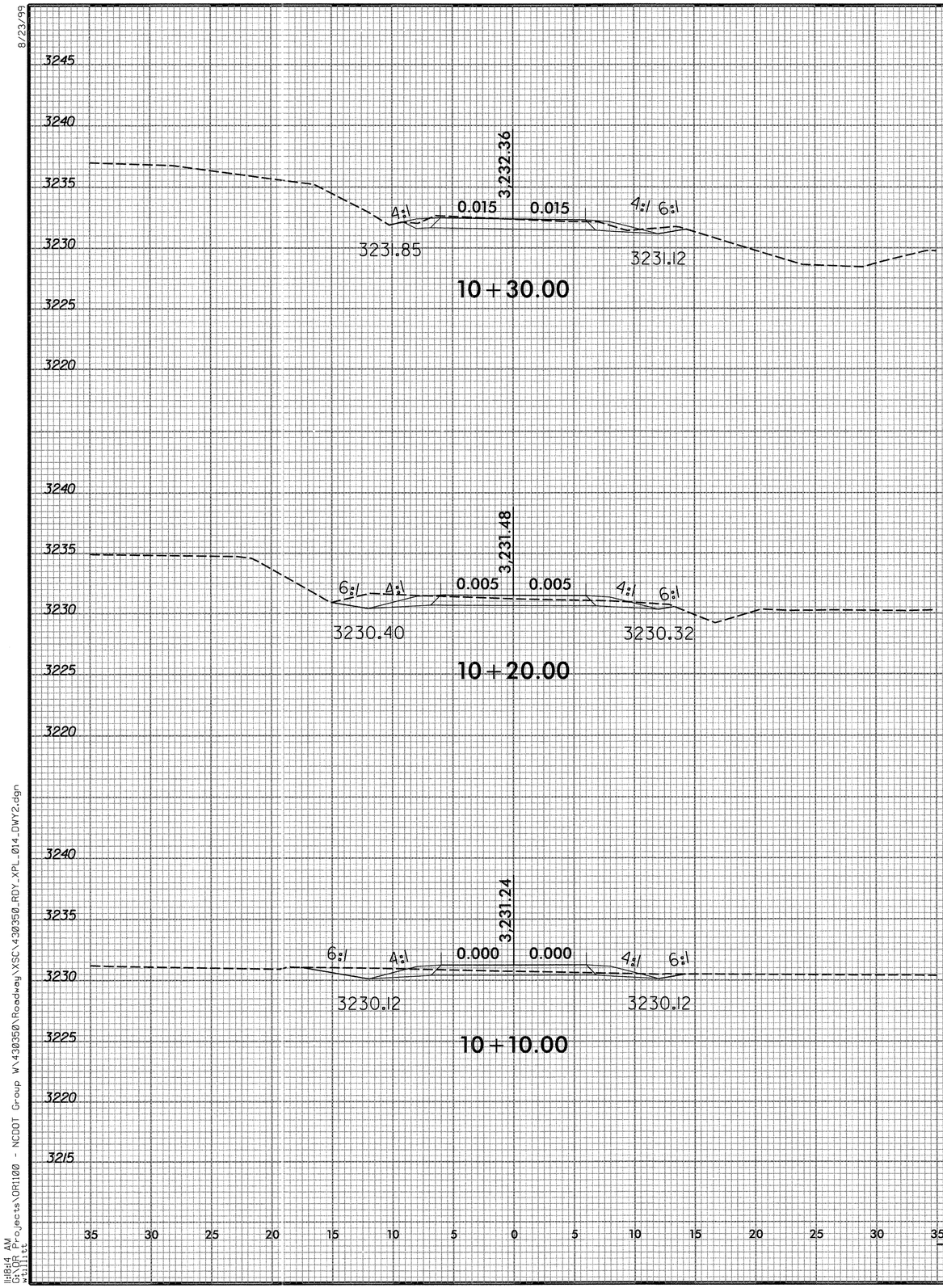

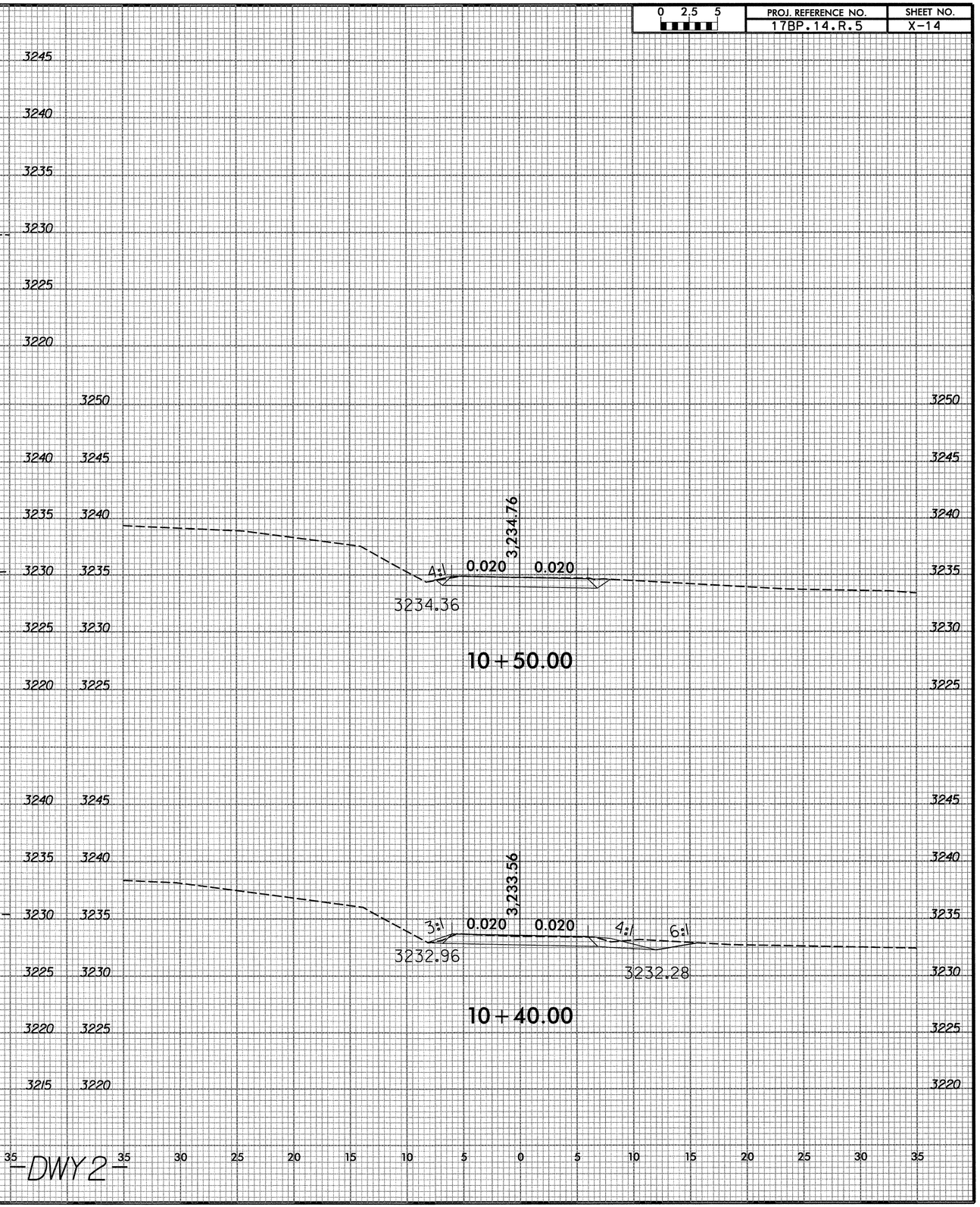

11:18:14 AM
G:\DR_Projects\DR1100 - NCDOT Group W\430350\Roadway\XSC\430350_RDY_XPL_014_DWY2.dgn
williams

8/23/99

0 2.5 5	PROJ. REFERENCE NO.	SHEET NO.
	17BP.14.R.5	X-15

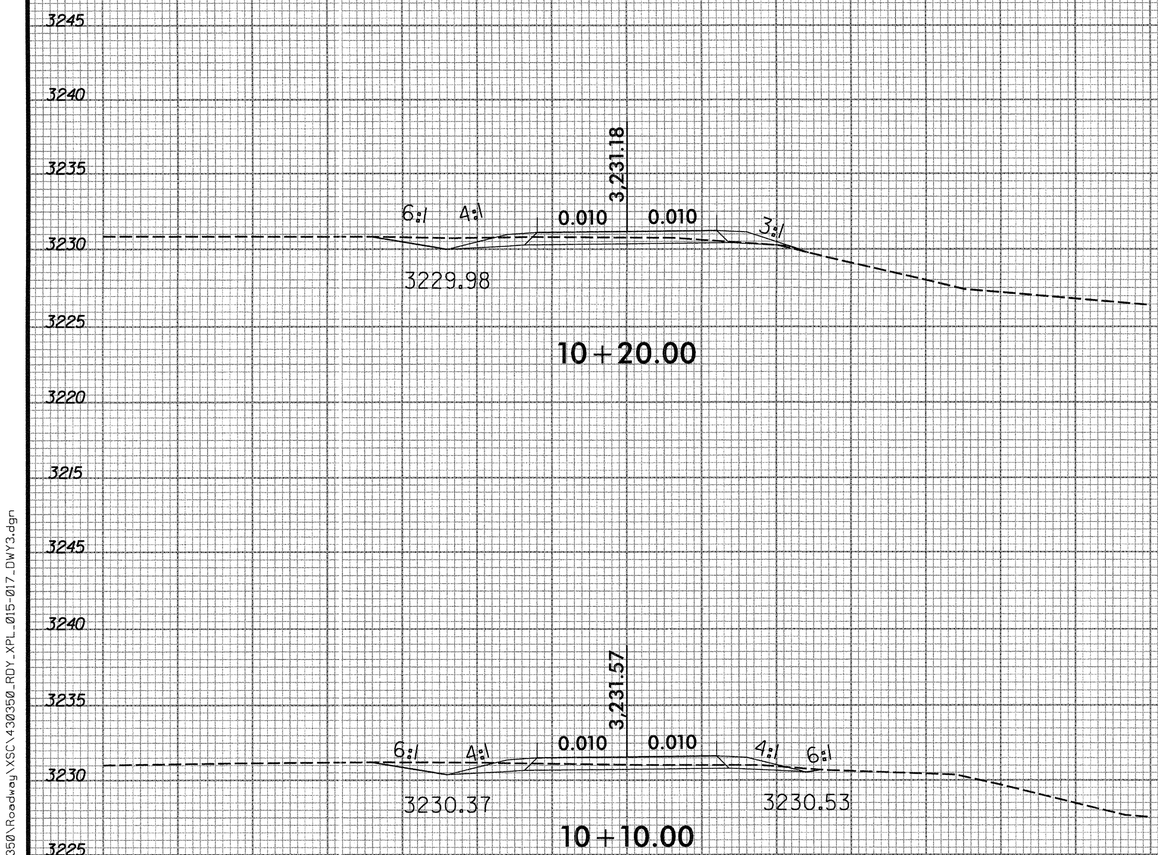

10+20.00

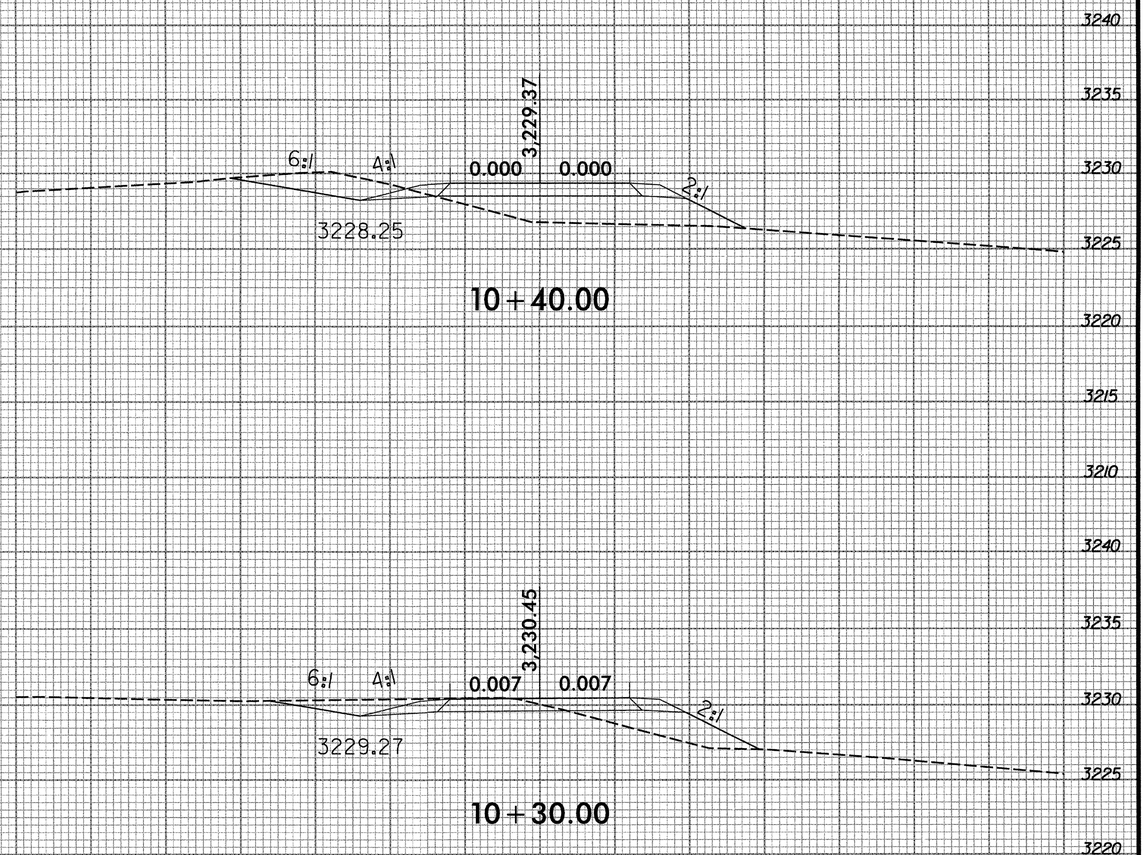

10+40.00

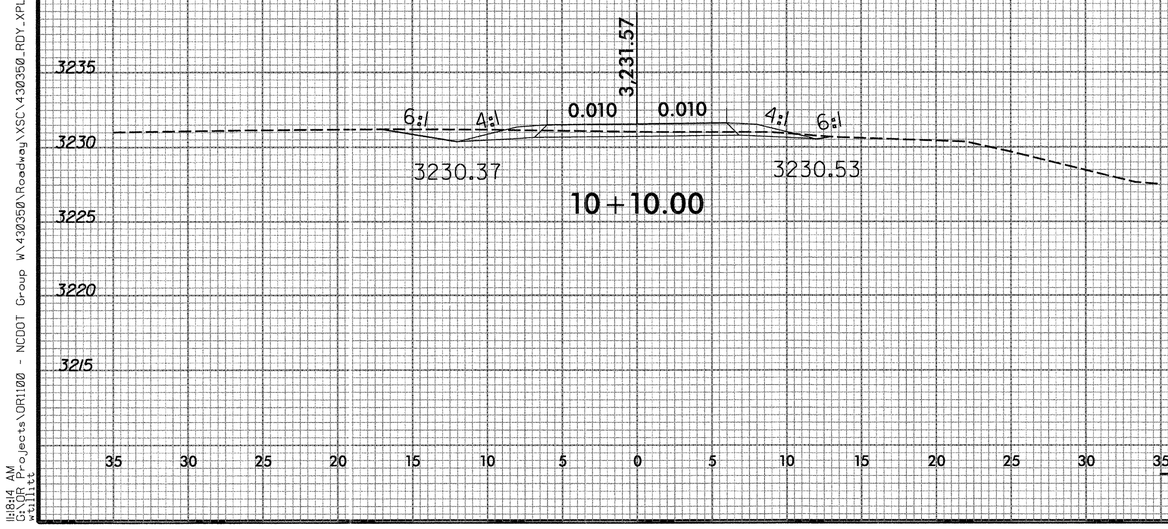

10+10.00

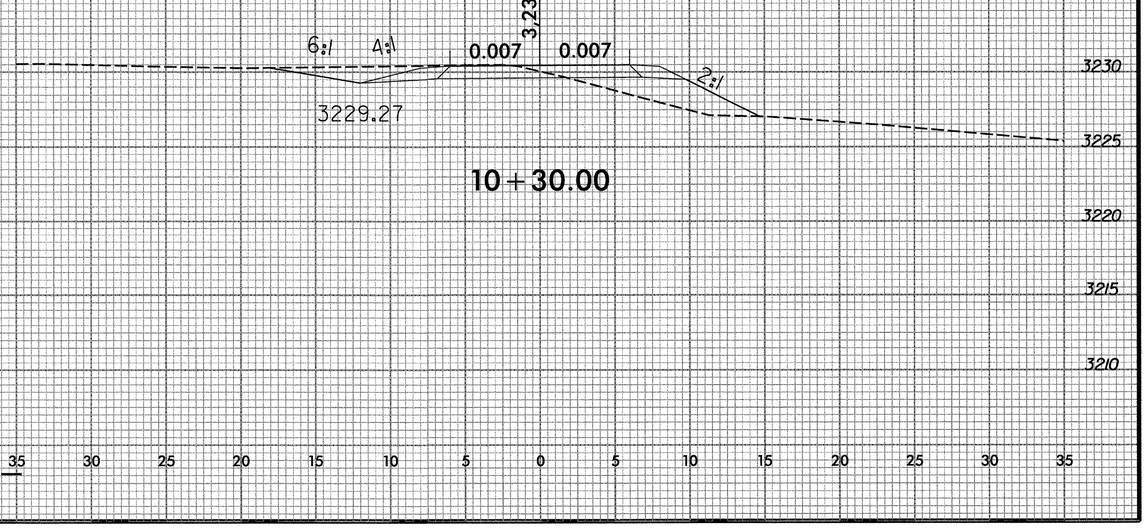

10+30.00

11:8:14 AM
G:\DR Projects\DR1100 - NCDOT Group W\430350\Roadway\XSC\430350_RDY_XPL_015-017_DWY3.dgn
willitt

8/23/99

0 2.5 5	PROJ. REFERENCE NO.	SHEET NO.
	17BP.14.R.5	X-16

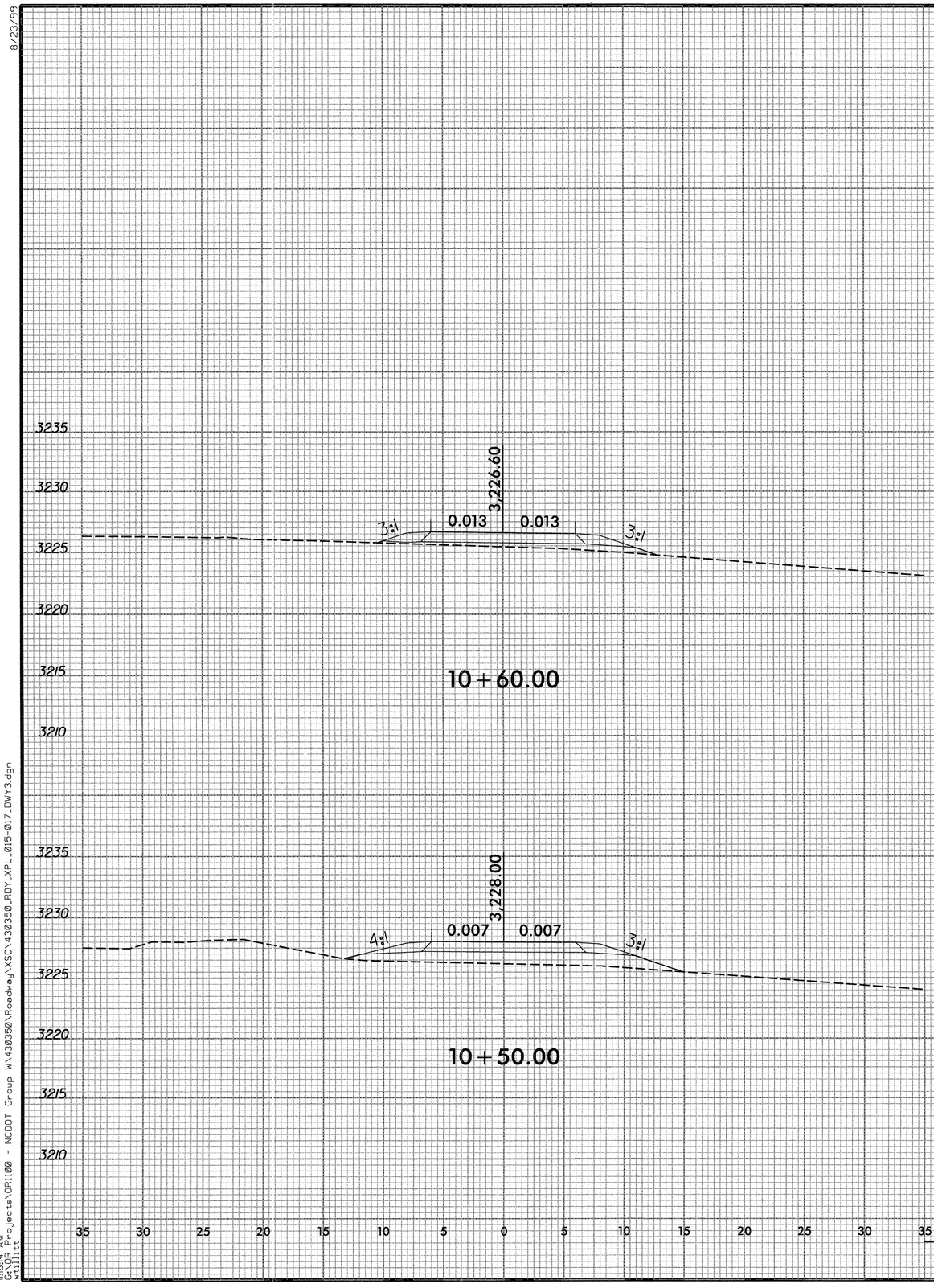

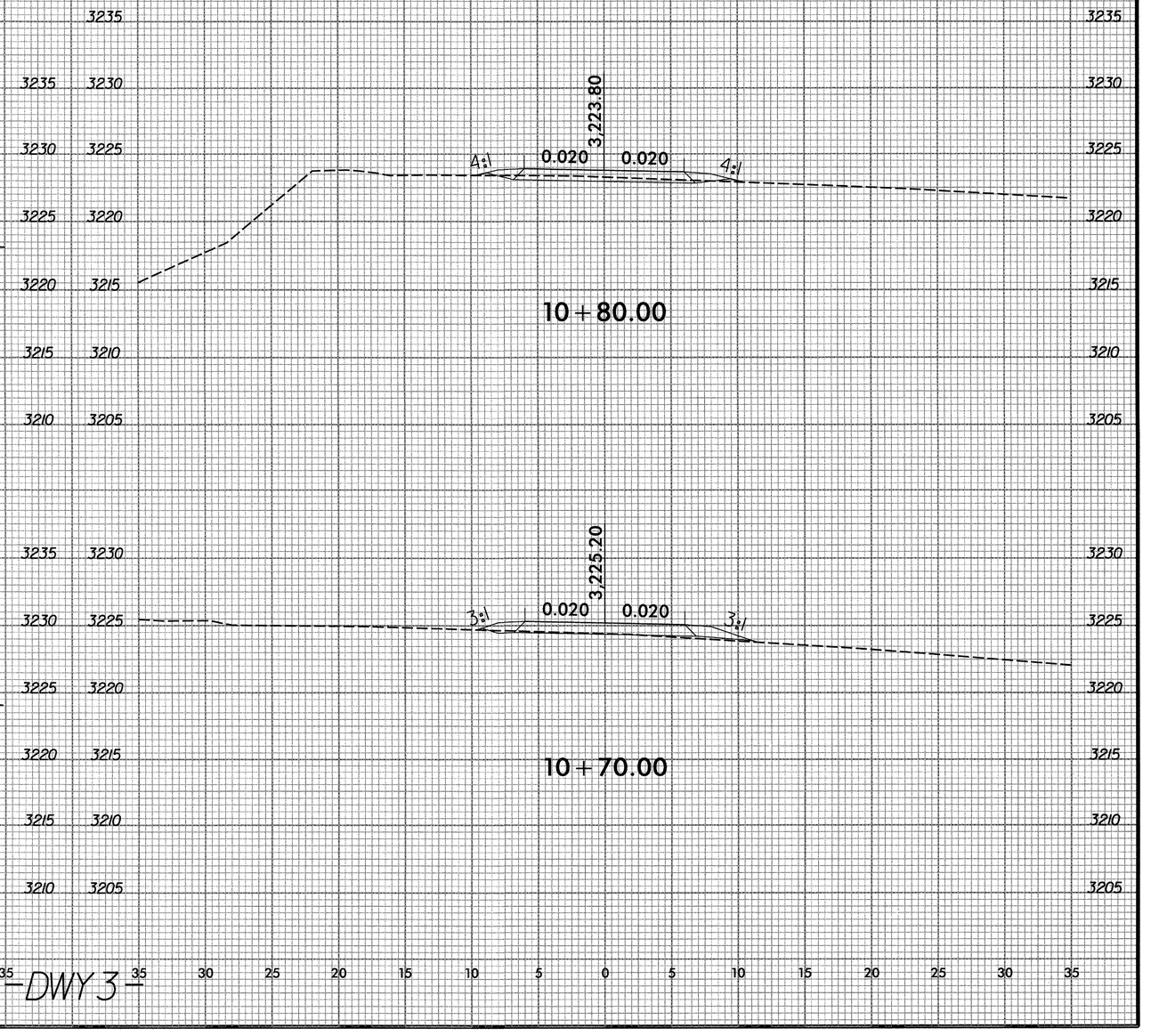

35 30 25 20 15 10 5 0 5 10 15 20 25 30 35

—DWY 3—

11:8:14 AM
G:\DR Projects\DR1100 - NCDOT Group W\430350\Roadway\XSC\430350_RDY_XPL_015-017_DWY3.dgn
mtillett

8/23/99

0 2.5 5	PROJ. REFERENCE NO.	SHEET NO.
	17BP.14.R.5	X-17

3225
3220
3215
3210

3,219.60

0.020 0.020

4:1

11+10.00

3,221.00

0.020 0.020

11+00.00

3,222.40

0.020 0.020

4:1 4:1

10+90.00

35 30 25 20 15 10 5 0 5 10 15 20 25 30 35

-DWY 3-

11:18:15 AM
G:\DOT Projects\ORI100 - NCDOT Group W\430350\Roadway\XSC\430350_RDY_XPL_015-017_DWY3.dgn
willis.tc

FOR NOTES, SEE SHEET S-4.

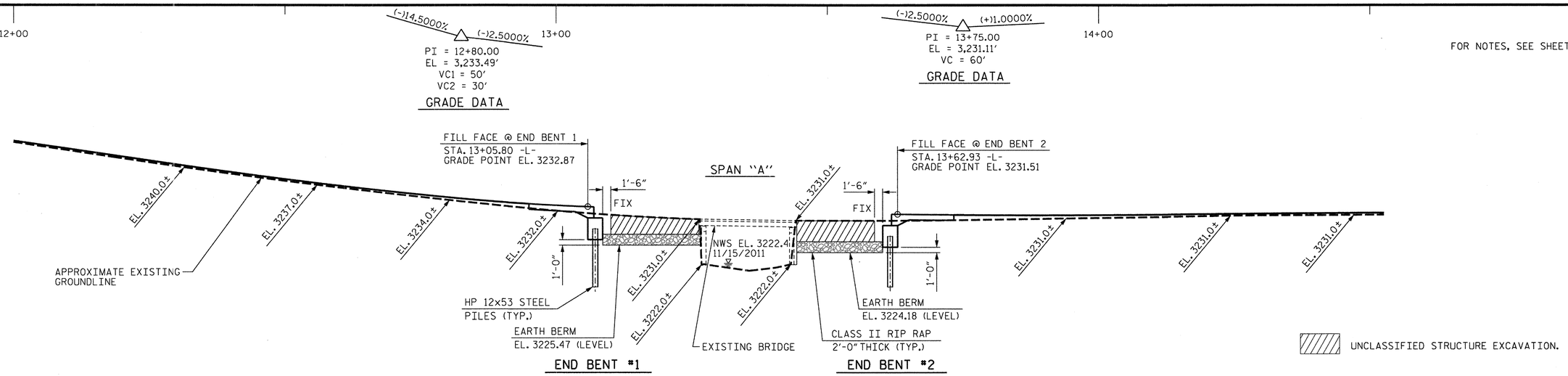

SECTION ALONG ℄ SURVEY -L-

SECTION AT END BENTS TAKEN AT RIGHT ANGLES

℄ SURVEY -L- HORIZONTAL CURVE DATA

PI STA. 12+29.80
△ = 35°29'45.0" (RT)
D = 31°21'50.1"
L = 113.17'
T = 58.47'
R = 182.68'

℄ SURVEY -L- HORIZONTAL CURVE DATA

PI STA. 13+80.79
△ = 12°34'57.4" (RT)
D = 14°24'05.1"
L = 87.37'
T = 43.86'
R = 397.85'

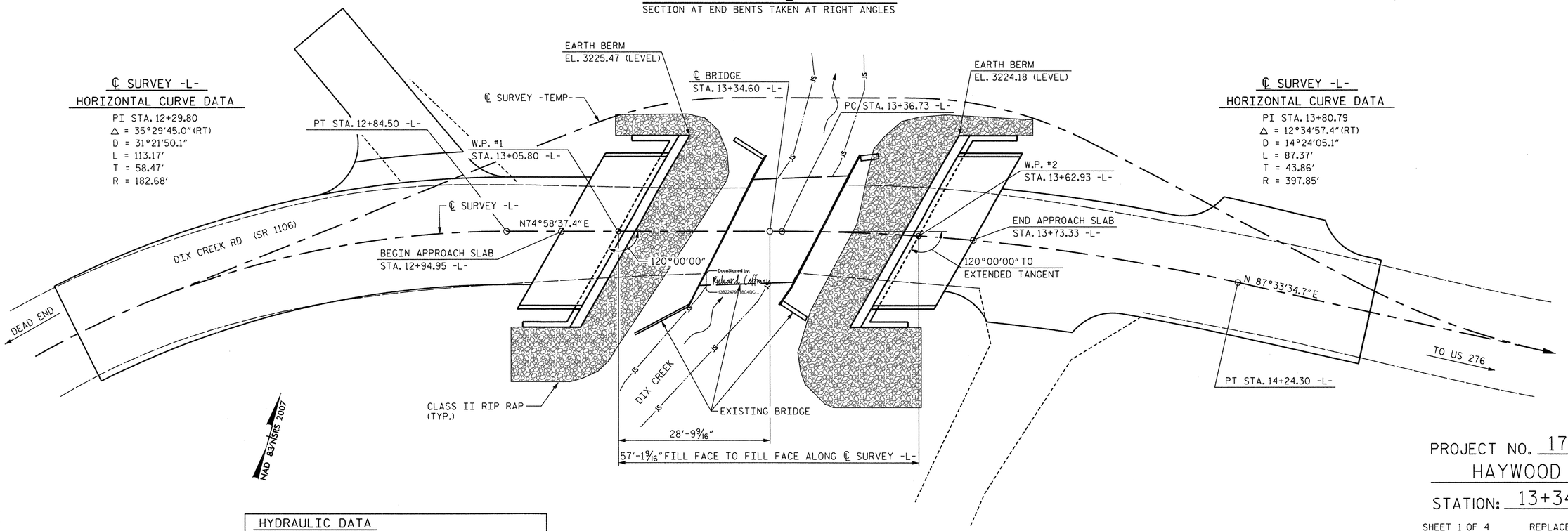

PLAN

HYDRAULIC DATA

DESIGN DISCHARGE	= 490 CFS
FREQUENCY OF DESIGN FLOOD	= 25 YEAR
DESIGN HIGH WATER ELEVATION	= 3229.2
DRAINAGE AREA	= 1.33 SQ. MI.
BASE DISCHARGE (Q100)	= 700 CFS
BASE HIGH WATER ELEATION	= 3230.0

OVERTOPPING FLOOD DATA

OVERTOPPING DISCHARGE	= 3300 CFS
FREQUENCY OF OVERTOPPING FLOOD	= >500 YEAR
OVERTOPPING FLOOD ELEVATION	= 3235.4

DRAWN BY: R. KNIGHT DATE : AUG 2013
CHECKED BY: R. COFFMAN DATE : AUG 2013
DESIGN ENGINEER OF RECORD: R. COFFMAN DATE : NOV 2013

PROJECT NO. 17BP.14.R.5
HAYWOOD COUNTY
STATION: 13+34.60 -L-

SHEET 1 OF 4 REPLACES BRIDGE No. 430350

NORTH CAROLINA PROFESSIONAL SEAL 29112 ENGINEER RICHARD L. COFFMAN
DocuSigned by: Richard Coffman 8/4/2015

THE LOUIS BERGER GROUP, Inc.
1001 Wade Avenue, Suite 400
Raleigh, NC 27605-3322
NC COA No. F-0840

STATE OF NORTH CAROLINA
DEPARTMENT OF TRANSPORTATION
RALEIGH

GENERAL DRAWING FOR BRIDGE ON SR 1106 OVER DIX CREEK BETWEEN US 276 AND DEAD END

REVISIONS						SHEET NO.
NO.	BY:	DATE:	NO.	BY:	DATE:	S-1
1			3			TOTAL SHEETS
2			4			20

G:\OR Projects\OR1100 - NCDOT Group W\430350\Structures\430350_SD_GD01.DGN
1100_PDF_full.pltcfg 1100_str.tbl
8/4/2015

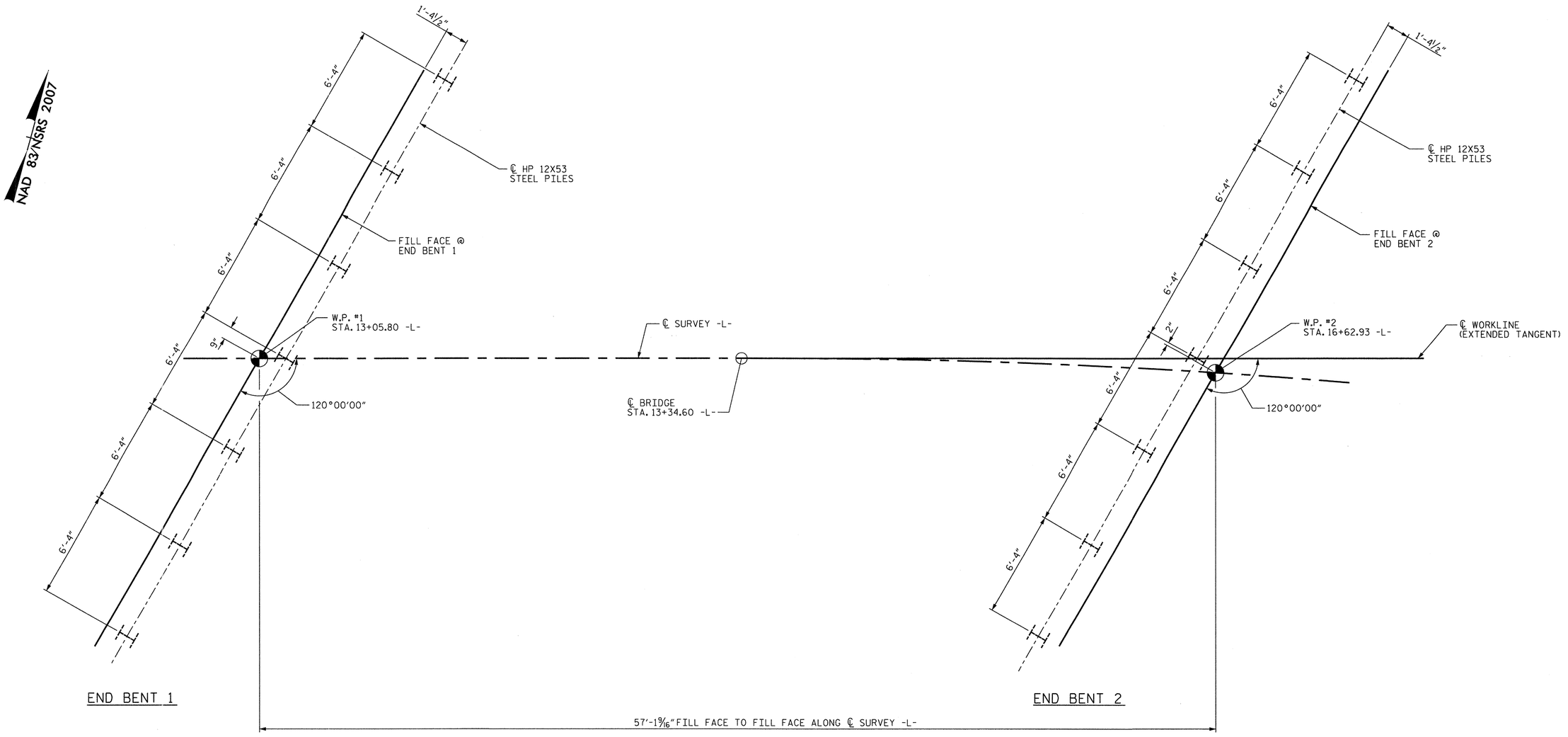

FOUNATION LAYOUT

FOUNDATION NOTES:

PILES AT END BENT 1 ARE DESIGNED FOR A FACTORED RESISTANCE OF 71 TONS PER PILE.

DRIVE PILES AT END BENT 1 TO A REQUIRED DRIVING RESISTANCE OF 118 TONS PER PILE.

PILES AT END BENT 2 ARE DESIGNED FOR A FACTORED RESISTANCE OF 71 TONS PER PILE.

DRIVE PILES AT END BENT 2 TO A REQUIRED DRIVING RESISTANCE OF 118 TONS PER PILE.

STEEL H PILE POINTS ARE REQUIRED FOR H PILES AT END BENTS 1 & 2. FOR STEEL PILE POINTS, SEE SECTION 450 OF THE STANDARD SPECIFICATION.

FOR PILES, SEE SECTION 450 OF THE STANDARD SPECIFICATION.

PROJECT NO. 17BP.14.R.5

HAYWOOD COUNTY

STATION: 13+34.60 -L-

SHEET 2 OF 4

NORTH CAROLINA PROFESSIONAL SEAL 29112 ENGINEER RICHARD L. COFFMAN

DocuSigned by: Richard Coffman 8/4/2015

THE LOUIS BERGER GROUP, Inc.
1001 Wade Avenue, Suite 400
Raleigh, NC 27605-3322
NC COA No. F-0840

STATE OF NORTH CAROLINA
DEPARTMENT OF TRANSPORTATION
RALEIGH

GENERAL DRAWING FOR BRIDGE ON SR 1106 OVER DIX CREEK BETWEEN US 276 AND DEAD END

REVISIONS						SHEET NO.
NO.	BY:	DATE:	NO.	BY:	DATE:	S-2
1			3			TOTAL SHEETS
2			4			20

DRAWN BY:	M. HOGAN	DATE : AUG 2013
CHECKED BY:	R. COFFMAN	DATE : AUG 2013
DESIGN ENGINEER OF RECORD:	R. COFFMAN	DATE : NOV 2013

G:\OR Projects\OR1100 - NCDOT Group W\430350\Structures\430350_SD_GD02.DGN
1100_PDF_full.pltcfg 1100_str.tbl
8/4/2015

NAD 83/NSRS 2007

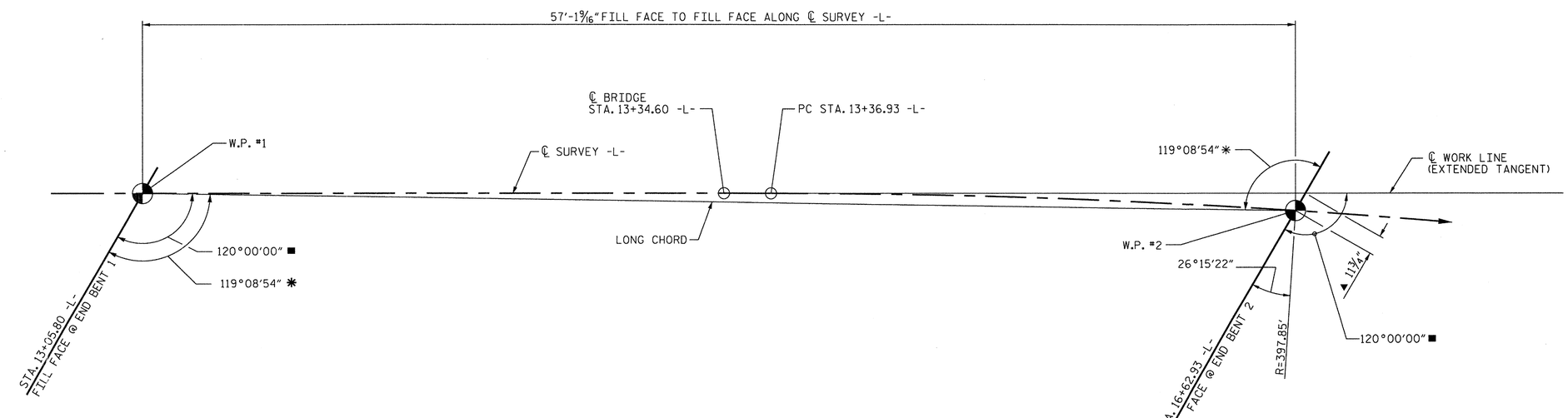

LONG CHORD LAYOUT

- ■ TO WORKLINE
- ✱ TO LONG CHORD
- ▲ ALONG FILL FACE

HORIZONTAL CURVE DATA

PI STA. = 13+80.79
△ = 12°34'57.4"(RT)
D = 14°24'05.1"
L = 87.37'
T = 43.86'
R = 397.85'

PROJECT NO. 17BP.14.R.5
HAYWOOD COUNTY
STATION: 13+34.60 -L-

SHEET 3 OF 4

DRAWN BY: R. KNIGHT	DATE : NOV 2013
CHECKED BY: R. COFFMAN	DATE : NOV 2013
DESIGN ENGINEER OF RECORD: R. COFFMAN	DATE : NOV 2013

NORTH CAROLINA PROFESSIONAL SEAL 29112 ENGINEER RICHARD L. COFFMAN

DocuSigned by: Richard Coffman 8/4/2015

THE LOUIS BERGER GROUP, Inc.
1001 Wade Avenue, Suite 400
Raleigh, NC 27605-3322
NC COA No. F-0840

STATE OF NORTH CAROLINA
DEPARTMENT OF TRANSPORTATION
RALEIGH

GENERAL DRAWING FOR BRIDGE ON SR 1106 OVER DIX CREEK BETWEEN US 276 AND DEAD END

REVISIONS						SHEET NO.
NO.	BY:	DATE:	NO.	BY:	DATE:	S-3
1			3			TOTAL SHEETS
2			4			20

G:\OR Projects\OR1100 - NCDOT Group W\430350\Structures\430350_SD_GD03.DGN
8/4/2015 1100_PDF_full.pltcfg 1100_str.tbl

BM#1 -BL- STA 7+52.91 40.43' RT, EL. 3233.73

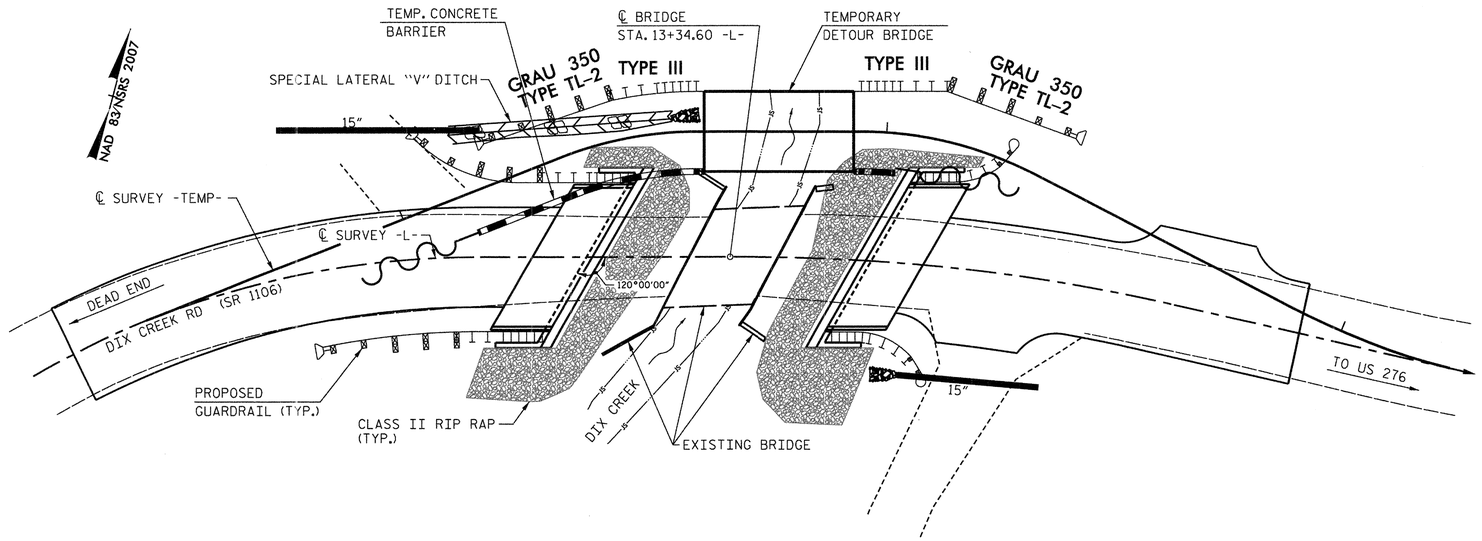

LOCATION SKETCH

NOTES:

ASSUMED LIVE LOAD = HL-93 OR ALTERNATE LOADING.

THIS BRIDGE HAS BEEN DESIGNED IN ACCORDANCE WITH THE AASHTO LRFD BRIDGE DESIGN SPECIFICATIONS.

THIS BRIDGE IS LOCATED IN SEISMIC ZONE 1.

FOR OTHER DESIGN DATA AND GENERAL NOTES, SEE SHEET SN.

FOR SUBMITTAL OF WORKING DRAWINGS, SEE SPECIAL PROVISIONS.

FOR FALSEWORK AND FORMWORK, SEE SPECIAL PROVISIONS.

FOR CRANE SAFETY, SEE SPECIAL PROVISIONS.

FOR UTILITY INFORMATION, SEE UTILITY PLANS.

FOR GROUT FOR STRUCTURES, SEE SPECIAL PROVISIONS.

THE EXISTING STRUCTURE CONSISTING OF ONE 18'-6" SPAN CONSISTING OF TIMBER FLOOR ON TIMBER JOISTS ON TIMBER ABUTMENTS SHALL BE REMOVED. THE EXISTING BRIDGE IS PRESENTLY POSTED FOR LOAD LIMIT. SHOULD THE STRUCTUAL INTEGRITY OF THEE BRIDGE DETERIORATE A LOAD LIMIT MAY BE POSTED AND MAY BE PRODUCED AS FOUND NECESSARY DURING THE LIFE OF THE PROJECT.

THE MATERIAL SHOWN IN THE CROSS-HATCHED AREA SHALL BE EXCAVATED FOR A DISTANCE OF 19 FT EACH SIDE OF CENTERLINE ROADWAY AS DIRECTED BY THE ENGINEER. THIS WORK WILL BE PAID FOR AT THE CONTRACT LUMP SUM PRICE FOR UNCLASSIFIED STRUCTURE EXCAVATION. SEE SECTION 412 OF THE STANDARD SPECIFICATIONS.

THE CONTRACTOR WILL BE REQUIRED TO CONSTRUCT, MAINTAIN AND AFTERWARDS REMOVE A TEMPORARY STRUCTURE AT STATION 11+78.36 -TEMP- FOR USE DURING CONSTRUCTION OF THE PROPOSED STRUCTURE. FOR CONSTRUCTION, MAINTENANCE AND REMOVAL OF TEMPORARY STRUCTURE, SEE SPECIAL PROVISIONS.

THE BRIDGE RAILS ON THE TEMPORARY STRUCTURE SHALL BE DESIGNED FOR THE AASHTO LRFD TEST LEVEL 3 (TL-3) CRASH TEST CRITERIA. FOR CONSTRUCTION, MAINTENANCE AND REMOVAL OF TEMPORARY STRUCTURE, SEE SPECIAL PROVISIONS.

THE SUBSTRUCTURE OF THE EXISTING BRIDGE INDICATED ON THE PLANS IS FROM THE BEST INFORMATION AVAILABLE. SINCE THIS INFORMATION IS SHOWN FOR THE CONVENIENCE OF THE CONTRACTOR, THE CONTRACTOR SHALL HAVE NO CLAIM WHATSOEVER AGAINST THE DEPARTMENT OF TRANSPORTATION FOR ANY DELAYS OR ADDITIONAL COST INCURRED BASED ON DIFFERENCES BETWEEN THE EXISTING BRIDGE SUBSTRUCTURE SHOWN ON THE PLANS AND THE ACTUAL CONDITIONS AT THE PROJECT SITE.

REMOVAL OF THE EXISTING BRIDGE SHALL BE PERFORMED SO AS NOT TO ALLOW DEBRIS TO FALL INTO THE WATER. THE CONTRACTOR SHALL REMOVE THE BRIDGE AND SUBMIT PLANS FOR DEMOLITION IN ACCORDANCE WITH ARTICLE 402-2 OF THE STANDARD SPECIFICATIONS.

THIS STRUCTURE HAS BEEN DESIGNED IN ACCORDANCE WITH "HEC 18-EVALUATING SCOUR AT BRIDGES."

ASPHALT WEARING SURFACE IS INCLUDED IN ROADWAY QUANTITY ON ROADWAY PLANS.

TOTAL BILL OF MATERIAL

	CONSTRUCTION, MAINTENANCE & REMOVAL OF TEMP. STRUCTURE @ STA. 11+78.36 -TEMP-	REMOVAL OF EXISTING STRUCTURE @ STA. 13+34.60	UNCLASSIFIED STRUCTURE EXCAVATION	CLASS A CONCRETE	BRIDGE APPROACH SLABS	REINFORCING STEEL	HP 12 X 53 STEEL PILES		STEEL PILE POINTS	VERTICAL CONCRETE BARRIER RAIL	RIP RAP CLASS II (2'-0" THICK)	GEOTEXTILE FOR DRAINAGE	ELASTOMERIC BEARINGS	3'-0" X 1'-9" PRESTRESSED CONCRETE CORED SLABS	
	LUMP SUM	LUMP SUM	LUMP SUM	CU. YDS.	LUMP SUM	LBS.	NO.	LIN.FT.	NO.	LIN.FT.	TON	SQ. YDS.	LUMP SUM	NO.	LIN.FT.
SUPERSTRUCTURE					LUMP SUM					110.29			LUMP SUM	10	550
END BENT NO. 1			LUMP SUM	22.5		2,800	7	210	7		92	102			
END BENT NO. 2			LUMP SUM	23.2		3,023	7	70	7		125	139			
TOTAL	LUMP SUM	LUMP SUM	LUMP SUM	45.7	LUMP SUM	5,823	14	280	14	110.29	217	241	LUMP SUM	10	550

DRAWN BY: R. KNIGHT DATE : JAN 2013
CHECKED BY: R. COFFMAN DATE : AUG 2013
DESIGN ENGINEER OF RECORD: R. COFFMAN DATE : NOV 2013

PROJECT NO. 17BP.14.R.5
HAYWOOD COUNTY
STATION: 13+34.60 -L-

SHEET 4 OF 4

NORTH CAROLINA PROFESSIONAL SEAL 29112 ENGINEER RICHARD L. COFFMAN

DocuSigned by: Richard Coffman 8/4/2015

THE LOUIS BERGER GROUP, Inc.
1001 Wade Avenue, Suite 400
Raleigh, NC 27605-3322
NC COA No. F-0840

STATE OF NORTH CAROLINA
DEPARTMENT OF TRANSPORTATION
RALEIGH

GENERAL DRAWING FOR BRIDGE ON SR 1106 OVER DIX CREEK BETWEEN US 276 AND DEAD END

REVISIONS						SHEET NO.
NO.	BY:	DATE:	NO.	BY:	DATE:	S-4
1			3			TOTAL SHEETS
2			4			20

G:\OR Projects\OR1100 - NCDOT Group W\430350\Structures\430350_SD_GD04.DGN
8/4/2015 1100_PDF_full.pltcfg 1100_str.tbl

LOAD AND RESISTANCE FACTOR RATING (LRFR) SUMMARY FOR PRESTRESSED CONCRETE GIRDERS

LEVEL		VEHICLE	WEIGHT (W) (TONS)	CONTROLLING LOAD RATING	MINIMUM RATING FACTORS (RF)	TONS = W X RF	STRENGTH I LIMIT STATE										SERVICE III LIMIT STATE						COMMENT NUMBER
								MOMENT					SHEAR					MOMENT						
							LIVELOAD FACTORS	DISTRIBUTION FACTORS (DF)	RATING FACTOR	SPAN	GIRDER LOCATION	DISTANCE FROM LEFT END OF SPAN (ft)	DISTRIBUTION FACTORS (DF)	RATING FACTOR	SPAN	GIRDER LOCATION	DISTANCE FROM LEFT END OF SPAN (ft)	LIVELOAD FACTORS	DISTRIBUTION FACTORS (DF)	RATING FACTOR	SPAN	GIRDER LOCATION	DISTANCE FROM LEFT END OF SPAN (ft)	
DESIGN LOAD RATING		HL-93(Inv)	N/A	(1)	1.163	--	1.75	0.249	1.36	55'	EL	26.923	0.659	1.21	55'	EL	10.769	0.80	0.249	**1.16**	55'	EL	**26.923**	
		HL-93(Opr)	N/A	--	1.564	--	1.35	0.249	1.76	55'	EL	26.923	0.659	1.56	55'	EL	10.769	N/A	--	--	--	--	--	
		HS-20(Inv)	36.000	(2)	1.424	51.265	1.75	0.249	1.7	55'	EL	26.923	0.659	**1.42**	55'	EL	**10.769**	0.80	0.249	1.46	55'	EL	26.923	
		HS-20(Opr)	36.000	--	1.846	66.455	1.35	0.249	2.2	55'	EL	26.923	0.659	1.85	55'	EL	10.769	N/A	--	--	--	--	--	
LEGAL LOAD RATING	SV	SNSH	13.500	--	3.057	41.264	1.40	0.249	4.46	55'	EL	26.923	0.659	3.96	55'	EL	10.769	0.80	0.249	3.06	55'	EL	26.923	
		SNGARBS2	20.000	--	2.374	47.473	1.40	0.249	3.46	55'	EL	26.923	0.659	2.90	55'	EL	10.769	0.80	0.249	2.37	55'	EL	26.923	
		SNAGRIS2	22.000	--	2.291	50.392	1.40	0.249	3.34	55'	EL	26.923	0.659	2.72	55'	EL	10.769	0.80	0.249	2.29	55'	EL	26.923	
		SNCOTTS3	27.250	--	1.524	41.521	1.40	0.249	2.22	55'	EL	26.923	0.659	1.98	55'	EL	10.769	0.80	0.249	1.52	55'	EL	26.923	
		SNAGGRS4	34.925	--	1.31	45.740	1.40	0.249	1.91	55'	EL	26.923	0.659	1.71	55'	EL	10.769	0.80	0.249	1.31	55'	EL	26.923	
		SNS5A	35.550	--	1.278	45.439	1.40	0.249	1.86	55'	EL	26.923	0.659	1.76	55'	EL	10.769	0.80	0.249	1.28	55'	EL	26.923	
		SNS6A	39.950	--	1.189	47.481	1.40	0.249	1.73	55'	EL	26.923	0.659	1.63	55'	EL	10.769	0.80	0.249	1.19	55'	EL	26.923	
		SNS7B	42.000	--	1.132	47.562	1.40	0.249	1.65	55'	EL	26.923	0.659	1.64	55'	EL	10.769	0.80	0.249	1.13	55'	EL	26.923	
	TTST	TNAGRIT3	33.000	--	1.454	47.984	1.40	0.249	2.12	55'	EL	26.923	0.659	1.92	55'	EL	10.769	0.80	0.249	1.45	55'	EL	26.923	
		TNT4A	33.075	--	1.465	48.451	1.40	0.249	2.14	55'	EL	26.923	0.659	1.85	55'	EL	10.769	0.80	0.249	1.46	55'	EL	26.923	
		TNT6A	41.600	--	1.213	50.478	1.40	0.249	1.77	55'	EL	26.923	0.659	1.81	55'	EL	10.769	0.80	0.249	1.21	55'	EL	26.923	
		TNT7A	42.000	--	1.228	51.576	1.40	0.249	1.79	55'	EL	26.923	0.659	1.67	55'	EL	10.769	0.80	0.249	1.23	55'	EL	26.923	
		TNT7B	42.000	--	1.282	53.827	1.40	0.249	1.87	55'	EL	26.923	0.659	1.58	55'	EL	10.769	0.80	0.249	1.28	55'	EL	26.923	
		TNAGRIT4	43.000	--	1.213	52.158	1.40	0.249	1.77	55'	EL	26.923	0.659	1.52	55'	EL	10.769	0.80	0.249	1.21	55'	EL	26.923	
		TNAGT5A	45.000	--	1.136	51.134	1.40	0.249	1.66	55'	EL	26.923	0.659	1.55	55'	EL	10.769	0.80	0.249	1.14	55'	EL	26.923	
		TNAGT5B	45.000	(3)	1.116	50.224	1.40	0.249	1.63	55'	EL	26.923	0.659	1.44	55'	EL	10.769	0.80	0.249	**1.12**	55'	EL	**26.923**	

LOAD FACTORS:

DESIGN LOAD RATING FACTORS	LIMIT STATE	γ_{DC}	γ_{DW}
	STRENGTH I	1.25	1.50
	SERVICE III	1.00	1.00

NOTES:

MINIMUM RATING FACTORS ARE BASED ON THE STRENGTH I AND SERVICE III LIMIT STATES.

ALLOWABLE STRESSES FOR SERVICE III LIMIT STATE ARE AS REQUIRED FOR DESIGN.

COMMENTS:

1.
2.
3.
4.

(#) CONTROLLING LOAD RATING

(1) DESIGN LOAD RATING (HL-93)

(2) DESIGN LOAD RATING (HS-20)

(3) LEGAL LOAD RATING **

** SEE CHART FOR VEHICLE TYPE

GIRDER LOCATION

I - INTERIOR GIRDER
EL - EXTERIOR LEFT GIRDER
ER - EXTERIOR RIGHT GIRDER

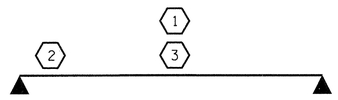

LRFR SUMMARY

FOR SPAN 'A'

PROJECT NO. 17BP.14.R.5

HAYWOOD COUNTY

STATION: 13+34.60 -L-

STATE OF NORTH CAROLINA
DEPARTMENT OF TRANSPORTATION
RALEIGH
STANDARD

LRFR SUMMARY FOR 55' CORED SLAB UNIT 60° SKEW & 120° SKEW (NON-INTERSTATE TRAFFIC)

NORTH CAROLINA PROFESSIONAL SEAL 29112 ENGINEER RICHARD L. COFFMAN

DocuSigned by: Richard Coffman 8/4/2015
13822479E18C4DC...

THE LOUIS BERGER GROUP, Inc.
1001 Wade Avenue, Suite 400
Raleigh, NC 27605-3322
NC COA No. F-0840

REVISIONS					
NO.	BY:	DATE:	NO.	BY:	DATE:
1			3		
2			4		

SHEET NO. S-5

TOTAL SHEETS 20

DRAWN BY: R. KNIGHT DATE : JULY 2012
CHECKED BY: R. COFFMAN DATE : AUG 2013
DESIGN ENGINEER OF RECORD: R. COFFMAN DATE : NOV 2013

STD. NO. 2LRFR1_60&120S_55I

G:\OR Projects\OR1100 - NCDOT Group W\430350\Structures\430350_SD_LRFR.dgn
8/4/2015 1100_PDF_full.pltcfg 1100_str.tbl

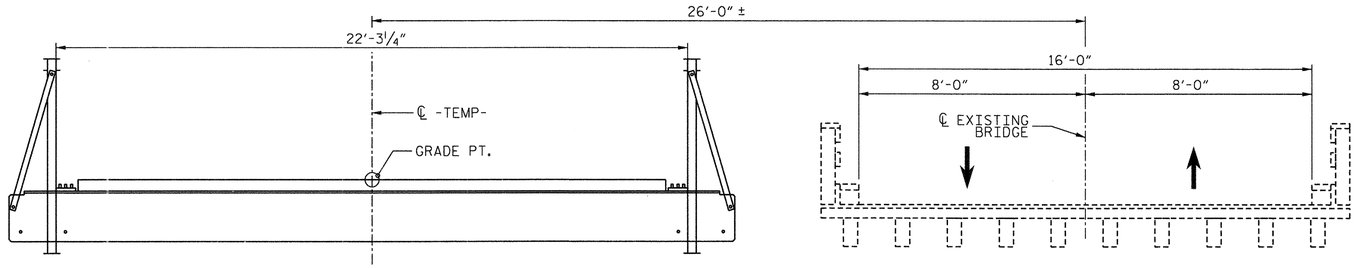

STAGE 1 CONSTRUCTION

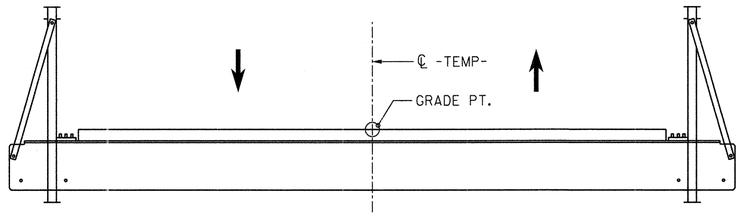

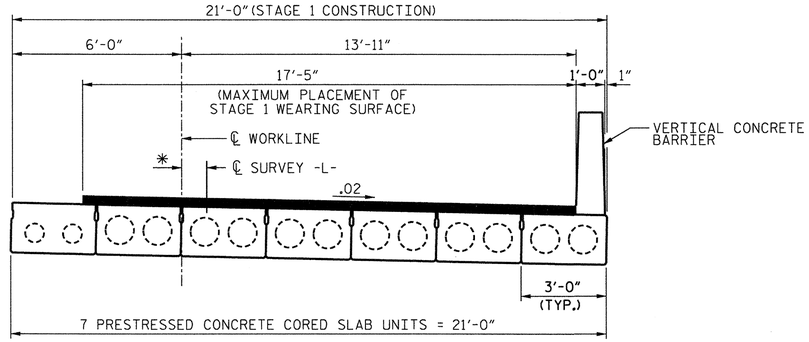

STAGE 2 CONSTRUCTION

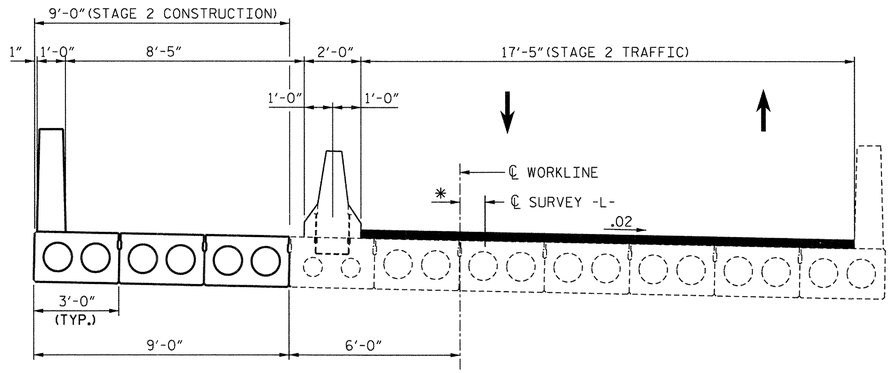

* 0" @ W.P. 1
11¾" @ W.P. 2

STAGE 3 CONSTRUCTION

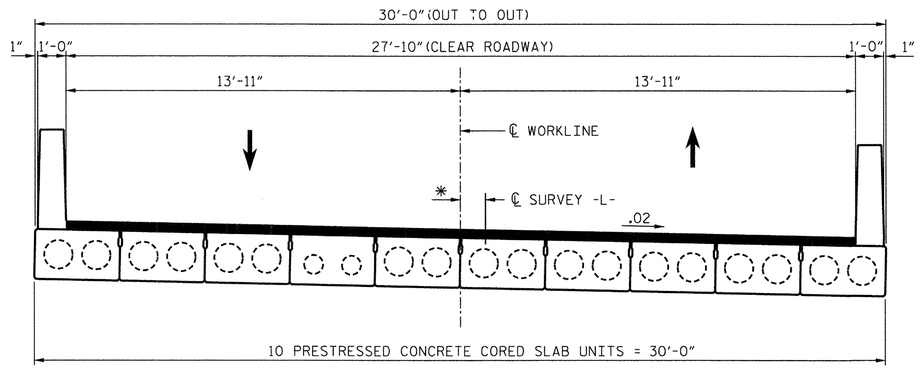

FINAL STRUCTURE

PROJECT NO. 17BP.14.R.5
HAYWOOD COUNTY
STATION: 13+34.60 -L-

STATE OF NORTH CAROLINA
DEPARTMENT OF TRANSPORTATION
RALEIGH

STAGING DIAGRAM FOR BRIDGE ON SR 1380 BETWEEN SR 1337 AND DEAD END

NORTH CAROLINA PROFESSIONAL SEAL 29112 ENGINEER RICHARD L. COFFMAN

DocuSigned by: Richard Coffman 8/4/2015

THE LOUIS BERGER GROUP, Inc.
1001 Wade Avenue, Suite 400
Raleigh, NC 27605-3322
NC COA No. F-0840

REVISIONS						SHEET NO.
NO.	BY:	DATE:	NO.	BY:	DATE:	S-6
1			3			TOTAL SHEETS
2			4			20

DRAWN BY: M. HOGAN DATE : JULY 2012
CHECKED BY: R. COFFMAN DATE : AUG 2013
DESIGN ENGINEER OF RECORD: R. COFFMAN DATE : NOV 2013

C:\OR Projects\OR1100 - NCDOT Group W\430350\Structures\430350_SD_STAGE.dgn
8/4/2015 1100_PDF_fullplt.cfg 1100_str.tbl

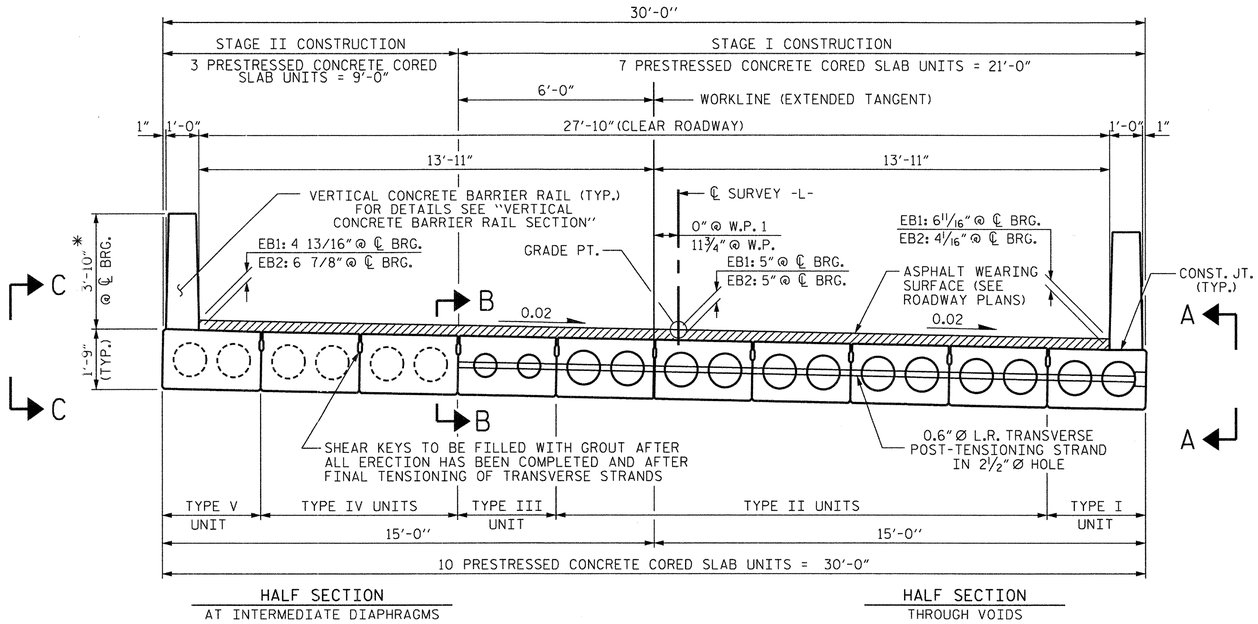

TYPICAL SECTION

FINAL BRIDGE (STAGE 1 AND 2 COMPLETED)
(FOR VIEWS A-A, B-B & C-C, SEE SHEET 2 OF 2)
(ALL DIMENSIONS ARE NORMAL TO WORKLINE)

* - THE MAXIMUM BARRIER RAIL HEIGHT AND ASPHALT THICKNESS IS SHOWN. THE HEIGHT OF THE BARRIER RAIL AND ASPHALT THICKNESS VARIES WHILE THE TOP OF THE BARRIER RAIL FOLLOWS THE PROFILE OF THE GUTTERLINE. FOR RAIL HEIGHT DETAILS AND ASPHALT THICKNESS, SEE THE "VERTICAL CONCRETE BARRIER RAIL SECTION" DETAIL.

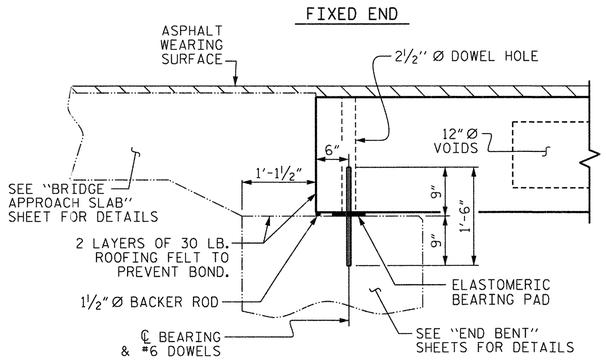

SECTION AT END BENT

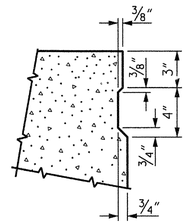

SHEAR KEY DETAIL

NOTE: OMIT SHEAR KEY ON OUTSIDE FACE OF EXTERIOR CORED SLABS.

PROJECT NO. 17BP.14.R.5
HAYWOOD COUNTY
STATION: 13+34.60 -L-

SHEET 1 OF 2

STATE OF NORTH CAROLINA
DEPARTMENT OF TRANSPORTATION
RALEIGH

STANDARD 3'-0" X 1'-9" PRESTRESSED CONCRETE CORED SLAB UNIT 120° SKEW

NORTH CAROLINA PROFESSIONAL SEAL 29112 ENGINEER RICHARD L. COFFMAN

DocuSigned by: Richard Coffman 8/4/2015
13822478F18C4DC...

THE LOUIS BERGER GROUP, Inc.
1001 Wade Avenue, Suite 400
Raleigh, NC 27605-3322
NC COA No. F-0840

REVISIONS						SHEET NO.
NO.	BY:	DATE:	NO.	BY:	DATE:	S-7
1			3			TOTAL SHEETS
2			4			20

DRAWN BY:	R. KNIGHT	DATE : JULY 2012
CHECKED BY:	R. COFFMAN	DATE : AUG 2013
DESIGN ENGINEER OF RECORD:	R. COFFMAN	DATE : NOV 2013

STD. NO. 21"PCS2_30_120S

G:\OR Projects\OR1100 - NCDOT Group W\430350\Structures\430350_SD_TYP01.dgn
8/4/2015 1100_PDF_full.pltcfg 1100_str.tbl

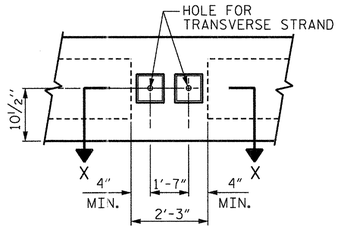

VIEW A-A

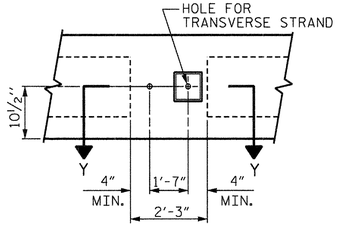

VIEW B-B

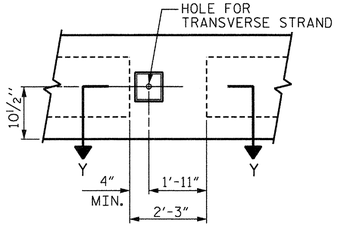

VIEW C-C

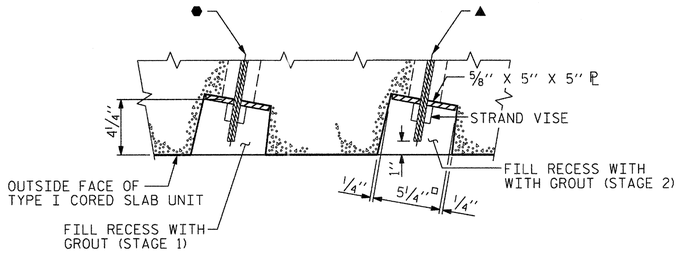

SECTION X-X

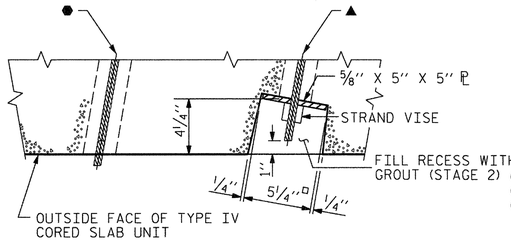

SECTION Y-Y

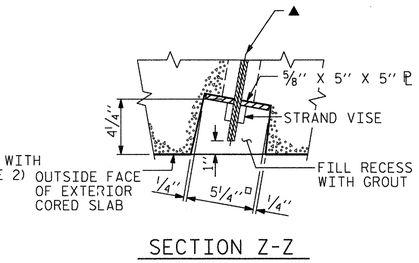

SECTION Z-Z

● ℄ 0.6 "Ø H.S. TRANSVERSE POST-TENSIONING STRAND SHEATHERD WITH A NON-CORROSIVE PIPE (TO BE TENSIONED DURING STAGE 1 CONST.)

▲ ℄ 0.6 "Ø H.S. TRANSVERSE POST-TENSIONING STRAND SHEATHERD WITH A NON-CORROSIVE PIPE (TO BE TENSIONED DURING STAGE 2 CONST.)

GROUTED RECESS AT END OF POST-TENSIONED STRAND OF CORED SLABS

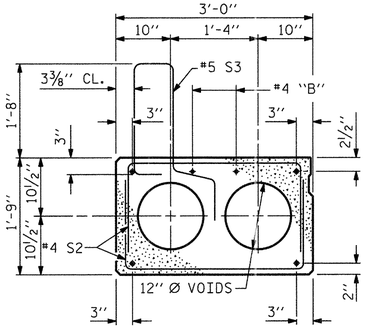

EXT. SLAB SECTION

(FOR PRESTRESSED STRAND LAYOUT, SEE INTERIOR SLAB SECTION.)

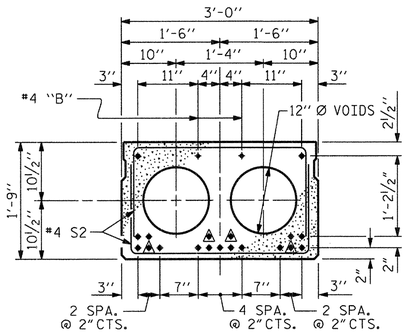

INTERIOR SLAB SECTION

(19 STRANDS REQUIRED)

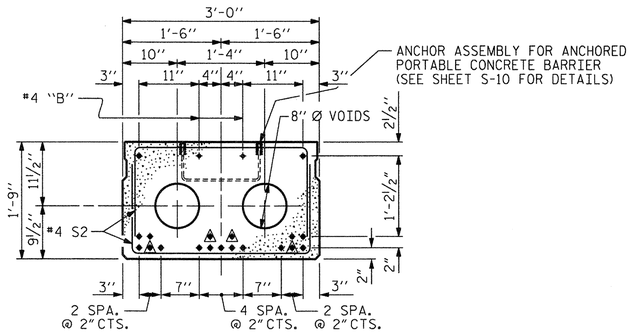

INTERIOR SLAB SECTION

(19 STRANDS REQUIRED)
TYPE III UNIT

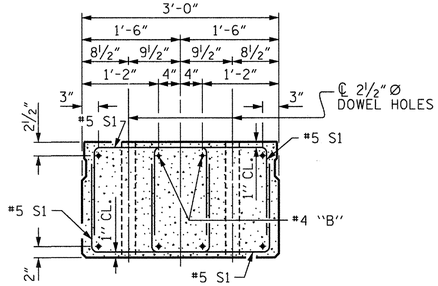

END ELEVATION

SHOWING PLACEMENT OF DOUBLE STIRRUPS AND LOCATION OF DOWEL HOLES. (STRAND LAYOUT NOT SHOWN.) INTERIOR SLAB UNIT SHOWN-EXTERIOR SLAB UNIT SIMILAR EXCEPT SHEAR KEY LOCATION.

BOND SHALL BE BROKEN ON THESE STRANDS FOR A DISTANCE OF 6'-0" FROM END OF CORED SLAB UNIT. SEE STANDARD SPECIFICATIONS, ARTICLE 1078-7.

DEBONDING LEGEND

PROJECT NO. 17BP.14.R.5

HAYWOOD COUNTY

STATION: 13+34.60 -L-

SHEET 2 OF 2

DRAWN BY:	J. MYA	DATE :	JULY 2012		
CHECKED BY:	R. COFFMAN	DATE :	AUG 2013		
DESIGN ENGINEER OF RECORD:	R. COFFMAN	DATE :	NOV 2013		

STATE OF NORTH CAROLINA
DEPARTMENT OF TRANSPORTATION
RALEIGH

SUPERSTRUCTURE
TYPICAL SECTION

NORTH CAROLINA PROFESSIONAL SEAL 29112 ENGINEER RICHARD L. COFFMAN

DocuSigned by: Richard Coffman 8/4/2015
13822479F1BC4DC...

THE LOUIS BERGER GROUP, Inc.
1001 Wade Avenue, Suite 400
Raleigh, NC 27605-3322
NC COA No. F-0840

REVISIONS						SHEET NO.
NO.	BY:	DATE:	NO.	BY:	DATE:	S-8
1			3			TOTAL SHEETS
2			4			20

G:\OR Projects\OR1100 - NCDOT Group W\430350\Structures\430350_SD_TYP02.dgn
8/4/2015 1100_PDF_full.pltcfg 1100_str.tbl

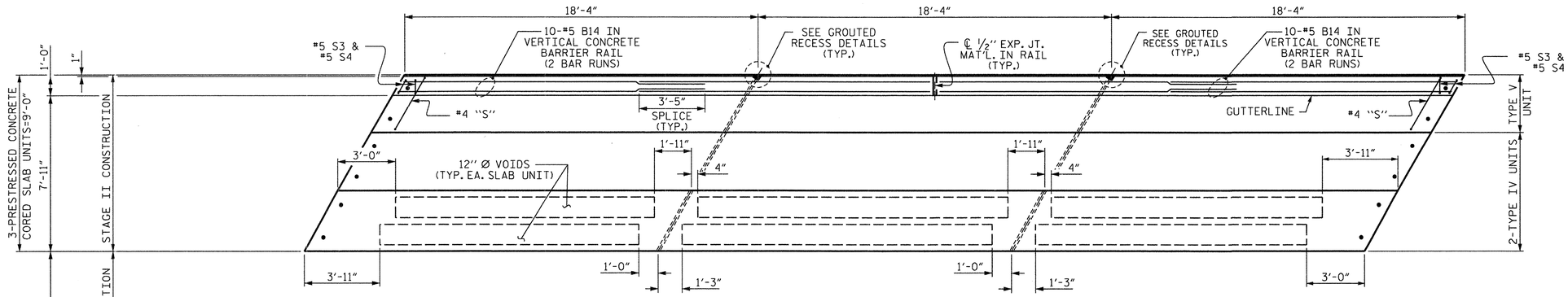

PLAN OF UNIT - STAGE II

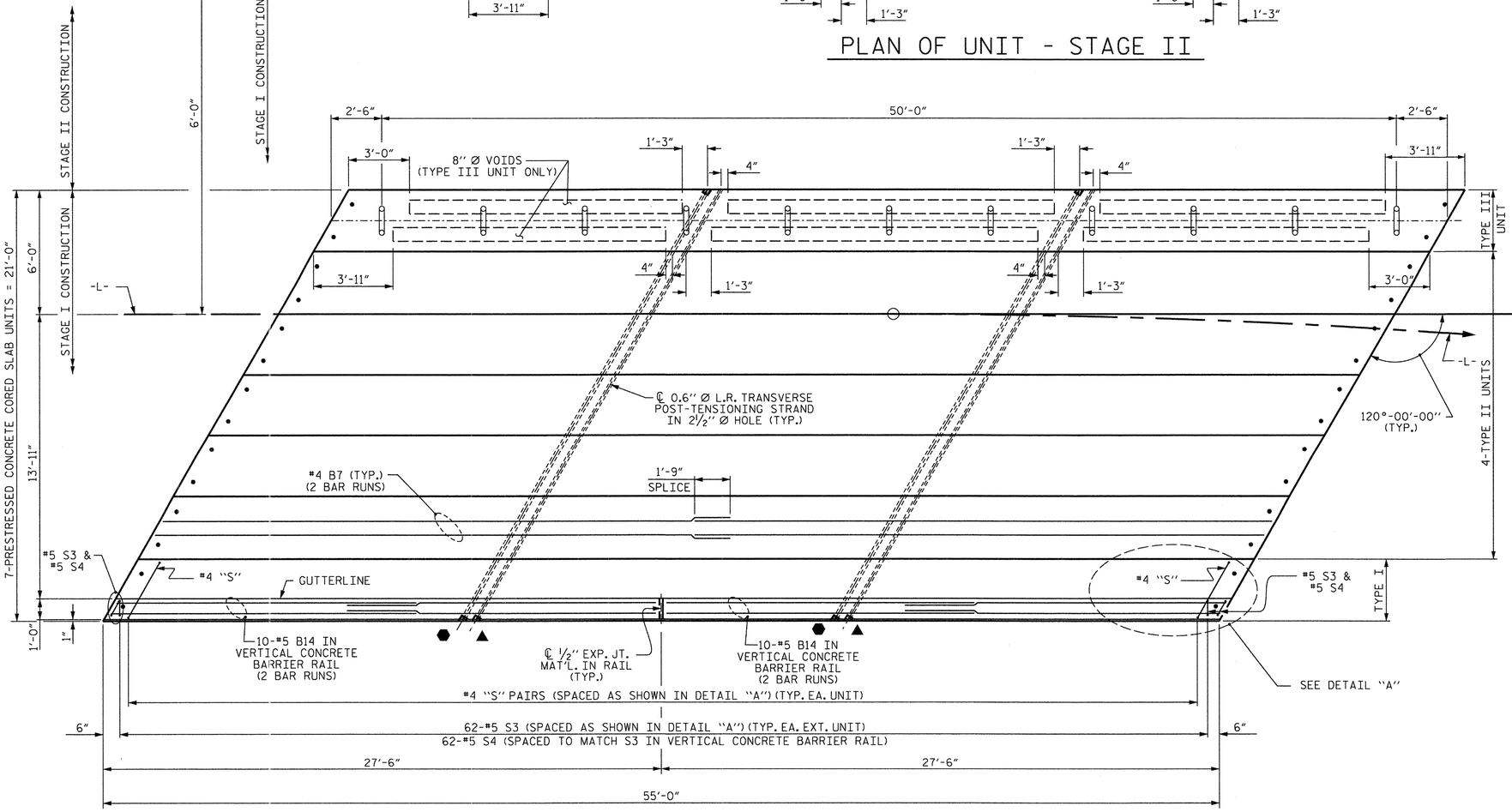

PLAN OF UNIT - STAGE I

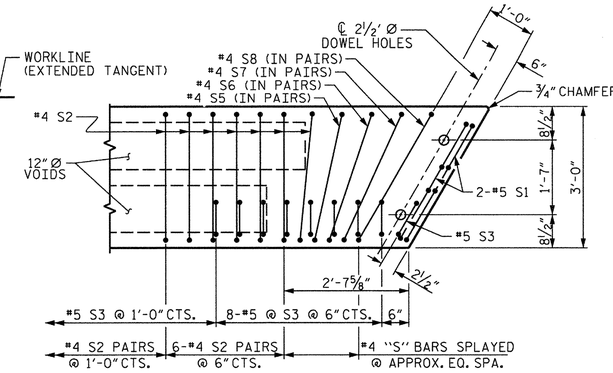

DETAIL "A"

NOTE: EXTERIOR UNIT SHOWN - INTERIOR UNIT SIMILAR EXCEPT OMIT #5 S3 BARS.

NOTES:

- ⬢ STRAND #1 GOES THRU 7 CORED SLAB UNITS (TO BE TENSIONED DURING STAGE 1 CONSTRUCTION)
- ▲ STRAND #2 GOES THRU ALL 10 CORED SLAB UNITS (TO BE TENSIONED DURING STAGE 2 CONSTRUCTION)

STRAND #1 AND STRAND #2 ARE 0.6 "Ø H.S. TRANSVERSE POST-TENSIONED STRANDS.

THE #4S2 AND #5S3 BARS MAY BE SHIFTED SLIGHTLY IN ORDER TO MAINTAIN A 2"MINIMUM CLEARANCE TO THE 2 1/2 " HOLES.

PROJECT NO. 17BP.14.R.5

HAYWOOD COUNTY

STATION: 13+34.60 -L-

SHEET 1 OF 5

STATE OF NORTH CAROLINA
DEPARTMENT OF TRANSPORTATION
RALEIGH

PLAN OF 55' UNIT 27'-10" CLEAR ROADWAY 120° SKEW

NORTH CAROLINA PROFESSIONAL SEAL 29112 ENGINEER RICHARD L. COFFMAN

DocuSigned by: Richard Coffman 8/4/2015
13822479E18C4DC...

THE LOUIS BERGER GROUP, Inc.
1001 Wade Avenue, Suite 400
Raleigh, NC 27605-3322
NC COA No. F-0840

REVISIONS						SHEET NO.
NO.	BY:	DATE:	NO.	BY:	DATE:	S-9
1			3			TOTAL SHEETS
2			4			20

DRAWN BY:	R. KNIGHT	DATE: FEB 2013
CHECKED BY:	R. COFFMAN	DATE: AUG 2013
DESIGN ENGINEER OF RECORD:	R. COFFMAN	DATE: NOV 2013

C:\OR Projects\OR1100 - NCDOT Group W\430350\Structures\430350_SD_PCS01.dgn
8/4/2015 1100_PDF_full.pltcfg 1100_str.tbl

STD. NO. 21"PCS 30 120S EFL

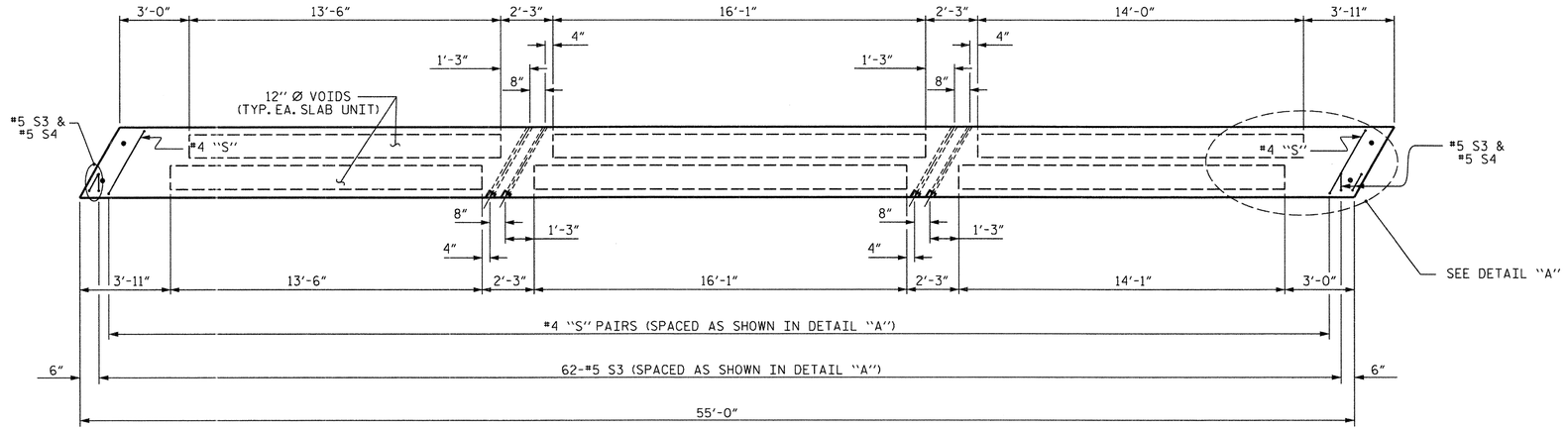

PLAN OF TYPE I CORED SLAB UNIT - STAGE I

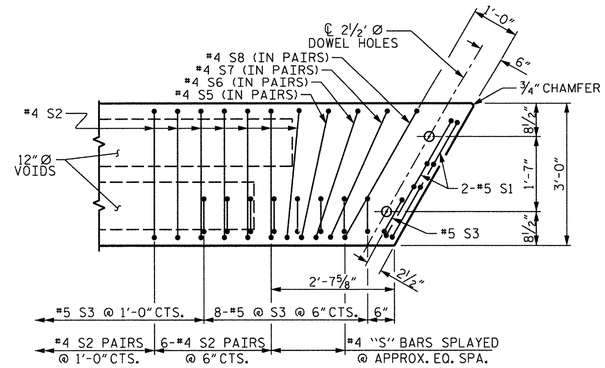

DETAIL "A"

NOTE: EXTERIOR UNIT TYPE I SHOWN - INTERIOR UNIT TYPE II SIMILAR EXCEPT OMIT #5 S3 BARS.

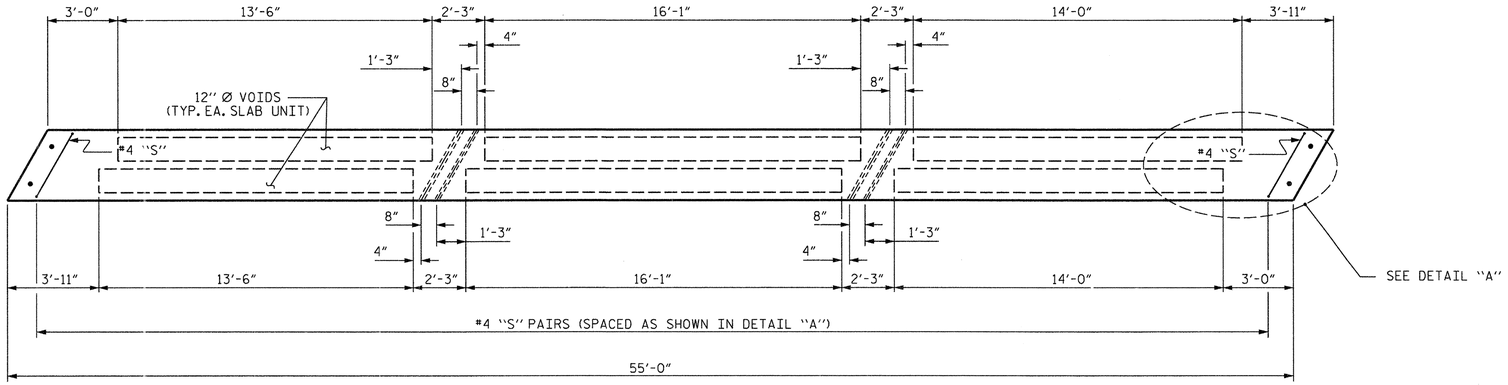

PLAN OF TYPE II CORED SLAB UNIT - STAGE I

PROJECT NO. 17BP.14.R.5

HAYWOOD COUNTY

STATION: 13+34.60 -L-

SHEET 2 OF 5

STATE OF NORTH CAROLINA
DEPARTMENT OF TRANSPORTATION
RALEIGH

PLAN OF 55' UNIT 27'-10" CLEAR ROADWAY 120° SKEW

NORTH CAROLINA PROFESSIONAL SEAL 29112 ENGINEER RICHARD L. COFFMAN

DocuSigned by: Richard Coffman 8/4/2015
13822479E18C4DC...

THE LOUIS BERGER GROUP, Inc.
1001 Wade Avenue, Suite 400
Raleigh, NC 27605-3322
NC COA No. F-0840

REVISIONS						SHEET NO.
NO.	BY:	DATE:	NO.	BY:	DATE:	S-10
1			3			TOTAL SHEETS
2			4			20

DRAWN BY:	R. KNIGHT	DATE: FEB 2013
CHECKED BY:	R. COFFMAN	DATE: AUG 2013
DESIGN ENGINEER OF RECORD:	R. COFFMAN	DATE: NOV 2013

STD. NO. 21"PCS_30_120S_55L

G:\OR Projects\OR1100 - NCDOT Group W\430350\Structures\430350_SD_PCS02.dgn
8/4/2015 1100_PDF_full.pltcfg 1100_str.tbl

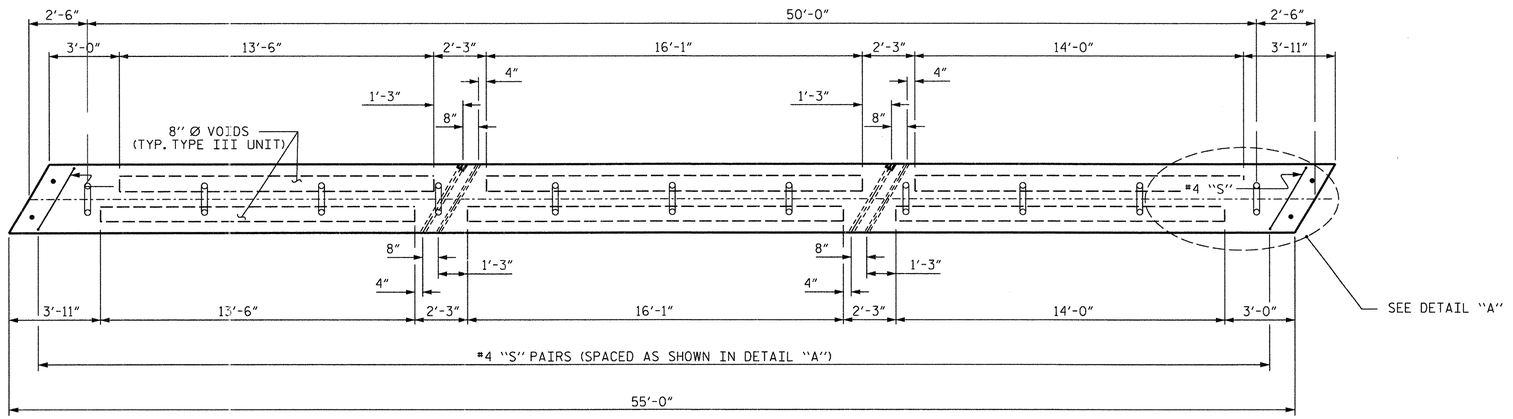

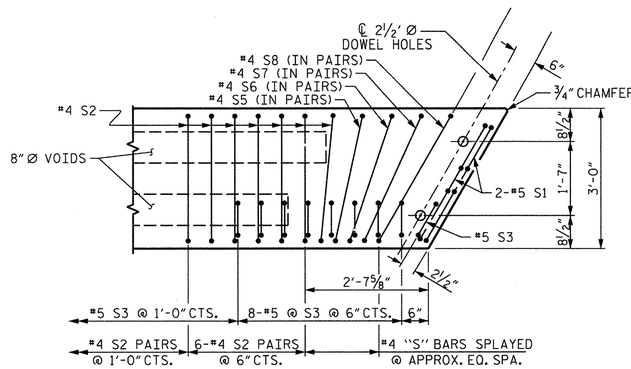

DETAIL "A"

NOTE: EXTERIOR UNIT SHOWN - INTERIOR UNIT SIMILAR EXCEPT OMIT #5 S3 BARS.

PLAN OF TYPE III CORED SLAB UNIT - STAGE I

ANCHOR ASSEMBLY NOTES:

THE ANCHOR ASSEMBLY FOR PORTABLE CONCRETE BARRIER SHALL CONSIST OF THE FOLLOWING COMPONENTS:

A. FERRULES SHALL BE MADE FROM STEEL MEETING THE REQUIREMENTS OF AASHTO M169, GRADE 12L14 AND SHALL HAVE A MINIMUM LENGTH OF THREADS OIF 2½".

B. 2-⅞" Ø x 1'-0" ANCHOR BOLTS SHALL CONFORM TO THE REQUIREMENTSOF ASTM A307. ANCHOR BOLTS SHALL BE GALVANIZED. (AT THE OPTION OF THE CONTRACTOR'S OPTION STAINLESS STEEL BOLTS MAY BE USED AS AN ALTERNATE FOR THE ⅞" Ø x 1'-0" GALVANIZED BOLTS. THEY SHALL CONFORM TO OR EXCEED THE MECHANICAL REQUIREMENTS OF ASTM A307. THE USE OF THIS ALTERNATE SHALL BE APPROVED BY THE ENGINEER.

C. WIRE STRUTS SHOWN IN THE ANCHOR ASSEMBLY DETAIL ARE MINIMUM ALLOWABLE SIZE AND SHALL HAVE A MINIMUM TENSILE STRENGTH OF 100,000 P.S.I.

ANCHOR ASSEMBLY WITH BOLTS SHALL BE ASSEMBLED IN THE SHOP. BOLT THREADS MAY BE RECUT AS NECESSARY TO INSURE FIT.

THE COST OF THE ANCHOR ASSEMBLY COMPLETE IN PLACE, SHALL BE INCLUDED, AS APPLICABLE, IN THE UNIT CONTRACT PRICE BID FOR 3'-0" x 1'-9" PRESTRESSED CONCRETE CORED SLAB OR LUMP SUM FOR THE APPROACH SLABS.

FERRULES TO BE PLUGGED DURING CASTING OF THE CORED SLAB UNITS OR POURING OF THE APPROACH SLABS AS RECOMMENDED BY THE MANUFACTURER.

AT THE CONTRACTOR'S OPTION, FERRULES WITH OPEN OR CLOSED ENDS MAY BE USED.

FOR 4" x 3½" x ½" BARRIER WASHER TO BE USED WITH THE ANCHOR ASSEMBLY, SEE ROADWAY PLANS.

PAYMENT FOR THE ANCHORED PORTABLE CONCRETE BARRIER AND BARRIER WASHER ARE INCLUDED IN THE TRAFFIC CONTROL PLANS.

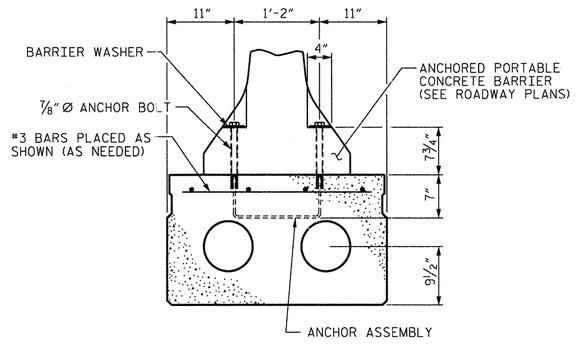

TYPE III CORED SLAB SECTION

(SHOWING PLACEMENT OF ANCHOR ASSEMBLY)

THE #3 BARS ARE INCIDENTAL AND THEIR COST SHALL BE INCLUDED IN THE PRICE BID FOR THE PRESTRESSED CONCRETE CORDED SLAB

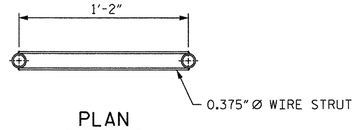

PLAN

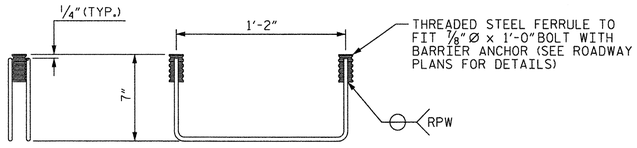

ELEVATION

ANCHOR ASSEMBLY FOR ANCHORED PORTABLE CONCRETE BARRIER

(6 ASSEMBLIES REQUIRED IN TYPE III CORED SLAB UNIT)
(4 ASSEMBLIES REQUIRED IN THE APPROACH SLABS)

PROJECT NO. 17BP.14.R.5
HAYWOOD COUNTY
STATION: 13+34.60 -L-

SHEET 3 OF 5

STATE OF NORTH CAROLINA
DEPARTMENT OF TRANSPORTATION
RALEIGH

PLAN OF 55' UNIT
27'-10" CLEAR ROADWAY
120° SKEW

NORTH CAROLINA PROFESSIONAL SEAL 29112 ENGINEER RICHARD L COFFMAN

DocuSigned by: Richard Coffman 8/4/2015
13822476E18C4DC...

THE LOUIS BERGER GROUP, Inc.
1001 Wade Avenue, Suite 400
Raleigh, NC 27605-3322
NC COA No. F-0840

REVISIONS						SHEET NO.
NO.	BY:	DATE:	NO.	BY:	DATE:	S-11
1			3			TOTAL SHEETS
2			4			20

DRAWN BY: R. KNIGHT DATE : FEB 2013
CHECKED BY: R. DeCOLA DATE : AUG 2013
DESIGN ENGINEER OF RECORD: R. COFFMAN DATE : NOV 2013

STD. NO. 21"PCS_30_120S_55L

G:\OR Projects\OR1100 - NCDOT Group W\430350\Structures\430350_SD_PCS03.dgn
8/4/2015 1100_PDF_full.pltcfg 1100_str.tbl

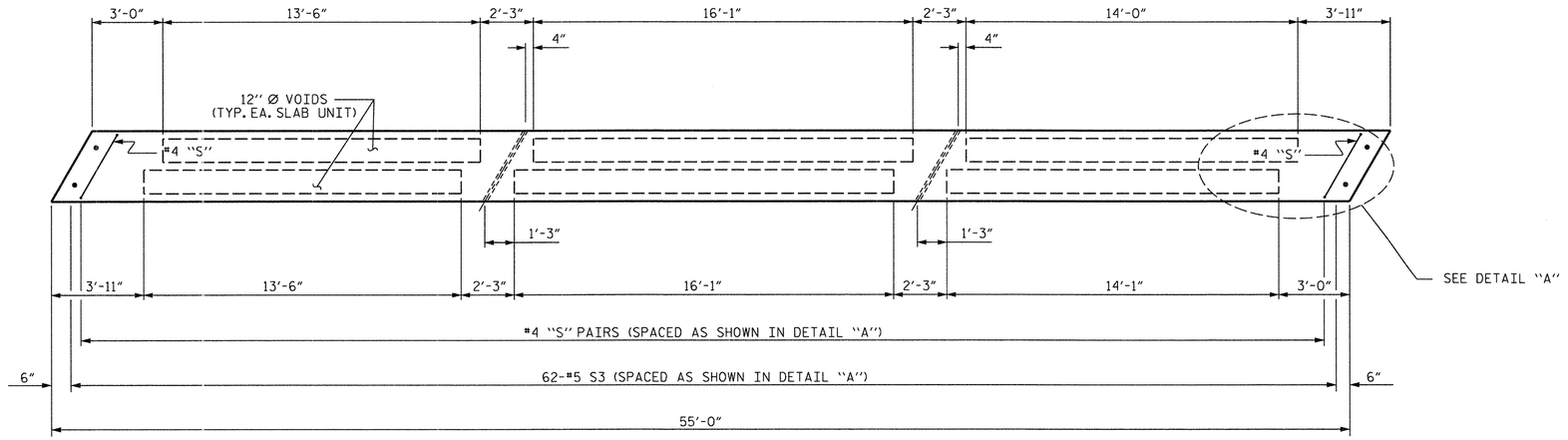

PLAN OF TYPE IV CORED SLAB UNIT - STAGE II

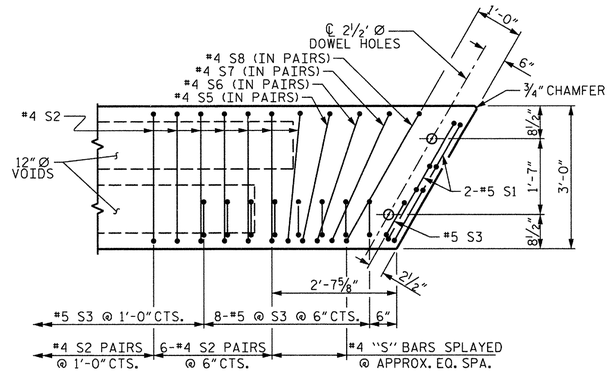

DETAIL "A"

NOTE: EXTERIOR UNIT TYPE I SHOWN - INTERIOR UNIT TYPE II SIMILAR EXCEPT OMIT #5 S3 BARS.

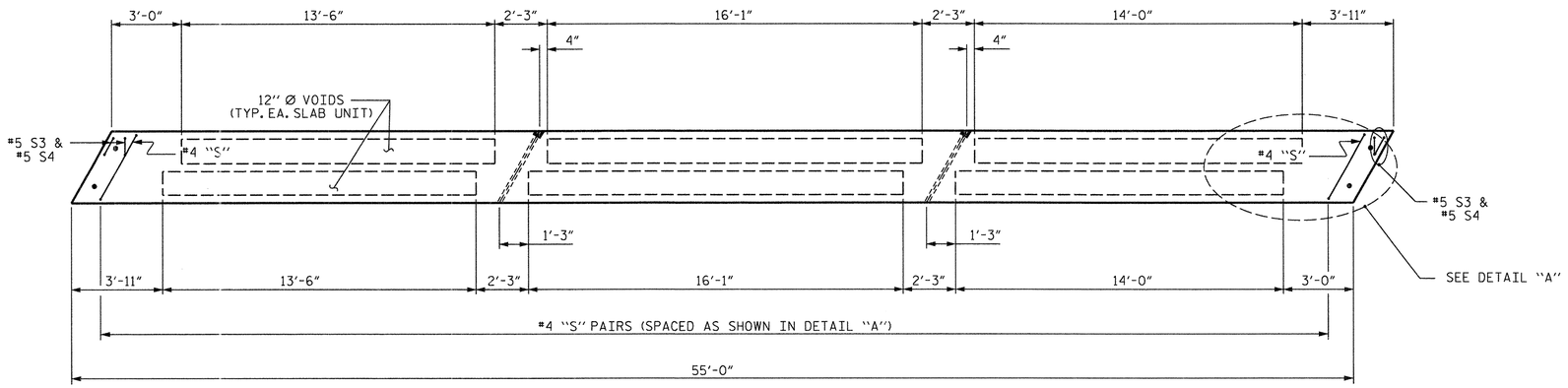

PLAN OF TYPE V CORED SLAB UNIT - STAGE II

PROJECT NO. 17BP.14.R.5

HAYWOOD COUNTY

STATION: 13+34.60 -L-

DRAWN BY:	R. KNIGHT	DATE :	FEB 2013
CHECKED BY:	R. COFFMAN	DATE :	AUG 2013
DESIGN ENGINEER OF RECORD:	R. COFFMAN	DATE :	NOV 2013

NORTH CAROLINA PROFESSIONAL SEAL 29112 ENGINEER RICHARD L. COFFMAN

DocuSigned by: Richard Coffman 8/4/2015

13822476F18C4DC...

THE LOUIS BERGER GROUP, Inc.
1001 Wade Avenue, Suite 400
Raleigh, NC 27605-3322
NC COA No. F-0840

STATE OF NORTH CAROLINA
DEPARTMENT OF TRANSPORTATION
RALEIGH

PLAN OF 55' UNIT 27'-10" CLEAR ROADWAY 120° SKEW

REVISIONS						SHEET NO.
NO.	BY:	DATE:	NO.	BY:	DATE:	S-12
1			3			TOTAL SHEETS
2			4			20

G:\OR Projects\OR1100 - NCDOT Group W\430350\Structures\430350_SD_PCS04.dgn
8/4/2015 1100_PDF_full.pltcfg 1100_str.tbl

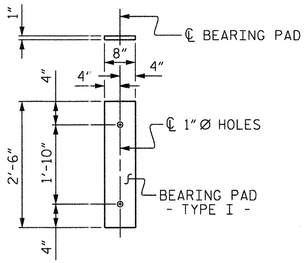

FIXED END
(TYPE I - 20 REQ'D)

ELASTOMERIC BEARING DETAILS

ELASTOMER IN ALL BEARINGS SHALL BE 50 DUROMETER HARDNESS.

GRADE 270 STRANDS	
	0.6"Ø L.R.
AREA (SQUARE INCHES)	0.217
ULTIMATE STRENGTH (LBS. PER STRAND)	58,600
APPLIED PRESTRESS (LBS. PER STRAND)	43,950

CORED SLABS REQUIRED			
	NUMBER	LENGTH	TOTAL LENGTH
55' UNIT			
EXTERIOR C.S.	2	55'-0"	110'-0"
INTERIOR C.S.	8	55'-0"	440'-0"
TOTAL	10		550'-0"

BAR TYPES

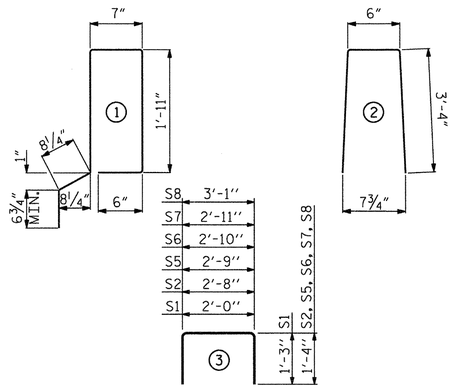

ALL BAR DIMENSIONS ARE OUT TO OUT

NOTES

ALL PRESTRESSING STRANDS SHALL BE 7-WIRE LOW RELAXATION GRADE 270 STRANDS AND SHALL CONFORM TO AASHTO M203 EXCEPT FOR SAMPLING REQUIREMENTS WHICH SHALL BE IN ACCORDANCE WITH THE STANDARD SPECIFICATIONS.

ALL REINFORCING STEEL CAST WITH THE CORED SLAB SECTIONS SHALL BE GRADE 60 AND SHALL BE INCLUDED IN THE UNIT PRICE BID FOR PRESTRESSED CONCRETE CORED SLABS.

RECESSES FOR TRANSVERSE STRANDS SHALL BE GROUTED AFTER THE TENSIONING OF THE STRANDS.

THE 2½"Ø DOWEL HOLES AT FIXED ENDS OF SLAB SECTIONS SHALL BE FILLED WITH NON-SHRINK GROUT.

THE 2"Ø BACKER ROD SHALL CONFORM TO THE REQUIREMENTS OF TYPE M BOND BREAKER. SEE SECTION 1028 OF THE STANDARD SPECIFICATIONS.

WHEN CORED SLABS ARE CAST, AN INTERNAL HOLD-DOWN SYSTEM SHALL BE EMPLOYED TO PREVENT VOIDS FROM RISING OR MOVING SIDEWAYS. AT LEAST SIX WEEKS PRIOR TO CASTING CORED SLABS, THE CONTRACTOR SHALL SUBMIT TO THE ENGINEER FOR REVIEW AND COMMENT, DETAILED DRAWINGS OF THE PROPOSED HOLD-DOWN SYSTEM. IN ADDITION TO STRUCTURAL DETAILS, LOCATION AND SPACING OF THE HOLD-DOWNS SHALL BE INDICATED.

ALL REINFORCING STEEL IN THE VERTICAL CONCRETE BARRIER RAIL SHALL BE EPOXY COATED.

PRESTRESSING STRANDS SHALL BE CUT FLUSH WITH THE CORED SLAB UNIT ENDS.

APPLY EPOXY PROTECTIVE COATING TO CORED SLAB UNIT ENDS.

GROOVED CONTRACTION JOINTS, ½" IN DEPTH, SHALL BE TOOLED IN ALL EXPOSED FACES OF THE BARRIER RAIL AND IN ACCORDANCE WITH ARTICLE 825-10(B) OF THE STANDARD SPECIFICATIONS. A CONTRACTION JOINT SHALL BE LOCATED AT EACH THIRD POINT BETWEEN BARRIER RAIL EXPANSION JOINTS. ONLY ONE CONTRACTION JOINT IS REQUIRED AT MIDPOINT OF BARRIER RAIL SEGMENTS LESS THAN 20 FEET IN LENGTH AND NO CONTRACTION JOINTS ARE REQUIRED FOR THOSE SEGMENTS LESS THAN 10 FEET IN LENGTH.

TRANSVERSE POST TENSIONING OF THE CORED SLAB UNITS SHALL BE DONE IN ACCORDANCE WITH THE STANDARD SPECIFICATIONS.

THE TRANSFER OF LOAD FROM THE ANCHORAGES TO THE CORED SLAB UNIT SHALL BE DONE WHEN THE CONCRETE HAS REACHED A COMPRESSIVE STRENGTH OF NOT LESS THAN THE REQUIRED STRENGTH SHOWN IN THE "CONCRETE RELEASE STRENGTH" TABLE.

FOR GROUT FOR STRUCTURES, SEE SPECIAL PROVISIONS.

CONCRETE RELEASE STRENGTH	
UNIT	PSI
55' UNIT	4900

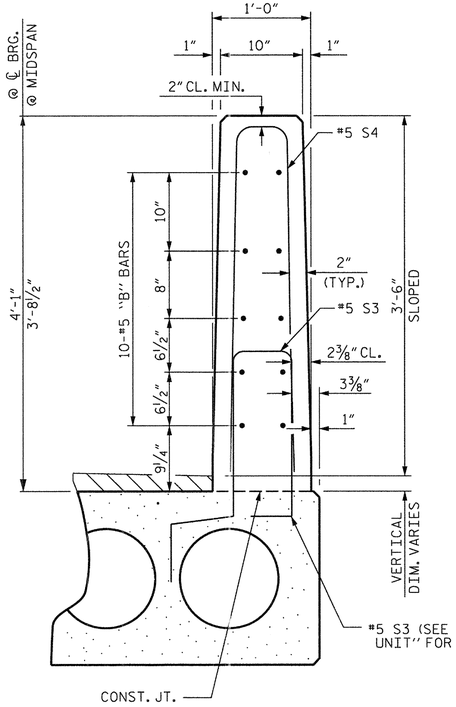

VERTICAL CONCRETE BARRIER RAIL SECTION

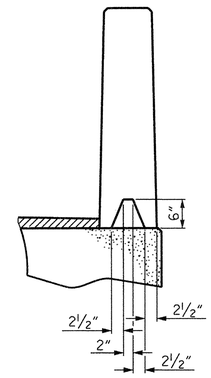

SECTION S-S
AT DAM IN OPEN JOINT
(THIS IS TO BE USED ONLY WHEN SLIP FORM IS USED)

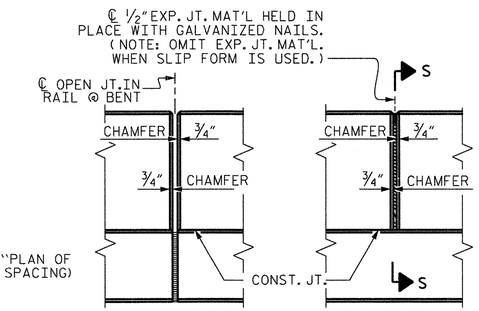

ELEVATION AT EXPANSION JOINTS

BILL OF MATERIAL FOR VERTICAL CONCRETE BARRIER RAIL						
BAR	BARS PER PAIR OF EXTERIOR UNITS 55' UNIT	TOTAL NO.	SIZE	TYPE	LENGTH	WEIGHT
✳B14	80	80	#5	STR	15'-6"	1293
✳ S4	128	128	#5	2	7'-2"	957
✳EPOXY COATED REINFORCING STEEL				LBS.		2250
CLASS AA CONCRETE				CU.YDS.		14.4
TOTAL VERTICAL CONCRETE BARRIER RAIL				LN. FT.		110.29

BILL OF MATERIAL FOR ONE 55' CORED SLAB UNIT							
				EXTERIOR UNIT		INTERIOR UNIT	
BAR	NUMBER	SIZE	TYPE	LENGTH	WEIGHT	LENGTH	WEIGHT
B7	4	#4	STR	28'-2"	75	28'-2"	75
S1	8	#5	3	4'-6"	38	4'-6"	38
S2	112	#4	3	5'-4"	399	5'-4"	399
✳ S3	64	#5	1	6'-2"	412		
S5	4	#4	3	5'-5"	14	5'-5"	14
S6	4	#4	3	5'-6"	15	5'-6"	15
S7	4	#4	3	5'-7"	15	5'-7"	15
S8	4	#4	3	5'-9"	15	5'-9"	15
REINFORCING STEEL			LBS.		571		571
✳EPOXY COATED REINFORCING STEEL			LBS.		412		
6500 P.S.I. CONCRETE			CU. YDS.		8.0		8.0
0.6"Ø L.R. STRANDS			No.		19		19

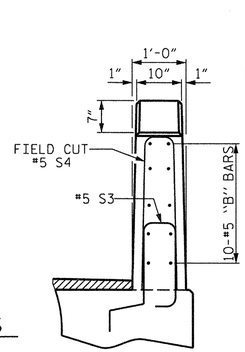

END VIEW

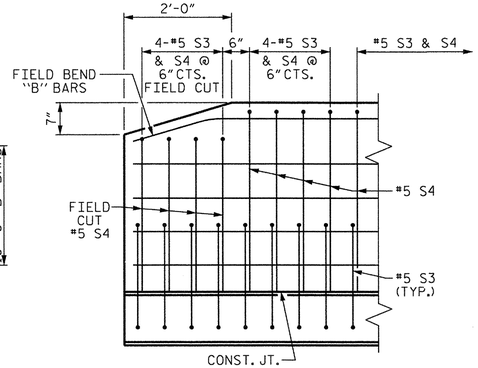

SIDE VIEW

END OF RAIL DETAILS

GUTTERLINE ASPHALT THICKNESS & RAIL HEIGHT			
27'-10" CLEAR ROADWAY	ASPHALT OVERLAY THICKNESS		RAIL HEIGHT
55' UNITS			
	LEFT GUTTERLINE	RIGHT GUTTERLINE	
EB1 @ ℄ BRG.	4 13/16"	6 11/16"	4'-1"
@ MID-SPAN	2 1/8"	2 1/8"	3'-8½"
EB2 @ ℄ BRG.	6 7/16"	4 1/16"	4'-1"

DEAD LOAD DEFLECTION AND CAMBER	
	3'-0" x 1'-9"
55' CORED SLAB UNIT	0.6"Ø L.R. STRAND
CAMBER (SLAB ALONE IN PLACE)	2½" ↑
DEFLECTION DUE TO SUPERIMPOSED DEAD LOAD ✳✳	¼" ↓
FINAL CAMBER	2¼" ↑

✳✳ INCLUDES FUTURE WEARING SURFACE

PROJECT NO. 17BP.14.R.5
HAYWOOD COUNTY
STATION: 13+34.60 -L-

SHEET 5 OF 5

STATE OF NORTH CAROLINA
DEPARTMENT OF TRANSPORTATION
RALEIGH

STANDARD 3'-0" X 1'-9" PRESTRESSED CONCRETE CORED SLAB UNIT 120° SKEW

NORTH CAROLINA PROFESSIONAL SEAL 29112 ENGINEER RICHARD L. COFFMAN

DocuSigned by: Richard Coffman 8/4/2015
13822479E18C4DC...

THE LOUIS BERGER GROUP, Inc.
1001 Wade Avenue, Suite 400
Raleigh, NC 27605-3322
NC COA No. F-0840

REVISIONS						SHEET NO.
NO.	BY:	DATE:	NO.	BY:	DATE:	S-13
1			3			TOTAL SHEETS
2			4			20

STD. NO. 21"PCS3_30_120S

DRAWN BY: M. HOGAN DATE : AUG 2013
CHECKED BY: R. COFFMAN DATE : AUG 2013
DESIGN ENGINEER OF RECORD: R. COFFMAN DATE : NOV 2013

G:\OR Projects\OR1100 - NCDOT Group W\430350\Structures\430350_SD_PCS05.dgn
8/4/2015 1100_PDF_full.plt.cfg 1100_str.tbl

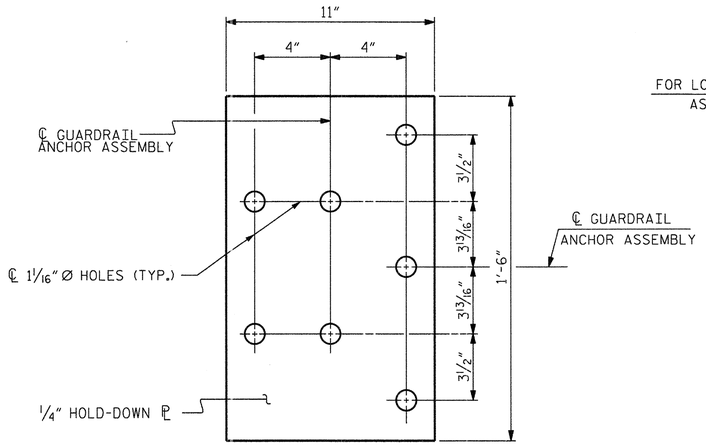

PLAN

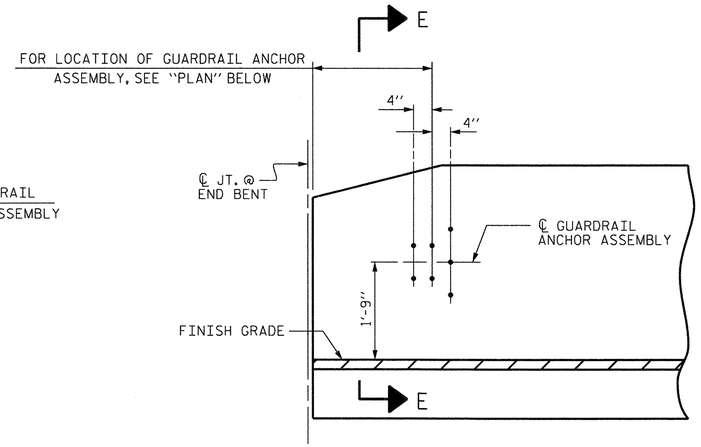

ELEVATION

NOTES

THE GUARDRAIL ANCHOR ASSEMBLY SHALL CONSIST OF A 1/4" HOLD DOWN PLATE AND 7 - 7/8" Ø BOLTS WITH NUTS AND WASHERS.

THE HOLD-DOWN PLATE SHALL CONFORM TO AASHTO M270 GRADE 36. AFTER FABRICATION, THE HOLD-DOWN PLATE SHALL BE HOT-DIP GALVANIZED IN ACCORDANCE WITH AASHTO M111.

BOLTS SHALL CONFORM TO THE REQUIREMENTS OF ASTM A307 AND NUTS SHALL CONFORM TO THE REQUIREMENTS OF AASHTO M291. BOLTS, NUTS AND WASHERS SHALL BE GALVANIZED. (AT THE CONTRACTOR'S OPTION, STAINLESS STEEL BOLTS, NUTS AND WASHERS MAY BE USED AS AN ALTERNATE FOR THE 7/8" Ø GALVANIZED BOLTS, NUTS AND WASHERS. THEY SHALL CONFORM TO OR EXCEED THE MECHANICAL REQUIREMENTS OF ASTM A307. THE USE OF THIS ALTERNATE SHALL BE APPROVED BY THE ENGINEER.)

THE GUARDRAIL ANCHOR ASSEMBLY IS REQUIRED AT ALL POINTS WHERE APPROACH GUARDRAIL IS TO BE ATTACHED TO THE END OF BARRIER RAIL. FOR POINTS OF ATTACHMENT, SEE SKETCH.

AFTER INSTALLATION, THE EXPOSED THREAD OF THE BOLT SHALL BE BURRED WITH A SHARP POINTED TOOL.

THE COST OF THE GUARDRAIL ANCHOR ASSEMBLY SHALL BE INCLUDED IN THE UNIT CONTRACT PRICE BID FOR VERTICAL CONCRETE BARRIER RAIL.

THE VERTICAL REINFORCING BARS MAY BE SHIFTED SLIGHTLY IN THE VERTICAL CONCRETE BARRIER RAIL TO CLEAR ASSEMBLY BOLTS.

THE 1 1/4" Ø HOLES SHALL BE FORMED OR DRILLED WITH A CORE BIT. IMPACT TOOLS WILL NOT BE PERMITTED. ANY CONCRETE DAMAGED BY THIS WORK SHALL BE REPAIRED TO THE SATISFACTION OF THE ENGINEER.

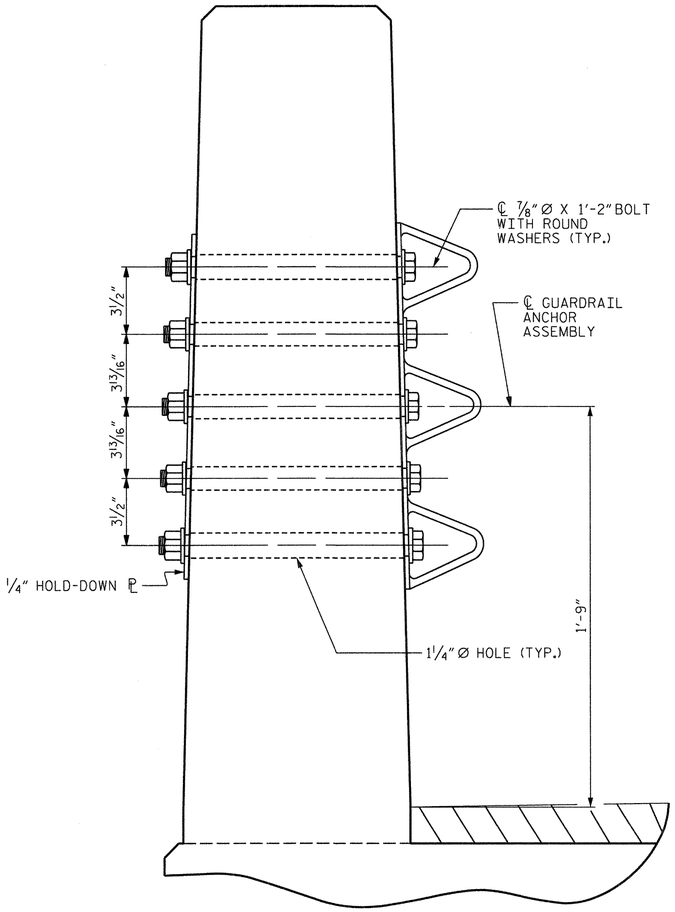

SECTION E-E

GUARDRAIL ANCHOR ASSEMBLY DETAILS

SKETCH SHOWING POINTS OF ATTACHMENT

*LOCATION OF GUARDRAIL ATTACHMENT

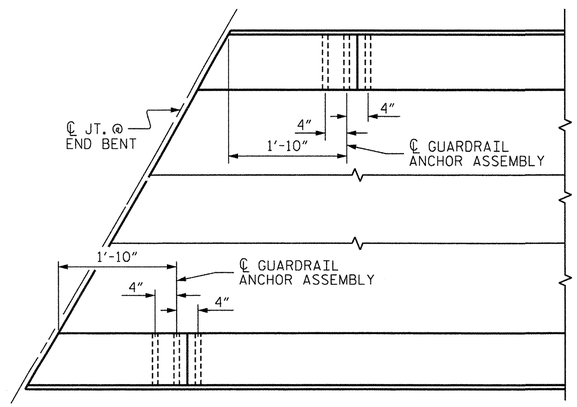

PLAN

LOCATION OF ANCHORS FOR GUARDRAIL

END BENT #1 SHOWN, END BENT #2 SIMILAR.

PROJECT NO. 17BP.14.R.5

HAYWOOD COUNTY

STATION: 13+34.60 -L-

NORTH CAROLINA PROFESSIONAL SEAL 29112 ENGINEER RICHARD L. COFFMAN

DocuSigned by: Richard Coffman 8/4/2015

13622479E18C4DC...

THE LOUIS BERGER GROUP, Inc.
1001 Wade Avenue, Suite 400
Raleigh, NC 27605-3322
NC COA No. F-0840

STATE OF NORTH CAROLINA
DEPARTMENT OF TRANSPORTATION
RALEIGH

STANDARD
GUARDRAIL ANCHORAGE FOR VERTICAL CONCRETE BARRIER RAIL

REVISIONS						SHEET NO.
NO.	BY:	DATE:	NO.	BY:	DATE:	S-14
1			3			TOTAL SHEETS
2			4			20

(SHT 2)

DRAWN BY: R. KNIGHT DATE : JUL 2012
CHECKED BY: S.COOK DATE : AUG 2012
DESIGN ENGINEER OF RECORD: R. COFFMAN DATE : NOV 2013

G:\OR Projects\OR1100 - NCDOT Group W\430350\Structures\430350_SD_GRA.DGN
1100_PDF_full.pltcfg 1100_str.tbl
8/4/2015

NOTES

STIRRUPS IN CAP MAY BE SHIFTED AS NECESSARY TO CLEAR DOWELS.

THE CONCRETE IN THE SHADED AREA OF THE WING SHALL BE POURED AFTER THE VERTICAL CONCRETE BARRIER RAIL IS CAST IF SLIP FORMING IS USED.

FOR PILE SPLICE DETAILS, SEE SHEET 4 OF 4.

FOR WING DETAILS, SEE SHEET 3 OF 4.

FOR MECHANICAL BUTT SPLICING FOR REINFORCING STEEL, SEE SECTION 425-5 OF THE STANDARD SPECIFICATIONS.

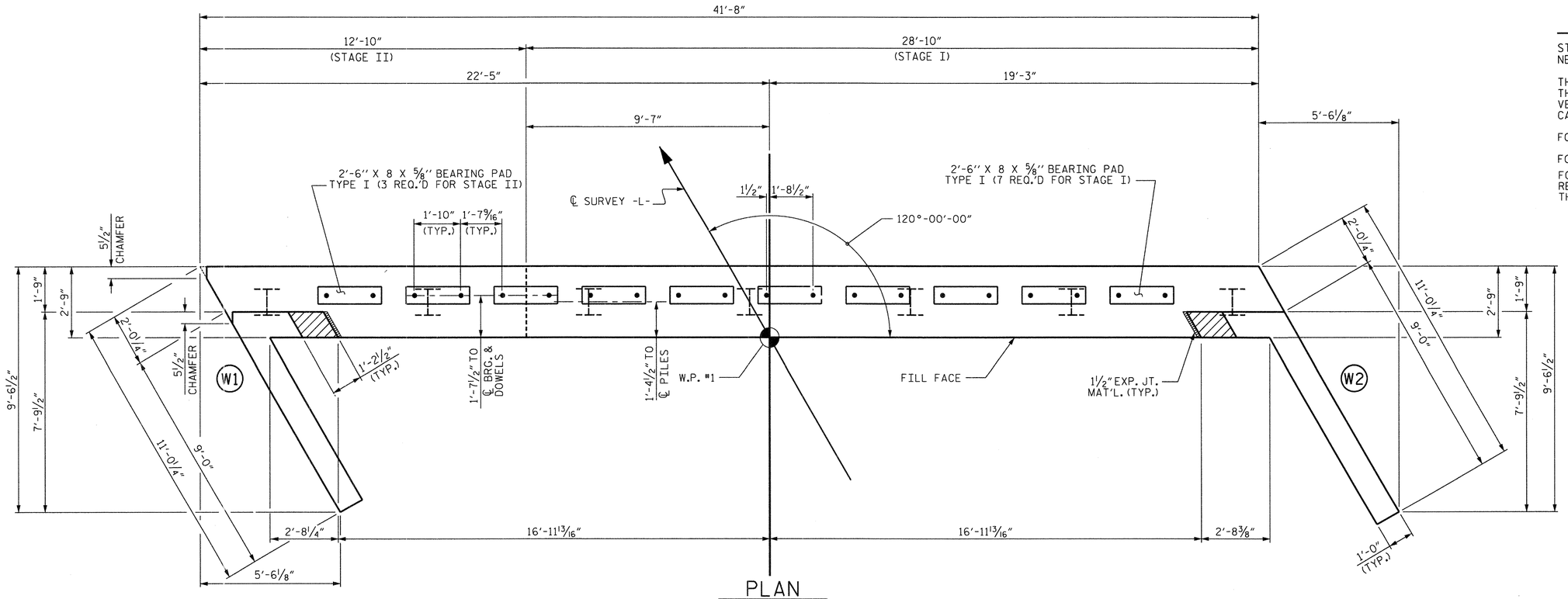

PLAN

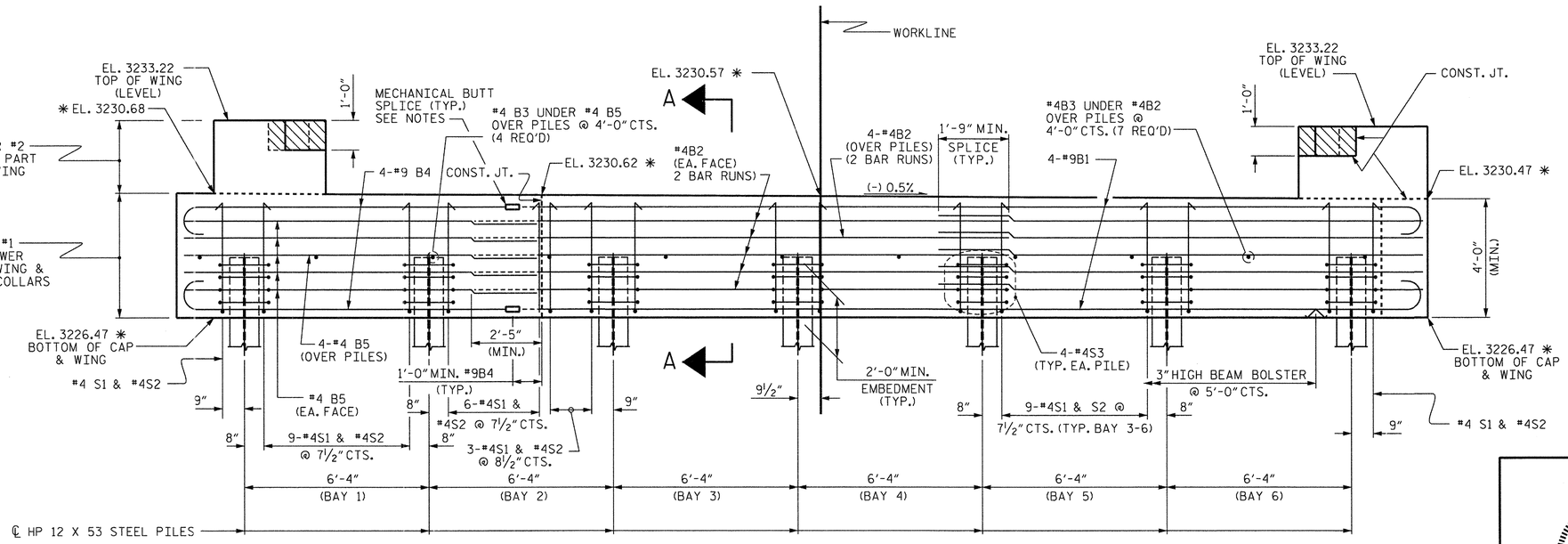

* ELEVATIONS ALONG FILL FACE

ELEVATION

WINGS NOT SHOWN FOR CLARITY.
FOR SECTION A-A, SEE SHEET 4 OF 4.
CONCRETE COLLARS FOR STEEL PILES NOT SHOWN IN PLAN AND ELEVATION VIEWS FOR CLARITY.
SEE "CORROSION PROTECTION FOR STEEL PILES DETAIL", SHEET 4 OF 4.

PROJECT NO. 17BP.14.R.5
HAYWOOD COUNTY
STATION: 13+34.60 -L-

SHEET 1 OF 4

DRAWN BY: R. KNIGHT DATE : JAN 2013
CHECKED BY: R. COFFMAN DATE : AUG 2013
DESIGN ENGINEER OF RECORD: R. COFFMAN DATE : NOV 2013

NORTH CAROLINA PROFESSIONAL SEAL 29112 ENGINEER RICHARD L. COFFMAN

DocuSigned by: Richard Coffman 8/4/2015

THE LOUIS BERGER GROUP, Inc.
1001 Wade Avenue, Suite 400
Raleigh, NC 27605-3322
NC COA No. F-0840

STATE OF NORTH CAROLINA
DEPARTMENT OF TRANSPORTATION
RALEIGH

SUBSTRUCTURE

END BENT No. 1

REVISIONS						SHEET NO.
NO.	BY:	DATE:	NO.	BY:	DATE:	S-15
1			3			TOTAL SHEETS
2			4			20

STD. NO. EB 30 12054

G:\OR Projects\OR1100 - NCDOT Group W\430350\Structures\430350_SD_EB101.DGN
8/4/2015 1100_PDF_full.pltcfg 1100_str.tbl

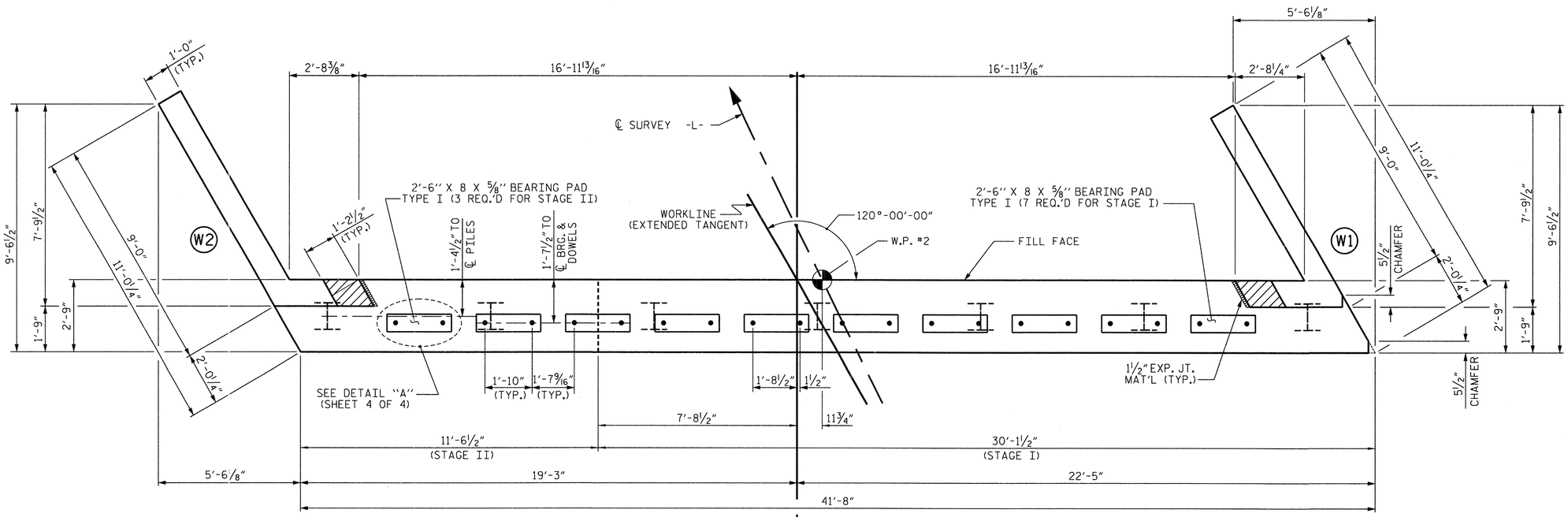

PLAN

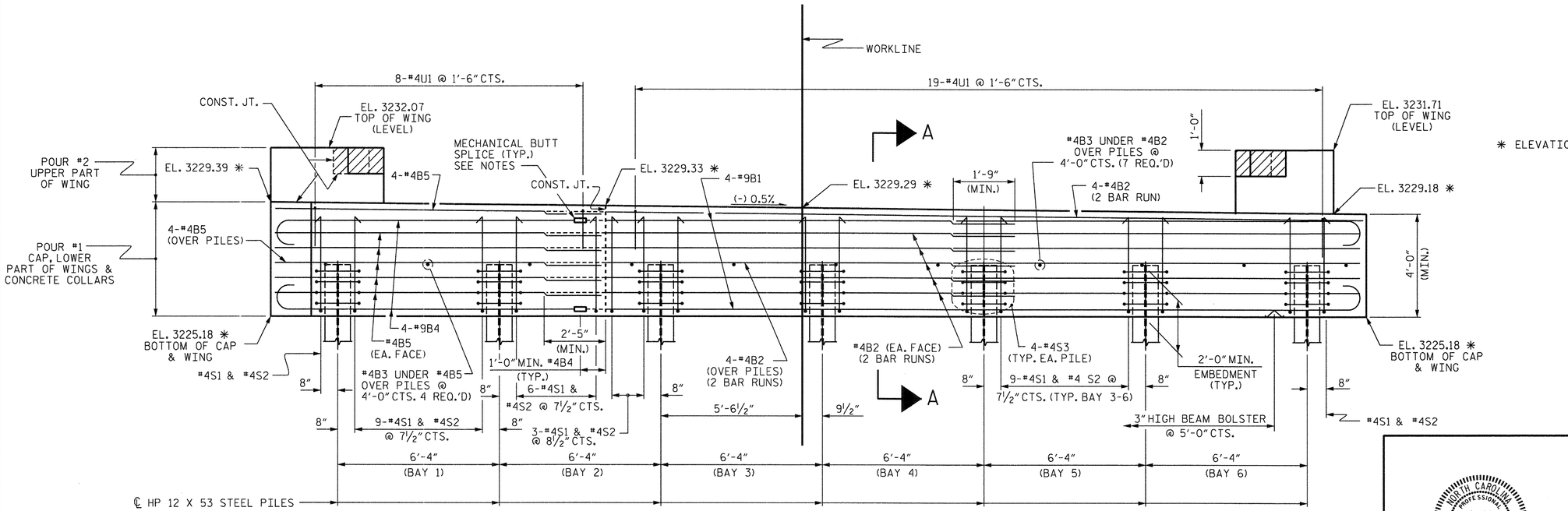

ELEVATION

WINGS NOT SHOWN FOR CLARITY.
FOR SECTION A-A, SEE SHEET 4 OF 4.
CONCRETE COLLARS FOR STEEL PILES NOT SHOWN IN PLAN AND ELEVATION VIEWS FOR CLARITY.
SEE "CORROSION PROTECTION FOR STEEL PILES DETAIL", SHEET 4 OF 4.

NOTES

STIRRUPS IN CAP MAY BE SHIFTED AS NECESSARY TO CLEAR DOWELS.

THE CONCRETE IN THE SHADED AREA OF THE WING SHALL BE POURED AFTER THE VERTICAL CONCRETE BARRIER RAIL IS CAST IF SLIP FORMING IS USED.

FOR PILE SPLICE DETAILS, SEE SHEET 4 OF 4.

FOR WING DETAILS, SEE SHEET 3 OF 4.

FOR MECHANICAL BUTT SPLICING FOR REINFORCING STEEL, SEE SECTION 425-5 OF THE STANDARD SPECIFICATIONS.

PROJECT NO. 17BP.14.R.5
HAYWOOD COUNTY
STATION: 13+34.60 -L-
SHEET 2 OF 4

DRAWN BY: R. KNIGHT DATE : JAN 2103
CHECKED BY: R. COFFMAN DATE : AUG 2013
DESIGN ENGINEER OF RECORD: R. COFFMAN DATE : NOV 2013

NORTH CAROLINA PROFESSIONAL SEAL 29112 ENGINEER RICHARD L. COFFMAN

DocuSigned by: Richard Coffman 8/4/2015
13822478F18C4DC...

THE LOUIS BERGER GROUP, Inc.
1001 Wade Avenue, Suite 400
Raleigh, NC 27605-3322
NC COA No. F-0840

STATE OF NORTH CAROLINA
DEPARTMENT OF TRANSPORTATION
RALEIGH

SUBSTRUCTURE

END BENT No. 2

REVISIONS						SHEET NO.
NO.	BY:	DATE:	NO.	BY:	DATE:	S-16
1			3			TOTAL SHEETS
2			4			20

STD. NO. EB 30 12054

G:\OR Projects\OR1100 - NCDOT Group W\430350\Structures\430350_SD_EB102.DGN
8/4/2015 1100_PDF_full.pltcfg 1100_str.tbl

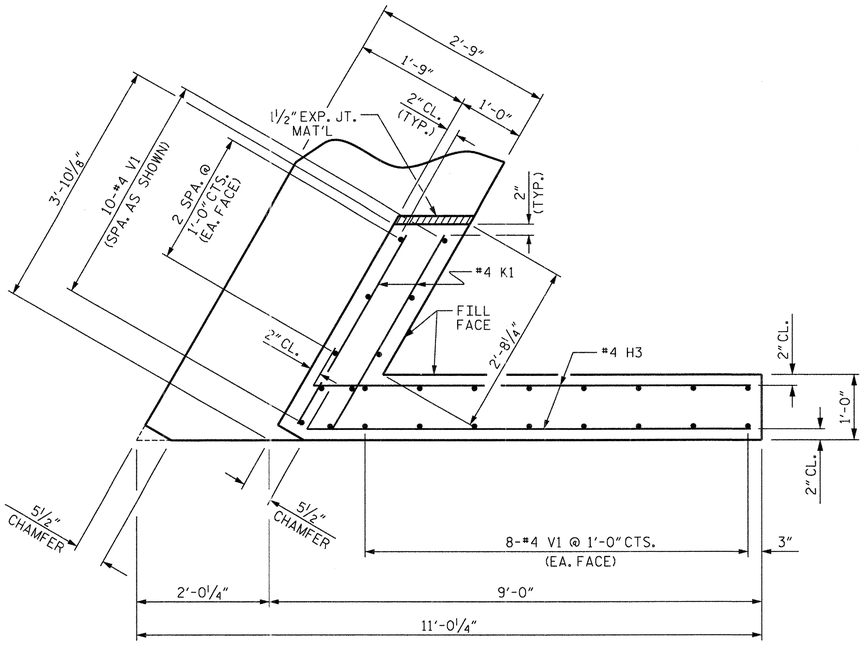

PLAN OF WING (W1)

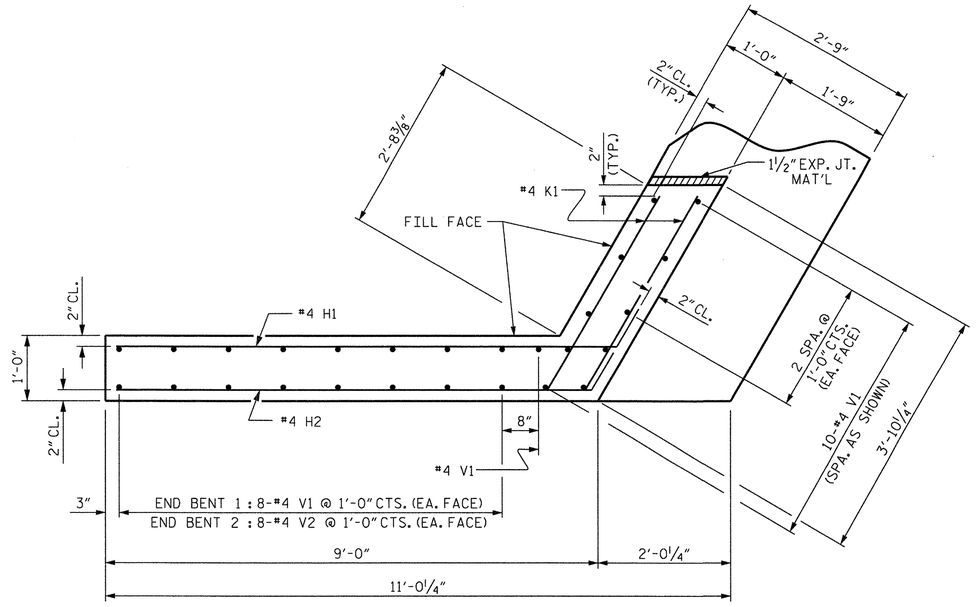

PLAN OF WING (W2)

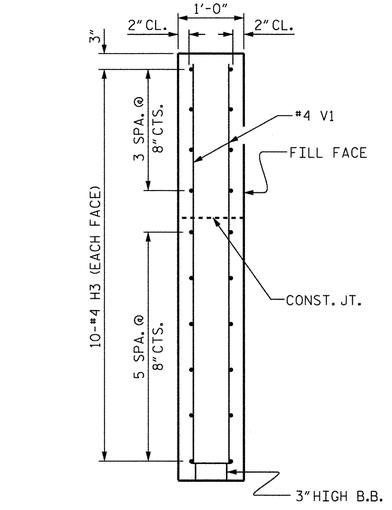

SECTION X-X

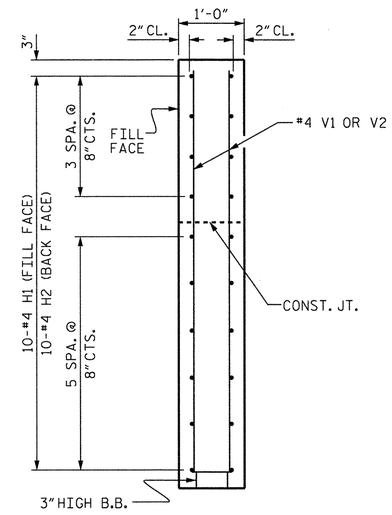

SECTION Y-Y

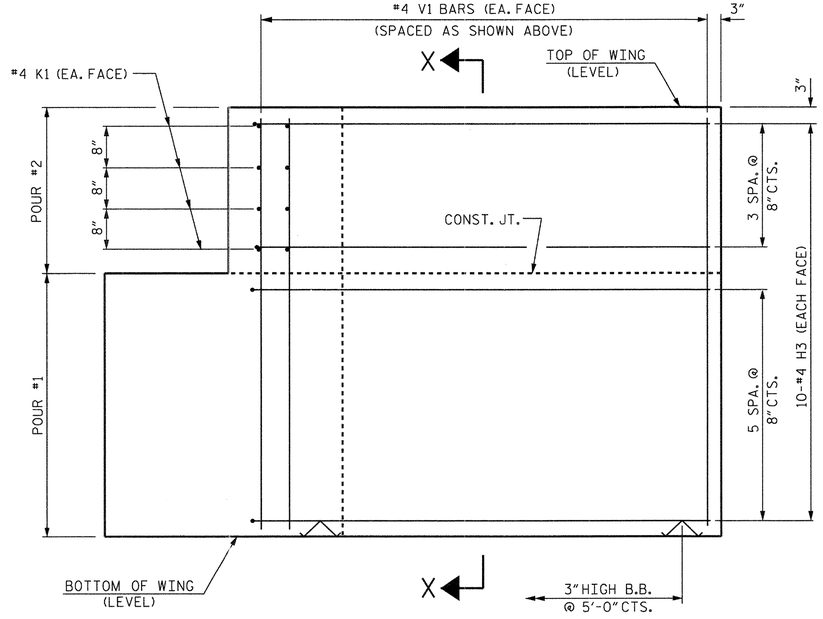

ELEVATION OF WING (W1)

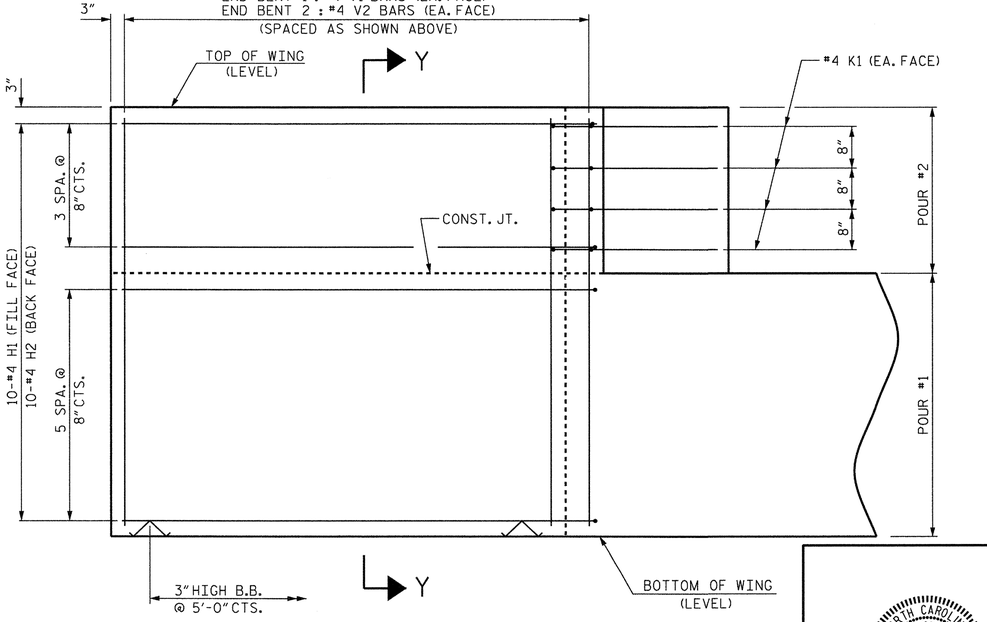

ELEVATION OF WING (W2)

WING DETAILS

PROJECT NO. 17BP.14.R.5

HAYWOOD COUNTY

STATION: 13+34.60 -L-

SHEET 3 OF 4

DRAWN BY:	R. KNIGHT	DATE :	JAN 2013
CHECKED BY:	R. COFFMAN	DATE :	AUG 2013
DESIGN ENGINEER OF RECORD:	R. COFFMAN	DATE :	NOV 2013

NORTH CAROLINA PROFESSIONAL SEAL 29112 ENGINEER RICHARD L. COFFMAN

DocuSigned by: Richard Coffman 8/4/2015

13822479F18C4DC...

THE LOUIS BERGER GROUP, Inc.
1001 Wade Avenue, Suite 400
Raleigh, NC 27605-3322
NC COA No. F-0840

STATE OF NORTH CAROLINA
DEPARTMENT OF TRANSPORTATION
RALEIGH

SUBSTRUCTURE
END BENT
WING DETAILS

REVISIONS						SHEET NO.
NO.	BY:	DATE:	NO.	BY:	DATE:	S-17
1			3			TOTAL SHEETS
2			4			20

STD NO. EB 30 12054

G:\OR Projects\OR1100 - NCDOT Group W\430350\Structures\430350_SD_EB103.DGN
8/4/2015 1100_PDF_full.pltcfg 1100_str.tbl

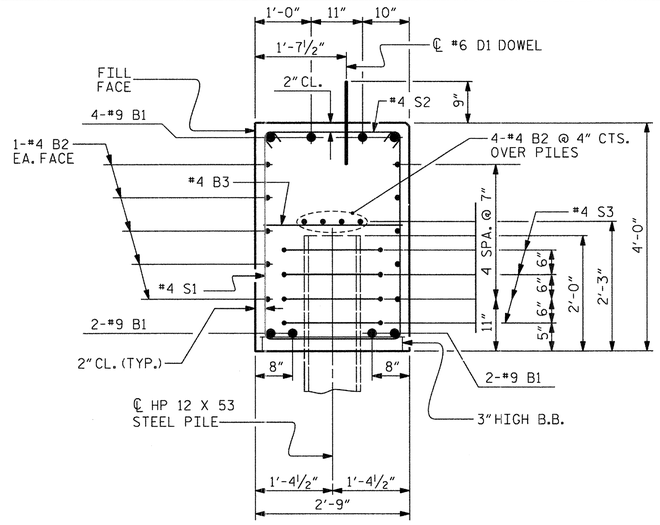

SECTION A-A

(CONCRETE COLLAR NOT SHOWN FOR CLARITY. SEE "CORROSION PROTECTION FOR STEEL PILES DETAIL.")

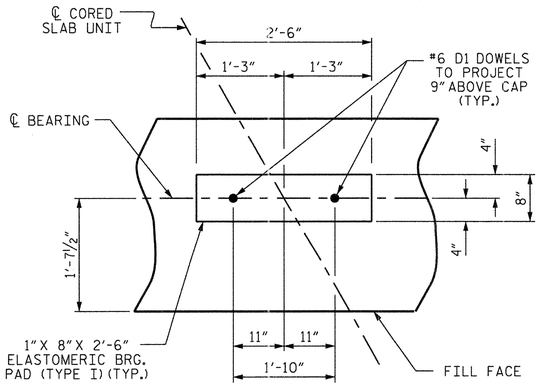

DETAIL "A"

(END BENT No. 1 SHOWN, END BENT No. 2 SIMILAR BY ROTATION)

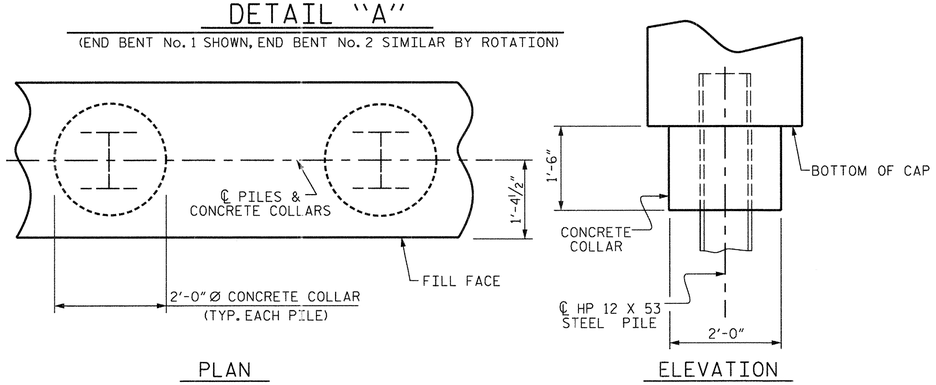

CORROSION PROTECTION FOR STEEL PILES DETAIL

(END BENT No. 1 SHOWN, END BENT No. 2 SIMILAR BY ROTATION)

BAR TYPES

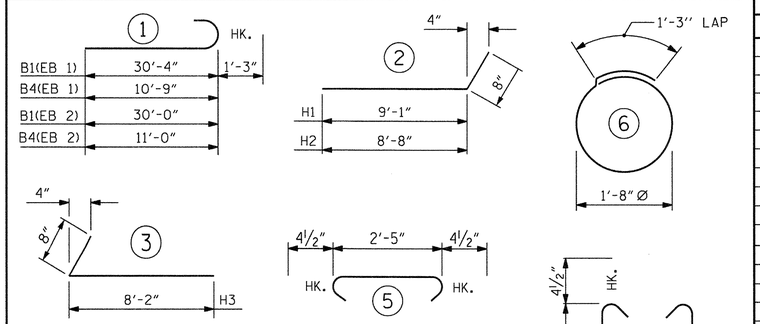

ALL BAR DIMENSIONS ARE OUT TO OUT.

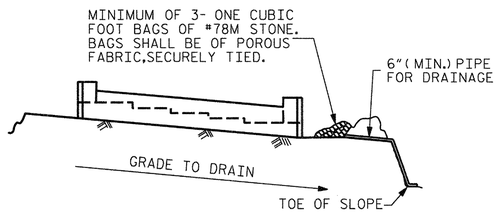

BAGGED STONE AND PIPE SHALL BE PLACED IMMEDIATELY AFTER COMPLETION OF END BENT EXCAVATION. PIPE MAY BE EITHER CONCRETE, CORRUGATED STEEL, CORRUGATED ALUMINUM ALLOY, OR CORRUGATED PLASTIC. PERFORATED PIPE WILL NOT BE ALLOWED.

BAGGED STONE SHALL REMAIN IN PLACE UNTIL THE ENGINEER DIRECTS THAT IT BE REMOVED. THE CONTRACTOR SHALL REMOVE AND DISPOSE OF SILT ACCUMULATIONS AT BAGGED STONE WHEN SO DIRECTED BY THE ENGINEER. BAGS SHALL BE REMOVED AND REPLACED WHENEVER THE ENGINEER DETERMINES THAT THEY HAVE DETERIORATED AND LOST THEIR EFFECTIVENESS.

NO SEPARATE PAYMENT WILL BE MADE FOR THIS WORK AND THE ENTIRE COST OF THIS WORK SHALL BE INCLUDED IN THE UNIT CONTRACT PRICE BID FOR THE SEVERAL PAY ITEMS.

TEMPORARY DRAINAGE AT END BENT

END BENT No. 1
HP 12 X 53 STEEL PILES
NO: 7 LIN. FT.= 210.0

END BENT No. 2
HP 12 X 53 STEEL PILES
NO: 7 LIN. FT.= 70.0

BILL OF MATERIAL-END BENT 1

STAGE I

BAR	NO.	SIZE	TYPE	LENGTH	WEIGHT
B1	8	#9	1	31'-7"	859
B2	28	#4	STR	17'-0"	318
B3	8	#4	STR	2'-5"	13
D1	15	#6	STR	1'-6"	34
H1	10	#4	2	9'-9"	65
H2	10	#4	2	9'-4"	62
K1	8	#4	STR	3'-3"	17
S1	40	#4	4	10'-5"	278
S2	40	#4	5	3'-2"	85
S3	20	#4	6	6'-6"	87
V1	27	#4	STR	6'-3"	113

REINFORCING STEEL 1931 LBS.

CLASS A CONCRETE BREAK DOWN
POUR #1 CAP, LOWER PART OF WING & COLLARS 14.1 C.Y.
POUR #2 UPPER PART OF WING 1.0 C.Y.
TOTAL CLASS A CONCRETE 15.1 C.Y.

STAGE II

BAR	NO.	SIZE	TYPE	LENGTH	WEIGHT
B3	3	#4	STR	2'-5"	5
B4	8	#9	1	12'-0"	326
B5	14	#4	STR	11'-0"	103
D1	5	#6	STR	1'-6"	11
H3	20	#4	3	8'-10"	118
K1	8	#4	STR	3'-3"	17
S1	16	#4	4	10'-5"	111
S2	16	#4	5	3'-2"	34
S3	8	#4	6	6'-6"	35
V1	26	#4	STR	6'-3"	109

REINFORCING STEEL 869 LBS.

CLASS A CONCRETE BREAKDOWN
POUR #1 CAP, LOWER PART OF WING & COLLARS 6.4 C.Y.
POUR #2 UPPER PART OF WING 1.0 C.Y.
TOTAL CLASS A CONCRETE 7.4 C.Y.

BILL OF MATERIAL-END BENT 2

STAGE I

BAR	NO.	SIZE	TYPE	LENGTH	WEIGHT
B1	8	#9	1	31'-3"	850
B2	36	#4	STR	17'-0"	409
B3	8	#4	STR	2'-5"	13
D1	15	#6	STR	1'-6"	34
H1	10	#4	2	9'-9"	65
H2	10	#4	2	9'-4"	62
K1	8	#4	STR	3'-3"	17
S1	40	#4	4	10'-5"	278
S2	40	#4	5	3'-2"	85
S3	20	#4	6	6'-6"	87
U1	19	#4	STR	5'-5"	69
V1	27	#4	STR	6'-3"	113

REINFORCING STEEL 2082 LBS.

CLASS A CONCRETE BREAK DOWN
POUR #1 CAP, LOWER PART OF WING & COLLARS 14.4 C.Y.
POUR #2 UPPER PART OF WING 1.0 C.Y.
TOTAL CLASS A CONCRETE 15.4 C.Y.

STAGE II

BAR	NO.	SIZE	TYPE	LENGTH	WEIGHT
B3	3	#4	STR	2'-5"	5
B4	8	#9	STR	12'-3"	333
B5	18	#4	STR	11'-0"	132
D1	5	#6	STR	1'-6"	11
H3	20	#4	3	8'-10"	118
K1	8	#4	STR	3'-3"	17
S1	16	#4	4	10'-5"	111
S2	16	#4	5	3'-2"	34
S3	8	#4	6	6'-6"	35
U1	8	#4	7	5'-5"	29
V1	11	#4	STR	6'-3"	46
V2	16	#4	STR	6'-7"	70

REINFORCING STEEL 941 LBS.

CLASS A CONCRETE BREAKDOWN
POUR #1 CAP, LOWER PART OF WING & COLLARS 6.8 C.Y.
POUR #2 UPPER PART OF WING 1.0 C.Y.
TOTAL CLASS A CONCRETE 7.8 C.Y.

TOTAL BILL OF MATERIAL END BENT 1

REINFORCING STEEL	
STAGE I	1931 LBS.
STAGE II	869 LBS.
TOTAL REINFORCING STEEL	2800 LBS.
CLASS A CONCRETE	
STAGE I	15.1 C.Y.
STAGE II	7.4 C.Y.
TOTAL CLASS A CONCRETE	22.5 C.Y.

TOTAL BILL OF MATERIAL END BENT 2

REINFORCING STEEL	
STAGE I	2082 LBS.
STAGE II	941 LBS.
TOTAL REINFORCING STEEL	3023 LBS.
CLASS A CONCRETE	
STAGE I	15.4 C.Y.
STAGE II	7.8 C.Y.
TOTAL CLASS A CONCRETE	23.2 C.Y.

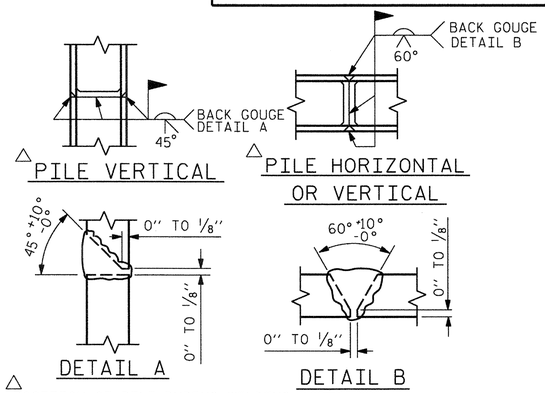

△ POSITION OF PILE DURING WELDING.

PILE SPLICE DETAILS

PROJECT NO. 17BP.14.R.5
HAYWOOD COUNTY
STATION: 13+34.60 -L-

SHEET 4 OF 4

NORTH CAROLINA PROFESSIONAL SEAL 29112 ENGINEER RICHARD L COFFMAN

DocuSigned by: Richard Coffman 8/4/2015
13B2247BE18C4DC...

THE LOUIS BERGER GROUP, Inc.
1001 Wade Avenue, Suite 400
Raleigh, NC 27605-3322
NC COA No. F-0840

STATE OF NORTH CAROLINA
DEPARTMENT OF TRANSPORTATION
RALEIGH

SUBSTRUCTURE

END BENT No. 1 & 2 DETAILS

REVISIONS						SHEET NO.
NO.	BY:	DATE:	NO.	BY:	DATE:	S-18
1			3			TOTAL SHEETS
2			4			20

DRAWN BY: R. KNIGHT DATE : JAN 2013
CHECKED BY: R. COFFMAN DATE : AUG 2013
DESIGN ENGINEER OF RECORD: R. COFFMAN DATE : NOV 2013

G:\OR Projects\OR1100 - NCDOT Group W\430350\Structures\430350_SD_EB104.DGN
8/4/2015 1100_str.tbl
1100_PDF_full.pltcfg

STD. NO. EB 30 12DS4

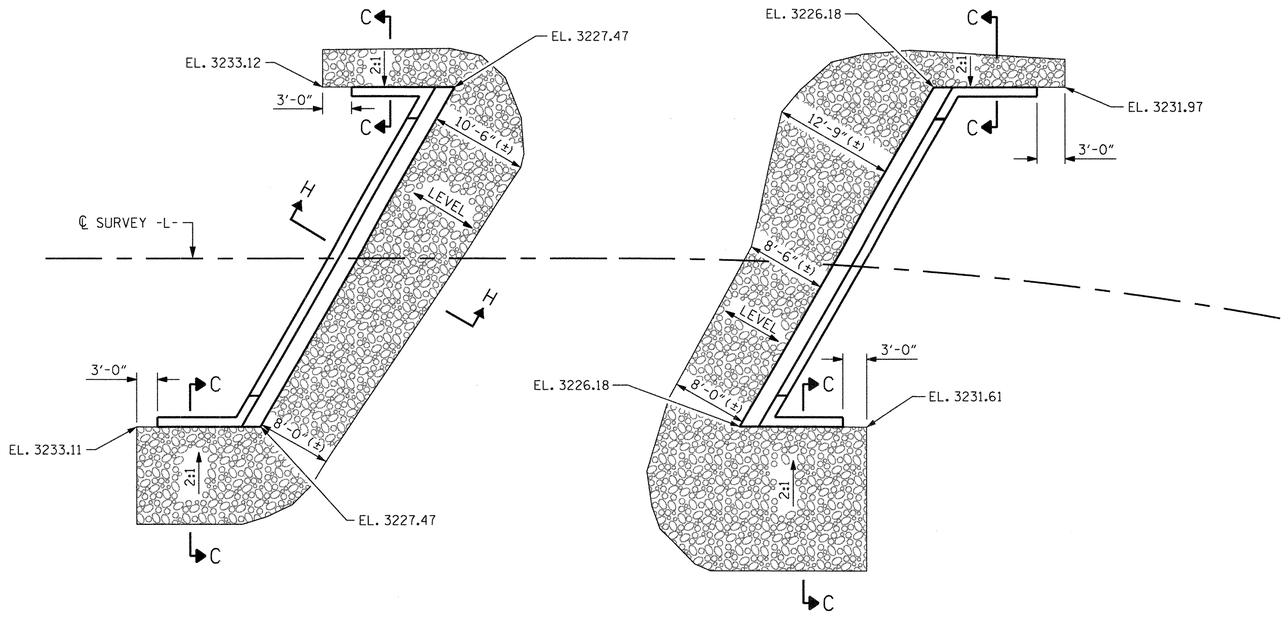

ESTIMATED QUANTITIES		
BRIDGE @ STA. 13+34.60 -L-	RIP RAP CLASS II (2'-0" THICK)	GEOTEXTILE FOR DRAINAGE
	TONS	SQUARE YARDS
END BENT 1	92	102
END BENT 2	125	139

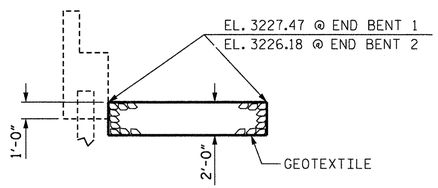

SECTION H-H

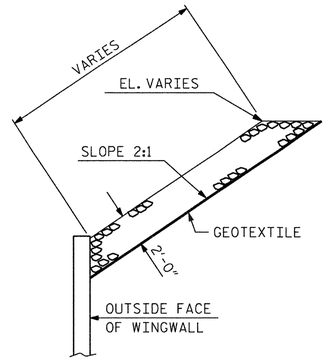

SECTION C-C

PROJECT NO. 17BP.14.R.5

HAYWOOD COUNTY

STATION: 13+34.60 -L-

NORTH CAROLINA PROFESSIONAL SEAL 29112 ENGINEER RICHARD L. COFFMAN

DocuSigned by: Richard Coffman 8/4/2015
13822479F18C4DC...

THE LOUIS BERGER GROUP, Inc.
1001 Wade Avenue, Suite 400
Raleigh, NC 27605-3322
NC COA No. F-0840

STATE OF NORTH CAROLINA
DEPARTMENT OF TRANSPORTATION
RALEIGH

STANDARD

RIP RAP DETAILS

REVISIONS						SHEET NO.
NO.	BY:	DATE:	NO.	BY:	DATE:	S-19
1			3			TOTAL SHEETS
2			4			20

ASSEMBLED BY : R. KNIGHT		DATE : OCT 2013
CHECKED BY : R. COFFMAN		DATE : NOV 2013
ENGINEER OF RECORD : R. COFFMAN		DATE : NOV 2013
DRAWN BY : REK 1/84	REV. 5/1/06R	TLA/GM
CHECKED BY : RDU 1/84	REV. 10/1/11	MAA/GM
	REV. 12/21/11	MAA/GM

STD. NO. RR1

G:\OR Projects\OR1100 - NCDOT Group W\430350\Structures\430350_SD_RR.DGN
8/4/2015 1100_PDF_full.pltcfg 1100_str.tbl

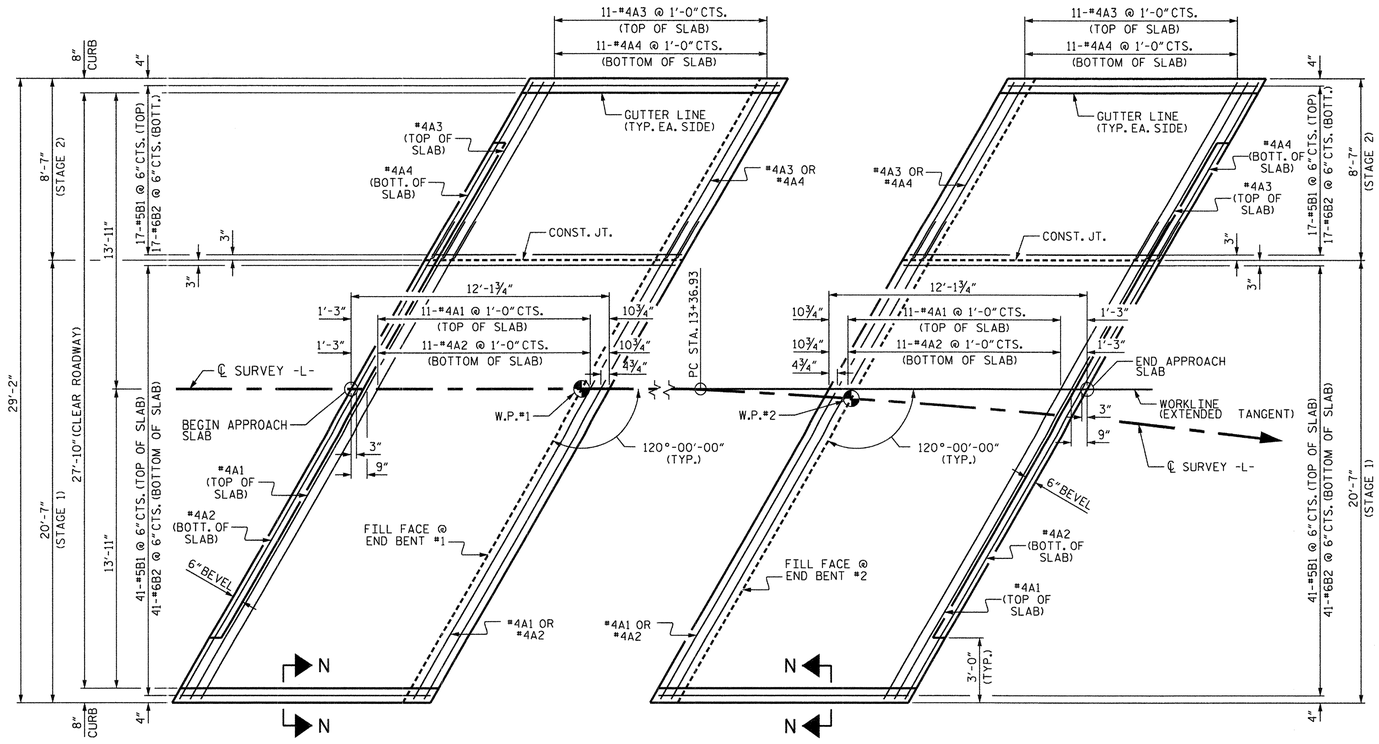

PLAN @ END BENT #1

PLAN @ END BENT #2

DIMENSIONS SHOWN ARE TYPICAL FOR BOTH APPROACH SLABS

SPLICE LENGTHS		
BAR SIZE	EPOXY COATED	UNCOATED
#4	2'-0"	1'-9"
#5	2'-6"	2'-2"
#6	3'-10"	2'-7"

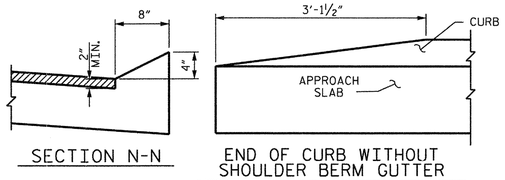

SECTION N-N

END OF CURB WITHOUT SHOULDER BERM GUTTER

CURB DETAILS

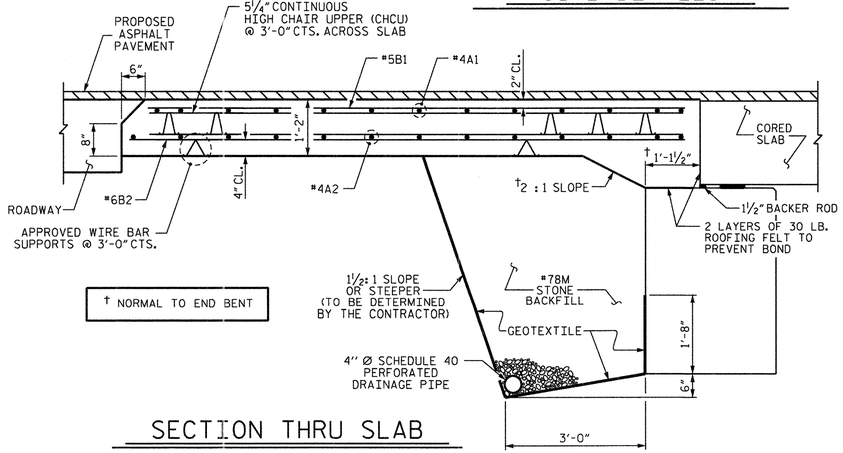

SECTION THRU SLAB

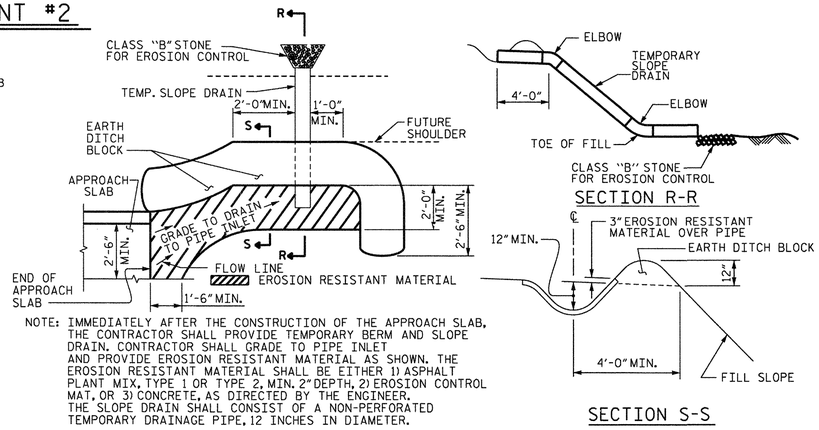

NOTE: IMMEDIATELY AFTER THE CONSTRUCTION OF THE APPROACH SLAB, THE CONTRACTOR SHALL PROVIDE TEMPORARY BERM AND SLOPE DRAIN. CONTRACTOR SHALL GRADE TO PIPE INLET AND PROVIDE EROSION RESISTANT MATERIAL AS SHOWN. THE EROSION RESISTANT MATERIAL SHALL BE EITHER 1) ASPHALT PLANT MIX, TYPE 1 OR TYPE 2, MIN. 2" DEPTH, 2) EROSION CONTROL MAT, OR 3) CONCRETE, AS DIRECTED BY THE ENGINEER. THE SLOPE DRAIN SHALL CONSIST OF A NON-PERFORATED TEMPORARY DRAINAGE PIPE, 12 INCHES IN DIAMETER.

PLAN VIEW

SECTION S-S

TEMPORARY BERM AND SLOPE DRAIN DETAILS

(TO BE USED WHEN SHOULDER BERM GUTTER IS REQUIRED)

BILL OF MATERIAL

APP. SLB. AT EB #1 (STAGE 1)

BAR	NO.	SIZE	TYPE	LENGTH	WEIGHT
✱ A1	13	#4	STR	25'-9"	224
A2	14	#4	STR	25'-9"	241
✱ B1	41	#5	STR	11'-2"	478
B2	41	#6	STR	11'-9"	724
REINFORCING STEEL				LBS.	965
✱ EPOXY COATED REINFORCING STEEL				LBS.	702
CLASS AA CONCRETE				C. Y.	11.5

APP. SLB. AT EB #1 (STAGE 2)

BAR	NO.	SIZE	TYPE	LENGTH	WEIGHT
✱ A3	13	#4	STR	9'-7"	83
A4	14	#4	STR	9'-7"	90
✱ B1	17	#5	STR	11'-2"	198
B2	17	#6	STR	11'-9"	300
REINFORCING STEEL				LBS.	390
✱ EPOXY COATED REINFORCING STEEL				LBS.	281
CLASS AA CONCRETE				C. Y.	4.8

APP. SLB. AT EB #2 (STAGE 1)

BAR	NO.	SIZE	TYPE	LENGTH	WEIGHT
✱ A1	13	#4	STR	25'-9"	224
A2	14	#4	STR	25'-9"	241
✱ B1	41	#5	STR	11'-2"	478
B2	41	#6	STR	11'-9"	724
REINFORCING STEEL				LBS.	965
✱ EPOXY COATED REINFORCING STEEL				LBS.	702
CLASS AA CONCRETE				C. Y.	11.5

APP. SLB. AT EB #2 (STAGE 2)

BAR	NO.	SIZE	TYPE	LENGTH	WEIGHT
✱ A3	13	#4	STR	9'-7"	83
A4	14	#4	STR	9'-7"	90
✱ B1	17	#5	STR	11'-2"	198
B2	17	#6	STR	11'-9"	300
REINFORCING STEEL				LBS.	390
✱ EPOXY COATED REINFORCING STEEL				LBS.	281
CLASS AA CONCRETE				C. Y.	4.8

NOTES

FOR BRIDGE APPROACH FILL INCLUDING GEOTEXTILE, 4" Ø DRAINAGE PIPE, AND #78M STONE BACKFILL, SEE ROADWAY PLANS.

GEOTEXTILE SHALL BE TYPE 1IN ACCORDANCE WITH THE STANDARD SPECIFICATIONS SECTION 1056.

#78M STONE BACKFILL (CLASS V SELECT MATERIAL) SHALL BE IN ACCORDANCE WITH STANDARD SPECIFICATIONS SECTION 1016.

#78M STONE BACKFILL IS TO BE CONTINUOUS ALONG FILL FACE OF BACKWALL FROM OUTSIDE EDGE TO OUTSIDE EDGE OF APPROACH SLAB.

FOR THE 4" Ø DRAINAGE PIPE OUTLET(S), SEE ROADWAY STANDARD DRAWINGS.

AREA BETWEEN THE WINGWALL AND APPROACH SLAB SHALL BE GRADED TO DRAIN THE WATER AWAY FROM THE FILL FACE OF THE BRIDGE AND SHALL BE PAVED. SEE ROADWAY PLANS.

APPROACH SLAB GROOVING IS NOT REQUIRED.

4" PERFORATED PIPE OUTFALL SHALL BE ABOVE THE WATER SURFACE ELEVATION.

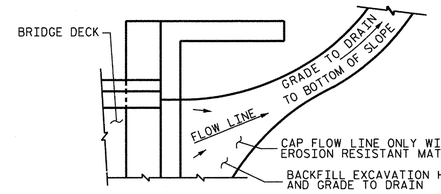

NOTE: IF THE APPROACH SLAB IS NOT CONSTRUCTED IMMEDIATELY AFTER THE BACKFILLING OF THE END BENT EXCAVATION, GRADE TO DRAIN TO THE BOTTOM OF THE SLOPE AND PROVIDE EROSION RESISTANT MATERIAL, SUCH AS FIBERGLASS ROVING OR AS DIRECTED BY THE ENGINEER TO PREVENT SOIL EROSION AND TO PROTECT THE AREA ADJACENT TO THE STRUCTURE. THE CONTRACTOR WILL BE REQUIRED TO REMOVE THESE MATERIALS PRIOR TO CONSTRUCTION OF THE APPROACH SLAB.

TEMPORARY DRAINAGE DETAIL

PROJECT NO. 17BP.14.R.5

HAYWOOD COUNTY

STATION: 13+34.60 -L-

DRAWN BY: M. HOGAN DATE : FEB 2013

CHECKED BY: R. COFFMAN DATE : AUG 2013

DESIGN ENGINEER OF RECORD: R. COFFMAN DATE : NOV 2013

NORTH CAROLINA PROFESSIONAL SEAL 29112 ENGINEER RICHARD L. COFFMAN

DocuSigned by: Richard Coffman 8/4/2015

13822479F18C4DC...

THE LOUIS BERGER GROUP, Inc.
1001 Wade Avenue, Suite 400
Raleigh, NC 27605-3322
NC COA No. F-0840

STATE OF NORTH CAROLINA
DEPARTMENT OF TRANSPORTATION
RALEIGH

STANDARD BRIDGE APPROACH SLAB FOR PRESTRESSED CONCRETE CORED SLAB UNIT (SUB-REGIONAL TIER) 120° SKEW

REVISIONS						SHEET NO.
NO.	BY:	DATE:	NO.	BY:	DATE:	S-20
1			3			TOTAL SHEETS
2			4			20

STD. NO. BAS 30 120S

G:\OR Projects\OR1100 - NCDOT Group W\430350\Structures\430350_SD_AS.DGN
8/4/2015 1100_PDF_full.pltcfg 1100_str.tbl

STANDARD NOTES

DESIGN DATA:

SPECIFICATIONS	A.A.S.H.T.O. (CURRENT)
LIVE LOAD	SEE PLANS
IMPACT ALLOWANCE	SEE A.A.S.H.T.O.
STRESS IN EXTREME FIBER OF	
STRUCTURAL STEEL - AASHTO M270 GRADE 36	20,000 LBS. PER SQ. IN.
- AASHTO M270 GRADE 50W	27,000 LBS. PER SQ. IN.
- AASHTO M270 GRADE 50	27,000 LBS. PER SQ. IN.
REINFORCING STEEL IN TENSION	
GRADE 60	24,000 LBS. PER SQ. IN.
CONCRETE IN COMPRESSION	1,200 LBS. PER SQ. IN.
CONCRETE IN SHEAR	SEE A.A.S.H.T.O.
STRUCTURAL TIMBER - TREATED OR	
UNTREATED - EXTREME FIBER STRESS	1,800 LBS. PER SQ. IN.
COMPRESSION PERPENDICULAR TO GRAIN OF TIMBER	375 LBS. PER SQ. IN.
EQUIVALENT FLUID PRESSURE OF EARTH	30 LBS. PER CU. FT. (MINIMUM)

MATERIAL AND WORKMANSHIP:

EXCEPT AS MAY OTHERWISE BE SPECIFIED ON PLANS OR IN THE SPECIAL PROVISIONS, ALL MATERIAL AND WORKMANSHIP SHALL BE IN ACCORDANCE WITH THE 2006 "STANDARD SPECIFICATIONS FOR ROADS AND STRUCTURES" OF THE N. C. DEPARTMENT OF TRANSPORTATION.

STEEL SHEET PILING FOR PERMANENT OR TEMPORARY APPLICATIONS SHALL BE HOT ROLLED.

CONCRETE:

UNLESS OTHERWISE REQUIRED ON PLANS, CLASS A CONCRETE SHALL BE USED FOR ALL PORTIONS OF ALL STRUCTURES WITH THE EXCEPTION THAT: CLASS AA CONCRETE SHALL BE USED IN BRIDGE SUPERSTRUCTURES, ABUTMENT BACKWALLS, AND APPROACH SLABS; AND CLASS B CONCRETE SHALL BE USED FOR SLOPE PROTECTION AND RIP RAP.

CONCRETE CHAMFERS:

UNLESS OTHERWISE NOTED ON THE PLANS, ALL EXPOSED CORNERS ON STRUCTURES SHALL BE CHAMFERED 3/4" WITH THE FOLLOWING EXCEPTIONS: TOP CORNERS OF CURBS MAY BE ROUNDED TO 1-1/2" RADIUS WHICH IS BUILT INTO CURB FORMS; CORNERS OF TRANSVERSE FLOOR EXPANSION JOINTS SHALL BE ROUNDED WITH A 1/4" FINISHING TOOL UNLESS OTHERWISE REQUIRED ON PLANS; AND CORNERS OF EXPANSION JOINTS IN THE ROADWAY FACES AND TOPS OF CURBS AND SIDEWALKS SHALL BE ROUNDED TO A 1/4" RADIUS WITH A FINISHING STONE OR TOOL UNLESS OTHERWISE REQUIRED ON PLANS.

DOWELS:

DOWELS WHEN INDICATED ON PLANS AS FOR CULVERT EXTENSIONS, SHALL BE EMBEDDED AT LEAST 12" INTO THE OLD CONCRETE AND GROUTED INTO PLACE WITH 1:2 CEMENT MORTAR.

ALLOWANCE FOR DEAD LOAD DEFLECTION, SETTLEMENT, ETC. IN CASTING SUPERSTRUCTURES:

BRIDGES SHALL BE BUILT ON THE GRADE OR VERTICAL CURVE SHOWN ON PLANS. SLABS, CURBS AND PARAPETS SHALL CONFORM TO THE GRADE OR CURVE.

ALL DIMENSIONS WHICH ARE GIVEN IN SECTION AND ARE AFFECTED BY DEAD LOAD DEFLECTIONS ARE DIMENSIONS AT CENTER LINE OF BEARING UNLESS OTHERWISE NOTED ON PLANS. IN SETTING FORMS FOR STEEL BEAM BRIDGES AND PRESTRESSED CONCRETE GIRDER BRIDGES, ADJUSTMENTS SHALL BE MADE DUE TO THE DEAD LOAD DEFLECTIONS FOR THE ELEVATIONS SHOWN. WHERE BLOCKS ARE SHOWN OVER BEAMS FOR BUILDING UP TO THE SLAB, THE VERTICAL DIMENSIONS OF THE BLOCKS SHALL BE ADJUSTED BETWEEN BEARINGS TO COMPENSATE FOR DEAD LOAD DEFLECTIONS, VERTICAL CURVE ORDINATE, AND ACTUAL BEAM CAMBER. WHERE BOTTOM OF SLAB IS IN LINE WITH BOTTOM OF TOP FLANGES, DEPTH OF SLAB BETWEEN BEARINGS SHALL BE ADJUSTED TO COMPENSATE FOR DEAD LOAD DEFLECTION, VERTICAL CURVE ORDINATE, AND ACTUAL BEAM CAMBER.

IN SETTING FALSEWORK AND FORMS FOR REINFORCED CONCRETE SPANS, AN ALLOWANCE SHALL BE MADE FOR DEAD LOAD DEFLECTIONS, SETTLEMENT OF FALSEWORK, AND PERMANENT CAMBER WHICH SHALL BE PROVIDED FOR IN ADDITION TO THE ELEVATIONS SHOWN. AFTER REMOVAL OF THE FALSEWORK, THE FINISHED STRUCTURES SHALL CONFORM TO THE PROFILE AND ELEVATIONS SHOWN ON THE PLANS AND CONSTRUCTION ELEVATIONS FURNISHED BY THE ENGINEER.

DETAILED DRAWINGS FOR FALSEWORK OR FORMS FOR BRIDGE SUPERSTRUCTURE AND ANY STRUCTURE OR PARTS OF A STRUCTURE AS NOTED ON THE PLANS SHALL BE SUBMITTED TO THE ENGINEER FOR APPROVAL BEFORE CONSTRUCTION OF THE FALSEWORK OR FORMS IS STARTED.

REINFORCING STEEL:

ALL REINFORCING STEEL SHALL BE DEFORMED. DIMENSIONS RELATIVE TO PLACEMENT OF REINFORCING ARE TO CENTERS OF BARS UNLESS OTHERWISE INDICATED IN THE PLANS. DIMENSIONS ON BAR DETAILS ARE TO CENTERS OF BARS OR ARE OUT TO OUT AS INDICATED ON PLANS.

WIRE BAR SUPPORTS SHALL BE PROVIDED FOR REINFORCING STEEL WHERE INDICATED ON THE PLANS. WHEN BAR SUPPORT PIECES ARE PLACED IN CONTINUOUS LINES, THEY SHALL BE SO PLACED THAT THE ENDS OF THE SUPPORTING WIRES SHALL BE LAPPED TO LOCK LEGS ON ADJOINING PIECES.

STRUCTURAL STEEL:

AT THE CONTRACTOR'S OPTION, HE MAY SUBSTITUTE 7/8" Ø SHEAR STUDS FOR THE 3/4" Ø STUDS SPECIFIED ON THE PLANS. THIS SUBSTITUTION SHALL BE MADE AT THE RATE OF 3 - 7/8" Ø STUDS FOR 4 - 3/4" Ø STUDS, AND STUD SPACING CHANGES SHALL BE MADE AS NECESSARY TO PROVIDE THE SAME EQUIVALENT NUMBER OF 7/8" Ø STUDS ALONG THE BEAM AS SHOWN FOR 3/4" Ø STUDS BASED ON THE RATIO OF 3 - 7/8" Ø STUDS FOR 4 - 3/4" Ø STUDS. STUDS OF THE LENGTH SPECIFIED ON THE PLANS MUST BE PROVIDED. THE MAXIMUM SPACING SHALL BE 2'-0".

EXCEPT AT THE INTERIOR SUPPORTS OF CONTINUOUS BEAMS WHERE THE COVER PLATE IS IN CONTACT WITH BEARING PLATE, THE CONTRACTOR MAY, AT HIS OPTION, SUBSTITUTE FOR THE COVER PLATES DESIGNATED ON THE PLANS COVER PLATES OF THE EQUIVALENT AREA PROVIDED THESE PLATES ARE AT LEAST 5/16" IN THICKNESS AND DO NOT EXCEED A WIDTH EQUAL TO THE FLANGE WIDTH LESS 2" OR A THICKNESS EQUAL TO 2 TIMES THE FLANGE THICKNESS. THE SIZE OF FILLET WELDS SHALL CONFORM TO THE REQUIREMENTS OF THE CURRENT ANSI/AASHTO/AWS "BRIDGE WELDING CODE". ELECTROSLAG WELDING WILL NOT BE PERMITTED.

WITH THE SOLE EXCEPTION OF EDGES AT SURFACES WHICH BEAR ON OTHER SURFACES, ALL SHARP EDGES AND ENDS OF SHAPES AND PLATES SHALL BE SLIGHTLY ROUNDED BY SUITABLE MEANS TO A RADIUS OF APPROXIMATELY 1/16 INCH OR EQUIVALENT FLAT SURFACE AT A SUITABLE ANGLE PRIOR TO PAINTING, GALVANIZING, OR METALLIZING.

HANDRAILS AND POSTS:

METAL STANDARDS AND FACES OF THE CONCRETE END POSTS FOR THE METAL RAIL SHALL BE SET NORMAL TO THE GRADE OF THE CURB, UNLESS OTHERWISE SHOWN ON PLANS. THE METAL RAIL AND TOPS OF CONCRETE POSTS USED WITH THE ALUMINUM RAIL SHALL BE BUILT PARALLEL TO THE GRADE OF THE CURB.

METAL HANDRAILS SHALL BE IN ACCORDANCE WITH THE PLANS. RAILS SHALL BE AS MANUFACTURED FOR BRIDGE RAILING. CASTINGS SHALL BE OF A UNIFORM APPEARANCE. FINS AND OTHER DEFORMATIONS RESULTING FROM CASTING OR OTHERWISE SHALL BE REMOVED IN A MANNER SO THAT A UNIFORM COLORING OF THE COMPLETED CASTING SHALL BE OBTAINED. CASTINGS WITH DISCOLORATIONS OR OF NON-UNIFORM COLORING WILL NOT BE ACCEPTED. CERTIFIED MILL REPORTS ARE REQUIRED FOR METAL RAILS AND POSTS.

SPECIAL NOTES:

GENERALLY, IN CASE OF DISCREPANCY, THIS STANDARD SHEET OF NOTES SHALL GOVERN OVER THE SPECIFICATIONS, BUT THE REMAINDER OF THE PLANS SHALL GOVERN OVER NOTES HEREON, AND SPECIAL PROVISIONS SHALL GOVERN OVER ALL. SEE SPECIFICATIONS ARTICLE 105-4.

G:\OR Projects\OR1100 - NCDOT Group W\430350\Structures\430350_SD_SN.dgn
8/4/2015 9:08:58 AM 1100_PDF_full.pltcfg 1100_str.tbl

REV. 6-16-95	EEM	(W) RGW	REV. 5-7-03	RWW	(W) JTE		
REV. 8-16-99	RWW	(W) LES	REV. 5-1-06	TLA	(W) GM		

ENGLISH

JANUARY, 1990

STD. NO. SN