STATE	STATE PROJECT REFERENCE NO.	SHEET NO.	TOTAL SHEETS
N.C.	17BP.14.R.27	1	

STATE PROJ. NO.	F.A. PROJ. NO.	DESCRIPTION
17BP.14.R.27		

STATE OF NORTH CAROLINA
DIVISION OF HIGHWAYS

HAYWOOD COUNTY

LOCATION: BRIDGE NO. 165 ON SR 1513 OVER CHAMBERS BRANCH

TYPE OF WORK: GRADING, PAVING, DRAINAGE, SIGNING, AND STRUCTURE

See Sheet 1A For Index of Sheets
See Sheet 1B For Conventional Symbols

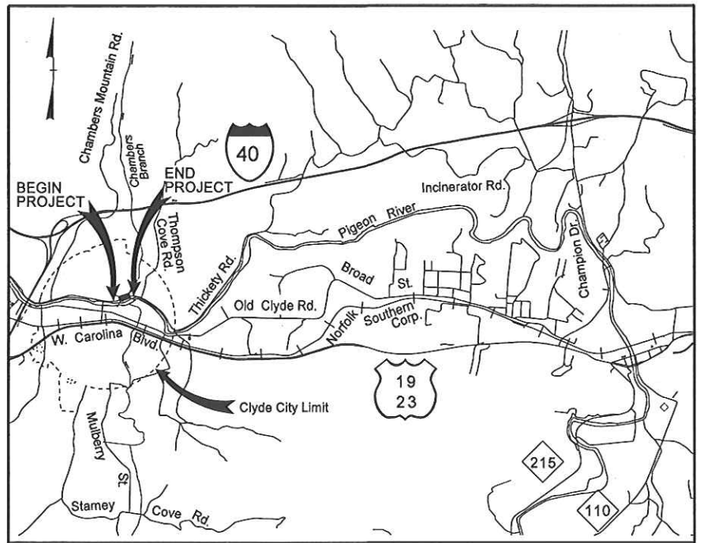

VICINITY MAP ***NTS***

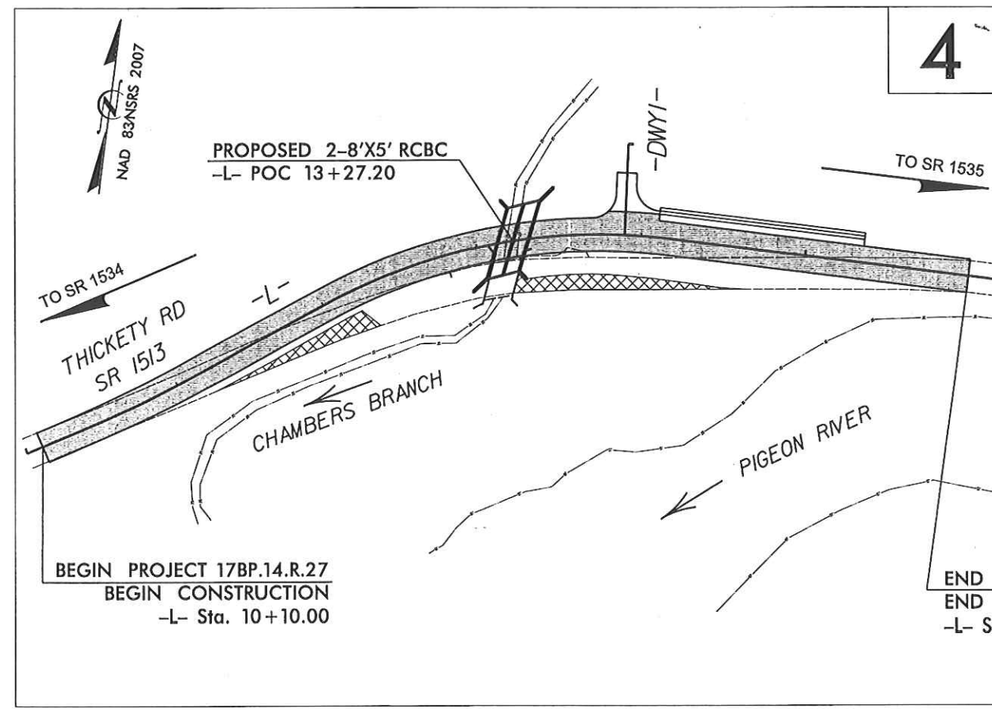

NCDOT CONTACT:
JOSH DEYTON, PE
HIGHWAY DIVISION 14
BRIDGE MANAGER
828-488-0902

PROJECT: 17BP.14.R.27

CONTRACT: DN00160

FINAL PLANS

GRAPHIC SCALES

20 10 0 20 40
PLANS

20 10 0 20 40
PROFILE (HORIZONTAL)

4 2 0 4 8
PROFILE (VERTICAL)

DESIGN DATA

ADT 2003 = 2400
ADT =
DHV = %
D = %
T = % *
V = 35 MPH
* TTST = DUAL
FUNC CLASS =
MINOR COLLECTOR
SUB-REGIONAL TIER

PROJECT LENGTH

LENGTH ROADWAY PROJECT	=	0.112 MILES
LENGTH STRUCTURES PROJECT	=	0.000 MILES
TOTAL LENGTH PROJECT	=	0.112 MILES

Prepared in the Office of:
THE LOUIS BERGER GROUP, Inc.
1001 Wade Avenue, Suite 400
Raleigh, North Carolina 27605
License No.: F-0840

2012 STANDARD SPECIFICATIONS

RIGHT OF WAY DATE:
MARCH 13, 2013

LETTING DATE:
SEPTEMBER 24, 2013

DEAN HATFIELD, PE
PROJECT ENGINEER

WILLIAM TILLITT, PE
PROJECT DESIGN ENGINEER

HYDRAULICS ENGINEER
NORTH CAROLINA PROFESSIONAL SEAL 20744 ENGINEER DAVID L. SMITH
SIGNATURE: P.E. 8/20/13

ROADWAY DESIGN ENGINEER
NORTH CAROLINA PROFESSIONAL SEAL 16003 ENGINEER DEAN D. HATFIELD
SIGNATURE: P.E. 8/23/13

DIVISION OF HIGHWAYS
STATE OF NORTH CAROLINA

STATE OF NORTH CAROLINA DEPARTMENT OF TRANSPORTATION

P.E.
STATE HIGHWAY DESIGN ENGINEER

8/23/2013 10:58:28 AM
G:\DR Projects\DR1100 - NCDOT Group W\430165\Roadway\Proj\430165_RDY_00_TSH.dgn
G:\CADD\Plot\DR1100\1100_rdy.tbl

PROJECT REFERENCE NO.	SHEET NO.
17BP.14.R.27	1A

ROADWAY DESIGN ENGINEER

NORTH CAROLINA PROFESSIONAL SEAL 19004 ENGINEER DUANE D. HATFIELD

REGISTERED ENGINEER
8/2/2013

STATE OF NORTH CAROLINA
DIVISION OF HIGHWAYS

INDEX OF SHEETS

INDEX OF SHEETS

SHEET NUMBER	SHEET
1	TITLE SHEET
1-A	INDEX OF SHEETS, GENERAL NOTES, AND LIST OF STANDARD DRAWINGS
1-B	CONVENTIONAL SYMBOLS
1-C	SURVEY CONTROL
2	PAVEMENT SCHEDULE, TYPICAL SECTIONS, AND WEDGING DETAILS
3	SUMMARY OF QUANTITIES
3A	SUMMARIES OF EARTHWORK, GUARDRAIL & SHOULDER BERM GUTTER & SUMMARY OF DRAINAGE QUANTITIES
4	PLAN SHEET
5	PROFILE SHEET
TMP-1 THRU TMP-4	TRAFFIC MANAGEMENT PLANS
PMP-1 THRU PMP-2	PAVEMENT MARKING PLANS
EC-1 THRU EC-4	EROSION CONTROL PLANS
UO-1 THRU UO-7	UTLITIES BY OTHERS PLANS
X-1 THRU X-12	CROSS-SECTIONS
C-1 THRU C-8	CULVERT PLANS

GENERAL NOTES

GENERAL NOTES: 2012 SPECIFICATIONS
EFFECTIVE: 01-17-12
REVISED: 11/01/11

GRADING AND SURFACING OR RESURFACING AND WIDENING:

THE GRADE LINES SHOWN DENOTE THE FINISHED ELEVATION OF THE PROPOSED SURFACING AT GRADE POINTS SHOWN ON THE TYPICAL SECTIONS. WHERE NO GRADE LINES ARE SHOWN, THE PROFILES SHOWN DENOTE THE TOP ELEVATION OF THE EXISTING PAVEMENT ALONG THE CENTER LINE OF SURVEY ON WHICH THE PROPOSED RESURFACING WILL BE PLACED. GRADE LINES MAY BE ADJUSTED BY THE ENGINEER IN ORDER TO SECURE A PROPER TIE-IN.

CLEARING:

CLEARING ON THIS PROJECT SHALL BE PERFORMED TO THE LIMITS ESTABLISHED BY METHOD II.

SUPERELEVATION:

ALL CURVES ON THIS PROJECT SHALL BE SUPERELEVATED IN ACCORDANCE WITH STD. NO. 225.04 USING THE RATE OF SUPERELEVATION AND RUNOFF SHOWN ON THE PLANS. SUPERELEVATION IS TO BE REVOLVED ABOUT THE GRADE POINTS SHOWN ON THE TYPICAL SECTIONS.

SHOULDER CONSTRUCTION:

ASPHALT, EARTH, AND CONCRETE SHOULDER CONSTRUCTION ON THE HIGH SIDE OF SUPERELEVATED CURVES SHALL BE IN ACCORDANCE WITH STD. NO. 560.01.

SIDE ROADS:

THE CONTRACTOR WILL BE REQUIRED TO DO ALL NECESSARY WORK TO PROVIDE SUITABLE CONNECTIONS WITH ALL ROADS, STREETS, AND DRIVES ENTERING THIS PROJECT. THIS WORK WILL BE PAID FOR AT THE CONTRACT UNIT PRICE FOR THE PARTICULAR ITEMS INVOLVED.

GUARDRAIL:

THE GUARDRAIL LOCATIONS SHOWN ON THE PLANS MAY BE ADJUSTED DURING CONSTRUCTION AS DIRECTED BY THE ENGINEER. THE CONTRACTOR SHOULD CONSULT WITH THE ENGINEER PRIOR TO ORDERING GUARDRAIL MATERIAL.

UTILITIES:

UTILITY OWNERS ON THIS PROJECT ARE

AT&T, PROGRESS ENERGY & TOWN OF WAYNESVILLE

ANY RELOCATION OF EXISTING UTILITIES WILL BE ACCOMPLISHED BY OTHERS.

ROADWAY ENGLISH STANDARD DRAWINGS

2012 ROADWAY ENGLISH STANDARD DRAWINGS

The following Roadway Standards as appear in "Roadway Standard Drawings" Highway Design Branch - N. C. Department of Transportation - Raleigh, N. C., Dated January, 2012 are applicable to this project and by reference hereby are considered a part of these plans:

STD.NO.	TITLE
DIVISION 2 - EARTHWORK	
200.02	Method of Clearing - Method II
225.02	Guide for Grading Subgrade - Secondary and Local
225.04	Method of Obtaining Superelevation - Two Lane Pavement
225.06	Method of Grading Sight Distance at Intersections
DIVISION 3 - PIPE CULVERTS	
300.01	Method of Pipe Installation
310.10	Driveway Pipe Construction
DIVISION 5 - SUBGRADE, BASES AND SHOULDERS	
560.01	Method of Shoulder Construction - High Side of Superelevated Curve - Method I
DIVISION 8 - INCIDENTALS	
840.16	Drop Inlet Frame and Grates - for use with Std. Dwg 840.14 and 840.15
840.25	Anchorage for Frames - Brick or Concrete or Precast
840.29	Frames and Narrow Slot Flat Grates
840.35	Traffic Bearing Grated Drop Inlet - for Cast Iron Double Frame and Grates
846.02	Drop Inlet Installation in Expressway Gutter
846.04	Drop Inlet Installation in Shoulder Berm Gutter
862.01	Guardrail Placement
862.02	Guardrail Installation
876.01	Rip Rap in Channels
876.02	Guide for Rip Rap at Pipe Outlets

8/2/2013 3:11:26 PM
G:\OR Projects\OR1100 - NCDOT Group W\430165\Roadway\Proj\430165_RDY_01_1A.dgn
G:\CADD\Plot\OR1100\1100_rdy.tbl

PROJECT REFERENCE NO.	SHEET NO.
17BP.14.R.27	1B

Note: Not to Scale

**S.U.E. = Subsurface Utility Engineering*

STATE OF NORTH CAROLINA
DIVISION OF HIGHWAYS

CONVENTIONAL PLAN SHEET SYMBOLS

BOUNDARIES AND PROPERTY:

- State Line
- County Line
- Township Line
- City Line
- Reservation Line
- Property Line
- Existing Iron Pin — IP
- Property Corner
- Property Monument — PM
- Parcel/Sequence Number — 123
- Existing Fence Line
- Proposed Woven Wire Fence
- Proposed Chain Link Fence
- Proposed Barbed Wire Fence
- Existing Wetland Boundary — WLB
- Proposed Wetland Boundary — WLB
- Existing Endangered Animal Boundary — EAB
- Existing Endangered Plant Boundary — EPB
- Known Soil Contamination: Area or Site
- Potential Soil Contamination: Area or Site

BUILDINGS AND OTHER CULTURE:

- Gas Pump Vent or U/G Tank Cap
- Sign
- Well
- Small Mine
- Foundation
- Area Outline
- Cemetery
- Building
- School
- Church
- Dam

HYDROLOGY:

- Stream or Body of Water
- Hydro, Pool or Reservoir
- Jurisdictional Stream — JS
- Buffer Zone 1 — BZ 1
- Buffer Zone 2 — BZ 2
- Flow Arrow
- Disappearing Stream
- Spring
- Wetland
- Proposed Lateral, Tail, Head Ditch — FLOW
- False Sump

RAILROADS:

- Standard Gauge — CSX TRANSPORTATION
- RR Signal Milepost — MILEPOST 35
- Switch — SWITCH
- RR Abandoned
- RR Dismantled

RIGHT OF WAY:

- Baseline Control Point
- Existing Right of Way Marker
- Existing Right of Way Line
- Proposed Right of Way Line — RW
- Proposed Right of Way Line with Iron Pin and Cap Marker — RW
- Proposed Right of Way Line with Concrete or Granite Marker — RW
- Existing Control of Access — CA
- Proposed Control of Access — CA
- Existing Easement Line — E
- Proposed Temporary Construction Easement — E
- Proposed Temporary Drainage Easement — TDE
- Proposed Permanent Drainage Easement — PDE
- Proposed Permanent Drainage / Utility Easement — DUE
- Proposed Permanent Utility Easement — PUE
- Proposed Temporary Utility Easement — TUE
- Proposed Aerial Utility Easement — AUE
- Proposed Permanent Easement with Iron Pin and Cap Marker

ROADS AND RELATED FEATURES:

- Existing Edge of Pavement
- Existing Curb
- Proposed Slope Stakes Cut — C
- Proposed Slope Stakes Fill — F
- Proposed Curb Ramp — CR
- Existing Metal Guardrail
- Proposed Guardrail
- Existing Cable Guiderail
- Proposed Cable Guiderail
- Equality Symbol
- Pavement Removal

VEGETATION:

- Single Tree
- Single Shrub
- Hedge
- Woods Line
- Orchard
- Vineyard — Vineyard

EXISTING STRUCTURES:

MAJOR:

- Bridge, Tunnel or Box Culvert — CONC
- Bridge Wing Wall, Head Wall and End Wall — CONC WW

MINOR:

- Head and End Wall — CONC HW
- Pipe Culvert
- Footbridge
- Drainage Box: Catch Basin, DI or JB — CB
- Paved Ditch Gutter
- Storm Sewer Manhole — S
- Storm Sewer — S

UTILITIES:

POWER:

- Existing Power Pole
- Proposed Power Pole
- Existing Joint Use Pole
- Proposed Joint Use Pole
- Power Manhole — P
- Power Line Tower
- Power Transformer
- U/G Power Cable Hand Hole
- H-Frame Pole
- Recorded U/G Power Line — P
- Designated U/G Power Line (S.U.E.*) — P

TELEPHONE:

- Existing Telephone Pole
- Proposed Telephone Pole
- Telephone Manhole — T
- Telephone Booth
- Telephone Pedestal — T
- Telephone Cell Tower
- U/G Telephone Cable Hand Hole — HH
- Recorded U/G Telephone Cable — T
- Designated U/G Telephone Cable (S.U.E.*) — T
- Recorded U/G Telephone Conduit — TC
- Designated U/G Telephone Conduit (S.U.E.*) — TC
- Recorded U/G Fiber Optics Cable — T FO
- Designated U/G Fiber Optics Cable (S.U.E.*) — T FO

WATER:

- Water Manhole — W
- Water Meter
- Water Valve
- Water Hydrant
- Recorded U/G Water Line — W
- Designated U/G Water Line (S.U.E.*) — W
- Above Ground Water Line — A/G Water

TV:

- TV Satellite Dish
- TV Pedestal — C
- TV Tower
- U/G TV Cable Hand Hole — HH
- Recorded U/G TV Cable — TV
- Designated U/G TV Cable (S.U.E.*) — TV
- Recorded U/G Fiber Optic Cable — TV FO
- Designated U/G Fiber Optic Cable (S.U.E.*) — TV FO

GAS:

- Gas Valve
- Gas Meter
- Recorded U/G Gas Line — G
- Designated U/G Gas Line (S.U.E.*) — G
- Above Ground Gas Line — A/G Gas

SANITARY SEWER:

- Sanitary Sewer Manhole
- Sanitary Sewer Cleanout
- U/G Sanitary Sewer Line — SS
- Above Ground Sanitary Sewer — A/G Sanitary Sewer
- Recorded SS Forced Main Line — FSS
- Designated SS Forced Main Line (S.U.E.*) — FSS

MISCELLANEOUS:

- Utility Pole
- Utility Pole with Base
- Utility Located Object
- Utility Traffic Signal Box — S
- Utility Unknown U/G Line — ?UTL
- U/G Tank; Water, Gas, Oil
- Underground Storage Tank, Approx. Loc. — UST
- A/G Tank; Water, Gas, Oil
- Geoenvironmental Boring
- U/G Test Hole (S.U.E.*)
- Abandoned According to Utility Records — AATUR
- End of Information — E.O.I.

04/16/11
8/2/2013 3:11:27 PM
G:\DR Projects\DR1100 - NCDOT Group W\430165\Roadway\Proj\430165_RDY_01_1B.dgn
G:\CADD\Plot\DR1100\1100_rdy.tbl

PROJECT REFERENCE NO.	SHEET NO.
17BP.14.R.27	1C
Location and Surveys	

SURVEY CONTROL SHEET 43-0165
-FINAL-

BL

POINT	DESC.	NORTH	EAST	ELEVATION	L STATION	OFFSET
1	BL-1	672734.6745	837504.1202	2525.66	10+34.71	15.91 LT
2	BL-2	672799.6410	837787.7870	2525.94	13+32.96	35.74 RT
3	BL-3	672823.3486	838061.4751	2524.79	16+10.99	12.56 LT

BM1 ELEVATION = 2527.93
N 672856 E 838018
L STATION 15+63.20 40 LEFT
RR SPIKE SET IN BASE 36" SYCAMORE

FINAL -L-

TYPE	STATION	NORTH	EAST
POT	10+00.00	672706.5507	837478.4478
PC	10+28.70	672717.7092	837504.8852
PT	10+98.93	672747.8221	837568.3077
PC	12+03.63	672796.8378	837660.8305
PT	14+17.66	672834.8561	837868.0807
POT	16+18.60	672809.9370	838067.4745

-FINAL- PUE MARKER IRON PIN AND CAP-E

ALIGN	STATION	OFFSET	NORTH	EAST
L	10+46.24	-30.00	672752.0827	837508.6993
L	10+46.35	-35.01	672756.6969	837506.7518
L	10+56.81	-34.94	672760.7841	837515.8809
L	10+56.63	-30.00	672756.2331	837517.8018
L	12+30.00	-40.00	672844.9485	837668.5627
L	13+16.60	-40.00	672872.2979	837760.8416
L	14+30.54	30.00	672803.4902	837877.1424
L	12+61.90	38.29	672783.3732	837726.4190
L	12+60.18	55.01	672767.0493	837730.3151
L	12+48.28	54.77	672763.9248	837720.7847
L	12+50.88	36.26	672782.0433	837716.4555
L	12+24.60	30.00	672778.7886	837692.0705

-FINAL- ROW MARKER IRON PIN AND CAP-E

ALIGN	STATION	OFFSET	NORTH	EAST
L	10+00.00	-12.00	672717.6063	837473.7815
L	10+00.00	-30.00	672734.1897	837466.7821
L	10+28.70	-30.00	672745.3482	837493.2195
L	10+98.93	-30.00	672774.3318	837554.2636
L	12+03.63	-30.00	672823.3475	837646.7865
L	13+70.00	-30.00	672867.5311	837820.1791
L	14+17.66	-20.00	672854.7017	837870.5609
L	16+00.00	-20.00	672832.0897	838051.4948
L	16+00.00	-11.67	672823.8240	838050.4618
L	16+00.00	12.34	672799.9993	838047.4844
L	16+00.00	30.00	672782.4756	838045.2943
L	14+17.66	30.00	672805.0876	837864.3604
L	12+03.63	30.00	672770.3281	837674.8745
L	10+98.93	30.00	672721.3124	837582.3517
L	10+28.70	30.00	672690.0703	837516.5508
L	10+00.00	30.00	672678.9117	837490.1135
L	10+00.00	12.00	672695.4951	837483.1141

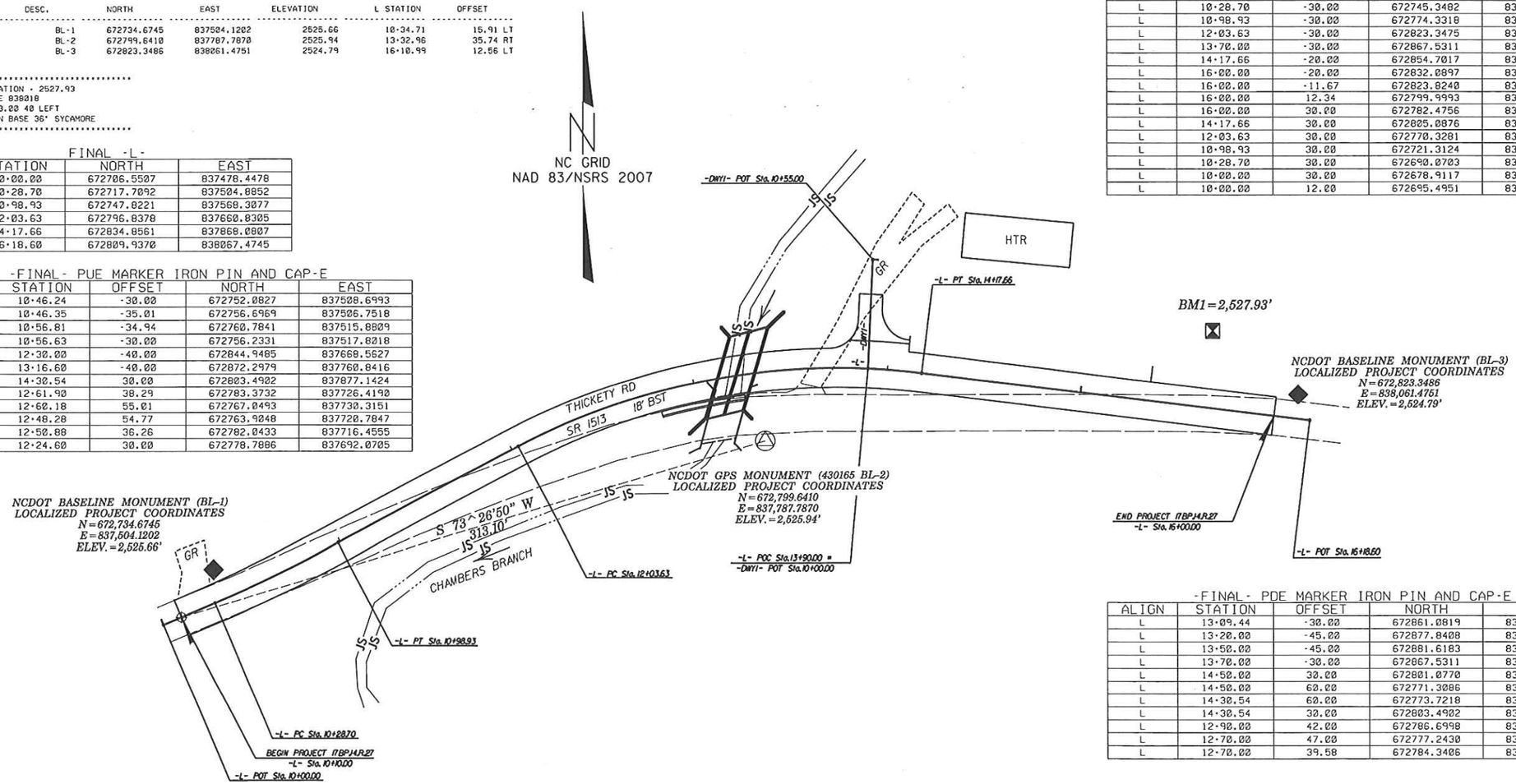

-FINAL- PDE MARKER IRON PIN AND CAP-E

ALIGN	STATION	OFFSET	NORTH	EAST
L	13+09.44	-30.00	672861.0819	837754.8225
L	13+20.00	-45.00	672877.8408	837763.8163
L	13+50.00	-45.00	672881.6183	837797.4516
L	13+70.00	-30.00	672867.5311	837820.1791
L	14+50.00	30.00	672801.0770	837896.4522
L	14+50.00	60.00	672771.3086	837892.7319
L	14+30.54	60.00	672773.7218	837873.4221
L	14+30.54	30.00	672803.4902	837877.1424
L	12+90.00	42.00	672786.6998	837751.3425
L	12+70.00	47.00	672777.2430	837735.8436
L	12+70.00	39.58	672784.3406	837733.6671

DATUM DESCRIPTION

THE LOCALIZED COORDINATE SYSTEM DEVELOPED FOR THIS PROJECT IS BASED ON THE STATE PLANE COORDINATES ESTABLISHED BY NCDOT FOR MONUMENT "430165 (BL-2)"
WITH NAD 83/NSRS 2007 STATE PLANE GRID COORDINATES OF
NORTHING: 672,799.6410(ft) EASTING: 837,787.7870(ft)
ELEVATION: 2,525.94(ft)
THE AVERAGE COMBINED GRID FACTOR USED ON THIS PROJECT (GROUND TO GRID) IS: 0.999768583
THE N.C. LAMBERT GRID BEARING AND LOCALIZED HORIZONTAL GROUND DISTANCE FROM "430165 (BL-2)" TO -L- STATION 10+10.00 IS
S 73° 26'50" W 313.10'
ALL LINEAR DIMENSIONS ARE LOCALIZED HORIZONTAL DISTANCES
VERTICAL DATUM USED IS NAVD 88

GEOID MODEL - G09NC
NOTE: DRAWING NOT TO SCALE

NOTES:

1. THE CONTROL DATA FOR THIS PROJECT CAN BE FOUND ELECTRONICALLY BY SELECTING PROJECT CONTROL DATA AT:
HTTPS://CONNECT.NCDOT.GOV/RESOURCES/LOCATION/

THE FILES TO BE FOUND ARE AS FOLLOWS:
430165_LS_CONTROL.TXT

SITE CALIBRATION INFORMATION HAS NOT BEEN PROVIDED FOR THIS PROJECT. IF FURTHER INFORMATION IS NEEDED, PLEASE CONTACT THE LOCATION AND SURVEYS UNIT.

△ INDICATES GEODETIC CONTROL MONUMENTS USED OR SET FOR HORIZONTAL PROJECT CONTROL BY THE NCDOT LOCATION AND SURVEYS UNIT.
PROJECT CONTROL ESTABLISHED USING GLOBAL POSITIONING SYSTEM.

6/2/99

SYSTIME$$$$
SYSDATE$$$$
USERNAME$$$$

PROJECT REFERENCE NO.	SHEET NO.
17BP.14.R.27	2
R/W SHEET NO.	
ROADWAY DESIGN ENGINEER	PAVEMENT DESIGN ENGINEER

NORTH CAROLINA PROFESSIONAL SEAL 19002 ENGINEER DAVID D. HAYFIELD
REGISTERED ENGINEER 8/2/2013

N.T.S

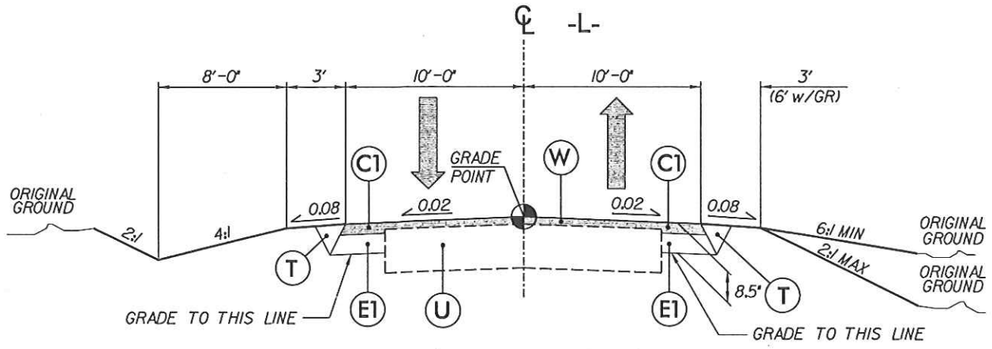

TYPICAL SECTION No. 1

-L- STA 10+10.00 TO -L- STA 11+30.00
-L- STA 15+50.00 TO -L- STA 16+00.00

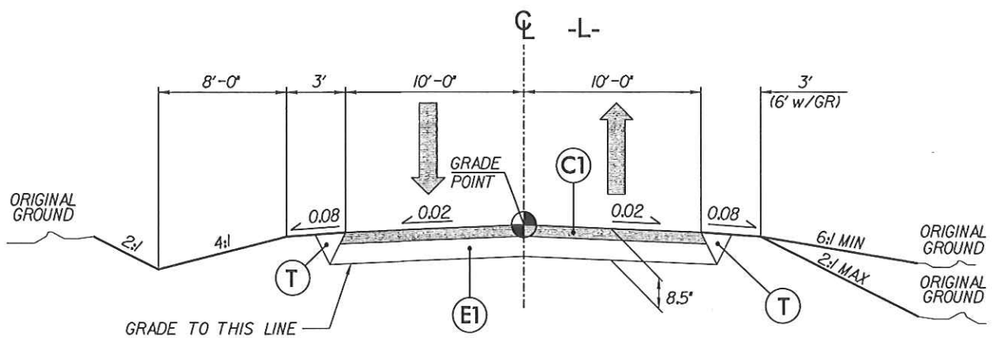

TYPICAL SECTION No. 2

-L- STA 11+30.00 TO -L- STA 15+50.00

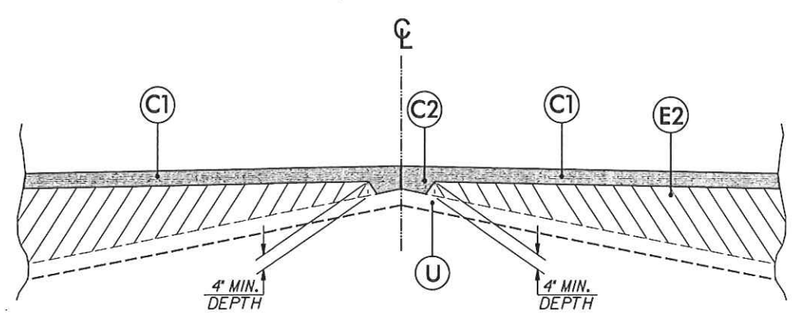

DETAIL SHOWING METHOD OF WEDGING

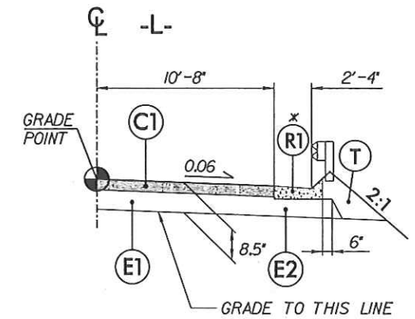

SHOULDER BERM GUTTER DETAIL

-L- 12+80.00 TO -L- 13+25.00 RT

* SEE PROFILE FOR SPECIAL SBG GRADE

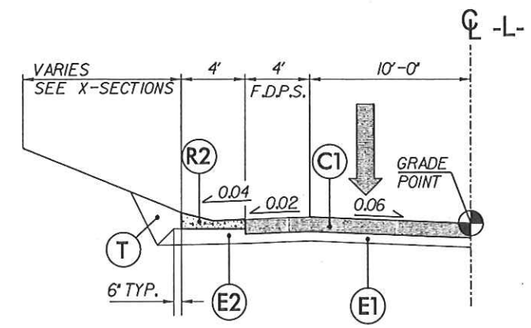

TYPICAL SECTION EXPRESSWAY GUTTER

-L- STA 14+10.00 TO -L- STA 15+35.00 LT

Note: Pavement edge slopes are 1:1 unless shown otherwise.

PAVEMENT SCHEDULE	
ITEM	DESCRIPTION
C1	Prop. Approx 3.0" Asphalt Concrete Surface Course, Type S9.5B, at an Average Rate of 168 lbs. Per sq. yard in each of two layers.
C2	Prop. Var. Depth Asphalt Concrete Surface Course, Type S9.5B, at an Average Rate of 112 lbs. Per sq. yard Per 1" Depth, to be placed in layers not less than 1.5" or greater than 2" in depth.
E1	Prop. Approx 5.5" Asphalt Concrete Base Course, Type B25.0B, at an Average Rate of 627 lbs. Per sq. yard.
E2	Prop. Var. Depth Asphalt Concrete Base Course, Type B25.0B, at an Average Rate of 114 lbs. Per sq. yard Per 1" Depth, to be placed in layers not less than 3" or greater than 5.5" in depth. For B25.0B placed on unstabilized subgrade, minimum lift thickness is 4.0"
R1	Shoulder Berm Gutter
R2	Expressway Gutter
T	Earth Material
U	Existing Pavement
W	Var. Depth Asphalt Pavement (See Wedging Detail)

REVISIONS

8/2/2013 3:41:31 PM
G:\DR Projects\DR1100 - NCDOT Group W\430165\Roadway\Proj\430165_RDY_02_TYP.dgn
G:\CADD\Plot\DR1100\1100_rdy.tbl

STATE OF NORTH CAROLINA
DIVISION OF HIGHWAYS

SUMMARY OF QUANTITIES

Line Item	Des	Sec No.	Description	Quantity	Unit
1	0000100000-N	800	MOBILIZATION	1	LS
2	0000400000-N	801	CONSTRUCTION SURVEYING	1	LS
3	0008000000-E	200	SUPPLEMENTARY CLEARING & GRUB-BING	1	ACR
4	0036000000-E	225	UNDERCUT EXCAVATION	50	CY
5	0043000000-N	226	GRADING	1	LS
-	-	200	CLEARING & GRUBBING (1 Acres)	1	LS
-	-	225	UNCLASSIFIED EXCAVATION	670	CY
-	-	250	REMOVAL OF EXISTING ASPHALT PAVEMENT	210	SY
-	-	500	FINE GRADING (1,100 SY)	1	LS
6	0134000000-E	240	DRAINAGE DITCH EXCAVATION	15	CY
7	0195000000-E	265	SELECT GRANULAR MATERIAL	50	CY
8	0196000000-E	270	GEOTEXTILE FOR SOIL STABILIZATION	50	SY
9	0318000000-E	300	FOUNDATION CONDITIONING MATERIAL MINOR STRUCTURES	10	TON
10	0320000000-E	300	FOUNDATION CONDITIONING FABRIC	30	SY
11	0445200000-E	310	15" RC PIPE CULVERTS, CLASS IV	32	LF
12	0582000000-E	310	15" CS PIPE CULVERTS, 0.064" THICK	32	LF
13	0995000000-E	340	PIPE REMOVAL	37	LF
14	1099700000-E	505	CLASS IV SUBGRADE STABILIZA- TION	50	TON
15	1220000000-E	545	INCIDENTAL STONE BASE	50	TON
16	1489000000-E	610	ASPHALT CONC BASE COURSE, TYPE B25.0B	400	TON
17	1519000000-E	610	ASPHALT CONC SURFACE COURSE, TYPE S9.5B	230	TON
18	1575000000-E	620	ASPHALT BINDER FOR PLANT MIX	35	TON
19	2286000000-N	840	MASONRY DRAINAGE STRUCTURES	2	EA
20	2367000000-N	840	FRAME WITH TWO GRATES, STD 840.29	2	EA
21	2556000000-E	846	SHOULDER BERM GUTTER	45	LF
22	2577000000-E	846	CONCRETE EXPRESSWAY GUTTER	125	LF
23	3030000000-E	862	STEEL BM GUARDRAIL	187.5	LF
24	3045000000-E	862	STEEL BM GUARDRAIL, SHOP CURVED	12.5	LF
25	3165000000-N	SP	GUARDRAIL ANCHOR UNITS, TYPE 350 TL-2	3	EA
26	3195000000-N	862	GUARDRAIL ANCHOR UNITS, TYPE AT-1	1	EA
27	3569000000-E	867	BARBED WIRE FENCE RESET	275	LF
28	3628000000-E	876	RIP RAP, CLASS I	60	TON
29	3649000000-E	876	RIP RAP, CLASS B	15	TON
30	3656000000-E	876	GEOTEXTILE FOR DRAINAGE	80	SY
31	4400000000-E	1110	WORK ZONE SIGNS (STATIONARY)	176	SF
32	4410000000-E	1110	WORK ZONE SIGNS (BARRICADE MOUNTED)	28	SF
33	4430000000-N	1130	DRUMS	45	EA
34	4445000000-E	1145	BARRICADES (TYPE III)	16	LF
35	4450000000-E	1150	FLAGGER	64	HR
36	4465000000-N	1160	TEMPORARY CRASH CUSHIONS	2	EA
37	4485000000-E	1170	PORTABLE CONCRETE BARRIER	335	LF
38	4490000000-E	1170	PORTABLE CONCRETE BARRIER (ANCHORED)	20	LF
39	4810000000-E	1205	PAINT PAVEMENT MARKING LINES (4")	6,320	LF
40	4835000000-E	1205	PAINT PAVEMENT MARKING LINES (24")	24	LF
41	4850000000-E	1205	REMOVAL OF PAVEMENT MARKING LINES (4")	1,100	LF
42	4870000000-E	1205	REMOVAL OF PAVEMENT MARKING LINES (24")	24	LF
43	6000000000-E	1605	TEMPORARY SILT FENCE	430	LF
44	6009000000-E	1610	EROSION CONTROL STONE, CLASS B	30	TON
45	6012000000-E	1610	SEDIMENT CONTROL STONE	40	TON
46	6015000000-E	1615	TEMPORARY MULCHING	1	ACR
47	6018000000-E	1620	SEED FOR TEMPORARY SEEDING	50	LB
48	6021000000-E	1620	FERTILIZER FOR TEMPORARY SEEDING	0.25	TN
49	6024000000-E	1622	TEMPORARY SLOPE DRAINS	200	LF
50	6029000000-E	SP	SAFEFY FENCE	100	LF
51	6036000000-E	1631	MATTING FOR EROSION CONTROL	5,000	SY
52	6042000000-E	1632	1/4" HARDWARE CLOTH	115	LF
53	6070000000-N	1639	SPECIAL STILLING BASIN (10 X 15)	1	EA
54	6071010000-E	SP	WATTLE	105	LF
55	6071020000-E	SP	POLYACRYLAMIDE (PAM)	15	LB
56	6084000000-E	1660	SEEDING & MULCHING	2.1	ACR
57	6090000000-E	1661	SEED FOR REPAIR SEEDING	50	LB
58	6093000000-E	1661	FERTILIZER FOR REPAIR SEEDING	0.25	TON
59	6096000000-E	1662	SEED FOR SUPPLEMENTAL SEEDING	50	LB
60	6108000000-E	1665	FERTILIZER TOPDRESSING	1	TN
61	6111000000-E	SP	IMPERVIOUS DIKE	260	LF
62	6117000000-N	SP	RESPONSE FOR EROSION CONTROL	9	EA
63	7980000000-N	SP	GENERIC SIGNAL ITEM - TEMP. TRAFFIC SIGNAL SYSTEM	1	EA
			STRUCTURES		
64	8035000000-N	402	REMOVAL OF EXISTING STRUCTURE AT STATION -L- 13+22.20	1	LS
65	8126000000-N	414	CULVERT EXCAVATION, STATION -L- 13+22.20	1	LS
66	8133000000-E	414	FOUNDATION CONDITIONING MATER-IAL, BOX CULVERT	69	TON
67	8196000000-E	420	CLASS A CONCRETE (CULVERT)	93.8	CY
68	8245000000-E	425	REINFORCING STEEL (CULVERT)	25,590	LB
69	8594000000-E	876	RIP RAP, CLASS B	40.3	TON

THE LOUIS BERGER GROUP, Inc.
1001 Wade Avenue, Suite 400
Raleigh, NC 27605-3322

ROADWAY PLANS

REVISIONS

8/28/2013 11:33:52 AM
G:\06 Projects\0R1100 - NCDOT Group VI\430165\Roadway\Proj\430165_RDY_03_S00.dgn
G:\CADD\Plots\0R1100\100_rdy.tbl

PROJECT REFERENCE NO.	SHEET NO.
I7BPJ4.R.27	3A

STATE OF NORTH CAROLINA
DIVISION OF HIGHWAYS

"N" = DISTANCE FROM EDGE OF LANE TO FACE OF GUARDRAIL.
TOTAL SHOULDER WIDTH = DISTANCE FROM EDGE OF TRAVEL LANE TO SHOULDER BREAK POINT.
FLARE LENGTH = DISTANCE FROM LAST SECTION OF PARALLEL GUARDRAIL TO END OF GUARDRAIL.
W = TOTAL WIDTH OF FLARE FROM BEGINNING OF TAPER TO END OF GUARDRAIL.
G = GATING IMPACT ATTENUATOR TYPE 350
NG = NON-GATING IMPACT ATTENUATOR TYPE 350

GUARDRAIL SUMMARY

SURVEY LINE	BEG. STA.	END STA.	LOCATION	LENGTH			WARRANT POINT		"N" DIST. FROM E.O.L.	TOTAL SHOUL. WIDTH	FLARE LENGTH		W		ANCHORS									IMPACT ATTENUATOR TYPE 350			SINGLE FACED GUARDRAIL	REMOVE EXISTING GUARDRAIL	REMOVE AND STOCKPILE EXISTING GUARDRAIL	REMARKS
				STRAIGHT	SHOP CURVED	DOUBLE FACED	APPROACH END	TRAILING END			APPROACH END	TRAILING END	APPROACH END	TRAILING END	XI MOD	XI	GRAU 350 TL-2	M-350	TYPE-III	CAT-1	VI MOD	B-77	AT-1	EA	G	NG				
L	12+50.00	13+68.75	LT	118.75	12.5	-	-	-	3'	6'	-	-	-	-	-	-	1	-	-	-	-	-	1	-	-	-	-	-	-	USE STD 862.03 TO ANCHOR GR POST TO CULVERT
L	12+50.00	14+00.00	RT	150	-	-	-	-	3'	6'	-	-	-	-	-	-	2	-	-	-	-	-	-	-	-	-	-	-	-	USE STD 862.03 TO ANCHOR GR POST TO CULVERT
-	-	-	-	-	-	-	-	-	-	-	-	-	-	-	-	-	-	-	-	-	-	-	-	-	-	-	-	-	-	-
-	-	-	-	-	-	-	-	-	-	-	-	-	-	-	-	-	-	-	-	-	-	-	-	-	-	-	-	-	-	-
-	-	-	-	-	-	-	-	-	-	-	-	-	-	-	-	-	-	-	-	-	-	-	-	-	-	-	-			-
-	-	-	-	-	-	-	-	-	-	-	-	-	-	-	-	-	-	-	-	-	-	-	-	-	-	-	-	-	-	-
			SUB-TOTAL	268.75	12.5										DEDUCTIONS FOR GUARDRAIL ANCHOR UNITS															
	DEDUCTIONS FOR GUARDRAIL ANCHOR UNITS			81.25											TYPE TL-2			3@ 25.00' =		75'										
			TOTAL	187.5	12.5										TYPE AT-1			1@ 6.25' =		6.25'										
			SAY	187.5	12.5													TOTAL =		81.25'										

SUMMARY OF EARTHWORK (IN CUBIC YARDS)

STATION	STATION	UNCL. EXCAV.	EMBANK. +%	BORROW	WASTE
-L- 10+10.00	16+00.00	707	134	0	533
-	-	-	-	-	-
-	-	-	-	-	-
-	-	-	-	-	-
-	-	-	-	-	-
-	-	-	-	-	-
PROJECT TOTALS:		707	134	0	533
		-	-	-	-
-		-	-	-	-
-		-	-	-	-
WASTE IN LIEU OF BORROW		-	-	-40	-40
LOSS DUE TO CLEARING & GRUBBING		-40	-	40	-
EST. 5% TO REPLACE TOP SOIL ON BORROW PIT		-	-	-	-
-		-	-	-	-
GRAND TOTALS:		667	134	0	513
-		-	-	-	-
SAY:		670	-	-	-

CONTINGENCY ITEMS
UNDERCUT EXCAVATION 50 CY
SELECT GRANULAR MATERIAL 50 CY
GEOTEXTILE FOR SOIL STABILIZATION 50 SY
CLASS IV SUBGRADE STABILIZATION 50 TON
INCIDENTAL STONE BASE 50 TON

PAVEMENT REMOVAL SUMMARY

SURVEY LINE	STATION	STATION	LOCATION LT/RT/CL	YD²
L	11+20	12+27	RT	65
L	13+15	15+22	RT	136
-	-	-	-	-
-	-	-	-	-
			TOTAL:	201
				-
			SAY:	210

SHOULDER BERM GUTTER SUMMARY

SURVEY LINE	STATION	STATION	LOCATION	LENGTH
-L-	12+80	13+25	RT	45
-	-	-	-	-
-	-	-	-	-
-	-	-	-	-
			TOTAL:	45
			SAY:	45

NOTE: INVERT ELEVATIONS INDICATED ARE FOR BID PURPOSES ONLY AND SHALL NOT BE USED FOR PROJECT CONSTRUCTION STAKEOUT. SEE "STANDARDS SPECIFICATIONS FOR ROADS AND STRUCTURES, SECTION 300-5".

LIST OF PIPES, ENDWALLS, ETC. (FOR PIPES 48" & UNDER)

STATION / SIZE / THICKNESS OR GAUGE	LOCATION (LT, RT, OR CL)	STRUCTURE NO. FROM	STRUCTURE NO. TO	TOP ELEVATION	INVERT ELEVATION	INVERT ELEVATION	SLOPE CRITICAL
-L- 12+85	RT	0401		2525.83			
		0401	0402		2521.53	2520.90	
-L- 15+30	LT	0403		2526.11			
		0403	0404		2522.94	2522.76	
SHEET TOTALS							

STATION	DRAINAGE PIPE (RCP, CSP, CAAP, HDPE, or PVC) 12"	15"	18"	24"	30"	36"	42"	48"	DO NOT USE RCP	DO NOT USE CSP	DO NOT USE CAAP	DO NOT USE HDPE	C.S. PIPE 12" (.064)	15" (.064)	18" (.064)	24" (.064)	30" (.079)	36" (.079)	42" (.109)	48" (.109)
-L- 12+85																				
(0401-0402)														32						
-L- 15+30																				
(0403-0404)																				
SHEET TOTALS														32						

STATION	R.C. PIPE CLASS III 12"	15"	18"	24"	30"	36"	42"	48"	R.C. PIPE CLASS IV 12"	15"	18"	24"	30"	36"	42"	48"
-L- 12+85																
(0401-0402)																
-L- 15+30																
(0403-0404)										32						
SHEET TOTALS										32						

STATION	** " R.C. PIPE (CLASS V)	"" R.C. PIPE CULVERTS, CONTRACTOR DESIGN	"" R.C. PIPE CULVERTS, CONTRACTOR DESIGN	18" SIDE DRAIN PIPE	ENDWALLS STD. 838.01, STD. 838.11 OR STD. 838.80 (UNLESS NOTED OTHERWISE) CU. YDS. R.C.P.	C.S.P.	QUANTITIES FOR DRAINAGE STRUCTURES PER EACH (0' THRU 5.0')	* TOTAL L.F. FOR PAY QUANTITY SHALL BE COL. 'A' + (1.3 X COL.'B') LIN. FT. A 5.0' THRU 10.0'	B 10.0' AND ABOVE	C.B. STD. 840.01 OR STD. 840.02	FRAME, GRATES AND HOOD STANDARD 840.03 TYPE OF GRATE E	F	G	CONCRETE TRASITIONAL SECTION DROP INLET	CATCH BASIN
-L- 12+85							1								
(0401-0402)															
-L- 15+30							1								
(0403-0404)															
SHEET TOTALS							2								

STATION	D.I. STD. 840.14 OR STD. 840.15	D.I. FRAME & GRATE STD. 840.16	G.D.I. TYPE "A" STD. 840.17 OR 840.26	G.D.I. TYPE "B" STD. 840.18 OR 840.27	G.D.I. TYPE "D" STD. 840.19 OR 840.28	G.D.I. FRAME WITH GRATE STD. 840.20	G.D.I. FRAME WITH TWO GRATE STD. 840.22	G.D.I. (N.S.) FRAME WITH GRATE STD. 840.24	G.D.I. (N.S.) FRAME WITH TWO GRATES STD. 840.29	J.B. STD. 840.31 OR 840.32	TB G.D.I STD. 840.35	F.E.S. FLARED END SECTION STD	CONVERT TO MH	DRAINAGE PIPE ELBOWS NO. & SIZE	DRAINAGE PIPE ELBOWS NO. & SIZE	CONC. & BRICK PIPE PLUG, C.Y. STD. 840.71	CONC. COLLARS CL. "B" C.Y. STD 840.72	PIPE REMOVAL LIN. FT.	REMARKS
-L- 12+85									1		1								
(0401-0402)																		37	REMOVE EXIST. 18" CMP @ -L- 12+00 CL
-L- 15+30									1		1								
(0403-0404)																			
SHEET TOTALS									2		2							37	

ABBREVIATIONS

C.B.	CATCH BASIN
N.D.I.	NARROW DROP INLET
D.I.	DROP INLET
G.D.I.	GRATED DROP INLET
G.D.I. (N.S.)	GRATED DROP INLET (NARROW SLOT)
J.B.	JUNCTION BOX
M.H.	MANHOLE
T.B.D.I.	TRAFFIC BEARING DROP INLET
T.B.J.B.	TRAFFIC BEARING JUNCTION BOX

NOTE: Approximate quantities only. Clearing and Grubbing, Unclassified Excavation, Fine Grading, and Removal of Existing Asphalt Pavement will be paid for at the contract lump sum price for "Grading".

REVISIONS

8/2/2013 3:11:32 PM
G:\DR Projects\DR1100 - NCDOT Group W\430165\Roadway\Proj\430165_RDY_03A_SUMMARY.dgn
G:\CADD\Plot\DR1100\1100_rdy.tbl

THE LOUIS BERGER GROUP, Inc.
1001 Wade Avenue, Suite 400
Raleigh, NC 27605-3322

ROADWAY PLANS

PROJECT REFERENCE NO.	SHEET NO.
17BP.14.R.27	4
R/W SHEET NO.	

ROADWAY DESIGN ENGINEER — NORTH CAROLINA PROFESSIONAL SEAL 16006 ENGINEER DAVID D. HAYFIELD — REGISTERED ENGINEER 8/28/13

HYDRAULICS ENGINEER — NORTH CAROLINA PROFESSIONAL SEAL 20744 ENGINEER DAVID L. SMITH — REGISTERED ENGINEER 8/26/13

0' 20' 40'

NAD 83/NSRS 2007

-L-

PI = 10+63.83
Δ = 5° 01' 47.7" (LT)
D = 7° 09' 43.1"
L = 70.23'
T = 35.14'
R = 800.00'
SE = 0.05

PI = 13+14.11
Δ = 35° 02' 12.5" (RT)
D = 16° 22' 12.8"
L = 214.03'
T = 110.48'
R = 350.00'
SE = 0.06

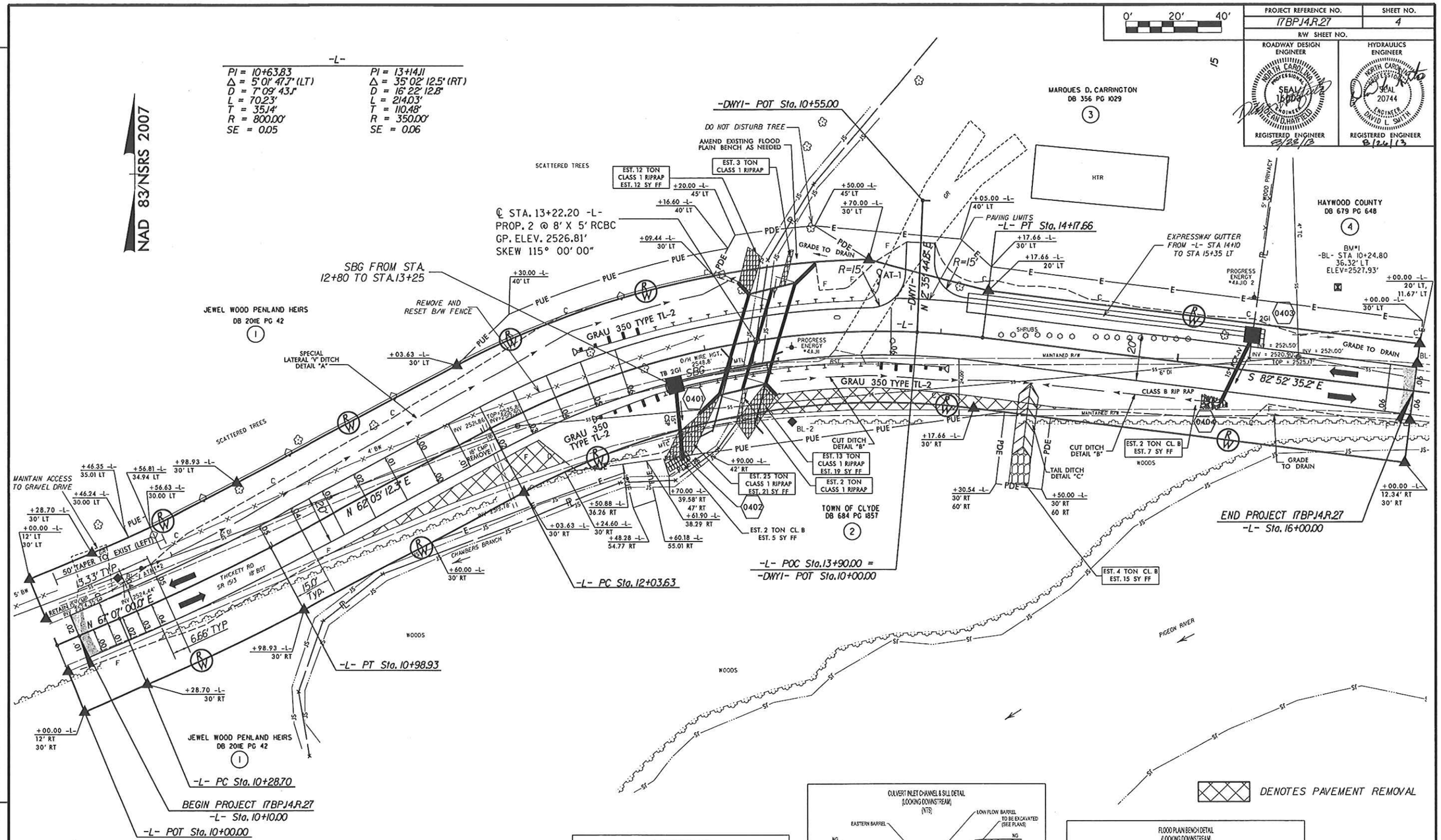

DETAIL A
SPECIAL LATERAL 'V' DITCH
(Not to Scale)

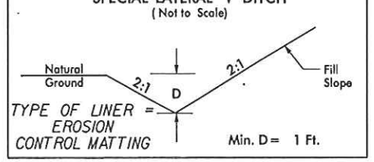

FROM STA. 10+50 LT. TO STA. 13+25 LT.

DETAIL B
CUT DITCH
(Not to Scale)

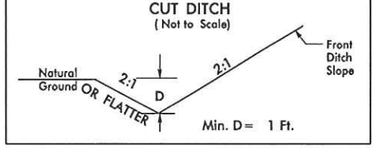

FROM STA. 13+30 RT. TO STA. 15+20 RT.

DETAIL C
STANDARD 'V' DITCH
(Not to Scale)

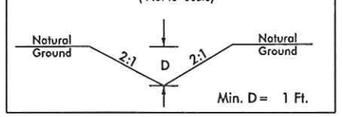

TAIL DITCH AT STA. 14+40 RT.
D.D.E. = 12 C.Y.

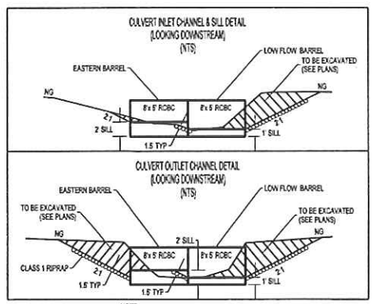

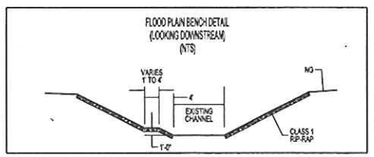

SEE SHEET 5 FOR PROFILE
SEE SHEETS C-1 THRU C-8 FOR CULVERT PLANS

Rivers

THE LOUIS BERGER GROUP, Inc.
1001 Wade Avenue, Suite 400
Raleigh, NC 27605-3322

ROADWAY PLANS

REVISIONS

8/2/2013 3:11:41 PM
G:\OR Projects\OR1100 - NCDOT Group W\430165\Roadway\Proj\430165_RDY_04_PSH.dgn
G:\CADD\Plots\OR1100\1100_rdy.tbl

5/28/99

Rivers & Associates, Inc. Since 1978

THE LOUIS BERGER GROUP, Inc.
1001 Wade Avenue, Suite 400
Raleigh, North Carolina 27605

PROJECT REFERENCE NO.	SHEET NO.
17BP.14.R.27	5

ROADWAY DESIGN ENGINEER — NORTH CAROLINA PROFESSIONAL SEAL 16081 ENGINEER JOHN D. HARRIS — REGISTERED ENGINEER 8/2/2013

HYDRAULICS ENGINEER — NORTH CAROLINA PROFESSIONAL SEAL 20744 ENGINEER DAVID L. SMITH — REGISTERED ENGINEER 8/2/2013

0 20 40 HORIZONTAL

0 4 8 VERTICAL

CULVERT HYDRAULIC DATA

DESIGN DISCHARGE	=	400	CFS
DESIGN FREQUENCY	=	25	YRS
DESIGN HW ELEVATION	=	2525.5	FT
BASE DISCHARGE	=	600	CFS
BASE FREQUENCY	=	100	YRS
BASE HW ELEVATION	=	2527.7	FT
OVERTOPPING DISCHARGE	=	580	CFS
OVERTOPPING FREQUENCY	=	100	YRS
OVERTOPPING ELEVATION	=	2527.6	FT
DATE OF SURVEY	=	1/6/2012	
W.S. ELEVATION AT DATE OF SURVEY	=	2521.3	FT

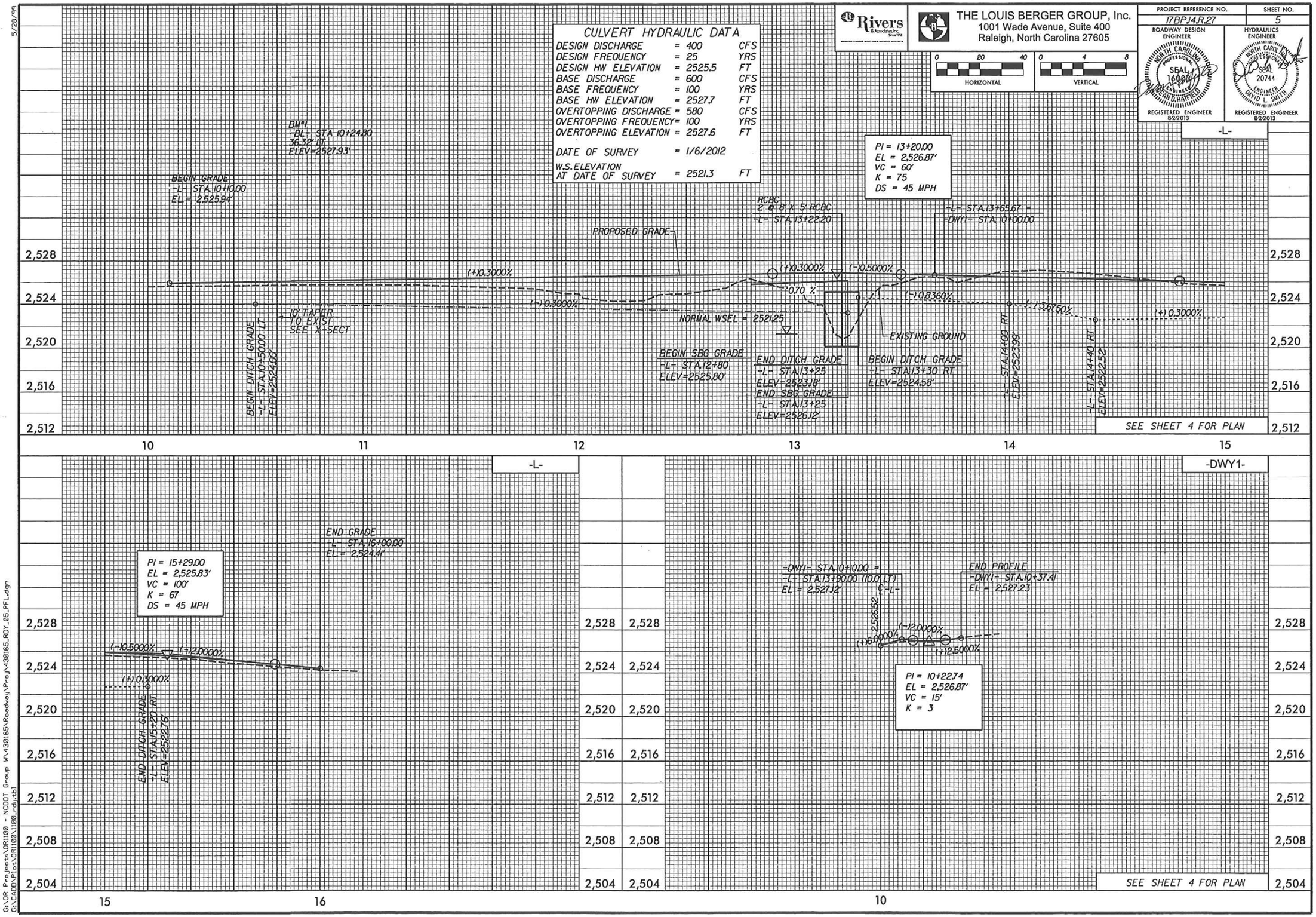

8/2/2013 3:11:43 PM
G:\DR Projects\DR1100 - NCDOT Group W\430165\Roadway\Proj\430165_RDY_05_PFL.dgn
G:\CADD\Plot\DR1100\1100_rdy.tbl

STATE OF NORTH CAROLINA
DIVISION OF HIGHWAYS

TRANSPORTATION MANAGEMENT PLAN

HAYWOOD COUNTY

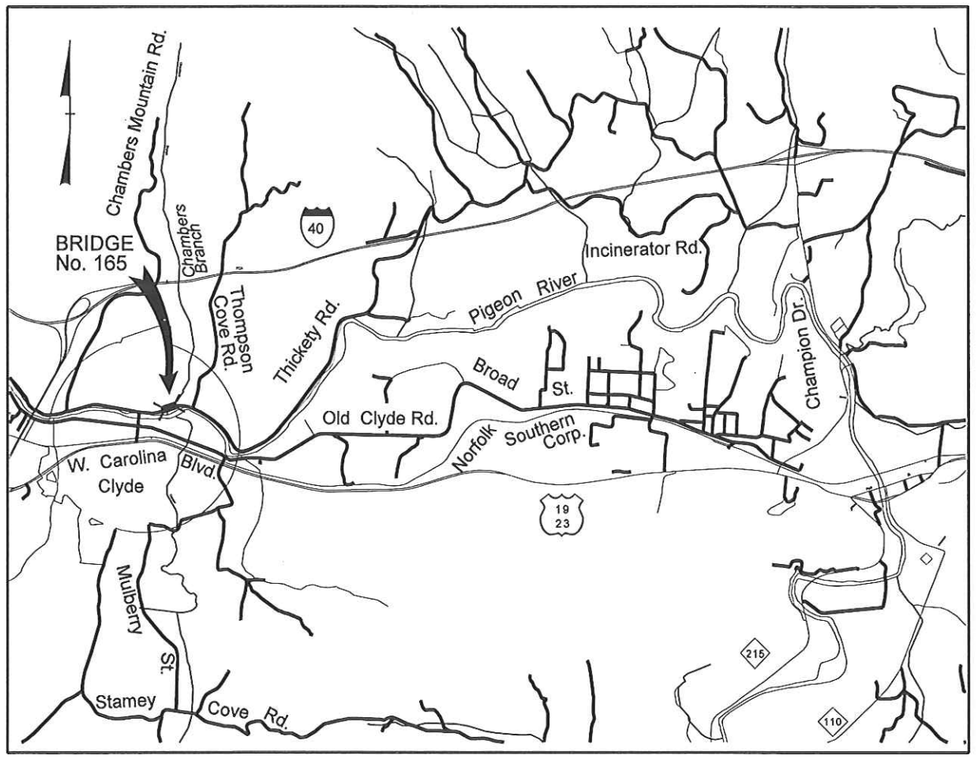

VICINITY MAP NTS

LOCATION: BRIDGE NO. 165 ON SR 1513 OVER CHAMBERS BRANCH

INDEX OF SHEETS

SHEET NO.	TITLE
TMP-1	TITLE SHEET, AND INDEX OF SHEETS
TMP-1A	LIST OF APPLICABLE ROADWAY STANDARD DRAWINGS, LEGEND, AND TEMPORARY PAVEMENT MARKING
TMP-1B	TRANSPORTATION OPERATIONS PLAN: (MANAGEMENT STRATEGIES, GENERAL NOTES AND LOCAL NOTES)
TMP-2	TEMPORARY TRAFFIC CONTROL PHASING
TMP-3	TEMPORARY TRAFFIC CONTROL PHASE I DETAIL
TMP-4	TEMPORARY TRAFFIC CONTROL PHASE II DETAIL

SHEET NO.
TMP-1

PROJECT: 17BP.14.R.27

THE LOUIS BERGER GROUP, Inc.
1001 Wade Avenue, Suite 400
Raleigh, North Carolina 27605

APPROVED: [signature]
DATE: 8/23/13

SEAL

NORTH CAROLINA PROFESSIONAL SEAL 16003 ENGINEER DEAN D. HATFIELD

WORK ZONE SAFETY & MOBILITY
"from the MOUNTAINS to the COAST"

N.C.D.O.T. WORK ZONE TRAFFIC CONTROL
1561 MAIL SERVICE CENTER (MSC) RALEIGH, NC 27699-1561
750 N. GREENFIELD PARKWAY, GARNER, NC 27529 (DELIVERY)
PHONE: (919) 773-2800 FAX: (919) 771-2745

J. S. BOURNE, P.E. — *STATE TRAFFIC MANAGEMENT ENGINEER*
D. HATFIELD, P.E. — *TRAFFIC CONTROL PROJECT ENGINEER*
C. WHITE, P.E. — *TRAFFIC CONTROL PROJECT DESIGN ENGINEER*
_____ — *TRAFFIC CONTROL DESIGN ENGINEER*

DIVISION OF HIGHWAYS · STATE OF NORTH CAROLINA · DEPARTMENT OF TRANSPORTATION · WORK ZONE TRAFFIC CONTROL

$$$$$$SYSTIME$$$$$$
$$$$$$USERNAME$$$$$$

PROJ. REFERENCE NO.	SHEET NO.
17BP.14.R.27	TMP-1A

ROADWAY STANDARD DRAWINGS

THE FOLLOWING ROADWAY STANDARDS AS SHOWN IN "ROADWAY STANDARD DRAWINGS" - PROJECT SERVICES UNIT - N.C. DEPARTMENT OF TRANSPORTATION - RALEIGH, N.C., DATED JANUARY 2012 ARE APPLICABLE TO THIS PROJECT AND BY REFERENCE HEREBY ARE CONSIDERED A PART OF THESE PLANS:

STD. NO.	TITLE
1101.01	WORK ZONE WARNING SIGNS
1101.02	TEMPORARY LANE CLOSURES
1101.05	WORK ZONE VEHICLE ACCESSES
1110.01	STATIONARY WORK ZONE SIGNS
1130.01	DRUMS
1145.01	BARRICADES
1160.01	TEMPORARY CRASH CUSHION
1170.01	PORTABLE CONCRETE BARRIER
1205.01	PAVEMENT MARKINGS - LINE TYPES AND OFFSETS
1205.02	PAVEMENT MARKINGS - TWO LANE AND MULTILANE ROADWAYS
1261.01	GUARDRAIL AND BARRIER DELINEATORS - INSTALLATION SPACING
1261.02	GUARDRAIL AND BARRIER DELINEATORS - TYPES AND MOUNTING

LEGEND

GENERAL

DIRECTION OF TRAFFIC FLOW

NORTH ARROW

REMOVAL

TRAFFIC CONTROL DEVICES

BARRICADE (TYPE III)

DRUM

TEMPORARY CRASH CUSHION

TEMPORARY SIGNING

STATIONARY SIGN

SIGNALS

TEMPORARY

TEMPORARY PAVEMENT MARKING

PAINT 4"

PA WHITE EDGELINE

STOPBAR

P4 24" WHITE STOPBAR

APPROVED: Dean Hatfield DATE: 8/23/13

SEAL

NORTH CAROLINA PROFESSIONAL SEAL 16003 ENGINEER DEAN D. HATFIELD

DIVISION OF HIGHWAYS STATE OF NORTH CAROLINA DEPARTMENT OF TRANSPORTATION WORK ZONE TRAFFIC CONTROL SEAL

ROADWAY STANDARD DRAWINGS & LEGEND

$$$$$$SYSTIME$$$$
$$$$$$SPEC$$$$DGN
$$$$$$USERNAME$$$$

PROJ. REFERENCE NO.	SHEET NO.
17BP.14.R.27	TMP-1B

MANAGEMENT STRATEGIES

-DURING CONSTRUCTION, SR 1513 (THICKETY ROAD) TRAFFIC WILL BE PLACED IN A ONE LANE, TWO WAY PATTERN PER NCDOT.

-TEMPORARY SIGNALS AT THE BEGINNING AND END OF CONSTRUCTION WILL MANAGE SR 1513 TRAFFIC.

-THE CONSTRUCTION OF TIE INS, TRAFFIC SHIFTS, PLACEMENT OF FINAL SURFACE COURSE AND PAVEMENT MARKINGS WILL BE PERFORMED USING FLAGGERS FOR ONE LANE, TWO WAY TRAFFIC OPERATION.

-ACCESS SHALL BE MAINTAINED AT ALL TIMES TO ALL DRIVEWAYS WITHIN PROJECT LIMITS DURING CONSTRUCTION.

GENERAL NOTES / LOCAL NOTES

CHANGES MAY BE REQUIRED WHEN PHYSICAL DIMENSIONS IN THE DETAIL DRAWINGS, STANDARD DETAILS, AND ROADWAY DETAILS ARE NOT ATTAINABLE TO MEET FIELD CONDITIONS OR RESULT IN DUPLICATE OR UNDESIRED OVERLAPPING OF DEVICES. MODIFICATION MAY INCLUDE: MOVING, SUPPLEMENTING, COVERING, OR REMOVAL OF DEVICES AS DIRECTED BY THE ENGINEER.

THE FOLLOWING GENERAL NOTES APPLY AT ALL TIMES FOR THE DURATION OF THE CONSTRUCTION PROJECT EXCEPT WHEN OTHERWISE NOTED IN THE PLAN OR DIRECTED BY THE ENGINEER.

LANE AND SHOULDER CLOSURE REQUIREMENTS

A) REMOVE LANE CLOSURE DEVICES FROM THE LANE WHEN WORK IS NOT BEING PERFORMED BEHIND THE LANE CLOSURE OR WHEN A LANE CLOSURE IS NO LONGER NEEDED OR AS DIRECTED BY THE ENGINEER.

B) WHEN PERSONNEL AND/OR EQUIPMENT ARE WORKING WITHIN A LANE OF TRAVEL OF AN UNDIVIDED OR DIVIDED FACILITY, CLOSE THE LANE ACCORDING TO THE TRAFFIC CONTROL PLANS, ROADWAY STANDARD DRAWINGS, OR AS DIRECTED BY THE ENGINEER. CONDUCT THE WORK SO THAT ALL PERSONNEL AND/OR EQUIPMENT REMAIN WITHIN THE CLOSED TRAVEL LANE.

C) DO NOT WORK SIMULTANEOUSLY WITHIN 15 FT ON BOTH SIDES OF AN OPEN TRAVELWAY, RAMP, OR LOOP WITHIN THE SAME LOCATION UNLESS PROTECTED WITH GUARDRAIL OR BARRIER.

PAVEMENT EDGE DROP OFF REQUIREMENTS

D) BACKFILL AT A 6:1 SLOPE UP TO THE EDGE AND ELEVATION OF EXISTING PAVEMENT IN AREAS ADJACENT TO AN OPENED TRAVEL LANE THAT HAS AN EDGE OF PAVEMENT DROP-OFF AS FOLLOWS:

BACKFILL DROP-OFFS THAT EXCEED 2 INCHES ON ROADWAYS WITH POSTED SPEED LIMITS OF 45 MPH OR GREATER.

BACKFILL DROP-OFFS THAT EXCEED 3 INCHES ON ROADWAYS WITH POSTED SPEED LIMITS LESS THAN 45 MPH.

BACKFILL WITH SUITABLE COMPACTED MATERIAL, AS APPROVED BY THE ENGINEER, AT NO EXPENSE TO THE DEPARTMENT.

E) DO NOT EXCEED A DIFFERENCE OF 2 INCHES IN ELEVATION BETWEEN OPEN LANES OF TRAFFIC FOR NOMINAL LIFTS OF 1.5 INCHES. INSTALL ADVANCE WARNING "UNEVEN LANES" SIGNS (W8-11) IN ADVANCE AND A MINIMUM OF EVERY HALF MILE THROUGHOUT THE UNEVEN AREA.

TRAFFIC PATTERN ALTERATIONS

F) NOTIFY THE ENGINEER TWENTY ONE (21) CALENDAR DAYS PRIOR TO ANY TRAFFIC PATTERN ALTERATION.

SIGNING

G) INSTALL ADVANCE WORK ZONE WARNING SIGNS WHEN WORK IS WITHIN 40 FT FROM THE EDGE OF TRAVEL LANE AND NO MORE THAN THREE (3) DAYS PRIOR TO THE BEGINNING OF CONSTRUCTION.

H) ENSURE ALL NECESSARY SIGNING IS IN PLACE PRIOR TO ALTERING ANY TRAFFIC PATTERN.

TRAFFIC BARRIER

I) INSTALL TEMPORARY BARRIER ACCORDING TO THE TRAFFIC CONTROL PLANS A MAXIMUM OF TWO (2) WEEKS PRIOR TO BEGINNING WORK IN ANY LOCATION. ONCE TEMPORARY BARRIER IS INSTALLED AT ANY LOCATION PROCEED IN A CONTINUOUS MANNER TO COMPLETE THE PROPOSED WORK IN THAT LOCATION UNLESS OTHERWISE STATED IN THE TRAFFIC CONTROL PLANS OR AS DIRECTED BY THE ENGINEER.

DO NOT PLACE BARRIER DIRECTLY ON ANY SURFACE OTHER THAN ASPHALT OR CONCRETE.

ONCE TEMPORARY BARRIER IS INSTALLED AT ANY LOCATION AND NO WORK IS PERFORMED BEHIND THE TEMPORARY BARRIER FOR A PERIOD LONGER THAN TWO (2) MONTHS, REMOVE/RESET TEMPORARY BARRIER AT NO COST TO THE DEPARTMENT UNLESS OTHERWISE STATED IN THE TRAFFIC CONTROL PLANS, TEMPORARY BARRIER IS PROTECTING A HAZARD, OR AS DIRECTED BY THE ENGINEER.

INSTALL TEMPORARY BARRIER WITH THE TRAFFIC FLOW BEGINNING WITH THE UPSTREAM SIDE OF TRAFFIC. REMOVE TEMPORARY BARRIER AGAINST THE TRAFFIC FLOW BEGINNING WITH THE DOWNSTREAM SIDE OF TRAFFIC.

INSTALL AND SPACE DRUMS NO GREATER THAN TWICE THE POSTED SPEED LIMIT (MPH) TO CLOSE OR KEEP THE SECTION OF THE ROADWAY CLOSED UNTIL THE TEMPORARY BARRIER CAN BE PLACED OR AFTER THE TEMPORARY BARRIER IS REMOVED.

J) PROTECT THE APPROACH END OF MOVABLE/PORTABLE CONCRETE BARRIER AT ALL TIMES DURING THE INSTALLATION AND REMOVAL OF THE BARRIER BY EITHER A TRUCK MOUNTED IMPACT ATTENUATOR (MAXIMUM 72 HOURS) OR A TEMPORARY CRASH CUSHION.

PROTECT THE APPROACH END OF MOVABLE/PORTABLE CONCRETE BARRIER FROM ONCOMING TRAFFIC AT ALL TIMES BY A TEMPORARY CRASH CUSHION UNLESS THE APPROACH END OF MOVABLE/PORTABLE CONCRETE BARRIER IS OFFSET FROM ONCOMING TRAFFIC AS FOLLOWS OR AS SHOWN IN THE PLANS:

POSTED SPEED LIMIT	MINIMUM OFFSET
40 OR LESS	15 FT
45 - 50	20 FT
55	25 FT
60 MPH or HIGHER	30 FT

TRAFFIC CONTROL DEVICES

K) WHEN LANE CLOSURES ARE NOT IN EFFECT SPACE CHANNELIZING DEVICES IN WORK AREAS NO GREATER IN FEET THAN TWICE THE POSTED SPEED LIMIT (MPH) EXCEPT, 10 FT ON-CENTER IN RADII, AND 3 FT OFF THE EDGE OF AN OPEN TRAVELWAY. REFER TO STANDARD SPECIFICATIONS FOR ROADS AND STRUCTURES SECTIONS 1130 (DRUMS), 1135 (CONES) AND 1180 (SKINNY DRUMS) FOR ADDITIONAL REQUIREMENTS.

L) PLACE TYPE III BARRICADES, WITH "ROAD CLOSED" SIGN R11-2 ATTACHED, OF SUFFICIENT LENGTH TO CLOSE ENTIRE ROADWAY.

M) INSTALL TEMPORARY PAVEMENT MARKINGS AND TEMPORARY PAVEMENT MARKERS ON INTERIM LAYERS OF PAVEMENT AS FOLLOWS:

ROAD NAME	MARKING	MARKER
-L- THICKETY ROAD	PAINT	NONE

N) PLACE ONE APPLICATION OF PAINT FOR TEMPORARY TRAFFIC PATTERNS. PLACE A SECOND APPLICATION OF PAINT SIX (6) MONTHS AFTER THE INITIAL APPLICATION AND EVERY SIX MONTHS AS DIRECTED BY THE ENGINEER.

O) TIE PROPOSED PAVEMENT MARKING LINES TO EXISTING PAVEMENT MARKING LINES.

P) REMOVE/REPLACE ANY CONFLICTING/DAMAGED PAVEMENT MARKINGS AND MARKERS BY THE END OF EACH DAY'S OPERATION.

MISCELLANEOUS

Q) IN THE EVENT A TIE-IN CANNOT BE MADE IN ONE DAY'S TIME, BRING THE TIE-IN AREA TO AN APPROPRIATE ROADWAY ELEVATION AS DETERMINED BY THE ENGINEER. PLACE BLACK ON ORANGE "LOOSE GRAVEL" SIGNS (W8-7) AND BLACK ON ORANGE "PAVEMENT ENDS" SIGNS (W8-3) AND RESPECTIVELY IN ADVANCE OF THE UNEVEN AREAS. USE DRUMS TO DELINEATE THE EDGE OF ROADWAY ALONG UNPAVED AREAS.

APPROVED: Dean Hatfield DATE: 8/22/13

SEAL

NORTH CAROLINA PROFESSIONAL SEAL 16003 ENGINEER DEAN D. HATFIELD

DIVISION OF HIGHWAYS STATE OF NORTH CAROLINA DEPARTMENT OF TRANSPORTATION WORK ZONE TRAFFIC CONTROL

GENERAL NOTES

$$$$$$SYSTIME$$$$$$
$$$$$$USERNAME$$$$$$

PROJECT PHASING

MAINTAIN ACCESS TO -DWY1- AND ALL RESIDENCES WITHIN THE PROJECT LIMITS AT ALL TIMES.

PHASE I

STEP 1:
INSTALL ADVANCE WORK ZONE WARNING SIGNS USING RDWY STD 1101.01, SHEET 3 OF 3.

STEP 2:
TO BE COMPLETED IN ONE WORK PERIOD. USING RDWY STD 1101.02, SHEET 1 OF 15, PERFORM THE FOLLOWING ON SR 1513:

- CONSTRUCT/INSTALL TEMPORARY TRAFFIC SIGNAL.
- PLACE TEMPORARY MARKINGS ON EXISING SR 1513 FOR A TEMPORARY ONE LANE, TWO WAY TRAFFIC PATTERN. (SEE SHEET TMP-3)
- INSTALL ADDITIONAL SIGNS FOR TEMPORARY TRAFFIC SIGNAL, ACTIVATE THE SIGNAL AND SHIFT TRAFFIC TO THE TEMPORARY ONE LANE, TWO WAY PATTERN.

STEP 3:
USING RDWY STD 1101.02, SHEET 1 OF 15, PERFORM THE FOLLOWING ON SR 1513:

- CONSTRUCT PHASE I OF PROPOSED CULVERT. (SEE STRUCTURE PLANS)
- CONSTRUCT PHASE I OF PROPOSED ROADWAY FROM -L- STA 11+75+/- TO -L- STA 15+00+/- UP TO, BUT NOT INCLUDING THE FINAL LAYER OF SURFACE COURSE AND -DWY1-.

STEP 4:
USING FLAGGERS, RDWY STD 1101.02, SHEET 1 OF 15, CONSTRUCT TIE INS FROM -L- STA 10+10+/- TO -L- STA 11+75+/- AND FROM -L- STA 15+00+/- TO -L- STA 16+00+/-.

INSTALL PORTABLE CONCRETE BARRICADE AND CRASH CUSHIONS FROM -L- STA 11+05+/- TO -L- STA 15+10+/-. (SEE SHEET TMP-4)

PLACE TEMPORARY PAVEMENT MARKINGS (PAINT) ON -L- FOR A TEMPORARY ONE LANE, TWO WAY TRAFFIC PATTERN.

PHASE II

STEP 1:
USING RDWY STD 1101.02 SHEET 1 OF 15, PERFORM THE FOLLOWING ON SR 1513:

-RETAIN ADVANCE WORK ZONE SIGNS AND TEMPORARY TRAFFIC SIGNAL FROM PHASE I.

-REMOVE THE EXISTING BRIDGE IN ACCORDANCE WITH ROADWAY AND STRUCTURE PLANS.

-CONSTRUCT PHASE II OF PROPOSED CULVERT. (SEE STRUCTURE PLANS)

-CONSTRUCT PHASE II OF PROPOSED ROADWAY FROM -L- STA. 10+90+/- TO STA. 15+15+/-, UP TO, BUT NOT INCLUDING THE FINAL LAYER OF SURFACE COURSE. (SEE SHEET TMP-4)

STEP 2:
USING FLAGGERS, RDWY STD 1101.02, SHEET 1 OF 15, REMOVE PORTABLE CONCRETE BARRIER AND CRASH CUSHIONS. PLACE THE FINAL LAYER OF SURFACE COURSE AND FINAL PAVEMENT MARKINGS ON PROPOSED -L- FROM STA 10+10+/- TO STA 16+00+/- IN ONE WORK PERIOD AND HAVE TRAFFIC ON NEWLY CONSTRUCTED CULVERT AND ROADWAY AT THE END OF THAT WORK PERIOD.

STEP 3:
COMPLETE REMOVAL OF ANY REMAINING ROADWAY AND STRUCTURE. REMOVE ALL TEMPORARY TRAFFIC CONTROL DEVICES AND OPEN -L- TO THE FINAL PATTERN.

APPROVED: Dean Hatfield DATE: 8/23/13

SEAL

NORTH CAROLINA PROFESSIONAL SEAL 16003 ENGINEER DEAN D. HATFIELD

DIVISION OF HIGHWAYS · STATE OF NORTH CAROLINA · DEPARTMENT OF TRANSPORTATION · WORK ZONE TRAFFIC CONTROL

TEMPORARY TRAFFIC CONTROL PHASING

$$$$$SYSTIME$$$$$
$$$$$$$$$DGN$$$$$$$$$$$$$$$$
$$$USERNAME$$$$

PROJ. REFERENCE NO.	SHEET NO.
17BP.14.R.27	TMP-3

A-A

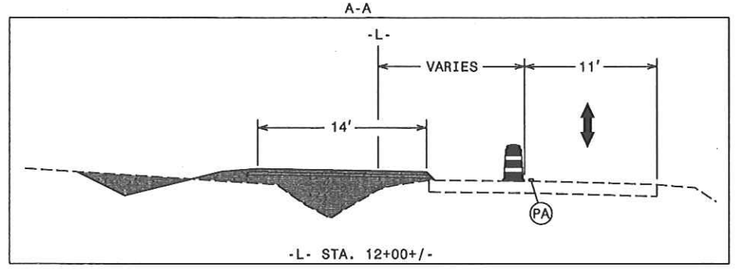

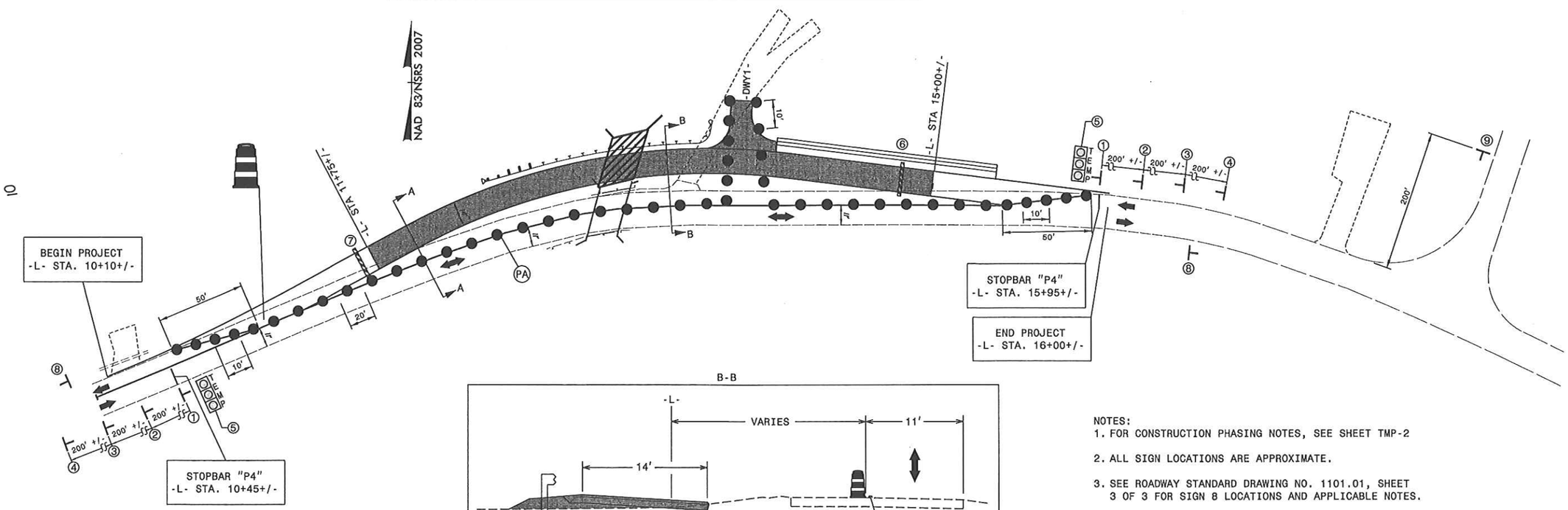

B-B

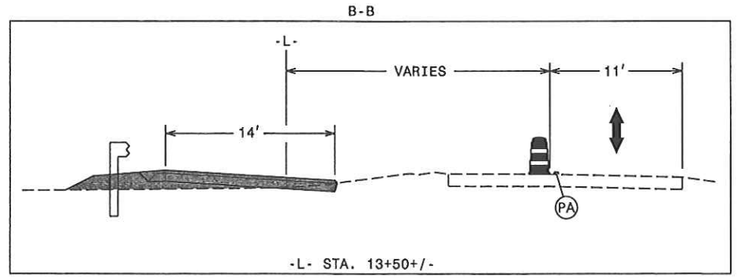

NOTES:
1. FOR CONSTRUCTION PHASING NOTES, SEE SHEET TMP-2
2. ALL SIGN LOCATIONS ARE APPROXIMATE.
3. SEE ROADWAY STANDARD DRAWING NO. 1101.01, SHEET 3 OF 3 FOR SIGN 8 LOCATIONS AND APPLICABLE NOTES.

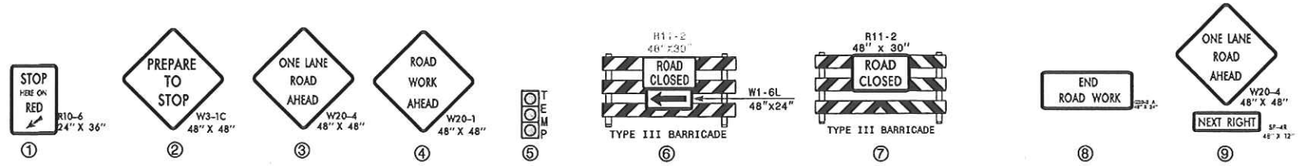

THE LOUIS BERGER GROUP, Inc.
1001 Wade Avenue, Suite 400
Raleigh, North Carolina 27605

APPROVED: Dean Hatfield DATE: 8/23/13

SEAL

TEMPORARY TRAFFIC CONTROL PHASE I

$$$$$SYSTIME$$$$$
$$$$$$$$$$$$$$$$$DGN$$$$$$$$$$$$$$$$$
$$$$$USERNAME$$$

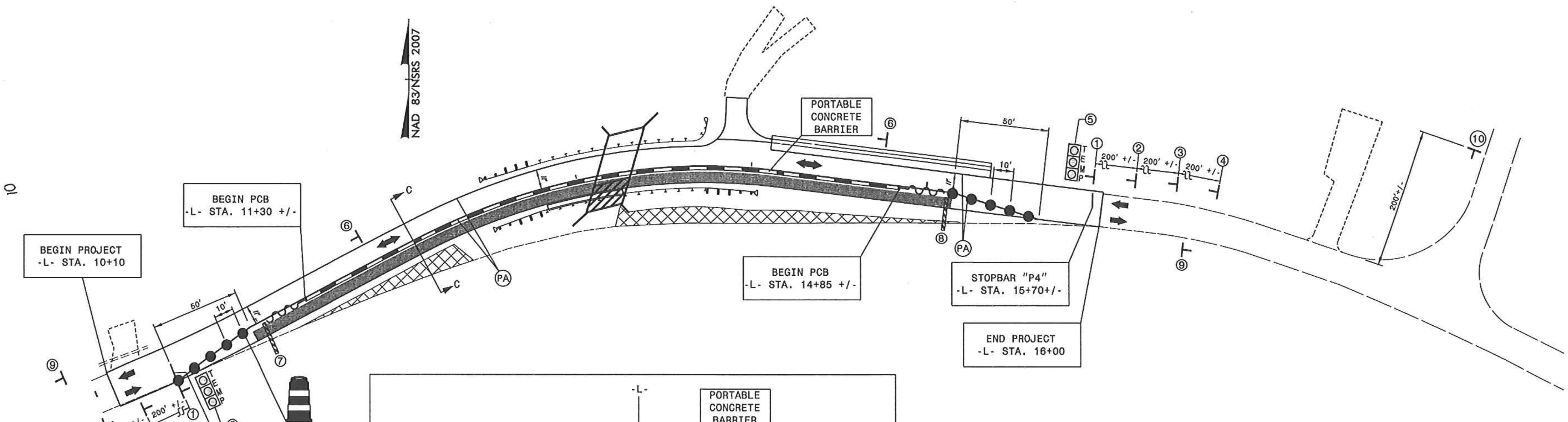

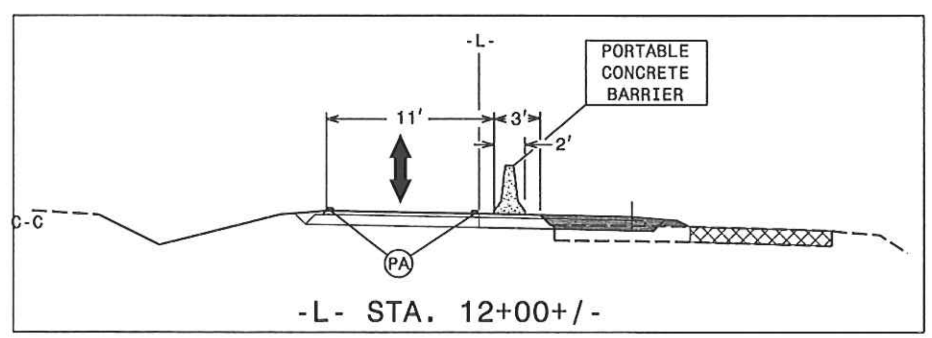

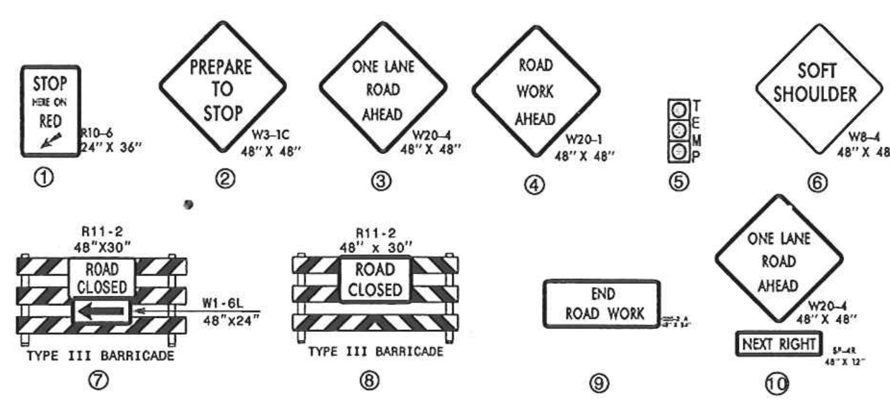

NOTES:

1. FOR CONSTRUCTION PHASING NOTES, SEE SHEET TMP-2
2. ALL SIGN LOCATIONS ARE APPROXIMATE.
3. SEE ROADWAY STANDARD DRAWING NO. 1101.01, SHEET 3 OF 3 FOR SIGN 9 LOCATIONS AND APPLICABLE NOTES.
4. ALL PCB SECTIONS CROSSING CULVERT SHALL BE FULLY ANCHORED. SEE STRUCTURE PLANS FOR DETAIL.
5. ALL PCB SHALL BE DRAINAGE BARRIER.

THE LOUIS BERGER GROUP, Inc.
1001 Wade Avenue, Suite 400
Raleigh, North Carolina 27605

APPROVED: Dean Hatfield DATE: 8/23/13

SEAL

NORTH CAROLINA PROFESSIONAL SEAL 16003 ENGINEER DEAN D. HATFIELD

DIVISION OF HIGHWAYS · STATE OF NORTH CAROLINA · DEPARTMENT OF TRANSPORTATION · WORK ZONE TRAFFIC CONTROL

TEMPORARY TRAFFIC CONTROL PHASE II

$$$$$$SYSTIME$$$$$
$$$$$$$$$$$$DGN$$$$$$$$$$$$$$$$$
$$$$USERNAME$$$$

STATE	PROJECT NO.	SHEET NO.	TOTAL SHTS.
N.C.	17BP.14.R.27	PMP-1	2

APPROVED: Dean D. Hatfield
DATE: 8/23/13
SEAL

NORTH CAROLINA PROFESSIONAL SEAL 16003 ENGINEER DEAN D. HATFIELD

STATE OF NORTH CAROLINA
DEPARTMENT OF TRANSPORTATION

PAVEMENT MARKING PLANS

LOCATION: BRIDGE NO. 165 ON SR 1513 OVER CHAMBERS BRANCH, HAYWOOD COUNTY

ROADWAY STANDARD DRAWINGS

THE FOLLOWING ROADWAY STANDARDS AS APPEAR IN "ROADWAY STANDARD DRAWINGS"-ROADWAY DESIGN UNIT-N.C. DEPARTMENT OF TRANSPORTATION-RALEIGH, N.C., DATED JULY 2012 ARE APPLICABLE TO THIS PROJECT AND BY REFERENCE HEREBY ARE CONSIDERED A PART OF THESE PLANS:

STD. NO.	TITLE
1205.01	PAVEMENT MARKINGS - LINE TYPES & OFFSETS
1205.02	PAVEMENT MARKINGS - 2 LANE & MULTILANE ROADWAYS
1261.01	GUARDRAIL AND BARRIER DELINATION SPACING
1261.02	GUARDRAIL AND BARRIER DELINATION TYPES
1262.02	GUARDRAIL END DELINATION

PAVEMENT MARKING SCHEDULE

ASPHALT PAVEMENT DESIGN
(AS SHOWN)

PAVEMENT MARKING LINES

PA - PAINT - WHITE EDGELINE (4")
PI - PAINT - YELLOW DOUBLE CENTER LINE (4")

GENERAL NOTES

THE FOLLOWING NOTES APPLY AT ALL TIMES FOR THE DURATION OF THE CONSTRUCTION PROJECT, EXCEPT WHEN NOTED IN THE PLAN, OR DIRECTED BY THE ENGINEER.

A) INSTALL PAVEMENT MARKINGS AND PAVEMENT MARKERS ON THE FINAL SURFACE AS FOLLOWS:

ASPHALT PAVEMENT DESIGN:

ROAD NAME	MARKING	MARKER
ALL	PAINT	NONE

B) TIE PROPOSED PAVEMENT MARKING LINES TO EXISTING PAVEMENT MARKING LINES.

C) REMOVE/ REPLACE ANY CONFLICTING/ DAMAGED PAVEMENT MARKINGS AND MARKERS.

INDEX

SHEET NO.	DESCRIPTION
PMP-1	PAVEMENT MARKING PLAN COVER SHEET
PMP-2	PAVEMENT MARKING DETAIL

THE LOUIS BERGER GROUP, Inc.
1001 Wade Avenue, Suite 400
Raleigh, NC 27605-3322

ROADWAY PLANS

STATE	PROJECT NO.	SHEET NO.	TOTAL SHTS.
N.C.	17BP.14.R.27	PMP-2	2

APPROVED: Dean Hatfield
DATE: 8/23/13
SEAL

NORTH CAROLINA PROFESSIONAL SEAL 16003 ENGINEER DEAN D. HATFIELD

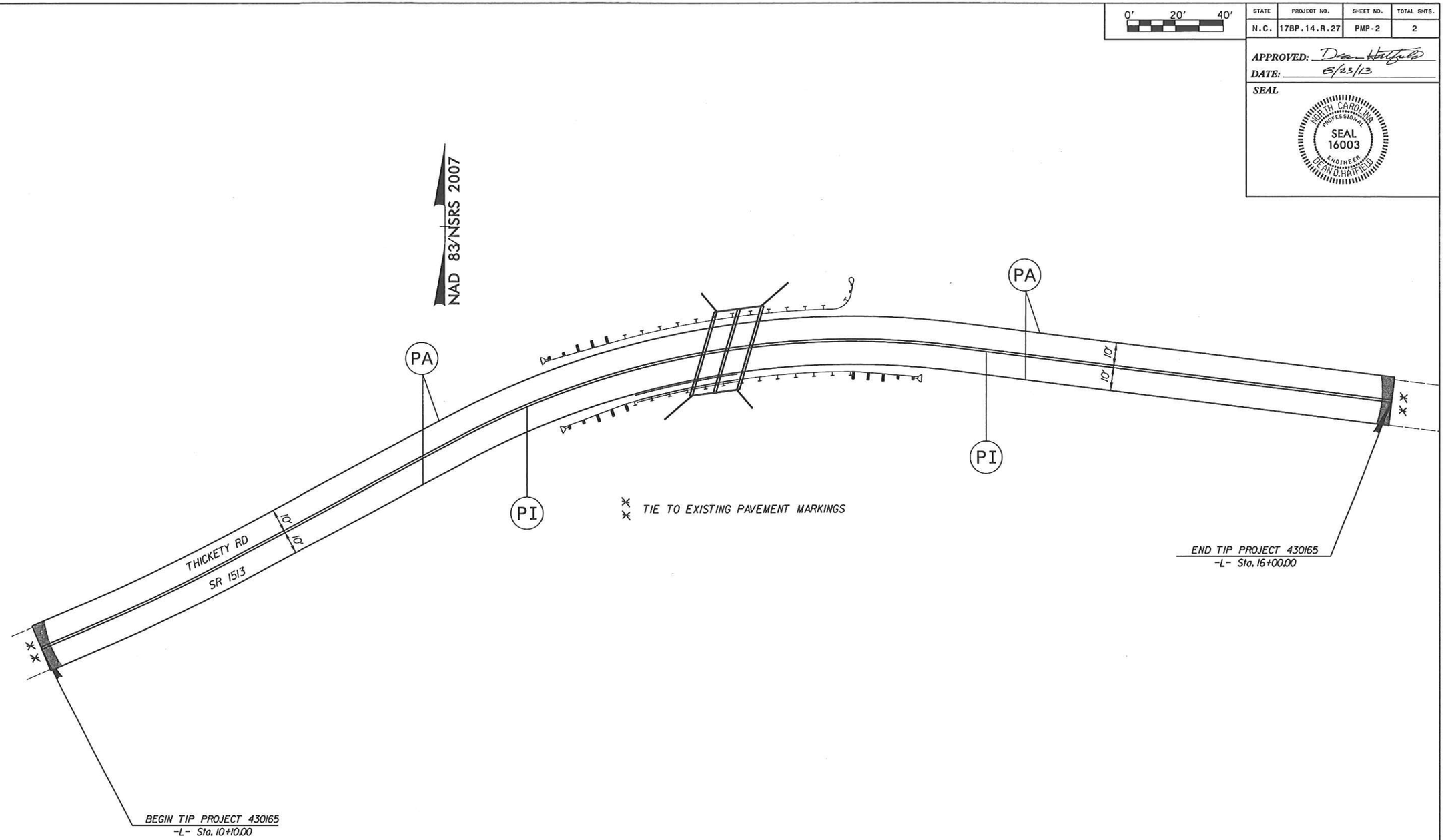

LEGEND

(PA) - PAINT - WHITE EDGELINE (4")

(PI) - PAINT - YELLOW DOUBLE CENTER LINE (4")

PAVEMENT MARKING DETAIL
THICKETY RD

THE LOUIS BERGER GROUP, Inc.
1001 Wade Avenue, Suite 400
Raleigh, NC 27605-3322

ROADWAY PLANS

PROJECT REFERENCE NO.	SHEET NO.
17BPJ4.R.27	EC-01/CONST.04
R/W SHEET NO.	

EROSION CONTROL PLANS

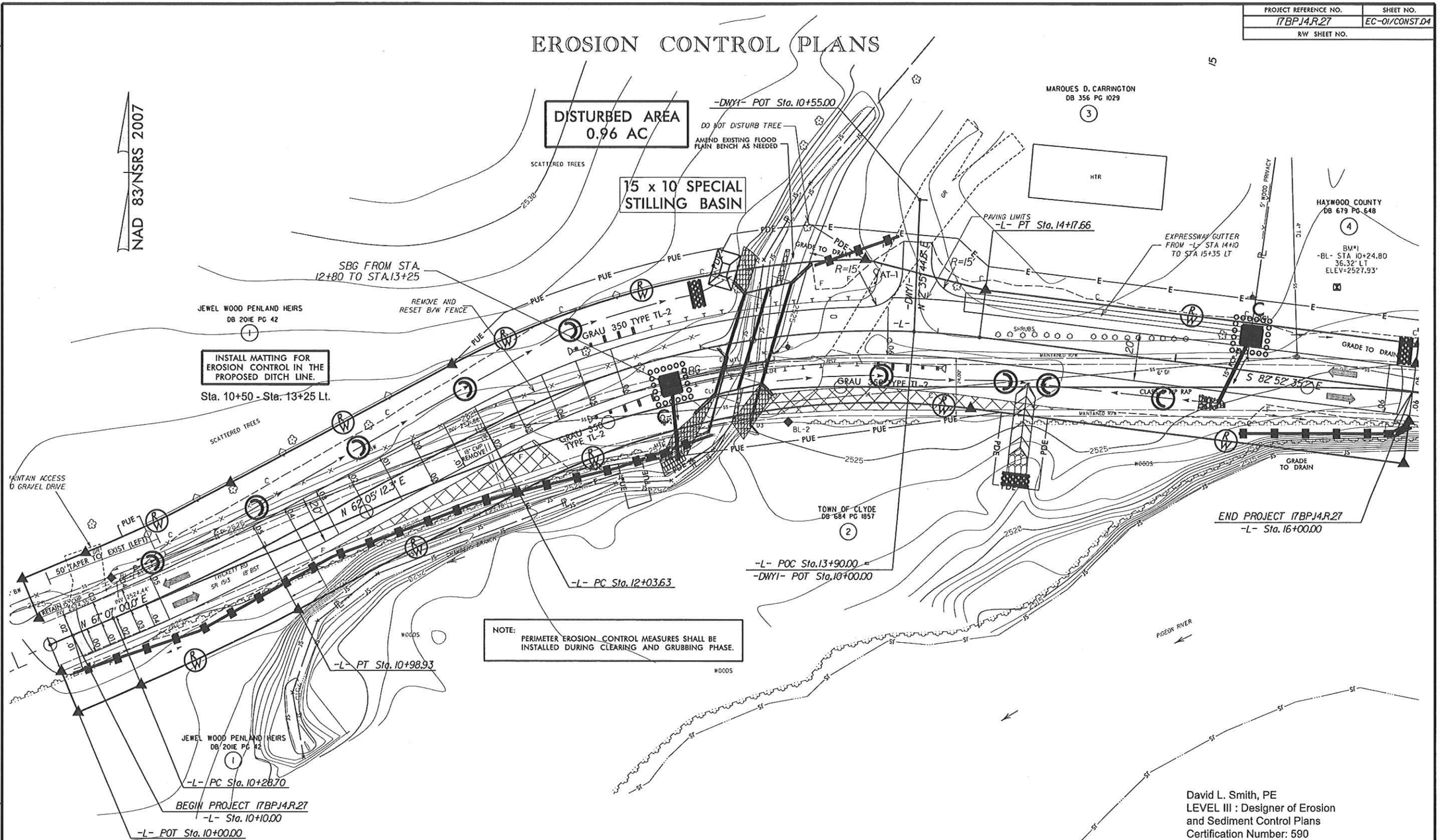

NOTE: PERIMETER EROSION CONTROL MEASURES SHALL BE INSTALLED DURING CLEARING AND GRUBBING PHASE.

Std. #	Description	Symbol
1605.01	Temporary Silt Fence	
1606.01	Special Sediment Control Fence	
1630.06	Special Stilling Basin	
1632.03	Rock Inlet Sediment Trap Type C	
1633.01	Temporary Rock Silt Check, Type A	
	Wattle with Polyacrylamide (PAM)	

NOTE: ANY DEVIATION FROM OPTIONS GIVEN WILL REQUIRE PRIOR APPROVAL BY ENGINEER.

ADDITIONAL EROSION CONTROL DEVICES MAY NEED TO BE INSTALLED AS DIRECTED BY THE ENGINEER.

2012 STANDARD DRAWINGS

1604.01	Railroad Erosion Control Detail	1632.01	Rock Inlet Sediment Trap Type A
1605.01	Temporary Silt Fence	1632.02	Rock Inlet Sediment Trap Type B
1606.01	Special Sediment Control Fence	1632.03	Rock Inlet Sediment Trap Type C
1607.01	Gravel Construction Entrance	1633.01	Temporary Rock Silt Check Type A
1622.01	Temporary Berms and Slope Drains	1633.02	Temporary Rock Silt Check Type B
1630.01	Riser Basin	1634.01	Temporary Rock Sediment Dam Type A
1630.02	Silt Basin Type B	1634.02	Temporary Rock Sediment Dam Type B
1630.03	Temporary Silt Ditch	1635.01	Rock Pipe Inlet Sediment Trap Type A
1630.04	Stilling Basin	1635.02	Rock Pipe Inlet Sediment Trap Type B
1630.05	Temporary Diversion	1640.01	Coir Fiber Baffle
1630.06	Special Stilling Basin	1645.01	Temporary Stream Crossing
1631.01	Matting Installation		

David L. Smith, PE
LEVEL III : Designer of Erosion and Sediment Control Plans
Certification Number: 590

ROADSIDE ENVIRONMENTAL UNIT
DEPARTMENT OF TRANSPORTATION
DIVISION OF HIGHWAYS
RALEIGH, N.C.

2012 STANDARD SPECIFICATIONS

SEE SHEET 5 FOR PROFILE

Rivers & Associates, Inc.
THE LOUIS BERGER GROUP, Inc.
1001 Wade Avenue, Suite 400
Raleigh, NC 27605-3322

REVISIONS

8/2/2013 3:12:46 PM
G:\DR Projects\DR11001 - NCDOT Group W\430165\Roadway\Proj\430165_RDY_08_EC_01.dgn
G:\CADD\Plots\DR11001\1000_rdy_EC_t61

PROJECT REFERENCE NO.	SHEET NO.
17BPJ4.R.27	EC-2
R/W SHEET NO.	

WATTLE WITH POLYACRYLAMIDE (PAM) DETAIL

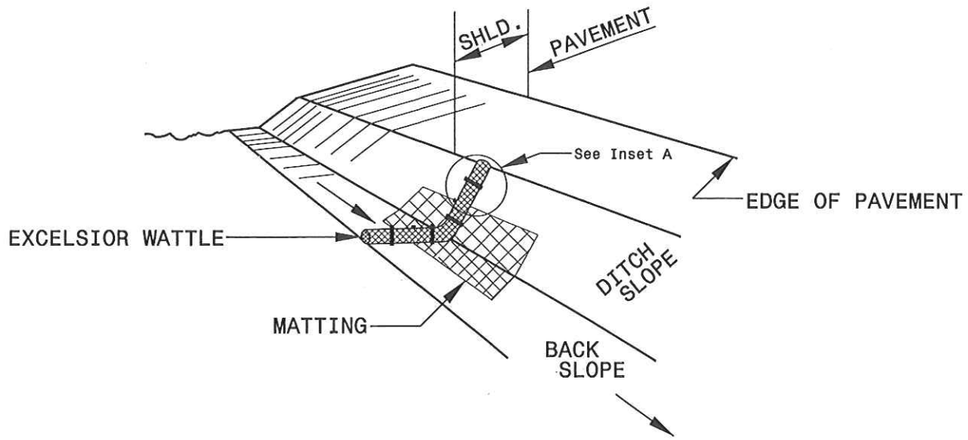

ISOMETRIC VIEW

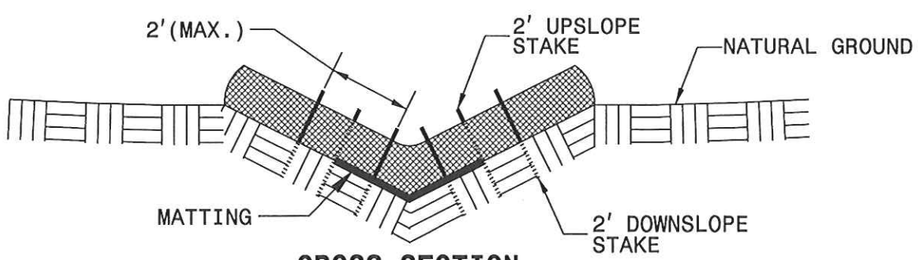

CROSS SECTION VEE DITCH

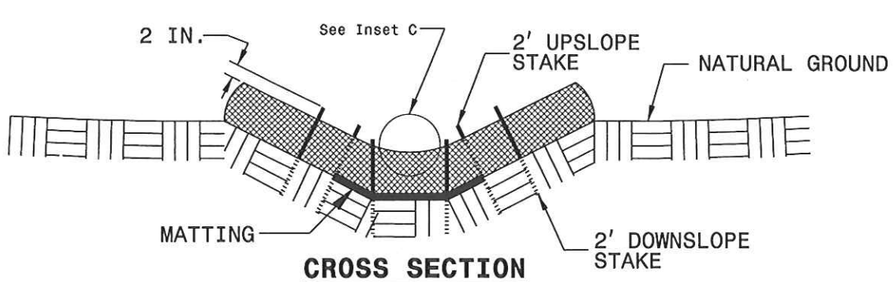

CROSS SECTION TRAPEZOIDAL DITCH

NOTES:

USE MINIMUM 12 IN. DIAMETER EXCELSIOR WATTLE.

USE 2 FT. WOODEN STAKES WITH A 2 IN. BY 2 IN. NOMINAL CROSS SECTION.

ONLY INSTALL WATTLE(S) TO A HEIGHT IN DITCH SO FLOW WILL NOT WASH AROUND WATTLE AND SCOUR DITCH SLOPES AND AS DIRECTED.

INSTALL A MINIMUM OF 2 UPSLOPE STAKES AND 4 DOWNSLOPE STAKES AT AN ANGLE TO WEDGE WATTLE TO BOTTOM OF DITCH.

PROVIDE STAPLES MADE OF 0.125 IN. DIAMETER STEEL WIRE FORMED INTO A U SHAPE NOT LESS THAN 12" IN LENGTH.

INSTALL STAPLES APPROXIMATELY EVERY 1 LINEAR FOOT ON BOTH SIDES OF WATTLE AND AT EACH END TO SECURE IT TO THE SOIL.

INSTALL MATTING IN ACCORDANCE WITH SECTION 1631 OF THE STANDARD SPECIFICATIONS.

PRIOR TO POLYACRYLAMIDE (PAM) APPLICATION, OBTAIN A SOIL SAMPLE FROM PROJECT LOCATION, AND FROM OFFSITE MATERIAL, AND ANALYZE FOR APPROPRIATE PAM FLOCCULANT TO BE APPLIED TO EACH WATTLE.

INITIALLY APPLY 2 OUNCES OF ANIONIC OR NEUTRALLY CHARGED PAM OVER WATTLE WHERE WATER WILL FLOW AND 1 OUNCE OF PAM ON MATTING ON EACH SIDE OF WATTLE. REAPPLY PAM AFTER EVERY RAINFALL EVENT THAT IS EQUAL TO OR EXCEEDS 0.50 IN.

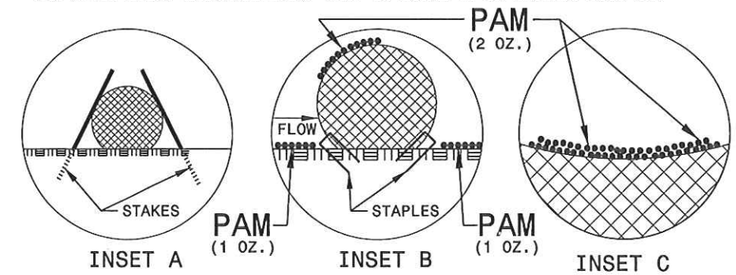

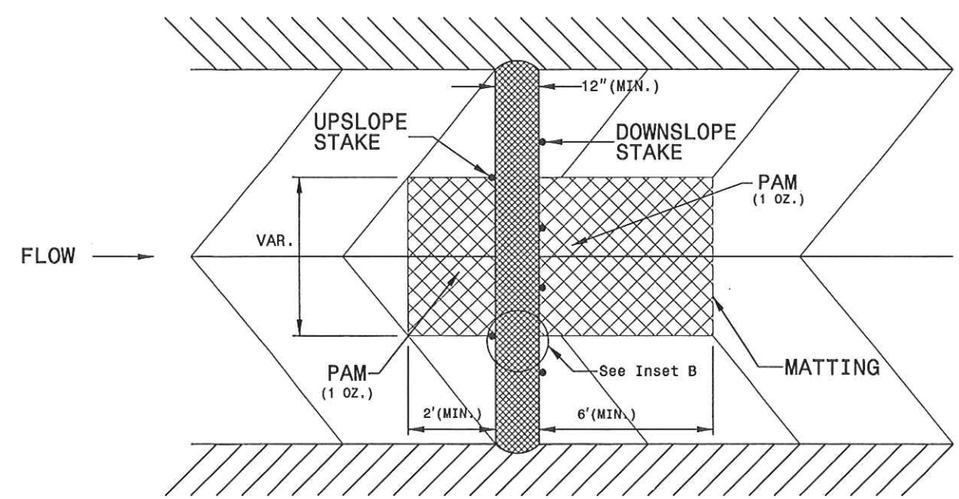

TOP VIEW

Rivers & Associates, P.C.
THE LOUIS BERGER GROUP, Inc.
1001 Wade Avenue, Suite 400
Raleigh, NC 27605-3322

ROADWAY PLANS

REVISIONS

8/2/2013 3:12:48 PM
G:\DR Projects\DR1100 - NCDOT Group WX\130165\Roadway\Proj\130165_RDY_08_EC_02.dgn
G:\CADD\Plot\DR1100\1100_rdy_EC.tbl

PROJECT REFERENCE NO.	SHEET NO.
17BPJ4.R.27	EC-03/CONST.04
R/W SHEET NO.	

CULVERT CONSTRUCTION SEQUENCE STA. 13 + 22 –L–

PHASE I

1. IN CONJUNCTION WITH ROADWAY CONSTRUCTION AND TRAFFIC CONTROL PHASING, THE UPSTREAM EASTERN SECTION OF CULVERT WILL BE INSTALLED AS FOLLOWS:
   a) INSTALL IMPERVIOUS DIKE UPSTREAM OF PROPOSED EASTERN BARREL LOCATION TO DIVERT FLOW AROUND AND BEYOND WORK AREA FOR INSTALLATION OF THAT BARREL
   b) DEWATER WORK AREA AND UTILIZE SPECIAL STILLING BASIN ON WEST BANK FOR EROSION CONTROL PRIOR TO RETURNING WATER TO THE STREAM
   c) CONSTRUCT NORTHERN PORTION OF EASTERN BARREL, WINGWALL, & BANK WORK THEN REMOVE DIKES ONCE AREA IS STABILIZED AND CONCRETE HAS CURED
2. IN CONJUNCTION WITH ROADWAY CONSTRUCTION AND TRAFFIC CONTROL PHASING, THE UPSTREAM WESTERN SECTION OF CULVERT WILL BE INSTALLED AS FOLLOWS:
   a) INSTALL IMPERVIOUS DIKE UPSTREAM OF PROPOSED WESTERN BARREL LOCATION TO DIVERT FLOW THROUGH THE NEWLY CONSTRUCTED EASTERN BARREL
   b) DEWATER WORK AREA AND UTILIZE SPECIAL STILLING BASIN ON WEST BANK FOR EROSION CONTROL PRIOR TO RETURNING WATER TO THE STREAM
   c) CONSTRUCT NORTHERN PORTION OF WESTERN BARREL, WINGWALL, & BANK WORK THEN REMOVE DIKES ONCE AREA IS STABILIZED AND CONCRETE HAS CURED

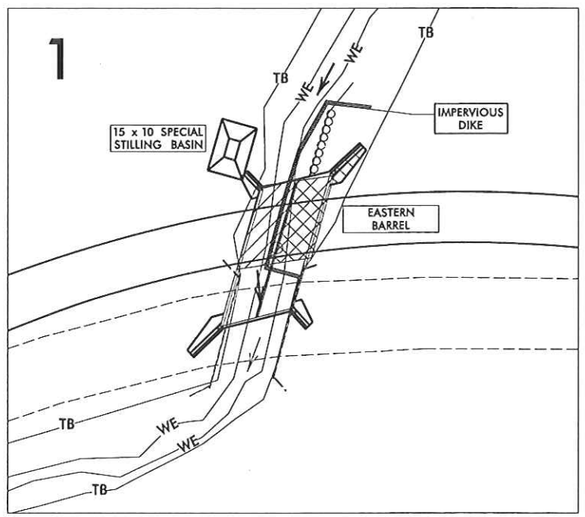

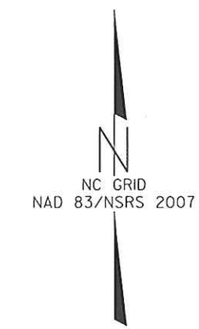

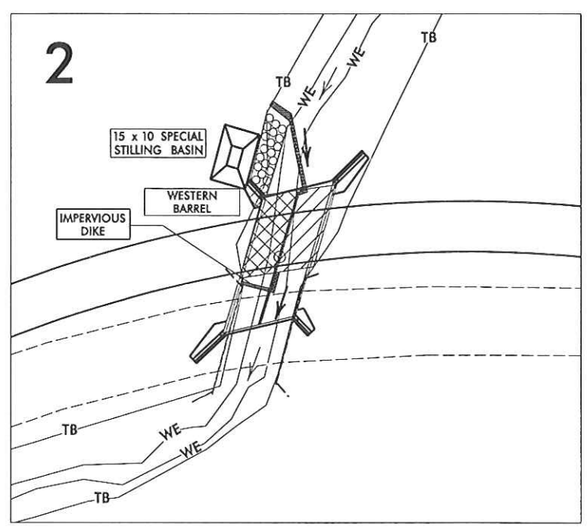

PHASE II

1. IN CONJUNCTION WITH ROADWAY CONSTRUCTION AND TRAFFIC CONTROL PHASING, THE DOWNSTREAM EASTERN SECTION OF CULVERT WILL BE INSTALLED AS FOLLOWS:
   a) INSTALL IMPERVIOUS DIKE AT THE INLET OF THE EASTERN BARREL CONSTRUCTED IN PHASE I & DIKE DOWNSTREAM AREA AS NEEDED TO DIVERT FLOW AROUND WORK AREA
   b) DEWATER WORK AREA AND UTILIZE SPECIAL STILLING BASIN ON WEST BANK FOR EROSION CONTROL PRIOR TO RETURNING WATER TO THE STREAM
   c) CONSTRUCT SOUTHERN PORTION OF EASTERN BARREL, WINGWALL, & BANK WORK THEN REMOVE DIKES ONCE AREA IS STABILIZED AND CONCRETE HAS CURED
2. IN CONJUNCTION WITH ROADWAY CONSTRUCTION AND TRAFFIC CONTROL PHASING, THE DOWNSTREAM WESTERN SECTION OF CULVERT WILL BE INSTALLED AS FOLLOWS:
   a) INSTALL IMPERVIOUS DIKE AT INLET OF WESTERN BARREL CONSTRUCTED IN PHASE I TO DIVERT FLOW THROUGH THE NEWLY CONSTRUCTED EASTERN BARREL
   b) DEWATER WORK AREA AND UTILIZE SPECIAL STILLING BASIN ON WEST BANK FOR EROSION CONTROL PRIOR TO RETURNING WATER TO THE STREAM
   c) CONSTRUCT SOUTHERN PORTION OF WESTERN BARREL, WINGWALL & BANK WORK THEN REMOVE DIKES ONCE AREA IS STABILIZED AND CONCRETE HAS CURED

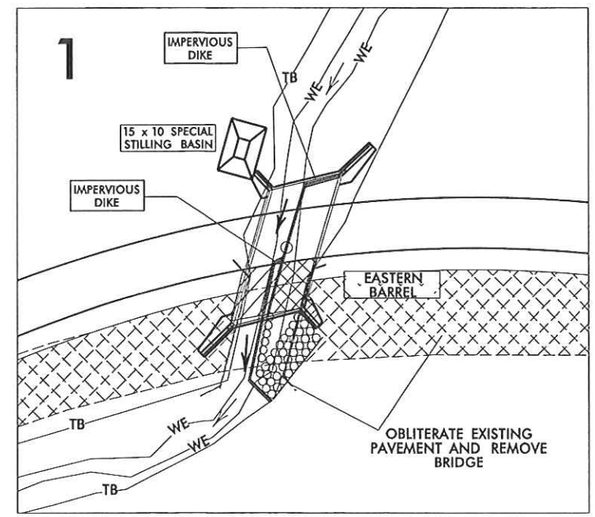

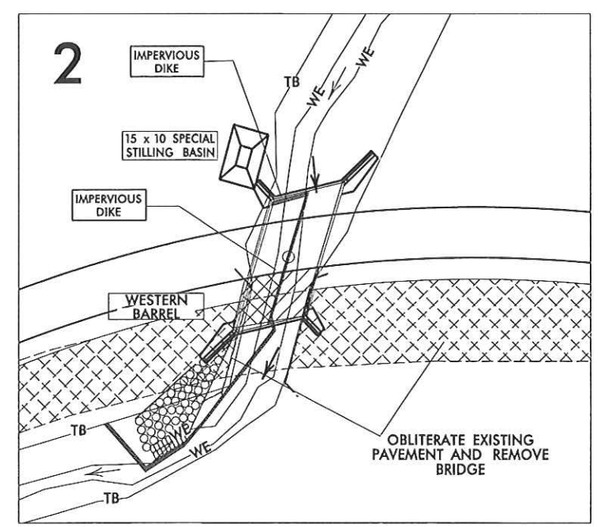

REVISIONS

8/2/2013 3:12:50 PM
G:\DR Projects\DR1100 - NCDOT Group W\430165\Roadway\Proj\430165_RDY_08_EC_03.dgn
G:\CADD\Plot\DR1100\1100_rdy_EC.tbl

Rivers & Associates
THE LOUIS BERGER GROUP, Inc.
1001 Wade Avenue, Suite 400
Raleigh, NC 27605-3322

ROADWAY PLANS

STATE OF NORTH CAROLINA
DIVISION OF HIGHWAYS

SOIL STABILIZATION TIMEFRAMES

SITE DESCRIPTION	STABILIZATION TIME	TIMEFRAME EXCEPTIONS
PERIMETER DIKES, SWALES, DITCHES AND SLOPES	7 DAYS	NONE
HIGH QUALITY WATER (HOW) ZONES	7 DAYS	NONE
SLOPES STEEPER THAN 3:1	7 DAYS	IF SLOPES ARE 10' OR LESS IN LENGTH AND ARE NOT STEEPER THAN 2:1, 14 DAYS ARE ALLOWED.
SLOPES 3:1 OR FLATTER	14 DAYS	7 DAYS FOR SLOPES GREATER THAN 50' IN LENGTH.
ALL OTHER AREAS WITH SLOPES FLATTER THAN 4:1	14 DAYS	NONE, EXCEPT FOR PERIMETERS AND HOW ZONES.

REVISIONS

8/2/2013 3:12:51 PM
G:\DR Projects\DR1100 - NCDOT Group W\430165\Roadway\Proj\430165_RDY_08_EC_04.dgn
G:\CADD\Plots\DR1100\1100_rdy.tbl

PROJECT: 17BP.14.R.27

STATE OF NORTH CAROLINA
DIVISION OF HIGHWAYS

T.I.P. NO.	SHEET NO.
17BP.14.R.27	UO-1

UTILITIES BY OTHERS PLANS
HAYWOOD COUNTY

LOCATION: BRIDGE NO. 165 ON SR 1513 OVER CHAMBERS BRANCH

TYPE OF WORK: AERIAL UTILITIES AND UTILITY CONSTRUCTION

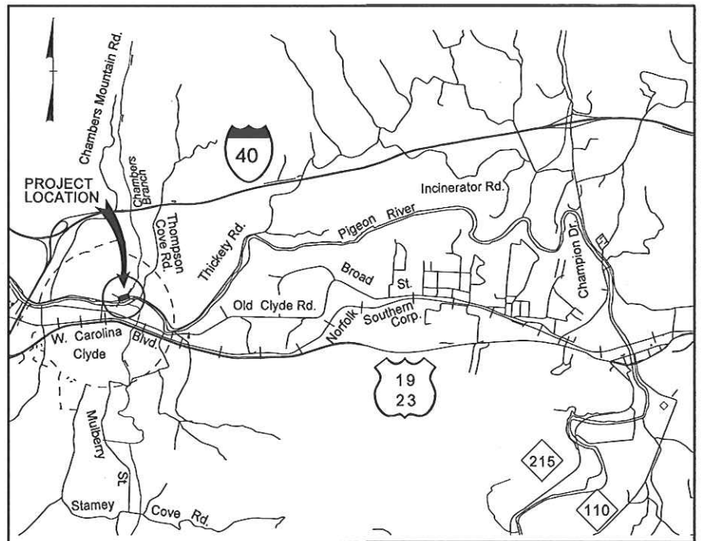

VICINITY MAP ***NTS***

All materials, equipment, labor, and workmanship shall be in accordance with and subject to the Water and Sewer Authority of Haywood County's standard specifications; and the North Carolina Administrative Code for wastewater collection and water distribution systems. In the event of conflict between Water and Sewer Authority of Haywood County's standard specifications; or the North Carolina Administrative Code, the more restrictive requirements shall apply.

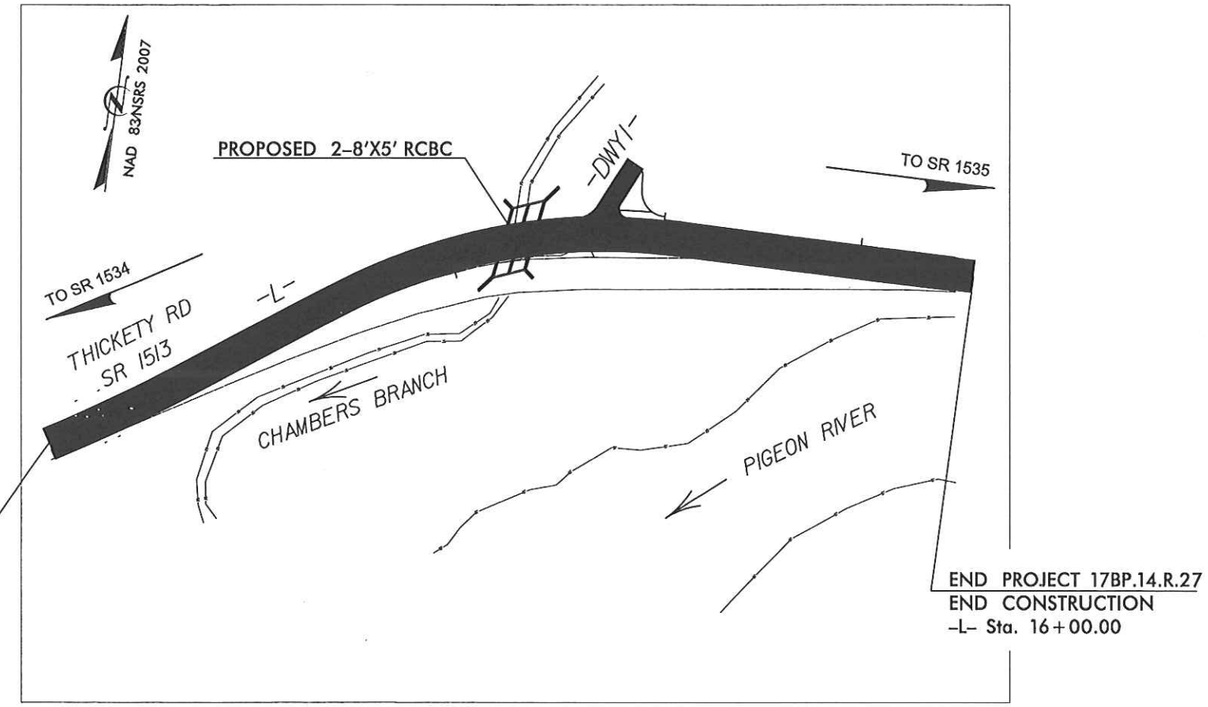

GRAPHIC SCALES

20 10 0 20 40
PLANS

20 10 0 20 40
PROFILE (HORIZONTAL)

2 1 0 2 4
PROFILE (VERTICAL)

INDEX OF SHEETS

SHEET NO.	DESCRIPTION
UO-1	TITLE SHEET
UO-2	UTILITIES BY OTHERS PLAN SHEET
UO-3	UTILITIES BY OTHERS PLAN SHEET
UO-4	SYMBOLOGY SHEET
UO-5	UTILITY PLAN AND PROFILE SHEET - SEWER
UO-6	UTILITY PLAN AND PROFILE SHEET - WATER
UO-7	UTILITY DETAILS AND CONSTRUCTION NOTES

UTILITY OWNERS ON PROJECT

(1) POWER: PROGRESS ENERGY - Cynthia Roarty (919) 481-6119

(2) TELEPHONE: AT&T - Scott Addington (828) 258-7138

(3) CABLE: CHARTER COMMUNICATIONS - John Grindstaff (828) 231-8724

(4) WATER: TOWN OF CLYDE - Erick Ohliger (828) 627-2566

(5) SEWER: TOWN OF CLYDE - Erick Ohliger (828) 627-2566

PLANS PREPARED BY:

CH ENGINEERING
3220 GLEN ROYAL RD. RALEIGH, NC 27617
TELE 919.788.0224 FAX 919.788.0232
NC LICENSE #P-0189

UTILITIES PROJECT ENGINEER

Eric Tweed, P.E.

PREPARED FOR THE OFFICE OF:

DIVISION OF HIGHWAYS
UTILITIES UNIT
UTILITIES ENGINEERING

1555 MAIL SERVICE CENTER
RALEIGH NC 27699-1555
PHONE (919) 707-6690
FAX (919) 250-4151

Roger Worthington, P.E. UTILITIES SECTION ENGINEER

4/25/2013
$FILEL$
$PENTRI_C$

CONTACT INFORMATION FOR UTILITIES

POWER: PROGRESS ENERGY; CYNTHIA ROARTY 919-481-6119 CYNTHIA.ROARTY@PGNMAIL.COM
PHONE: AT&T; SCOTT ADDINGTON 1-828-258-7138 JA2089@ATT.COM
CABLE: CHARTER COMM; JOHN GRINDSTAFF 1-828-258-7138 JOHN.GRINDSTAFF@CHARTERCOM.COM
SEWER&WATER: CLYDE TOWN HALL; ERICK OHLIGER 828-627-2566 JOY.GARLAND@TOWNOFCLYDE.COM

CH ENGINEERING
3220 GLEN ROYAL RD. RALEIGH, NC 27617
TELE 919.788.0224 FAX 919.788.0232
NC LICENSE #P-0189

PROJECT REFERENCE NO.	SHEET NO.
17BP.14.R.27	UO-2

UTILITIES BY OTHERS

NOTE:
ALL PROPOSED UTILITY WORK SHOWN ON THIS SHEET WILL BE DONE BY OTHERS

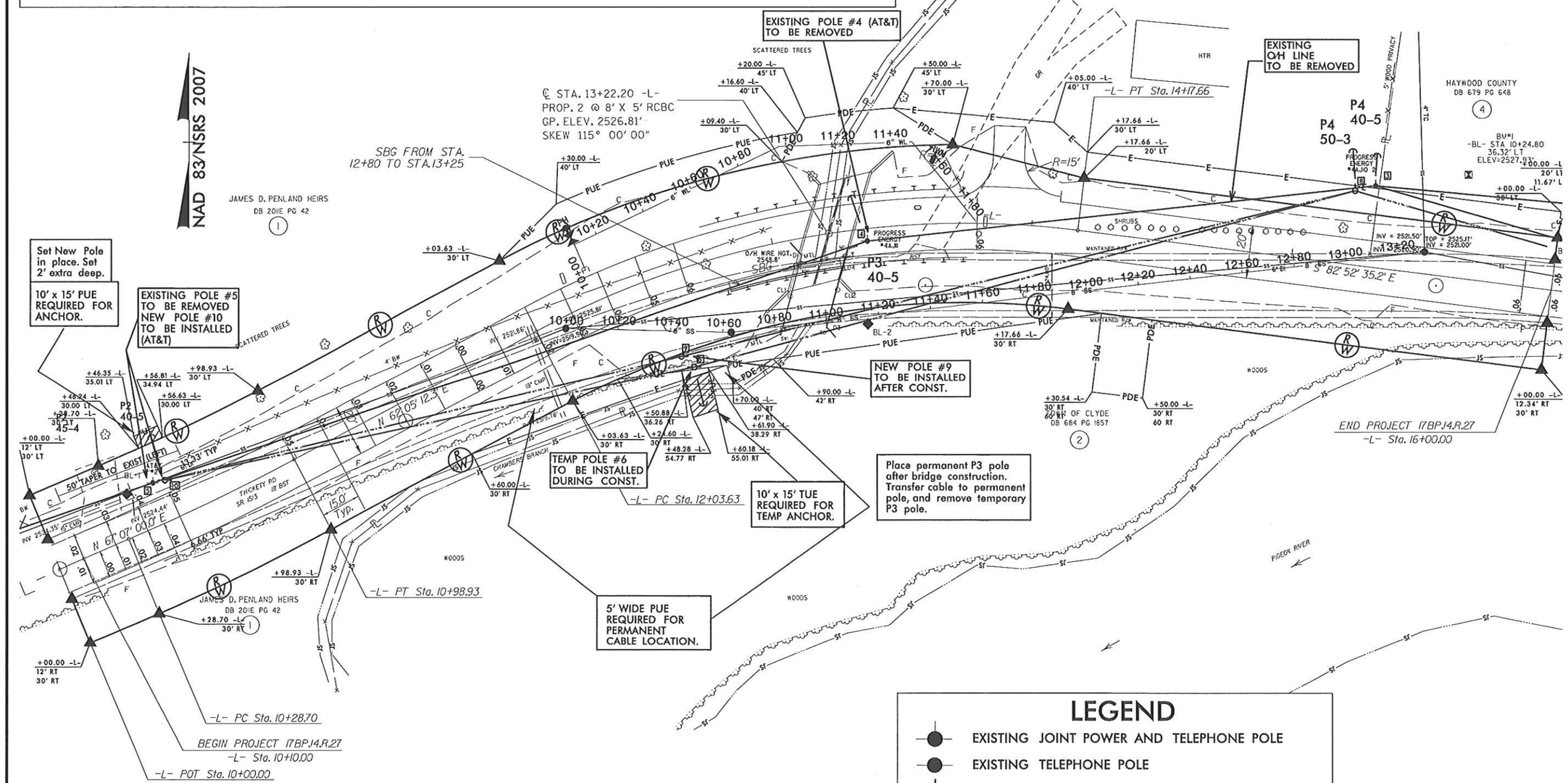

LEGEND

- EXISTING JOINT POWER AND TELEPHONE POLE
- EXISTING TELEPHONE POLE
- PROPOSED JOINT POWER AND TELEPHONE POLE
- PROPOSED TELEPHONE POLE
- PROPOSED POWER POLE
- PROPOSED O/H POWER & TELEPHONE LINES
- TEMPORARY O/H TELEPHONE LINES
- EXISTING O/H POWER & TELEPHONE LINES
- PROPOSED UG TELEPHONE LINES

THE LOUIS BERGER GROUP, Inc.
1001 Wade Avenue, Suite 400
Raleigh, NC 27605-3322

UBO PLANS

CONTACT INFORMATION FOR UTILITIES

POWER: PROGRESS ENERGY; CYNTHIA ROARTY 919-481-6119 CYNTHIA.ROARTY@PGNMAIL.COM
PHONE: AT&T; SCOTT ADDINGTON 1-828-258-7138 JA2089@ATT.COM
CABLE: CHARTER COMM; JOHN GRINDSTAFF 1-828-258-7138 JOHN.GRINDSTAFF@CHARTERCOM.COM
SEWER&WATER: CLYDE TOWN HALL; ERICK OHLIGER 828-627-2566 JOY.GARLAND@TOWNOFCLYDE.COM

CH ENGINEERING
3220 GLEN ROYAL RD. RALEIGH, NC 27617
TELE 919.788.0224 FAX 919.788.0232
NC LICENSE #P-0189

PROJECT REFERENCE NO.	SHEET NO.
17BP.14.R.27	UO-3

UTILITIES BY OTHERS

NOTE:
ALL PROPOSED UTILITY WORK SHOWN ON THIS SHEET WILL BE DONE BY OTHERS

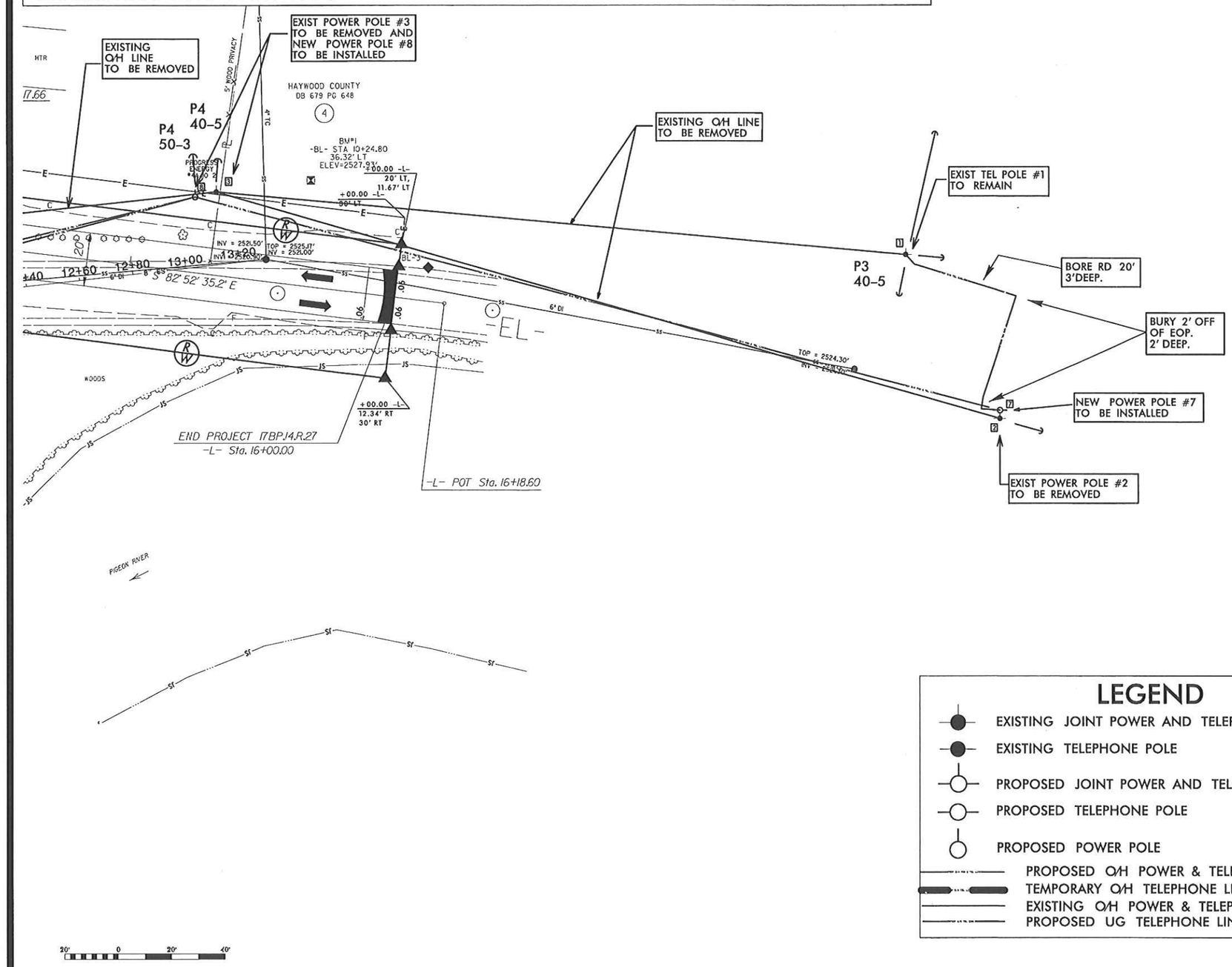

LEGEND

- EXISTING JOINT POWER AND TELEPHONE POLE
- EXISTING TELEPHONE POLE
- PROPOSED JOINT POWER AND TELEPHONE POLE
- PROPOSED TELEPHONE POLE
- PROPOSED POWER POLE
- PROPOSED O/H POWER & TELEPHONE LINES
- TEMPORARY O/H TELEPHONE LINES
- EXISTING O/H POWER & TELEPHONE LINES
- PROPOSED UG TELEPHONE LINES

THE LOUIS BERGER GROUP, Inc.
1001 Wade Avenue, Suite 400
Raleigh, NC 27605-3322

UBO PLANS

5/14/99

STATE OF NORTH CAROLINA
DIVISION OF HIGHWAYS

UTILITIES PLAN SHEET SYMBOLS

CH ENGINEERING
3220 GLEN ROYAL RD. RALEIGH, NC 27617
TELE 919.788.0224 FAX 919.788.0232
NC LICENSE #P-0189

PROJECT REFERENCE NO.	SHEET NO.
17BP.14.R.27	UO-4
BRIDGE NO. 165	

ROADWAY DESIGN ENGINEER

UTILITY ENGINEER

NORTH CAROLINA PROFESSIONAL SEAL 12012 ENGINEER
2-21-13

PROPOSED WATER SYMBOLS

- Water Line (Sized as Shown)
- 11¼ Degree Bend
- 22½ Degree Bend
- 45 Degree Bend
- 90 Degree Bend
- Plug
- Tee
- Cross
- Reducer
- Gate Valve (GV)
- Butterfly Valve (BV)
- Tapping Valve (TGV)
- Line Stop (LS)
- Line Stop with Bypass (LS/BP)
- Blow Off (BO)
- Fire Hydrant (FEH)
- Relocate Fire Hydrant (REH)
- Remove Fire Hydrant (REM FH)
- Water Meter (PWM)
- Relocate Water Meter (RWM)
- Remove Water Meter (REM WM)
- Water Pump Station (PS(W))
- RPZ Backflow Preventer (RBPZ)
- DCV Backflow Preventer (RBFP)
- Relocate RPZ Backflow Preventer (RBPZ)
- Relocate DCV Backflow Preventer (RBFP)

PROPOSED SEWER SYMBOLS

- Gravity Sewer Line (Sized as Shown)
- Force Main Sewer Line (Sized as Shown)
- Manhole (Sized per Note)
- Sewer Pump Station (PS(SS))

PROPOSED MISCELLANOUS UTILITIES SYMBOLS

- Power Pole
- Telephone Pole
- Joint Use Pole
- Telephone Pedestal (TEL PED)
- Utility Line by Others (Type as Shown)
- Trenchless Installation
- Encasement by Open Cut
- Encasement
- Thrust Block
- Air Release Valve (AR)
- Utility Vault (UV)
- Concrete Pier (CP)
- Steel Pier (SP)
- Plan Note — NOTE
- Pay Item Note — PAY ITEM

EXISTING UTILITIES SYMBOLS

- Power Pole
- Telephone Pole
- Joint Use Pole
- Utility Pole
- Utility Pole with Base
- H-Frame Pole
- Power Transmission Line Tower
- Water Manhole
- Power Manhole
- Telephone Manhole
- Sanitary Sewer Manhole
- Hand Hole for Cable
- Power Transformer
- Telephone Pedestal
- CATV Pedestal
- Gas Valve
- Gas Meter
- Located Miscellaneous Utility Object
- Abandoned According to Utility Records — AATUR
- End of Information — E.O.I.
- *Underground Power Line
- *Underground Telephone Cable
- *Underground Telephone Conduit
- *Underground Fiber Optics Telephone Cable
- *Underground TV Cable
- *Underground Fiber Optics TV Cable
- *Underground Gas Pipeline
- Aboveground Gas Pipeline — A/G Gas
- *Underground Water Line
- Aboveground Water Line — A/G Water
- *Underground Gravity Sanitary Sewer Line
- Aboveground Gravity Sanitary Sewer Line — A/G Sanitary Sewer
- *Underground SS Forced Main Line
- Underground Unknown Utility Line
- SUE Test Hole
- Water Meter
- Water Valve
- Fire Hydrant
- Sanitary Sewer Cleanout

*For Existing Utilities
- Utility Line Drawn from Record (Type as Shown)
- Designated Utility Line (Type as Shown)

2/21/2013
A-30165_SYM_UC-2.dgn
ETWEST

REV: 2/1/2012

THE LOUIS BERGER GROUP, Inc.
1001 Wade Avenue, Suite 400
Raleigh, North Carolina 27605

CH ENGINEERING
3220 GLEN ROYAL RD. RALEIGH, NC 27617
TELE 919.788.0224 FAX 919.788.0232
NC LICENSE #P-0189

PROJECT REFERENCE NO.	SHEET NO.
17BP.14.R.27	UO-5
BRIDGE NO.	165

UTILITY ENGINEER
NORTH CAROLINA PROFESSIONAL SEAL 028912 ENGINEER ERIC M. TWEED 7-25-13

5/28/99

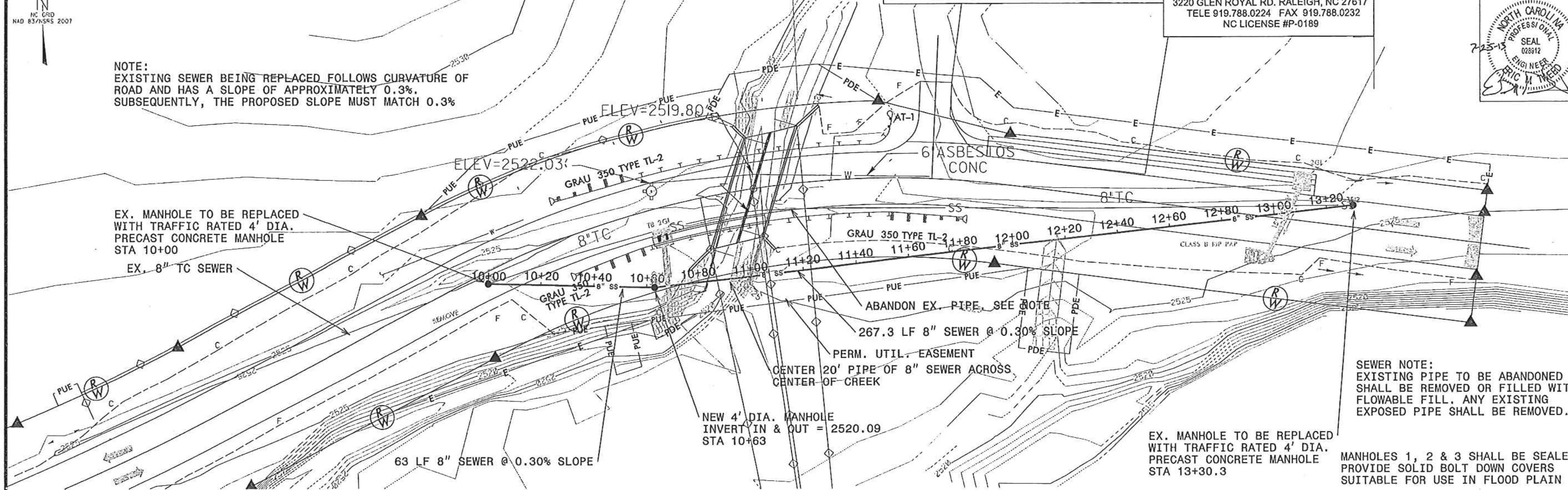

NOTE:
EXISTING SEWER BEING REPLACED FOLLOWS CURVATURE OF ROAD AND HAS A SLOPE OF APPROXIMATELY 0.3%. SUBSEQUENTLY, THE PROPOSED SLOPE MUST MATCH 0.3%

SEWER NOTE:
EXISTING PIPE TO BE ABANDONED SHALL BE REMOVED OR FILLED WITH FLOWABLE FILL. ANY EXISTING EXPOSED PIPE SHALL BE REMOVED.

MANHOLES 1, 2 & 3 SHALL BE SEALED. PROVIDE SOLID BOLT DOWN COVERS SUITABLE FOR USE IN FLOOD PLAIN

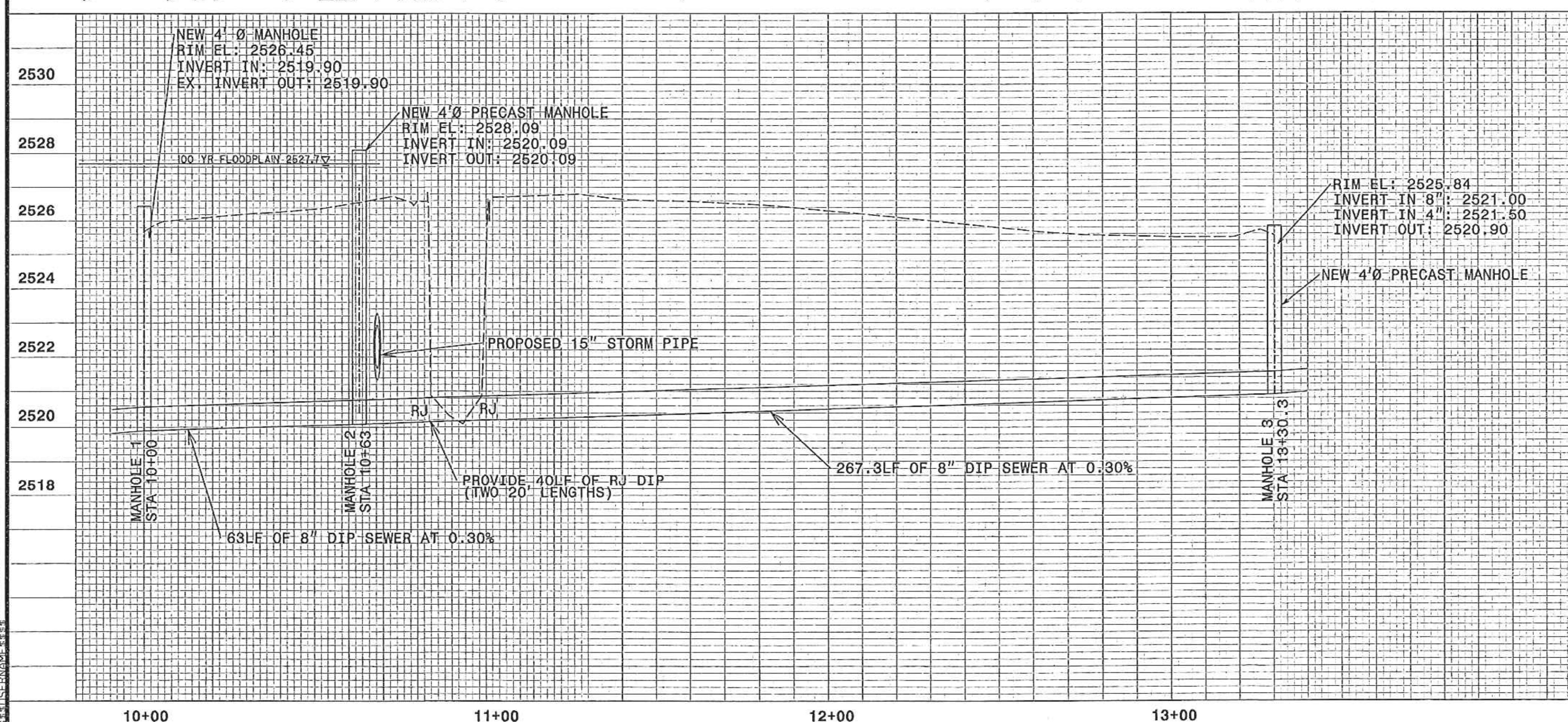

GRAPHIC SCALES
20 10 0 20 40 PLANS
20 10 0 20 40 PROFILE (HORIZONTAL)
2 1 0 2 4 PROFILE (VERTICAL)

CONTRACTOR SHALL PLUG 4" TC SS & 8" SS UPSTREAM OF EXISTING MANHOLE STATION 13+30.3

CONTRACTOR SHALL MINIMIZE SERVICE INTERRUPTIONS DURING INSTALLATION OF UTILITIES.

CONTRACTOR SHALL REPLACE ANY DAMAGED SS PIPE RESULTING FROM TIE-INS TO NEW MANHOLES AS NEEDED

ALL STREAM CROSSINGS COVERED UNDER 401-404 PERMIT FOR THE BRIDGE RELOCATION.

$$$$$$$SYSTIME$$$$$ $$$$$$$$$$$$$DGN$$$$$$$$$$$$$$$$$$$$ $$$$USERNAME$$$$

5/28/99

NOTE:
COORDINATE WITH UTILITY OWNER FOR MAKING TIES TO EXISTING LINE.

THRUST COLLARS SHALL BE ON THE SAME JOINT OF PIPE AS THE NEW RJ BEND OR THE BEND SHALL BE RODDED TO THE CONCRETE COLLAR.

ALL STREAM CROSSINGS 401-404 PERMITS ARE COVERED UNDER BRIDGE RELOCATION.

PIPE QUANTITY: 188 LF OF 6" RJ DIP

THE LOUIS BERGER GROUP, Inc.
1001 Wade Avenue, Suite 400
Raleigh, North Carolina 27605

CH ENGINEERING
3220 GLEN ROYAL RD. RALEIGH, NC 27617
TELE 919.788.0224 FAX 919.788.0232
NC LICENSE #P-0189

PROJECT REFERENCE NO.	SHEET NO.
17BP.14.R.27	UO-6
BRIDGE NO. 165	

UTILITY ENGINEER
NORTH CAROLINA PROFESSIONAL SEAL 028912 ENGINEER
7-25-13
ERIC M. PIXLED

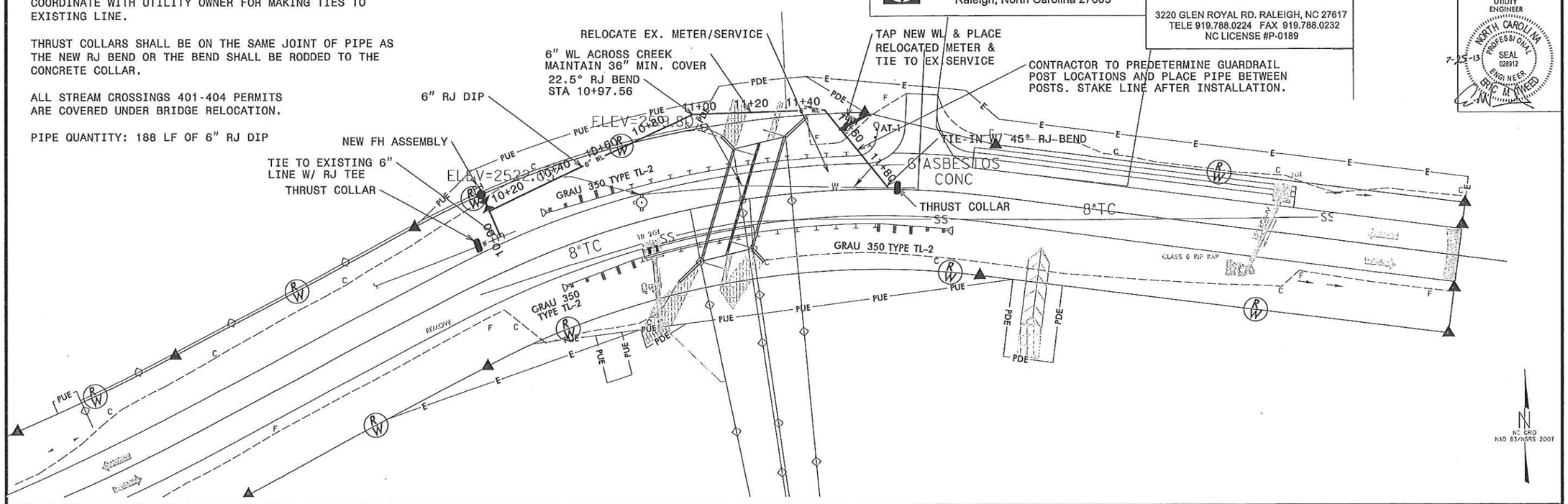

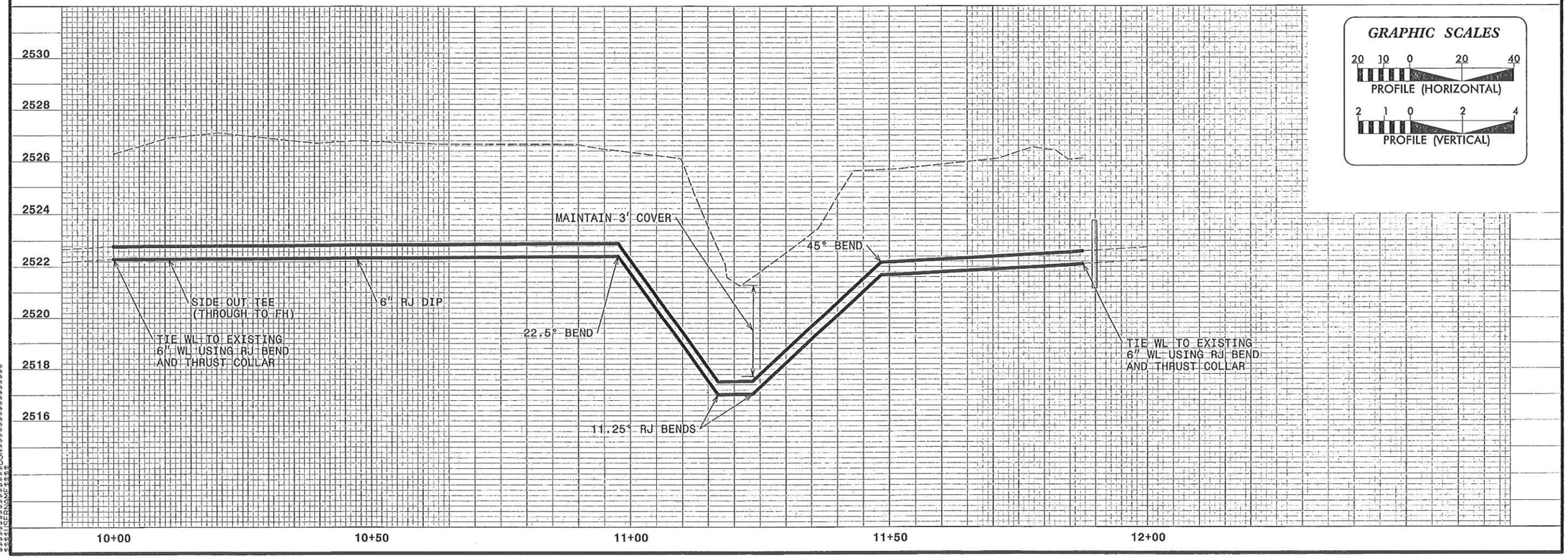

$$SYSTIME$$
$$DGN$$
$$USERNAME$$

CH ENGINEERING
3220 GLEN ROYAL RD. RALEIGH, NC 27617
TELE 919.788.0224 FAX 919.788.0232
NC LICENSE #P-0189

0' 20' 40'

PROJECT REFERENCE NO.	SHEET NO.
17BP.14.R.27	UO-7
BRIDGE NO. 165	
ROADWAY DESIGN ENGINEER	UTILITY ENGINEER

N.C. PROFESSIONAL ENGINEER SEAL 028812 — 2-21-13

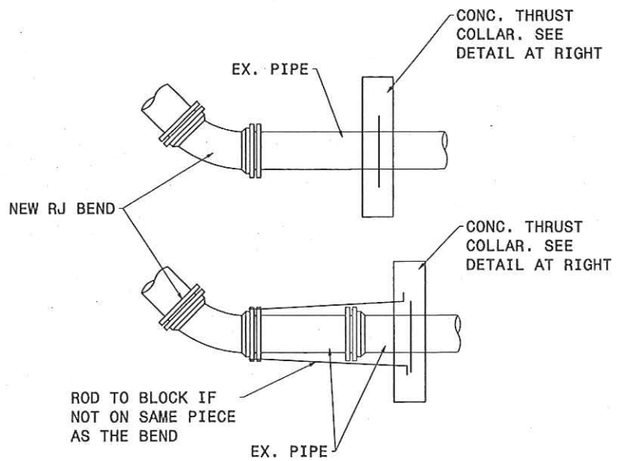

RODS SHALL BE SAME Ø AS BOLTS SUPPLIED WITH THE BEND.

PIPE CONNECTION DETAIL

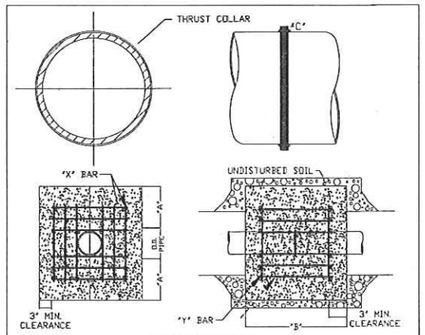

REINFORCING REQUIREMENTS

11.25 PIPE	REBAR SIZE	'X' BAR LENGTH	'X' BAR WEIGHT	'Y' BAR LENGTH	'Y' BAR WEIGHT	NO. REQUIRED
6" - 36"	#5	2'-2"= 2.5 PIPE	5.93 LBS/FT	1'-6"	1.5 LBS EACH	4-24, 1-12
42" & greater	#6	2'-9"= 2.5 PIPE	1.302 LBS/FT	1'-9"	2.3 LBS EACH	4-24, 1-12

THRUST COLLAR AND THRUST SCHEDULE

11.25 PIPE	'A'	'B'	'C' 6"-18", 22"-24", 30"-36", 42"
6" - 36"	1'-6"	1'-7"	8" 9" 4"
42" & greater	1'-8"	1'-9"	4"

NOTES:

1. CONCRETE SHALL BE 3000 PSI AND TRANSIT MIXED
2. REINFORCING BARS SHALL BE TIED TOGETHER
3. TRENCH BOTTOM WIDTH IN VICINITY OF THRUST BLOCK INSTALLATION SHALL BE THE MINIMUM WIDTH
4. THRUST COLLAR MAY BE RJ COLLAR

THRUST BLOCKING DESIGN DATA FOR WATER MAINS

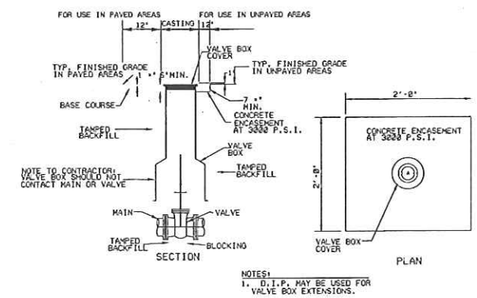

NOTES:
1. D.I.P. MAY BE USED FOR VALVE BOX EXTENSIONS.

VALVE AND VALVE BOX INSTALLATION

NOT TO SCALE

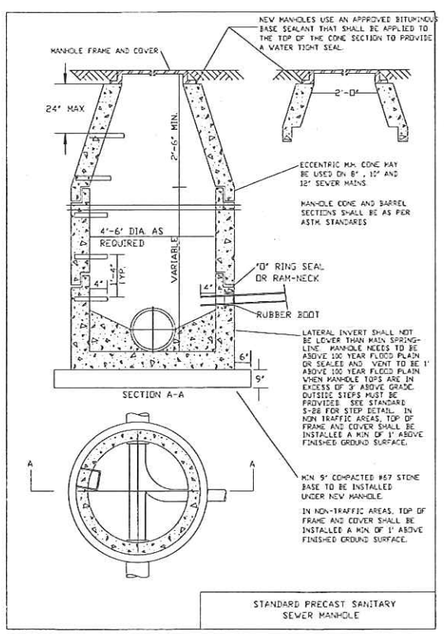

STANDARD PRECAST SANITARY SEWER MANHOLE

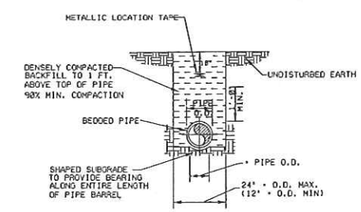

WATER MAINS 8" AND SMALLER SHALL HAVE A MINIMUM OF 3' OF COVER.

PIPE LAYING CONDITION

NOT TO SCALE

REVISIONS

2/21/2013 $SYSTIME$ $PLTDRVL$
$FILEL$
$PENTBLL$

THE LOUIS BERGER GROUP, Inc.
1001 Wade Avenue, Suite 400
Raleigh, NC 27605-3322

UTILITY PLANS

17BP.14.R.27
CROSS SECTIONS

INDEX OF SHEETS

TITLE	STATION	SHEET NO.
CROSS-SECTION INDEX		X-1
CROSS-SECTION SUMMARY		X-1A
-L- CROSS-SECTIONS	10+00 - 16+10	X-2 THROUGH X-12

NOTE: Approximate quantities only. Clearing and Grubbing, Unclassified Excavation, Fine Grading, and Removal of Existing Asphalt Pavement will be paid for at the contract lump sum price for "Grading".

8/23/99

8/2/2013
3:12:52 PM
S:\OR Projects\OR1100 - NCDOT Group HX\430165\Roadway\XSC\430165_RDY_XPL_001.dgn

PROJ. REFERENCE NO.	SHEET NO.
17BP.14.R.27	X-1A

STATE OF NORTH CAROLINA
DIVISION OF HIGHWAYS

NOTE: EMBANKMENT COLUMN DOES NOT INCLUDE BACKFILL FOR UNDERCUT

CROSS-SECTION SUMMARY

Station L	Uncl. Exc. (cu. yd.)	Embt (cu. yd.)	Station L	Uncl. Exc. (cu. yd.)	Embt (cu. yd.)
10+10.00	0	0	15+40.00	16	0
10+20.00	9	0	15+50.00	6	0
10+30.00	10	0	15+60.00	3	0
10+40.00	7	1	15+70.00	4	0
10+50.00	3	1	15+80.00	7	0
10+60.00	3	2	15+90.00	8	0
10+70.00	2	2	16+00.00	10	0
10+80.00	2	2			
10+90.00	2	1			
11+00.00	1	2			
11+10.00	1	2			
11+20.00	8	2			
11+30.00	16	2			
11+40.00	16	3			
11+50.00	16	4			
11+60.00	16	5			
11+70.00	8	6			
11+80.00	0	7			
11+90.00	0	8			
12+00.00	0	9			
12+10.00	0	10			
12+20.00	0	9			
12+30.00	3	7			
12+40.00	6	5			
12+50.00	8	4			
12+60.00	11	4			
12+70.00	14	4			
12+80.00	13	3			
12+90.00	11	4			
13+00.00	10	6			
13+10.00	5	20			
13+20.00	0	49			
13+30.00	6	55			
13+40.00	13	31			
13+50.00	13	11			
13+60.00	13	4			
13+70.00	12	5			
13+80.00	11	4			
13+90.00	15	1			
14+00.00	26	0			
14+10.00	36	0			
14+20.00	38	0			
14+30.00	39	0			
14+40.00	39	0			
14+50.00	39	0			
14+60.00	37	0			
14+70.00	33	0			
14+80.00	28	0			
14+90.00	25	0			
15+00.00	23	0			
15+10.00	20	0			
15+20.00	18	0			
15+30.00	21	0			

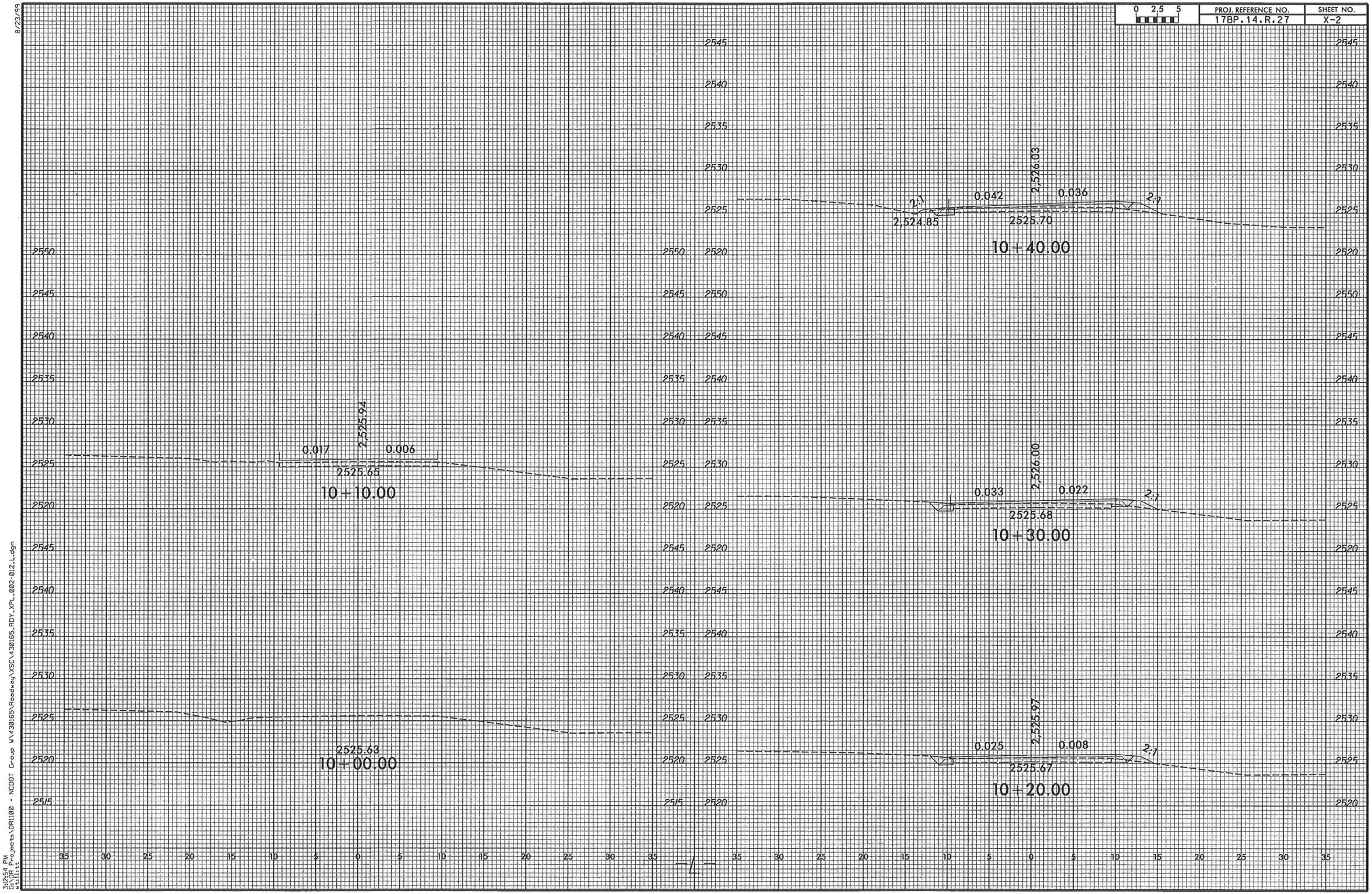

8/23/99
3:12:54 PM
G:\OR Projects\OR1100 - NCDOT Group W\430165\Roadway\XSC\430165_RDY_XPL_002-012_L.dgn
wetlitt

0 2.5 5	PROJ. REFERENCE NO.	SHEET NO.
	17BP.14.R.27	X-3

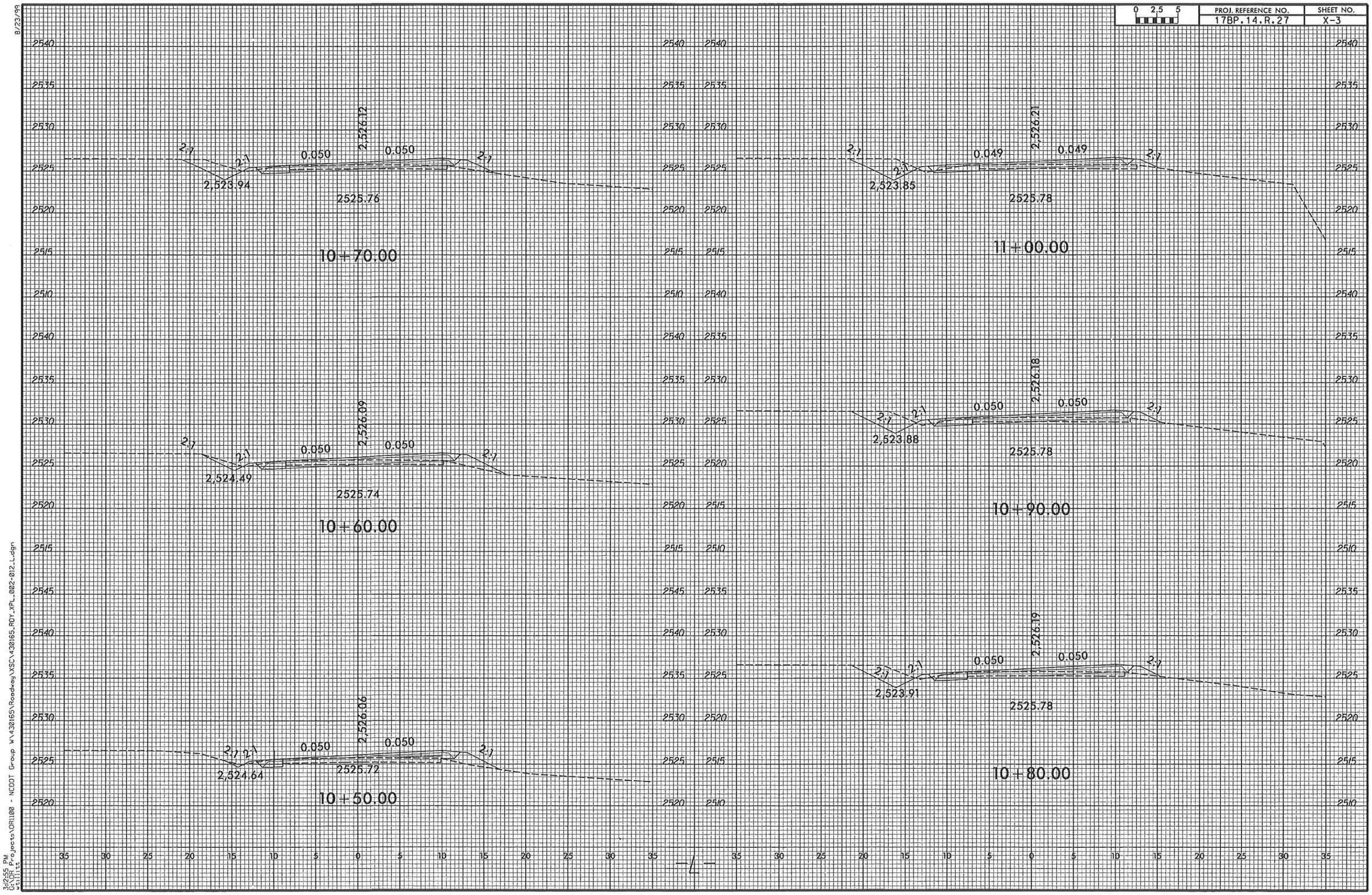

8/23/99

3:12:55 PM
G:\OR Projects\OR1100 - NCDOT Group W\430165\Roadway\XSC\430165_RDY_XPL_002-012_L.dgn

8/23/99

0 2.5 5	PROJ. REFERENCE NO.	SHEET NO.
	17BP.14.R.27	X-4

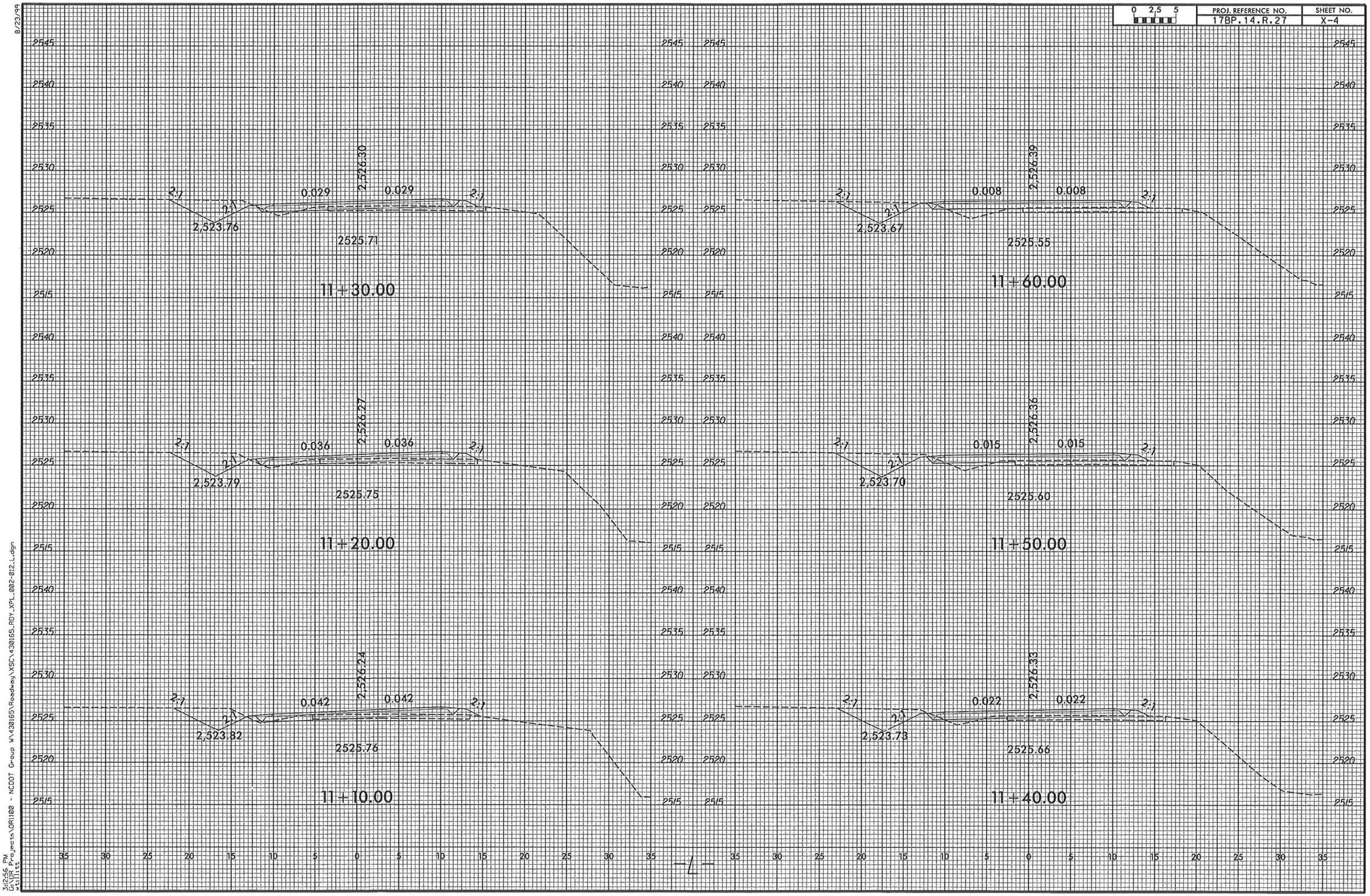

3:12:56 PM
G:\DGN Projects\DR1100 - NCDOT Group WX430165\Roadway\XSC\430165_RDY_XPL_002-012-L.dgn
wesliles

8/23/99

0 2.5 5	PROJ. REFERENCE NO.	SHEET NO.
	17BP.14.R.27	X-5

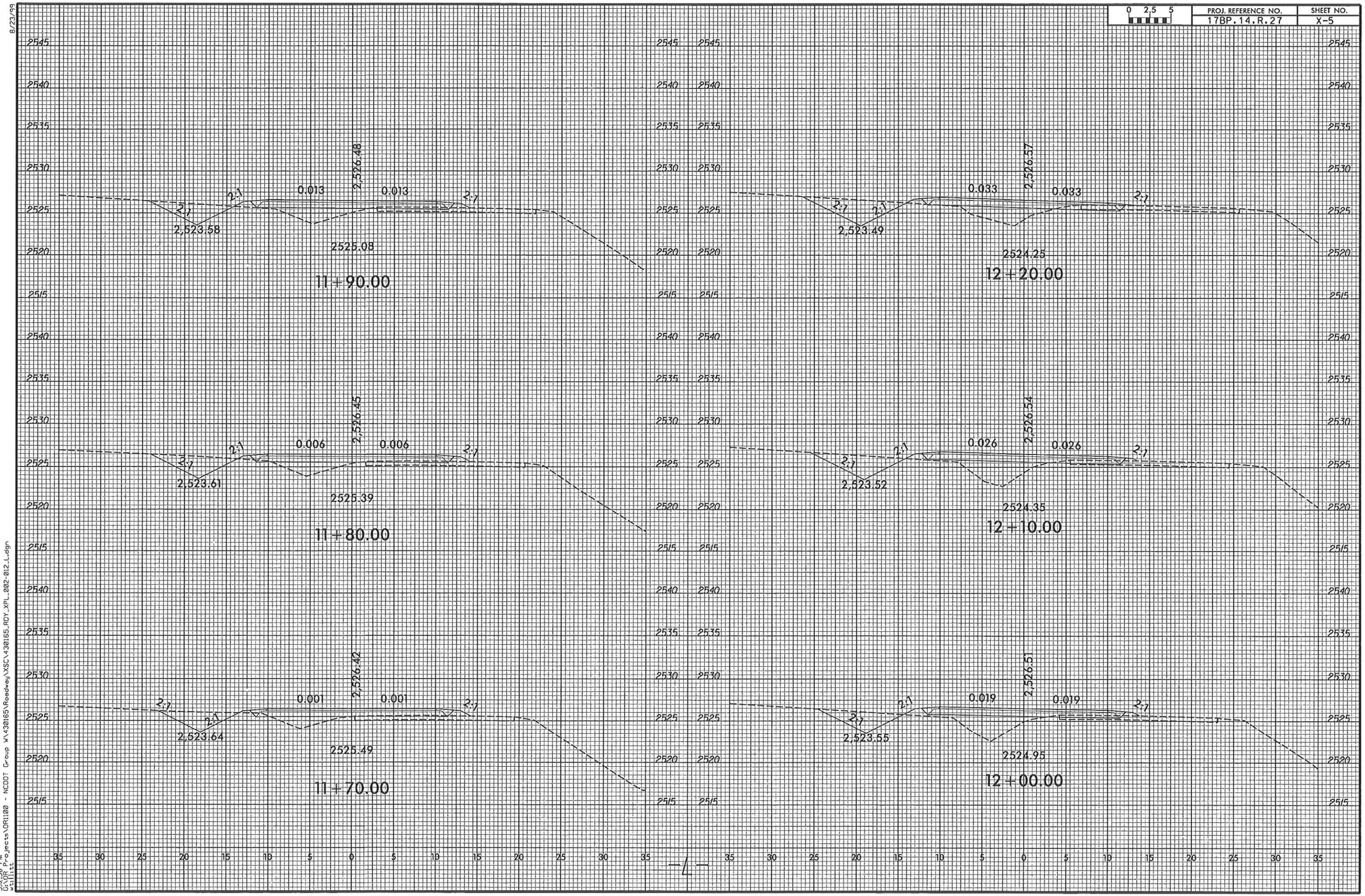

3:12:56 PM
G:\DR Projects\DR1100 - NCDOT Group W\430165\Roadway\XSC\430165_RDY_XPL_002-012_L.dgn
westlcc

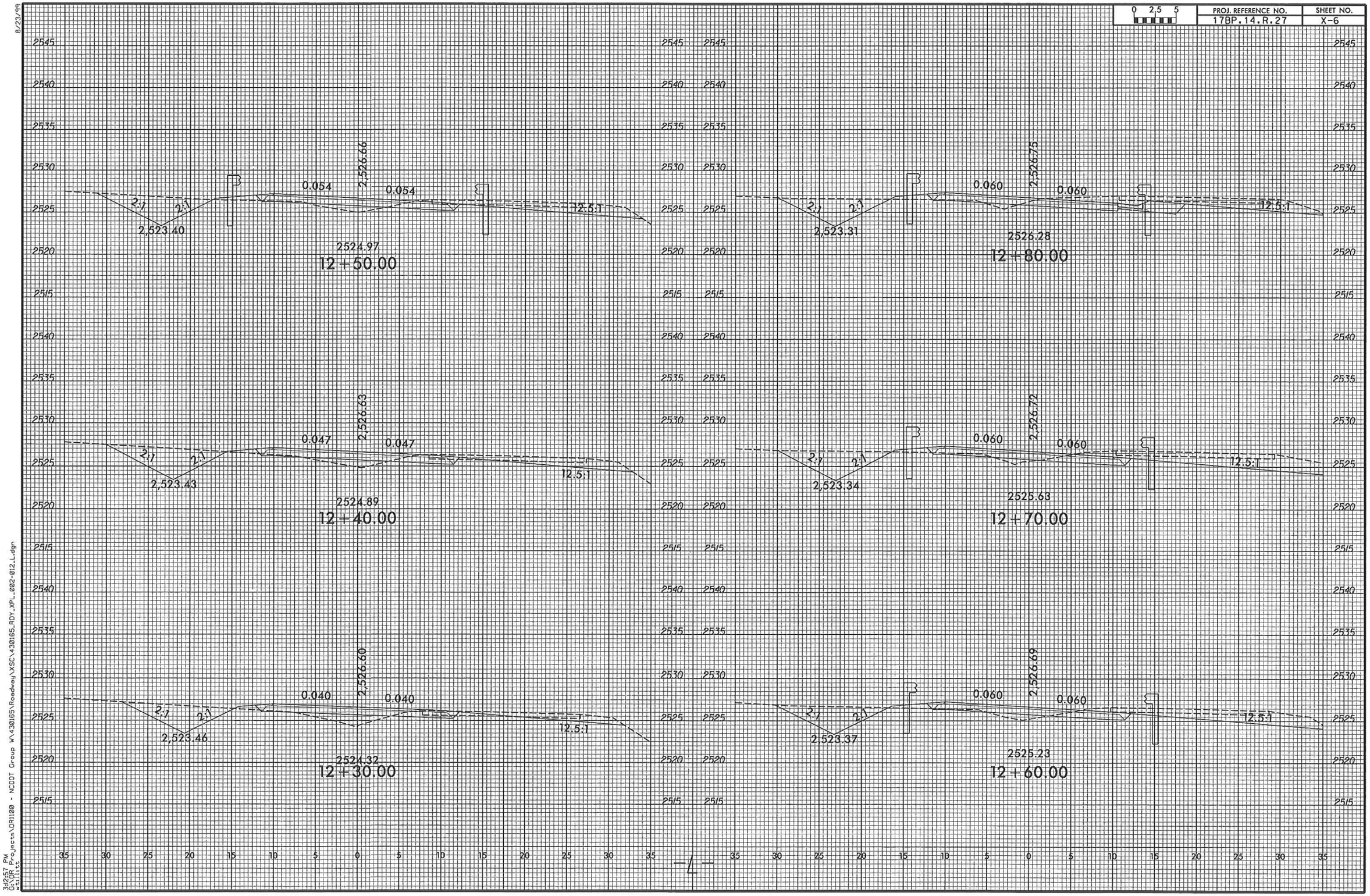

8/23/99
3:12:57 PM
G:\DR Projects\DR1100 - NCDOT Group W\430165\Roadway\XSC\430165_RDY_XPL_002-012_L.dgn
wellitt

8/23/99

0 2.5 5	PROJ. REFERENCE NO.	SHEET NO.
	17BP.14.R.27	X-7

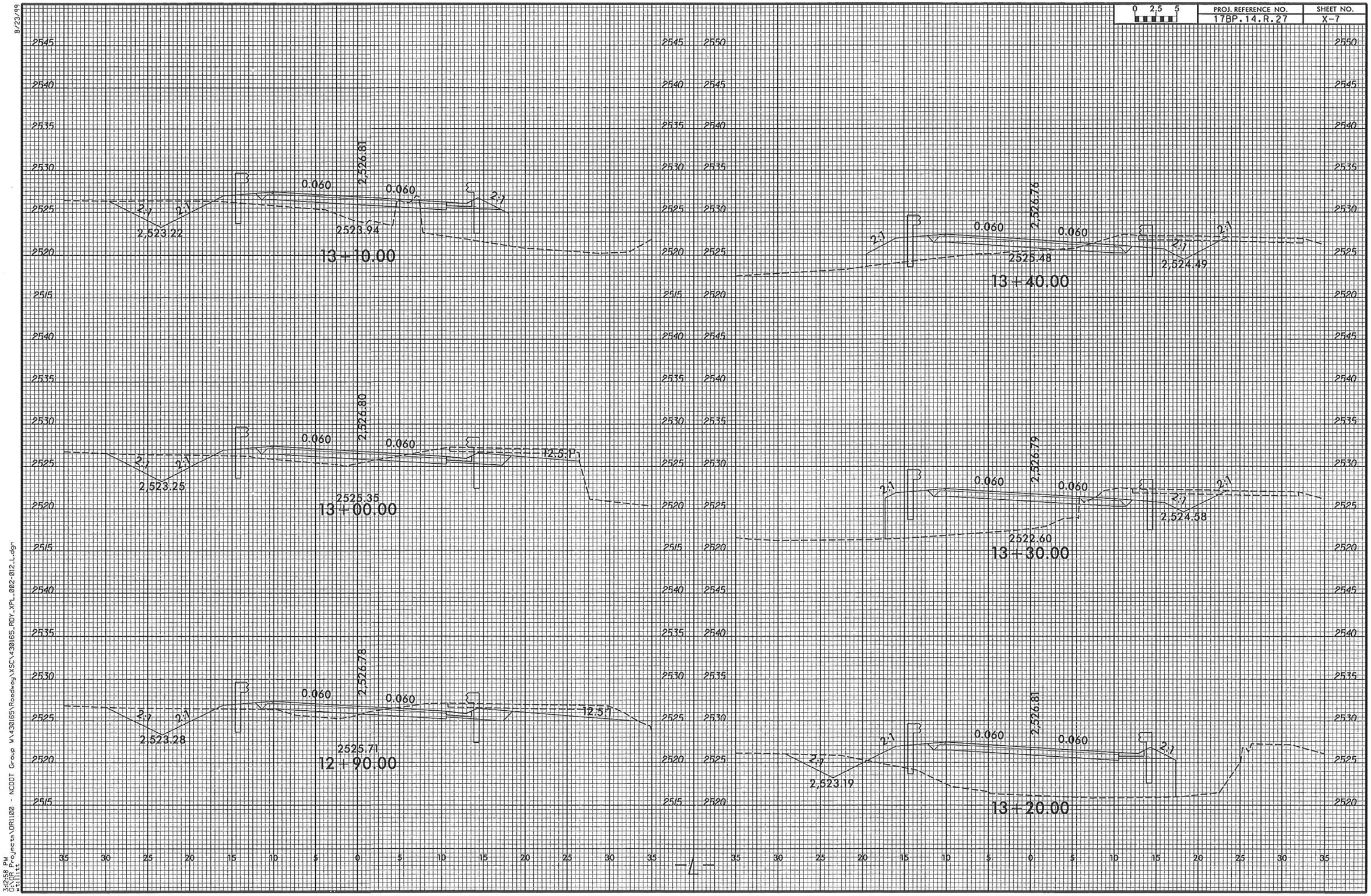

3:12:58 PM
G:\DR Projects\DR1100 - NCDOT Group W\430165\Roadway\XSC\430165_RDY_XPL_002-012_L.dgn
wellitt

0 2,5 5	PROJ. REFERENCE NO.	SHEET NO.
	17BP.14.R.27	X-8

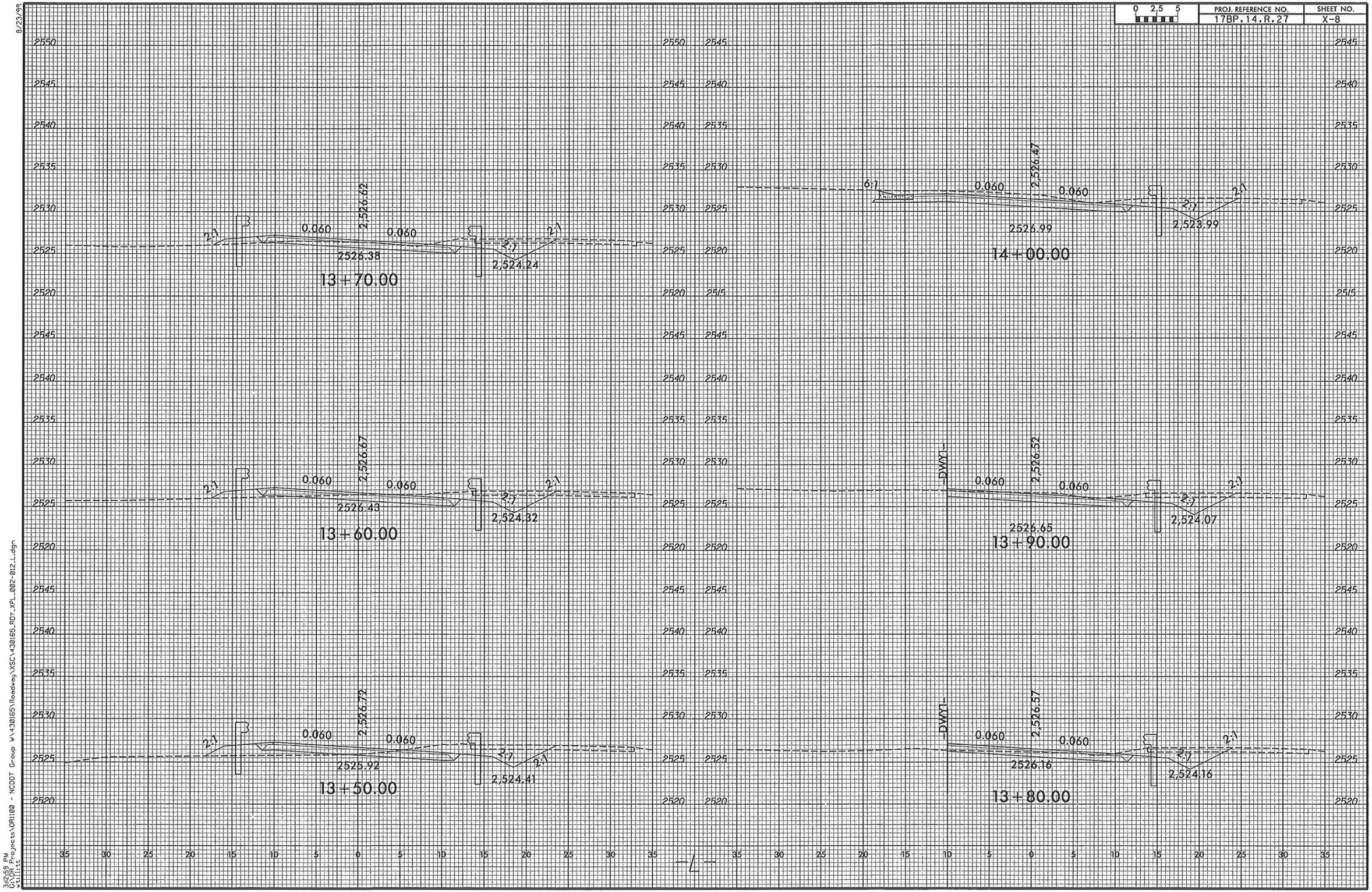

8/23/99

3:12:59 PM
G:\DR Projects\DRI100 - NCDOT Group W\430165\Roadway\XSC\430165_RDY_XPL_002-012_L.dgn
wellitt

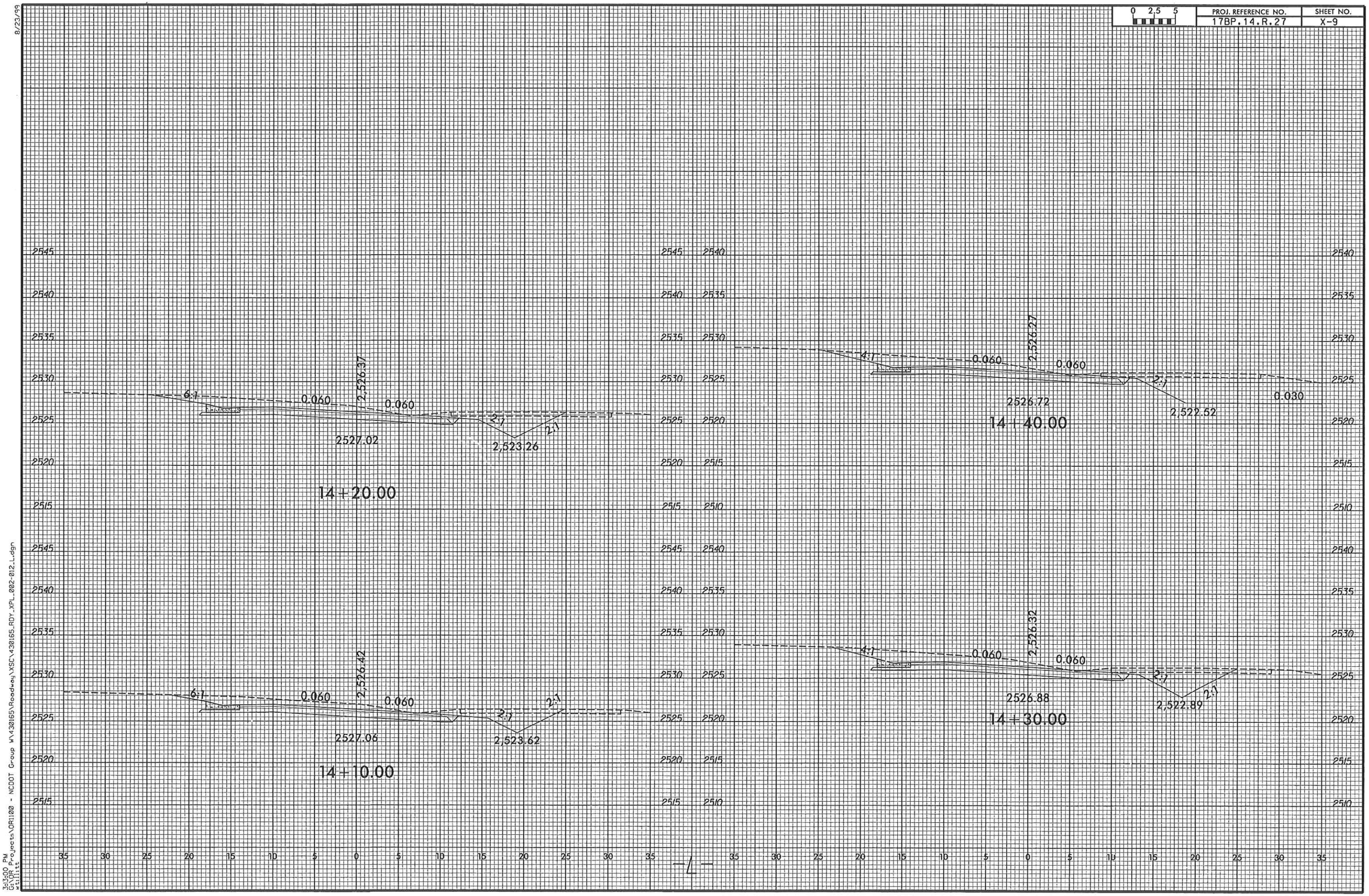
0 2.5 5
PROJ. REFERENCE NO.
17BP.14.R.27
SHEET NO.
X-9
8/23/99
6:1
0.060
2,526.37
0.060
2:1
2:1
2527.02
2,523.26
14+20.00
6:1
0.060
2,526.42
0.060
2:1
2:1
2527.06
2,523.62
14+10.00
4:1
0.060
2,526.27
0.060
2:1
2526.72
2,522.52
0.030
14+40.00
4:1
0.060
2,526.32
0.060
2:1
2:1
2526.88
2,522.89
14+30.00
-L-
3:13:00 PM
G:\OR Projects\OR1100 - NCDOT Group WX\43165\Roadway\XSC\43165_RDY_XPL_002-012_L.dgn
atilitt

0 2.5 5	PROJ. REFERENCE NO.	SHEET NO.
	17BP.14.R.27	X-10

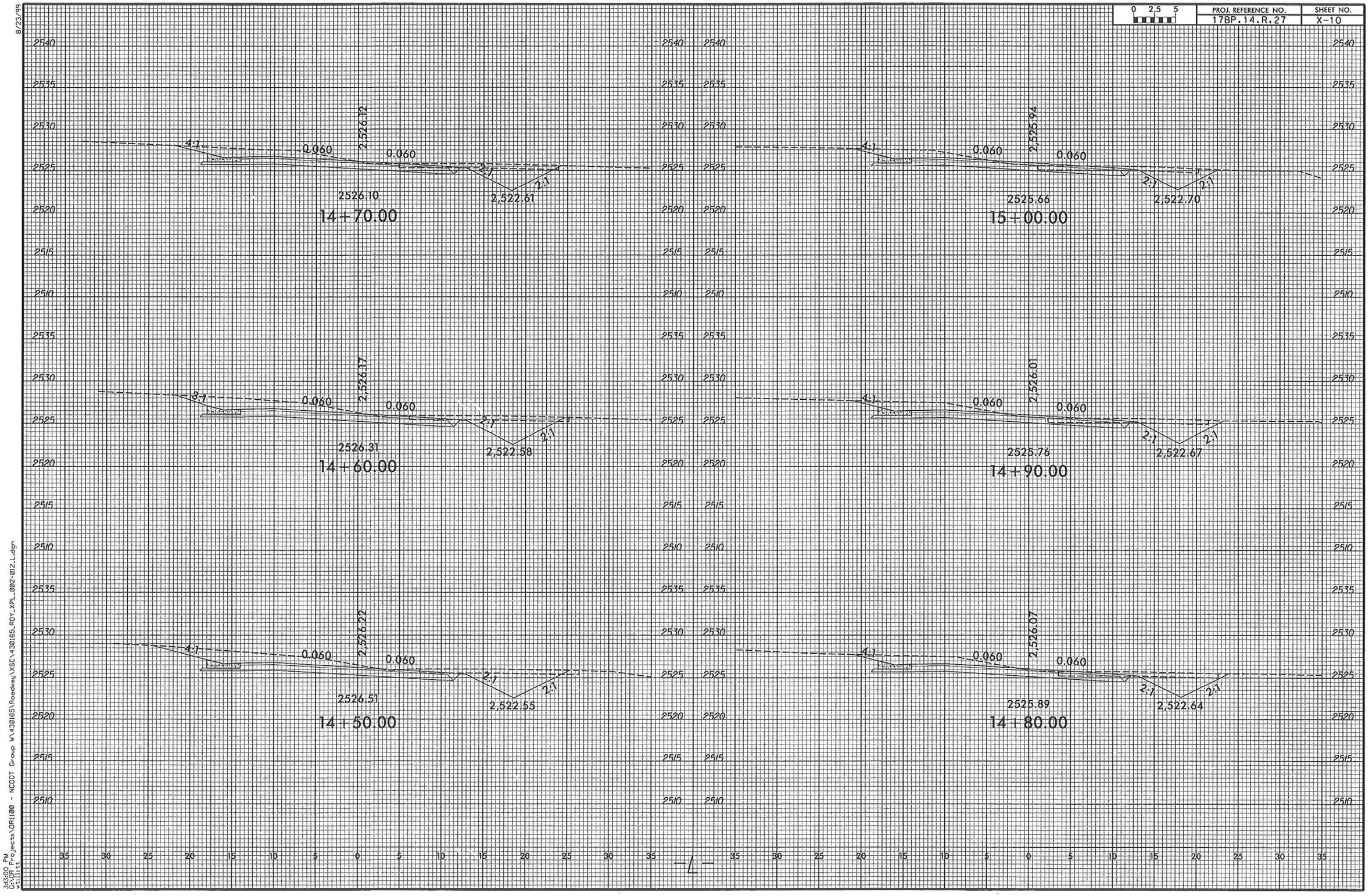

8/23/99

3:13:00 PM
G:\OR Projects\OR1100 - NCDOT Group W\430165\Roadway\XSC\430165_RDY_XPL_002-012_L.dgn
wtilitc

8/23/99

0 2.5 5	PROJ. REFERENCE NO.	SHEET NO.
	17BP.14.R.27	X-11

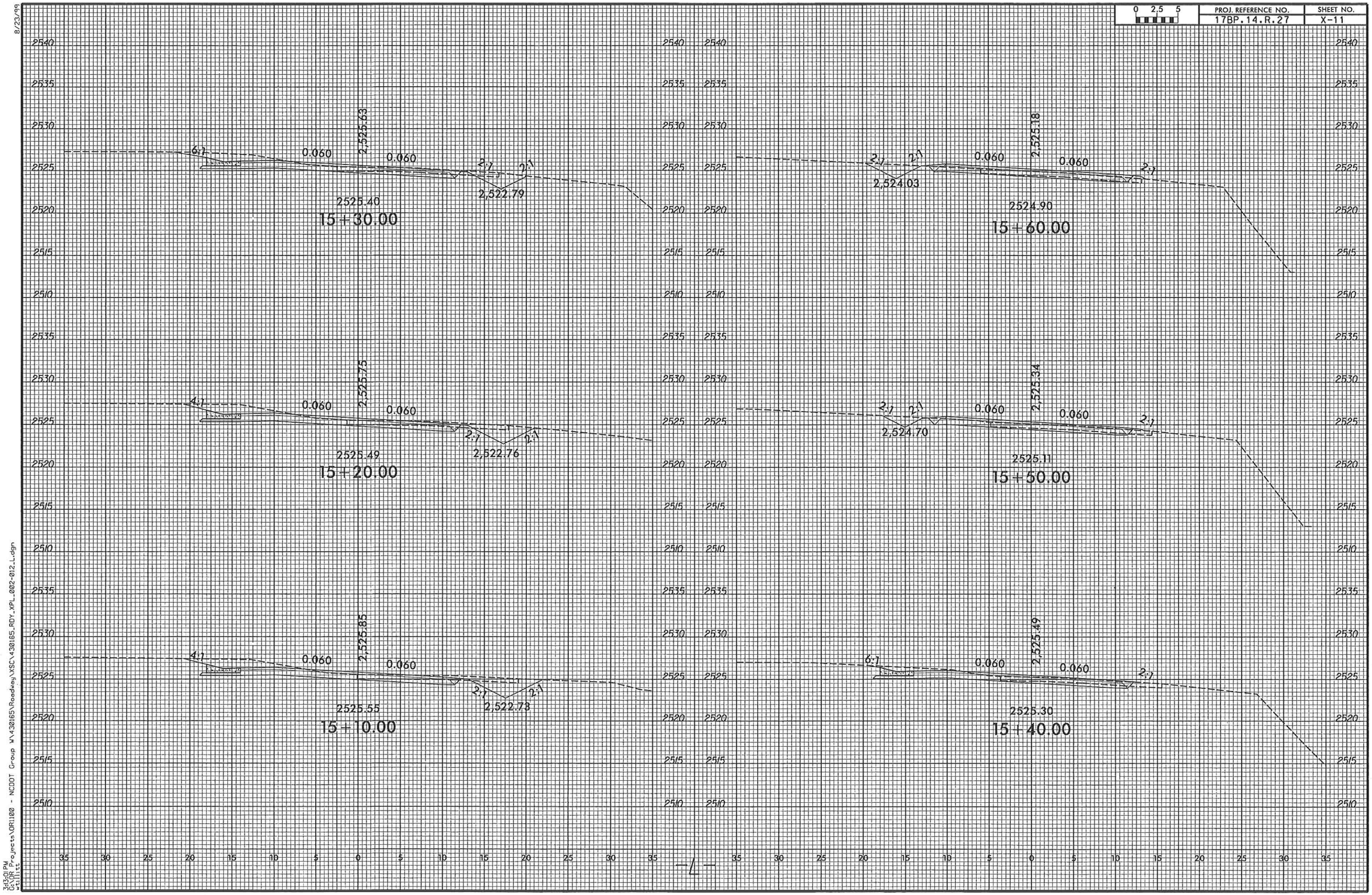

3:13:01 PM
G:\DR Projects\DR1100 - NCDOT Group W\430165\Roadway\XSC\430165_RDY_XPL_002-012_L.dgn
w:11:tt

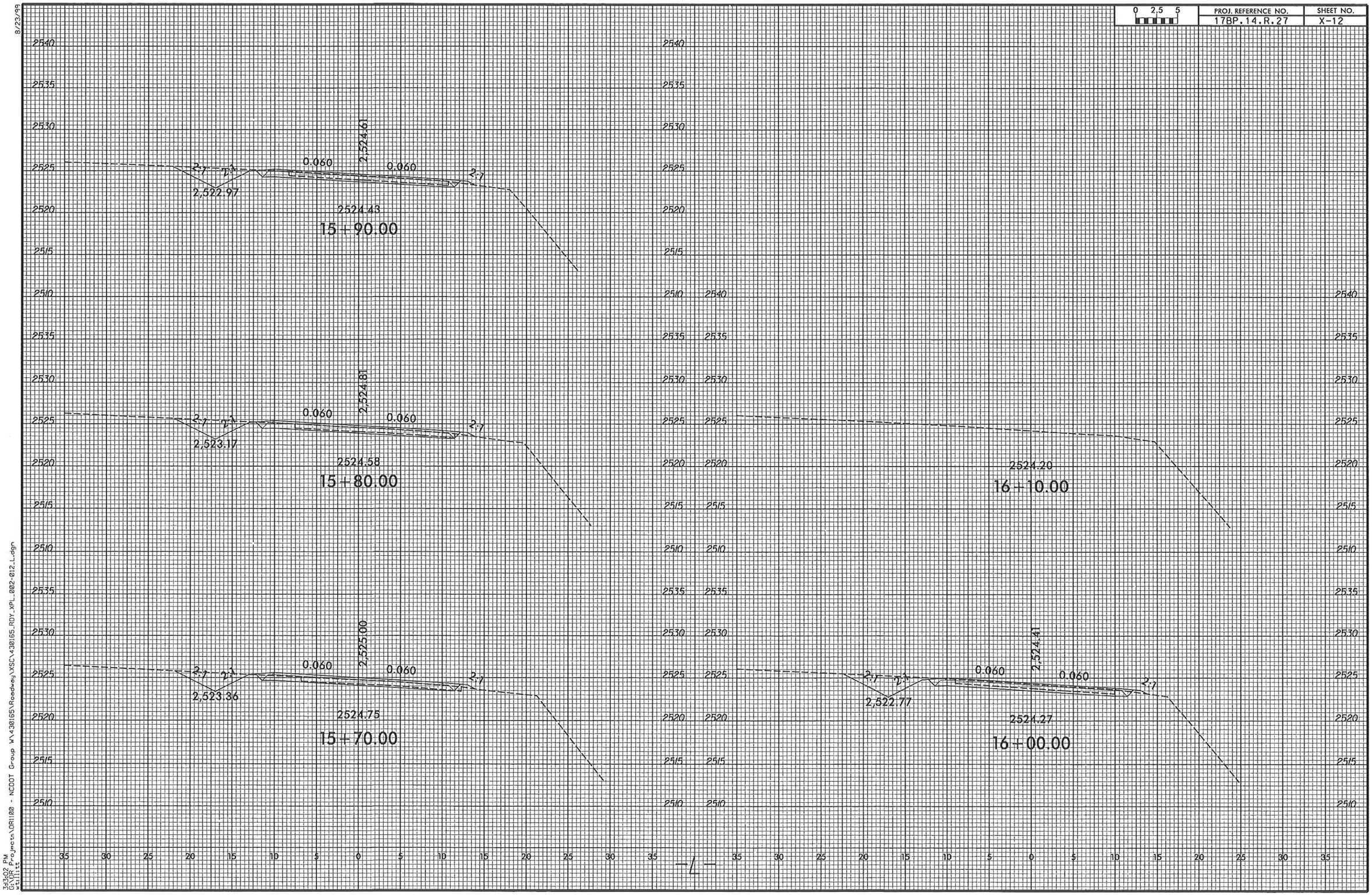

8/23/99
3:43:02 PM
G:\DR Projects\DR1100 - NCDOT Group W\430155\Roadway\XSC\430155_RDY_XPL_002-012_L.dgn
wellitzc

BM#1: RR SPIKE SET IN BASE OF 36" SYCAMORE 36.32' LT. STA 10+24.80 -BL- ELEV=2527.93'

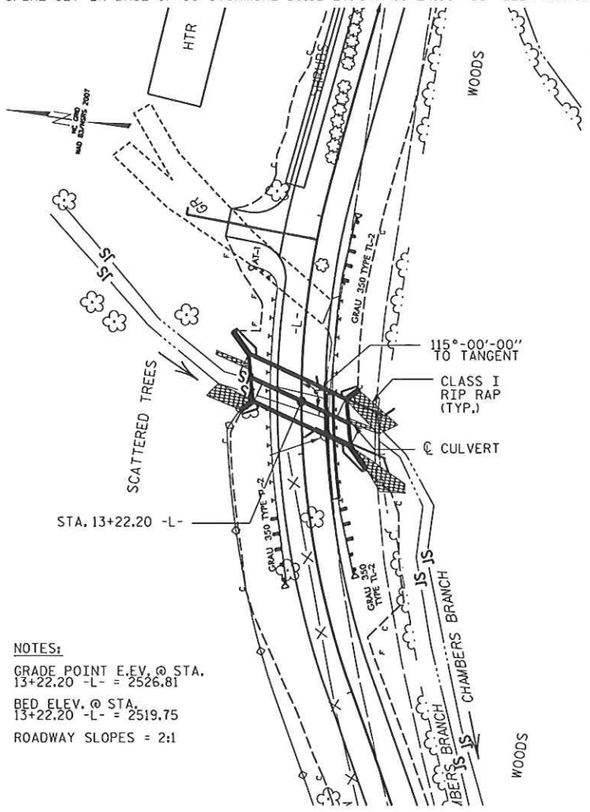

NOTES:

GRADE POINT E.EV. @ STA. 13+22.20 -L- = 2526.81

BED ELEV. @ STA. 13+22.20 -L- = 2519.75

ROADWAY SLOPES = 2:1

LOCATION SKETCH

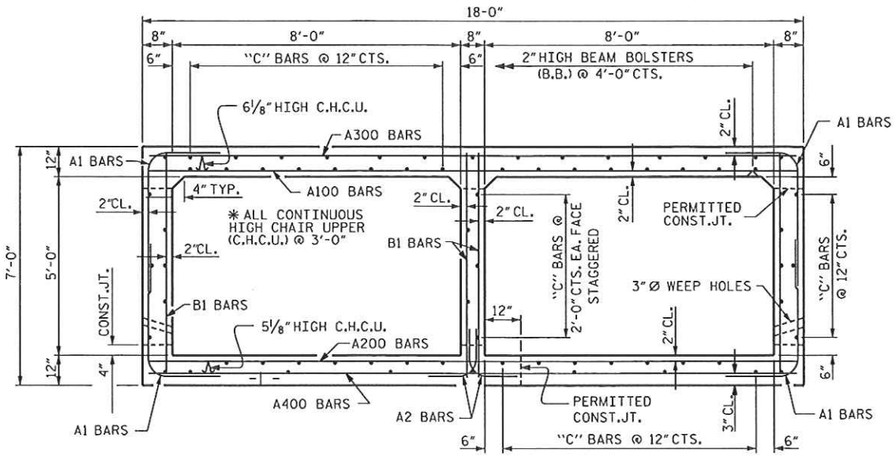

RIGHT ANGLE SECTION OF BARREL

THERE ARE 71 "C" BARS IN SECTION OF BARREL.

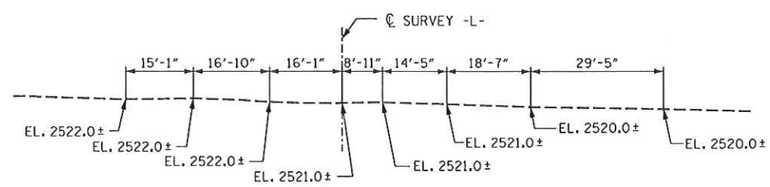

PROFILE ALONG ℄ CULVERT

NOTES

ASSUMED LIVE LOAD ----------HL-93 OR ALTERNATE LOADING.

DESIGN FILL----------2.09'.

FOR OTHER DESIGN DATA AND NOTES SEE STANDARD NOTE SHEET.

3" Ø WEEP HOLES INDICATED TO BE IN ACCORDANCE WITH THE SPECIFICATIONS.

CONCRETE IN CULVERTS TO BE POURED IN THE FOLLOWING ORDER:

1. WING FOOTINGS AND FLOOR SLAB INCLUDING 4" OF ALL VERTICAL WALLS.
2. THE REMAINING PORTIONS OF THE WALLS AND WINGS FULL HEIGHT FOLLOWED BY ROOF SLAB AND HEADWALLS.

THE RESIDENT ENGINEER SHALL CHECK THE LENGTH OF CULVERT BEFORE STAKING IT OUT STAKING IT OUT TO MAKE CERTAIN THAT IT WILL PROPERLY TAKE CARE OF THE FILL.

THIS BARREL STANDARD TO BE USED ONLY ON CULVERT ON 120° BE USED WITHKEW AND TO BE USED WITH STANDARD WING SHEET WITH THE SAME SKEW AND VERTICAL CLEARANCE.

DIMENSIONS FOR WING LAYOUT AS WELL AS ADDITIONAL REINFORCING STEEL EMBEDDED IN BARREL ARE SHOWN ON WING SHEET.

STEEL IN THE BOTTOM SLAB MAY BE SPLICED AT THE PERMITTED CONSTRUCTION JOINT AT THE CONTRACTOR'S OPTION. EXTRA WEIGHT OF STEEL DUE TO THE SPLICES SHALL BE PAID FOR BY CONTRACTOR.

AT THE CONTRACTOR'S OPTION, HE MAY SPLICE THE VERTICAL REINFORCING STEEL IN THE INTERIOR FACE OF EXTERIOR WALL AND BOTH FACES OF INTERIOR WALLS ABOVE LOWER WALL CONSTRUCTION JOINT. THE SPLICE LENGTH SHALL BE AS PROVIDED IN THE SPLICE LENGTH CHART SHOWN ON THE PLANS. EXTRA WEIGHT OF STEEL DUE TO THE SPLICES SHALL BE PAID FOR BY THE CONTRACTOR.

AT THE CONTRACTOR'S OPTION HE MAY SUBMIT, TO THE ENGINEER FOR APPROVAL, DESIGN AND DETAIL DRAWINGS FOR A PRECAST REINFORCED CONCRETE BOX CULVERT IN LIEU OF THE CAST-IN-PLACE CULVERT SHOWN ON THE PLANS. THE DESIGN SHALL PROVIDE THE SAME SIZE AND NUMBER OF BARRELS AS USED ON THE CAST-IN-PLACE DESIGN. FOR PRECAST REINFORCED CONCRETE BOX CULVERT, SEE SPECIAL PROVISIONS.

A 3 FOOT STRIP OF FILTER FABRIC SHALL BE ATTACHED TO THE FILL FACE OF THE WING COVERING THE ENTIRE LENGTH OF THE EXPANSION JOINT.

FOR CULVERT DIVERSION DETAILS AND PAY ITEM, SEE EROSION CONTROL PLANS.

AFTER SERVING AS A TEMPORARY STRUCTURE, THE EXISTING STRUCTURE CONSISTING OF 1 SPAN @ 18'-6", TIMBER FLOOR ON I-BEAMS WITH A CLEAR ROADWAY WIDTH OF 21'-4" ON 9 LINES 16 I-BEAMS ON TIMBER END BENT CAPS, TIMBER POST AND SILLS AT VARIOUS CENTERS AND LOCATED 15'-0" DOWN STREAM FROM PROPOSED STRUCTURE SHALL BE REMOVED.

REMOVAL OF THE EXISTING BRIDGE SHALL BE PERFORMED SO AS NOT TO ALLOW DEBRIS TO FALL INTO THE WATER. THE CONTRACTOR SHALL REMOVE THE BRIDGE AND SUBMIT PLANS FOR DEMOLITION IN ACCORDANCE WITH ARTICLE 402-2 OF THE STANDARD SPECIFICATIONS.

IN AS MUCH AS THE PAINT SYSTEM ON THE EXISTING STRUCTURAL STEEL CONTAINS LEAD, THE CONTRACTOR'S ATTENTION IS DIRECTED TO ARTICLE 107-1 OF THE STANDARD SPECIFICATIONS. ANY COSTS RESULTING FROM COMPLIANCE WITH APPLICABLE STATE OR FEDERAL REGULATIONS PERTAINING TO HANDLING OF MATERIALS CONTAINING LEAD BASED PAINT SHALL BE INCLUDED IN THE BID PRICE FOR "REMOVAL OF EXISTING STRUCTURE AT STATION 13+22.20 -L-."

FOR UTILITY INFORMATION, SEE UTILITY PLANS.

FOR SUBMITTAL OF WORKING DRAWINGS, SEE SPECIAL PROVISIONS.

FOR FALSEWORK AND FORMWORK, SEE SPECIAL PROVISIONS.

FOR CRANE SAFETY, SEE SPECIAL PROVISIONS.

FOR GROUT FOR STRUCTURES, SEE SPECIAL PROVISIONS.

HYDRAULIC DATA

DESIGN DISCHARGE	= 400 C.F.S.
FREQUENCY OF DESIGN FLOOD	= 25 YEARS
DESIGN HIGH WATER ELEVATION	= 2525.5'
DRAINAGE AREA	= 0.93 SQ. MI.
BASIC DISCHARGE (Q100)	= 600 C.F.S.
BASIC HIGH WATER ELEVATION	= 2527.7'

OVERTOPPING FLOOD DATA

OVERTOPPING DISCHARGE	= 580 C.F.S.
FREQUENCY OF OVERTOPPING FLOOD	= 100 + YEARS
OVERTOPPING FLOOD ELEVATION	= 2527.6'

TOTAL STRUCTURE QUANTITIES

CLASS A CONCRETE			REINFORCING STEEL		
STAGE I	58.4	C.Y	STAGE I	16,628	LBS.
STAGE II	35.4	C.Y	STAGE II	8,962	LBS.
TOTAL	93.8	C.Y	TOTAL	25,590	LBS.
FOUNDATION COND. MAT.'L			RIP RAP CLASS B		
STAGE I	45	TONS	STAGE I	26.6	TONS
STAGE II	24	TONS	STAGE II	13.7	TONS
TOTAL	69	TONS	TOTAL	40.3	TONS
CULVERT EXCAVATION -- LUMP SUM					
REMOVAL OF EXIST. STRUCTURE -- LUMP SUM					

FOUNDATION NOTES

SEE SECTION 414 OF THE STANDARD SPECIFICATIONS FOR CULVERT EXCAVATION AND BACKFILLING.

EXCAVATE AT LEAST 1 FOOT BELOW CULVERTS AND FOOTINGS AND REPLACE WITH COMPACTED FOUNDATION CONDITIONING MATERIAL.

ISOLATED AREAS WITH WEAK OR SOFT SUBGRADE MATERIALS MAY REQUIRE OVEREXCAVATION.

FOUNDATION CONDITIONING MATERIAL SHALL BE CLASS VI SELECT MATERIAL DESCRIBED IN SECTION 1016 OF THE STANDARD SPECIFICATIONS.

WING WALL BACKFILL SHALL BE CLASS II OR BETTER AS SPECIFIED IN SECTION 1016 OF THE STANDARD SPECIFICATIONS.

DEWATERING MAY BE REQUIRED DURING CONSTRUCTION.

PROJECT NO. 17BP.14.R.27

HAYWOOD COUNTY

STATION: 13+22.20 -L-

SHEET 1 OF 8 REPLACES BRIDGE #430165

STATE OF NORTH CAROLINA
DEPARTMENT OF TRANSPORTATION
RALEIGH

BARREL STANDARD
DOUBLE 8 FT. X 5 FT.
CONCRETE BOX CULVERT
115° SKEW

AUGUST 1989

NORTH CAROLINA PROFESSIONAL SEAL 14047 ENGINEER STEPHEN D. COOK
8/2/13

THE LOUIS BERGER GROUP, Inc.
1001 Wade Avenue, Suite 400
Raleigh, NC 27605-3322

REVISIONS								SHEET NO.
NO.	BY:	DATE:	NO.	BY:	DATE:			C-1
1			3					TOTAL SHEETS
2			4					8

ASSEMBLED BY : R. KNIGHT	DATE : APR. 2012	SPECIAL	
CHECKED BY : R. COFFMAN	DATE : APR. 2012		
DRAWN BY : B.M. MEYERS	DATE : AUG. 1989	STANDARD	
CHECKED BY : A.R. BISSETTE	DATE : AUG. 1989		

STD. NO. CB332A

G:\OR Projects\OR1100 - NCDOT Group W\430165\Structures\430165_STR_RCBC01.dgn
8/2/2013 1100_PDF_half_pltcfg 1100_str.tbl

BILL OF MATERIAL (STAGE 1)

BAR	NO.	SIZE	TYPE	LENGTH	WEIGHT	BAR	NO.	SIZE	TYPE	LENGTH	WEIGHT	BAR	NO.	SIZE	TYPE	LENGTH	WEIGHT	BAR	NO.	SIZE	TYPE	LENGTH	WEIGHT	BAR	NO.	SIZE	TYPE	LENGTH	WEIGHT	BAR	NO.	SIZE	TYPE	LENGTH	WEIGHT
A1	232	7	1	8'-9"	4149	A126	1	6	STR	13'-7"	20	A215	1	6	STR	5'-0"	8	A304	1	7	STR	14'-6"	30	A333	1	7	STR	8'-6"	17	A422	1	6	STR	17'-1"	26
A2	116	6	1	8'-3"	1437	A127	1	6	STR	12'-9"	19	A216	1	6	STR	4'-2"	6	A305	1	7	STR	13'-8"	28	A334	1	7	STR	7'-7"	16	A423	1	6	STR	16'-2"	24
						A128	1	6	STR	11'-11"	18	A217	1	6	STR	3'-3"	5	A306	1	7	STR	12'-10"	26	A335	1	7	STR	6'-9"	14	A424	1	6	STR	15'-4"	23
A100	37	6	STR	17'-8"	982	A129	1	6	STR	11'-6"	17	A218	1	6	STR	2'-5"	4	A307	1	7	STR	11'-11"	24	A336	1	7	STR	5'-11"	12	A425	1	6	STR	14'-5"	22
A101	1	6	STR	17'-2"	26	A130	1	6	STR	10'-2"	15	A219	1	6	STR	1'-6"	2	A308	1	7	STR	11'-1"	23	A337	1	7	STR	5'-1"	10	A426	1	6	STR	13'-7"	20
A102	1	6	STR	16'- 3"	24	A131	1	6	STR	9'-3"	14	A220	1	6	STR	17'-8"	27	A309	1	7	STR	10'-2"	21	A338	1	7	STR	4'-2"	9	A427	1	6	STR	12'-9"	19
A103	1	6	STR	15'-5"	23	A132	1	6	STR	8'-5"	13	A221	1	6	STR	17'-8"	27	A310	1	7	STR	9'-4"	19							A428	1	6	STR	11'-11"	18
A104	1	6	STR	14'-6"	22	A133	1	6	STR	7'-7"	11	A222	1	6	STR	17'-1"	26	A311	1	7	STR	8'-6"	17	A400	37	6	STR	17'-8"	982	A429	1	6	STR	11'-6"	17
A105	1	6	STR	13'-8"	21	A134	1	6	STR	6'-8"	10	A223	1	6	STR	16'-2"	24	A312	1	7	STR	7'-7"	16	A401	1	6	STR	17'-2"	26	A430	1	6	STR	10'-2"	15
A106	1	6	STR	12'-10"	19	A135	1	6	STR	5'-9"	9	A224	1	6	STR	15'-4"	23	A313	1	7	STR	6'-9"	14	A402	1	6	STR	16'-3"	24	A431	1	6	STR	9'-3"	14
A107	1	6	STR	11'-11"	18	A136	1	6	STR	4'-11"	7	A225	1	6	STR	14'-5"	22	A314	1	7	STR	5'-10"	12	A403	1	6	STR	15'-5"	23	A432	1	6	STR	8'-5"	13
A108	1	6	STR	11'-1"	17	A137	1	6	STR	4'-1"	6	A226	1	6	STR	13'-7"	20	A315	1	7	STR	5'-0"	10	A404	1	6	STR	14'-6"	22	A433	1	6	STR	7'-7"	11
A109	1	6	STR	10'-2"	15	A138	1	6	STR	3'-2"	5	A227	1	6	STR	12'-9"	19	A316	1	7	STR	4'-2"	9	A405	1	6	STR	13'-8"	21	A434	1	6	STR	6'-8"	10
A110	1	6	STR	9'-4"	14							A228	1	6	STR	11'-11"	18	A317	1	7	STR	3'-3"	7	A406	1	6	STR	12'-10"	19	A435	1	6	STR	5'-9"	9
A111	1	6	STR	8'-6"	13	A200	37	6	STR	17'-8"	982	A229	1	6	STR	11'-6"	17	A318	1	7	STR	2'-5"	5	A407	1	6	STR	11'-11"	18	A436	1	6	STR	4'-11"	7
A112	1	6	STR	7'-7"	11	A201	1	6	STR	17'-2"	26	A230	1	6	STR	10'-2"	15	A319	1	7	STR	1'-6"	3	A408	1	6	STR	11'-1"	17	A437	1	6	STR	4'-1"	6
A113	1	6	STR	6'-9"	10	A202	1	6	STR	16'-3"	24	A231	1	6	STR	9'-3"	14	A320	1	7	STR	17'-8"	36	A409	1	6	STR	10'-2"	15	A438	1	6	STR	3'-2"	5
A114	1	6	STR	5'-10"	9	A203	1	6	STR	15'-5"	23	A232	1	6	STR	8'-5"	13	A321	1	7	STR	17'-8"	36	A410	1	6	STR	9'-4"	14						
A115	1	6	STR	5'-0"	8	A204	1	6	STR	14'-6"	22	A233	1	6	STR	7'-7"	11	A322	1	7	STR	17'-8"	36	A411	1	6	STR	8'-6"	13	B1	174	6	STR	6'-7"	1721
A116	1	6	STR	4'-2"	6	A205	1	6	STR	13'-8"	21	A234	1	6	STR	6'-8"	10	A323	1	7	STR	17'-2"	35	A412	1	6	STR	7'-7"	11						
A117	1	6	STR	3'-3"	5	A206	1	6	STR	12'-10"	19	A235	1	6	STR	5'-9"	9	A324	1	7	STR	16'-4"	33	A413	1	6	STR	6'-9"	10	C1	142	4	STR	15'-6"	1470
A118	1	6	STR	2'-5"	4	A207	1	6	STR	11'-11"	18	A236	1	6	STR	4'-11"	7	A325	1	7	STR	15'-5"	32	A414	1	6	STR	5'-10"	9						
A119	1	6	STR	1'-6"	2	A208	1	6	STR	11'-1"	17	A237	1	6	STR	4'-1"	6	A326	1	7	STR	14'-7"	30	A415	1	6	STR	5'-0"	8	G1	4	5	STR	20'-3"	84
A120	1	6	STR	17'-8"	27	A209	1	6	STR	10'-2"	15	A238	1	6	STR	3'-2"	5	A327	1	7	STR	13'-9"	28	A416	1	6	STR	4'-2"	6						
A121	1	6	STR	17'-8"	27	A210	1	6	STR	9'-4"	14							A328	1	7	STR	12'-10"	26	A417	1	6	STR	3'-3"	5	S2	9	8	STR	20'-3"	487
A122	1	6	STR	17'-1"	26	A211	1	6	STR	8'-6"	13	A300	37	7	STR	17'-8"	1336	A329	1	7	STR	12'-0"	25	A418	1	6	STR	2'-5"	4						
A123	1	6	STR	16'-2"	24	A212	1	6	STR	7'-7"	11	A301	1	7	STR	17'-2"	35	A330	1	7	STR	11'-2"	23	A419	1	6	STR	1'-6"	2						
A124	1	6	STR	15'-4"	23	A213	1	6	STR	6'-9"	10	A302	1	7	STR	16'-3"	33	A331	1	7	STR	10'-3"	21	A420	1	6	STR	17'-8"	27						
A125	1	6	STR	14'-5"	22	A214	1	6	STR	5'-10"	9	A303	1	7	STR	15'-5"	32	A332	1	7	STR	9'-4"	19	A421	1	6	STR	17'-8"	27						

BILL OF MATERIAL (STAGE 2)

BAR	NO.	SIZE	TYPE	LENGTH	WEIGHT	BAR	NO.	SIZE	TYPE	LENGTH	WEIGHT	BAR	NO.	SIZE	TYPE	LENGTH	WEIGHT	BAR	NO.	SIZE	TYPE	LENGTH	WEIGHT	BAR	NO.	SIZE	TYPE	LENGTH	WEIGHT	BAR	NO.	SIZE	TYPE	LENGTH	WEIGHT
A1	124	7	1	8'-9"	2218	A112	2	6	STR.	7'-7"	23	A207	2	6	STR.	11'-11"	36	A302	2	7	STR.	16'-3"	66	A318	2	7	STR.	2'-5"	10	A413	2	6	STR.	6'-9"	20
						A113	2	6	STR.	6'-9"	20	A208	2	6	STR.	11'-1"	33	A303	2	7	STR.	15'-5"	63	A319	2	7	STR.	1'-6"	6	A414	2	6	STR.	5'-10"	18
A2	62	6	1	8'-3"	768	A114	2	6	STR.	5'-10"	18	A209	2	6	STR.	10'-2"	31	A304	2	7	STR.	14'-6"	59							A415	2	6	STR.	5'-0"	15
						A115	2	6	STR.	5'-0"	15	A210	2	6	STR.	9'-4"	28	A305	2	7	STR.	13'-8"	56	A400	10	6	STR.	17'-8"	265	A416	2	6	STR.	4'-2"	13
A100	10	6	STR.	17'-8"	265	A116	2	6	STR.	4'-2"	13	A211	2	6	STR.	8'-6"	26	A306	2	7	STR.	12'-10"	52	A401	2	6	STR.	17'-2"	52	A417	2	6	STR.	3'-3"	10
A101	2	6	STR.	17'-2"	52	A117	2	6	STR.	3'-3"	10	A212	2	6	STR.	7'-7"	23	A307	2	7	STR.	11'-11"	49	A402	2	6	STR.	16'-3"	49	A418	2	6	STR.	2'-5"	7
A102	2	6	STR.	16'-3"	49	A118	2	6	STR.	2'-5"	7	A213	2	6	STR.	6'-9"	20	A308	2	7	STR.	11'-1"	45	A403	2	6	STR.	15'-5"	46	A419	2	6	STR.	1'-6"	5
A103	2	6	STR.	15'-5"	46	A119	2	6	STR.	1'-6"	5	A214	2	6	STR.	5'-10"	18	A309	2	7	STR.	10'-2"	42	A404	2	6	STR.	14'-6"	44						
A104	2	6	STR.	14'-6"	44							A215	2	6	STR.	5'-0"	15	A310	2	7	STR.	9'-4"	38	A405	2	6	STR.	13'-8"	41	B1	94	6	STR.	6'-7"	929
A105	2	6	STR.	13'-8"	41	A200	10	6	STR.	17'-8"	265	A216	2	6	STR.	4'-2''	13	A311	2	7	STR.	8'-6"	35	A406	2	6	STR.	12'-10"	39						
A106	2	6	STR.	12'-10"	39	A201	2	6	STR.	17'-2"	52	A217	2	6	STR.	3'-3''	10	A312	2	7	STR.	7'-7"	31	A407	2	6	STR.	11'-11"	36	C1	71	4	STR.	15'-1''	715
A107	2	6	STR.	11'-11"	36	A202	2	6	STR.	16'-3"	49	A218	2	6	STR.	2'-5''	7	A313	2	7	STR.	6'-9"	28	A408	2	6	STR.	11'-1"	33						
A108	2	6	STR.	11'-1"	33	A203	2	6	STR.	15'-5"	46	A219	2	6	STR.	1'-6''	5	A314	2	7	STR.	5'-10"	24	A409	2	6	STR.	10'-2"	31	G1	4	5	STR.	20'-3''	84
A109	2	6	STR.	10'-2"	31	A204	2	6	STR.	14'-6"	44							A315	2	7	STR.	5'-0"	20	A410	2	6	STR.	9'-4"	28						
A110	2	6	STR.	9'-4"	28	A205	2	6	STR.	13'-8"	41	A300	10	7	STR.	17'-8"	361	A316	2	7	STR.	4'-2''	17	A411	2	6	STR.	8'-6"	26	S2	6	8	STR.	20'-3''	324
A111	2	6	STR.	8'-6"	26	A206	2	6	STR.	12'-10"	39	A301	2	7	STR.	17'-2"	70	A317	2	7	STR.	3'-3''	13	A412	2	6	STR.	7'-7"	23						

BAR TYPES

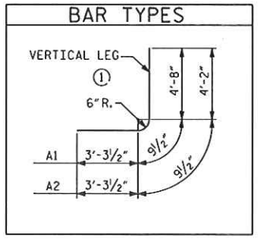

TOTAL STRUCTURE QUANTITIES (STAGE 1)

CLASS A CONCRETE

BARREL @ 1.7 CY/FT 49.3 C.Y.

WING ETC. 8.5 C.Y.

SILLS 0.6 C.Y.

TOTAL 58.4 C.Y.

REINFORCING STEEL

BARREL 16,192 LBS.

WINGS ETC. 406 LBS.

SILLS 30 LBS.

TOTAL 16,628 LBS.

FOUNDATION COND. MAT.'L	45	TONS
CLASS "B" RIP RAP	26.6	TONS
CULVERT EXCAVATION	LUMP SUM	

TOTAL STRUCTURE QUANTITIES (STAGE 2)

CLASS A CONCRETE

BARREL @ 1.7 CY/FT 26.3 C.Y.

WING ETC. 8.5 C.Y.

SILLS 0.6 C.Y.

TOTAL 35.4 C.Y.

REINFORCING STEEL

BARREL 8,526 LBS.

WINGS ETC. 406 LBS.

SILLS 30 LBS.

TOTAL 8,962 LBS.

FOUNDATION COND. MAT.'L	24	TONS
CLASS "B" RIP RAP	13.7	TONS
CULVERT EXCAVATION	LUMP SUM	
REMOVAL OF EXIST. STRUCTURE	LUMP SUM	

PROJECT NO. 17BP.14.R.27

HAYWOOD COUNTY

STATION: 13+22.20 -L-

SHEET 2 OF 8 REPLACES BRIDGE #430165

STATE OF NORTH CAROLINA
DEPARTMENT OF TRANSPORTATION
RALEIGH

BILL OF MATERIAL DOUBLE 8 FT. X 5 FT. CONCRETE BOX CULVERT

NORTH CAROLINA PROFESSIONAL SEAL 14047 ENGINEER STEPHEN D. COOK
8/13/13

THE LOUIS BERGER GROUP, Inc.
1001 Wade Avenue, Suite 400
Raleigh, NC 27605-3322

REVISIONS						SHEET NO.
NO.	BY:	DATE:	NO.	BY:	DATE:	C-2
1			3			TOTAL SHEETS 8
2			4			

DRAWN BY : J. MYA DATE : JUNE 1
CHECKED BY : S. COOK DATE : JUNE 4

G:\OR Projects\OR1100 - NCDOT Group W\430165\Structures\430165_STR_RCBC02.dgn
8/2/2013 1100_PDF_half.pltcfg 1100_str.tbl

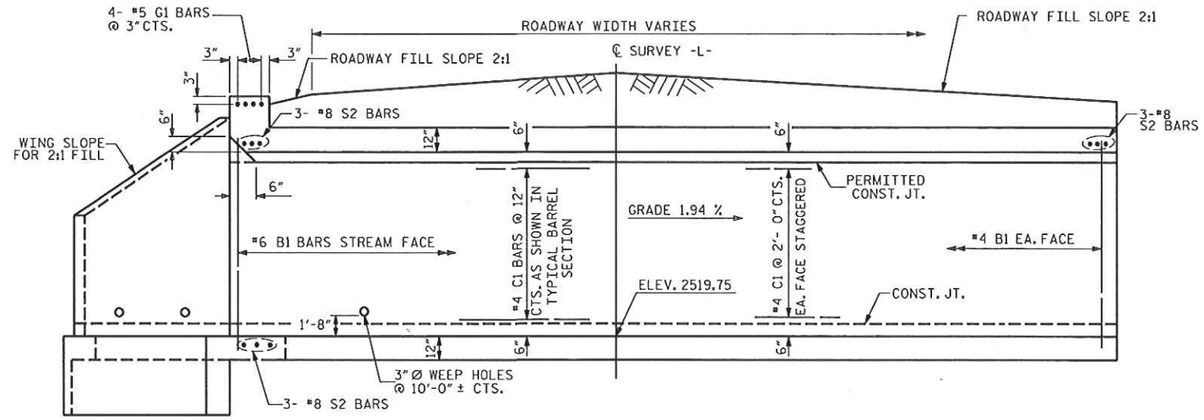

EXTERIOR WALL INTERIOR WALL

CULVERT SECTION NORMAL TO ROADWAY

(STAGE 1)

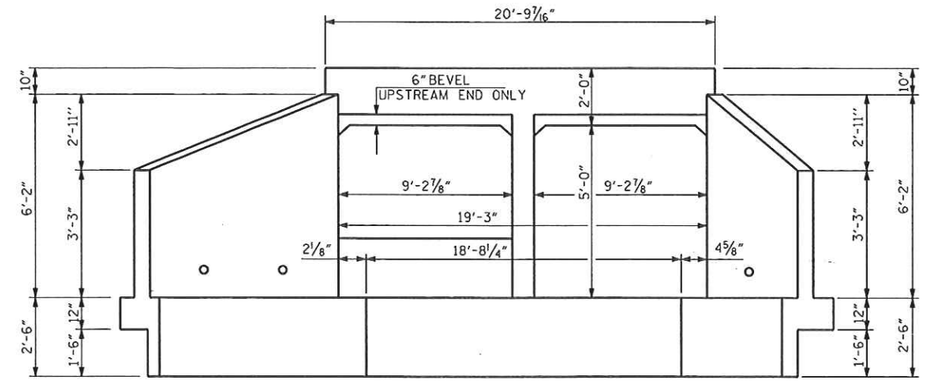

END ELEVATION NORMAL TO SKEW

FOR SILL DETAILS, SEE SHEEET 5 OF 8.
(LOOKING DOWNSTREAM)

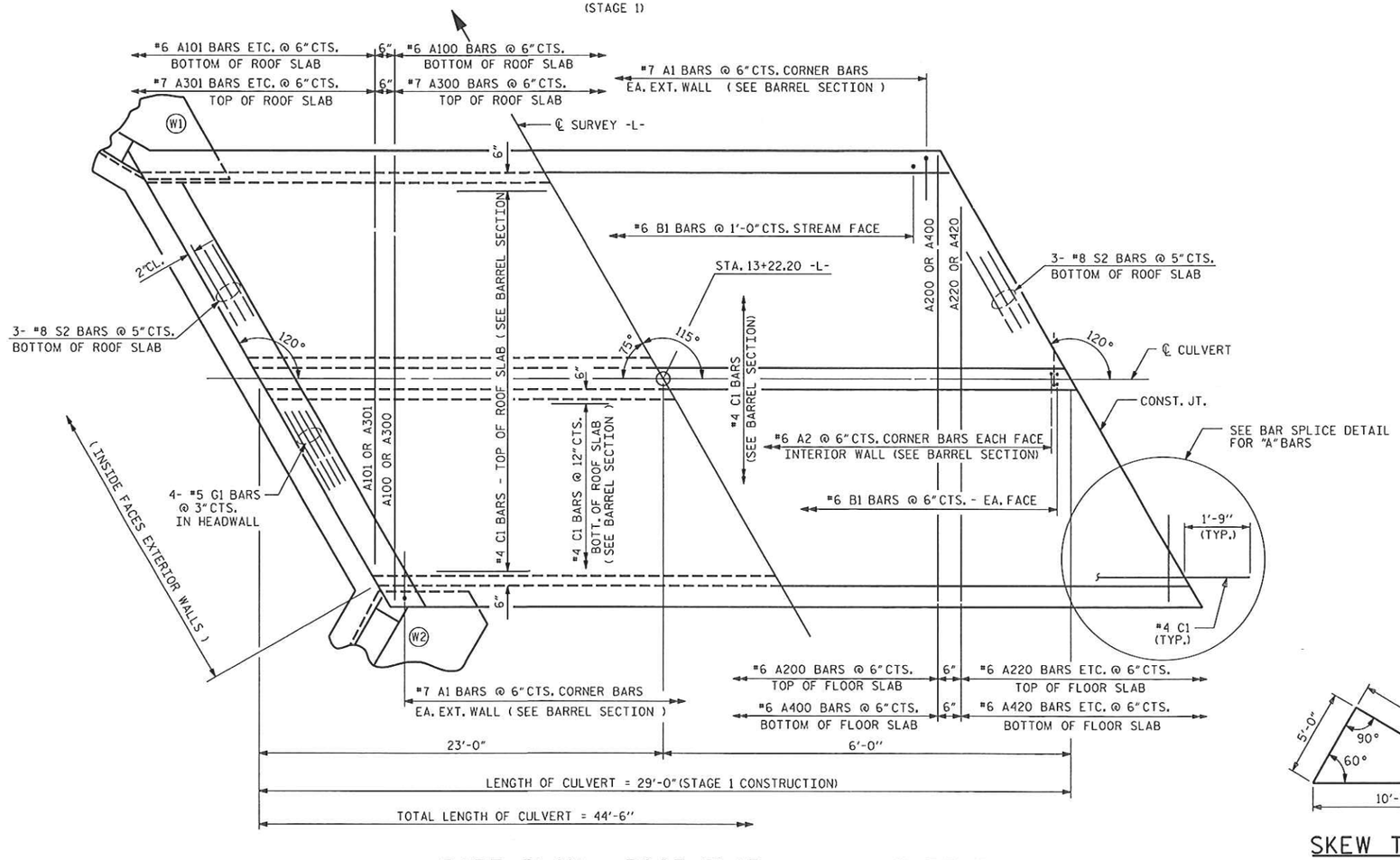

PART PLAN - ROOF SLAB

(STAGE 1)

PART PLAN - FLOOR SLAB

(STAGE 1)

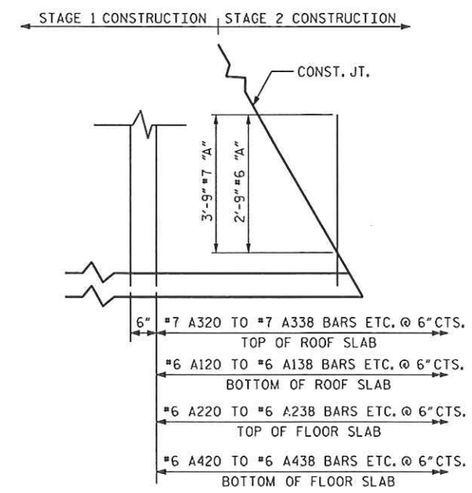

BAR SPLICE DETAIL AT STAGE 1 CONSTRUCTION JOINT

SHOWING PROJECTION OF "A" BARS

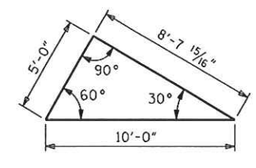

SKEW TRIANGLE

PROJECT NO. 17BP.14.R.27
HAYWOOD COUNTY
STATION: 13+22.20 -L-

SHEET 3 OF 8

STATE OF NORTH CAROLINA
DEPARTMENT OF TRANSPORTATION
RALEIGH

BARREL STANDARD

DOUBLE 8 FT. x 5 FT. CONCRETE BOX CULVERT 115° SKEW

1971

ASSEMBLED BY : R. KNIGHT DATE : APR. 2012			
CHECKED BY : R. COFFMAN DATE : APR. 2012			
DRAWN BY : W.BRYAN STALEY II DATE : NOV.5,1971			
CHECKED BY : JOEL A. JOHNSON DATE : NOV.13,1971			

SPECIAL STANDARD

THE LOUIS BERGER GROUP, Inc.
1001 Wade Avenue, Suite 400

REVISIONS						SHEET NO.
NO.	BY:	DATE:	NO.	BY:	DATE:	C-3
1			3			TOTAL SHEETS
2			4			8

STD. NO. CB332

REVISED 11-19-99 BY M.M. CHECKED BY R.W.W.
REVISED 8-28-92 BY E.L.R. CHECKED BY G.R.P.
REDRAWN 8/1990 BY S.A.T. CHECKED BY E.L.R.

G:\OR Projects\OR1100 - NCDOT Group W\430165\Structures\430165_STR_RCBC03.DGN
8/2/2013 1100_PDF_half.pltcfg 1100_str.tbl

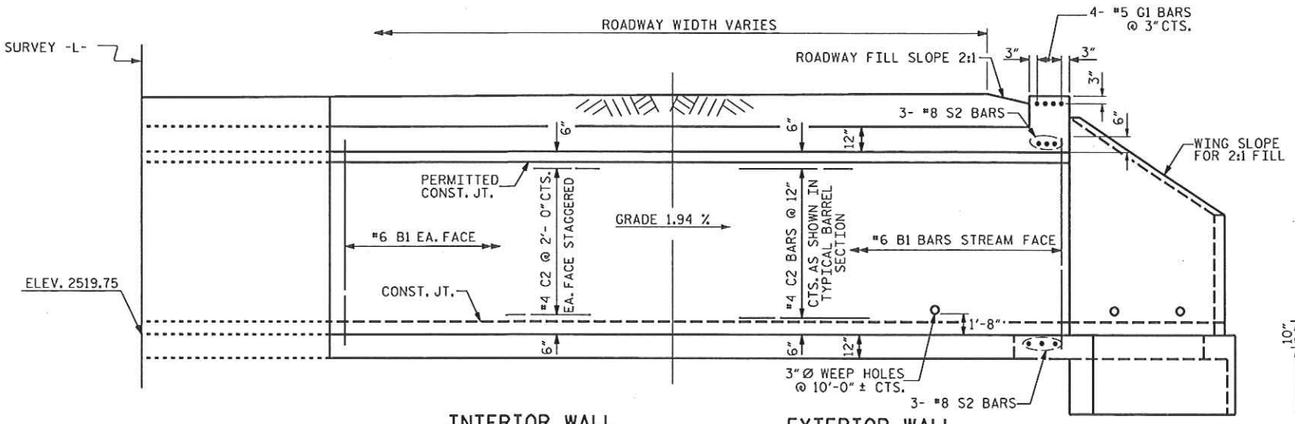

INTERIOR WALL

EXTERIOR WALL

CULVERT SECTION NORMAL TO ROADWAY

(STAGE 2)

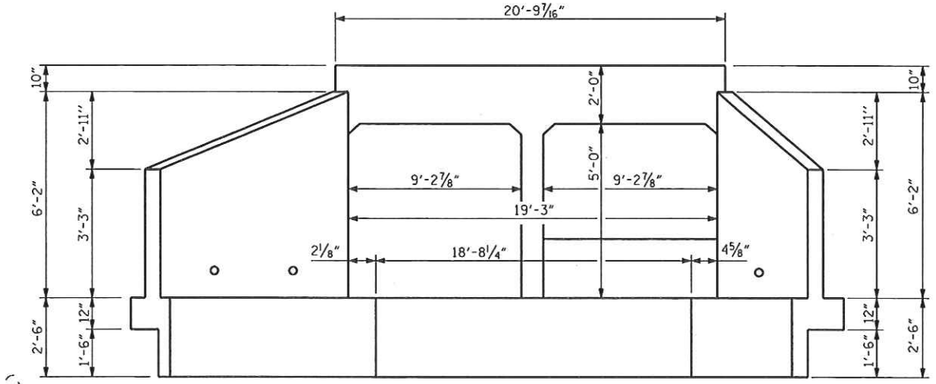

END ELEVATION NORMAL TO SKEW

FOR SILL DETAILS , SEE SHEET 5 OF 8.
(LOOKING UPSTREAM)

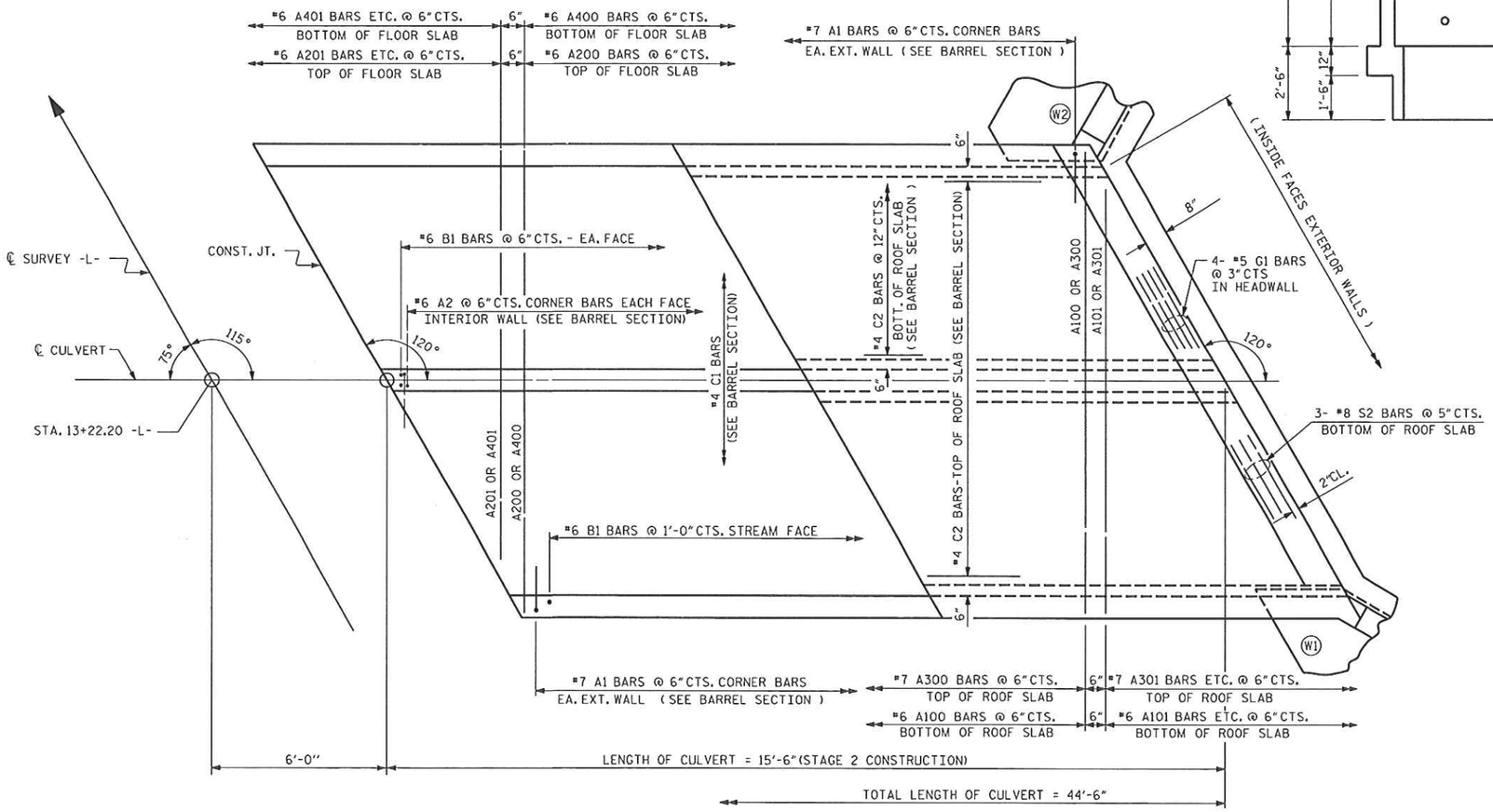

PART PLAN - FLOOR SLAB

(STAGE 2)

PART PLAN - ROOF SLAB

(STAGE 2)

PROJECT NO. 17BP.14.R.27

HAYWOOD COUNTY

STATION: 13+22.20 -L-

SHEET 4 OF 8

STATE OF NORTH CAROLINA
DEPARTMENT OF TRANSPORTATION
RALEIGH

BARREL STANDARD

DOUBLE 8 FT. x 5 FT. CONCRETE BOX CULVERT 115° SKEW

1971

NORTH CAROLINA PROFESSIONAL SEAL 14047 ENGINEER STEPHEN D. COOK
6/27/13

THE LOUIS BERGER GROUP, Inc.
1001 Wade Avenue, Suite 400
Raleigh, NC 27605-3322

REVISIONS						
NO.	BY:	DATE:	NO.	BY:	DATE:	
1			3			
2			4			

SHEET NO. C-4

TOTAL SHEETS 8

ASSEMBLED BY : R. KNIGHT	DATE : APR. 2012	SPECIAL	
CHECKED BY : R. COFFMAN	DATE : APR. 2012		
DRAWN BY : W.BRYAN STALEY II	DATE : NOV.5,1971	STANDARD	
CHECKED BY : JOEL A. JOHNSON	DATE : NOV.13,1971		

STD. NO. CB332

G:\OR Projects\OR1100 - NCDOT Group W\430165\Structures\430165_STR_RCBC04.DGN
8/2/2013 1100_PDF_half_pltcfg 1100_str.tbl

REVISED 11-19-99 BY M.M. CHECKED BY R.W.K.
REVISED 8-28-92 BY E.L.R. CHECKED BY G.P.
REDRAWN 8/1990 BY S.A.T. CHECKED BY E.L.R.

NOTES:

PLACE SILLS AT INLET AND OUTLET OF CULVERT ONLY. SET ASIDE EXCAVATED NATURAL BED MATERIAL AND USE IT TO BACKFILL INSIDE BOTTOM OF RCBC CELLS. NATIVE STONE SIMILAR IN SIZE TO CLASS B RIP-RAP MAY BE USED TO SUPPLEMENT NATURAL BED MATERIAL.

SILLS SHALL BE 1.0 FT. WIDE, CAST SEPARATELY AND ATTACHED WITH DOWELS.

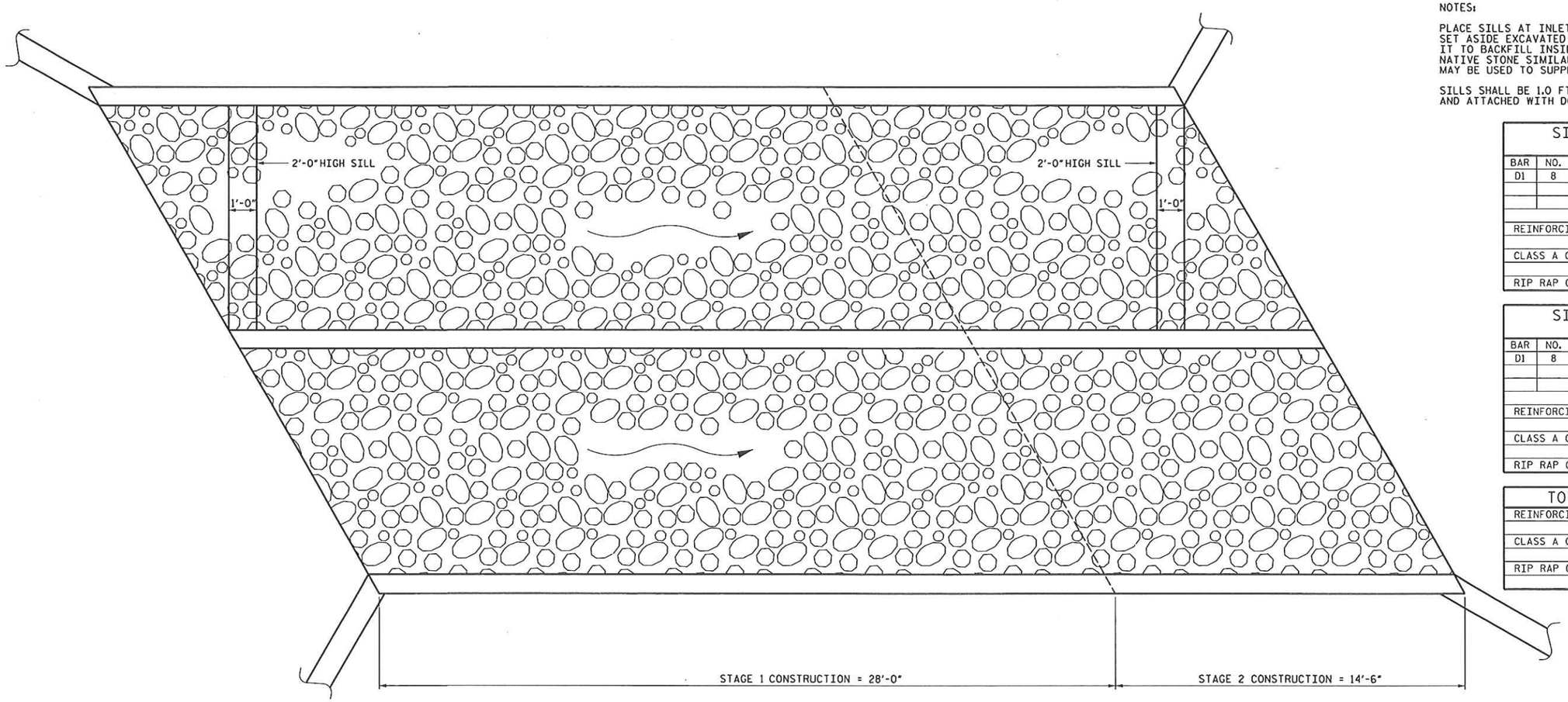

PLAN

SILL QUANTITIES STAGE 1					
BAR	NO.	SIZE	TYPE	LENGTH	WEIGHT
D1	8	#6	STR	2'-6"	30
REINFORCING STEEL					30 LBS
CLASS A CONCRETE					0.6 CY
RIP RAP CLASS B					26.6 TONS

SILL QUANTITIES STAGE 2					
BAR	NO.	SIZE	TYPE	LENGTH	WEIGHT
D1	8	#6	STR	2'-6"	30
REINFORCING STEEL					30 LBS
CLASS A CONCRETE					0.6 CY
RIP RAP CLASS B					13.7 TONS

TOTAL QUANTITIES	
REINFORCING STEEL	60 LBS
CLASS A CONCRETE	1.0 CY
RIP RAP CLASS B	40.3 TONS

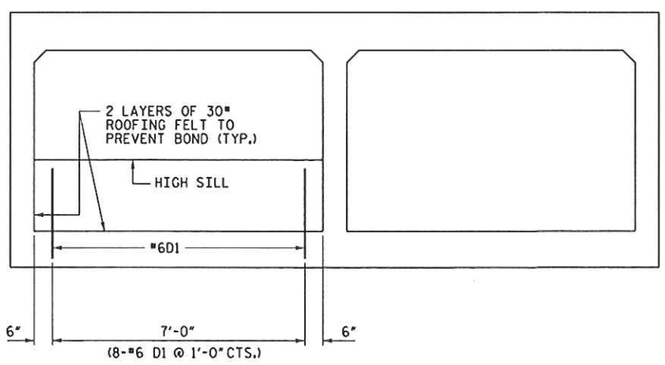

ELEVATION VIEW - INLET

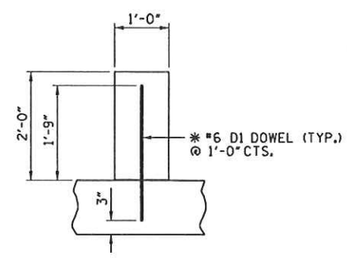

* DOWELS MAY BE PUSHED INTO GREEN CONCRETE AFTER SLAB HAS BEEN FLOAT FINISHED

SECTION THRU 2'-0" SILL

PROJECT NO. 17BP.14.R.27
HAYWOOD COUNTY
STATION: 13+22.02 -L-

SHEET 5 OF 8

STATE OF NORTH CAROLINA
DEPARTMENT OF TRANSPORTATION
RALEIGH

CONCRETE SILL DETALS

NORTH CAROLINA PROFESSIONAL SEAL 14047 ENGINEER STEPHEN D. COOK
8/23/13

THE LOUIS BERGER GROUP, Inc.
1001 Wade Avenue, Suite 400
Raleigh, NC 27605-3322

REVISIONS						SHEET NO.
NO.	BY:	DATE:	NO.	BY:	DATE:	C-5
1			3			TOTAL SHEETS
2			4			8

DRAWN BY : R. KNIGHT DATE : JUNE 2012
CHECKED BY : S. COOK DATE : JUNE 2012

G:\OR Projects\OR1100 - NCDOT Group W\430165\Structures\430165_STR_RCBC05.dgn
8/2/2013 1100_PDF_half.pltcfg 1100_str.tbl

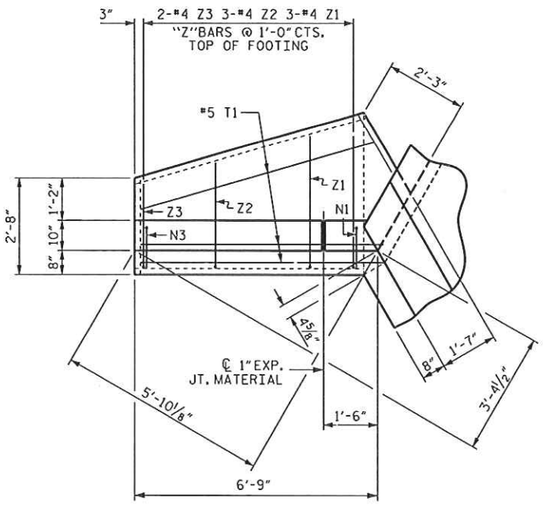

PLAN W2

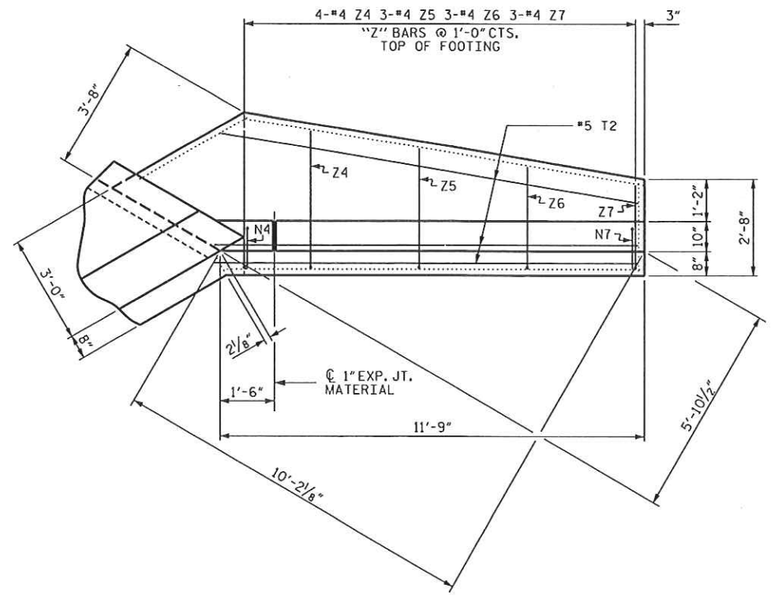

PLAN W1

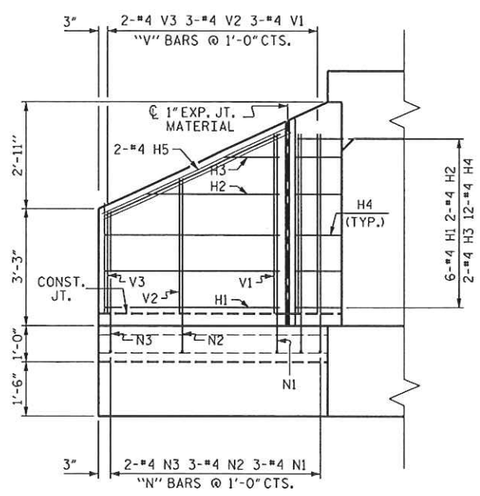

ELEVATION W2

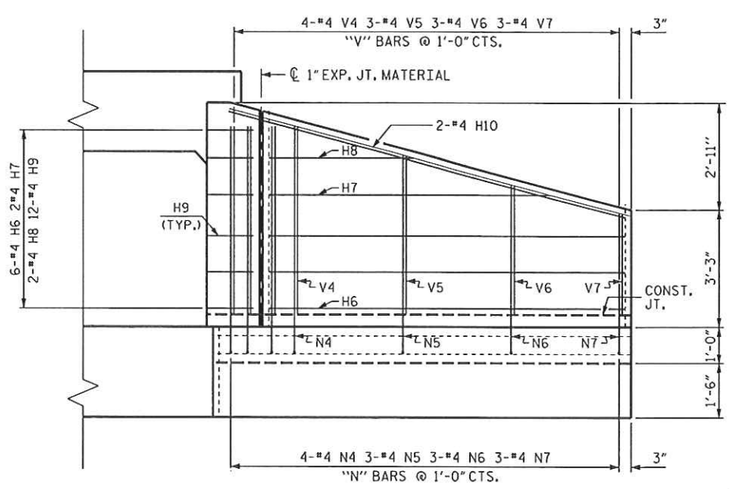

ELEVATION W1

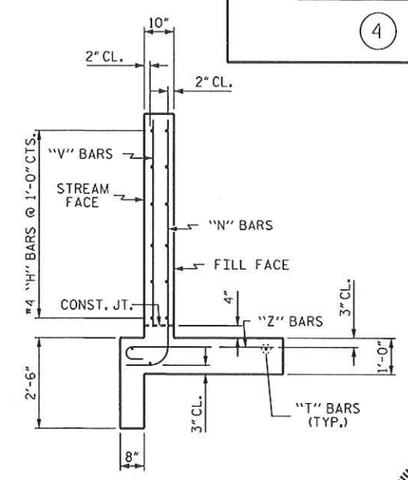

TYPICAL WING SECTION

BAR TYPES

ALL BAR DIMENSIONS ARE OUT TO OUT.

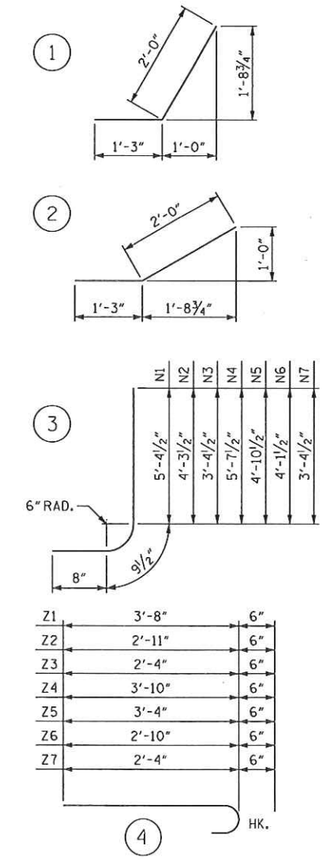

BILL OF MATERIAL

BAR	NO.	SIZE	TYPE	LENGTH	WEIGHT
H1	6	#4	STR	4'-10"	19
H2	2	#4	STR	4'-0"	5
H3	2	#4	STR	1'-9"	2
H4	12	#4	1	3'-3"	26
H5	2	#4	STR	5'-3"	7
H6	6	#4	STR	9'-10"	39
H7	2	#4	STR	8'-4"	11
H8	2	#4	STR	4'-3"	6
H9	12	#4	2	3'-3"	26
H10	2	#4	STR	10'-2"	14
N1	3	#4	3	6'-10"	14
N2	3	#4	3	5'-9"	12
N3	2	#4	3	4'-10"	6
N4	4	#4	3	7'-1"	19
N5	3	#4	3	6'-4"	13
N6	3	#4	3	5'-7"	11
N7	3	#4	3	4'-10"	10
T1	3	#5	STR	6'-9"	21
T2	3	#5	STR	11'-9"	37
V1	3	#4	STR	4'-9"	10
V2	3	#4	STR	3'-8"	7
V3	2	#4	STR	2'-10"	4
V4	4	#4	STR	5'-0"	13
V5	3	#4	STR	4'-3"	9
V6	3	#4	STR	3'-6"	7
V7	3	#4	STR	2'-10"	6
Z1	3	#4	4	4'-2"	8
Z2	3	#4	4	3'-4"	7
Z3	2	#4	4	2'-10"	4
Z4	4	#4	4	4'-4"	12
Z5	3	#4	4	4'-0"	8
Z6	3	#4	4	3'-4"	7
Z7	3	#4	4	2'-10"	6

REINFORCING STEEL
FOR 2 WINGS 406 LBS

CLASS A CONCRETE
2 WINGS 6.1 CY
1 HEADWALLS 1.0 CY
1 END CURTAIN WALLS 1.4 CY
TOTAL 8.5 CY

NOTE:
QUANTITIES ARE FOR STAGE 1.
STAGE 2 SIMILAR.

PROJECT NO. 17BP.14.R.27
HAYWOOD COUNTY
STATION: 13+22.20 -L-

SHEET 6 OF 8

STATE OF NORTH CAROLINA
DEPARTMENT OF TRANSPORTATION
RALEIGH

STANDARD WINGS FOR CONCRETE BOX CULVERT

H = 5'-0" SLOPE = 2:1
120° SKEW

NORTH CAROLINA PROFESSIONAL SEAL 14047 ENGINEER STEPHEN D. COX
4/23/13

THE LOUIS BERGER GROUP, Inc.
1001 Wade Avenue, Suite 400
Raleigh, NC 27605-3322

REVISIONS						SHEET NO.
NO.	BY:	DATE:	NO.	BY:	DATE:	C-6
1			3			TOTAL SHEETS
2			4			8

ASSEMBLED BY :	R. KNIGHT	DATE : APR. 2012
CHECKED BY :	R. COFFMAN	DATE : APR. 2012
DRAWN BY :	CCJ	11/99
CHECKED BY :	RWW	03/00

STD. NO. CW6005

G:\OR Projects\OR1100 - NCDOT Group W\430165\Structures\430165_STR_RCBC06.DGN
1100_PDF_half.pltcfg
8/2/2013

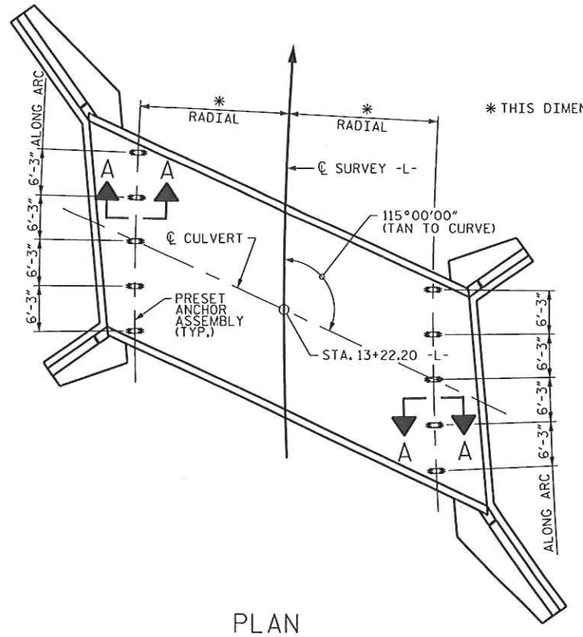

* THIS DIMENSION TO BE FURNISHED BY THE ENGINEER.

PLAN

SHOWING : GUARDRAIL ANCHOR ASSEMBLY SPACING.

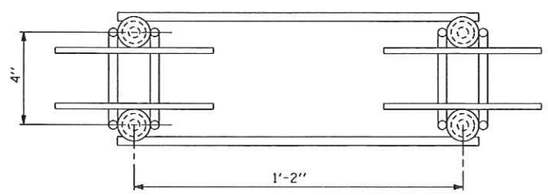

PLAN

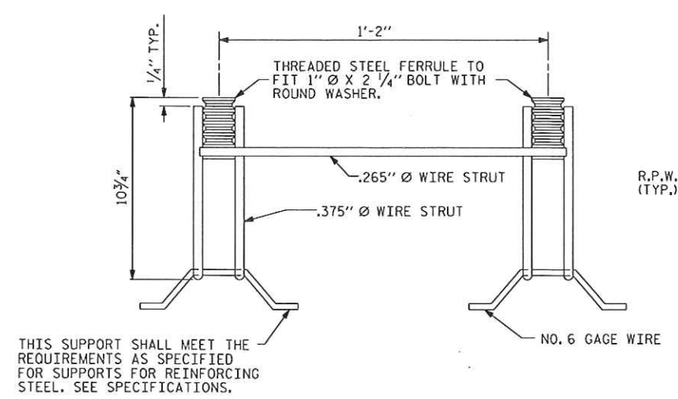

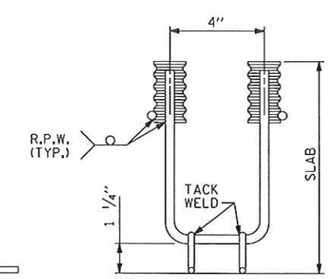

ELEVATION

GUARDRAIL ANCHOR ASSEMBLY FOR CULVERTS

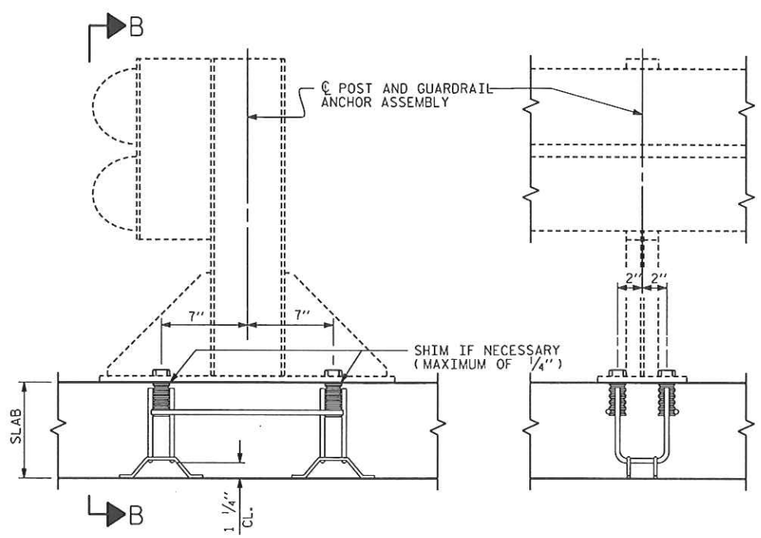

SECTION A-A

SECTION B-B

NOTES

THE GUARDRAIL ANCHOR ASSEMBLY FOR CULVERTS SHALL CONSIST OF THE FOLLOWING COMPONENTS :

A. FERRULES SHALL BE MADE FROM STEEL MEETING THE REQUIREMENTS OF AASHTO M169, GRADE 12L14 AND SHALL HAVE A MINIMUM LENGTH OF THREADS OF 2 1/2".

B. 4 - 1" Ø X 2 1/4" BOLTS WITH WASHERS, BOLTS SHALL CONFORM TO THE REQUIREMENTS OF ASTM A307. BOLTS AND WASHERS SHALL BE GALVANIZED. (AT THE CONTRACTOR'S OPTION, STAINLESS STEEL BOLTS AND WASHERS MAY BE USED AS AN ALTERNATE FOR THE 1" Ø X 2 1/4" GALVANIZED BOLTS AND WASHERS. THEY SHALL CONFORM TO OR EXCEED THE MECHANICAL REQUIREMENTS OF ASTM A307. THE USE OF THIS ALTERNATE SHALL BE APPROVED BY THE ENGINEER.)

C. WIRE STRUTS SHOWN IN THE GUARDRAIL ANCHOR ASSEMBLY FOR CULVERTS DETAIL ARE MINIMUM ALLOWABLE SIZE AND SHALL HAVE A MINIMUM TENSILE STRENGTH OF 100,000 P.S.I. AS AN OPTION, A 7/16" Ø WIRE STRUT WITH A MINIMUM TENSILE STRENGTH OF 90,000 PSI IS ACCEPTABLE.

GUARDRAIL ANCHOR ASSEMBLY WITH BOLTS SHALL BE ASSEMBLED IN THE SHOP. BOLT THREADS MAY BE RECUT AS NECESSARY TO INSURE FIT.

THE COST OF THE GUARDRAIL ANCHOR ASSEMBLY FOR CULVERTS COMPLETE IN PLACE, SHALL BE INCLUDED IN THE UNIT CONTRACT PRICE BID FOR CLASS "A" CONCRETE.

FERRULES TO BE PLUGGED DURING POURING OF SLAB AS RECOMMENDED BY THE MANUFACTURER.

AT THE CONTRACTOR'S OPTION, FERRULES WITH OPEN OR CLOSED ENDS MAY BE USED.

PAYMENT FOR GUARDRAIL, POSTS, AND POST BASE PLATES IS INCLUDED IN ROADWAY PAY ITEMS.

SLAB REINFORCING STEEL MAY BE SHIFTED AS NECESSARY TO CLEAR GUARDRAIL ANCHOR ASSEMBLY. CARE SHOULD BE TAKEN TO KEEP THE SHIFTING OF REINFORCING STEEL TO A MINIMUM.

THE CONTRACTOR MAY USE ADHESIVELY ANCHORED ANCHOR BOLTS IN PLACE OF GUARDRAIL ANCHOR ASSEMBLY. LEVEL TWO FIELD TESTING IS REQUIRED, AND THE YIELD LOAD OF THE 1" Ø BOLT IS 21.8 KIPS. FOR ADHESIVELY ANCHORED ANCHOR BOLTS OR DOWELS, SEE STANDARD SPECIFICATIONS.

PROJECT NO. 17BP.14.R.27
HAYWOOD COUNTY
STATION: 13+22.20 -L-

SHEET 7 OF 8

STATE OF NORTH CAROLINA
DEPARTMENT OF TRANSPORTATION
RALEIGH

STANDARD

ANCHORAGE DETAILS FOR GUARDRAIL ANCHOR ASSEMBLY FOR CULVERTS

NORTH CAROLINA PROFESSIONAL SEAL 14047 ENGINEER STEPHEN D. COX
8/23/13

THE LOUIS BERGER GROUP, Inc.
1001 Wade Avenue, Suite 400
Raleigh, NC 27605-3322

REVISIONS							SHEET NO.
NO.	BY:	DATE:	NO.	BY:	DATE:		C-7
1			3				TOTAL SHEETS
2			4				8

ASSEMBLED BY : R. KNIGHT		DATE : MAR. 2012	
CHECKED BY : R. COFFMAN		DATE : APR. 2012	
DRAWN BY : FCJ 6/88	REV. 7/10/01	LES/RDR	
CHECKED BY : ARB 6/88	REV. 5/7/03	RWW/JTE	
	REV. 5/1/06R	KMM/GM	

STD. NO. GRA1

G:\OR Projects\OR1100 - NCDOT Group W\430165\Structures\430165_STR_RCBC07.dgn
8/2/2013 7:55:56 AM 1100_PDF_half.pltcfg 1100_str.tbl

LOAD AND RESISTANCE FACTOR RATING (LRFR) SUMMARY FOR REINFORCED CONCRETE BOX CULVERTS

LEVEL		VEHICLE	WEIGHT (W) (TONS)	CONTROLLING LOAD RATING (#)	MINIMUM RATING FACTORS (RF)	TONS = W x RF	STRENGTH I LIMIT STATE									COMMENT NUMBER
							LIVE-LOAD FACTORS (γ_{LL})	MOMENT				SHEAR				
								RATING FACTOR	BOX NO.	ELEMENT TYPE	DISTANCE FROM LEFT END OF ELEMENT (ft)	RATING FACTOR	BOX NO.	ELEMENT TYPE	DISTANCE FROM LEFT END OF ELEMENT (ft)	
DESIGN LOAD RATING		HL-93 (INVENTORY)	N/A	1	1.01	--	1.75	2.58	2	TOP SLAB	18.00	1.01	2	TOP SLAB	18.00	
		HL-93 (OPERATING)	N/A		1.31	--	1.35	3.35	2	TOP SLAB	18.00	1.31	2	TOP SLAB	18.00	
		HS-20 (INVENTORY)	36.000	2	1.28	46.08	1.75	3.46	2	TOP SLAB	18.00	1.28	2	TOP SLAB	18.00	
		HS-20 (OPERATING)	36.000		1.65	59.40	1.35	4.48	2	TOP SLAB	18.00	1.65	2	TOP SLAB	18.00	
LEGAL LOAD RATING	SINGLE VEHICLE (SV)	SNSH	13.500		2.31	31.19	1.40	6.29	2	TOP SLAB	18.00	2.31	2	TOP SLAB	18.00	
		SNGARBS2	20.000		2.16	43.20	1.40	5.89	2	TOP SLAB	18.00	2.16	2	TOP SLAB	18.00	
		SNAGRIS2	22.000		2.31	50.82	1.40	6.29	2	TOP SLAB	18.00	2.31	2	TOP SLAB	18.00	
		SNCOTTS3	27.250	3	1.40	38.15	1.40	3.73	2	TOP SLAB	18.00	1.40	2	TOP SLAB	18.00	
		SNAGGRS4	34.925		1.68	58.67	1.40	3.76	2	TOP SLAB	18.00	1.68	2	TOP SLAB	18.00	
		SNS5A	35.550		1.55	55.10	1.40	3.66	2	TOP SLAB	18.00	1.55	2	TOP SLAB	18.00	
		SNS6A	39.950		1.52	60.72	1.40	3.55	2	TOP SLAB	18.00	1.52	2	TOP SLAB	18.00	
		SNS7B	42.000		1.52	63.84	1.40	3.55	2	TOP SLAB	18.00	1.52	2	TOP SLAB	18.00	
	TRUCK TRACTOR SEMI-TRAILER (TTST)	TNAGRIT3	33.000		2.10	69.30	1.40	4.21	2	TOP SLAB	18.00	2.10	2	TOP SLAB	18.00	
		TNT4A	33.075		1.63	53.91	1.40	4.02	2	TOP SLAB	18.00	1.63	2	TOP SLAB	18.00	
		TNT6A	41.600		1.60	66.56	1.40	3.90	2	TOP SLAB	18.00	1.60	2	TOP SLAB	18.00	
		TNT7A	42.000		1.60	67.20	1.40	4.05	2	TOP SLAB	18.00	1.60	2	TOP SLAB	18.00	
		TNT7B	42.000		1.53	64.26	1.40	3.56	2	TOP SLAB	18.00	1.53	2	TOP SLAB	18.00	
		TNAGRIT4	43.000		1.58	67.94	1.40	3.67	2	TOP SLAB	18.00	1.58	2	TOP SLAB	18.00	
		TNAGT5A	45.000		1.56	70.20	1.40	3.67	2	TOP SLAB	18.00	1.56	2	TOP SLAB	18.00	
		TNAGT5B	45.000		1.56	70.20	1.40	3.70	2	TOP SLAB	18.00	1.56	2	TOP SLAB	18.00	

LOAD FACTORS:

DESIGN LOAD RATING FACTORS

LOAD TYPE	MAX FACTOR	MIN FACTOR
DC	1.25	0.90
DW	1.50	0.65
EV	1.30	0.90
EH	1.35	0.90
ES	1.35	0.90
LS	1.75	--
WA	1.00	--

NOTE:

RATING FACTORS ARE BASED ON THE STRENGTH I LIMIT STATE.

COMMENTS:

1.
2.
3.
4.

(#) CONTROLLING LOAD RATING

(1) DESIGN LOAD RATING (HL-93)

(2) DESIGN LOAD RATING (HS-20)

(3) LEGAL LOAD RATING **

** SEE CHART FOR VEHICLE TYPE

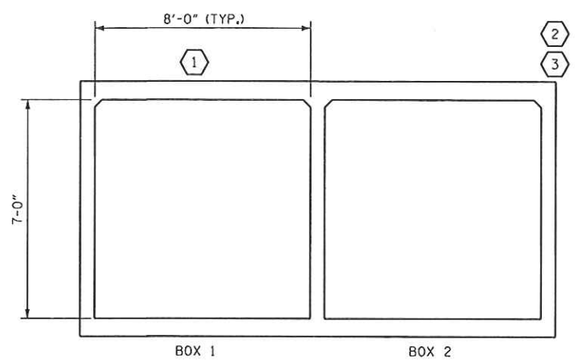

LRFR SUMMARY

(LOOKING DOWNSTREAM)

PROJECT NO. 17BP.14.R.27

HAYWOOD COUNTY

STATION: 13+22.20 -L-

SHEET 8 OF 8

STATE OF NORTH CAROLINA
DEPARTMENT OF TRANSPORTATION
RALEIGH

STANDARD

LRFR SUMMARY FOR REINFORCED CONCRETE BOX CULVERTS (NON-INTERSTATE TRAFFIC)

NORTH CAROLINA PROFESSIONAL SEAL 14047 ENGINEER STEPHEN D. COOK
8/23/13

THE LOUIS BERGER GROUP, Inc.
1001 Wade Avenue, Suite 400
Raleigh, NC 27605-3322

REVISIONS						SHEET NO.
NO.	BY:	DATE:	NO.	BY:	DATE:	C-8
1			3			TOTAL SHEETS
2			4			8

STD. NO. LRFR5

ASSEMBLED BY : R. KNIGHT		DATE : APR. 2012	
CHECKED BY : R. COFFMAN		DATE : APR. 2012	
DRAWN BY : WMC	7/11	REV. 10/1/11	MAA/GM
CHECKED BY : GM	7/11		

G:\OR Projects\OR1100 - NCDOT Group W\430165\Structures\430165_STR_RCBC08.dgn
8/2/2013 7:55:58 AM 1100_PDF_half.pltcfg 1100_str.tbl