TIP PROJECT: BD-5114O

CONTRACT: DN00082

STATE OF NORTH CAROLINA
DIVISION OF HIGHWAYS

TRANSYLVANIA COUNTY

STATE	STATE PROJECT REFERENCE NO.	SHEET NO.	TOTAL SHEETS
N.C.	BD-5114O	1	

STATE PROJ. NO.	F.A. PROJ. NO.	DESCRIPTION
45360.1.15	BRZ-1147(14)	P.E.
45360.2.15	BRZ-1147(14)	R/W
45360.3.15	BRZ-1147(14)	CONST.

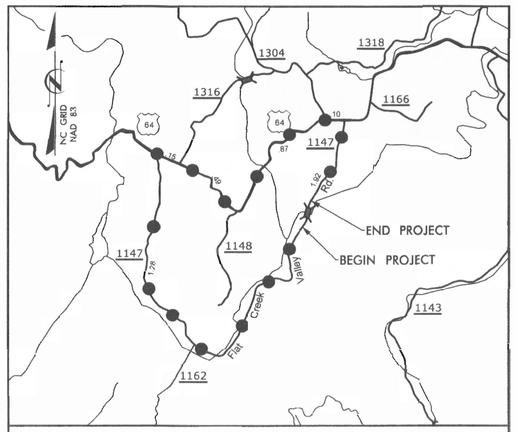

VICINITY MAP

DETOUR ROUTE

LOCATION: BRIDGE NO. 130 OVER SOUTH FORK FLAT CREEK ON SR 1147 (FLAT CREEK VALLEY RD.)

TYPE OF WORK: GRADING, DRAINAGE, PAVING, AND STRUCTURE

4

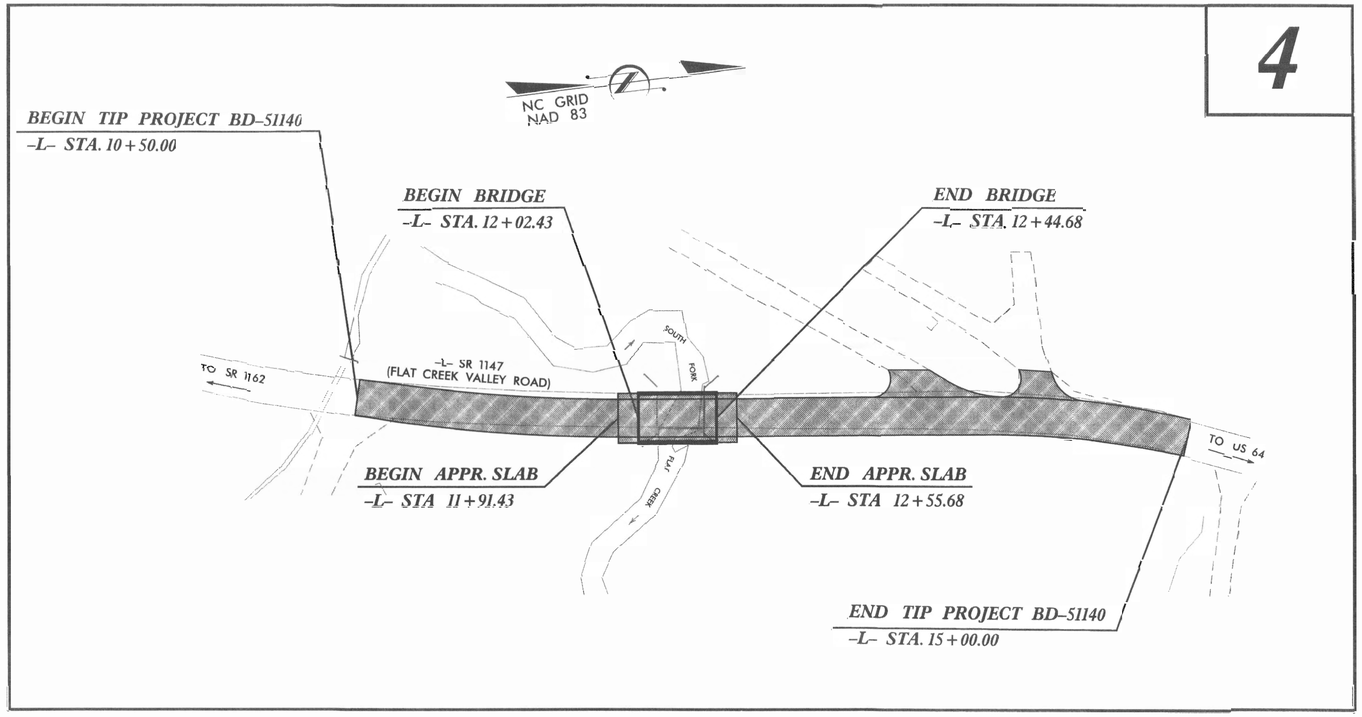

V&M
Vaughn & Melton
Consulting Engineers
Asheville, North Carolina 828-253-2796
Charlotte, North Carolina 704-357-8485
Tri-Cities, Tennessee 423-467-8467
Knoxville, Tennessee 865-546-1850
Middlesboro, Kentucky 606-248-1400
Spartanburg, South Carolina 864-574-4775

Copyright © 1994 Vaughn & Melton, Inc. All Rights Reserved

GRAPHIC SCALES

20 10 0 20 40 — PLANS

20 10 0 20 40 — PROFILE (HORIZONTAL)

4 2 0 4 8 — PROFILE (VERTICAL)

DESIGN DATA

ADT 2009 = 360
ADT 2025 = 720

T = 6 %
V = 45 MPH

FUNC CLASS = LOCAL

PROJECT LENGTH

LENGTH ROADWAY TIP PROJECT BD-5114O = 0.077 MI.
LENGTH STRUCTURE TIP PROJECT BD-5114O = 0.008 MI.
TOTAL LENGTH OF TIP PROJECT BD-5114O = 0.085 MI.

Prepared In the Office of:
VAUGHN & MELTON
1318-F PATTON AVE.
ASHEVILLE NC, 28806
FOR THE NORTH CAROLINA DIVISION OF HIGHWAYS

2012 STANDARD SPECIFICATIONS

RIGHT OF WAY DATE:
NOVEMBER 23, 2011

LETTING DATE:
SEPTEMBER 25, 2012

HARDY WILLIS, PE
PROJECT ENGINEER

AARON CARVER, PE
PROJECT DESIGN ENGINEER

NCDOT CONTACT:
JOSH DEYTON, PE
PROJECT ENGINEER - ROADWAY DESIGN

HYDRAULICS ENGINEER

NORTH CAROLINA PROFESSIONAL SEAL 033023 ENGINEER BRADLEY S. RIDNOUR

8-14-12
Bradley S Ridnour, P.E.
SIGNATURE: P.E.

ROADWAY DESIGN ENGINEER

NORTH CAROLINA PROFESSIONAL SEAL 030453 ENGINEER AARON C. CARVER

8/14/12
SIGNATURE: P.E.

DIVISION OF HIGHWAYS
STATE OF NORTH CAROLINA

STATE OF NORTH CAROLINA · DEPARTMENT OF TRANSPORTATION

$$$$SYSTIME$$$$
$$$$USERNAME$$$$
$$$$DGN$$$$

PROJECT REFERENCE NO.	SHEET NO.
BD-5130	1-A

ROADWAY DESIGN ENGINEER

NORTH CAROLINA PROFESSIONAL SEAL 030453 ENGINEER AARON C. CARTER

8/7/12

INDEX OF SHEETS

SHEET NUMBER	SHEET
1	TITLE SHEET
1-A	INDEX OF SHEETS, GENERAL NOTES, AND LIST OF STANDARD DRAWINGS
1-B	CONVENTIONAL SYMBOLS
1-C	SURVEY CONTROL SHEET
2	PAVEMENT SCHEDULE AND TYPICAL SECTIONS
3	SUMMARY OF QUANTITIES
3A	SUMMARY OF DRAINAGE QUANTITIES, SUMMARY OF GUARDRAIL, AND ASPHALT PAVEMENT REMOVAL SUMMARY
3B	EARTHWORK SUMMARY
4	PLAN AND PROFILE SHEET
TMP-1 THRU TMP-2	TRAFFIC MANAGEMENT PLANS
SD-1	SPECIAL SIGN DETAIL
EC-1 THRU EC-3	EROSION CONTROL PLANS
UO-1 THRU UO-2	UTILITIES BY OTHERS PLANS
X-0	CROSS-SECTION SUMMARY
X-1 THRU X-3	CROSS-SECTIONS
S-1 THRU S-13	STRUCTURE PLANS

GENERAL NOTES:

2012 SPECIFICATIONS
EFFECTIVE: 01-17-2012

GRADE LINE:
GRADING AND SURFACING OR RESURFACING AND WIDENING:

THE GRADE LINES SHOWN DENOTE THE FINISHED ELEVATION OF THE PROPOSED SURFACING AT GRADE POINTS SHOWN ON THE TYPICAL SECTIONS. WHERE NO GRADE LINES ARE SHOWN, THE PROFILES SHOWN DENOTE THE TOP ELEVATION OF THE EXISTING PAVEMENT ALONG THE CENTER LINE OF SURVEY ON WHICH THE PROPOSED RESURFACING WILL BE PLACED. GRADE LINES MAY BE ADJUSTED BY THE ENGINEER IN ORDER TO SECURE A PROPER TIE-IN.

CLEARING:

CLEARING ON THIS PROJECT SHALL BE PERFORMED TO THE LIMITS ESTABLISHED BY METHOD II.

SUPERELEVATION:

ALL CURVES ON THIS PROJECT SHALL BE SUPERELEVATED IN ACCORDANCE WITH STD. NO. 225.04 USING THE RATE OF SUPERELEVATION AND RUNOFF SHOWN ON THE PLANS. SUPERELEVATION IS TO BE REVOLVED ABOUT THE GRADE POINTS SHOWN ON THE TYPICAL SECTIONS.

SHOULDER CONSTRUCTION:

ASPHALT, EARTH, AND CONCRETE SHOULDER CONSTRUCTION ON THE HIGH SIDE OF SUPERELEVATED CURVES SHALL BE IN ACCORDANCE WITH STD. NO. 560.01.

UNDERDRAINS:

UNDERDRAINS SHALL BE CONSTRUCTED IN ACCORDANCE WITH STD. NO. 815.03 AT LOCATIONS DIRECTED BY THE ENGINEER.

GUARDRAIL:

THE GUARDRAIL LOCATIONS SHOWN ON THE PLANS MAY BE ADJUSTED DURING CONSTRUCTION AS DIRECTED BY THE ENGINEER. THE CONTRACTOR SHOULD CONSULT WITH THE ENGINEER PRIOR TO ORDERING GUARDRAIL MATERIAL.

TEMPORARY SHORING:

SHORING REQUIRED FOR THE MAINTENANCE OF TRAFFIC WILL BE PAID FOR AS "EXTRA WORK" IN ACCORDANCE WITH SECTION 104-7.

SUBSURFACE PLANS:

NO SUBSURFACE PLANS ARE AVAILABLE ON THIS PROJECT. THE CONTRACTOR SHOULD MAKE HIS OWN INVESTIGATION AS TO THE SUBSURFACE CONDITIONS.

END BENTS:

THE ENGINEER SHALL CHECK THE STRUCTURE END BENT PLANS, DETAILS, AND CROSS-SECTION PRIOR TO SETTING OF THE SLOPE STAKES FOR THE EMBANKMENT OR EXCAVATION APPROACHING A BRIDGE.

UTILITIES:

UTILITY OWNERS ON THIS PROJECT ARE:

POWER DISTRIBUTION- HAYWOOD EMC
TELECOMMUNICATIONS- COMPORIUM

RIGHT-OF-WAY MARKERS:

ALL RIGHT-OF-WAY MARKERS ON THIS PROJECT SHALL BE PLACED BY OTHERS.

2012 ROADWAY ENGLISH STANDARD DRAWINGS

The following Roadway Standards as appear in "Roadway Standard Drawings" Highway Design Branch - N. C. Department of Transportation - Raleigh, N. C., Dated January 17, 2012 are applicable to this project and by reference hereby are considered a part of these plans:

STD.NO.	TITLE
DIVISION 2 - EARTHWORK	
200.02	Method of Clearing - Method II
225.02	Guide for Grading Subgrade - Secondary and Local
225.04	Method of Obtaining Superelevation - Two Lane Pavement
DIVISION 3 - PIPE CULVERTS	
300.01	Method of Pipe Installation - Method 'A'
DIVISION 4 - MAJOR STRUCTURES	
422.11	Bridge Approach Fills
DIVISION 5 - SUBGRADE, BASES AND SHOULDERS	
560.01	Method of Shoulder Construction - High Side Of Superelevated Curve - Method I
DIVISION 8 - INCIDENTALS	
815.03	Pipe Underdrain and Blind Drain
840.25	Anchorage For Frames
840.29	Frames and Narrow Slot Flat Grates
840.35	Traffic Bearing Grated Drop Inlet - for Cast Iron Double Frame and Grates
840.46	Traffic Bearing Precast Drainage Structure
840.66	Drainage Structure Steps
846.01	Concrete Curb, Gutter and Curb & Gutter
846.04	Drop Inlet Installation in Shoulder Berm Gutter
862.01	Guardrail Placement
862.02	Guardrail Installation
862.03	Structure Anchor Units
876.02	Guide for Rip Rap at Pipe Outlets

3/15/05

PROJECT REFERENCE NO.	SHEET NO.
BD-5114O	1-B

Note: Not to Scale

****S.U.E. = Subsurface Utility Engineering***

STATE OF NORTH CAROLINA
DIVISION OF HIGHWAYS

CONVENTIONAL PLAN SHEET SYMBOLS

BOUNDARIES AND PROPERTY:

- State Line
- County Line
- Township Line
- City Line
- Reservation Line
- Property Line
- Existing Iron Pin — EIP
- Property Corner
- Property Monument — ECM
- Parcel/Sequence Number — 123
- Existing Fence Line
- Proposed Woven Wire Fence
- Proposed Chain Link Fence
- Proposed Barbed Wire Fence
- Existing Wetland Boundary — WLB
- Proposed Wetland Boundary — WLB
- Existing Endangered Animal Boundary — EAB
- Existing Endangered Plant Boundary — EPB

BUILDINGS AND OTHER CULTURE:

- Gas Pump Vent or U/G Tank Cap
- Sign — S
- Well — W
- Small Mine
- Foundation
- Area Outline
- Cemetery
- Building
- School
- Church
- Dam

HYDROLOGY:

- Stream or Body of Water
- Hydro, Pool or Reservoir
- Jurisdictional Stream — JS
- Buffer Zone 1 — BZ 1
- Buffer Zone 2 — BZ 2
- Flow Arrow
- Disappearing Stream
- Spring
- Swamp Marsh
- Proposed Lateral, Tail, Head Ditch — FLOW
- False Sump

RAILROADS:

- Standard Gauge — CSX TRANSPORTATION
- RR Signal Milepost — MILEPOST 35
- Switch — SWITCH
- RR Abandoned
- RR Dismantled

RIGHT OF WAY:

- Baseline Control Point
- Existing Right of Way Marker
- Existing Right of Way Line
- Proposed Right of Way Line — RW
- Proposed Right of Way Line with Iron Pin and Cap Marker — RW
- Proposed Right of Way Line with Concrete or Granite Marker — RW
- Existing Control of Access — CA
- Proposed Control of Access — CA
- Existing Easement Line — E
- Proposed Temporary Construction Easement — E
- Proposed Temporary Drainage Easement — TDE
- Proposed Permanent Drainage Easement — PDE
- Proposed Permanent Utility Easement — PUE

ROADS AND RELATED FEATURES:

- Existing Edge of Pavement
- Existing Curb
- Proposed Slope Stakes Cut — C
- Proposed Slope Stakes Fill — F
- Proposed Wheel Chair Ramp — WCR
- Proposed Wheel Chair Ramp Curb Cut — WCC
- Curb Cut for Future Wheel Chair Ramp — CCFR
- Existing Metal Guardrail
- Proposed Guardrail
- Existing Cable Guiderail
- Proposed Cable Guiderail
- Equality Symbol
- Pavement Removal

VEGETATION:

- Single Tree
- Single Shrub
- Hedge
- Woods Line
- Orchard
- Vineyard — Vineyard

EXISTING STRUCTURES:

MAJOR:

- Bridge, Tunnel or Box Culvert — CONC
- Bridge Wing Wall, Head Wall and End Wall — CONC WW

MINOR:

- Head and End Wall — CONC HW
- Pipe Culvert
- Footbridge
- Drainage Box: Catch Basin, DI or JB — CB
- Paved Ditch Gutter
- Storm Sewer Manhole — S
- Storm Sewer — S

UTILITIES:

POWER:

- Existing Power Pole
- Proposed Power Pole
- Existing Joint Use Pole
- Proposed Joint Use Pole
- Power Manhole — P
- Power Line Tower
- Power Transformer
- U/G Power Cable Hand Hole — HH
- H-Frame Pole
- Recorded U/G Power Line — P
- Designated U/G Power Line (S.U.E.*) — P

TELEPHONE:

- Existing Telephone Pole
- Proposed Telephone Pole
- Telephone Manhole — T
- Telephone Booth
- Telephone Pedestal — T
- Telephone Cell Tower
- U/G Telephone Cable Hand Hole — HH
- Recorded U/G Telephone Cable — T
- Designated U/G Telephone Cable (S.U.E.*) — T
- Recorded U/G Telephone Conduit — TC
- Designated U/G Telephone Conduit (S.U.E.*) — TC
- Recorded U/G Fiber Optics Cable — T FO
- Designated U/G Fiber Optics Cable (S.U.E.*) — T FO

WATER:

- Water Manhole — W
- Water Meter
- Water Valve
- Water Hydrant
- Recorded U/G Water Line — W
- Designated U/G Water Line (S.U.E.*) — W
- Above Ground Water Line — A/G Water

TV:

- TV Satellite Dish
- TV Pedestal — C
- TV Tower
- U/G TV Cable Hand Hole — HH
- Recorded U/G TV Cable — TV
- Designated U/G TV Cable (S.U.E.*) — TV
- Recorded U/G Fiber Optic Cable — TV FO
- Designated U/G Fiber Optic Cable (S.U.E.*) — TV FO

GAS:

- Gas Valve
- Gas Meter
- Recorded U/G Gas Line — G
- Designated U/G Gas Line (S.U.E.*) — G
- Above Ground Gas Line — A/G Gas

SANITARY SEWER:

- Sanitary Sewer Manhole
- Sanitary Sewer Cleanout
- U/G Sanitary Sewer Line — SS
- Above Ground Sanitary Sewer — A/G Sanitary Sewer
- Recorded SS Forced Main Line — FSS
- Designated SS Forced Main Line (S.U.E.*) — FSS

MISCELLANEOUS:

- Utility Pole
- Utility Pole with Base
- Utility Located Object
- Utility Traffic Signal Box — S
- Utility Unknown U/G Line — ?UTL
- U/G Tank; Water, Gas, Oil
- A/G Tank; Water, Gas, Oil
- U/G Test Hole (S.U.E.*)
- Abandoned According to Utility Records — AATUR
- End of Information — E.O.I.

6/2/99

SURVEY CONTROL SHEET BD–5114O

BL

POINT	DESC.	NORTH	EAST	ELEVATION	L STATION	OFFSET
1	BL-1	521351.6560	835859.0670	2677.12	OUTSIDE PROJECT LIMITS	
2	BL-2	521655.5200	835949.9010	2668.82	11+83.25	8.66 RT
3	BL-3	521957.0957	835970.6180	2672.63	14+82.86	14.71 LT

****
BM1 ELEVATION = 2671.61
N 521746 E 835980
L STATION 12+77.00 28 RIGHT
RR SPIKE
****

FINAL PROPOSED RIGHT OF WAY MONUMENT PSD

ALIGN	STATION	OFFSET	NORTH	EAST
L	10+50.43	30.00	521519.1577	835943.1597
L	10+73.36	30.00	521541.3402	835948.9831
L	12+00.87	30.00	521670.7267	835973.3145
L	13+91.23	30.00	521859.7255	835995.5194
L	14+52.31	29.08	521916.4197	836004.7918
L	14+54.58	30.00	521918.2707	836006.1900

FINAL -L-

TYPE	STATION	NORTH	EAST
POT	10+00.00	521478.0020	835901.3390
PC	10+73.36	521548.9536	835919.9652
PT	12+00.87	521674.1703	835943.5128
PC	13+91.23	521863.2305	835965.7249
PT	15+00.32	521969.3272	835990.1221

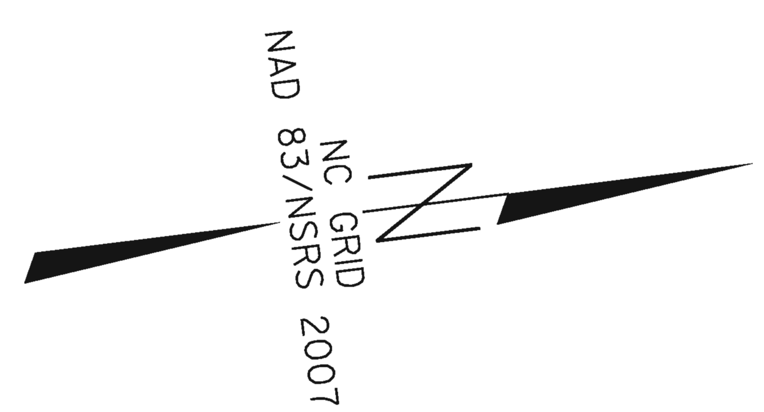

NCDOT BASELINE MONUMENT (BD–5114O BL–1)
LOCALIZED PROJECT COORDINATES
N=521,351.6560
E=835,859.0670
ELEV.=2,677.12'

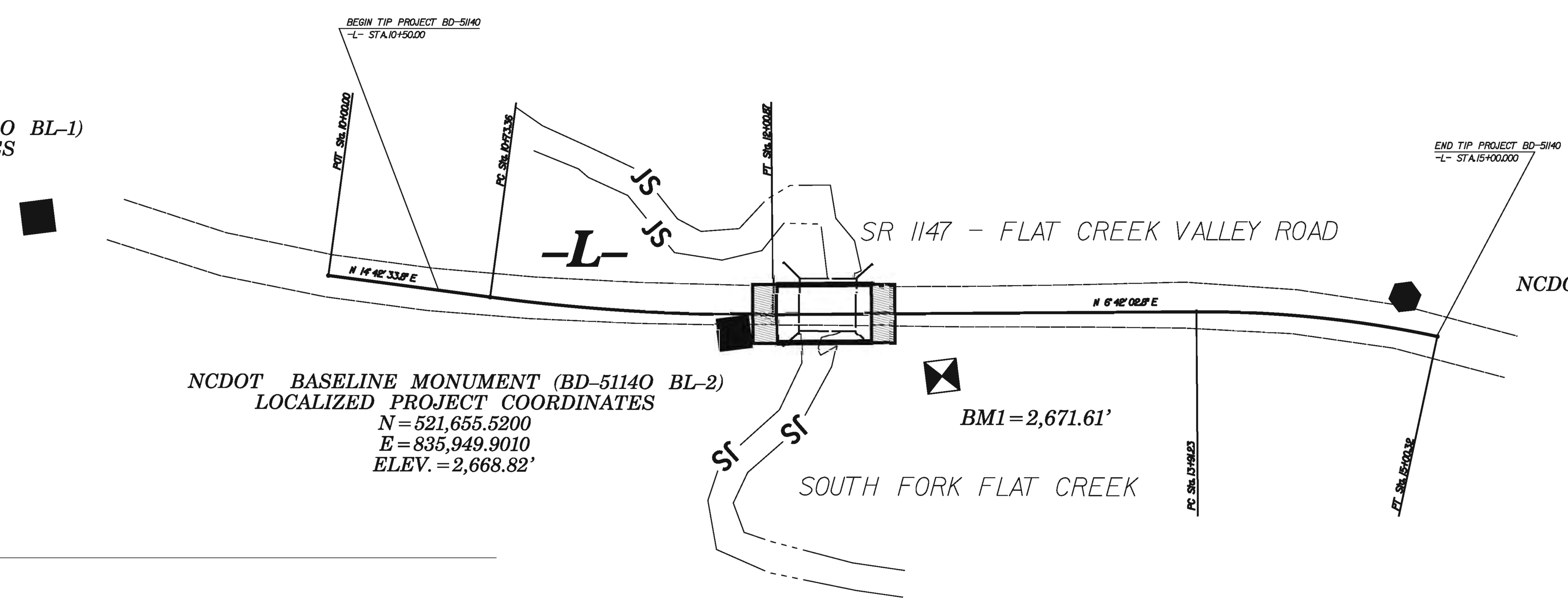

NCDOT BASELINE MONUMENT (BD–5114O BL–2)
LOCALIZED PROJECT COORDINATES
N=521,655.5200
E=835,949.9010
ELEV.=2,668.82'

NCDOT BASELINE MONUMENT (BD–5114O BL–3)
LOCALIZED PROJECT COORDINATES
N=521,957.0957
E=835,970.6180
ELEV.=2,672.63'

NOTES:

1. THE CONTROL DATA FOR THIS PROJECT CAN BE FOUND ELECTRONICALLY BY SELECTING PROJECT CONTROL DATA AT:
HTTP://WWW.NCDOT.ORG/DOH/PRECONSTRUCT/HIGHWAY/LOCATION/PROJECT/

THE FILES TO BE FOUND ARE AS FOLLOWS:
BD–5114O_LS_CONTROL_120502.TXT

SITE CALIBRATION INFORMATION HAS NOT BEEN PROVIDED FOR THIS PROJECT. IF FURTHER INFORMATION IS NEEDED, PLEASE CONTACT THE LOCATION AND SURVEYS UNIT.

⬢ INDICATES GEODETIC CONTROL MONUMENTS USED OR SET FOR HORIZONTAL PROJECT CONTROL BY THE NCDOT LOCATION AND SURVEYS UNIT.

PROJECT CONTROL ESTABLISHED USING GLOBAL POSITIONING SYSTEM.

NETWORK ESTABLISHED FROM NGS ONLINE POSITIONING SERVICE (OPUS)

NOTE: DRAWING NOT TO SCALE

DATUM DESCRIPTION

THE LOCALIZED COORDINATE SYSTEM DEVELOPED FOR THIS PROJECT IS BASED ON THE STATE PLANE COORDINATES ESTABLISHED BY NCDOT FOR MONUMENT "870130 BL-3" WITH NAD 83/NSRS 2007 STATE PLANE GRID COORDINATES OF NORTHING: 521957.0957(ft) EASTING: 835970.6180(ft) ELEVATION: 2672.63(ft)
THE AVERAGE COMBINED GRID FACTOR USED ON THIS PROJECT (GROUND TO GRID) IS: 0.99975172369
THE N.C. LAMBERT GRID BEARING AND LOCALIZED HORIZONTAL GROUND DISTANCE FROM "870130 BL-3" TO -L- STATION 10+00.00 IS S08°13'41"E 484.08'
ALL LINEAR DIMENSIONS ARE LOCALIZED HORIZONTAL DISTANCES
VERTICAL DATUM USED IS NAVD 88

$$$$$$SYSTIME$$$$
$$$$$$$$$DGN$$$$$$$$$$$$$$$$$$$$
$$$$$$USERNAME$$$$

PROJECT REFERENCE NO.	SHEET NO.
RD-5140	2
R/W SHEET NO.	
ROADWAY DESIGN ENGINEER	PAVEMENT DESIGN ENGINEER

NORTH CAROLINA PROFESSIONAL SEAL 030453 ENGINEER AARON C. CARVER 8/12/12

NORTH CAROLINA PROFESSIONAL SEAL 28134 ENGINEER ROBERT M. CRISP 8/12/12

USE TYPICAL SECTION NO. 1

-L- STA. 10+50.00 TO -L- STA. 11+50.00

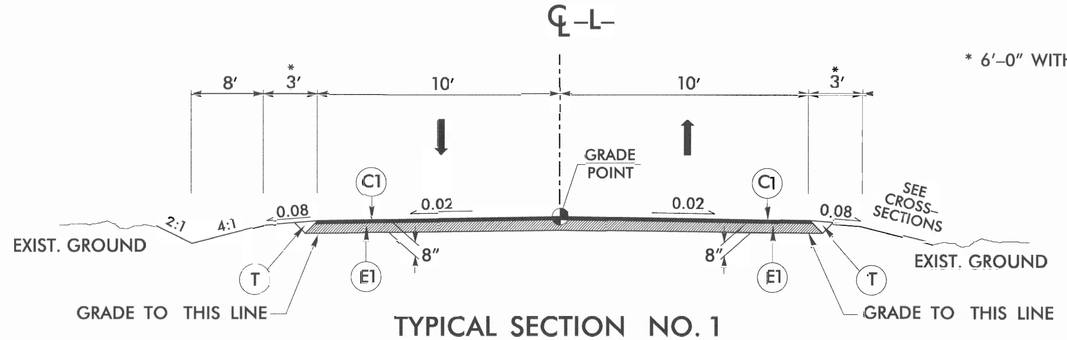

* 6'-0" WITH GUARDRAIL

TYPICAL SECTION NO. 1

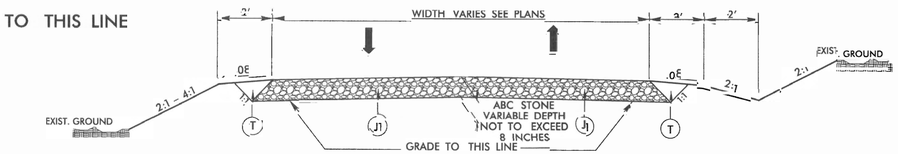

TYPICAL SECTION NO. 4

USE FOR ALL DRIVEWAY TIE INS

TYPICAL SECTION NO. 2

-L- STA. 11+50.00 TO 12+02.43 (BEGIN BRIDGE)
-L- STA. 12+44.68 (END BRIDGE) TO 15+00.00

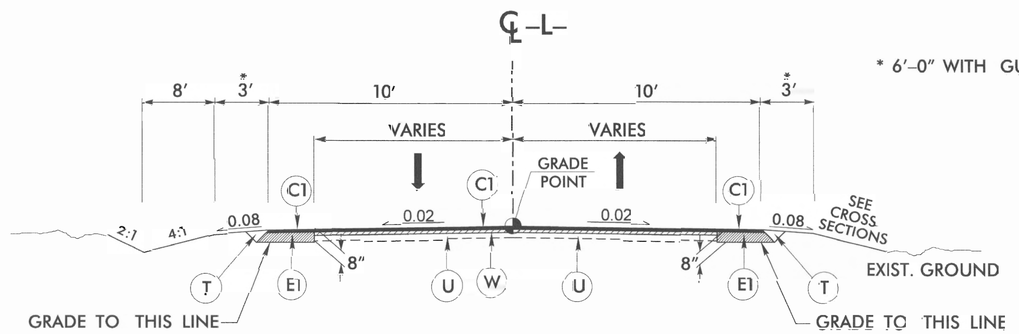

* 6'-0" WITH GUARDRAIL

TYPICAL SECTION NO. 2

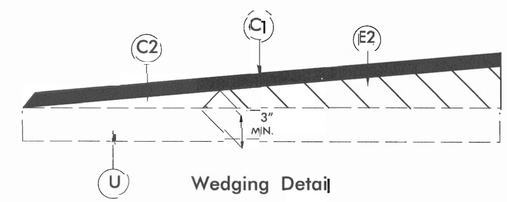

Wedging Detail

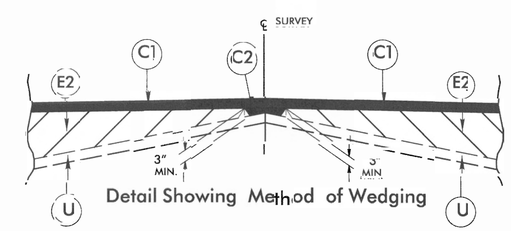

Detail Showing Method of Wedging

USE TYPICAL SECTION NO. 3

-L- STA. 12+02.43 (BEGIN BRIDGE) TO
-L- STA. 12+44.68 (END BRIDGE)

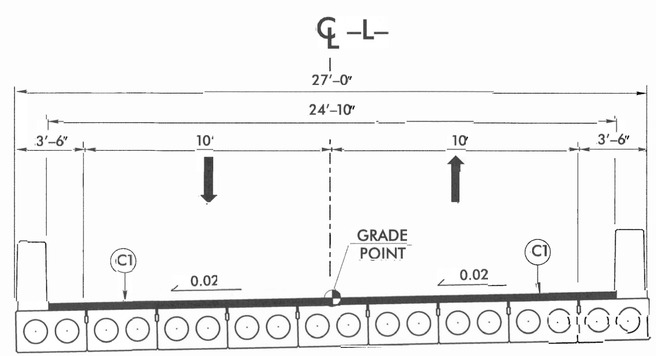

TYPICAL SECTION NO. 3

	PAVEMENT SCHEDULE
C1	PROP. APPROX. 3" ASPHALT CONCRETE SURFACE COURSE, TYPE S9.5B, AT AN AVERAGE RATE OF 168 LBS. PER SQ. YD. IN EACH OF TWO LAYERS.
C2	PROP. VAR. DEPTH ASPHALT CONCRETE SURFACE COURSE, TYPE S9.5B AT AN AVERAGE RATE OF 112 LBS. PER SQ. YD. PER 1" DEPTH. TO BE PLACED IN LAYERS NOT TO EXCEED 1½" IN DEPTH.
E1	PROP. APPROX. 5" ASPHALT CONCRETE BASE COURSE, TYPE B25.0B, AT AN AVERAGE RATE OF 570 LBS. PER SQ. YD.
E2	PROP. VAR. DEPTH ASPHALT CONCRETE BASE COURSE, TYPE B25.0B, AT AN AVERAGE RATE OF 114 LBS. PER SQ. YD. PER 1" DEPTH. TO BE PLACED IN LAYERS NOT LESS THAN 3" IN DEPTH OR GREATER THAN 5½" IN DEPTH.
J1	PROP. 8" MAX. AGGREGATE BASE COURSE.
T	EARTH MATERIAL
U	EXISTING PAVEMENT
W	PROPOSED WEDGING (SEE APPROPRIATE DETAILS)

NOTE: ALL PAVEMENT SLOPES ARE 1:1 UNLESS SHOWN OTHERWISE.

8/17/99

5/28/99

STATE OF NORTH CAROLINA
DIVISION OF HIGHWAYS

SUMMARY OF QUANTITIES

Line Item	Sec No.	Quantity	Unit	Description
0000100000-N	800	1	LS	Mobilization
0000400000-N	801	1	LS	Construction Surveying
0030000000-N	SP	1	LS	Reinforced Bridge Approach Fill - Sub Regional Tier
0043000000-N	226	1	LS	Grading
0057000000-E	226	50	CY	Undercut Excavation
0195000000-E	265	50	CY	Select Granular Material
0196000000-E	270	50	SY	Geotextile for Soil Stabilization
0318000000-E	300	10	Tons	Foundation Conditioning Material, Minor Strs
0335200000-E	305	12	LF	15" Drainage Pipe
0335300000-E	305	72	LF	18" Drainage Pipe
1099500000-E	505	100	CY	Shallow Undercut
1099700000-E	505	50	Tons	Class IV Subgrade Stabilization
1121000000-E	520	35	Tons	Aggregate Base Course
1220000000-E	545	50	Tons	Incidental Stone Base
1489000000-E	610	120	Tons	Asphalt Conc Base Course Type B25.0B
1519000000-E	610	180	Tons	Asphalt Conc Surface Course Type S9.5B
1575000000-E	620	20	Tons	Asphalt Binder for Plant Mix
2022000000-E	815	20	CY	Subdrain Excavation
2033000000-E	815	15	CY	Subdrain Fine Aggregate
2044000000-E	815	84	LF	6" Perforated Subdrain Pipe
2070000000-N	815	1	EA	Subdrain Pipe Outlet
2077000000-E	815	6	LF	6" Outlet Pipe (Subdrains)
2286000000-N	840	1	EA	Masonry Drainage Structures
2367000000-N	840	1	EA	Frame with Two Grates, STD 840.29
2556000000-E	846	12	LF	Shoulder Berm Gutter
3150000000-N	862	5	EA	Additional Guardrail Posts
3215000000-N	862	4	EA	Guardrail Anchor Units, TYPE III
3270000000-N	SP	4	EA	Guardrail Anchor Units, GRAU 350
3635000000-E	876	30	Tons	Rip Rap, Class II
3656000000-E	876	35	SY	Geotextile for Drainage
4400000000-E	1110	304	SF	Work Zone Signs (Stationary)
4410000000-E	1110	82	SF	Work Zone Signs (Barricade Mounted)
4445000000-E	1145	64	LF	Barricades (Type III)
4810000000-E	1205	1,800	LF	Paint Pavement Marking Lines (4")
6000000000-E	1605	850	LF	Temporary Silt Fence
6009000000-E	1610	20	Tons	Erosion Control Stone, Class B
6012000000-E	1610	20	Tons	Sediment Control Stone
6015000000-E	1615	0.50	ACR	Temporary Mulching
6018000000-E	1620	50	LBS	Seed For Temporary Seeding
6021000000-E	1620	0.25	Tons	Fertilizer For Temporary Seeding
6030000000-E	1630	30	CY	Silt Excavation
6036000000-E	1631	35	SY	Matting For Erosion Control
6042000000-E	1632	60	LF	1/4" Hardware Cloth
6071010000-E	SP	65	LF	Wattle
6071020000-E	SP	10	LBS	Polyacrylamide (PAM)
6084000000-E	1660	0.2	ACR	Seeding & Mulching
6090000000-E	1661	50.0	LBS	Seed For Repair Seeding
6093000000-E	1661	0.25	Tons	Fertilizer For Repair Seeding
6096000000-E	1662	50.0	LBS	Seed For Supplemental Seeding
6108000000-E	1665	0.25	Tons	Fertilizer Topdressing
				STRUCTURAL ITEMS
8035000000-N	402	1.0	LS	Removal Of Existing Structure
8121000000-N	412	1.0	LS	Unclassified Structure Excavation
8182000000-E	420	24.8	CY	Class A Concrete (Bridge)
8210000000-E	422	1.0	LS	Bridge Approach Slabs
8217000000-E	425	3,694.0	LBS	Reinforcing Steel (Bridge)
8364000000-E	450	445.0	LF	HP12X53 Steel Piles
8505000000-E	460	80.25	LF	Vertical Concrete Barrier Rail
8608000000-E	876	195.00	Tons	Rip Rap Class II (2'-0" Thick)
8622000000-E	876	217.00	SY	Geotextile For Drainage
8657000000-E	430	1.00	LS	Elastomeric Bearings
8762000000-E	430	360.0	LF	3'-0" X 1'-9" Prestressed Concrete Cored Slabs

$$$$$SYSTIME$$$$$
$$$$$$$$$$$$$$$$$$$$$$DGN$$$$$$$$$$$$$$$$$$$$$
$$$$USERNAME$$$$

6/21/00

COMPUTED BY: CBC	DATE: 1-4-12
CHECKED BY: RMS	DATE: 1-4-12

STATE OF NORTH CAROLINA
DIVISION OF HIGHWAYS

PROJECT REFERENCE NO.	SHEET NO.
BD-51140	3-A

RIGHT OF WAY AREA DATA

PARCEL NO.	PROPERTY OWNERS NAMES	TOTAL ACREAGE	AREA TAKEN (sf)	AREA REMAINING RT. (Acre)	AREA REMAINING LT. (Acre)	CONST. EASE. (sf)	PERM. UTIL. EASE. (sf)	TEMP. DRAIN. EASE. (sf)
3	RONALD B. ARNOLD	4.122	1125.132	4.096				

PAVEMENT REMOVAL SUMMARY

IN SQUARE YARDS					
LINE	LOCATION	ASPHALT REMOVAL	ASPHALT BREAK-UP	CONCRETE REMOVAL	CONCRETE REMOVAL
-L-	10+50 TO 11+50	105			
-L-	11+91.43 TO 12+12.50	42			
-L-	12+38 TO 12+55.68	35			
	TOTAL	182			

Approximate quantities only. Unclassified excavation, borrow excavation, fine grading, clearing and grubbing, and removal of existing pavement will be paid for at the contract lump sum price for "grading".

NOTE: Invert Elevations are for Bid Purposes only and shall not be used for project construction stakeout.
See "Standard Specifications For Roads and Structures, Section 300-5".

SUB-REGIONAL & REGIONAL LIST OF PIPES, ENDWALLS, ETC. (FOR PIPES 48" & UNDER)

STATION / SIZE / THICKNESS OR GAUGE	LOCATION (LT,RT, OR CL)	STRUCTURE NO. FROM	STRUCTURE NO. TO	TOP ELEVATION	INVERT ELEVATION	INVERT ELEVATION	SLOPE CRITICAL	DRAINAGE PIPE (RCP, CSP, CAAP, HDPE, or PVC) 12"	15"	18"	24"	30"	36"	42"	48"	DO NOT USE RCP	DO NOT USE CSP	DO NOT USE CAAP	DO NOT USE HDPE
-L- 11+94	LT	4-1		2669.50	2666.75														
-L- 11+94	LT	4-1	OUT		2966.75	2966.50			12										
-L- 13+55	LT	4-2																	
-L- 14+15	LT	4-3																	
TOTAL									12										

STATION	C.S. PIPE 12" .064	15" .064	18" .064	24" .064	36" .079	42" .109	48" .109	R.C. PIPE (CLASS III) 15"	18"	24"	30"	36"	42"	48"	R.C. PIPE (CLASS IV) 12"	15"	18"	24"	30"	36"	42"	48"
-L- 11+94																						
-L- 11+94																						
-L- 13+55																						
-L- 14+15																						
TOTAL																						

STATION	**" R. C. PIPE (CLASS V)	**" R. C. PIPE CULVERTS, CONTRACTOR DESIGN PIPE	**" R. C. PIPE CULVERTS, CONTRACTOR DESIGN PIPE	15" SIDE DRAIN PIPE	18" SIDE DRAIN PIPE	ENDWALLS STD. 838.01, STD. 838.11 OR STD. 838.80 (UNLESS NOTED OTHERWISE) CU. YDS. R.C.P.	C.S.P.	QUANTITIES FOR DRAINAGE STRUCTURES PER EACH (0' THRU 5.0')	* TOTAL L.F. FOR PAY QUANTITY SHALL BE COL. 'A' + (1.3 X COL.'B') LIN. *FT. A 5.0' THRU 10.0'	B 10.0' AND ABOVE	C.B. STD. 840.01 OR STD. 840.02	FRAME, GRATES AND HOOD STANDARD 840.03 TYPE OF GRATE E	F	G		CONCRETE TRANSITIONAL SECTION CATCH BASIN	DROP INLET			T.B.D.I. FRAMES AND NARROW SLOT PLATE GRATES STD. 840.29	T.B.D.I. STD. 840.35			CORR. STEEL ELBOWS NO. & SIZE	CONC. COLLARS CL. "B" C.Y. STD 840.72	CONC. & BRICK PIPE PLUG, C.Y. STD. 840.71	PIPE REMOVAL LIN.FT.	REMARKS
-L- 11+94								1												1	1							
-L- 11+94																												
-L- 13+55					40																							REMOVE & REPLACE EX. 18" CMP
-L- 14+15					32																							REMOVE & REPLACE EX. 15" CMP
TOTAL					72			1												1	1							

ABBREVIATIONS

C.B.	CATCH BASIN
N.D.I.	NARROW DROP INLET
D.I.	DROP INLET
G.D.I.	GRATED DROP INLET
G.D.I. (N.S.)	GRATED DROP INLET (NARROW SLOT)
J.B.	JUNCTION BOX
M.H.	MANHOLE
T.B.D.I.	TRAFFIC BEARING DROP INLET
T.B.J.B.	TRAFFIC BEARING JUNCTION BOX

"N" = DISTANCE FROM EDGE OF LANE TO FACE OF GUARDRAIL.
TOTAL SHOULDER WIDTH = DISTANCE FROM EDGE OF TRAVEL LANE TO SHOULDER BREAK POINT.
FLARE LENGTH = DISTANCE FROM LAST SECTION OF PARALLEL GUARDRAIL TO END OF GUARDRAIL.
W = TOTAL WIDTH OF FLARE FROM BEGINNING OF TAPER TO END OF GUARDRAIL.
G = GATING IMPACT ATTENUATOR TYPE 350
NG = NON-GATING IMPACT ATTENUATOR TYPE 350

GUARDRAIL SUMMARY

SURVEY LINE	BEG. STA.	END STA.	LOCATION	LENGTH STRAIGHT	SHOP CURVED	DOUBLE FACED	WARRANT POINT APPROACH END	TRAILING END	"N" DIST. FROM E.O.L.	TOTAL SHOUL. WIDTH	FLARE LENGTH APPROACH END	TRAILING END	W APPROACH END	TRAILING END	ANCHORS XI MOD	XI	GRAU 350	M-350	TYPE III	CAT-1	B-77	BIC	AT-1	IMPACT ATTENUATOR TYPE 350 EA	G	NG	SINGLE FACED GUARDRAIL	REMOVE EXISTING GUARDRAIL	REMOVE AND STOCKPILE EXISTING GUARDRAIL	REMARKS
-L-	11+32.81	12+02.43	LT	75			12+02.43		2.5	6		50		1			1		1											
-L-	11+34.57	12+02.43	RT	75				12+02.43	2.5	6	50		1				1		1											
-L-	12+44.68	13+13.42	LT	75				12+44.68	2.5	6	50		1				1		1											
-L-	12+44.68	13+13.42	RT	75			12+44.68		2.5	6		50		1			1		1											
			SUBTOTAL	300													4		4											
			LESS DEDUCTIONS FOR ANCHORS																											
			GRAU-350 4 @ 50'=	-200																										
			TYPE III 4 @ 25'=	-100																										
			PROJECT TOTALS:	0																										
			ADDITIONAL GUARDRAIL POSTS=5 EA.																											

$$$$SYSTIME$$$$
$$$$DGN$$$$
$$$$USERNAME$$$$

COMPUTED BY: CBC DATE: 1-4-12
CHECKED BY: RMS DATE: 1-4-12

PROJECT REFERENCE NO.	SHEET NO.
BD-5114O	3-B

DIVISION OF HIGHWAYS
STATE OF NORTH CAROLINA

SUMMARY OF EARTHWORK

IN CUBIC YARDS

LOCATION	UNCLASSIFIED EXCAVATION	UNDERCUT	EMBT+%	BORROW	WASTE
SUMMARY NO.1					
-L- STA. 10+50.00 TO STA. 12+02.43 (BEG. BRIDGE)	86		39		47
SUBTOTAL SUMMARY NO.1	86		39		47
SUMMARY NO.2					
-L- STA. 12+44.68 (END BRIDGE) TO STA. 15+00.00	22		67	45	
SUBTOTAL SUMMARY NO.2	22		67	45	
PROJECT SUBTOTAL	108		106	45	47
WASTE IN LIEU OF BORROW				-45	-45
GRAND TOTAL	108		106	0	2
SAY	115			10	

CONTINGENCY ITEMS:

INCIDENTAL STONE = 50 TONS

UNDERCUT EXCAVATION = 50 CY

SHALLOW UNDERCUT = 100 CY

SELECT GRANULAR MATERIAL = 50 CY

CLASS IV SUBGRADE STABILIZATION = 50 TONS

GEOTEXTILE FOR SOIL STABILIZATION = 50 SY

Approximate quantities only. Unclassified excavation, borrow excavation, fine grading, clearing and grubbing, and removal of existing pavement will be paid for at the contract lump sum price for "grading".

PROJECT REFERENCE NO.	SHEET NO.
BD-51140	4
R/W SHEET NO.	
ROADWAY DESIGN ENGINEER	HYDRAULICS ENGINEER

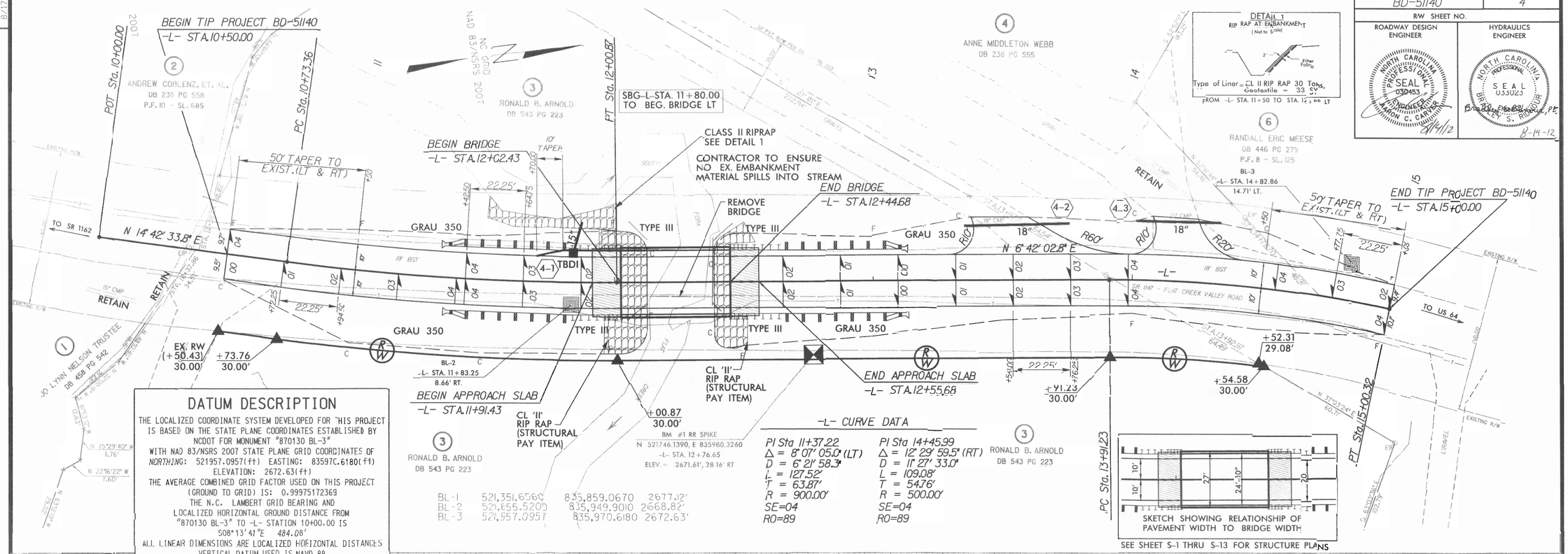

DATUM DESCRIPTION

THE LOCALIZED COORDINATE SYSTEM DEVELOPED FOR THIS PROJECT IS BASED ON THE STATE PLANE COORDINATES ESTABLISHED BY NCDOT FOR MONUMENT "870130 BL-3"
WITH NAD 83/NSRS 2007 STATE PLANE GRID COORDINATES OF
NORTHING: 521957.0957(ft) EASTING: 83597C.6180(ft)
ELEVATION: 2672.63(ft)
THE AVERAGE COMBINED GRID FACTOR USED ON THIS PROJECT (GROUND TO GRID) IS: 0.9997517236 9
THE N.C. LAMBERT GRID BEARING AND LOCALIZED HORIZONTAL GROUND DISTANCE FROM "870130 BL-3" TO -L- STATION 10+00.00 IS
S08°13'41"E 484.08'
ALL LINEAR DIMENSIONS ARE LOCALIZED HORIZONTAL DISTANCES
VERTICAL DATUM USED IS NAVD 88

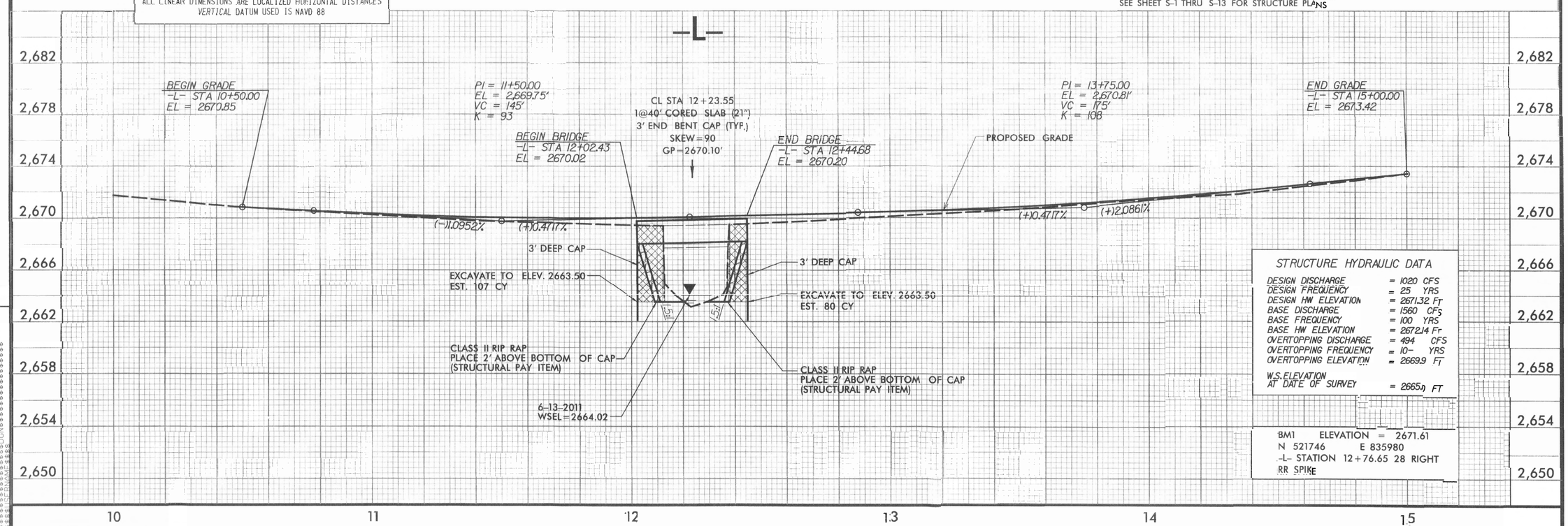

STRUCTURE HYDRAULIC DATA

DESIGN DISCHARGE	= 1020 CFS
DESIGN FREQUENCY	= 25 YRS
DESIGN HW ELEVATION	= 2671.32 FT
BASE DISCHARGE	= 1560 CFS
BASE FREQUENCY	= 100 YRS
BASE HW ELEVATION	= 2672.14 FT
OVERTOPPING DISCHARGE	= 494 CFS
OVERTOPPING FREQUENCY	= 10- YRS
OVERTOPPING ELEVATION	= 2669.9 FT
W.S. ELEVATION AT DATE OF SURVEY	= 2665.0 FT

BM1 ELEVATION = 2671.61
N 521746 E 835980
-L- STATION 12+76.65 28 RIGHT
RR SPIKE

REVISIONS
1. 1/11/12 ELIMINATED R/W TAKE @ -L- STA 15+00 RT

8/17/99

STATE OF NORTH CAROLINA
DIVISION OF HIGHWAYS

TRANSPORTATION MANAGEMENT PLAN

TRANSYLVANIA COUNTY

DIVISION 14

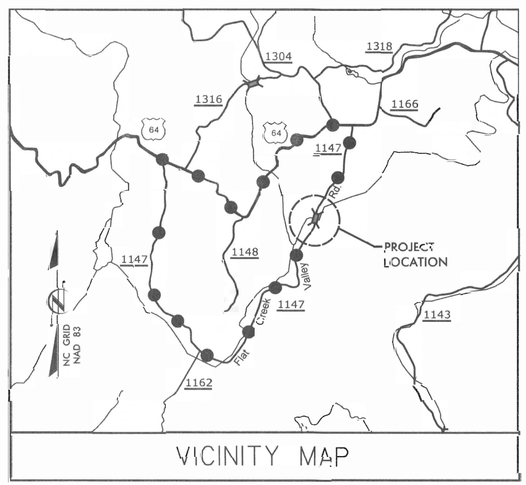

VICINITY MAP

OFF-SITE DETOUR ROUTE

LOCATION: BRIDGE NO. 130 OVER SOUTH FORK FLAT CREEK ON SR 1147 (FLAT CREEK VALLEY RD.)

INDEX OF SHEETS

SHEET NO.	TITLE
TMP-1	TITLE SHEET, LEGEND, AND INDEX OF SHEETS
TMP-1A	LIST OF APPLICABLE ROADWAY STANDARD DRAWINGS, GENERAL NOTES AND TRANSPORTATION OPERATIONS
TMP-2	TEMPORARY TRAFFIC CONTROL DETAIL, PHASING NOTES OFFSITE DETOUR SIGNING AND ROAD CLOSURE
SD-1	SPECIAL SIGN DESIGN

LEGEND

GENERAL

NORTH ARROW

TRAFFIC CONTROL DEVICES

BARRICADE (TYPE III)

TEMPORARY SIGNING

STATIONARY SIGN

SHEET NO.
TMP-1

TIP PROJECT: BD-5114O

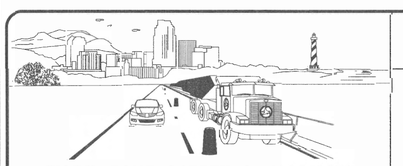

WORK ZONE SAFETY & MOBILITY
"from the MOUNTAINS to the COAST"

N.C.D.O.T. WORK ZONE TRAFFIC CONTROL
1580 MAIL SERVICE CENTER (MSC) RALEIGH, NC 27699-1580
1020 BIRCH RIDGE DRIVE, RALEIGH, NC 27610 (DELIVERY)
PHONE: (919) 250-4094 FAX: (919) 250-4098

J. S. BOURNE, P.E. — STATE TRAFFIC MANAGEMENT ENGINEER
LLOYD D. BROWN, P.E. — TRAFFIC CONTROL PROJECT ENGINEER
AARON CARVER, P.E. — TRAFFIC CONTROL PROJECT DESIGN ENGINEER
AARON CARVER, P.E. — TRAFFIC CONTROL DESIGN ENGINEER

DIVISION OF HIGHWAYS · STATE OF NORTH CAROLINA · DEPARTMENT OF TRANSPORTATION · WORK ZONE TRAFFIC CONTROL

V&M Vaughn & Melton
Consulting Engineers
Asheville, North Carolina 828-253-2796
Charlotte, North Carolina 704-357-0485

Copyright © 2006 Vaughn & Melton, Inc.
All Rights Reserved

PROJECT ENGINEER: LLOYD D. BROWN, P.E.
DESIGN ENGINEER: AARON CARVER, P.E.

APPROVED:
DATE: August 13, 2012

SEAL

NORTH CAROLINA PROFESSIONAL SEAL 20119 ENGINEER LLOYD D. BROWN

$$$$$SYTIME$$$$$
$$$$$PN$$$$$
$$$$$DGNNAME$$$$$

PROJ. REFERENCE NO.	SHEET NO.
BD-51140	TMP-1A

ROADWAY STANDARD DRAWINGS

THE FOLLOWING ROADWAY STANDARDS AS SHOWN IN "ROADWAY STANDARD DRAWINGS" - PROJECT SERVICES UNIT - N.C. DEPARTMENT OF TRANSPORTATION - RALEIGH, N.C., DATED JANUARY 2012 ARE APPLICABLE TO THIS PROJECT AND BY REFERENCE HEREBY ARE CONSIDERED A PART OF THESE PLANS:

STD. NO.	TITLE
1101.03	TEMPORARY ROAD CLOSURES
1101.05	WORK ZONE VEHICLE ACCESSES
1101.11	TRAFFIC CONTROL DESIGN TABLES
1110.01	STATIONARY WORK ZONE SIGNS
1130.01	DRUMS
1145.01	BARRICADES

TRANSPORTATION OPERATIONS

CONSTRUCTION

REMOVE AND REPLACE EXISTING STRUCTURE AND APPROACHES ALONG THE EXISTING ROADWAY ALIGNMENT AS SHOWN IN THE CONSTRUCTION PLANS.

TMP DESIGN PARAMETERS

TRAFFIC WILL BE DETOURED OFF-SITE DURING THE CONSTRUCTION PERIOD.

THE OFF-SITE DETOUR WILL INCLUDE SR 1147, AND US 64 (SEE SHEET TMP-2).

GENERAL NOTES

CHANGES MAY BE REQUIRED WHEN PHYSICAL DIMENSIONS IN THE DETAIL DRAWINGS, STANDARD DETAILS AND ROADWAY DETAILS ARE NOT ATTAINABLE TO MEET FIELD CONDITIONS, OR RESULT IN DUPLICATE, OR UNDESIRED OVERLAPPING OF DEVICES. MODIFICATION MAY INCLUDE: MOVING, SUPPLEMENTING, COVERING OR REMOVAL OF DEVICES, AS DIRECTED BY THE ENGINEER.

THE FOLLOWING GENERAL NOTES APPLY AT ALL TIMES FOR THE DURATION OF THE CONSTRUCTION PROJECT, EXCEPT WHEN OTHERWISE NOTED IN THE PLAN, OR DIRECTED BY THE ENGINEER.

TRAFFIC PATTERN ALTERATIONS

A) NOTIFY THE ENGINEER TWENTY ONE (21) CALENDAR DAYS PRIOR TO ANY TRAFFIC PATTERN ALTERATION.

SIGNING

B) PROVIDE PERMANENT SIGNING.

C) PROVIDE SIGNING AND DEVICES REQUIRED TO CLOSE THE ROAD ACCORDING TO THE ROADWAY STANDARD DRAWINGS AND TRAFFIC CONTROL PLANS.

PROVIDE SIGNING REQUIRED FOR THE OFF-SITE DETOUR ROUTE AS SHOWN IN THE TRAFFIC CONTROL PLANS.

D) COVER OR REMOVE ALL SIGNS AND DEVICES REQUIRED TO CLOSE THE ROAD WHEN ROAD CLOSURE IS NOT IN OPERATION.

COVER OR REMOVE ALL SIGNS REQUIRED FOR THE OFF-SITE DETOUR WHEN THE DETOUR IS NOT IN OPERATION.

E) ENSURE ALL NECESSARY SIGNING IS IN PLACE PRIOR TO ALTERING ANY TRAFFIC PATTERN.

TRAFFIC CONTROL DEVICES

F) PLACE TYPE III BARRICADES WITH "ROAD CLOSED" SIGN R-11-2 ATTACHED OF SUFFICIENT LENGTH TO CLOSE ENTIRE ROADWAY.

PAVEMENT MARKINGS AND MARKERS

G) INSTALL PAVEMENT MARKINGS AND PAVEMENT MARKERS ON THE FINAL SURFACE AS SHOWN IN THE PAVEMENT MARKING PLAN.

H) TIE PROPOSED PAVEMENT MARKING LINES TO EXISTING PAVEMENT MARKING LINES.

LOCAL NOTES

1. NOTIFY TRANSYLVANIA COUNTY EMERGENCY SERVICES AND PUBLIC SCHOOLS AT LEAST ONE MONTH PRIOR TO ROAD CLOSURE.

V&M
Vaughn & Melton
Consulting Engineers
Asheville, North Carolina 828-253-2796
Charlotte, North Carolina 704-357-0488
Tri-Cities, Tennessee 423-467-8403
Knoxville Tennessee 865-546-5800
Middlesboro, Kentucky 606-248-6400
Spartanburg, South Carolina 864-574-4775
Copyright © 2006 Vaughn & Melton, Inc. All Rights Reserved

APPROVED: DATE: 8/13/12

SEAL

NORTH CAROLINA PROFESSIONAL SEAL 20119 ENGINEER LLOYD D. BROWN

DIVISION OF HIGHWAYS STATE OF NORTH CAROLINA DEPARTMENT OF TRANSPORTATION WORK ZONE TRAFFIC CONTROL

ROADWAY STANDARD DRAWINGS, GENERAL NOTES & TRANSPORTATION OPERATIONS

USER: SYSTIME: $$DGN: $$PLANG: $$USRNAME: $$

PROJ. REFERENCE NO.	SHEET NO.
BD-51140	TMP-2

OFF-SITE DETOUR ●—●—●

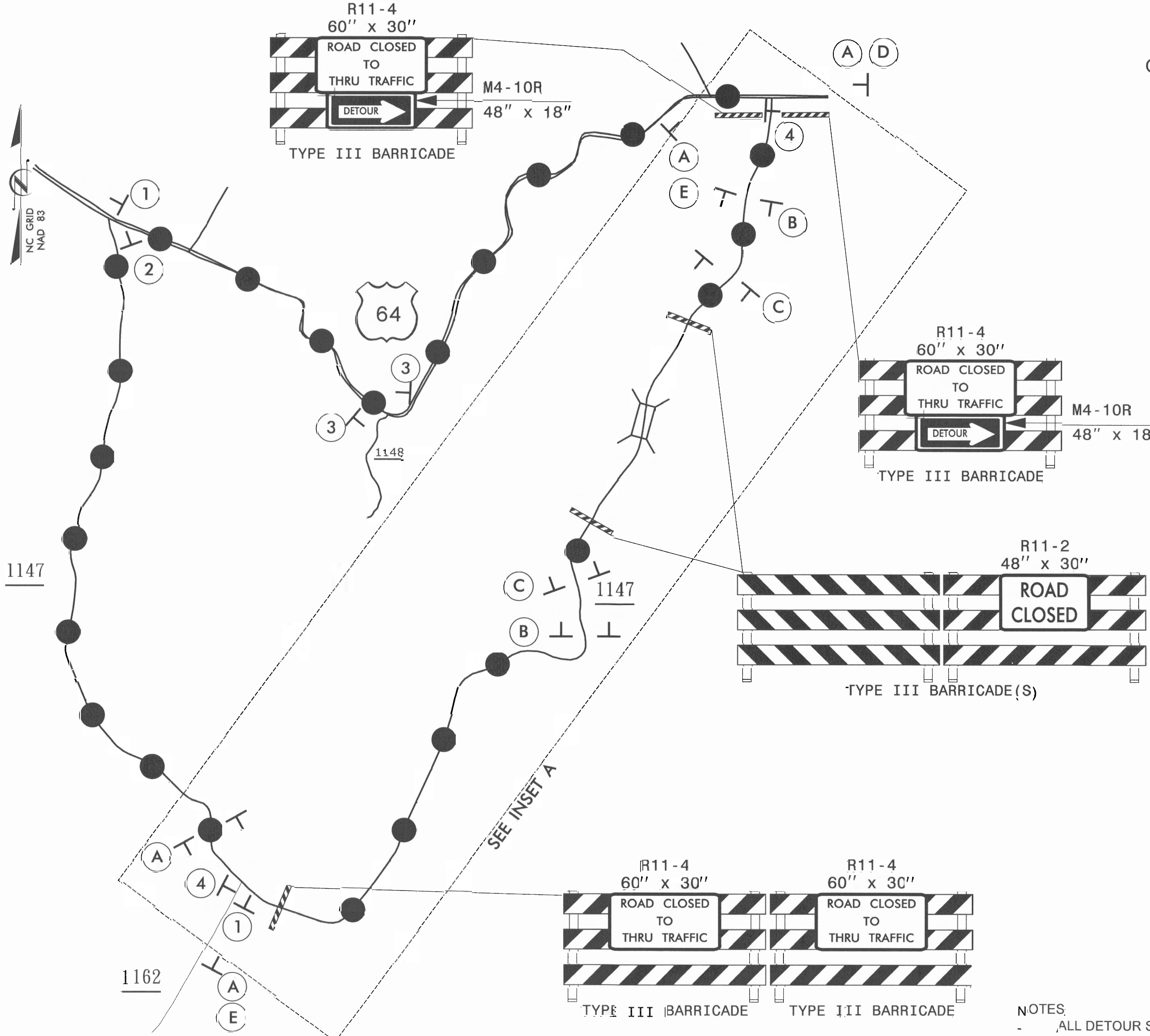

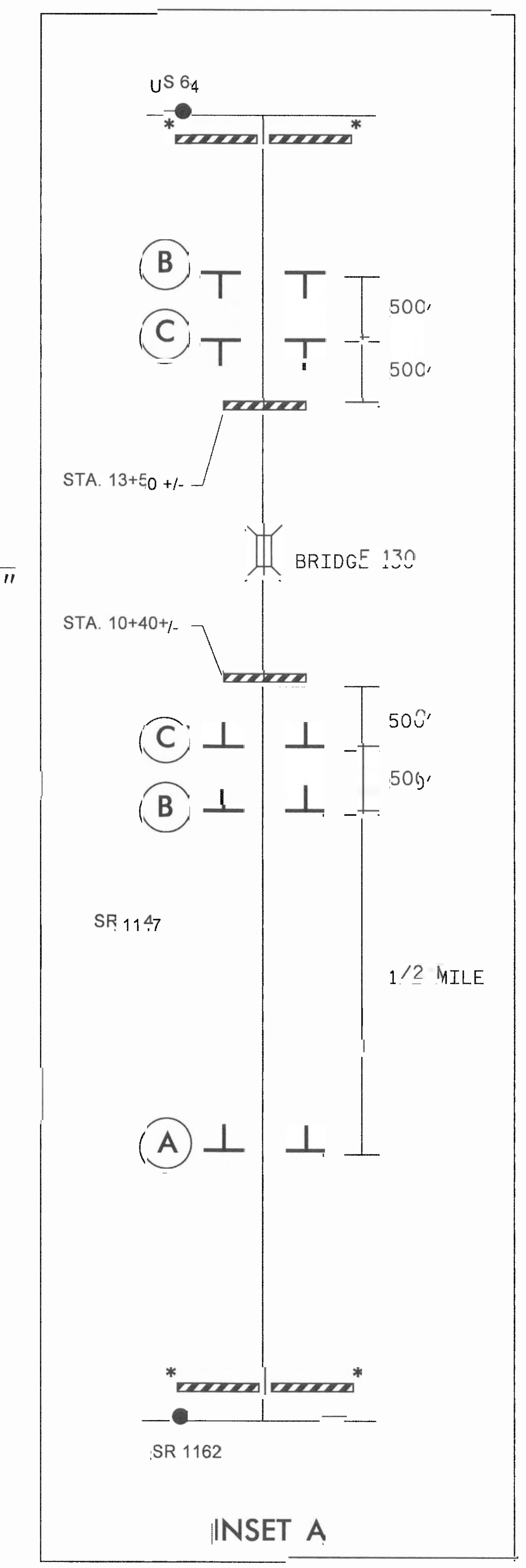

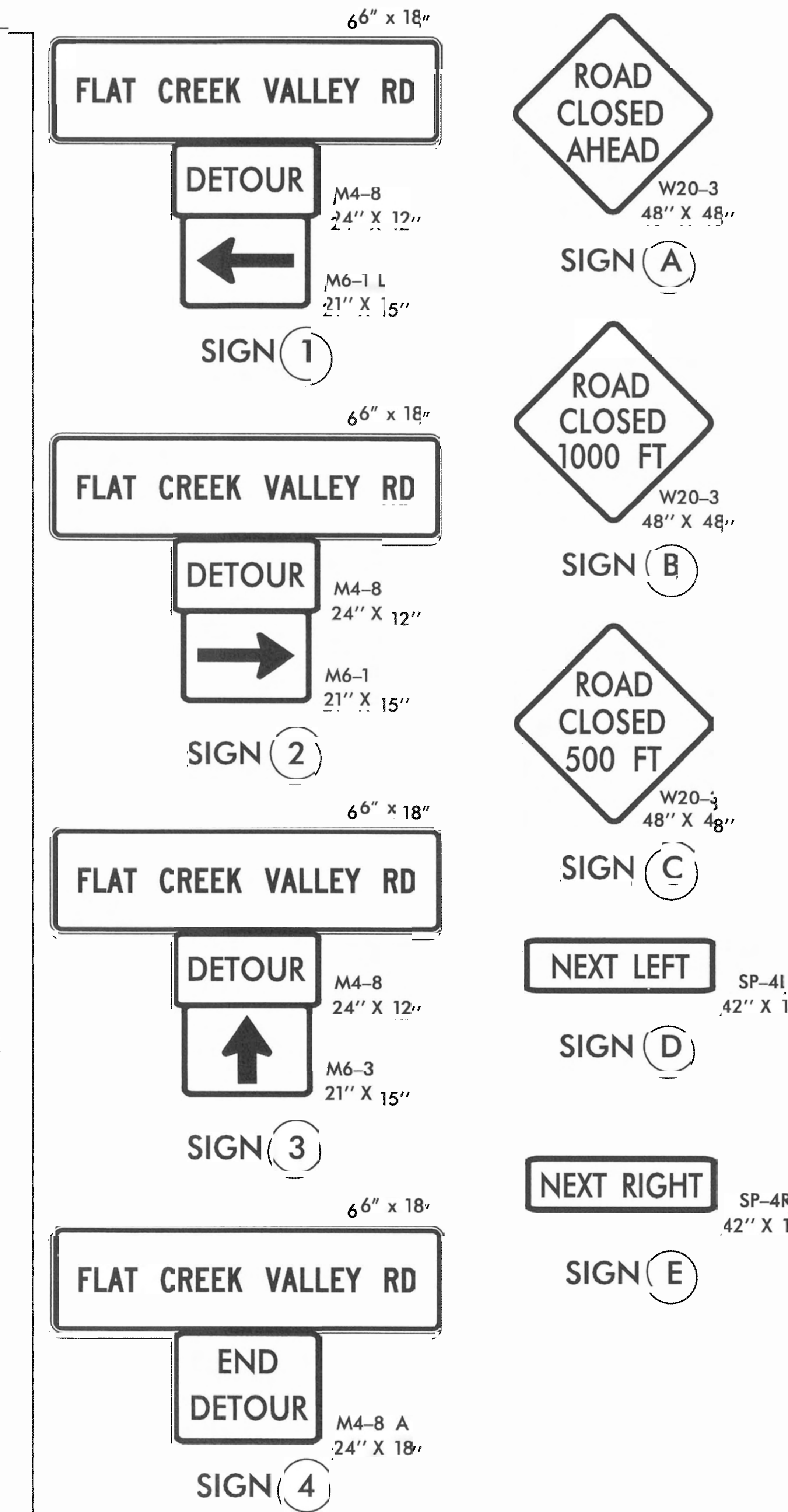

NOTES:

- ALL DETOUR SIGN LOCATIONS ARE APPROXIMATE.
- ALL DETOUR SIGNS ARE BLACK ON ORANGE UNLESS OTHERWISE NOTED.
- TRAFFIC CONTROL DEVICES (A) THROUGH (E) SHALL BE INSTALLED ACCORDING TO ROADWAY STANDARD DRAWING 1101.03, SHEET 1 OF 9.
- TRAFFIC CONTROL DEVICES (1) THROUGH (4) SHALL BE INSTALLED AS PER ENGINEER'S INSTRUCTIONS, AND AS SHOWN HEREON.

* SEE ROADWAY STANDARD DRAWING NO. 1101.03, SHEET 1 OF 9, FOR ADDITIONAL WORK ZONE SIGNS.

PROJECT PHASING

STEP 1: - INSTALL OFF-SITE DETOUR ROUTE SIGN ASSEMBLIES FOR THE CLOSING OF SR 1147 (FLAT CREEK VALLEY ROAD, -L-).

- USING ROADWAY STANDARD DRAWING NO. 1101.03, SHEETS 1 OF 9 AND 2 OF 9, CLOSE SR 1147 (FLAT CREEK VALLEY ROAD, -L-) TO THRU TRAFFIC.

STEP 2: - REMOVE THE EXISTING STRUCTURE AND CONSTRUCT THE PROPOSED STRUCTURE AND ROADWAY UP TO AND INCLUDING THE FINAL LAYER OF SURFACE COURSE AND PLACE FINAL PAVEMENT MARKINGS ON SR 1147 (FLAT CREEK VALLEY ROAD, -L-) FROM STATION 10+50 +/- -L- TO STATION 15+00 +/- -L-. (SEE CONSTRUCTION PLANS).

STEP 3: - REMOVE ALL TRAFFIC CONTROL DEVICES, SIGNING AND DETOUR ROUTE SIGNING.

- OPEN TO FINAL TRAFFIC PATTERN.

$$$SYSTIME$$$ $$$$$$DGN$$$$$$$$$$$$$$$$$$$$$ $$$$USERNAME$$$$

V&M
Vaughn & Melton
Consulting Engineers
Asheville, North Carolina 828·253·2796
Charlotte, North Carolina 704·357·0488
Tri-Cities, Tennessee 423·467·8401
Knoxville, Tennessee 865·546·5800
Middlesboro, Kentucky 606·248·6600
Spartanburg, South Carolina 864·574·4775

Copyright © 2006 Vaughn & Melton, Inc. All Rights Reserved

APPROVED: [signature] DATE: 8/15/12

SEAL

NORTH CAROLINA PROFESSIONAL SEAL 20119 ENGINEER LLOYD D. BROWN

DIVISION OF HIGHWAYS · STATE OF NORTH CAROLINA · DEPARTMENT OF TRANSPORTATION · WORK ZONE TRAFFIC CONTROL

TEMPORARY TRAFFIC CONTROL DETAIL, PHASING NOTES, OFF-SITE DETOUR SIGNING AND ROAD CLOSURE

PROJ. REFERENCE NO.	SHEET NO.
BD-51140	SD-1

SIGN NUMR: FALT CREEK VALLEY RD
TYPE: D Ground
QUANTITY: 1

BACKG. COLOR: Orange
COPY COLOR: Black

DESIGN BY: ACC
PROJECT ID: BD-51140

CHK BY: ACC
DIV: 14

STD #: STD
DATE: Jun 04,2012

SIGN WIDTH: 5'-6"
HEIGHT: 1'-6"
TOTAL AREA: 8.25 Sq.Ft.

MAT'L: 0.063 in.(1.6 mm) ALUMINUM

BORDER TYPE: FLUSH
RECESS: 0.47"
WIDTH: 0.63"
RADII: 1.5"

NO. Z BARS:
LENGTH: in.

SYMBOL	X	Y	WID	HT

USE NOTES: 1,3,4,6

1. Legend and border shall be direct applied encapsulated lens reflective sheeting.
2. Legend and border shall be direct applied enclosed lens reflective sheeting.
3. Shields shall be encapsulated lens reflective sheeting on 0.8mm aluminum and demountable.
4. Background shall be encapsulated lens reflective sheeting.
5. Background shall be enclosed lens reflective sheeting.
6. Center arrows vertically on sign.

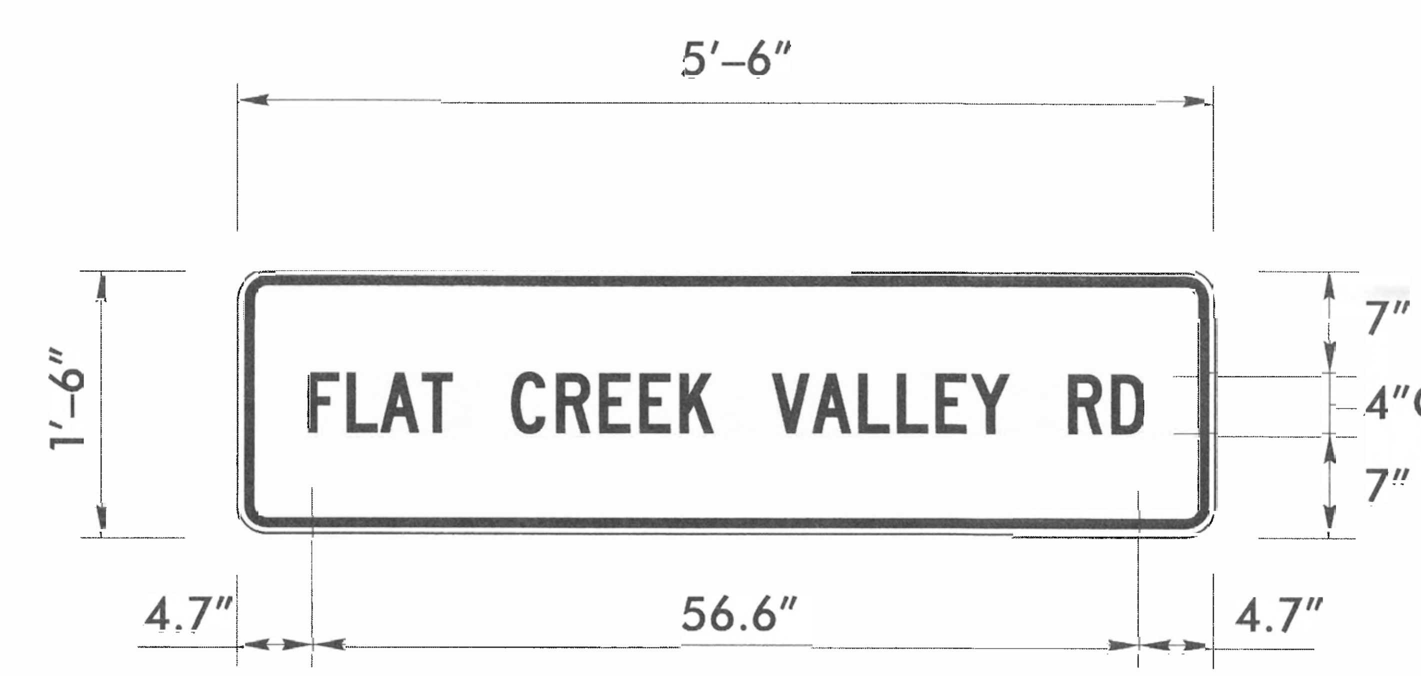

BORDER
R=1.5"
TH=0.63"
IN=0.47"

Panel Style: construction_guide.ssi
M.U.T.C.D.: 2009 Edition

Letter spacings are to start of next letter

		F	L	A	T		C	R	E	E	K		V	A	L	L	E	Y		R	D	Series/Size Text Length
	4.7	2.6	2.3	2.8	2	4	3	2.9	2.7	2.7	2.2	4	2.7	3.1	2.6	2.6	2.4	2.6	4	2.9	2.2	C 2000/4 56.5

Spacing Factor is 1 unless specified otherwise

FILENAME: GS40_ENGL

APPROVED: DATE: 8/13/12

SEAL

NORTH CAROLINA PROFESSIONAL SEAL 20119 ENGINEER LLOYD D. BROWN

DIVISION OF HIGHWAYS STATE OF NORTH CAROLINA DEPARTMENT OF TRANSPORTATION WORK ZONE TRAFFIC CONTROL

SPECIAL SIGN DESIGN

PROJECT REFERENCE NO.	SHEET NO.
BD-51140	EC-1
R/W SHEET NO.	

ROADSIDE ENVIRONMENTAL UNIT
DEPARTMENT OF TRANSPORTATION
DIVISION OF HIGHWAYS
RALEIGH, N.C.

2012 STANDARD SPECIFICATIONS

EROSION CONTROL PLAN

ENVIRONMENTALLY SENSITIVE AREA
SEE PROJECT SPECIAL PROVISIONS

THESE EROSION AND SEDIMENT CONTROL PLANS COMPLY WITH THE REGULATIONS SET FORTH BY THE NCG-010000 GENERAL CONSTRUCTION PERMIT EFFECTIVE AUGUST 3, 2011 ISSUED BY THE NORTH COROLINA DEPARTMENT OF ENVIRONMENT AND NATURAL RESOURCES DIVISION OF WATER QUALITY.

Level III-A: Designer of Erosion and Sediment Control Plans

Aaron C. Carver, P.E.
Date Issued: May 2, 2007
Date Expires: December 31, 2013
Certification Number: 302

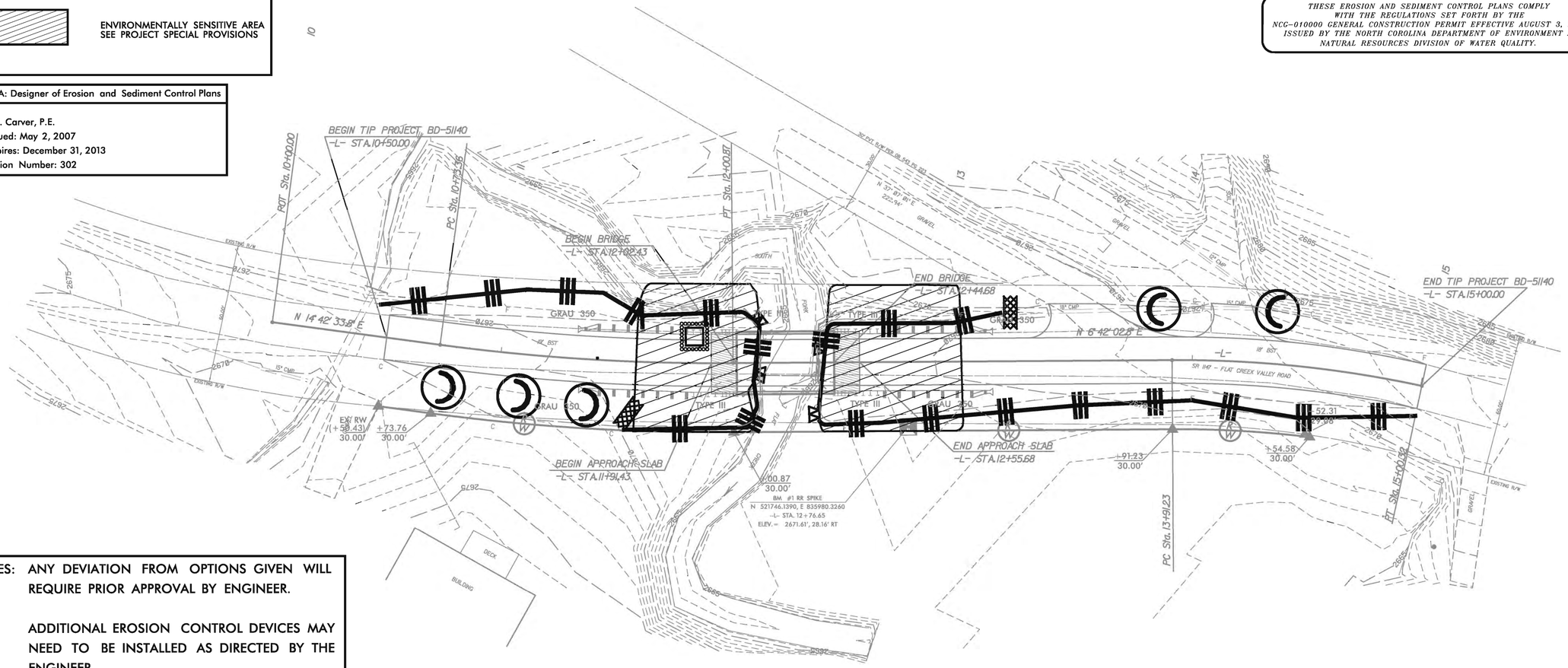

NOTES: ANY DEVIATION FROM OPTIONS GIVEN WILL REQUIRE PRIOR APPROVAL BY ENGINEER.

ADDITIONAL EROSION CONTROL DEVICES MAY NEED TO BE INSTALLED AS DIRECTED BY THE ENGINEER.

Std. #	Description	Symbol
	Wattle	
	Wattle with Polyacrylamide (PAM)	
1605.01	Temporary Silt Fence	
1606.01	Special Sediment Control Fence	
1632.03	Rock Inlet Sediment Trap Type C	
1633.01	Temporary Rock Silt Check Type-A	

PROJECT NO. BD-51140
COUNTY TRANSYLVANIA
STATION: 12+23.555

STATE OF NORTH CAROLINA
DEPARTMENT OF TRANSPORTATION
RALEIGH

BRIDGE #130 ON SR 1147
SOUTH FORK FLAT CREEK

REVISIONS						SHEET NO.
NO.	BY	DATE	NO.	BY	DATE	EC-1
1			3			TOTAL SHEETS
2			4			1

PROJECT REFERENCE NO.	SHEET NO.
BD-5140	EC-1A
R/W SHEET NO.	
ROADWAY DESIGN ENGINEER	HYDRAULICS ENGINEER

WATTLE WITH POLYACRYLAMIDE DETAIL

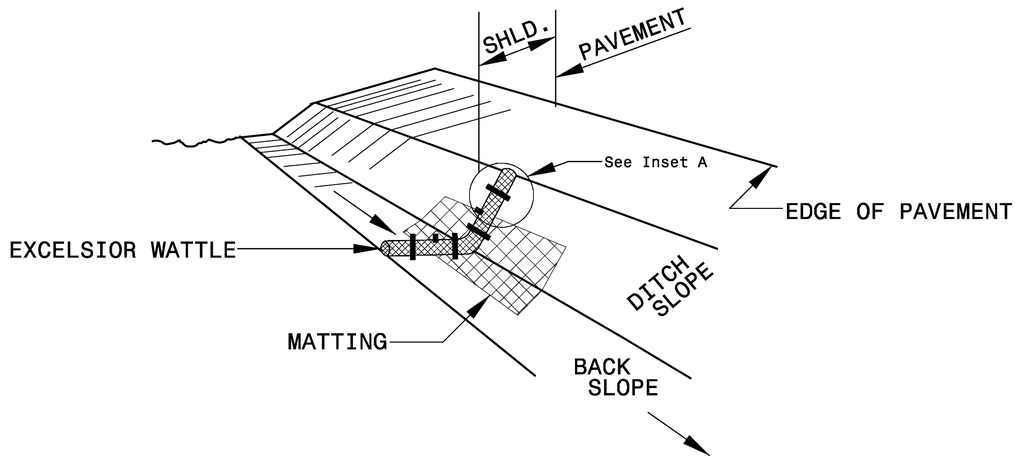

ISOMETRIC VIEW

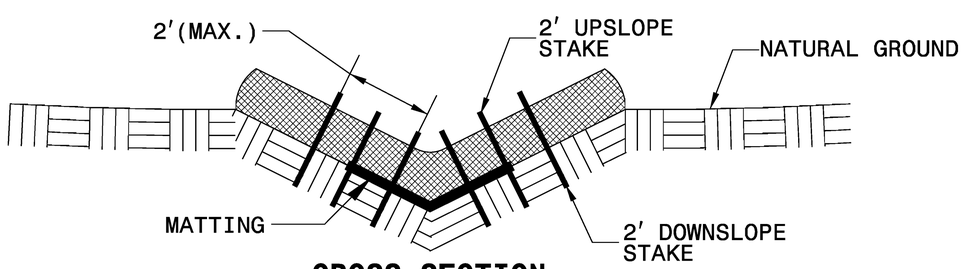

CROSS SECTION VEE DITCH

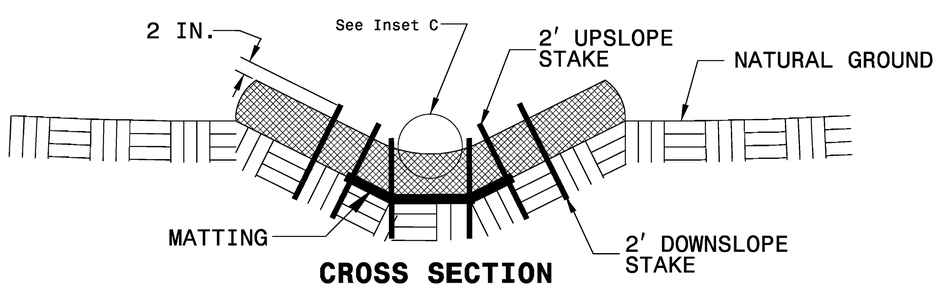

CROSS SECTION TRAPEZOIDAL DITCH

NOTES:

USE MINIMUM 12 IN. DIAMETER EXCELSIOR WATTLE.

USE 2 FT. WOODEN STAKES WITH A 2 IN. BY 2 IN. CROSS SECTION.

ONLY INSTALL WATTLE(S) TO A HEIGHT IN DITCH SO FLOW WILL NOT WASH AROUND WATTLE AND SCOUR DITCH SLOPES AND AS DIRECTED.

INSTALL A MINIMUM OF 2 UPSLOPE STAKES AND 4 DOWNSLOPE STAKES AT AN ANGLE TO WEDGE WATTLE TO BOTTOM OF DITCH.

PROVIDE STAPLES MADE OF 0.125 IN. DIAMETER STEEL WIRE FORMED INTO A U SHAPE NOT LESS THAN 12" IN LENGTH.

INSTALL STAPLES APPROXIMATELY EVERY 1 LINEAR FOOT ON BOTH SIDES OF WATTLE AND AT EACH END TO SECURE IT TO THE SOIL.

INSTALL MATTING IN ACCORDANCE WITH SECTION 1631 OF THE STANDARD SPECIFICATIONS.

PRIOR TO POLYACRYLAMIDE (PAM) APPLICATION, OBTAIN A SOIL SAMPLE FROM PROJECT LOCATION, AND FROM OFFSITE MATERIAL, AND ANALYZE FOR APPROPRIATE PAM FLOCCULANT TO BE APPLIED TO EACH WATTLE.

INITIALLY APPLY 3.5 OUNCES OF ANIONIC OR NEUTRALLY CHARGED POLYACRYLAMIDE (PAM) OVER WATTLE WHERE WATER WILL FLOW AND AFTER EVERY RAINFALL EVENT THAT IS EQUAL TO OR EXCEEDS 0.50 IN.

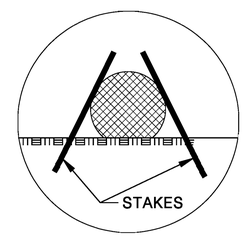

INSET A

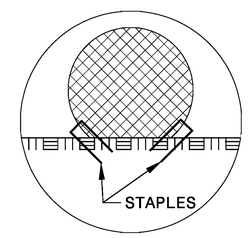

INSET B

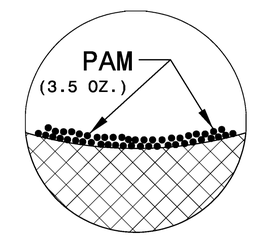

INSET C

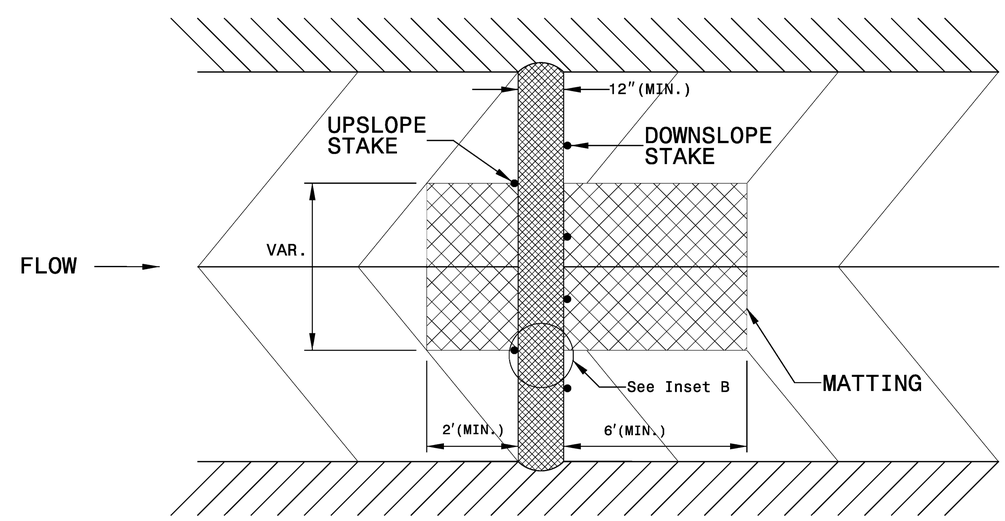

TOP VIEW

PROJECT REFERENCE NO.	SHEET NO.
BD-5140	EC-2
R/W SHEET NO.	
ROADWAY DESIGN ENGINEER	HYDRAULICS ENGINEER

STATE OF NORTH CAROLINA
DIVISION OF HIGHWAYS

SOIL STABILIZATION TIMEFRAMES

SITE DESCRIPTION	STABILIZATION TIME	TIMEFRAME EXCEPTIONS
PERIMETER DIKES, SWALES, DITCHES, AND SLOPES	7 DAYS	NONE
HIGH QUALITY WATER (HQW) ZONES	7 DAYS	NONE
SLOPES STEEPER THAN 3:1	7 DAYS	IF SLOPES ARE 10' OR LESS IN LENGTH AND ARE NOT STEEPER THAN 2:1, 14 DAYS ARE ALLOWED.
SLOPES 3:1 OR FLATTER	14 DAYS	7 DAYS FOR SLOPES GREATER THAN 50' IN LENGTH.
ALL OTHER AREAS WITH SLOPES FLATTER THAN 4:1	14 DAYS	NONE, EXCEPT FOR PERIMETERS AND HQW ZONES.

PROJECT REFERENCE NO.	SHEET NO.
BD-5114O	EC-3

DIVISION OF HIGHWAYS
STATE OF NORTH CAROLINA

SOIL STABILIZATION SUMMARY SHEET

MATTING FOR EROSION CONTROL

CONST SHEET NO.	LINE	FROM STATION	TO STATION	SIDE	ESTIMATE (SY)
4	-L-	14+00	14+50	LT	35
				SUBTOTAL	35
MISCELLANEOUS MATTING TO BE INSTALLED AS DIRECTED BY THE ENGINEER					
				TOTAL	35
				SAY	35

PERMANENT SOIL REINFORCEMENT MAT

CONST SHEET NO.	LINE	FROM STATION	TO STATION	SIDE	ESTIMATE (SY)
				SUBTOTAL	
		ADDITIONAL PSRM TO BE INSTALLED			
				TOTAL	
				SAY	

T.I.P. No.	SHEET NO.
BD-5114O	UO-1

TIP PROJECT: BD-5114O

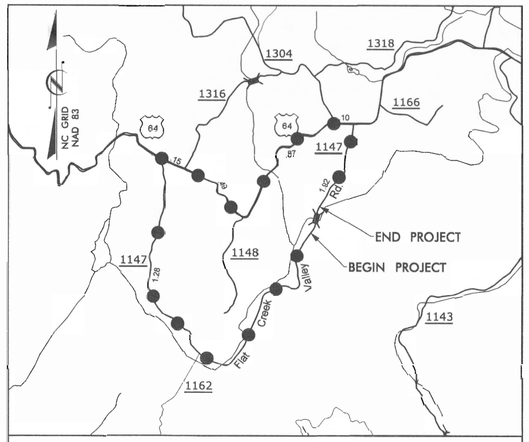

VICINITY MAP

DETOUR ROUTE

STATE OF NORTH CAROLINA
DIVISION OF HIGHWAYS

UTILITIES BY OTHERS PLANS
TRANSYLVANIA COUNTY

LOCATION: BRIDGE NO. 130 OVER SOUTH FORK FLAT CREEK ON SR 1147 (FLAT CREEK VALLEY ROAD)

TYPE OF WORK: AERIAL & UNDERGROUND TELEPHONE

UO-2

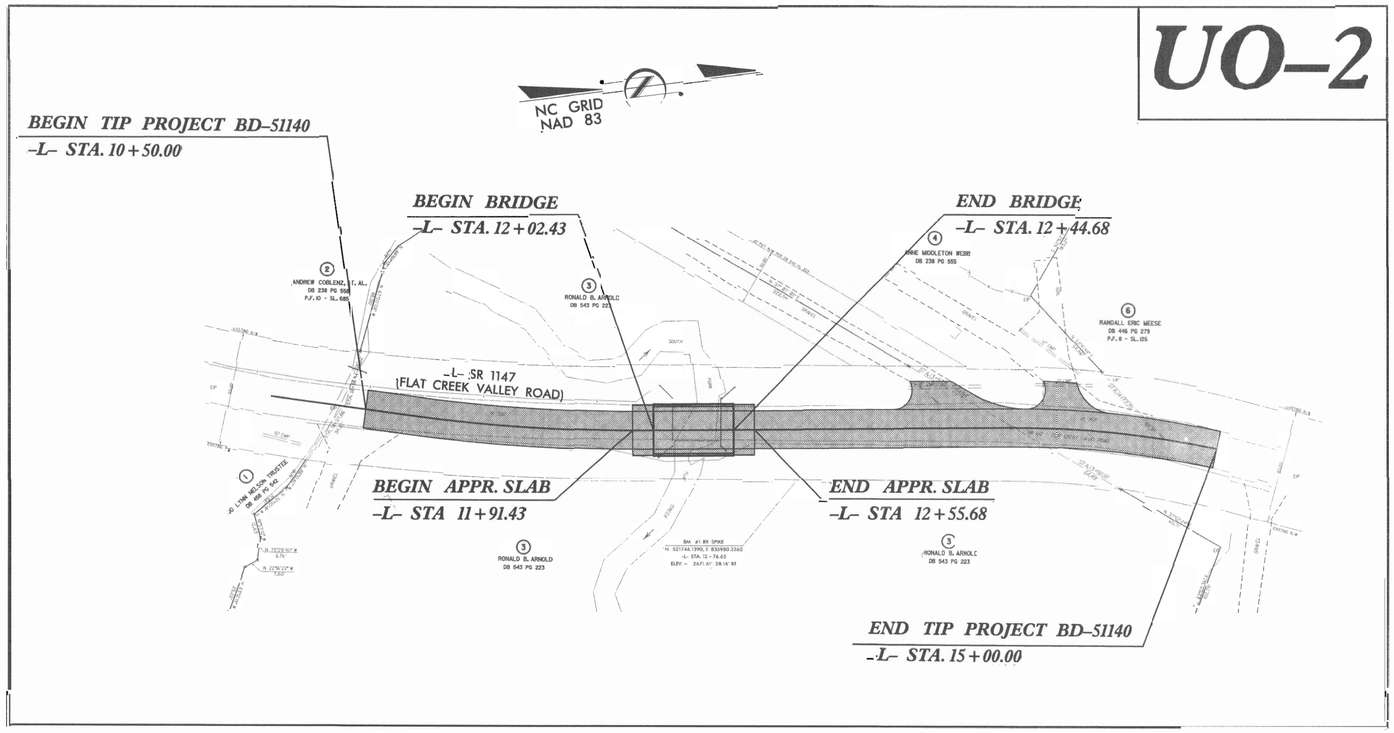

GRAPHIC SCALES

30 15 0 30 60

PLANS

INDEX OF SHEETS

SHEET NO.	DESCRIPTION
UO-1	TITLE SHEET
UO-2	UTILITY BY OTHERS PLAN SHEETS

UTILITY OWNERS ON PROJECT

(1) TELEPHONE - COMPORIUM
(2) POWER DISTRIBUTION - HAYWOOD E.M.C.

SEAL 26360 ENGINEER REECE M. SCHULER
NORTH CAROLINA PROFESSIONAL SEAL
8/3/12

Vaughn & Melton
Consulting Engineers
3089 L Beam Road
Charlotte, NC 28217
704 357-0488

STATE OF NORTH CAROLINA DEPARTMENT OF TRANSPORTATION

PREPARED IN THE OFFICE OF
DIVISION OF HIGHWAYS
UTILITIES ENGINEERING SECTION
1591 MAIL SERVICES CENTER
RALEIGH NC 27699-1591
PHONE (919) 250-4128
FAX (919) 250-4119

Roger Worthington, P.E.	UTILITIES SECTION ENGINEER
Xxxxx Xxxxx, P.E	UTILITIES SQUAD LEADER PROJECT ENGINEER
Reece Schuler, PE	UTILITIES PROJECT DESIGNER

09/08/99

SYSTIME = $$$$$ JOB = $$$$$ DGN = $$$$$ TIME = $$$$$

PROJECT REFERENCE NO.	SHEET NO.
BD-51140	U0-2

UTILITIES BY OTHERS

NOTE:
ALL PROPOSED UTILITY WORK SHOWN ON THIS SHEET WILL BE DONE BY OTHERS

V&M
Vaughn & Melton
Consulting Engineers
Charlotte, North Carolina 704 357 7815
Asheville, North Carolina 828-253-2796
Tri-Cities, Tennessee 423-467-540
Knoxville, Tennessee 865-546-6800
Middlesboro, Kentucky 606-248-6600
Spartanburg, South Carolina 864-574-4775

Copyright © 2006 Vaughn & Melton, Inc. All Rights Reserved

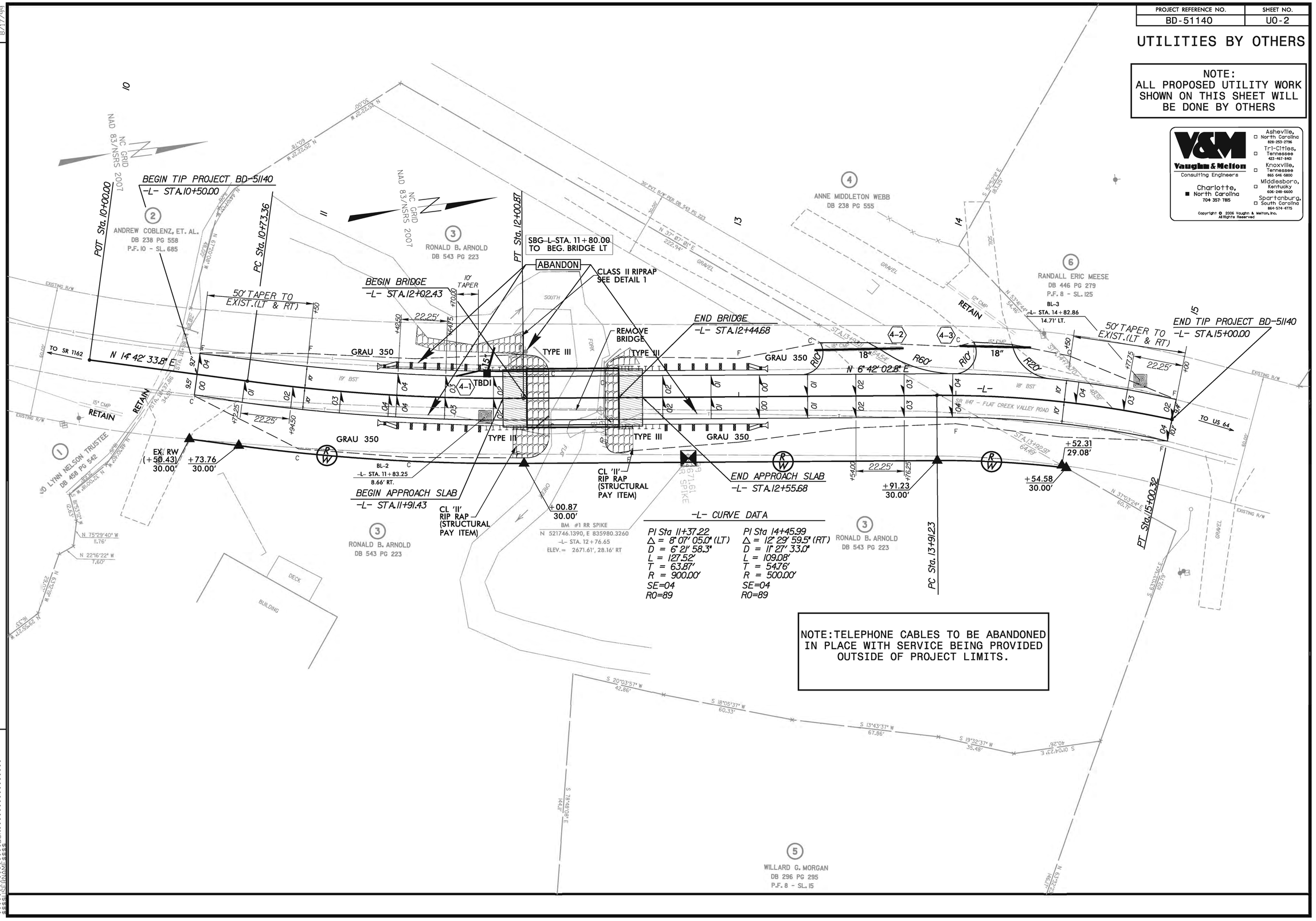

REVISIONS

8/17/09

COMPUTED BY: ACC DATE 10-04-11
CHECKED BY: ACC DATE 10-04-11

PROJECT REFERENCE NO.	SHEET NO.
BD-5114D	X-0

DIVISION OF HIGHWAYS
STATE OF NORTH CAROLINA

CROSS SECTION SUMMARY

IN CUBIC YARDS

NORTH CAROLINA PROFESSIONAL SEAL 030453 ENGINEER AARON C. CARVER 3/14/12

-L- LOCATION	UNCLASSIFIED EXCAVATION	EMBT
10+50	0	0
11+00	35	0
11+50	43	5
12+00	8	27
12+02.43 BEGIN BRIDGE	0	2
12+44.68 END BRIDGE	0	0
12+50	0	5
13+00	1	29
13+50	2	11
14+00	7	5
14+50	9	5
15+00	3	3

NOTE: EMBANKMENT COLUMN DOES NOT INCLUDE BACKFILL FOR UNDERCUT.

Approximate quantities only. Unclassified excavation, borrow excavation, fine grading, clearing and grubbing, and removal of existing pavement will be paid for at the contract lump sum price for "grading".

PROJ. REFERENCE NO.	SHEET NO.
BD-51140	X-1

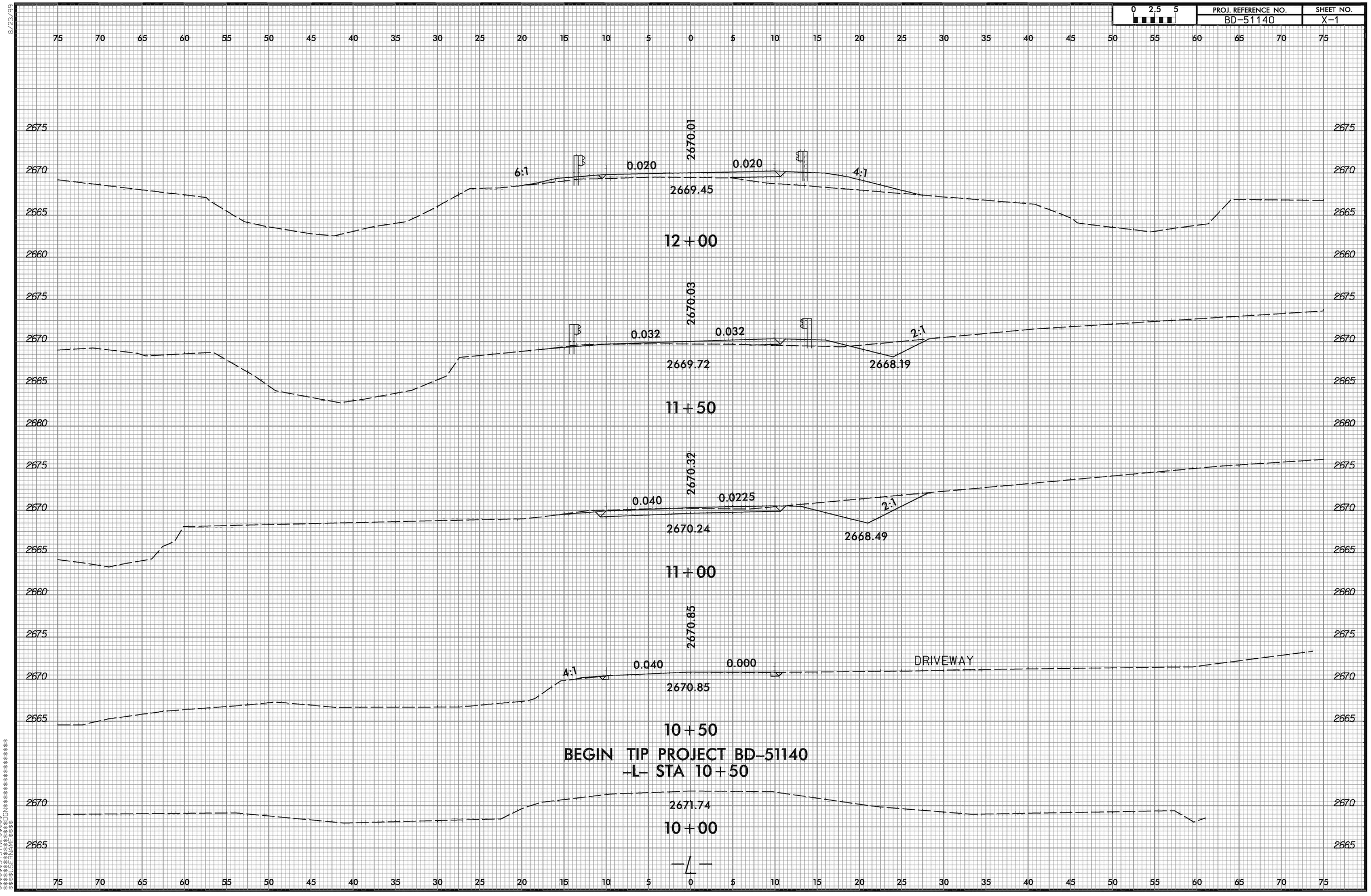

8/23/99

$$$$SYSTIME$$$$
$$$$DGN$$$$
$$$$CELLNAME$$$$

PROJ. REFERENCE NO.	SHEET NO.
BD-5114O	X-2

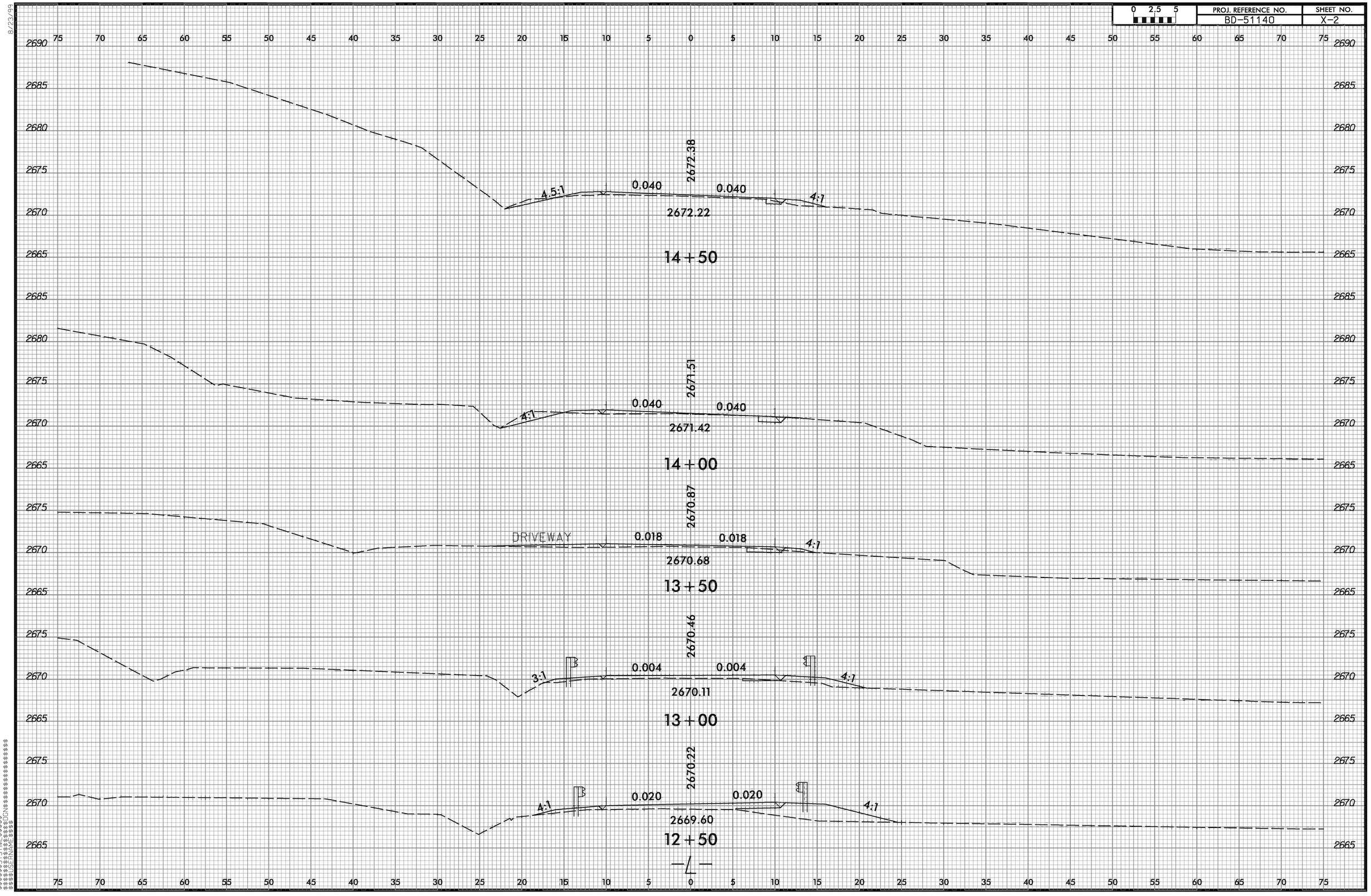

8/23/99

$$$$SYSTIME$$$$
$$$$USERNAME$$$$

8/23/99

0 2.5 5	PROJ. REFERENCE NO.	SHEET NO.
	BD-51140	X-3

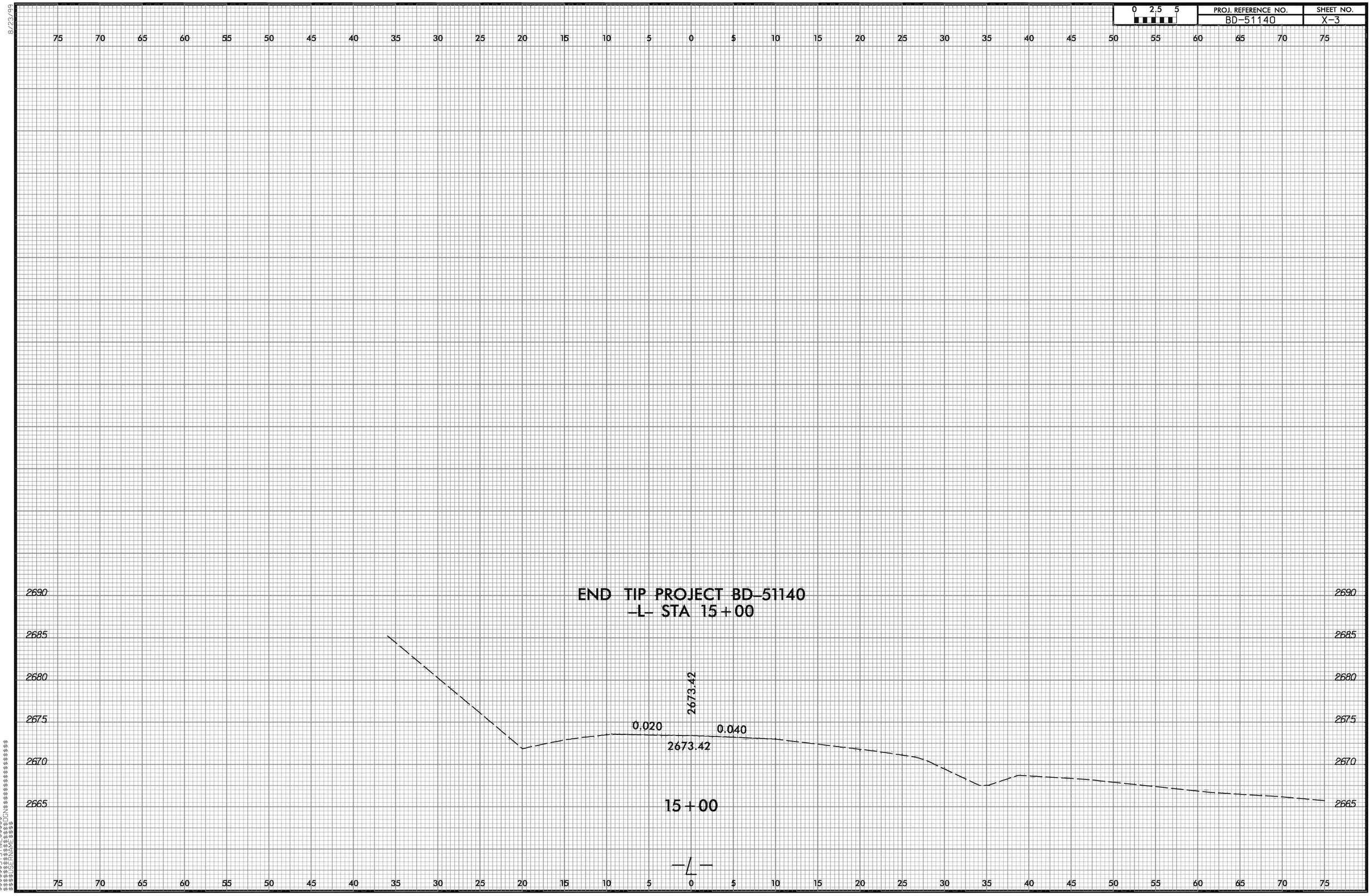

$$$$SYSTIME$$$$
$$$$CN$$$$
$$$$USERNAME$$$$

TIP NO: BD-51140

CONTRACT: DN00082

STATE OF NORTH CAROLINA

DIVISION OF HIGHWAYS

TRANSYLVANIA COUNTY

STATE	STATE PROJECT REFERENCE NO.	SHEET NO.	TOTAL SHEETS
N.C.	BD-5114O		

STATE PROJ. NO.	F.A. PROJ. NO.	DESCRIPTION
45360.1.15	BRZ-1147(14)	P.E.
45360.2.15	BRZ-1147(14)	R/W
45360.3.15	BRZ-1147(14)	CONST.

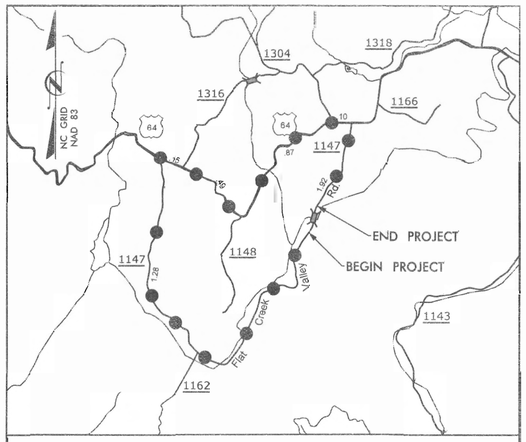

VICINITY MAP

DETOUR ROUTE

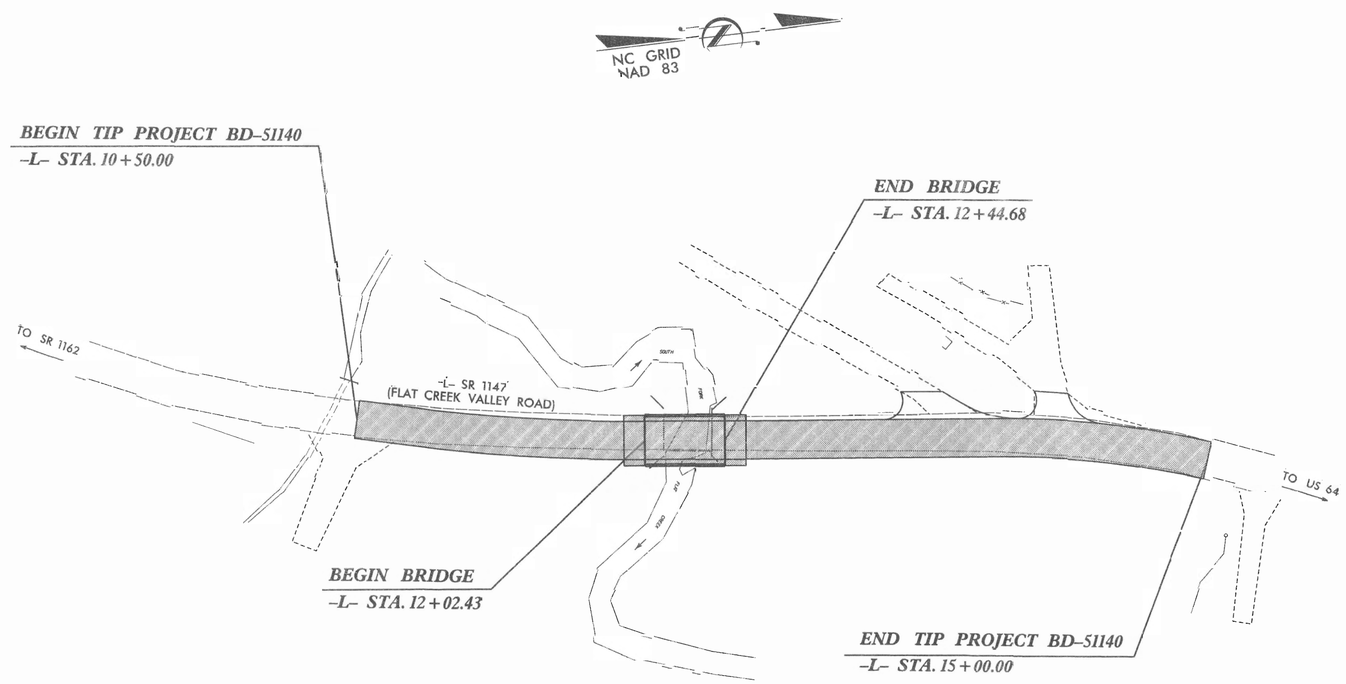

NORTH CAROLINA PROFESSIONAL SEAL 20770 ENGINEER HARDY L. WILLIS 6/9/12

Vaughn & Melton Consulting Engineers
Asheville, North Carolina 828-253-2796
Charlotte, North Carolina 704-357-0488
Tri-Cities, Tennessee 423-467-8401
Knoxville, Tennessee 865-546-5800
Middlesboro, Kentucky 606-248-6600
Spartanburg, South Carolina 864-574-4775

Copyright © 2006 Vaughn & Melton, Inc. All Rights Reserved

STRUCTURES

STATE OF NORTH CAROLINA DEPARTMENT OF TRANSPORTATION

DESIGN DATA

ADT 2009 = 360
ADT 2025 = 720

T = 6 %
V = 45 MPH

FUNC CLASS = LOCAL

PROJECT LENGTH

LENGTH ROADWAY TIP PROJECT BD-5114O = 0.077 MI.
LENGTH STRUCTURE TIP PROJECT BD-5114O = 0.008 MI.
TOTAL LENGTH OF TIP PROJECT BD-5114O = 0.085 MI.

Prepared In the Office of:
VAUGHN & MELTON
1318-F PATTON AVE.
ASHEVILLE NC. 28806
FOR THE NORTH CAROLINA DIVISION OF HIGHWAYS

2012 STANDARD SPECIFICATIONS

LETTING DATE :
SEPT. 25. 2012

REECE SCHULER, PE
PROJECT ENGINEER

AARON CARVER, PE
PROJECT DESIGN ENGINEER

STRUCTURES MANAGEMENT UNIT
1000 BIRCH RIDGE DR.
RALEIGH, N.C. 27610

DIVISION OF HIGHWAYS
STATE OF NORTH CAROLINA

JOSH DEYTON P.E.
STATE DESIGN ENGINEER

DEPARTMENT OF TRANSPORTATION
FEDERAL HIGHWAY ADMINISTRATION

APPROVED
DIVISION ADMINISTRATOR DATE

F. A. PROJECT NO. BRZ-1147(14)

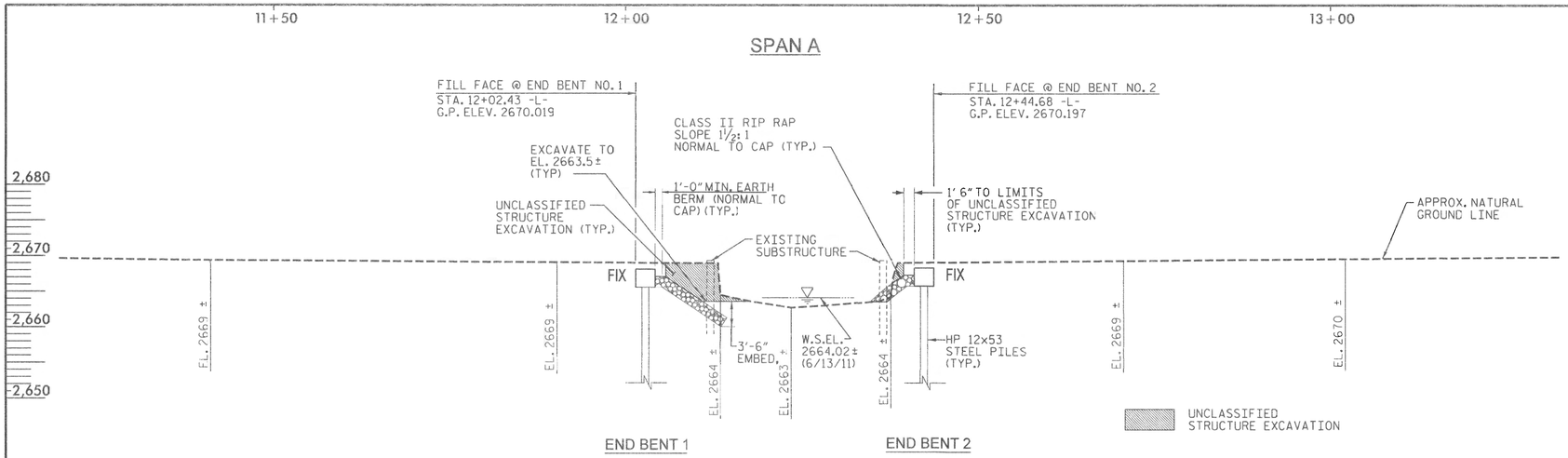

SECTION ALONG ℄ SURVEY -L-

SECTIONS AT END BENTS ARE AT RIGHT ANGLES.

PI STA. = 11+50.00
EL = 2,669.75'
VC = 145'

GRADE DATA -L-

PI Sta 11+37.22
Δ = 8° 07' 05.0" (LT)
D = 6° 21' 58.3"
L = 127.52'
T = 63.87'
R = 900.00'

HORIZONTAL CURVE DATA -L-

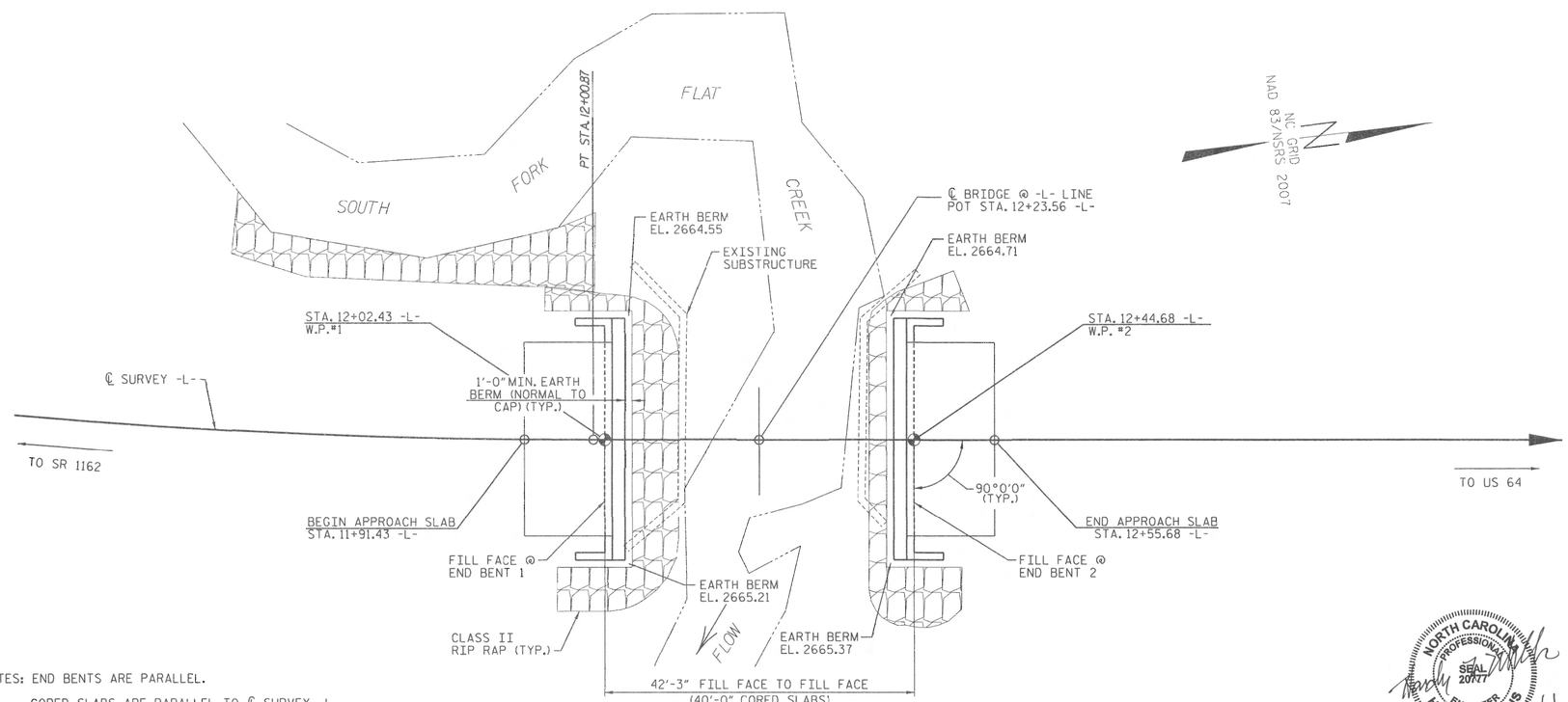

NOTES: END BENTS ARE PARALLEL.

CORED SLABS ARE PARALLEL TO ℄ SURVEY -L-.

PILES ARE NOT SHOWN IN PLAN VIEW FOR CLARITY.

PLAN ALONG ℄ SURVEY -L-

I HEREBY CERTIFY THAT THESE PLANS ARE THE AS-BUILT PLANS.

NORTH CAROLINA PROFESSIONAL SEAL 20177 ENGINEER HARDY L. WILLIS 6/9/12

V&M Vaughn & Melton Consulting Engineers
Asheville, North Carolina 828-253-2796
Charlotte, North Carolina 704-357-0488
Tri-Cities, Tennessee 423-467-8400
Knoxville, Tennessee 865-546-5800
Middlesboro, Kentucky 606-248-6600
Spartanburg, South Carolina 864-574-4775
Copyright © 2006 Vaughn & Melton, Inc. All Rights Reserved

DRAWN BY: MAF DATE: AUG. 2012
CHECKED BY: HLW DATE: AUG. 2012

PROJECT NO. BD-51140
TRANSYLVANIA COUNTY
STATION: 12+23.56 -L-

SHEET 1 OF 2 REPLACES BRIDGE NO. 130

STATE OF NORTH CAROLINA
DEPARTMENT OF TRANSPORTATION
RALEIGH

GENERAL DRAWING
FOR BRIDGE on SR 1147
(FLAT CREEK VALLEY RD.)
over SOUTH FORK FLAT CREEK
between SR 1162 and US 64

REVISIONS						SHEET NO.
NO.	BY:	DATE:	NO.	BY:	DATE:	S-1
1			3			TOTAL SHEETS
2			4			13

-BM 1- N 521746.139 E 835980.326 ELEV. = 2671.61' -L- STATION 12+76.65 28.16' RT

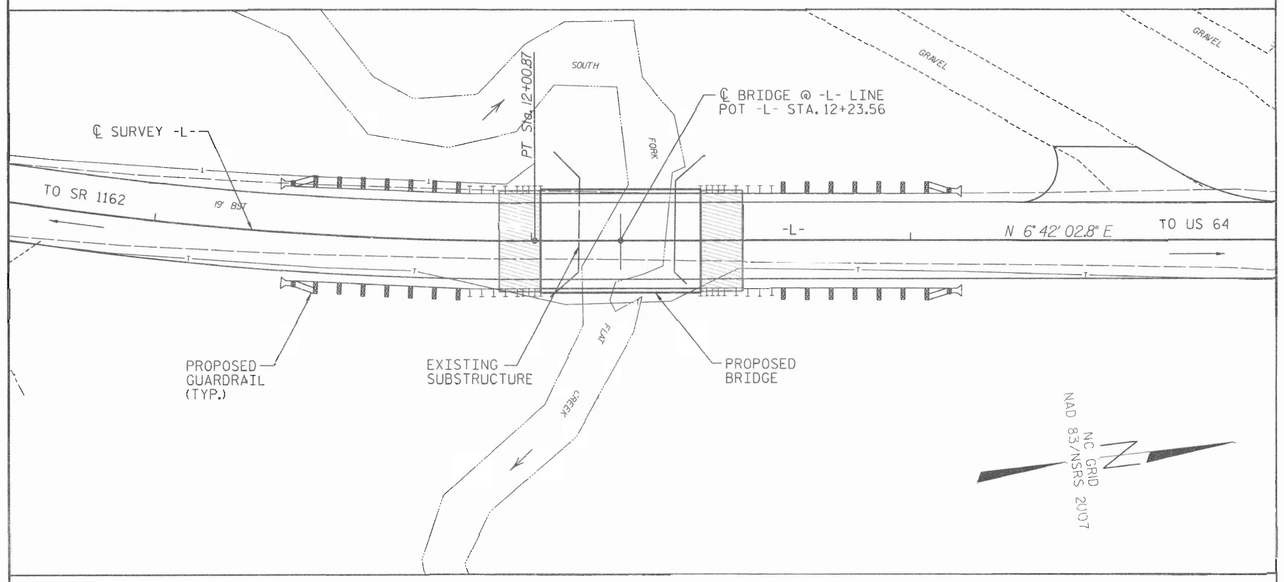

LOCATION SKETCH

GENERAL NOTES:

ASSUMED LIVE LOAD = HL-93 OR ALTERNATE LOADING.

THIS BRIDGE HAS BEEN DESIGNED IN ACCORDANCE WITH THE REQUIREMENTS OF THE AASHTO LRFD BRIDGE DESIGN SPECIFICATIONS.

THIS BRIDGE IS LOCATED IN SEISMIC ZONE 1.

FOR OTHER DESIGN DATA AND GENERAL NOTES, SEE "STANDARD NOTES" SHEET

FOR EROSION CONTROL MEASURES, SEE EROSION CONTROL PLANS

THE EXISTING STRUCTURE, CONSISTING OF A ONE SPAN, 25.5-FOOT LONG TIMBER DECK ON STEEL I-BEAMS, 20-FEET WIDE, ON TIMBER CAP AND PILE END BENTS, AND LOCATED AT THE PROPOSED STRUCTURE, SHALL BE REMOVED. THE EXISTING BRIDGE IS PRESENTLY POSTED BELOW THE LEGAL LOAD LIMIT. SHOULD THE STRUCTURAL INTEGRITY OF THE BRIDGE FURTHER DETERIORATE, THIS LOAD LIMITATION MAY BE REDUCED AS FOUND NECESSARY DURING THE LIFE OF THE PROJECT.

REMOVAL OF THE EXISTING BRIDGE SHALL BE PERFORMED SO AS NOT TO ALLOW DEBRIS TO FALL INTO THE WATER. THE CONTRACTOR SHALL REMOVE THE BRIDGE AND SUBMIT PLANS FOR DEMOLITION IN ACCORDANCE WITH ARTICLE 402-2 OF THE STANDARD SPECIFICATIONS.

THE SUBSTRUCTURE OF THE EXISTING BRIDGE INDICATED ON THE PLANS IS FROM THE BEST INFORMATION AVAILABLE. SINCE THIS INFORMATION IS SHOWN FOR THE CONVENIENCE OF THE CONTRACTOR, THE CONTRACTOR SHALL HAVE NO CLAIM WHATSOEVER AGAINST THE DEPARTMENT OF TRANSPORTATION FOR ANY DELAYS OR ADDITIONAL COST INCURRED BASED ON DIFFERENCES BETWEEN THE EXISTING BRIDGE SUBSTRUCTURE SHOWN ON THE PLANS AND THE ACTUAL CONDITIONS AT THE PROJECT SITE.

THIS STRUCTURE HAS BEEN DESIGNED IN ACCORDANCE WITH HEC 18, "EVALUATING SCOUR AT BRIDGES", MAY 2001.

FOR SUBMITTAL OF WORKING DRAWINGS, SEE SPECIAL PROVISIONS.

FOR FALSEWORK AND FORMWORK, SEE SPECIAL PROVISIONS.

FOR CRANE SAFETY, SEE SPECIAL PROVISIONS.

FOR GROUT FOR STRUCTURES, SEE SPECIAL PROVISIONS.

THE MATERIAL SHOWN IN THE CROSS-HATCHED AREA SHALL BE EXCAVATED FOR A DISTANCE OF 25 FT. EACH SIDE OF CENTERLINE ROADWAY AS DIRECTED BY THE ENGINEER. THIS WORK WILL BE PAID FOR AT THE CONTRACT LUMP SUM PRICE FOR UNCLASSIFIED STRUCTURE EXCAVATION. SEE SECTION 412 OF THE STANDARD SPECIFICATIONS.

ASPHALT WEARING SURFACE IS INCLUDED IN ROADWAY QUANTITY ON ROADWAY PLANS.

THE CONTRACTOR SHALL PROVIDE INDEPENDENT ASSURANCE SAMPLES OF REINFORCING STEEL AS FOLLOWS: FOR PROJECTS REQUIRING UP TO 400 TONS OF REINFORCING STEEL, ONE 30 INCH SAMPLE OF EACH SIZE BAR USED. THE BARS FROM WHICH THE SAMPLES ARE TAKEN MUST THEN BE SPLICED WITH REPLACEMENT BARS OF THE SIZE AND LENGTH OF THE SAMPLE, PLUS A MINIMUM LAP SPLICE OF 30 BAR DIAMETERS. PAYMENT FOR THE SAMPLES OF REINFORCING STEEL SHALL BE CONSIDERED INCIDENTAL TO VARIOUS PAY ITEMS.

INASMUCH AS THE PAINT SYSTEM ON THE EXISTING STRUCTURAL STEEL CONTAINS LEAD, THE CONTRACTOR'S ATTENTION IS DIRECTED TO ARTICLE 107-1 OF THE STANDARD SPECIFICATIONS. ANY COSTS RESULTING FROM COMPLIANCE WITH APPLICABLE STATE OR FEDERAL REGULATIONS PERTAINING TO HANDLING OF MATERIALS CONTAINING LEAD BASED PAINT SHALL BE INCLUDED IN THE BID PRICE FOR "REMOVAL OF EXISTING STRUCTURE AT STATION 12+23.56."

FOR PILES, SEE SECTION 450 OF THE STANDARD SPECIFICATIONS.

PILES AT END BENT NO. 1 ARE DESIGNED FOR A FACTORED RESISTANCE OF 70 TONS PER PILE.

DRIVE PILES AT END BENT NO. 1 TO A REQUIRED DRIVING RESISTANCE OF 117 TONS PER PILE.

PILES AT END BENT NO. 2 ARE DESIGNED FOR A FACTORED RESISTANCE OF 70 TONS PER PILE.

DRIVE PILES AT END BENT NO. 2 TO A REQUIRED DRIVING RESISTANCE OF 117 TONS PER PILE.

TOTAL BILL OF MATERIAL

	REMOVAL OF EXISTING STRUCTURE	UNCLASSIFIED STRUCTURE EXCAVATION	CLASS A CONCRETE	BRIDGE APPROACH SLABS	REINFORCING STEEL	HP 12 X 53 STEEL PILES		VERTICAL CONCRETE BARRIER RAIL	RIP RAP CLASS II (2'-0" THICK)	GEOTEXTILE FOR DRAINAGE	ELASTOMERIC BEARINGS	3'-0" x 1'-9" PRESTRESSED CONCRETE CORED SLAB UNIT	
	LUMP SUM	LUMP SUM	CU. YARDS	LUMP SUM	LBS.	NO.	LIN. FT.	LIN. FT.	TONS	SQ. YARDS	LUMP SUM	NO.	LIN. FT.
SUPERSTRUCTURE								80.25			LUMP SUM	9	360.0
END BENT 1			12.4		1847	5	205		110	122			
END BENT 2			12.4		1847	5	240		85	95			
TOTAL	LUMP SUM	LUMP SUM	24.8	LUMP SUM	3694	10	445	80.25	195	217	LUMP SUM	9	360.0

HYDRAULIC DATA

DESIGN DISCHARGE	= 1020 CFS
DESIGN FREQUENCY	= 25 YRS
DESIGN HW ELEVATION	= 2671.32 FT
BASE DISCHARGE	= 1560 CFS
BASE FREQUENCY	= 100 YRS
BASE HW ELEVATION	= 2672.14 FT

OVERTOPPING FLOOD DATA

OVERTOPPING DISCHARGE	= 494 CFS
OVERTOPPING FREQUENCY	= 10 (-) YRS
OVERTOPPING ELEVATION	= 2669.90 FT
DRAINAGE AREA	= 3.27 SQ. MI.

PROJECT NO. BD-51140

TRANSYLVANIA COUNTY

STATION: 12+23.56 -L-

SHEET 2 OF 2

NORTH CAROLINA PROFESSIONAL SEAL 20777 ENGINEER HARDY L. WILLIS 8/9/12

V&M Vaughn & Melton Consulting Engineers
Asheville, North Carolina 828-253-2796
Charlotte, North Carolina 704-291-1966
Tri-Cities, Tennessee 423-467-840
Knoxville, Tennessee 865-546-3802
Middlesboro, Kentucky 606-248-6606
Spartanburg, South Carolina 864-574-4775
Copyright © 2006 Vaughn & Melton, Inc. All Rights Reserved

STATE OF NORTH CAROLINA
DEPARTMENT OF TRANSPORTATION
RALEIGH

GENERAL DRAWING
FOR BRIDGE on SR 1147
(FLAT CREEK VALLEY RD.)
over SOUTH FORK FLAT CREEK
between SR 1162 and US 64

DRAWN BY: MAT DATE: AUG. 2012
CHECKED BY: HLW DATE: AUG. 2012

REVISIONS								SHEET NO.
NO.	BY:	DATE:	NO.	BY:	DATE:			S-2
1			3					TOTAL SHEETS
2			4					13

LOAD AND RESISTANCE FACTOR RATING (LRFD) SUMMARY FOR PRESTRESSED CONCRETE GIRDERS

LEVEL		VEHICLE	WEIGHT (W) (TONS)	CONTROLLING LOAD RATING	MINIMUM RATING FACTORS (RF)	TONS = W X RF	STRENGTH I LIMIT STATE											SERVICE III LIMIT STATE						COMMENT NUMBER
							LIVELOAD FACTORS	MOMENT					SHEAR					LIVELOAD FACTORS	MOMENT					
								DISTRIBUTION FACTORS (DF)	RATING FACTOR	SPAN	GIRDER LOCATION	DISTANCE FROM LEFT END OF SPAN (ft)	DISTRIBUTION FACTORS (DF)	RATING FACTOR	SPAN	GIRDER LOCATION	DISTANCE FROM LEFT END OF SPAN (ft)		DISTRIBUTION FACTORS (DF)	RATING FACTOR	SPAN	GIRDER LOCATION	DISTANCE FROM LEFT END OF SPAN (ft)	
DESIGN LOAD RATING		HL-93(Inv)	N/A	1	1.319	--	1.75	0.278	1.76	40'	EL	19.5	0.549	**1.32**	40'	EL	**1.95**	0.80	0.278	1.55	40'	EL	19.5	
		HL-93(Opr)	N/A	--	1.709	--	1.35	0.278	2.28	40'	EL	19.5	0.549	1.71	40'	EL	1.95	N/A	--	--	--	--	--	
		HS-20(Inv)	36.000	2	1.54	55.449	1.75	0.278	2.21	40'	EL	19.5	0.549	**1.54**	40'	EL	**1.95**	0.80	0.278	1.94	40'	EL	19.5	
		HS-20(Opr)	36.000	--	1.997	71.878	1.35	0.278	2.86	40'	EL	19.5	0.549	2	40'	EL	1.95	N/A	--	--	--	--	--	
LEGAL LOAD RATING	SV	SNSH	13.500	--	3.606	48.687	1.4	0.278	5.1	40'	EL	19.5	0.549	4.13	40'	EL	1.95	0.80	0.278	3.61	40'	EL	19.5	
		SNGARBS2	20.000	--	2.964	59.289	1.4	0.278	4.19	40'	EL	15.6	0.549	3.07	40'	EL	1.95	0.80	0.278	2.96	40'	EL	19.5	
		SNAGRIS2	22.000	--	2.906	63.929	1.4	0.278	4.09	40'	EL	15.6	0.549	2.91	40'	EL	1.95	0.80	0.278	2.92	40'	EL	15.6	
		SNCOTTS3	27.250	--	1.803	49.125	1.4	0.278	2.55	40'	EL	19.5	0.549	2.07	40'	EL	1.95	0.80	0.278	1.80	40'	EL	19.5	
		SNAGGRS4	34.925	--	1.623	56.667	1.4	0.278	2.29	40'	EL	19.5	0.549	1.82	40'	EL	1.95	0.80	0.278	1.62	40'	EL	19.5	
		SNS5A	35.550	--	1.578	56.107	1.4	0.278	2.23	40'	EL	19.5	0.549	1.9	40'	EL	1.95	0.80	0.278	1.58	40'	EL	19.5	
		SNS6A	39.950	--	1.502	59.992	1.4	0.278	2.12	40'	EL	19.5	0.549	1.77	40'	EL	1.95	0.80	0.278	1.50	40'	EL	19.5	
		SNS7B	42.000	3	1.432	60.149	1.4	0.278	2.02	40'	EL	19.5	0.549	1.81	40'	EL	1.95	0.80	0.278	**1.43**	40'	EL	**19.5**	
	TTST	TNAGRIT3	33.000	--	1.848	60.976	1.4	0.278	2.61	40'	EL	19.5	0.549	2.08	40'	EL	1.95	0.80	0.278	1.85	40'	EL	19.5	
		TNT4A	33.075	--	1.872	61.901	1.4	0.278	2.65	40'	EL	19.5	0.549	1.98	40'	EL	1.95	0.80	0.278	1.87	40'	EL	19.5	
		TNT6A	41.600	--	1.587	66.032	1.4	0.278	2.24	40'	EL	19.5	0.549	1.94	40'	EL	1.95	0.80	0.278	1.59	40'	EL	19.5	
		TNT7A	42.000	--	1.627	68.354	1.4	0.278	2.3	40'	EL	19.5	0.549	1.79	40'	EL	1.95	0.80	0.278	1.63	40'	EL	19.5	
		TNT7B	42.000	--	1.664	69.888	1.4	0.278	2.35	40'	EL	19.5	0.549	1.72	40'	EL	1.95	0.80	0.278	1.66	40'	EL	19.5	
		TNAGRIT4	43.000	--	1.619	69.61	1.4	0.278	2.28	40'	EL	15.6	0.549	1.65	40'	EL	1.95	0.80	0.278	1.62	40'	EL	19.5	
		TNAGT5A	45.000	--	1.498	67.412	1.4	0.278	2.12	40'	EL	19.5	0.549	1.71	40'	EL	1.95	0.80	0.278	1.50	40'	EL	19.5	
		TNAGT5B	45.000	--	1.455	65.486	1.4	0.278	2.06	40'	EL	19.5	0.549	1.56	40'	EL	1.95	0.80	0.278	1.46	40'	EL	19.5	

LOAD FACTORS:

DESIGN LOAD RATING FACTORS	LIMIT STATE	γ_{DC}	γ_{DW}
	STRENGTH I	1.25	1.50
	SERVICE III	1.00	1.00

NOTES:

MINIMUM RATING FACTORS ARE BASED ON THE STRENGTH I AND SERVICE III LIMIT STATES.

ALLOWABLE STRESSES FOR SERVICE III LIMIT STATE ARE AS REQUIRED FOR DESIGN.

COMMENTS:

1.
2.
3.
4.

CONTROLLING LOAD RATING

1 DESIGN LOAD RATING (HL-93)
2 DESIGN LOAD RATING (HS-20)
3 LEGAL LOAD RATING **

** SEE CHART FOR VEHICLE TYPE

GIRDER LOCATION

I - INTERIOR GIRDER
EL - EXTERIOR LEFT GIRDER
ER - EXTERIOR RIGHT GIRDER

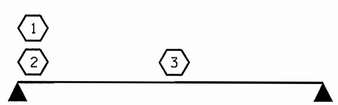

LRFR SUMMARY

FOR SPAN 'A'

NOTE:SPAN DIMENSIONS ARE FROM ℄ BEARING TO ℄ BEARING

PROJECT NO. BD-51140
TRANSYLVANIA COUNTY
STATION: 12+23.56 -L-

STATE OF NORTH CAROLINA
DEPARTMENT OF TRANSPORTATION
RALEIGH

STANDARD
LRFR SUMMARY FOR 40' CORED SLAB UNIT 90° SKEW
(NON-INTERSTATE TRAFFIC)

NORTH CAROLINA PROFESSIONAL SEAL 15779 ENGINEER JOHN R. DUGGINS, JR.
5/18/12

REVISIONS								SHEET NO.
NO.	BY:	DATE:	NO.	BY:	DATE:			S-3
1			3					TOTAL SHEETS
2			4					13

ASSEMBLED BY :	R.Z. DEAN	DATE :	12/2011
CHECKED BY :	J.R. DUGGINS	DATE :	12/2011
DRAWN BY :	CVC	6/10	
CHECKED BY :	DNS	6/10	

18-MAY-2012 08:35
S:\DPG4\John\LIBR_Files\BD-51140\Final_Plans\BD-51140_SD_LRFR.dgn
jduggins

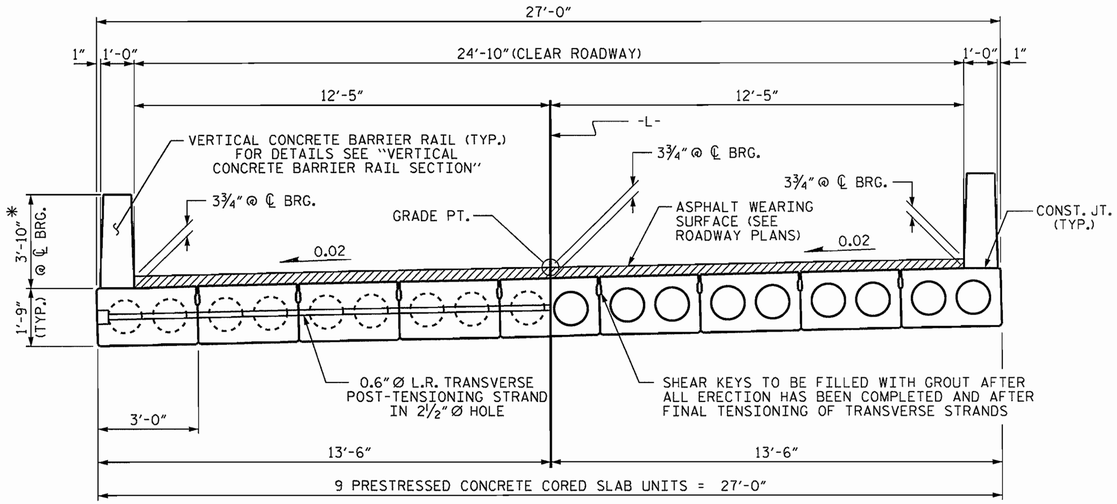

HALF SECTION
AT INTERMEDIATE DIAPHRAGMS

TYPICAL SECTION

HALF SECTION
THROUGH VOIDS

* - THE MAXIMUM BARRIER RAIL HEIGHT AND ASPHALT THICKNESS IS SHOWN. THE HEIGHT OF THE BARRIER RAIL AND ASPHALT THICKNESS VARIES WHILE THE TOP OF THE BARRIER RAIL FOLLOWS THE PROFILE OF THE GUTTERLINE. FOR RAIL HEIGHT DETAILS AND ASPHALT THICKNESS SEE THE "VERTICAL CONCRETE BARRIER RAIL SECTION" DETAIL.

FIXED END

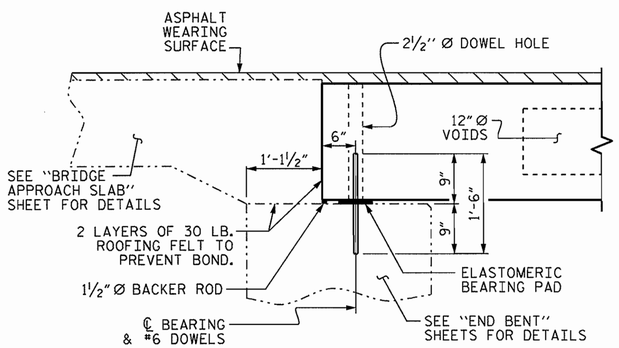

SECTION AT END BENT

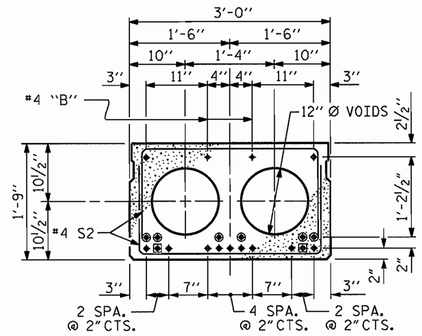

STRAND LAYOUT FOR 40' UNIT
(13 STRANDS REQUIRED)

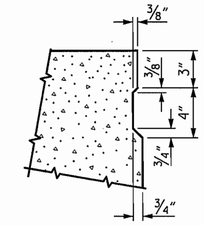

SHEAR KEY DETAIL

NOTE: OMIT SHEAR KEY ON OUTSIDE FACE OF EXTERIOR CORED SLABS.

▲ BOND SHALL BE BROKEN ON THESE STRANDS FOR A DISTANCE OF 6'-0" FROM END OF CORED SLAB UNIT. SEE STANDARD SPECIFICATIONS, ARTICLE 1078-7.

■ BOND SHALL BE BROKEN ON THESE STRANDS FOR A DISTANCE OF 2'-0" FROM END OF CORED SLAB UNIT. SEE STANDARD SPECIFICATIONS, ARTICLE 1078-7.

◉ OPTIONAL FULL LENGTH DEBONDED STRANDS. THESE STRANDS ARE NOT REQUIRED. IF THE FABRICATOR CHOOSES TO INCLUDE THESE STRANDS IN THE CORED SLAB UNIT, THE STRANDS SHALL BE DEBONDED FOR THE FULL LENGTH OF THE UNIT AT NO ADDITIONAL COST. SEE STANDARD SPECIFICATIONS, ARTICLE 1078-7.

DEBONDING LEGEND

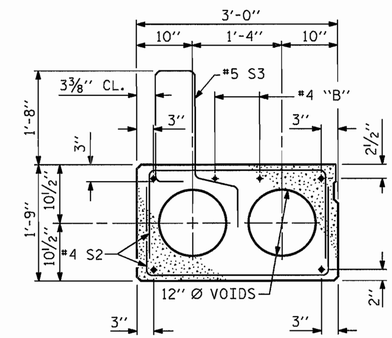

EXTERIOR SLAB SECTION
(FOR PRESTRESSED STRAND LAYOUT, SEE INTERIOR SLAB SECTION.)

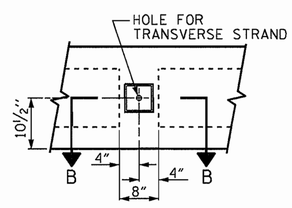

ELEVATION VIEW

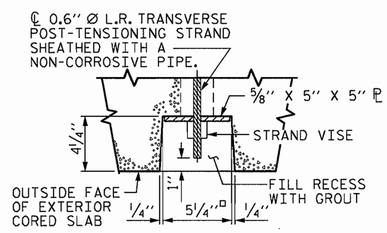

SECTION B-B

GROUTED RECESS AT END OF POST-TENSIONED STRAND OF CORED SLABS

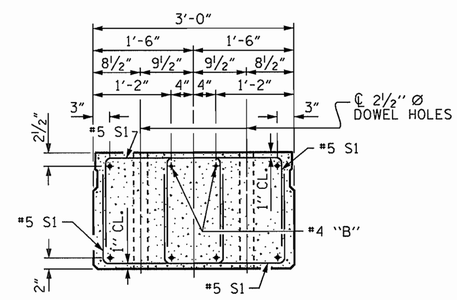

END ELEVATION

SHOWING PLACEMENT OF DOUBLE STIRRUPS AND LOCATION OF DOWEL HOLES. (STRAND LAYOUT NOT SHOWN.) INTERIOR SLAB UNIT SHOWN-EXTERIOR SLAB UNIT SIMILAR EXCEPT SHEAR KEY LOCATION.

PROJECT NO. BD-51140
TRANSYLVANIA COUNTY
STATION: 12+23.56 -L-

SHEET 1 OF 3

STATE OF NORTH CAROLINA
DEPARTMENT OF TRANSPORTATION
RALEIGH

STANDARD
3'-0" X 1'-9"
PRESTRESSED CONCRETE
CORED SLAB UNIT
90° SKEW

NORTH CAROLINA PROFESSIONAL SEAL 15779 ENGINEER JOHN R. DUGGINS, JR.
5/18/12

REVISIONS						SHEET NO.
NO.	BY:	DATE:	NO.	BY:	DATE:	S-4
1			3			TOTAL SHEETS
2			4			13

ASSEMBLED BY : R.Z. DEAN	DATE : 12/2011
CHECKED BY : J.R. DUGGINS	DATE : 12/2011
DRAWN BY : DGE 5/09	
CHECKED BY : BCH 6/09	

18-MAY-2012 08:33
S:\DPG4\John\LIBR_Files\BD-51140\Final_Plans\BD-51140_SD_CS.dgn
jdugginS

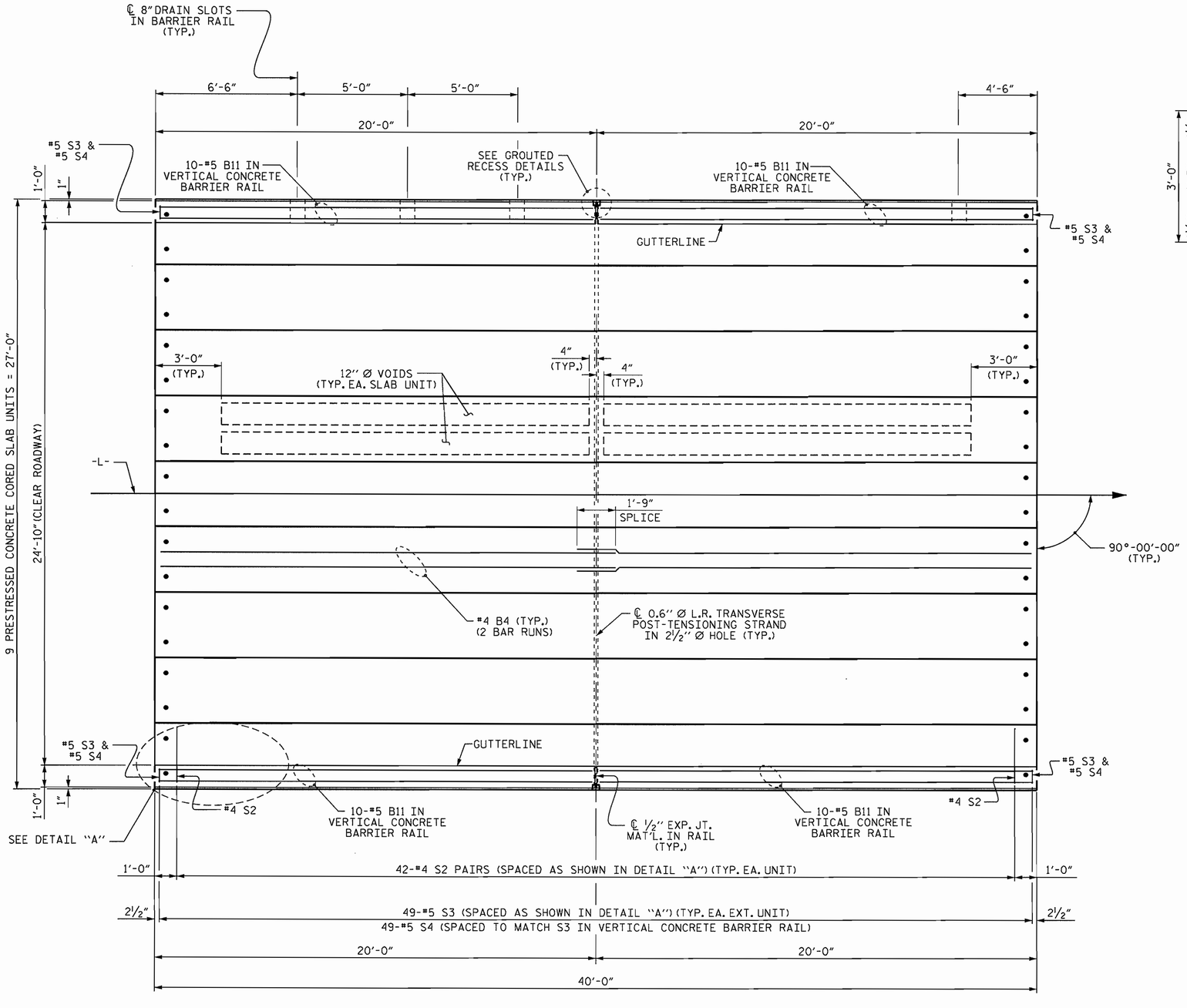

PLAN OF UNIT

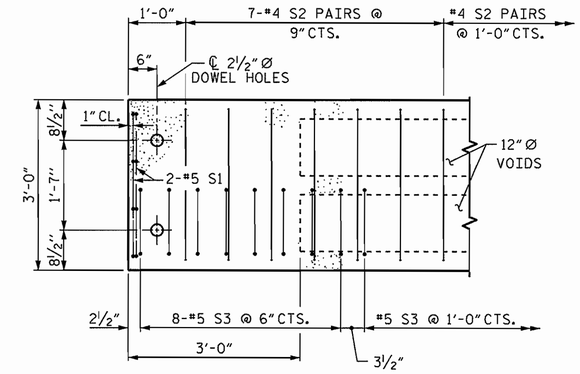

DETAIL "A"

NOTE: EXTERIOR UNIT SHOWN - INTERIOR UNIT SIMILAR EXCEPT OMIT #5 S3 BARS.

PROJECT NO. BD-51140

TRANSYLVANIA COUNTY

STATION: 12+23.56 -L-

SHEET 2 OF 3

STATE OF NORTH CAROLINA
DEPARTMENT OF TRANSPORTATION
RALEIGH

PLAN OF 40' UNIT
24'-10" CLEAR ROADWAY
90° SKEW

NORTH CAROLINA PROFESSIONAL SEAL 15779 ENGINEER JOHN R. DUGGINS, JR.
5/18/12

REVISIONS						SHEET NO.
NO.	BY:	DATE:	NO.	BY:	DATE:	S-5
1			3			TOTAL SHEETS
2			4			13

ASSEMBLED BY : R.Z. DEAN	DATE : 12/2011
CHECKED BY : J.R. DUGGING	DATE : 12/2011
DRAWN BY : DGE 5/09	
CHECKED BY : BCH 6/09	

18-MAY-2012 08:33
S:\DPG4\John\LIBR_Files\BD-51140\Final_Plans\BD-51140_SD_CS.dgn
jduggins

GRADE 270 STRANDS	0.6"Ø L.R.
AREA (SQUARE INCHES)	0.217
ULTIMATE STRENGTH (LBS. PER STRAND)	58,600
APPLIED PRESTRESS (LBS. PER STRAND)	43,950

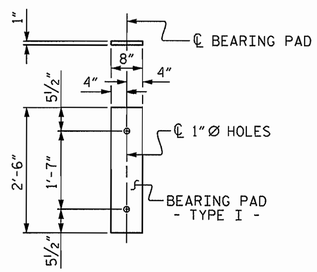

FIXED END
(TYPE I - 18 REQ'D)

ELASTOMERIC BEARING DETAILS

ELASTOMER IN ALL BEARINGS SHALL BE 50 DUROMETER HARDNESS.

BILL OF MATERIAL FOR ONE 40' CORED SLAB UNIT

				EXTERIOR UNIT		INTERIOR UNIT	
BAR	NUMBER	SIZE	TYPE	LENGTH	WEIGHT	LENGTH	WEIGHT
B4	4	#4	STR	20'-9"	55	20'-9"	55
S1	8	#5	3	4'-3"	35	4'-3"	35
S2	84	#4	3	5'-4"	299	5'-4"	299
✱ S3	49	#5	1	6'-2"	315		
REINFORCING STEEL			LBS.		389		389
✱ EPOXY COATED REINFORCING STEEL			LBS.		315		
6500 P.S.I. CONCRETE			CU. YDS.		5.8		5.8
0.6"Ø L.R. STRANDS			No.		13		13

DEAD LOAD DEFLECTION AND CAMBER

	3'-0" x 1'-9"
40' CORED SLAB UNIT	0.6"Ø L.R. STRAND
CAMBER (SLAB ALONE IN PLACE)	1¼" ↑
DEFLECTION DUE TO SUPERIMPOSED DEAD LOAD✱✱	⅛" ↓
FINAL CAMBER	1⅛" ↑

✱✱ INCLUDES FUTURE WEARING SURFACE

BAR TYPES

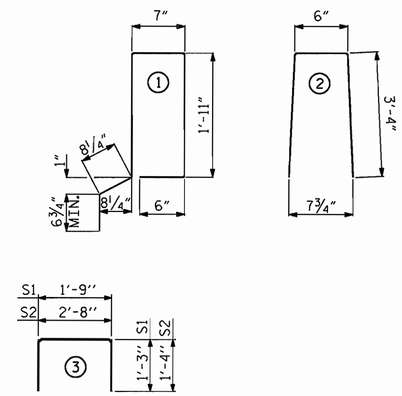

ALL BAR DIMENSIONS ARE OUT TO OUT

CONCRETE RELEASE STRENGTH

UNIT	PSI
40' UNITS	4000

CORED SLABS REQUIRED

	NUMBER	LENGTH	TOTAL LENGTH
40' UNIT			
EXTERIOR C.S.	2	40'-0"	80'-0"
INTERIOR C.S.	7	40'-0"	280'-0"
TOTAL	9		360'-0"

GUTTERLINE ASPHALT THICKNESS & RAIL HEIGHT

25'-10" CLEAR ROADWAY	ASPHALT OVERLAY THICKNESS	RAIL HEIGHT
	@ MID-SPAN	@ MID-SPAN
	SUPERED SECTION	
40' UNITS	2⅝"	3'-8⅞"

NOTES

ALL PRESTRESSING STRANDS SHALL BE 7-WIRE LOW RELAXATION GRADE 270 STRANDS AND SHALL CONFORM TO AASHTO M203 EXCEPT FOR SAMPLING REQUIREMENTS WHICH SHALL BE IN ACCORDANCE WITH THE STANDARD SPECIFICATIONS.

ALL REINFORCING STEEL CAST WITH THE CORED SLAB SECTIONS SHALL BE GRADE 60 AND SHALL BE INCLUDED IN THE UNIT PRICE BID FOR PRESTRESSED CONCRETE CORED SLABS.

RECESSES FOR TRANSVERSE STRANDS SHALL BE GROUTED AFTER THE TENSIONING OF THE STRANDS.

THE 2½"Ø DOWEL HOLES AT FIXED ENDS OF SLAB SECTIONS SHALL BE FILLED WITH NON-SHRINK GROUT.

THE BACKER RODS SHALL CONFORM TO THE REQUIREMENTS OF TYPE M BOND BREAKER. SEE SECTION 1028 OF THE STANDARD SPECIFICATIONS.

WHEN CORED SLABS ARE CAST, AN INTERNAL HOLD-DOWN SYSTEM SHALL BE EMPLOYED TO PREVENT VOIDS FROM RISING OR MOVING SIDEWAYS. AT LEAST SIX WEEKS PRIOR TO CASTING CORED SLABS, THE CONTRACTOR SHALL SUBMIT TO THE ENGINEER FOR REVIEW AND COMMENT, DETAILED DRAWINGS OF THE PROPOSED HOLD-DOWN SYSTEM. IN ADDITION TO STRUCTURAL DETAILS, LOCATION AND SPACING OF THE HOLD-DOWNS SHALL BE INDICATED.

ALL REINFORCING STEEL IN THE VERTICAL CONCRETE BARRIER RAIL SHALL BE EPOXY COATED.

PRESTRESSING STRANDS SHALL BE CUT FLUSH WITH THE CORED SLAB UNIT ENDS.

APPLY EPOXY PROTECTIVE COATING TO CORED SLAB UNIT ENDS.

GROOVED CONTRACTION JOINTS, ½" IN DEPTH, SHALL BE TOOLED IN ALL EXPOSED FACES OF THE BARRIER RAIL AND IN ACCORDANCE WITH ARTICLE 825-10(B) OF THE STANDARD SPECIFICATIONS. A CONTRACTION JOINT SHALL BE LOCATED AT EACH THIRD POINT BETWEEN BARRIER RAIL EXPANSION JOINTS. ONLY ONE CONTRACTION JOINT IS REQUIRED AT MIDPOINT OF BARRIER RAIL SEGMENTS LESS THAN 20 FEET IN LENGTH AND NO CONTRACTION JOINTS ARE REQUIRED FOR THOSE SEGMENTS LESS THAN 10 FEET IN LENGTH.

TRANSVERSE POST TENSIONING OF THE CORED SLAB UNITS SHALL BE DONE IN ACCORDANCE WITH THE STANDARD SPECIFICATIONS.

THE TRANSFER OF LOAD FROM THE ANCHORAGES TO THE CORED SLAB UNIT SHALL BE DONE WHEN THE CONCRETE HAS REACHED A COMPRESSIVE STRENGTH OF NOT LESS THAN THE REQUIRED STRENGTH SHOWN IN THE "CONCRETE RELEASE STRENGTH" TABLE.

FOR GROUT FOR STRUCTURES, SEE SPECIAL PROVISIONS.

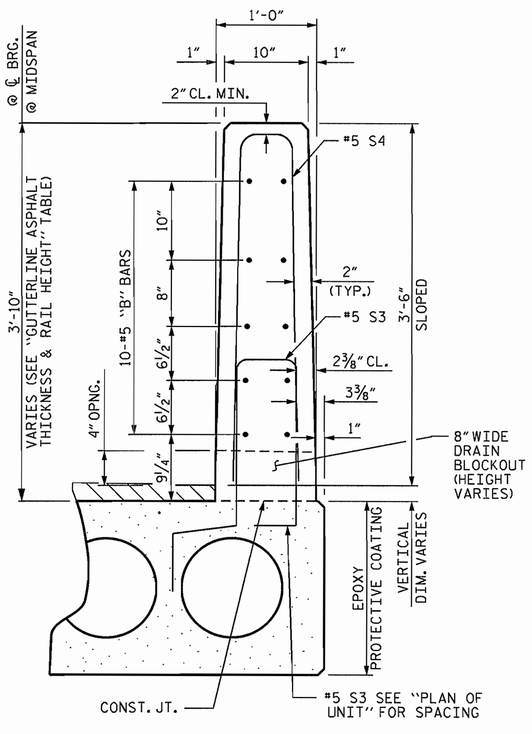

VERTICAL CONCRETE BARRIER RAIL SECTION

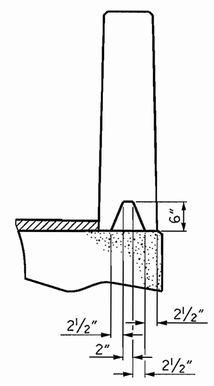

SECTION S-S
AT DAM IN OPEN JOINT
(THIS IS TO BE USED ONLY WHEN SLIP FORM IS USED)

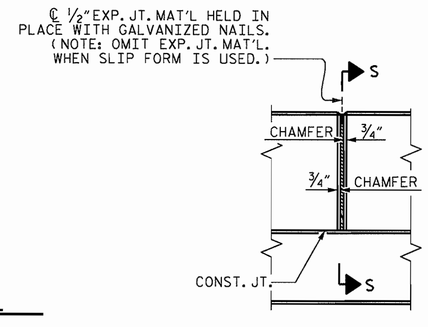

ELEVATION AT EXPANSION JOINTS

BILL OF MATERIAL FOR VERTICAL CONCRETE BARRIER RAIL

BAR	BARS PER PAIR OF EXTERIOR UNITS	SIZE	TYPE	LENGTH	WEIGHT
	40' UNIT				
✱ B11	40	#5	STR	19'-7"	817
✱ S4	98	#5	2	7'-2"	733
✱ EPOXY COATED REINFORCING STEEL			LBS.		1550
CLASS AA CONCRETE			CU.YDS.		10.5
TOTAL VERTICAL CONCRETE BARRIER RAIL			LN. FT.		80.25

PROJECT NO. BD-51140
TRANSYLVANIA COUNTY
STATION: 12+23.56 -L-

SHEET 3 OF 3

STATE OF NORTH CAROLINA
DEPARTMENT OF TRANSPORTATION
RALEIGH

STANDARD
3'-0" X 1'-9"
PRESTRESSED CONCRETE
CORED SLAB UNIT
90° SKEW

NORTH CAROLINA PROFESSIONAL SEAL 15779 ENGINEER JOHN R. DUGGINS, JR.
5/18/12

REVISIONS						SHEET NO.
NO.	BY:	DATE:	NO.	BY:	DATE:	S-6
1			3			TOTAL SHEETS
2			4			13

ASSEMBLED BY : R.Z. DEAN	DATE : 12/2011
CHECKED BY : J.R. DUGGINS	DATE : 12/2011
DRAWN BY : DGE 5/09	
CHECKED BY : BCH 6/09	

18-MAY-2012 08:32
S:\DPG4\John\LIBR_Files\BD-51140\Final_Plans\BD-51140_SD_CS.dgn
jduggins

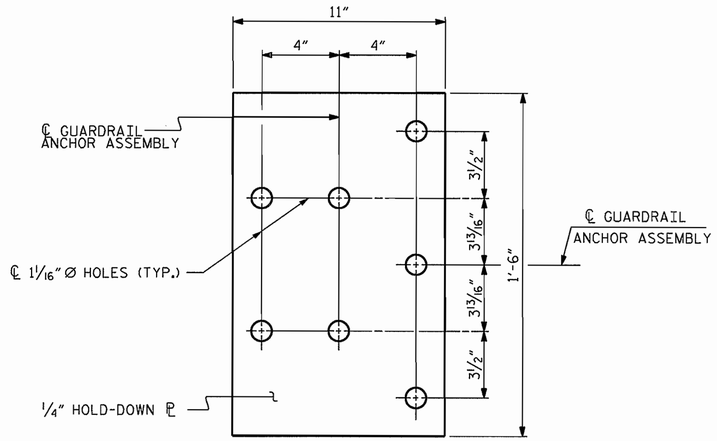

PLAN

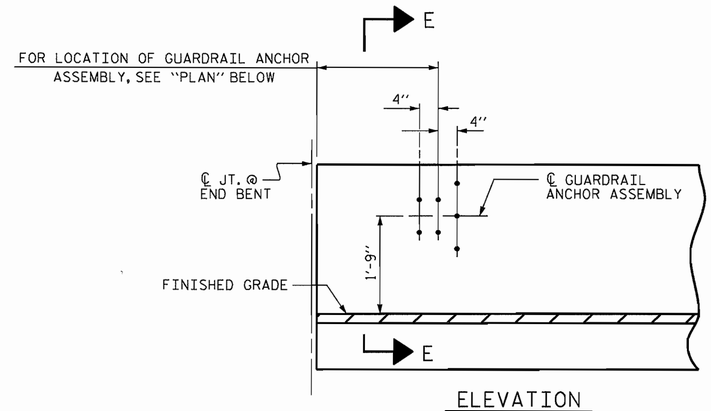

ELEVATION

NOTES

THE GUARDRAIL ANCHOR ASSEMBLY SHALL CONSIST OF A 1/4" HOLD DOWN PLATE AND 7 - 7/8" Ø BOLTS WITH NUTS AND WASHERS.

THE HOLD-DOWN PLATE SHALL CONFORM TO AASHTO M270 GRADE 36. AFTER FABRICATION, THE HOLD-DOWN PLATE SHALL BE HOT-DIP GALVANIZED IN ACCORDANCE WITH AASHTO M111.

BOLTS SHALL CONFORM TO THE REQUIREMENTS OF ASTM A307 AND NUTS SHALL CONFORM TO THE REQUIREMENTS OF AASHTO M291. BOLTS, NUTS AND WASHERS SHALL BE GALVANIZED. (AT THE CONTRACTOR'S OPTION, STAINLESS STEEL BOLTS, NUTS AND WASHERS MAY BE USED AS AN ALTERNATE FOR THE 7/8" Ø GALVANIZED BOLTS, NUTS AND WASHERS. THEY SHALL CONFORM TO OR EXCEED THE MECHANICAL REQUIREMENTS OF ASTM A307. THE USE OF THIS ALTERNATE SHALL BE APPROVED BY THE ENGINEER.)

THE GUARDRAIL ANCHOR ASSEMBLY IS REQUIRED AT ALL POINTS WHERE APPROACH GUARDRAIL IS TO BE ATTACHED TO THE END OF BARRIER RAIL. FOR POINTS OF ATTACHMENT, SEE SKETCH.

AFTER INSTALLATION, THE EXPOSED THREAD OF THE BOLT SHALL BE BURRED WITH A SHARP POINTED TOOL.

THE COST OF THE GUARDRAIL ANCHOR ASSEMBLY SHALL BE INCLUDED IN THE UNIT CONTRACT PRICE BID FOR VERTICAL CONCRETE BARRIER RAIL.

THE VERTICAL REINFORCING BARS MAY BE SHIFTED SLIGHTLY IN THE VERTICAL CONCRETE BARRIER RAIL TO CLEAR ASSEMBLY BOLTS.

THE 1 1/4" Ø HOLES SHALL BE FORMED OR DRILLED WITH A CORE BIT. IMPACT TOOLS WILL NOT BE PERMITTED. ANY CONCRETE DAMAGED BY THIS WORK SHALL BE REPAIRED TO THE SATISFACTION OF THE ENGINEER.

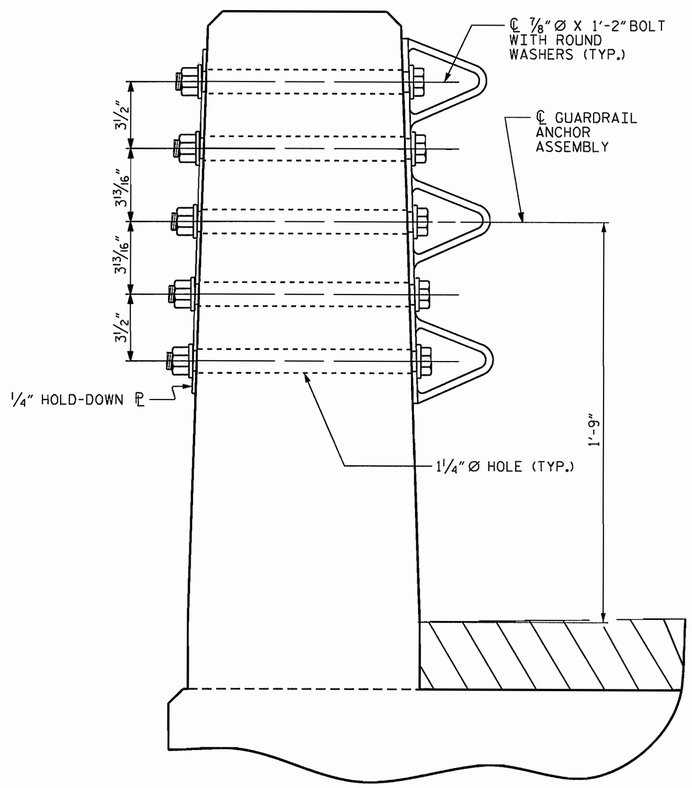

SECTION E-E

GUARDRAIL ANCHOR ASSEMBLY DETAILS

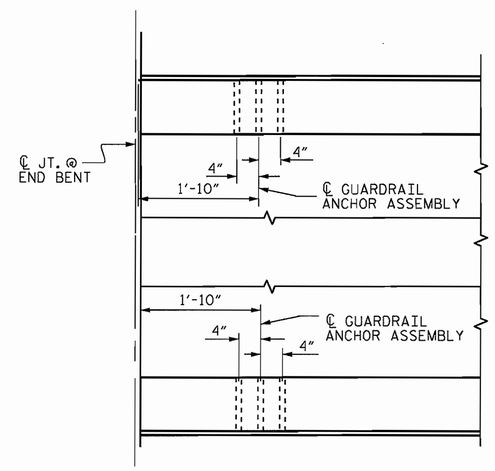

PLAN

LOCATION OF ANCHORS FOR GUARDRAIL

END BENT NO. 1 SHOWN, END BENT NO. 2 SIMILAR.

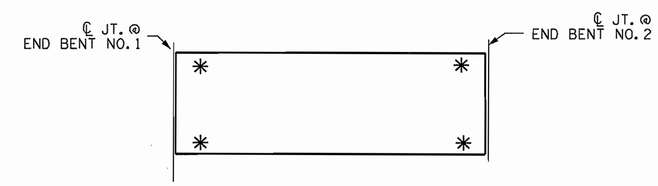

SKETCH SHOWING POINTS OF ATTACHMENT

✳ DENOTES GUARDRAIL ANCHOR ASSEMBLY

PROJECT NO. BD-51140
TRANSYLVANIA COUNTY
STATION: 12+23.56 -L-

STATE OF NORTH CAROLINA
DEPARTMENT OF TRANSPORTATION
RALEIGH

STANDARD
GUARDRAIL ANCHORAGE FOR VERTICAL CONCRETE BARRIER RAIL

NORTH CAROLINA PROFESSIONAL SEAL 15779 ENGINEER JOHN R. DUGGINS, JR.
5/18/12

REVISIONS						SHEET NO.
NO.	BY:	DATE:	NO.	BY:	DATE:	S-7
1			3			TOTAL SHEETS
2			4			13

ASSEMBLED BY : R.Z. DEAN DATE : 11/2011	
CHECKED BY : J.R. DUGGINS DATE : 11/2011	
DRAWN BY : MAA 5/10	ADDED 5/6/10
CHECKED BY : GM 5/10	REV. 10/1/11 MAA/GM

18-MAY-2012 08:32
S:\DPG4\John\LIBR_Files\BD-51140\Final_Plans\BD-51140_SD_CS.dgn
jduggins

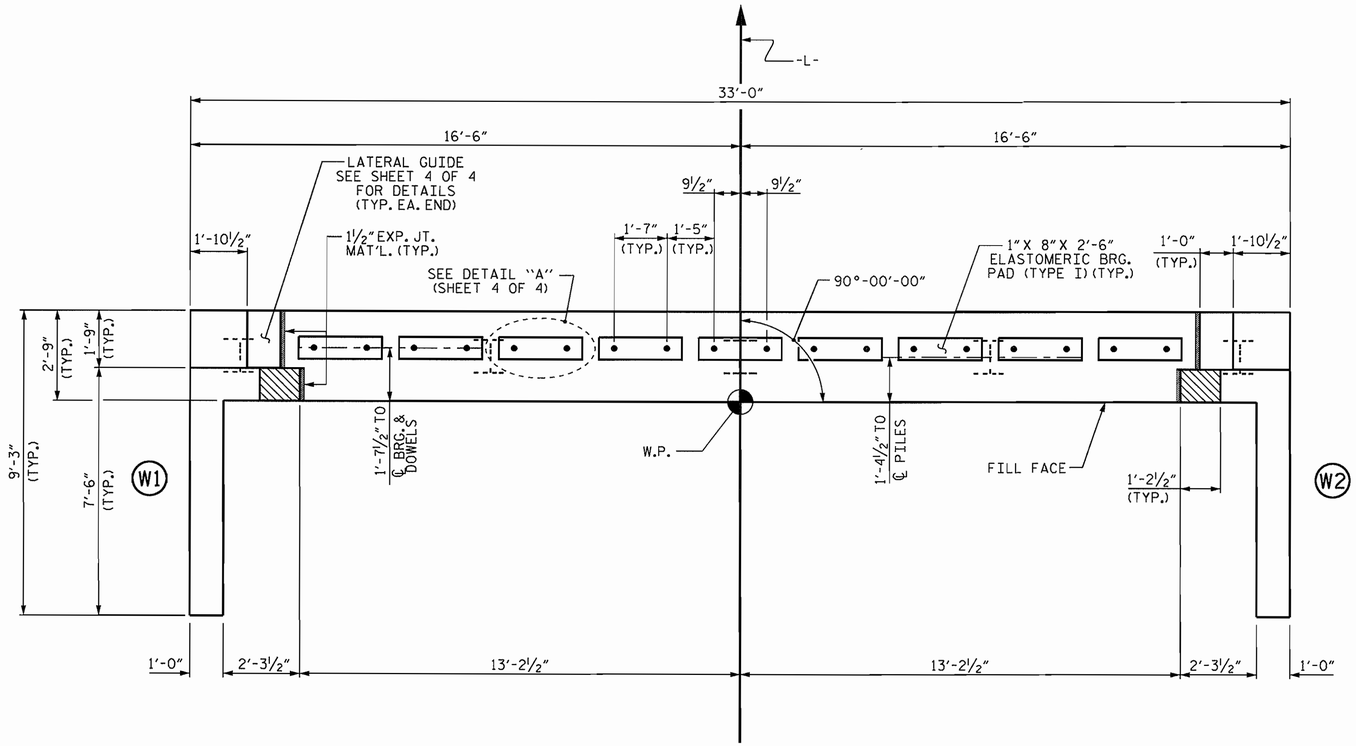

PLAN

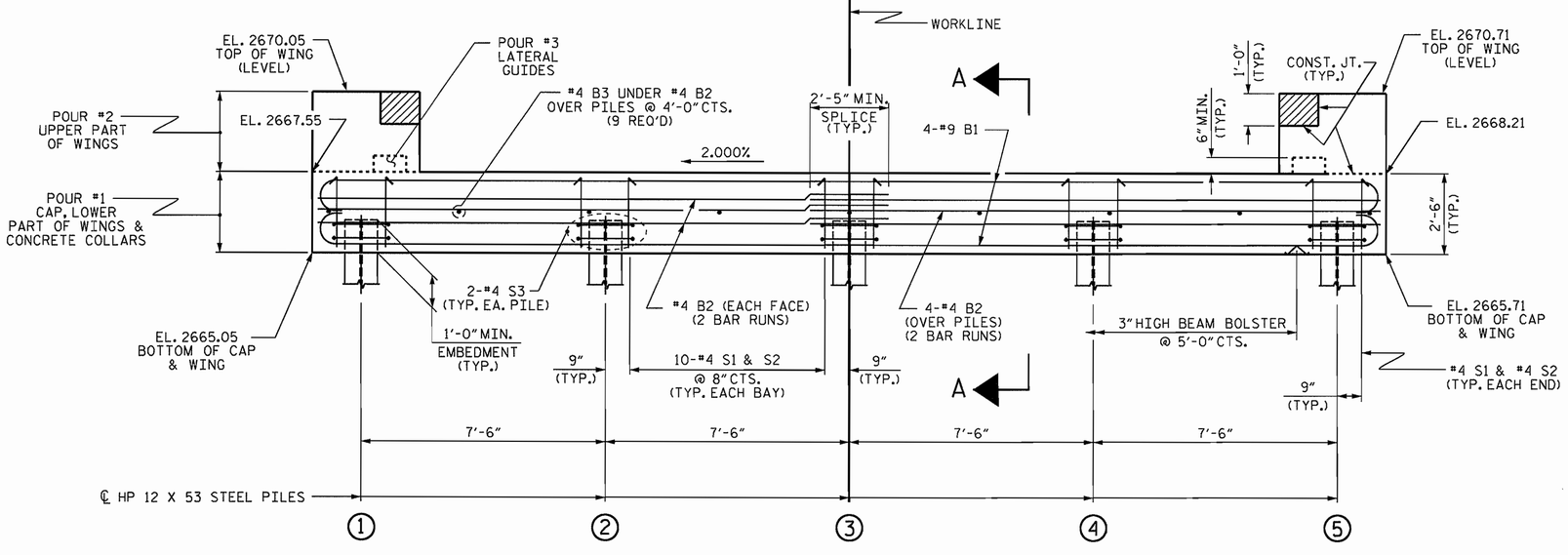

ELEVATION

WINGS NOT SHOWN FOR CLARITY.
FOR SECTION A-A, SEE SHEET 4 OF 4.
CONCRETE COLLARS FOR STEEL PILES NOT SHOWN IN PLAN AND ELEVATION VIEWS FOR CLARITY.
SEE "CORROSION PROTECTION FOR STEEL PILES DETAIL", SHEET 4 OF 4.

NOTES

STIRRUPS IN CAP MAY BE SHIFTED AS NECESSARY TO CLEAR DOWELS.

THE LATERAL GUIDES ARE NOT TO BE POURED UNTIL AFTER THE CORED SLAB UNITS ARE IN PLACE.

THE CONCRETE IN THE SHADED AREA OF THE WING SHALL BE POURED AFTER THE VERTICAL CONCRETE BARRIER RAIL IS CAST IF SLIP FORMING IS USED.

FOR PILE SPLICE DETAILS, SEE SHEET 4 OF 4.

FOR WING DETAILS, SEE SHEET 3 OF 4.

THE CONTRACTOR HAS THE OPTION TO OMIT THE LATERAL GUIDE IF APPROVED BY THE ENGINEER.

TOP OF PILE ELEVATIONS	
1	2666.09
2	2666.24
3	2666.39
4	2666.54
5	2666.69

PROJECT NO. BD-51140
TRANSYLVANIA COUNTY
STATION: 12+23.56 -L-

SHEET 1 OF 4

STATE OF NORTH CAROLINA
DEPARTMENT OF TRANSPORTATION
RALEIGH

SUBSTRUCTURE

END BENT No. 1

NORTH CAROLINA PROFESSIONAL SEAL 15779 ENGINEER JOHN R. DUGGINS, JR.
5/18/12

REVISIONS								SHEET NO.
NO.	BY:	DATE:	NO.	BY:	DATE:			S-8
1			3					TOTAL SHEETS
2			4					13

ASSEMBLED BY : R.Z. DEAN	DATE : 12/2011
CHECKED BY : J.R. DUGGINS	DATE : 12/2011
DRAWN BY : DGE 02/10	
CHECKED BY : MKT 02/10	

18-MAY-2012 08:31
S:\DPG4\John\LIBR_Files\BD-51140\Final_Plans\BD-51140_SD_E*.dgn
jduggins

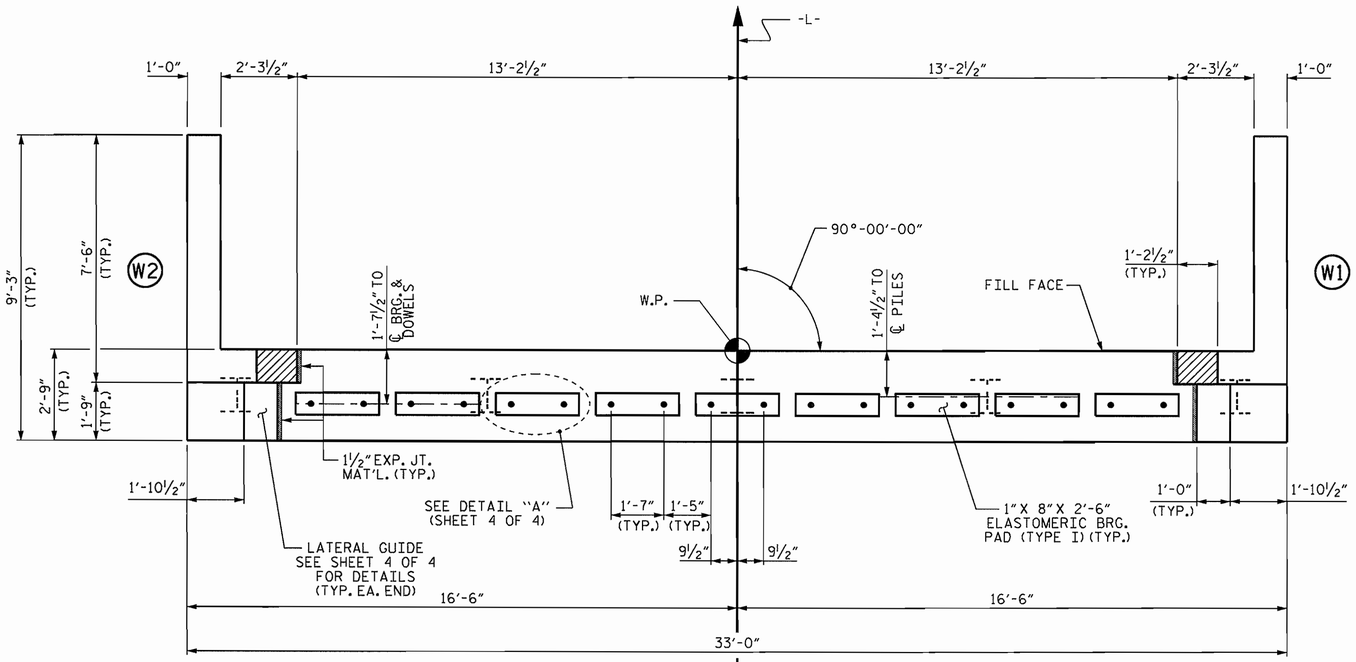

PLAN

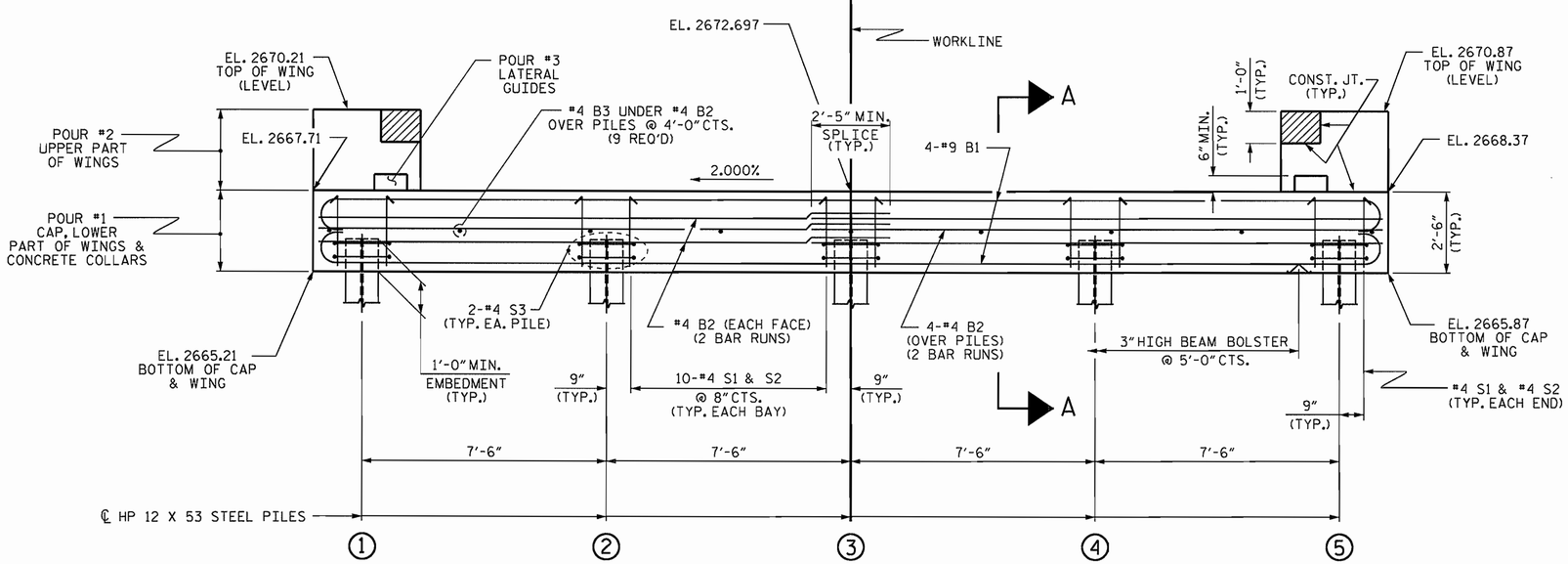

ELEVATION

WINGS NOT SHOWN FOR CLARITY.
FOR SECTION A-A, SEE SHEET 4 OF 4.
CONCRETE COLLARS FOR STEEL PILES NOT SHOWN IN PLAN AND ELEVATION VIEWS FOR CLARITY.
SEE "CORROSION PROTECTION FOR STEEL PILES DETAIL", SHEET 4 OF 4.

NOTES

STIRRUPS IN CAP MAY BE SHIFTED AS NECESSARY TO CLEAR DOWELS.

THE LATERAL GUIDES ARE NOT TO BE POURED UNTIL AFTER THE CORED SLAB UNITS ARE IN PLACE.

THE CONCRETE IN THE SHADED AREA OF THE WING SHALL BE POURED AFTER THE VERTICAL CONCRETE BARRIER RAIL IS CAST IF SLIP FORMING IS USED.

FOR PILE SPLICE DETAILS, SEE SHEET 4 OF 4.

FOR WING DETAILS, SEE SHEET 3 OF 4.

THE CONTRACTOR HAS THE OPTION TO OMIT THE LATERAL GUIDE IF APPROVED BY THE ENGINEER.

TOP OF PILE ELEVATIONS	
1	2666.25
2	2666.40
3	2666.55
4	2666.70
5	2666.85

PROJECT NO. BD-51140
TRANSYLVANIA COUNTY
STATION: 12+23.56 -L-

SHEET 2 OF 4

STATE OF NORTH CAROLINA
DEPARTMENT OF TRANSPORTATION
RALEIGH

SUBSTRUCTURE
END BENT No. 2

NORTH CAROLINA PROFESSIONAL SEAL 15779 ENGINEER JOHN R. DUGGINS, JR.
5/18/12

REVISIONS						
NO.	BY:	DATE:	NO.	BY:	DATE:	
1			3			
2			4			

SHEET NO. S-9
TOTAL SHEETS 13

ASSEMBLED BY : R.Z. DEAN DATE : 12/2011
CHECKED BY : J.R. DUGGINS DATE : 12/2011
DRAWN BY : DGE 02/10
CHECKED BY : MKT 02/10

18-MAY-2012 08:30
S:\DPG4\John\LIBR_Files\BD-51140\Final_Plans\BD-51140_SD_E*.dgn
jduggins

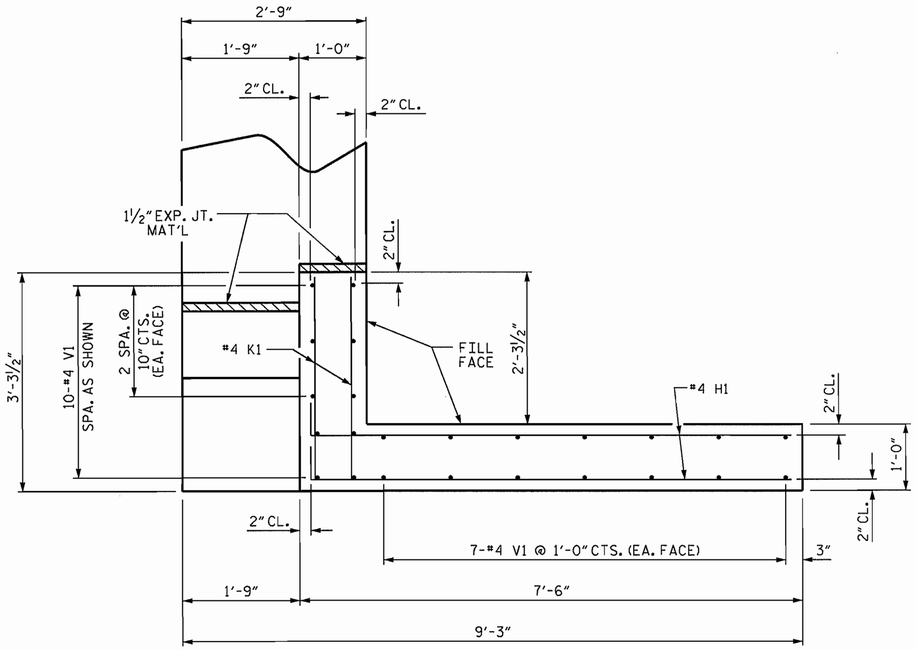

PLAN OF WING (W1)

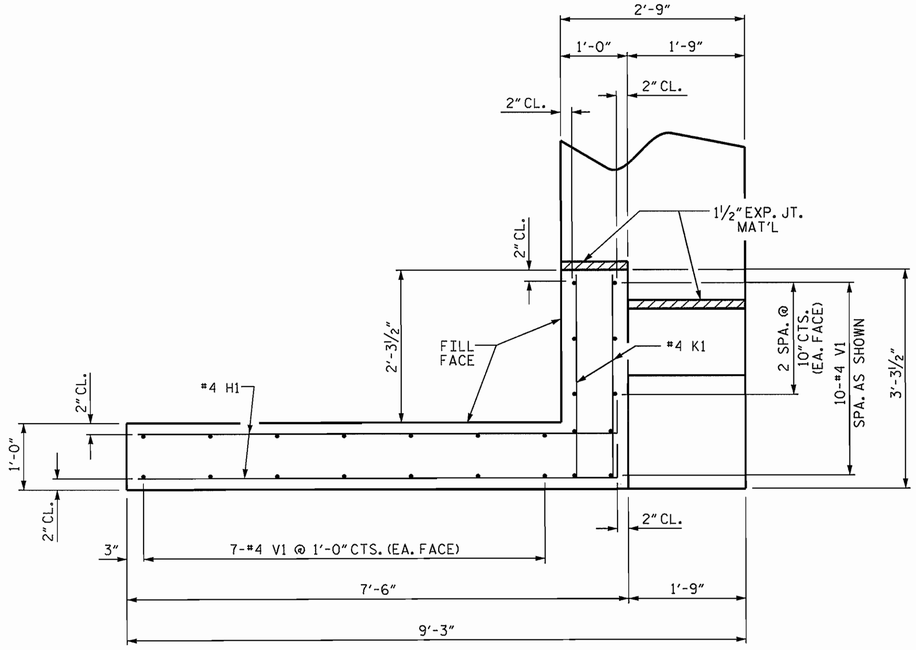

PLAN OF WING (W2)

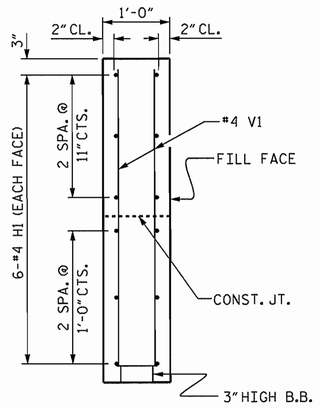

SECTION X-X

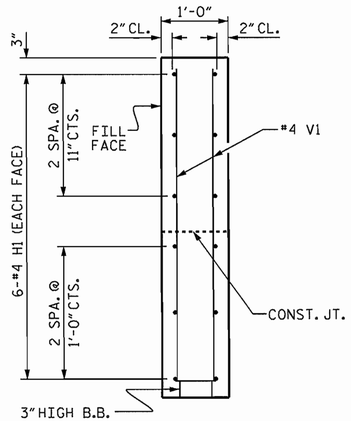

SECTION Y-Y

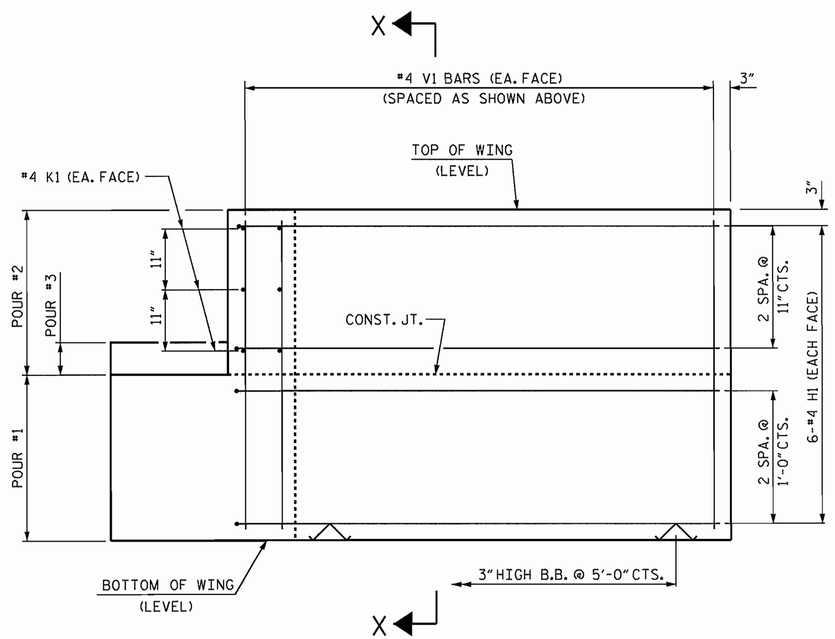

ELEVATION OF WING (W1)

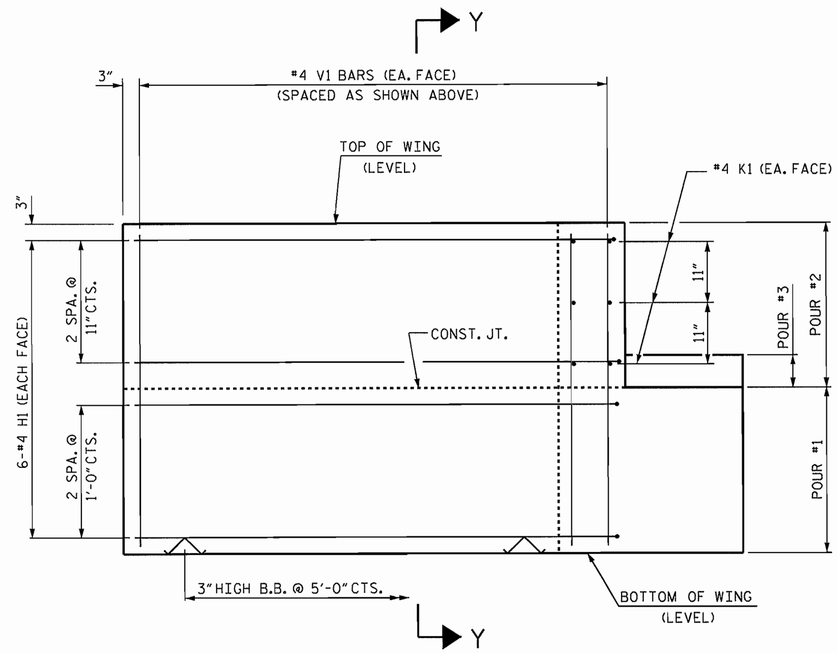

ELEVATION OF WING (W2)

WING DETAILS

PROJECT NO. BD-51140
TRANSYLVANIA COUNTY
STATION: 12+23.56 -L-

SHEET 3 OF 4

STATE OF NORTH CAROLINA
DEPARTMENT OF TRANSPORTATION
RALEIGH

SUBSTRUCTURE
END BENT
WING DETAILS

NORTH CAROLINA PROFESSIONAL SEAL 15779 ENGINEER JOHN R. DUGGINS, JR.
5/18/12

REVISIONS						SHEET NO.
NO.	BY:	DATE:	NO.	BY:	DATE:	S-10
1			3			TOTAL SHEETS
2			4			13

ASSEMBLED BY : R.Z. DEAN	DATE : 12/2011
CHECKED BY : J.R. DUGGINGS	DATE : 12/2011
DRAWN BY : DGE 02/10	
CHECKED BY : MKT 02/10	

18-MAY-2012 08:30
S:\DPG4\John\LIBR_Files\BD-51140\Final_Plans\BD-51140_SD_E*.dgn
jduggins

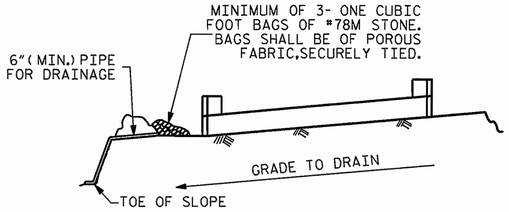

BAGGED STONE AND PIPE SHALL BE PLACED IMMEDIATELY AFTER COMPLETION OF END BENT EXCAVATION. PIPE MAY BE EITHER CONCRETE, CORRUGATED STEEL, CORRUGATED ALUMINUM ALLOY, OR CORRUGATED PLASTIC. PERFORATED PIPE WILL NOT BE ALLOWED.

BAGGED STONE SHALL REMAIN IN PLACE UNTIL THE ENGINEER DIRECTS THAT IT BE REMOVED. THE CONTRACTOR SHALL REMOVE AND DISPOSE OF SILT ACCUMULATIONS AT BAGGED STONE WHEN SO DIRECTED BY THE ENGINEER. BAGS SHALL BE REMOVED AND REPLACED WHENEVER THE ENGINEER DETERMINES THAT THEY HAVE DETERIORATED AND LOST THEIR EFFECTIVENESS.

NO SEPARATE PAYMENT WILL BE MADE FOR THIS WORK AND THE ENTIRE COST OF THIS WORK SHALL BE INCLUDED IN THE UNIT CONTRACT PRICE BID FOR THE SEVERAL PAY ITEMS.

TEMPORARY DRAINAGE AT END BENT

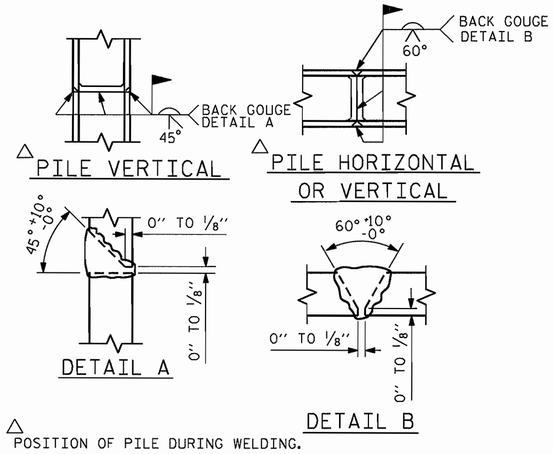

△ POSITION OF PILE DURING WELDING.

PILE SPLICE DETAILS

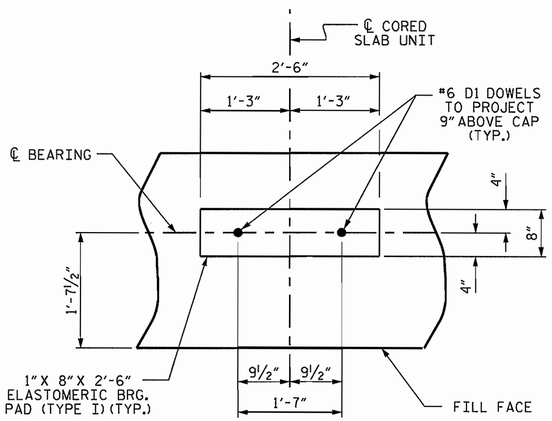

DETAIL "A"

(END BENT No. 1 SHOWN, END BENT No. 2 SIMILAR BY ROTATION)

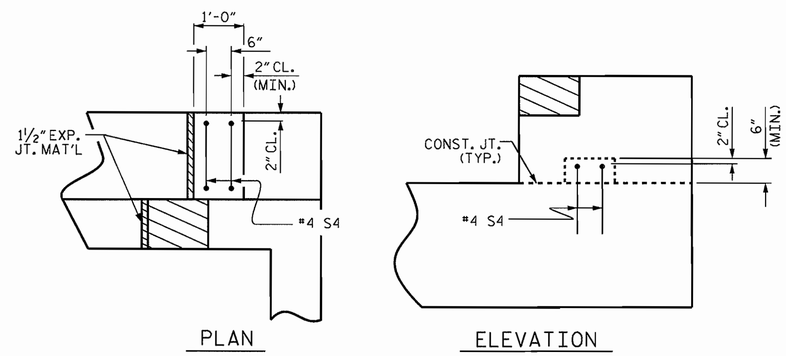

LATERAL GUIDE DETAILS

(RIGHT LATERAL GUIDE SHOWN, LEFT END SIMILAR)

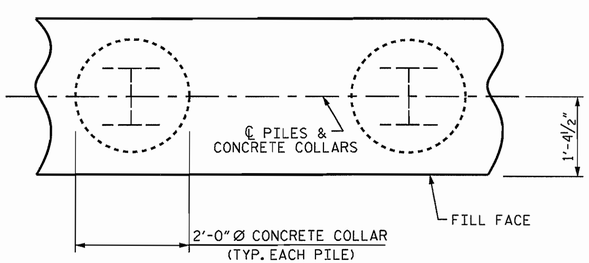

PLAN

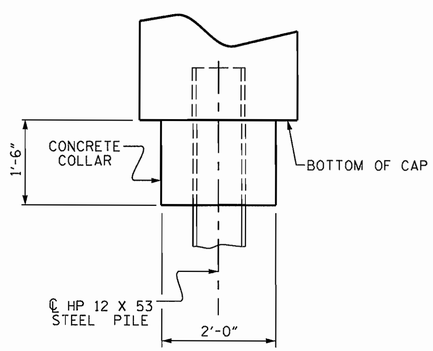

ELEVATION

CORROSION PROTECTION FOR STEEL PILES DETAIL

(END BENT No. 1 SHOWN, END BENT No. 2 SIMILAR BY ROTATION)

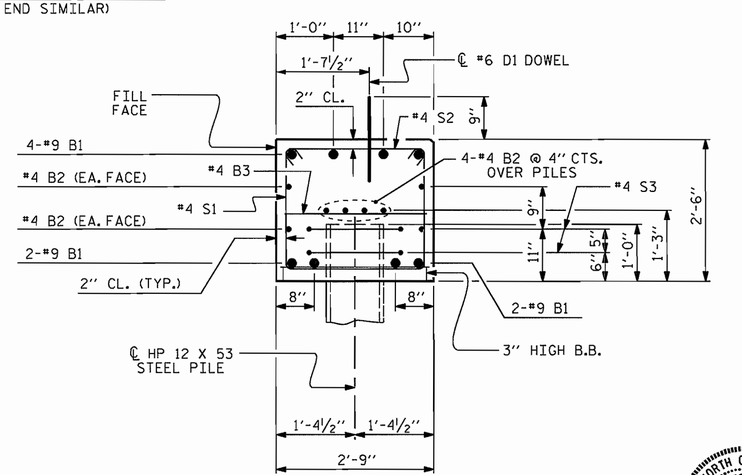

SECTION A-A

(CONCRETE COLLAR NOT SHOWN FOR CLARITY. SEE "CORROSION PROTECTION FOR STEEL PILES DETAIL.")

BAR TYPES

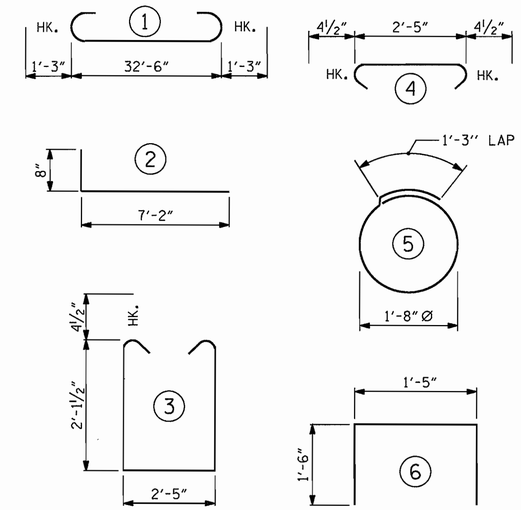

ALL BAR DIMENSIONS ARE OUT TO OUT.

END BENT No. 1	
HP 12 X 53 STEEL PILES	
NO: 5	LIN. FT.= 205

END BENT No. 2	
HP 12 X 53 STEEL PILES	
NO: 5	LIN. FT.= 240

BILL OF MATERIAL FOR ONE END BENT

BAR	NO.	SIZE	TYPE	LENGTH	WEIGHT
B1	8	#9	1	35'-0"	952
B2	16	#4	STR	17'-7"	188
B3	9	#4	STR	2'-5"	15
D1	18	#6	STR	1'-6"	41
H1	24	#4	2	7'-10"	126
K1	12	#4	STR	2'-11"	23
S1	42	#4	3	7'-5"	208
S2	42	#4	4	3'-2"	89
S3	10	#4	5	6'-6"	43
S4	4	#4	6	4'-5"	12
V1	48	#4	STR	4'-8"	150
REINFORCING STEEL (FOR ONE END BENT)					1847 LBS.

CLASS A CONCRETE BREAKDOWN (FOR ONE END BENT)

POUR #1	CAP, LOWER PART OF WINGS & COLLARS	10.5 C.Y.
POUR #2	UPPER PART OF WINGS	1.8 C.Y.
POUR #3	LATERAL GUIDES	0.1 C.Y.
TOTAL CLASS A CONCRETE		12.4 C.Y.

PROJECT NO. BD-51140
TRANSYLVANIA COUNTY
STATION: 12+23.56 -L-

SHEET 4 OF 4

STATE OF NORTH CAROLINA
DEPARTMENT OF TRANSPORTATION
RALEIGH

SUBSTRUCTURE

END BENT No. 1 & 2 DETAILS

NORTH CAROLINA PROFESSIONAL SEAL 15779 ENGINEER JOHN R. DUGGINS, JR.
5/18/12

REVISIONS							SHEET NO.
NO.	BY:	DATE:	NO.	BY:	DATE:		S-11
1			3				TOTAL SHEETS
2			4				13

ASSEMBLED BY : R.Z.DEAN	DATE : 12/2011	
CHECKED BY : J.R. DUGGINS	DATE : 12/2011	
DRAWN BY : DGE 02/10		
CHECKED BY : MKT 02/10		

18-MAY-2012 08:29
S:\DPG4\John\LIBR_Files\BD-51140\Final_Plans\BD-51140_SD_E*.dgn
jduggins

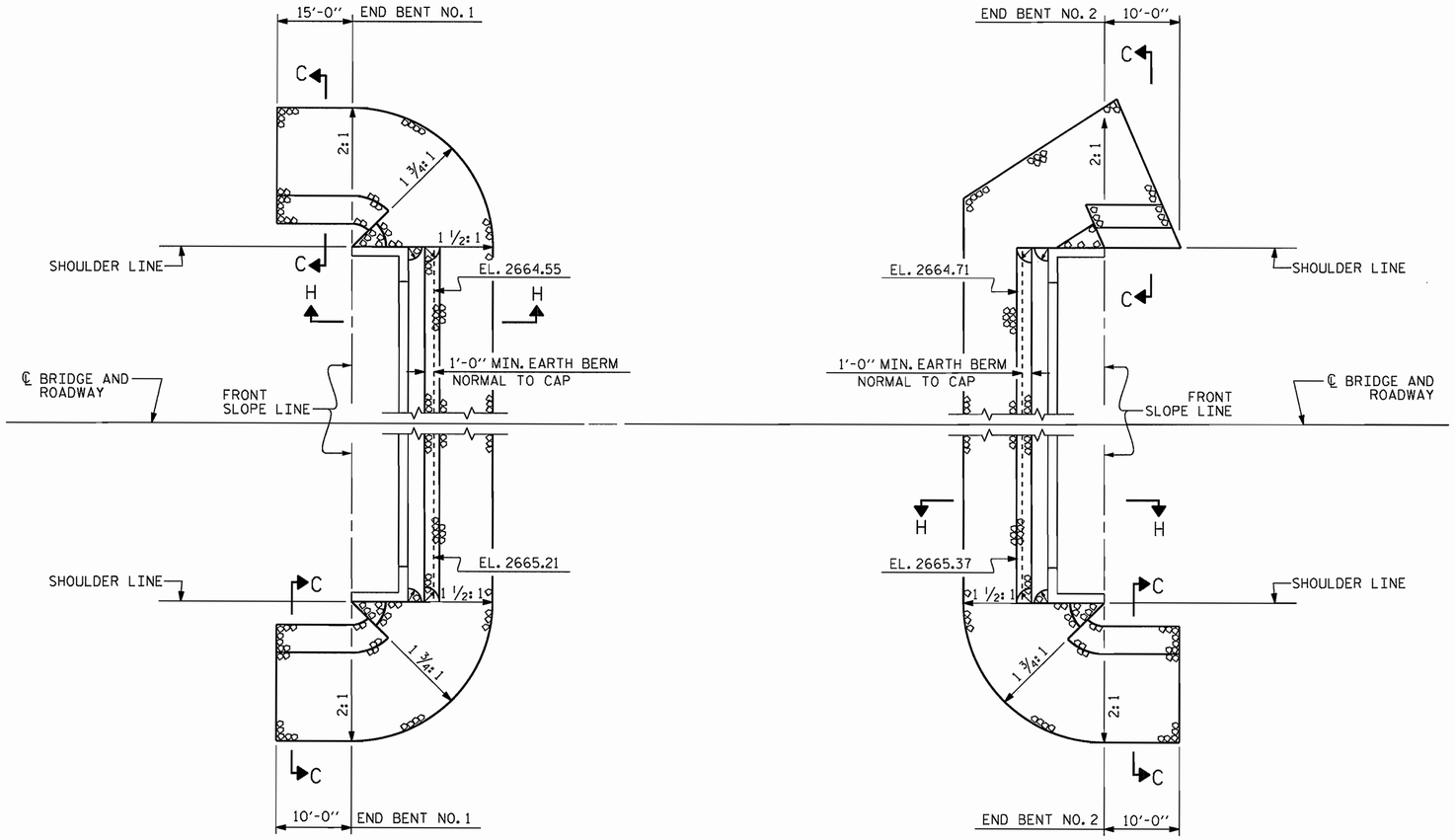

SHOULDER RIP RAP IS HIGHER THAN BERM RIP RAP

ESTIMATED QUANTITIES		
BRIDGE @ STA. 12+23.56 -L-	RIP RAP CLASS II (2'-0" THICK)	GEOTEXTILE FOR DRAINAGE
	TONS	SQUARE YARDS
END BENT 1	110	122
END BENT 2	85	95

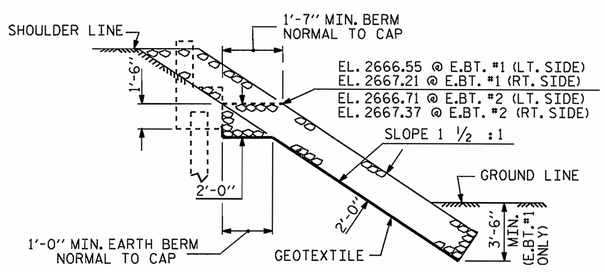

SECTION H-H

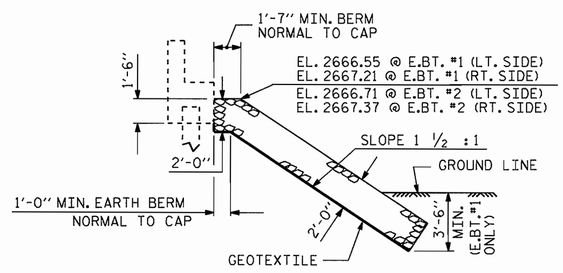

℄ SECTION
BERM RIP RAPPED

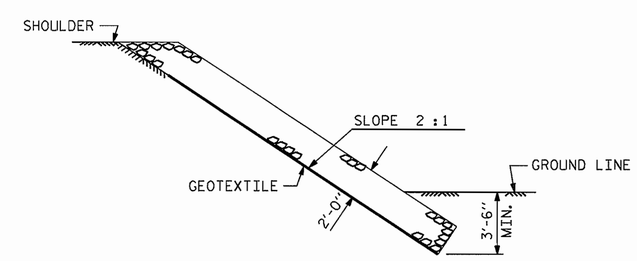

SECTION C-C

PROJECT NO. BD-51140
TRANSYLVANIA COUNTY
STATION: 12+23.56 -L-

STATE OF NORTH CAROLINA
DEPARTMENT OF TRANSPORTATION
RALEIGH

RIP RAP DETAILS

NORTH CAROLINA PROFESSIONAL SEAL 15779 ENGINEER JOHN R. DUGGINS, JR.
5/18/12

REVISIONS							SHEET NO.
NO.	BY:	DATE:	NO.	BY:	DATE:		S-12
1			3				TOTAL SHEETS
2			4				13

ASSEMBLED BY : V.X. NGUYEN	DATE : 5/2012		
CHECKED BY : J.R. DUGGINS	DATE : 5/2012		
DRAWN BY : REK 1/84	REV. 5/1/06R	TLA/GM	
CHECKED BY : RDU 1/84	REV. 10/1/11	MAA/GM	
	REV. 12/21/11	MAA/GM	

18-MAY-2012 08:28
S:\DPG4\John\LIBR_Files\BD-51140\Final_Plans\BD-51140_SD_RR.dgn
jduggins

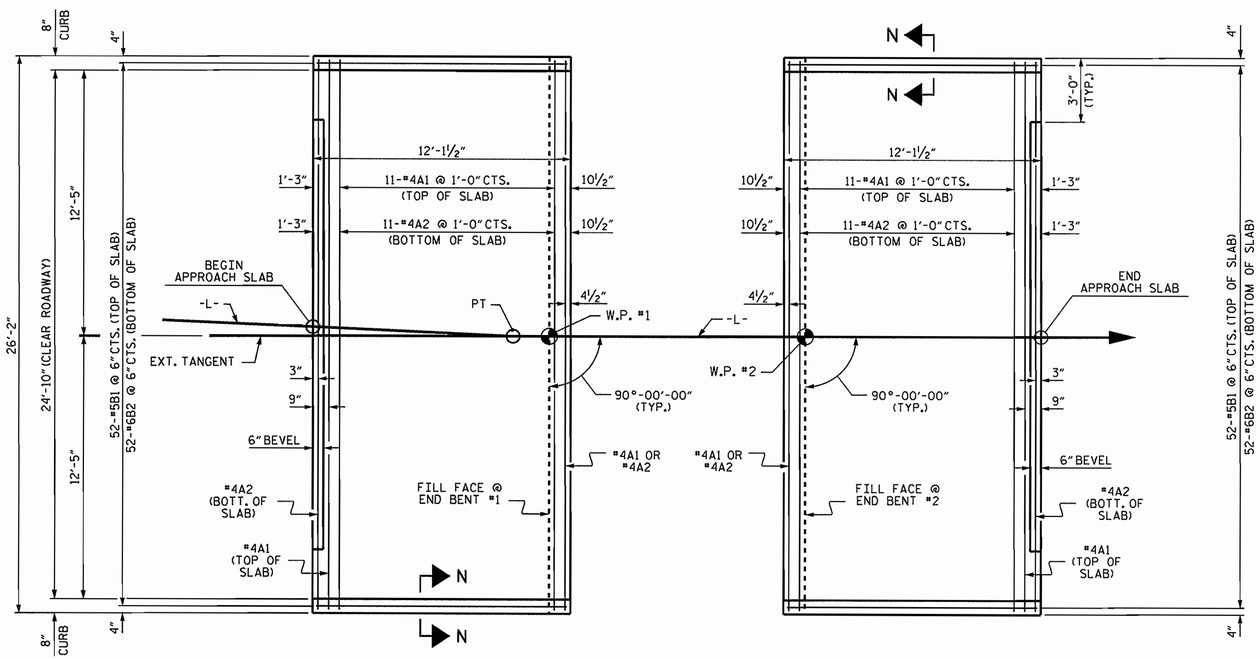

PLAN @ END BENT #1

PLAN @ END BENT #2

DIMENSIONS SHOWN ARE TYPICAL FOR BOTH APPROACH SLABS

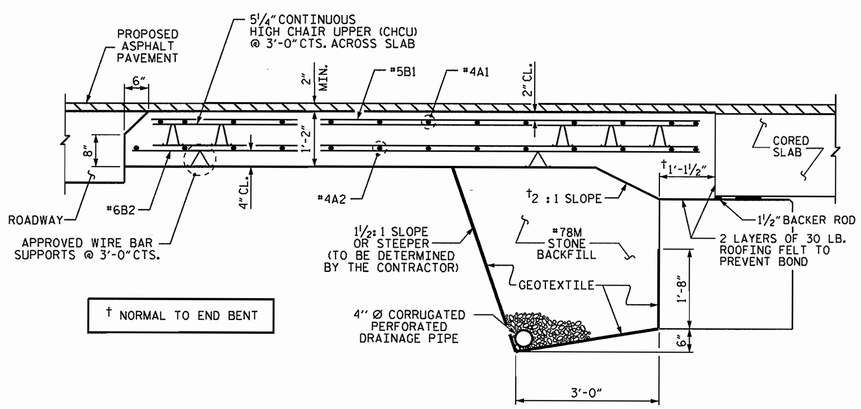

SECTION THRU SLAB

SPLICE LENGTHS		
BAR SIZE	EPOXY COATED	UNCOATED
#4	2'-0"	1'-9"
#5	2'-6"	2'-2"
#6	3'-10"	2'-7"

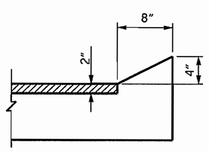

SECTION N-N

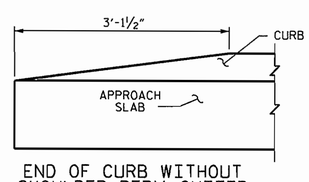

END OF CURB WITHOUT SHOULDER BERM GUTTER

CURB DETAILS

NOTES

FOR BRIDGE APPROACH FILL INCLUDING GEOTEXTILE, 4" Ø DRAINAGE PIPE, AND #78M STONE BACKFILL, SEE ROADWAY PLANS.

GEOTEXTILE SHALL BE TYPE 1 IN ACCORDANCE WITH THE STANDARD SPECIFICATIONS SECTION 1056.

#78M STONE BACKFILL (CLASS V SELECT MATERIAL) SHALL BE IN ACCORDANCE WITH STANDARD SPECIFICATIONS SECTION 1016.

#78M STONE BACKFILL IS TO BE CONTINUOUS ALONG FILL FACE OF BACKWALL FROM OUTSIDE EDGE TO OUTSIDE EDGE OF APPROACH SLAB.

FOR THE 4" Ø DRAINAGE PIPE OUTLET(S), SEE ROADWAY STANDARD DRAWINGS.

AREA BETWEEN THE WINGWALL AND APPROACH SLAB SHALL BE GRADED TO DRAIN THE WATER AWAY FROM THE FILL FACE OF THE BRIDGE AND SHALL BE PAVED. SEE ROADWAY PLANS.

APPROACH SLAB GROOVING IS NOT REQUIRED.

BILL OF MATERIAL

APPROACH SLAB AT EB #1

BAR	NO.	SIZE	TYPE	LENGTH	WEIGHT
* A1	13	#4	STR	25'-10"	224
A2	13	#4	STR	25'-10"	224
* B1	52	#5	STR	11'-2"	606
B2	52	#6	STR	11'-8"	911
REINFORCING STEEL				LBS.	1135
* EPOXY COATED REINFORCING STEEL				LBS.	830
CLASS AA CONCRETE				C. Y.	15.2

APPROACH SLAB AT EB #2

BAR	NO.	SIZE	TYPE	LENGTH	WEIGHT
* A1	13	#4	STR	25'-10"	224
A2	13	#4	STR	25'-10"	224
* B1	52	#5	STR	11'-2"	606
B2	52	#6	STR	11'-8"	911
REINFORCING STEEL				LBS.	1135
* EPOXY COATED REINFORCING STEEL				LBS.	830
CLASS AA CONCRETE				C. Y.	15.2

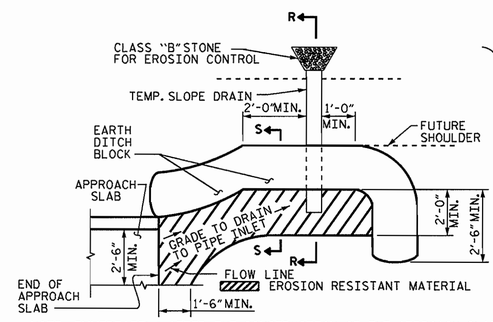

NOTE: IMMEDIATELY AFTER THE CONSTRUCTION OF THE APPROACH SLAB, THE CONTRACTOR SHALL PROVIDE TEMPORARY BERM AND SLOPE DRAIN. CONTRACTOR SHALL GRADE TO PIPE INLET AND PROVIDE EROSION RESISTANT MATERIAL AS SHOWN. THE EROSION RESISTANT MATERIAL SHALL BE EITHER 1) ASPHALT PLANT MIX, TYPE 1 OR TYPE 2, MIN. 2" DEPTH, 2) EROSION CONTROL MAT, OR 3) CONCRETE, AS DIRECTED BY THE ENGINEER. THE SLOPE DRAIN SHALL CONSIST OF A NON-PERFORATED TEMPORARY DRAINAGE PIPE, 12 INCHES IN DIAMETER.

PLAN VIEW

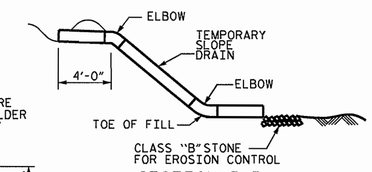

SECTION R-R

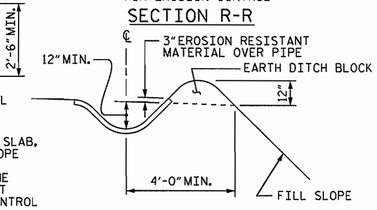

SECTION S-S

TEMPORARY BERM AND SLOPE DRAIN DETAILS

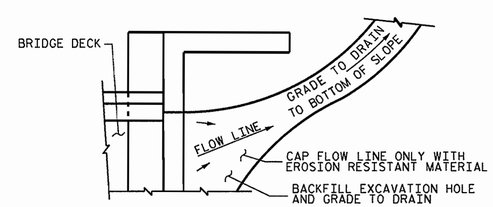

NOTE: IF THE APPROACH SLAB IS NOT CONSTRUCTED IMMEDIATELY AFTER THE BACKFILLING OF THE END BENT EXCAVATION, GRADE TO DRAIN TO THE BOTTOM OF THE SLOPE AND PROVIDE EROSION RESISTANT MATERIAL, SUCH AS FIBERGLASS ROVING OR AS DIRECTED BY THE ENGINEER TO PREVENT SOIL EROSION AND TO PROTECT THE AREA ADJACENT TO THE STRUCTURE. THE CONTRACTOR WILL BE REQUIRED TO REMOVE THESE MATERIALS PRIOR TO CONSTRUCTION OF THE APPROACH SLAB.

TEMPORARY DRAINAGE DETAIL

PROJECT NO. BD-51140

TRANSYLVANIA COUNTY

STATION: 12+23.56 -L-

STATE OF NORTH CAROLINA
DEPARTMENT OF TRANSPORTATION
RALEIGH

STANDARD
BRIDGE APPROACH SLAB
FOR PRESTRESSED CONCRETE
CORED SLAB UNIT
(SUB-REGIONAL TIER)
90° SKEW

NORTH CAROLINA PROFESSIONAL SEAL 15779 ENGINEER JOHN R. DUGGINS, JR.
5/18/12

REVISIONS								SHEET NO.
NO.	BY:	DATE:	NO.	BY:	DATE:			S-13
1			3					TOTAL SHEETS
2			4					13

ASSEMBLED BY : V.X. NGUYEN		DATE : 5/2012	
CHECKED BY : J.R. DUGGINS		DATE : 5/2012	
DRAWN BY : SHS/MAA 5-09	REV. 12-11	MAA/AAC	
CHECKED BY : BCH 5-09			

18-MAY-2012 08:27
S:\DPG4\John\LIBR_Files\BD-51140\Final_Plans\BD-51140_SD_AS.dgn
jduggins

STD. NO. BAS_27_90S

STANDARD NOTES

DESIGN DATA:

SPECIFICATIONS	A.A.S.H.T.O. (CURRENT)
LIVE LOAD	SEE PLANS
IMPACT ALLOWANCE	SEE A.A.S.H.T.O.
STRESS IN EXTREME FIBER OF	
STRUCTURAL STEEL - AASHTO M270 GRADE 36	20,000 LBS. PER SQ. IN.
- AASHTO M270 GRADE 50W	27,000 LBS. PER SQ. IN.
- AASHTO M270 GRADE 50	27,000 LBS. PER SQ. IN.
REINFORCING STEEL IN TENSION	
GRADE 60	24,000 LBS. PER SQ. IN.
CONCRETE IN COMPRESSION	1,200 LBS. PER SQ. IN.
CONCRETE IN SHEAR	SEE A.A.S.H.T.O.
STRUCTURAL TIMBER - TREATED OR	
UNTREATED - EXTREME FIBER STRESS	1,800 LBS. PER SQ. IN.
COMPRESSION PERPENDICULAR TO GRAIN OF TIMBER	375 LBS. PER SQ. IN.
EQUIVALENT FLUID PRESSURE OF EARTH	30 LBS. PER CU. FT. (MINIMUM)

MATERIAL AND WORKMANSHIP:

EXCEPT AS MAY OTHERWISE BE SPECIFIED ON PLANS OR IN THE SPECIAL PROVISIONS, ALL MATERIAL AND WORKMANSHIP SHALL BE IN ACCORDANCE WITH THE 2012 "STANDARD SPECIFICATIONS FOR ROADS AND STRUCTURES" OF THE N. C. DEPARTMENT OF TRANSPORTATION.

STEEL SHEET PILING FOR PERMANENT OR TEMPORARY APPLICATIONS SHALL BE HOT ROLLED.

CONCRETE:

UNLESS OTHERWISE REQUIRED ON PLANS, CLASS A CONCRETE SHALL BE USED FOR ALL PORTIONS OF ALL STRUCTURES WITH THE EXCEPTION THAT: CLASS AA CONCRETE SHALL BE USED IN BRIDGE SUPERSTRUCTURES, ABUTMENT BACKWALLS, AND APPROACH SLABS; AND CLASS B CONCRETE SHALL BE USED FOR SLOPE PROTECTION AND RIP RAP.

CONCRETE CHAMFERS:

UNLESS OTHERWISE NOTED ON THE PLANS, ALL EXPOSED CORNERS ON STRUCTURES SHALL BE CHAMFERED 3/4" WITH THE FOLLOWING EXCEPTIONS: TOP CORNERS OF CURBS MAY BE ROUNDED TO 1-1/2" RADIUS WHICH IS BUILT INTO CURB FORMS; CORNERS OF TRANSVERSE FLOOR EXPANSION JOINTS SHALL BE ROUNDED WITH A 1/4" FINISHING TOOL UNLESS OTHERWISE REQUIRED ON PLANS; AND CORNERS OF EXPANSION JOINTS IN THE ROADWAY FACES AND TOPS OF CURBS AND SIDEWALKS SHALL BE ROUNDED TO A 1/4" RADIUS WITH A FINISHING STONE OR TOOL UNLESS OTHERWISE REQUIRED ON PLANS.

DOWELS:

DOWELS WHEN INDICATED ON PLANS AS FOR CULVERT EXTENSIONS, SHALL BE EMBEDDED AT LEAST 12" INTO THE OLD CONCRETE AND GROUTED INTO PLACE WITH 1:2 CEMENT MORTAR.

ALLOWANCE FOR DEAD LOAD DEFLECTION, SETTLEMENT, ETC. IN CASTING SUPERSTRUCTURES:

BRIDGES SHALL BE BUILT ON THE GRADE OR VERTICAL CURVE SHOWN ON PLANS. SLABS, CURBS AND PARAPETS SHALL CONFORM TO THE GRADE OR CURVE.

ALL DIMENSIONS WHICH ARE GIVEN IN SECTION AND ARE AFFECTED BY DEAD LOAD DEFLECTIONS ARE DIMENSIONS AT CENTER LINE OF BEARING UNLESS OTHERWISE NOTED ON PLANS. IN SETTING FORMS FOR STEEL BEAM BRIDGES AND PRESTRESSED CONCRETE GIRDER BRIDGES, ADJUSTMENTS SHALL BE MADE DUE TO THE DEAD LOAD DEFLECTIONS FOR THE ELEVATIONS SHOWN. WHERE BLOCKS ARE SHOWN OVER BEAMS FOR BUILDING UP TO THE SLAB, THE VERTICAL DIMENSIONS OF THE BLOCKS SHALL BE ADJUSTED BETWEEN BEARINGS TO COMPENSATE FOR DEAD LOAD DEFLECTIONS, VERTICAL CURVE ORDINATE, AND ACTUAL BEAM CAMBER. WHERE BOTTOM OF SLAB IS IN LINE WITH BOTTOM OF TOP FLANGES, DEPTH OF SLAB BETWEEN BEARINGS SHALL BE ADJUSTED TO COMPENSATE FOR DEAD LOAD DEFLECTION, VERTICAL CURVE ORDINATE, AND ACTUAL BEAM CAMBER.

IN SETTING FALSEWORK AND FORMS FOR REINFORCED CONCRETE SPANS, AN ALLOWANCE SHALL BE MADE FOR DEAD LOAD DEFLECTIONS, SETTLEMENT OF FALSEWORK, AND PERMANENT CAMBER WHICH SHALL BE PROVIDED FOR IN ADDITION TO THE ELEVATIONS SHOWN. AFTER REMOVAL OF THE FALSEWORK, THE FINISHED STRUCTURES SHALL CONFORM TO THE PROFILE AND ELEVATIONS SHOWN ON THE PLANS AND CONSTRUCTION ELEVATIONS FURNISHED BY THE ENGINEER.

DETAILED DRAWINGS FOR FALSEWORK OR FORMS FOR BRIDGE SUPERSTRUCTURE AND ANY STRUCTURE OR PARTS OF A STRUCTURE AS NOTED ON THE PLANS SHALL BE SUBMITTED TO THE ENGINEER FOR APPROVAL BEFORE CONSTRUCTION OF THE FALSEWORK OR FORMS IS STARTED.

REINFORCING STEEL:

ALL REINFORCING STEEL SHALL BE DEFORMED. DIMENSIONS RELATIVE TO PLACEMENT OF REINFORCING ARE TO CENTERS OF BARS UNLESS OTHERWISE INDICATED IN THE PLANS. DIMENSIONS ON BAR DETAILS ARE TO CENTERS OF BARS OR ARE OUT TO OUT AS INDICATED ON PLANS.

WIRE BAR SUPPORTS SHALL BE PROVIDED FOR REINFORCING STEEL WHERE INDICATED ON THE PLANS. WHEN BAR SUPPORT PIECES ARE PLACED IN CONTINUOUS LINES, THEY SHALL BE SO PLACED THAT THE ENDS OF THE SUPPORTING WIRES SHALL BE LAPPED TO LOCK LEGS ON ADJOINING PIECES.

STRUCTURAL STEEL:

AT THE CONTRACTOR'S OPTION, HE MAY SUBSTITUTE 7/8" Ø SHEAR STUDS FOR THE 3/4" Ø STUDS SPECIFIED ON THE PLANS. THIS SUBSTITUTION SHALL BE MADE AT THE RATE OF 3 - 7/8" Ø STUDS FOR 4 - 3/4" Ø STUDS, AND STUD SPACING CHANGES SHALL BE MADE AS NECESSARY TO PROVIDE THE SAME EQUIVALENT NUMBER OF 7/8" Ø STUDS ALONG THE BEAM AS SHOWN FOR 3/4" Ø STUDS BASED ON THE RATIO OF 3 - 7/8" Ø STUDS FOR 4 - 3/4" Ø STUDS. STUDS OF THE LENGTH SPECIFIED ON THE PLANS MUST BE PROVIDED. THE MAXIMUM SPACING SHALL BE 2'-0".

EXCEPT AT THE INTERIOR SUPPORTS OF CONTINUOUS BEAMS WHERE THE COVER PLATE IS IN CONTACT WITH BEARING PLATE, THE CONTRACTOR MAY, AT HIS OPTION, SUBSTITUTE FOR THE COVER PLATES DESIGNATED ON THE PLANS COVER PLATES OF THE EQUIVALENT AREA PROVIDED THESE PLATES ARE AT LEAST 5/16" IN THICKNESS AND DO NOT EXCEED A WIDTH EQUAL TO THE FLANGE WIDTH LESS 2" OR A THICKNESS EQUAL TO 2 TIMES THE FLANGE THICKNESS. THE SIZE OF FILLET WELDS SHALL CONFORM TO THE REQUIREMENTS OF THE CURRENT ANSI/AASHTO/AWS "BRIDGE WELDING CODE". ELECTROSLAG WELDING WILL NOT BE PERMITTED.

WITH THE SOLE EXCEPTION OF EDGES AT SURFACES WHICH BEAR ON OTHER SURFACES, ALL SHARP EDGES AND ENDS OF SHAPES AND PLATES SHALL BE SLIGHTLY ROUNDED BY SUITABLE MEANS TO A RADIUS OF APPROXIMATELY 1/16 INCH OR EQUIVALENT FLAT SURFACE AT A SUITABLE ANGLE PRIOR TO PAINTING, GALVANIZING, OR METALLIZING.

HANDRAILS AND POSTS:

METAL STANDARDS AND FACES OF THE CONCRETE END POSTS FOR THE METAL RAIL SHALL BE SET NORMAL TO THE GRADE OF THE CURB, UNLESS OTHERWISE SHOWN ON PLANS. THE METAL RAIL AND TOPS OF CONCRETE POSTS USED WITH THE ALUMINUM RAIL SHALL BE BUILT PARALLEL TO THE GRADE OF THE CURB.

METAL HANDRAILS SHALL BE IN ACCORDANCE WITH THE PLANS. RAILS SHALL BE AS MANUFACTURED FOR BRIDGE RAILING. CASTINGS SHALL BE OF A UNIFORM APPEARANCE. FINS AND OTHER DEFORMATIONS RESULTING FROM CASTING OR OTHERWISE SHALL BE REMOVED IN A MANNER SO THAT A UNIFORM COLORING OF THE COMPLETED CASTING SHALL BE OBTAINED. CASTINGS WITH DISCOLORATIONS OR OF NON-UNIFORM COLORING WILL NOT BE ACCEPTED. CERTIFIED MILL REPORTS ARE REQUIRED FOR METAL RAILS AND POSTS.

SPECIAL NOTES:

GENERALLY, IN CASE OF DISCREPANCY, THIS STANDARD SHEET OF NOTES SHALL GOVERN OVER THE SPECIFICATIONS, BUT THE REMAINDER OF THE PLANS SHALL GOVERN OVER NOTES HEREON, AND SPECIAL PROVISIONS SHALL GOVERN OVER ALL. SEE SPECIFICATIONS ARTICLE 105-4.

ENGLISH

JANUARY, 1990

STATE	STATE PROJECT REFERENCE NO.	SHEET NO.	TOTAL SHEETS
N.C.	45360.1.15 BD-5114O	1	9

STATE OF NORTH CAROLINA
DEPARTMENT OF TRANSPORTATION
DIVISION OF HIGHWAYS
GEOTECHNICAL ENGINEERING UNIT

STRUCTURE SUBSURFACE INVESTIGATION

PROJ. REFERENCE NO. 45360.1.15 BD-5114O F.A. PROJ. _____

COUNTY TRANSYLVANIA

PROJECT DESCRIPTION BRIDGE NO. 130 ON SR 1147 OVER SOUTH FORK FLAT CREEK

SITE DESCRIPTION _____

CONTENTS

SHEET	DESCRIPTION
1	TITLE SHEET
2	LEGEND
3	SITE PLAN
4	PROFILE
5	CROSS SECTIONS
6-8	BORE LOG & CORE REPORTS
9	CORE PHOTOGRAPH

CAUTION NOTICE

THE SUBSURFACE INFORMATION AND THE SUBSURFACE INVESTIGATION ON WHICH IT IS BASED WERE MADE FOR THE PURPOSE OF STUDY, PLANNING, AND DESIGN, AND NOT FOR CONSTRUCTION OR PAY PURPOSES. THE VARIOUS FIELD BORING LOGS, ROCK CORES, AND SOIL TEST DATA AVAILABLE MAY BE REVIEWED OR INSPECTED IN RALEIGH BY CONTACTING THE N. C. DEPARTMENT OF TRANSPORTATION, GEOTECHNICAL ENGINEERING UNIT AT (919) 250-4088. NEITHER THE SUBSURFACE PLANS AND REPORTS, NOR THE FIELD BORING LOGS, ROCK CORES, OR SOIL TEST DATA ARE PART OF THE CONTRACT.

GENERAL SOIL AND ROCK STRATA DESCRIPTIONS AND INDICATED BOUNDARIES ARE BASED ON A GEOTECHNICAL INTERPRETATION OF ALL AVAILABLE SUBSURFACE DATA AND MAY NOT NECESSARILY REFLECT THE ACTUAL SUBSURFACE CONDITIONS BETWEEN BORINGS OR BETWEEN SAMPLED STRATA WITHIN THE BOREHOLE. THE LABORATORY SAMPLE DATA AND THE IN SITU (IN-PLACE) TEST DATA CAN BE RELIED ON ONLY TO THE DEGREE OF RELIABILITY INHERENT IN THE STANDARD TEST METHOD. THE OBSERVED WATER LEVELS OR SOIL MOISTURE CONDITIONS INDICATED IN THE SUBSURFACE INVESTIGATIONS ARE AS RECORDED AT THE TIME OF THE INVESTIGATION. THESE WATER LEVELS OR SOIL MOISTURE CONDITIONS MAY VARY CONSIDERABLY WITH TIME ACCORDING TO CLIMATIC CONDITIONS INCLUDING TEMPERATURES, PRECIPITATION, AND WIND, AS WELL AS OTHER NON-CLIMATIC FACTORS.

THE BIDDER OR CONTRACTOR IS CAUTIONED THAT DETAILS SHOWN ON THE SUBSURFACE PLANS ARE PRELIMINARY ONLY AND IN MANY CASES THE FINAL DESIGN DETAILS ARE DIFFERENT. FOR BIDDING AND CONSTRUCTION PURPOSES, REFER TO THE CONSTRUCTION PLANS AND DOCUMENTS FOR FINAL DESIGN INFORMATION ON THIS PROJECT. THE DEPARTMENT DOES NOT WARRANT OR GUARANTEE THE SUFFICIENCY OR ACCURACY OF THE INVESTIGATION MADE, NOR THE INTERPRETATIONS MADE, OR OPINION OF THE DEPARTMENT AS TO THE TYPE OF MATERIALS AND CONDITIONS TO BE ENCOUNTERED. THE BIDDER OR CONTRACTOR IS CAUTIONED TO MAKE SUCH INDEPENDENT SUBSURFACE INVESTIGATIONS AS HE DEEMS NECESSARY TO SATISFY HIMSELF AS TO CONDITIONS TO BE ENCOUNTERED ON THIS PROJECT. THE CONTRACTOR SHALL HAVE NO CLAIM FOR ADDITIONAL COMPENSATION OR FOR AN EXTENSION OF TIME FOR ANY REASON RESULTING FROM THE ACTUAL CONDITIONS ENCOUNTERED AT THE SITE DIFFERING FROM THOSE INDICATED IN THE SUBSURFACE INFORMATION.

PERSONNEL

D.C. ELLIOT

C.J. COFFEY

L.A. RIDDLE

INVESTIGATED BY J.W. MANN

CHECKED BY W.D. FRYE

SUBMITTED BY W.D. FRYE

DATE MARCH 2012

NORTH CAROLINA LICENSED SEAL 1941 GEOLOGIST JOHN W. MANN 3/7/12

PROJECT: 45360.1.15

ID: BD-5114O

DRAWN BY: J.W. MANN

NOTE - THE INFORMATION CONTAINED HEREIN IS NOT IMPLIED OR GUARANTEED BY THE N. C. DEPARTMENT OF TRANSPORTATION AS BEING ACCURATE NOR IT IS CONSIDERED TO BE PART OF THE PLANS, SPECIFICATIONS, OR CONTRACT FOR THE PROJECT.

NOTE - BY HAVING REQUESTED THIS INFORMATION THE CONTRACTOR SPECIFICALLY WAIVES ANY CLAIMS FOR INCREASED COMPENSATION OR EXTENSION OF TIME BASED ON DIFFERENCES BETWEEN THE CONDITIONS INDICATED HEREIN AND THE ACTUAL CONDITIONS AT THE PROJECT SITE.

PROJECT REFERENCE NO.	SHEET NO.
45360.1.15 BD-5140	2 OF 9

NORTH CAROLINA DEPARTMENT OF TRANSPORTATION
DIVISION OF HIGHWAYS
GEOTECHNICAL ENGINEERING UNIT

SUBSURFACE INVESTIGATION

SOIL AND ROCK LEGEND, TERMS, SYMBOLS, AND ABBREVIATIONS

SOIL DESCRIPTION

SOIL IS CONSIDERED TO BE THE UNCONSOLIDATED, SEMI-CONSOLIDATED, OR WEATHERED EARTH MATERIALS THAT CAN BE PENETRATED WITH A CONTINUOUS FLIGHT POWER AUGER, AND YIELD LESS THAN 100 BLOWS PER FOOT ACCORDING TO STANDARD PENETRATION TEST (AASHTO T206, ASTM D-1586). SOIL CLASSIFICATION IS BASED ON THE AASHTO SYSTEM. BASIC DESCRIPTIONS GENERALLY SHALL INCLUDE: CONSISTENCY, COLOR, TEXTURE, MOISTURE, AASHTO CLASSIFICATION, AND OTHER PERTINENT FACTORS SUCH AS MINERALOGICAL COMPOSITION, ANGULARITY, STRUCTURE, PLASTICITY, ETC. EXAMPLE:

VERY STIFF, GRAY, SILTY CLAY, MOIST WITH INTERBEDDED FINE SAND LAYERS, HIGHLY PLASTIC, A-7-6

SOIL LEGEND AND AASHTO CLASSIFICATION

GENERAL CLASS.	GRANULAR MATERIALS (≤ 35% PASSING #200)							SILT-CLAY MATERIALS (> 35% PASSING #200)				ORGANIC MATERIALS		
GROUP CLASS.	A-1		A-3	A-2				A-4	A-5	A-6	A-7	A-1, A-2 A-3	A-4, A-5 A-6, A-7	
	A-1-a	A-1-b		A-2-4	A-2-5	A-2-6	A-2-7				A-7-5 A-7-6			
SYMBOL														
% PASSING # 10	50 MX											GRANULAR SOILS	SILT-CLAY SOILS	MUCK, PEAT
# 40	30 MX	50 MX	51 MN											
# 200	15 MX	25 MX	10 MX	35 MX	35 MX	35 MX	35 MX	36 MN	36 MN	36 MN	36 MN			
LIQUID LIMIT	6 MX		NP	40 MX	41 MN	40 MX	41 MN	40 MX	41 MN	40 MX	41 MN	SOILS WITH LITTLE OR MODERATE AMOUNTS OF ORGANIC MATTER		HIGHLY ORGANIC SOILS
PLASTIC INDEX				10 MX	10 MX	11 MN	11 MN	10 MX	10 MX	11 MN	11 MN			
GROUP INDEX	0		0	0		4 MX		8 MX	12 MX	16 MX	No MX			
USUAL TYPES OF MAJOR MATERIALS	STONE FRAGS. GRAVEL, AND SAND		FINE SAND	SILTY OR CLAYEY GRAVEL AND SAND				SILTY SOILS		CLAYEY SOILS				
GEN. RATING AS A SUBGRADE	EXCELLENT TO GOOD							FAIR TO POOR				FAIR TO POOR	POOR	UNSUITABLE

PI OF A-7-5 SUBGROUP IS ≤ LL - 30 ; PI OF A-7-6 SUBGROUP IS > LL - 30

CONSISTENCY OR DENSENESS

PRIMARY SOIL TYPE	COMPACTNESS OR CONSISTENCY	RANGE OF STANDARD PENETRATION RESISTENCE (N-VALUE)	RANGE OF UNCONFINED COMPRESSIVE STRENGTH (TONS/FT^2)
GENERALLY GRANULAR MATERIAL (NON-COHESIVE)	VERY LOOSE LOOSE MEDIUM DENSE DENSE VERY DENSE	<4 4 TO 10 10 TO 30 30 TO 50 >50	N/A
GENERALLY SILT-CLAY MATERIAL (COHESIVE)	VERY SOFT SOFT MEDIUM STIFF STIFF VERY STIFF HARD	<2 2 TO 4 4 TO 8 8 TO 15 15 TO 30 >30	<0.25 0.25 TO 0.50 0.5 TO 1.0 1 TO 2 2 TO 4 >4

TEXTURE OR GRAIN SIZE

U.S. STD. SIEVE SIZE	4	10	40	60	200	270
OPENING (MM)	4.76	2.00	0.42	0.25	0.075	0.053

BOULDER (BLDR.)	COBBLE (COB.)	GRAVEL (GR.)	COARSE SAND (CSE. SD.)	FINE SAND (F SD.)	SILT (SL.)	CLAY (CL.)

GRAIN SIZE MM: 305 | 75 | 2.0 | 0.25 | 0.05 | 0.005
GRAIN SIZE IN.: 12 | 3

SOIL MOISTURE - CORRELATION OF TERMS

SOIL MOISTURE SCALE (ATTERBERG LIMITS)	FIELD MOISTURE DESCRIPTION	GUIDE FOR FIELD MOISTURE DESCRIPTION
	- SATURATED - (SAT.)	USUALLY LIQUID; VERY WET, USUALLY FROM BELOW THE GROUND WATER TABLE
LL — LIQUID LIMIT PLASTIC RANGE (PI) PL — PLASTIC LIMIT	- WET - (W)	SEMISOLID; REQUIRES DRYING TO ATTAIN OPTIMUM MOISTURE
OM — OPTIMUM MOISTURE SL — SHRINKAGE LIMIT	- MOIST - (M)	SOLID; AT OR NEAR OPTIMUM MOISTURE
	- DRY - (D)	REQUIRES ADDITIONAL WATER TO ATTAIN OPTIMUM MOISTURE

PLASTICITY

	PLASTICITY INDEX (PI)	DRY STRENGTH
NONPLASTIC	0-5	VERY LOW
LOW PLASTICITY	6-15	SLIGHT
MED. PLASTICITY	16-25	MEDIUM
HIGH PLASTICITY	26 OR MORE	HIGH

COLOR

DESCRIPTIONS MAY INCLUDE COLOR OR COLOR COMBINATIONS (TAN, RED, YELLOW-BROWN, BLUE-GRAY). MODIFIERS SUCH AS LIGHT, DARK, STREAKED, ETC. ARE USED TO DESCRIBE APPEARANCE.

GRADATION

WELL GRADED - INDICATES A GOOD REPRESENTATION OF PARTICLE SIZES FROM FINE TO COARSE.
UNIFORM - INDICATES THAT SOIL PARTICLES ARE ALL APPROXIMATELY THE SAME SIZE. (ALSO POORLY GRADED)
GAP-GRADED - INDICATES A MIXTURE OF UNIFORM PARTICLES OF TWO OR MORE SIZES.

ANGULARITY OF GRAINS

THE ANGULARITY OR ROUNDNESS OF SOIL GRAINS IS DESIGNATED BY THE TERMS: ANGULAR, SUBANGULAR, SUBROUNDED, OR ROUNDED.

MINERALOGICAL COMPOSITION

MINERAL NAMES SUCH AS QUARTZ, FELDSPAR, MICA, TALC, KAOLIN, ETC. ARE USED IN DESCRIPTIONS WHENEVER THEY ARE CONSIDERED OF SIGNIFICANCE.

COMPRESSIBILITY

SLIGHTLY COMPRESSIBLE	LIQUID LIMIT LESS THAN 31
MODERATELY COMPRESSIBLE	LIQUID LIMIT EQUAL TO 31-50
HIGHLY COMPRESSIBLE	LIQUID LIMIT GREATER THAN 50

PERCENTAGE OF MATERIAL

ORGANIC MATERIAL	GRANULAR SOILS	SILT - CLAY SOILS
TRACE OF ORGANIC MATTER	2 - 3%	3 - 5%
LITTLE ORGANIC MATTER	3 - 5%	5 - 12%
MODERATELY ORGANIC	5 - 10%	12 - 20%
HIGHLY ORGANIC	>10%	>20%

OTHER MATERIAL	
TRACE	1 - 10%
LITTLE	10 - 20%
SOME	20 - 35%
HIGHLY	35% AND ABOVE

GROUND WATER

- WATER LEVEL IN BORE HOLE IMMEDIATELY AFTER DRILLING
- STATIC WATER LEVEL AFTER 24 HOURS
- PW PERCHED WATER, SATURATED ZONE, OR WATER BEARING STRATA
- SPRING OR SEEP

MISCELLANEOUS SYMBOLS

- ROADWAY EMBANKMENT (RE) WITH SOIL DESCRIPTION
- SOIL SYMBOL
- ARTIFICIAL FILL (AF) OTHER THAN ROADWAY EMBANKMENT
- INFERRED SOIL BOUNDARY
- INFERRED ROCK LINE
- ALLUVIAL SOIL BOUNDARY
- 25/025 DIP & DIP DIRECTION OF ROCK STRUCTURES
- SPT DPT DMT VST PMT TEST BORING
- AUGER BORING
- CORE BORING
- MW MONITORING WELL
- PIEZOMETER INSTALLATION
- SLOPE INDICATOR INSTALLATION
- CONE PENETROMETER TEST
- SOUNDING ROD
- TEST BORING W/ CORE
- SPT N-VALUE
- REF SPT REFUSAL

ABBREVIATIONS

AR - AUGER REFUSAL
BT - BORING TERMINATED
CL. - CLAY
CPT - CONE PENETRATION TEST
CSE. - COARSE
DMT - DILATOMETER TEST
DPT - DYNAMIC PENETRATION TEST
e - VOID RATIO
F - FINE
FOSS. - FOSSILIFEROUS
FRAC. - FRACTURED, FRACTURES
FRAGS. - FRAGMENTS
HI. - HIGHLY
MED. - MEDIUM
MICA. - MICACEOUS
MOD. - MODERATELY
NP - NON PLASTIC
ORG. - ORGANIC
PMT - PRESSUREMETER TEST
SAP. - SAPROLITIC
SD. - SAND, SANDY
SL. - SILT, SILTY
SLI. - SLIGHTLY
TCR - TRICONE REFUSAL
w - MOISTURE CONTENT
V - VERY
VST - VANE SHEAR TEST
WEA. - WEATHERED
γ - UNIT WEIGHT
γ_d - DRY UNIT WEIGHT

SAMPLE ABBREVIATIONS
S - BULK
SS - SPLIT SPOON
ST - SHELBY TUBE
RS - ROCK
RT - RECOMPACTED TRIAXIAL
CBR - CALIFORNIA BEARING RATIO

EQUIPMENT USED ON SUBJECT PROJECT

DRILL UNITS:
- [ ] MOBILE B-___
- [ ] BK-51
- [ ] CME-45C
- [X] CME-550
- [ ] PORTABLE HOIST
- [ ] _____
- [ ] _____

ADVANCING TOOLS:
- [ ] CLAY BITS
- [ ] 6" CONTINUOUS FLIGHT AUGER
- [ ] 8" HOLLOW AUGERS
- [ ] HARD FACED FINGER BITS
- [ ] TUNG.-CARBIDE INSERTS
- [X] CASING [X] W/ ADVANCER
- [ ] TRICONE ____" STEEL TEETH
- [ ] TRICONE ____" TUNG.-CARB.
- [ ] CORE BIT
- [ ] _____

HAMMER TYPE:
- [X] AUTOMATIC
- [ ] MANUAL

CORE SIZE:
- [ ] -B_____
- [X] -N XWL
- [ ] -H_____

HAND TOOLS:
- [ ] POST HOLE DIGGER
- [ ] HAND AUGER
- [ ] SOUNDING ROD
- [ ] VANE SHEAR TEST
- [ ] _____

ROCK DESCRIPTION

HARD ROCK IS NON-COASTAL PLAIN MATERIAL THAT IF TESTED, WOULD YIELD SPT REFUSAL. AN INFERRED ROCK LINE INDICATES THE LEVEL AT WHICH NON-COASTAL PLAIN MATERIAL WOULD YIELD SPT REFUSAL. SPT REFUSAL IS PENETRATION BY A SPLIT SPOON SAMPLER EQUAL TO OR LESS THAN 0.1 FOOT PER 60 BLOWS. IN NON-COASTAL PLAIN MATERIAL, THE TRANSITION BETWEEN SOIL AND ROCK IS OFTEN REPRESENTED BY A ZONE OF WEATHERED ROCK.
ROCK MATERIALS ARE TYPICALLY DIVIDED AS FOLLOWS:

WEATHERED ROCK (WR)	NON-COASTAL PLAIN MATERIAL THAT WOULD YIELD SPT N VALUES > 100 BLOWS PER FOOT IF TESTED.
CRYSTALLINE ROCK (CR)	FINE TO COARSE GRAIN IGNEOUS AND METAMORPHIC ROCK THAT WOULD YIELD SPT REFUSAL IF TESTED. ROCK TYPE INCLUDES GRANITE, GNEISS, GABBRO, SCHIST, ETC.
NON-CRYSTALLINE ROCK (NCR)	FINE TO COARSE GRAIN METAMORPHIC AND NON-COASTAL PLAIN SEDIMENTARY ROCK THAT WOULD YEILD SPT REFUSAL IF TESTED. ROCK TYPE INCLUDES PHYLLITE, SLATE, SANDSTONE, ETC.
COASTAL PLAIN SEDIMENTARY ROCK (CP)	COASTAL PLAIN SEDIMENTS CEMENTED INTO ROCK, BUT MAY NOT YIELD SPT REFUSAL. ROCK TYPE INCLUDES LIMESTONE, SANDSTONE, CEMENTED SHELL BEDS, ETC.

WEATHERING

FRESH	ROCK FRESH, CRYSTALS BRIGHT, FEW JOINTS MAY SHOW SLIGHT STAINING. ROCK RINGS UNDER HAMMER IF CRYSTALLINE.
VERY SLIGHT (V SLI.)	ROCK GENERALLY FRESH, JOINTS STAINED, SOME JOINTS MAY SHOW THIN CLAY COATINGS IF OPEN, CRYSTALS ON A BROKEN SPECIMEN FACE SHINE BRIGHTLY. ROCK RINGS UNDER HAMMER BLOWS IF OF A CRYSTALLINE NATURE.
SLIGHT (SLI.)	ROCK GENERALLY FRESH, JOINTS STAINED AND DISCOLORATION EXTENDS INTO ROCK UP TO 1 INCH. OPEN JOINTS MAY CONTAIN CLAY. IN GRANITOID ROCKS SOME OCCASIONAL FELDSPAR CRYSTALS ARE DULL AND DISCOLORED. CRYSTALLINE ROCKS RING UNDER HAMMER BLOWS.
MODERATE (MOD.)	SIGNIFICANT PORTIONS OF ROCK SHOW DISCOLORATION AND WEATHERING EFFECTS. IN GRANITOID ROCKS, MOST FELDSPARS ARE DULL AND DISCOLORED, SOME SHOW CLAY. ROCK HAS DULL SOUND UNDER HAMMER BLOWS AND SHOWS SIGNIFICANT LOSS OF STRENGTH AS COMPARED WITH FRESH ROCK.
MODERATELY SEVERE (MOD. SEV.)	ALL ROCK EXCEPT QUARTZ DISCOLORED OR STAINED. IN GRANITOID ROCKS, ALL FELDSPARS DULL AND DISCOLORED AND A MAJORITY SHOW KAOLINIZATION. ROCK SHOWS SEVERE LOSS OF STRENGTH AND CAN BE EXCAVATED WITH A GEOLOGIST'S PICK. ROCK GIVES "CLUNK" SOUND WHEN STRUCK. *IF TESTED, WOULD YIELD SPT REFUSAL*
SEVERE (SEV.)	ALL ROCK EXCEPT QUARTZ DISCOLORED OR STAINED. ROCK FABRIC CLEAR AND EVIDENT BUT REDUCED IN STRENGTH TO STRONG SOIL. IN GRANITOID ROCKS ALL FELDSPARS ARE KAOLINIZED TO SOME EXTENT. SOME FRAGMENTS OF STRONG ROCK USUALLY REMAIN. *IF TESTED, YIELDS SPT N VALUES > 100 BPF*
VERY SEVERE (V SEV.)	ALL ROCK EXCEPT QUARTZ DISCOLORED OR STAINED. ROCK FABRIC ELEMENTS ARE DISCERNIBLE BUT THE MASS IS EFFECTIVELY REDUCED TO SOIL STATUS, WITH ONLY FRAGMENTS OF STRONG ROCK REMAINING. SAPROLITE IS AN EXAMPLE OF ROCK WEATHERED TO A DEGREE SUCH THAT ONLY MINOR VESTIGES OF THE ORIGINAL ROCK FABRIC REMAIN. *IF TESTED, YIELDS SPT N VALUES < 100 BPF*
COMPLETE	ROCK REDUCED TO SOIL. ROCK FABRIC NOT DISCERNIBLE, OR DISCERNIBLE ONLY IN SMALL AND SCATTERED CONCENTRATIONS. QUARTZ MAY BE PRESENT AS DIKES OR STRINGERS. SAPROLITE IS ALSO AN EXAMPLE.

ROCK HARDNESS

VERY HARD	CANNOT BE SCRATCHED BY KNIFE OR SHARP PICK. BREAKING OF HAND SPECIMENS REQUIRES SEVERAL HARD BLOWS OF THE GEOLOGIST'S PICK.
HARD	CAN BE SCRATCHED BY KNIFE OR PICK ONLY WITH DIFFICULTY. HARD HAMMER BLOWS REQUIRED TO DETACH HAND SPECIMEN.
MODERATELY HARD	CAN BE SCRATCHED BY KNIFE OR PICK. GOUGES OR GROOVES TO 0.25 INCHES DEEP CAN BE EXCAVATED BY HARD BLOW OF A GEOLOGIST'S PICK. HAND SPECIMENS CAN BE DETACHED BY MODERATE BLOWS.
MEDIUM HARD	CAN BE GROOVED OR GOUGED 0.05 INCHES DEEP BY FIRM PRESSURE OF KNIFE OR PICK POINT. CAN BE EXCAVATED IN SMALL CHIPS TO PEICES 1 INCH MAXIMUM SIZE BY HARD BLOWS OF THE POINT OF A GEOLOGIST'S PICK.
SOFT	CAN BE GROVED OR GOUGED READILY BY KNIFE OR PICK. CAN BE EXCAVATED IN FRAGMENTS FROM CHIPS TO SEVERAL INCHES IN SIZE BY MODERATE BLOWS OF A PICK POINT. SMALL, THIN PIECES CAN BE BROKEN BY FINGER PRESSURE.
VERY SOFT	CAN BE CARVED WITH KNIFE. CAN BE EXCAVATED READILY WITH POINT OF PICK. PIECES 1 INCH OR MORE IN THICKNESS CAN BE BROKEN BY FINGER PRESSURE. CAN BE SCRATCHED READILY BY FINGERNAIL.

FRACTURE SPACING

TERM	SPACING
VERY WIDE	MORE THAN 10 FEET
WIDE	3 TO 10 FEET
MODERATELY CLOSE	1 TO 3 FEET
CLOSE	0.16 TO 1 FEET
VERY CLOSE	LESS THAN 0.16 FEET

BEDDING

TERM	THICKNESS
VERY THICKLY BEDDED	> 4 FEET
THICKLY BEDDED	1.5 - 4 FEET
THINLY BEDDED	0.16 - 1.5 FEET
VERY THINLY BEDDED	0.03 - 0.16 FEET
THICKLY LAMINATED	0.008 - 0.03 FEET
THINLY LAMINATED	< 0.008 FEET

INDURATION

FOR SEDIMENTARY ROCKS, INDURATION IS THE HARDENING OF THE MATERIAL BY CEMENTING, HEAT, PRESSURE, ETC.

FRIABLE	RUBBING WITH FINGER FREES NUMEROUS GRAINS; GENTLE BLOW BY HAMMER DISINTEGRATES SAMPLE.
MODERATELY INDURATED	GRAINS CAN BE SEPARATED FROM SAMPLE WITH STEEL PROBE; BREAKS EASILY WHEN HIT WITH HAMMER.
INDURATED	GRAINS ARE DIFFICULT TO SEPARATE WITH STEEL PROBE; DIFFICULT TO BREAK WITH HAMMER.
EXTREMELY INDURATED	SHARP HAMMER BLOWS REQUIRED TO BREAK SAMPLE; SAMPLE BREAKS ACROSS GRAINS.

TERMS AND DEFINITIONS

ALLUVIUM (ALLUV.) - SOILS THAT HAVE BEEN TRANSPORTED BY WATER.

AQUIFER - A WATER BEARING FORMATION OR STRATA.

ARENACEOUS - APPLIED TO ROCKS THAT HAVE BEEN DERIVED FROM SAND OR THAT CONTAIN SAND.

ARGILLACEOUS - APPLIED TO ALL ROCKS OR SUBSTANCES COMPOSED OF CLAY MINERALS, OR HAVING A NOTABLE PROPORTION OF CLAY IN THEIR COMPOSITION, AS SHALE, SLATE, ETC.

ARTESIAN - GROUND WATER THAT IS UNDER SUFFICIENT PRESSURE TO RISE ABOVE THE LEVEL AT WHICH IT IS ENCOUNTERED, BUT WHICH DOES NOT NECESSARILY RISE TO OR ABOVE THE GROUND SURFACE.

CALCAREOUS (CALC.) - SOILS THAT CONTAIN APPRECIABLE AMOUNTS OF CALCIUM CARBONATE.

COLLUVIUM - ROCK FRAGMENTS MIXED WITH SOIL DEPOSITED BY GRAVITY ON SLOPE OR AT BOTTOM OF SLOPE.

CORE RECOVERY (REC.) - TOTAL LENGTH OF ALL MATERIAL RECOVERED IN THE CORE BARREL DIVIDED BY TOTAL LENGTH OF CORE RUN AND EXPRESSED AS A PERCENTAGE.

DIKE - A TABULAR BODY OF IGNEOUS ROCK THAT CUTS ACROSS THE STRUCTURE OF ADJACENT ROCKS OR CUTS MASSIVE ROCK.

DIP - THE ANGLE AT WHICH A STRATUM OR ANY PLANAR FEATURE IS INCLINED FROM THE HORIZONTAL.

DIP DIRECTION (DIP AZIMUTH) - THE DIRECTION OR BEARING OF THE HORIZONTAL TRACE OF THE LINE OF DIP, MEASURED CLOCKWISE FROM NORTH.

FAULT - A FRACTURE OR FRACTURE ZONE ALONG WHICH THERE HAS BEEN DISPLACEMENT OF THE SIDES RELATIVE TO ONE ANOTHER PARALLEL TO THE FRACTURE.

FISSILE - A PROPERTY OF SPLITTING ALONG CLOSELY SPACED PARALLEL PLANES.

FLOAT - ROCK FRAGMENTS ON SURFACE NEAR THEIR ORIGINAL POSITION AND DISLODGED FROM PARENT MATERIAL.

FLOOD PLAIN (FP) - LAND BORDERING A STREAM, BUILT OF SEDIMENTS DEPOSITED BY THE STREAM.

FORMATION (FM.) - A MAPPABLE GEOLOGIC UNIT THAT CAN BE RECOGNIZED AND TRACED IN THE FIELD.

JOINT - FRACTURE IN ROCK ALONG WHICH NO APPRECIABLE MOVEMENT HAS OCCURRED.

LEDGE - A SHELF-LIKE RIDGE OR PROJECTION OF ROCK WHOSE THICKNESS IS SMALL COMPARED TO ITS LATERAL EXTENT.

LENS - A BODY OF SOIL OR ROCK THAT THINS OUT IN ONE OR MORE DIRECTIONS.

MOTTLED (MOT.) - IRREGULARLY MARKED WITH SPOTS OF DIFFERENT COLORS. MOTTLING IN SOILS USUALLY INDICATES POOR AERATION AND LACK OF GOOD DRAINAGE.

PERCHED WATER - WATER MAINTAINED ABOVE THE NORMAL GROUND WATER LEVEL BY THE PRESENCE OF AN INTERVENING IMPERVIOUS STRATUM.

RESIDUAL (RES.) SOIL - SOIL FORMED IN PLACE BY THE WEATHERING OF ROCK.

ROCK QUALITY DESIGNATION (RQD) - A MEASURE OF ROCK QUALITY DESCRIBED BY TOTAL LENGTH OF ROCK SEGMENTS EQUAL TO OR GREATER THAN 4 INCHES DIVIDED BY THE TOTAL LENGTH OF CORE RUN AND EXPRESSED AS A PERCENTAGE.

SAPROLITE (SAP.) - RESIDUAL SOIL THAT RETAINS THE RELIC STRUCTURE OR FABRIC OF THE PARENT ROCK.

SILL - AN INTRUSIVE BODY OF IGNEOUS ROCK OF APPROXIMATELY UNIFORM THICKNESS AND RELATIVELY THIN COMPARED WITH ITS LATERAL EXTENT, THAT HAS BEEN EMPLACED PARALLEL TO THE BEDDING OR SCHISTOSITY OF THE INTRUDED ROCKS.

SLICKENSIDE - POLISHED AND STRIATED SURFACE THAT RESULTS FROM FRICTION ALONG A FAULT OR SLIP PLANE.

STANDARD PENETRATION TEST (PENETRATION RESISTANCE) (SPT) - NUMBER OF BLOWS (N OR BPF) OF A 140 LB. HAMMER FALLING 30 INCHES REQUIRED TO PRODUCE A PENETRATION OF 1 FOOT INTO SOIL WITH A 2 INCH OUTSIDE DIAMETER SPLIT SPOON SAMPLER. SPT REFUSAL IS PENETRATION EQUAL TO OR LESS THAN 0.1 FOOT PER 60 BLOWS.

STRATA CORE RECOVERY (SREC.) - TOTAL LENGTH OF STRATA MATERIAL RECOVERED DIVIDED BY TOTAL LENGTH OF STRATUM AND EXPRESSED AS A PERCENTAGE.

STRATA ROCK QUALITY DESIGNATION (SRQD) - A MEASURE OF ROCK QUALITY DESCRIBED BY TOTAL LENGTH OF ROCK SEGMENTS WITHIN A STRATUM EQUAL TO OR GREATER THAN 4 INCHES DIVIDED BY THE TOTAL LENGTH OF STRATA AND EXPRESSED AS A PERCENTAGE.

TOPSOIL (TS.) - SURFACE SOILS USUALLY CONTAINING ORGANIC MATTER.

BENCH MARK: BM #1: RR SPIKE -L- STA. 12+76.65 28.16 RT.

ELEVATION: 267.61 FT.

NOTES:

REVISED 09/23/09

PROJECT REFERENCE NO.	SHEET
45360.1.15 BD-5114O	3 OF 9

SITE PLAN

0 10 20
FEET

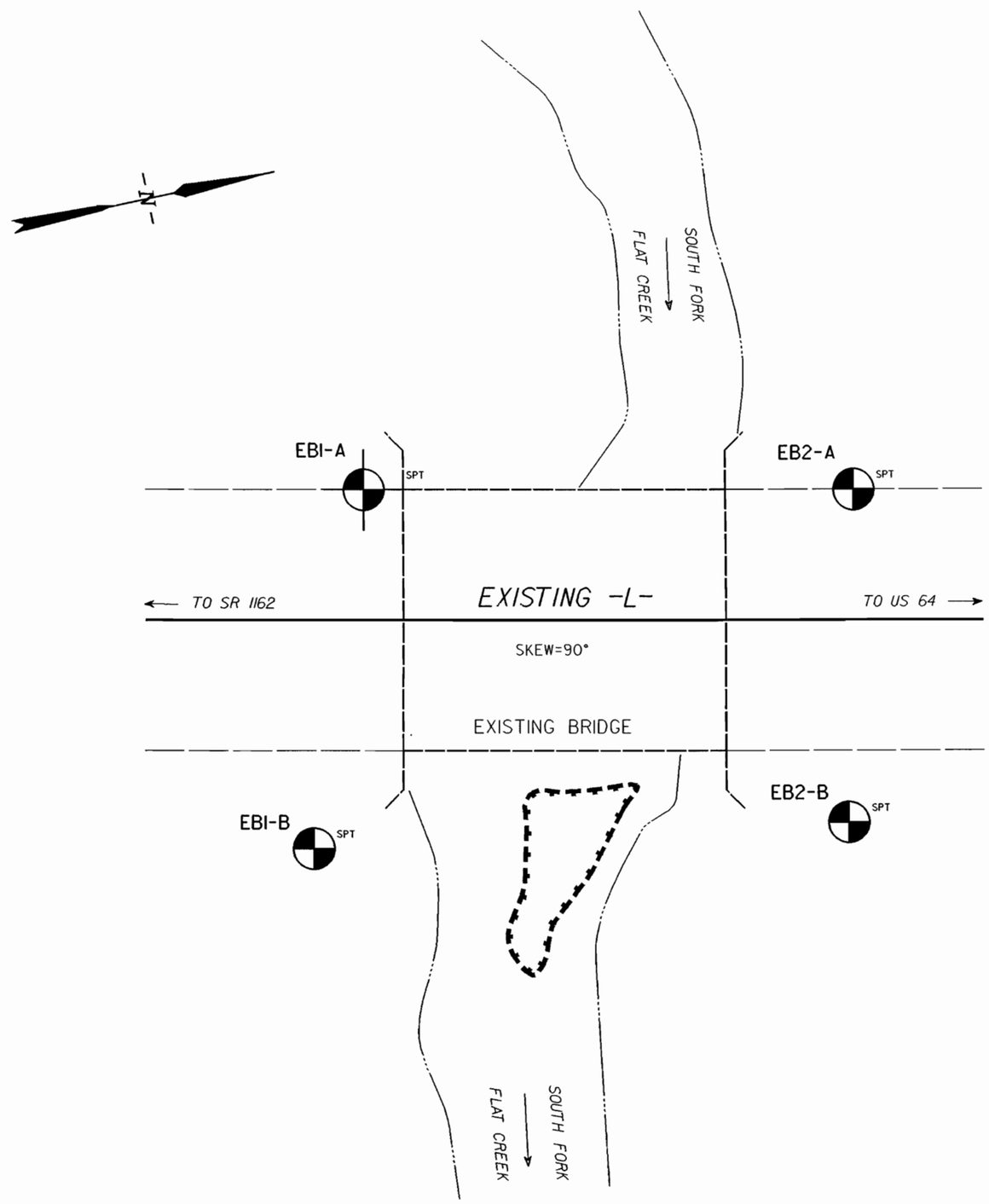

DRAWING APPROXIMATE &
NOT COORDINATELY CORRECT

PROJECT REFERENCE NO.	SHEET
45360.1.15 BD-5114O	4 OF 9

PROFILE 12' LT OF EXISTING -L-

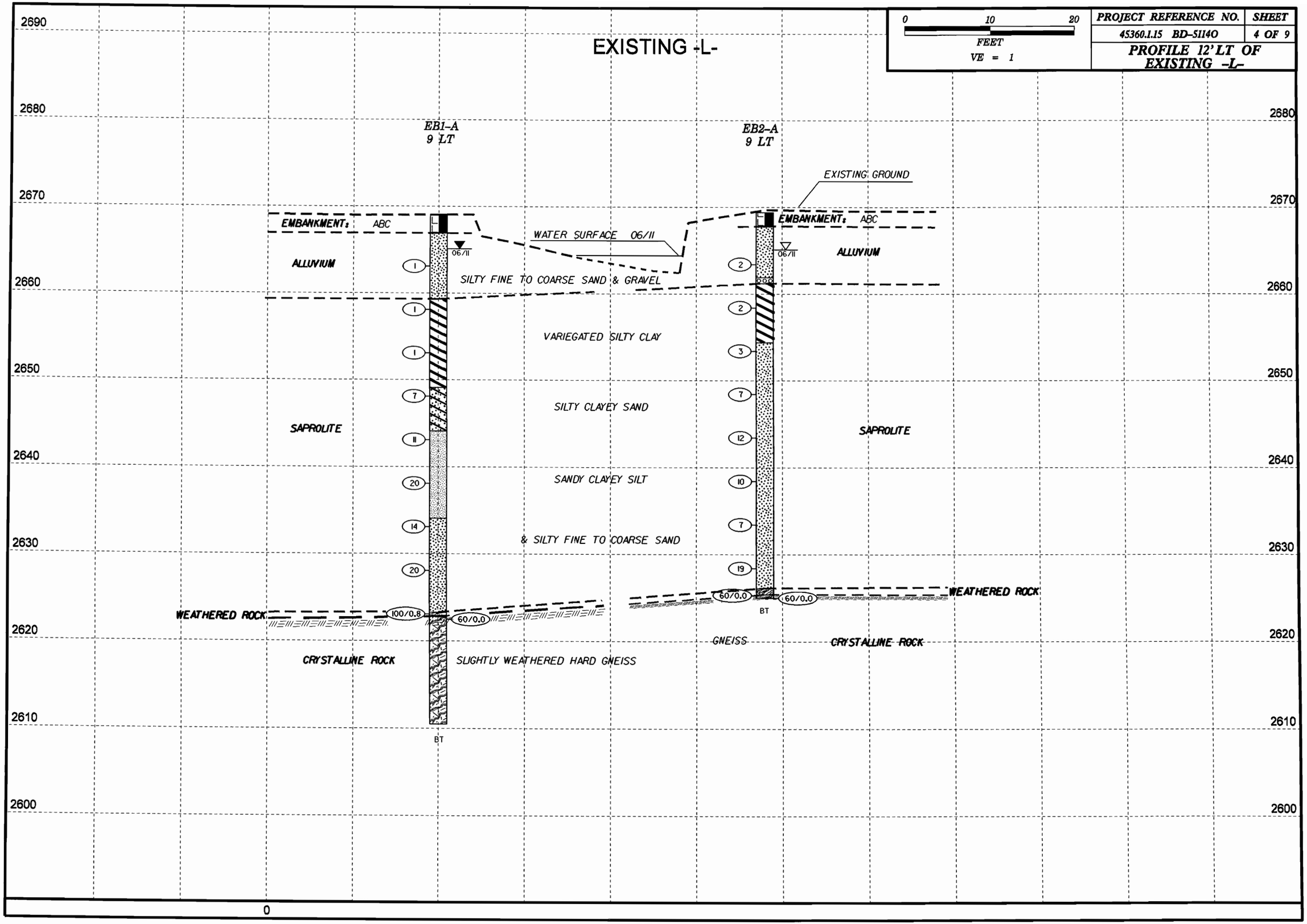

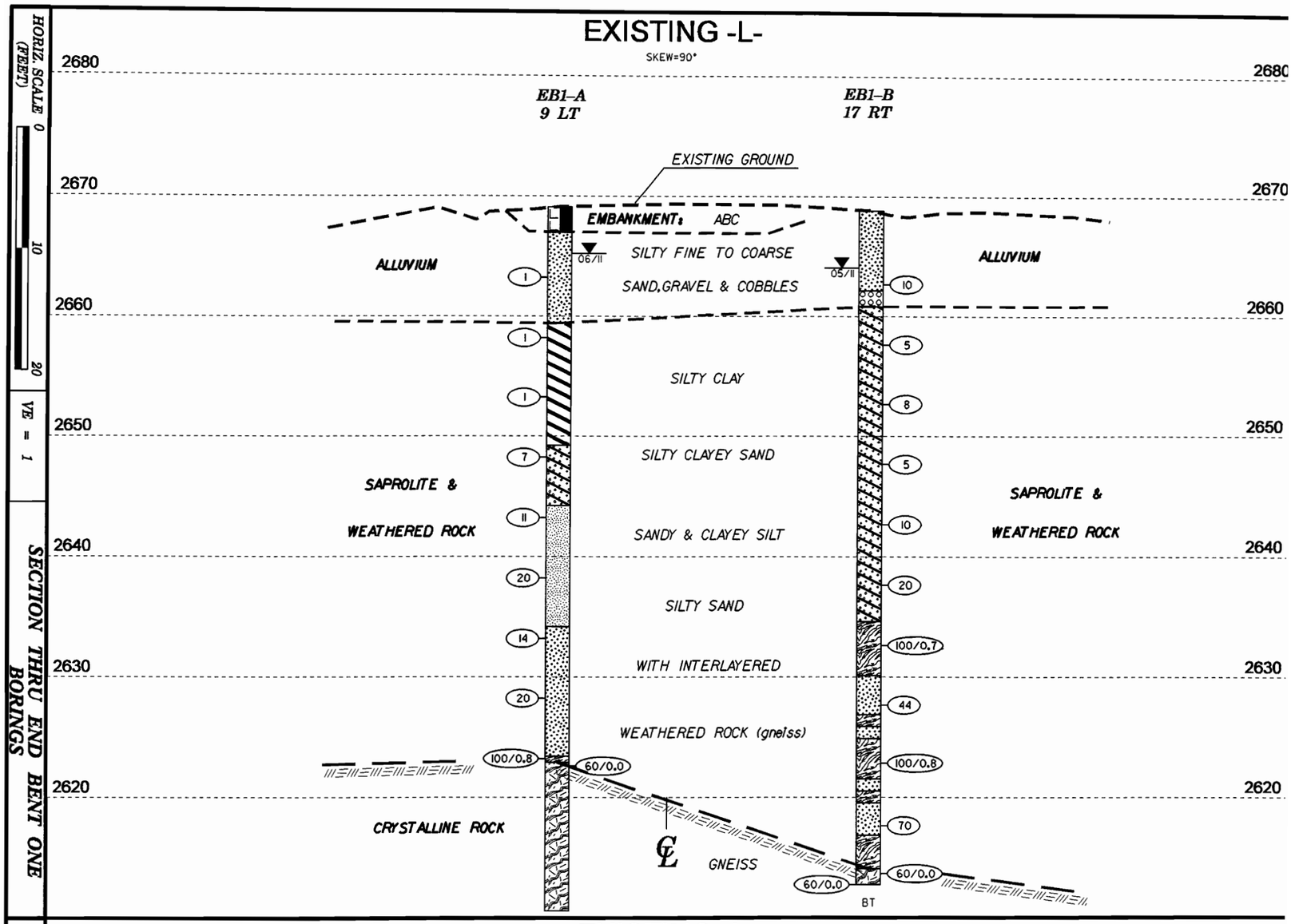

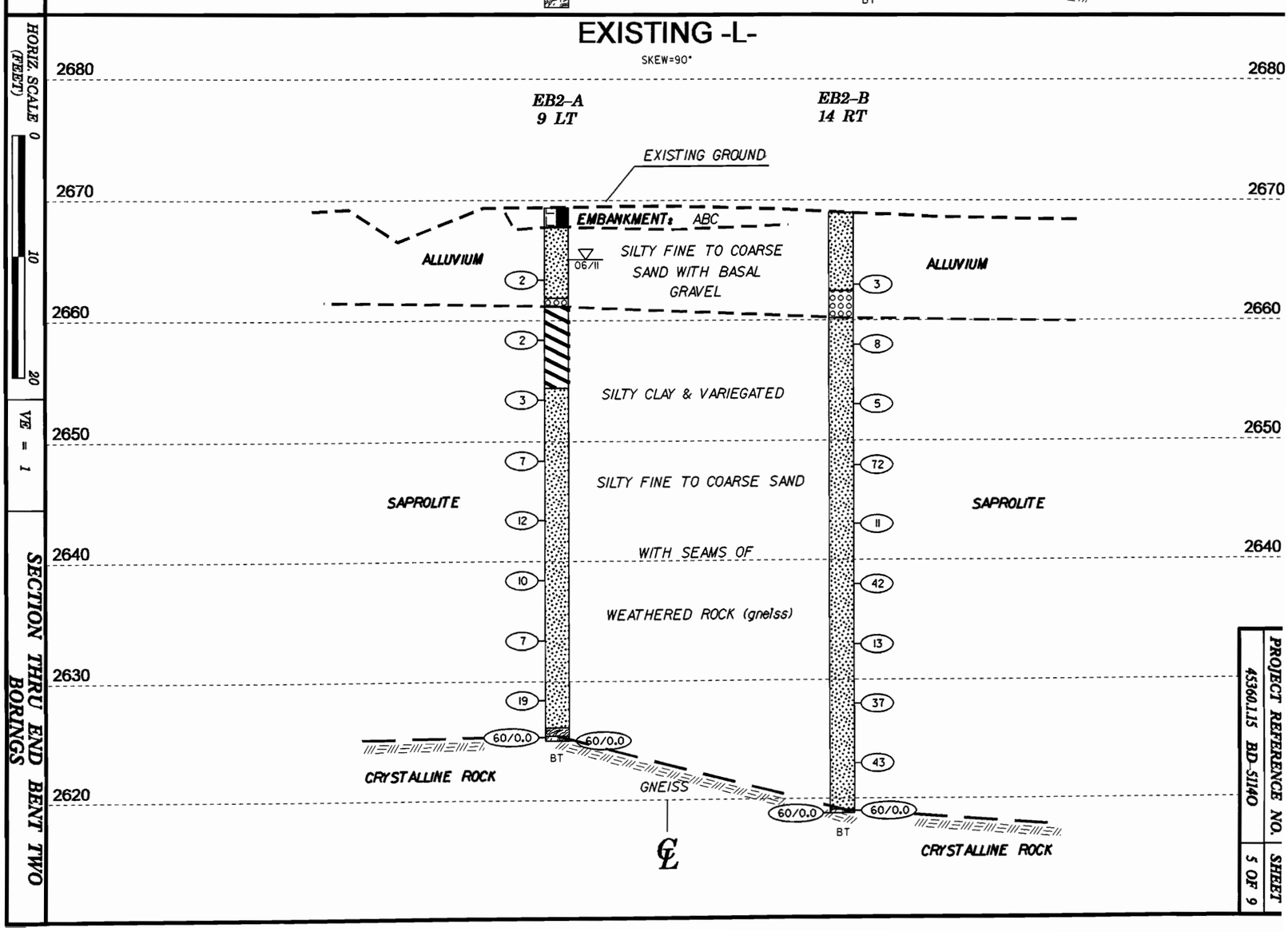

PROJECT REFERENCE NO.	SHEET
45360.1.15 BD-5114O	5 OF 9

NCDOT GEOTECHNICAL ENGINEERING UNIT
BORELOG REPORT

WBS 45360.1.15	**TIP** B-5114O	**COUNTY** TRANSYLVANIA	**GEOLOGIST** Elliott, D. C.
SITE DESCRIPTION Bridge No. 130 on SR 1147 over South Fork Flat Creek			**GROUND WTR (ft)**
BORING NO. EB1-A	**STATION** N/A	**OFFSET** 9 ft LT	**ALIGNMENT** Existing -L- — **0 HR.** N/A
COLLAR ELEV. 2,669.2 ft	**TOTAL DEPTH** 58.5 ft	**NORTHING** N/A	**EASTING** N/A — **24 HR.** 3.9
DRILL RIG/HAMMER EFF./DATE AFO0071 CME-550X 72% 09/03/2009		**DRILL METHOD** NW Casing W/SPT & Core	**HAMMER TYPE** Automatic
DRILLER Coffey, Jr., C.	**START DATE** 06/01/11	**COMP. DATE** 06/01/11	**SURFACE WATER DEPTH** N/A

ELEV (ft)	DRIVE ELEV (ft)	DEPTH (ft)	BLOW COUNT 0.5ft	0.5ft	0.5ft	BLOWS PER FOOT 0 25 50 75 100	SAMP. NO.	MOI	LOG	SOIL AND ROCK DESCRIPTION — ELEV. (ft)	DEPTH (ft)
2670											
										2,669.2 GROUND SURFACE	0.0
										ROADWAY EMBANKMENT Aggregate Base Coarse	
2665										2,667.1	2.1
	2,664.3	4.9								**ALLUVIAL** Dark brown silty fine to coarse SAND with trace organics	
			WOH	WOH	1	1					
2660											
	2,659.3	9.9								2,659.5	9.7
			WOH	WOH	1	1				**SAPROLITE** Tan-orange silty CLAY	
2655											
	2,654.3	14.9									
			WOH	WOH	1	1					
2650											
	2,649.3	19.9								2,649.3	19.9
			1	3	4	7				**SAPROLITE** Tan-orange silty clayey SAND	
2645											
	2,644.3	24.9								2,644.3	24.9
			2	4	7	11				**SAPROLITE** Variegated sandy & clayey SILT	
2640											
	2,639.3	29.9									
			6	6	14	20					
2635											
	2,634.3	34.9								2,634.3	34.9
			2	6	8	14				**SAPROLITE** White-tan=orange silty fine SAND	
2630											
	2,629.3	39.9									
			4	6	14	20					
2625											
	2,624.3	44.9								2,623.5	45.7
	2,622.7	46.5	28	31	69/0.3					2,623.0 **WEATHERED ROCK** (gneiss)	46.2
			60/0.0				100/0.8 60/0.0				
2620										**CRYSTALLINE ROCK** GNEISS Run 1: 46.5-48.5' REC=95% RQD=80% Run 2: 48.5-53.5' REC=70% RQD=42% Run 3: 53.5-58.5' REC=76% RQD=48%	
2615											
										2,610.7	58.5
										Boring Terminated at Elevation 2,610.7 ft In Crystalline Rock: (GNEISS)	

NCDOT BORE SINGLE B5114O_GEO_BH_BRDG0130.GPJ NC_DOT.GDT 3/6/12

NCDOT GEOTECHNICAL ENGINEERING UNIT
CORE BORING REPORT

WBS 45360.1.15	**TIP** B-5114O	**COUNTY** TRANSYLVANIA	**GEOLOGIST** Elliott, D. C.
SITE DESCRIPTION Bridge No. 130 on SR 1147 over South Fork Flat Creek			**GROUND WTR (ft)**
BORING NO. EB1-A	**STATION** N/A	**OFFSET** 9 ft LT	**ALIGNMENT** Existing -L- — **0 HR.** N/A
COLLAR ELEV. 2,669.2 ft	**TOTAL DEPTH** 58.5 ft	**NORTHING** N/A	**EASTING** N/A — **24 HR.** 3.9
DRILL RIG/HAMMER EFF./DATE AFO0071 CME-550X 72% 09/03/2009		**DRILL METHOD** NW Casing W/SPT & Core	**HAMMER TYPE** Automatic
DRILLER Coffey, Jr., C.	**START DATE** 06/01/11	**COMP. DATE** 06/01/11	**SURFACE WATER DEPTH** N/A
CORE SIZE NXWL	**TOTAL RUN** 12.0 ft		

ELEV (ft)	RUN ELEV (ft)	DEPTH (ft)	RUN (ft)	DRILL RATE (Min/ft)	RUN REC. (ft) %	RUN RQD (ft) %	SAMP. NO.	STRATA REC. (ft) %	STRATA RQD (ft) %	LOG	DESCRIPTION AND REMARKS — ELEV. (ft)	DEPTH (ft)
2622.69											Begin Coring @ 46.5 ft	
	2,622.7	46.5	2.0	*N=60/0.0* 2:17/1.0 1:48/1.0	(1.9) 95%	(1.6) 80%					**CRYSTALLINE ROCK** Gray, slightly weathered, hard GNEISS with interlayered granitoid. Fracture spacing is very close to moderately close with fracture angles highly variable. *(continued)*	
2620	2,620.7	48.5										
			5.0	1:08/1.0 2:49/1.0 1:20/1.0 1:21/1.0 1:24/1.0	(3.5) 70%	(4.2) 84%						
2615	2,615.7	53.5										
			5.0	1:17/1.0 1:14/1.0 0:48/1.0 0:53/1.0 1:31/1.0	(3.5) 70%	(2.1) 42%						
	2,610.7	58.5									2,610.7	58.5
											Boring Terminated at Elevation 2,610.7 ft In Crystalline Rock: (GNEISS)	

NCDOT CORE SINGLE B5114O_GEO_BH_BRDG0130.GPJ NC_DOT.GDT 3/6/12

NCDOT GEOTECHNICAL ENGINEERING UNIT
BORELOG REPORT

WBS 45360.1.15	**TIP** B-5114O	**COUNTY** TRANSYLVANIA	**GEOLOGIST** Elliott, D. C.
SITE DESCRIPTION Bridge No. 130 on SR 1147 over South Fork Flat Creek			**GROUND WTR (ft)**
BORING NO. EB1-B	**STATION** N/A	**OFFSET** 17 ft RT	**ALIGNMENT** Existing -L- — **0 HR.** N/A
COLLAR ELEV. 2,668.9 ft	**TOTAL DEPTH** 56.1 ft	**NORTHING** N/A	**EASTING** N/A — **24 HR.** 4.8
DRILL RIG/HAMMER EFF./DATE AFO0071 CME-550X 72% 09/03/2009		**DRILL METHOD** NW Casing w/ SPT	**HAMMER TYPE** Automatic
DRILLER Coffey, Jr., C.	**START DATE** 05/31/11	**COMP. DATE** 05/31/11	**SURFACE WATER DEPTH** N/A

ELEV (ft)	DRIVE ELEV (ft)	DEPTH (ft)	BLOW COUNT 0.5ft	0.5ft	0.5ft	BLOWS PER FOOT (0 25 50 75 100)	SAMP. NO.	MOI	LOG	SOIL AND ROCK DESCRIPTION — ELEV. (ft)	DEPTH (ft)
2670											
										2,668.9 GROUND SURFACE	0.0
2665										**ALLUVIAL** Dark brown silty fine to coarse SAND	
	2,663.7	5.2	WOH	3	7	10				2,662.2	6.7
2660										2,660.9 **ALLUVIAL** GRAVEL & COBBLES	8.0
	2,658.7	10.2	1	2	3	5				**SAPROLITE** Variegated silty clayey fine SAND	
2655											
	2,653.7	15.2	3	3	5	8					
2650											
	2,648.7	20.2	2	1	4	5					
2645											
	2,643.7	25.2	3	4	6	10					
2640											
	2,638.7	30.2	4	6	14	20					
2635										2,634.7	34.2
	2,633.7	35.2	42	53	47/0.2	100/0.7				**WEATHERED ROCK** (gneiss)	
2630										2,630.2 **SAPROLITE** SAND	38.7
	2,628.7	40.2	8	13	31	44				2,626.9	42.0
2625										2,625.9 **WEATHERED ROCK** (gneiss)	43.0
	2,623.7	45.2	29	71/0.3		0.8				2,624.9 **SAPROLITE** SAND	44.0
2620										2,621.6 **WEATHERED ROCK** (gneiss)	47.3
	2,618.7	50.2	25	35	35	70				2,620.6 **SAPROLITE** SAND	48.3
2615										2,619.6 **WEATHERED ROCK** (gneiss)	49.3
	2,613.7	55.2	60/0.0			60/0.0				2,616.9 **SAPROLITE** SAND	52.0
	2,612.8	56.1	60/0.0			60/0.0				2,614.1 **WEATHERED ROCK** (gneiss)	54.8
										2,612.8 **CRYSTALLINE ROCK** GNEISS	56.1

Boring Terminated with Casing Advancer Refusal at Elevation 2,612.8 ft In Crystalline Rock: (GNEISS)

NCDOT BORE SINGLE B5114O_GEO_BH_BRDG0130.GPJ NC_DOT.GDT 3/6/12

NCDOT GEOTECHNICAL ENGINEERING UNIT
BORELOG REPORT

WBS 45360.1.15	**TIP** B-5114O	**COUNTY** TRANSYLVANIA	**GEOLOGIST** Elliott, D. C.
SITE DESCRIPTION Bridge No. 130 on SR 1147 over South Fork Flat Creek			**GROUND WTR (ft)**
BORING NO. EB2-A	**STATION** N/A	**OFFSET** 9 ft LT	**ALIGNMENT** Existing -L- — **0 HR.** 4.3
COLLAR ELEV. 2,669.5 ft	**TOTAL DEPTH** 44.4 ft	**NORTHING** N/A	**EASTING** N/A — **24 HR.** N/A
DRILL RIG/HAMMER EFF./DATE AFO0071 CME-550X 72% 09/03/2009		**DRILL METHOD** NW Casing w/ SPT	**HAMMER TYPE** Automatic
DRILLER Coffey, Jr., C.	**START DATE** 06/06/11	**COMP. DATE** 06/06/11	**SURFACE WATER DEPTH** N/A

ELEV (ft)	DRIVE ELEV (ft)	DEPTH (ft)	BLOW COUNT 0.5ft	0.5ft	0.5ft	BLOWS PER FOOT 0 25 50 75 100	SAMP. NO.	MOI	LOG	SOIL AND ROCK DESCRIPTION ELEV. (ft)	DEPTH (ft)
2670										2,669.5 GROUND SURFACE	0.0
										2,667.9 **ROADWAY EMBANKMENT** AGGREGATE BASE COURSE	1.6
2665	2,664.5	5.0	WOH	1	1	2		▽		**ALLUVIAL** Dark brown silty fine SAND	
										2,662.0	7.5
2660	2,659.5	10.0	1	1	1	2				2,661.3 **ALLUVIAL** GRAVEL & COBBLES	8.2
										SAPROLITE Tan-orange silty CLAY	
2655	2,654.5	15.0	1	1	2	3				2,654.5 **SAPROLITE** Variegated silty fine to coarse SAND	15.0
2650	2,649.5	20.0	1	3	4	7					
2645	2,644.5	25.0	4	5	7	12					
2640	2,639.5	30.0	3	5	5	10					
2635	2,634.5	35.0	2	3	4	7					
2630	2,629.5	40.0	8	9	10	19					
	2,625.4	44.1								2,626.2	43.3
	2,625.1	44.4	60/0.0			60/0.0				2,625.5 **WEATHERED ROCK** (gneiss)	44.0
			60/0.0							2,625.1 **CRYSTALLINE ROCK** GNEISS	44.4
										Boring Terminated with Casing Advancer Refusal at Elevation 2,625.1 ft In Crystalline Rock: (GNEISS)	

NCDOT BORE SINGLE B5114O_GEO_BH_BRDG0130.GPJ NC_DOT.GDT 3/6/12

NCDOT GEOTECHNICAL ENGINEERING UNIT
BORELOG REPORT

WBS 45360.1.15	**TIP** B-5114O	**COUNTY** TRANSYLVANIA	**GEOLOGIST** Elliott, D. C.
SITE DESCRIPTION Bridge No. 130 on SR 1147 over South Fork Flat Creek			**GROUND WTR (ft)**
BORING NO. EB2-B	**STATION** N/A	**OFFSET** 14 ft RT	**ALIGNMENT** Existing -L- — **0 HR.** N/A
COLLAR ELEV. 2,669.1 ft	**TOTAL DEPTH** 50.2 ft	**NORTHING** N/A	**EASTING** N/A — **24 HR.** N/A
DRILL RIG/HAMMER EFF./DATE AFO0071 CME-550X 72% 09/03/2009		**DRILL METHOD** NW Casing w/ SPT	**HAMMER TYPE** Automatic
DRILLER Coffey, Jr., C.	**START DATE** 06/02/11	**COMP. DATE** 06/02/11	**SURFACE WATER DEPTH** N/A

ELEV (ft)	DRIVE ELEV (ft)	DEPTH (ft)	BLOW COUNT 0.5ft	0.5ft	0.5ft	BLOWS PER FOOT 0 25 50 75 100	SAMP. NO.	MOI	LOG	SOIL AND ROCK DESCRIPTION ELEV. (ft)	DEPTH (ft)
2670										2,669.1 GROUND SURFACE	0.0
										ALLUVIAL Dark brown silty fine to coarse SAND	
2665	2,664.1	5.0	WOH	1	2	3		W			
										2,662.6	6.5
2660	2,659.1	10.0	1	3	5	8		M		**ALLUVIAL** GRAVEL & COBBLES	
										2,660.3	8.8
2655	2,654.1	15.0	2	2	3	5		M		**SAPROLITE** Variegated silty fine to coarse SAND with seams of WEATHERED ROCK	
2650	2,649.1	20.0	9	57	15	72					
2645	2,644.1	25.0	3	5	6	11					
2640	2,639.1	30.0	9	27	15	42					
2635	2,634.1	35.0	3	5	8	13					
2630	2,629.1	40.0	8	15	22	37					
2625	2,624.1	45.0	14	22	21	43					
2620	2,619.1	50.0								2,619.2	49.9
	2,618.9	50.2	60/0.0			60/0.0				2,618.9 **CRYSTALLINE ROCK** GNEISS	50.2
			60/0.0							Boring Terminated with Casing Advancer Refusal at Elevation 2,618.9 ft In Crystalline Rock: (GNEISS)	

NCDOT BORE SINGLE B5114O_GEO_BH_BRDG0130.GPJ NC_DOT.GDT 3/6/12

45360.1.15 (BD-5114O)
TRANSYLVANIA COUNTY
BRIDGE # 130 ON SR 1147 OVER SOUTH FORK FLAT CREEK

CORE PHOTOS

EB1-A