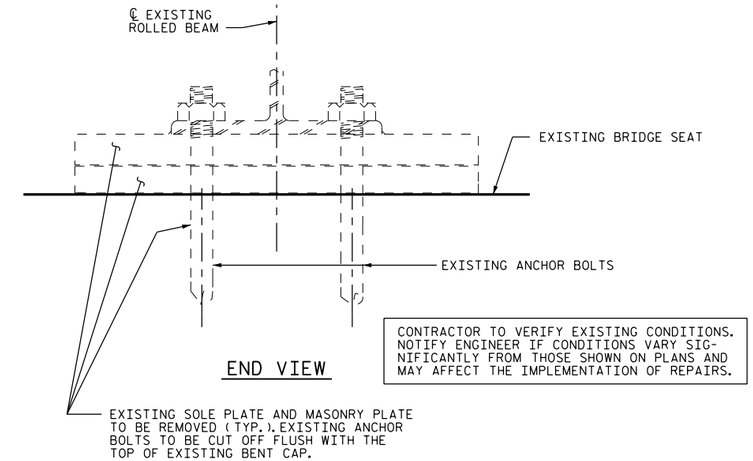

END VIEW

CONTRACTOR TO VERIFY EXISTING CONDITIONS. NOTIFY ENGINEER IF CONDITIONS VARY SIGNIFICANTLY FROM THOSE SHOWN ON PLANS AND MAY AFFECT THE IMPLEMENTATION OF REPAIRS.

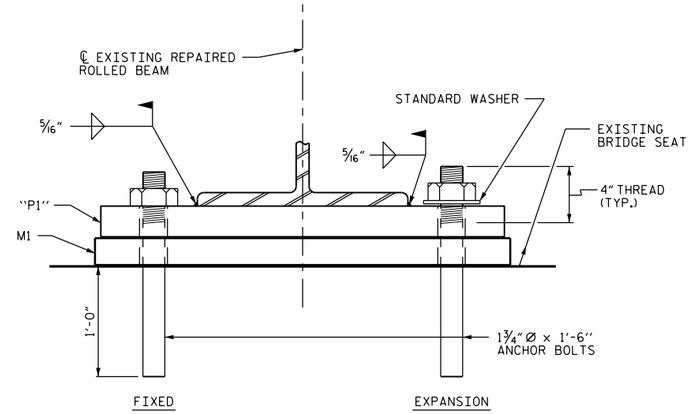

END VIEW
(8 ANCHOR BOLTS REQUIRED)

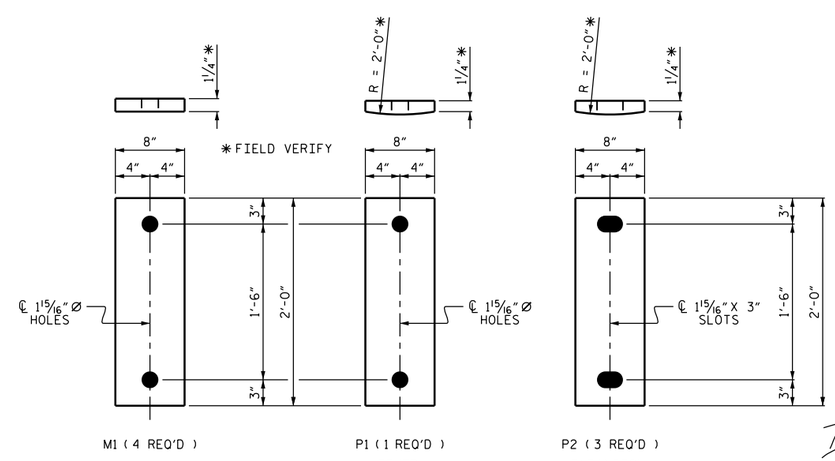

MASONRY PLATE

SOLE PLATE

BEARING REPAIR SEQUENCE

THE EXISTING BEARINGS DETERMINED FOR REPLACEMENT SHALL BE REMOVED AND REPLACED WITH BEARINGS AS SHOWN.

AT ALL POINTS OF SUPPORT, NUTS FOR ANCHOR BOLTS ARE TO BE TIGHTENED FINGER TIGHT AND THEN BACKED OFF ½TURN. THE THREAD OF THE NUT AND BOLT SHALL THEN BE BURRED WITH A SHARP POINTED TOOL.

SOLE PLATES, ANCHOR BOLTS, NUTS AND WASHERS SHALL BE GALVANIZED IN ACCORDANCE WITH THE STANDARD SPECIFICATIONS.

ANCHOR BOLTS SHALL MEET THE REQUIREMENTS OF ASTM A449. NUTS SHALL MEET THE REQUIREMENTS OF AASHTO M291-DH OR AASHTO M292-2H. WASHERS SHALL MEET THE REQUIREMENTS OF AASHTO M293. SHOP DRAWINGS ARE NOT REQUIRED FOR ANCHOR BOLTS, NUTS AND WASHERS. SHOP INSPECTION IS REQUIRED.

ALL WELDING SHALL BE IN ACCORDANCE WITH CURRENT APPLICABLE AWS AND NCDOT STANDARD SPECIFICATIONS.

ALL WELDS WILL BE INSPECTED AND TESTED BY THE NCDOT MATERIALS AND TEST UNIT IN ACCORDANCE WITH THE CURRENT AWS BRIDGE WELDING CODE AND STANDARD SPECIFICATIONS.

ALL SURFACES OF BEARING PLATES SHALL BE SMOOTH AND STRAIGHT.

THE CONTRACTOR SHALL CORE INTO EXISTING BENT CAP TO INSTALL 1¾"Ø ANCHOR BOLTS. BOLTS SHALL BE ADHESIVELY ANCHORED; SEE STANDARD SPECIFICATIONS. ADHESIVE FOR NEW ANCHOR BOLTS SHALL BE AN NCDOT-APPROVED PRODUCT. FIELD TESTING WILL NOT BE REQUIRED FOR INSTALLATION OF ADHESIVELY ANCHORED BOLTS.

ANTICIPATED BEARING REPLACEMENT LOCATIONS

SPAN	BEAM	LOCATION
A	4	BENT 1
B	4	BENT 1
B	1	BENT 2
B	2	BENT 2

PROJECT NO. BP-5500BB
HENDERSON COUNTY
BRIDGE NO. 30

NORTH CAROLINA PROFESSIONAL SEAL 035635 ENGINEER DAVID N. SNOAK
4/14/14

STATE OF NORTH CAROLINA
DEPARTMENT OF TRANSPORTATION
RALEIGH

BEARING REPAIR DETAILS

REVISIONS						SHEET NO.
NO.	BY:	DATE:	NO.	BY:	DATE:	S-10
1			3			TOTAL SHEETS
2			4			19

ASSEMBLED BY : P.C. BREWER DATE : 1/14
CHECKED BY : T.M SHERRILL DATE : 1/14

14-APR-2014 10:46
S:\PRS\POC\Squad C\Preservation_Projects\BP-5500\BB\Henderson_30\440030_SD_BeamRepair.dgn
pbrewer