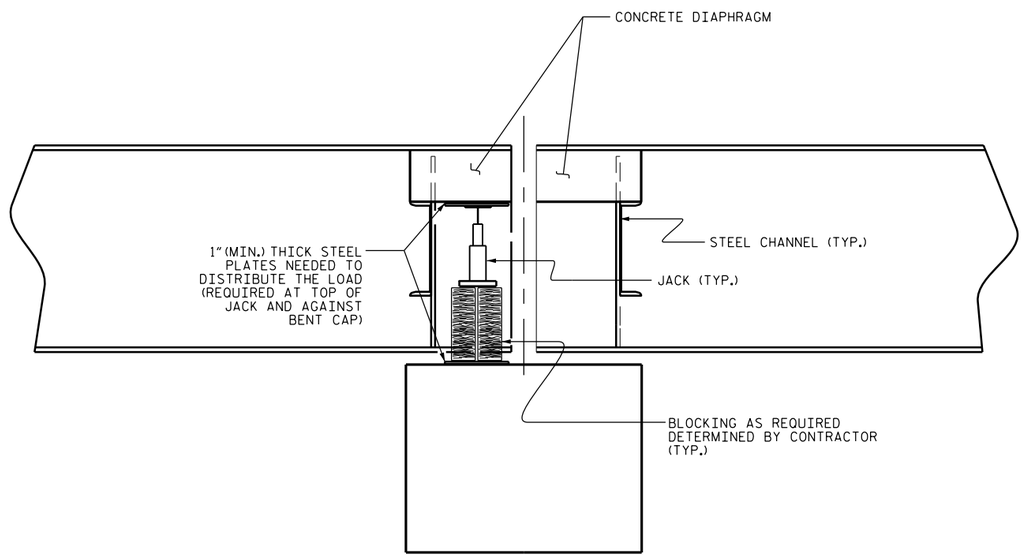

SECTION THRU DIAPHRAGM

JACKING NOTES:

THE CONTRACTOR SHALL SUBMIT JACKING PLANS AND CALCULATIONS FOR REVIEW AND APPROVAL PRIOR TO TO MATERIAL PURCHASE OR FABRICATION OF THE JACKING SYSTEM.

THE CONTRACTOR SHALL JACK ALL GIRDERS IN A SPAN ON AN INDIVIDUAL BENT SIMULTANEOUSLY BY MEANS OF A DUAL-FLOW PRESSURIZED PUMP CONTROLLING THE JACKS. ALTERNATIVELY, JACKING OF INDIVIDUAL GIRDERS MAY BE ALLOWED, PROVIDED THE ELEVATION DIFFERENCE FROM THE JACKED GIRDER TO ADJACENT GIRDER(S) DOES NOT EXCEED $^{1}/_{8}$".

THE SPAN SHALL BE LIFTED ENOUGH THAT THE BEAMS CLEAR THE BEARINGS AND ALL LOAD IS SUPPORTED BY THE JACKS. AFTER JACKING IS COMPLETE, THE CONTRACTOR SHALL PROVIDE A METHOD TO SUPPORT THE SPAN FOR DEAD AND LIVE LOADS AND REMOVE THE JACKS DURING BEAM REPAIR, OR IF JACKS REMAIN IN PLACE DURING THE ENTIRE JACKING AND REPAIR OPERATION, IT SHALL HAVE MECHANICAL LOCK OFF CAPABILITIES.

IF DURING THE JACKING PROCESS OR WHILE THE SPAN IS BEING SUPPORTED THE BEAMS SHIFT FROM THEIR ORIGINAL POSTION, ALL WORK WILL CEASE AND THE ENGINEER SHALL BE NOTIFIED IMMEDIATELY.

PRIOR TO JACKING, THE CONTRACTOR SHALL ENSURE THERE ARE NO OBSTACLES PREVENTING THE SPAN FROM BEING LIFTED.

ALL ADJACENT BEARINGS OF BEAMS NOT BEING JACKED MAY BE LOOSENED TO DECREASE THE RESISTANCE OF THE DECK SLAB DURING JACKING. ALL BEARINGS LOOSENED SHALL BE TIGHTENED BACK AFTER THE BEAMS ARE REPAIRED AND THE JACKS AND BLOCKING HAVE BEEN REMOVED.

PAYMENT OF JACKING WILL BE MADE AT THE LUMP SUM PRICE BID FOR "BRIDGE JACKING". SUCH LUMP SUM PRICE WILL BE FULL COMPENSATION FOR ALL MATERIALS, EQUIPMENT, TOOLS, LABOR, AND INCIDENTALS NECESSARY TO COMPLETE THE WORK.

PROJECT NO. BP-5500BB
HENDERSON COUNTY
BRIDGE NO. 30

NORTH CAROLINA PROFESSIONAL SEAL 035635 ENGINEER DAVID N. SNOKE
4/14/14

STATE OF NORTH CAROLINA
DEPARTMENT OF TRANSPORTATION
RALEIGH

BEAM END REPAIR AND BEARING REPLACEMENT

JACKING DETAILS

REVISIONS						SHEET NO.
NO.	BY:	DATE:	NO.	BY:	DATE:	S-11
1			3			TOTAL SHEETS
2			4			19

DRAWN BY : P.C. BREWER DATE : 1/14
CHECKED BY : T.M. SHERRILL DATE : 1/14

14-APR-2014 10:46
S:\PRS\POC\Squad C\Preservation_Projects\BP-5500\BB\Henderson_30\440030_SD_BeamRepair.dgn
pbrewer