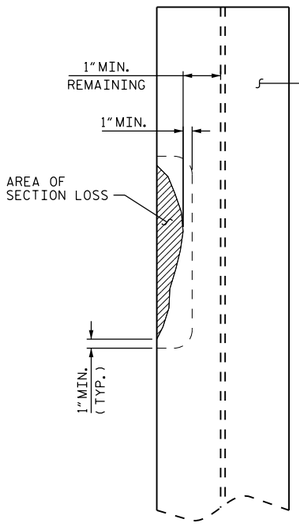

SECTION LOSS
PILE FLANGE REPAIR

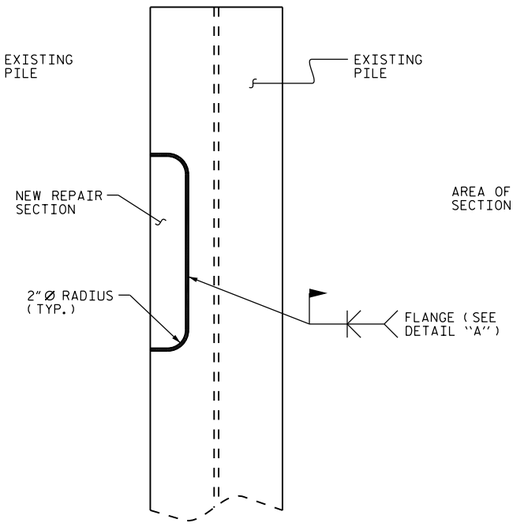

FLANGE REPAIR SECTION

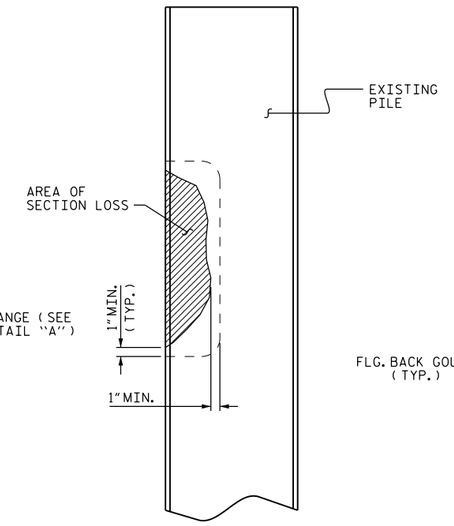

FLANGE/WEB REPAIR SECTION

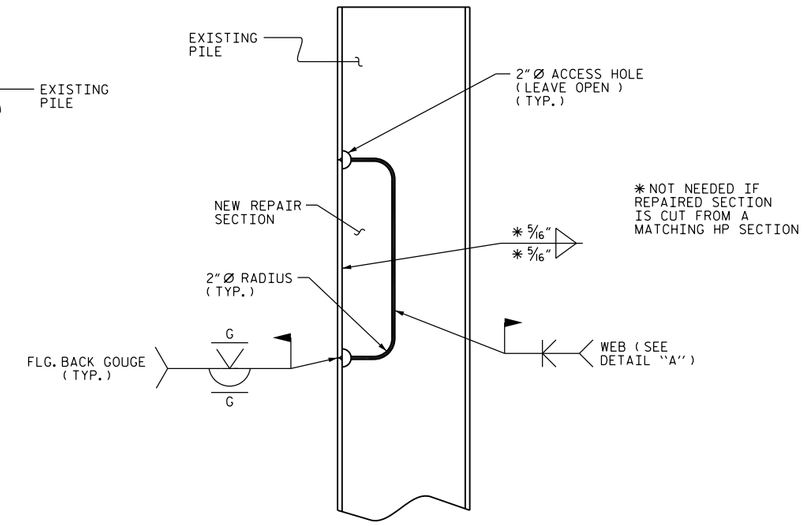

SECTION LOSS PILE
FLANGE/WEB REPAIR

PILE REPAIR NOTES:

AFTER THE STEEL PILE HAS BEEN BLASTED AND PRIMED, THE STEEL PILE SHALL BE INSPECTED FOR EXCESSIVE SECTION LOSS. AREAS THAT EXHIBIT AN EXCESS OF 35% LOCALIZED SECTION LOSS SHALL BE REVIEWED BY THE ENGINEER TO DETERMINE IF AREA OF SECTION LOSS SHOULD BE REPAIRED.

AS DETERMINED BY THE ENGINEER, AREAS WITH EXCESSIVE SECTION LOSS OR AREAS WITH TEMPORARY REPAIRS SHALL BE REMOVED AND THE PILES SHALL BE REPAIRED AS INDICATED ON THIS PLAN SHEET. CONTRACTOR AND ENGINEER TO DETERMINE ACTUAL DIMENSIONS OF AREA TO BE REMOVED AND REPLACED.

PAYMENT FOR THE SECTION REPAIR SHALL BE BASED ON THAT AMOUNT OF REPAIR ACTUALLY PERFORMED BY THE CONTRACTOR AND APPROVED BY THE ENGINEER.

GOUGES AND INDENTIONS FROM IMPACT ON THE PILES SHALL BE GROUND SMOOTH PRIOR TO BLASTING AND PAINTING OPERATION.

REPAIR SEQUENCE:

COMPLETELY REMOVE EXISTING PILE ENCASEMENT PRIOR TO PERFORMING ANY REPAIRS ON THAT PILE.

REMOVE LIVE LOAD FROM REPAIR AREA BY EITHER CLOSING BRIDGE TO TRAFFIC OR SHIFTING TRAFFIC AWAY FROM REPAIR AREA.

REMOVE DEAD LOAD FROM PILE BY JACKING AND BLOCKING.

MECHANICALLY CLEAN RUST, SCALE, AND EXISTING PAINT TO AT LEAST 1" BEYOND REPAIR AREA.

REPLACEMENT CUT-TO-FIT PILE SECTION SHALL BE NEW AND FROM SIMILAR SIZE HP SECTION OR APPROVED EQUIVALENT PLATES. THE GRADE OF STEEL SHALL BE AASHTO M270, GRADE 36 OR BETTER.

INSTALL THE CUT-TO-FIT SECTION, FULLY WELD ALONG TOP AND SIDES OF PLATE USING FULL PENETRATION WELDS.

ALL WELDING SHALL BE IN ACCORDANCE WITH CURRENT APPLICABLE AWS AND NCDOT STANDARD SPECIFICATIONS.

ALL WELDS WILL BE INSPECTED AND TESTED BY THE NCDOT MATERIALS AND TEST UNIT IN ACCORDANCE WITH THE CURRENT AWS BRIDGE WELDING CODE AND STANDARD SPECIFICATIONS.

IN ACCORDANCE WITH THE STANDARD SPECIFICATIONS, AFTER REPAIR, GRIND ALL WELDS FLUSH, THOROUGHLY CLEAN AREA TO REMOVE DEBRIS AND OILS FROM REPAIR PROCESS.

CLEANING AND PAINTING OF REPAIRED STEEL PILES SHALL BE PERFORMED AS PART OF THE OVERALL CLEANING AND PAINTING CONTRACT.

FOR CLEANING AND PAINTING, SEE PROJECT SPECIAL PROVISIONS.

LOWER SPAN TO BEAR; CHECK FOR DISTRESS.

REMOVE JACKING EQUIPMENT AND TEMPORARY SUPPORTS.

REMOVE ALL TRAFFIC CONTROL DEVICES.

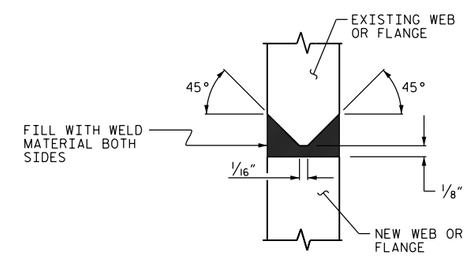

DETAIL "A"

PROJECT NO. BP-5500BB
HENDERSON COUNTY
BRIDGE NO. 30

NORTH CAROLINA PROFESSIONAL SEAL 035635 ENGINEER DAVID N. SNOKE
4/14/14

STATE OF NORTH CAROLINA
DEPARTMENT OF TRANSPORTATION
RALEIGH

PILE REPAIR

REVISIONS						SHEET NO.
NO.	BY:	DATE:	NO.	BY:	DATE:	S-15
1			3			TOTAL SHEETS
2			4			19

DRAWN BY : P.C. BREWER DATE : 3/14
CHECKED BY : T.M. SHERRILL DATE : 3/14
DESIGN ENGINEER OF RECORD: - DATE : -

14-APR-2014 10:50
S:\PRS\POC\Squad C\Preservation_Projects\BP-5500\BB\Henderson_30\440030_SD_PileRepair.dgn
pbrewer