IF THE EMBEDDED PORTION OF THE EXISITNG PLASTIC WATERSTOP IS EXPOSED DURING REMOVAL OF UNSOUND CONCRETE OR IF UNSOUND CONCRETE IS REMOVED TO WITHIN 2"OF THE WATERSTOP, THE ENTIRE WATERSTOP SHALL BE REMOVED.

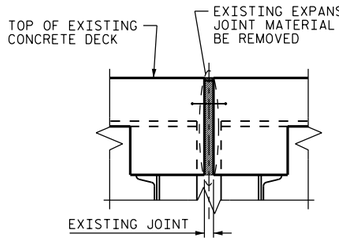

SECTION B-B
(EXISTING JOINT)

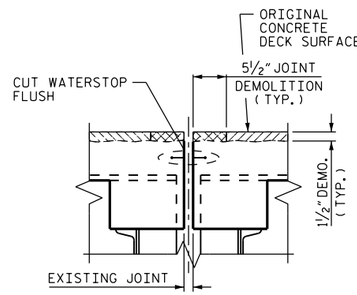

SECTION B-B
(MINIMUM EXISTING JOINT DEMOLITION)

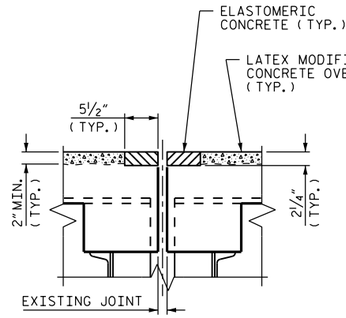

SECTION B-B
(PROPOSED JOINT PRE-SAWED DIMENSIONS)

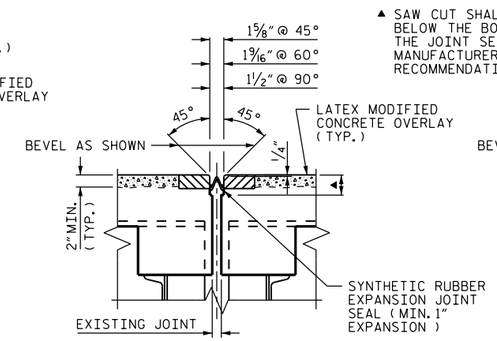

SECTION B-B
(BENT 1)
(PROPOSED SYNTHETIC RUBBER EXPANSION JOINT SEAL)

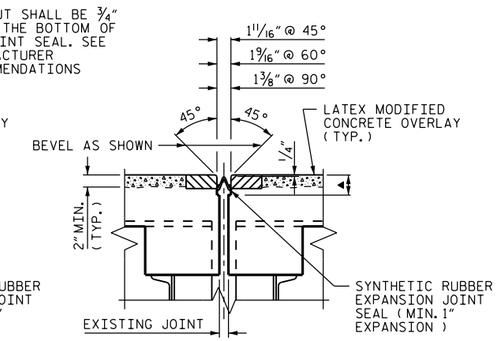

SECTION B-B
(BENT 2)
(PROPOSED SYNTHETIC RUBBER EXPANSION JOINT SEAL)

HYDRO-DEMOLITION OR EXCAVATION OF CONCRETE AT THE EXISTING JOINT SHALL RESULT IN THE BOTTOM OF THE EXCAVATION BEING REASONABLY FLAT, TO PROVIDE SUFFICIENT SUBSTRATE FOR PLACEMENT AND SUPPORT OF ELASTOMERIC CONCRETE.

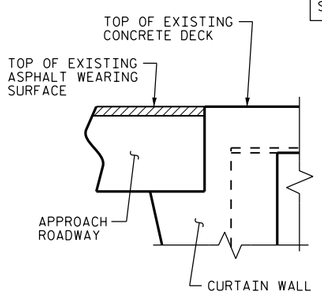

SECTION A-A
(EXISTING JOINT)

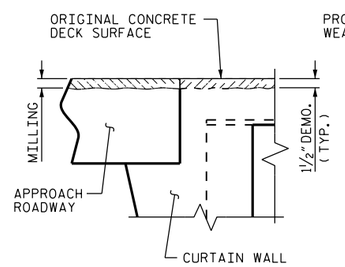

SECTION A-A
(MINIMUM EXISTING JOINT DEMOLITION)

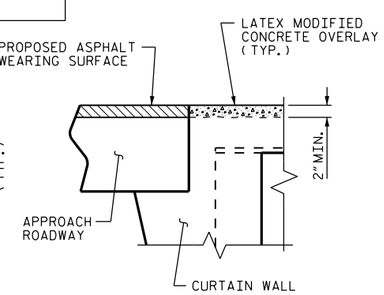

SECTION A-A
(PROPOSED COLD JOINT)

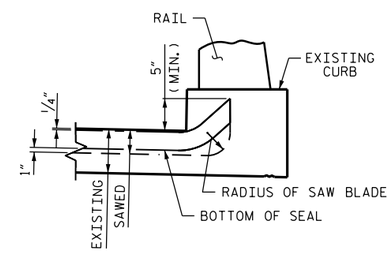

SECTION D-D

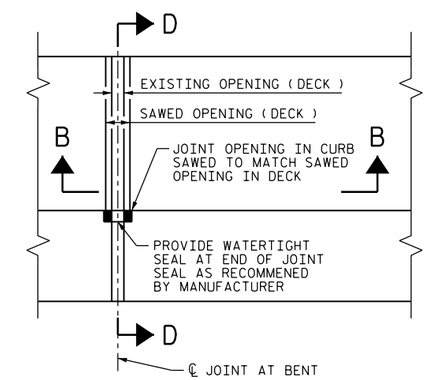

PLAN

JOINT SEAL DETAILS AT BENT

PROJECT NO. BP-5500BB
HENDERSON COUNTY
BRIDGE NO. 30

NOTES:

CONTRACTOR SHALL FIELD VERIFY THE EXISTING FORMED OPENING PRIOR TO OBTAINING JOINT MATERIAL.

SYNTHETIC RUBBER EXPANSION JOINT SEALS SHALL MEET THE MANUFACTURER'S RECOMMENDATION FOR THE SIZE OF OPENING ON THE PLANS, AND ACCOMMODATE THE MINIMUM EXPANSION SHOWN ON THE PLANS.

CONTRACTOR SHALL SUBMIT FOR APPROVAL THE PROPOSED SYNTHETIC RUBBER EXPANSION JOINT SEAL, WITH SUPPORTING INFORMATION AND DOCUMENTATION CONFIRMING THE APPROPRIATE SEAL SIZE.

NORTH CAROLINA PROFESSIONAL SEAL 035635 ENGINEER DAVID N. SNOKE
4/14/14

STATE OF NORTH CAROLINA
DEPARTMENT OF TRANSPORTATION
RALEIGH

JOINT DETAILS

REVISIONS						SHEET NO.
NO.	BY:	DATE:	NO.	BY:	DATE:	S-4
1			3			TOTAL SHEETS
2			4			19

DRAWN BY : P.C. BREWER DATE : 1/14
CHECKED BY : D.N. SNOKE DATE : 3/14
DESIGN ENGINEER OF RECORD: - DATE : -

18-JUL-2014 11:54
S:\PRS\PDC\Squad C\Preservation_Projects\BP-5500\BB\Henderson_30\440030_SD_LMC.dgn
malee7