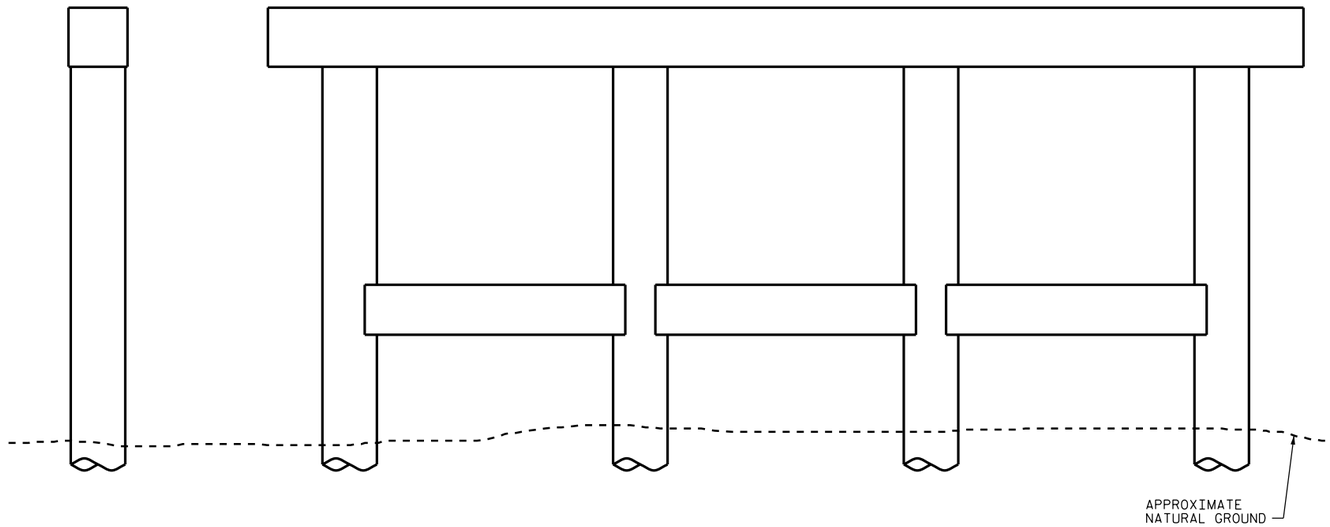

BENT 2 - EAST END

BENT 2 - SPAN "B" SIDE

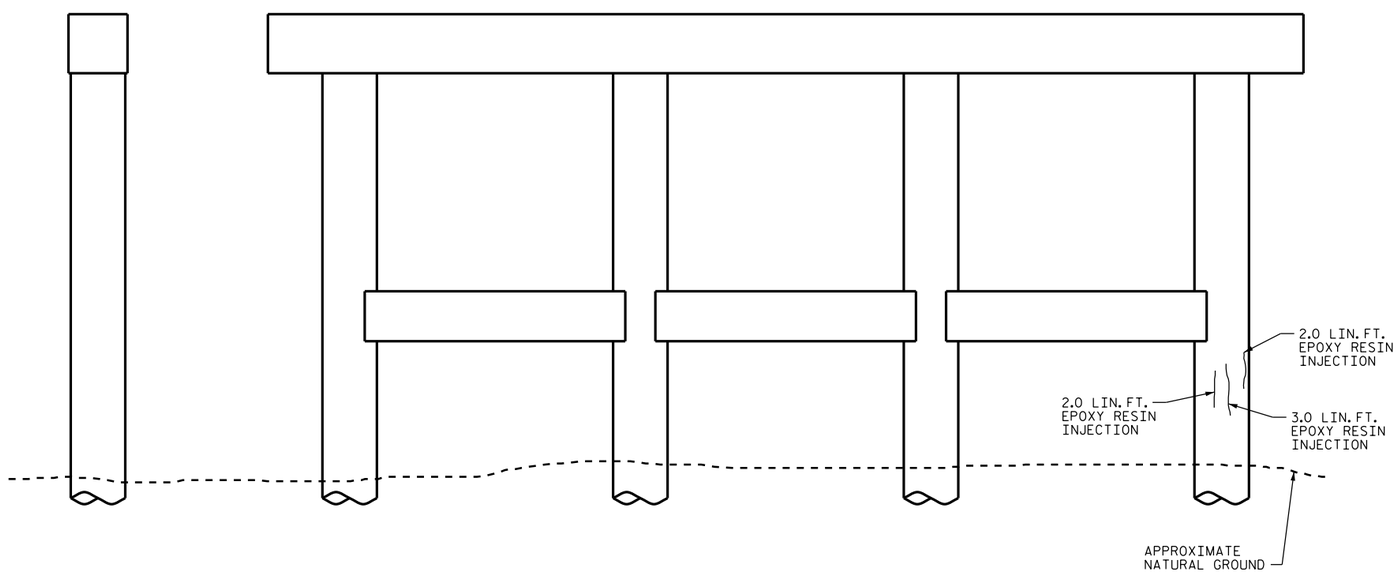

BENT 2 - WEST END

BENT 2 - SPAN "C" SIDE

REPAIR QUANTITY TABLE

REPAIRS BENT 2	QUANTITIES				
	ESTIMATE		ACTUAL		
SHOTCRETE REPAIRS	AREA SF	VOLUME CF	AREA SF	DEPTH FT	VOLUME CF
CAP (VERTICAL FACE)	0	0			
CAP (HORIZONTAL, CORNER)	0	0			
COLUMN	0	0			
EPOXY RESIN INJECTION		LN. FT			LN. FT
CAP		0			
COLUMN		7.0			

VALUES IN CHART REPRESENT ESTIMATED REPAIR TOTALS AFTER REMOVAL OF UNSOUND CONCRETE, MIN. OF 1" BEHIND REBAR AND MIN. 1" CL TO SAWCUT. SEE REPAIR DETAILS.

NOTES:

REPAIR LOCATIONS AND ESTIMATE OF QUANTITIES ARE GIVEN WITH THE BEST INFORMATION AVAILABLE. IF ADDITIONAL REPAIRS NOT SHOWN ON THE DRAWINGS ARE DEEMED NECESSARY BY THE INSPECTOR OR ENGINEER THE CONTRACTOR SHALL NOTE ON THE DRAWINGS THE APPROXIMATE LOCATION AND DESCRIPTION OF THE REPAIRS AND ADJUST THE ACTUAL QUANTITIES ENTERED INTO THE REPAIR QUANTITY TABLE.

FOR ADDITIONAL NOTES AND TYPICAL SUBSTRUCTURE REPAIR DETAIL, SEE "END BENT 1 & 2" SHEET.

PROJECT NO. BP-5500DD
SWAIN COUNTY
BRIDGE NO. 13

SHEET 3 OF 3

NORTH CAROLINA PROFESSIONAL SEAL 035635 ENGINEER DAVID N. SNOKE
4/21/14

STATE OF NORTH CAROLINA
DEPARTMENT OF TRANSPORTATION
RALEIGH

BENT 2

REVISIONS						SHEET NO.
NO.	BY:	DATE:	NO.	BY:	DATE:	S-12
1			3			TOTAL SHEETS
2			4			24

DRAWN BY : P.C. BREWER DATE : 7/13
CHECKED BY : D.N. SNOKE DATE : 4/14
DESIGN ENGINEER OF RECORD: - DATE : -

29-APR-2014 15:12
S:\PRS\POC\Squad C\Preservation_Projects\BP-5500\DD\SWAIN_13\860013_SD_BENT.dgn
pbrewer