T.I.P.: BP-5500DD

TIP NO.	SHEET NO.
BP-5500DD	PMP-1

APPROVED: RdW
DATE: 5/26/14

SEAL
NORTH CAROLINA PROFESSIONAL SEAL 022959 ENGINEER RONALD W. KING

STATE OF NORTH CAROLINA
DEPARTMENT OF TRANSPORTATION

PAVEMENT MARKING PLAN
SWAIN COUNTY

LOCATION: BRIDGES No.13 & 16 OVER ALARKA CREEK ON US 19/74

ROADWAY STANDARD DRAWING

THE FOLLOWING ROADWAY STANDARDS AS APPEAR IN "ROADWAY STANDARD DRAWINGS" - PROJECT SERVICES UNIT - N.C. DEPARTMENT OF TRANSPORTATION - RALEIGH, N.C., DATED JANUARY 2012 ARE APPLICABLE TO THIS PROJECT AND BY REFERENCE HEREBY ARE CONSIDERED A PART OF THESE PLANS:

STD. NO.	TITLE
1205.01	PAVEMENT MARKINGS - LINE TYPES AND OFFSETS
1205.02	PAVEMENT MARKINGS - TWO-LANE AND MULTILANE ROADWAYS
1205.03	PAVEMENT MARKINGS - EXIT AND ENTRANCE RAMPS
1205.08	PAVEMENT MARKINGS - SYMBOLS AND WORD MESSAGES
1205.10	PAVEMENT MARKINGS - SCHOOL AREAS
1205.12	PAVEMENT MARKINGS - BRIDGES
1250.01	RAISED PAVEMENT MARKERS - INSTALLATION SPACING
1251.01	RAISED PAVEMENT MARKERS - PERMANENT AND TEMPORARY
1253.01	RAISED PAVEMENT MARKERS - SNOWPLOWABLE

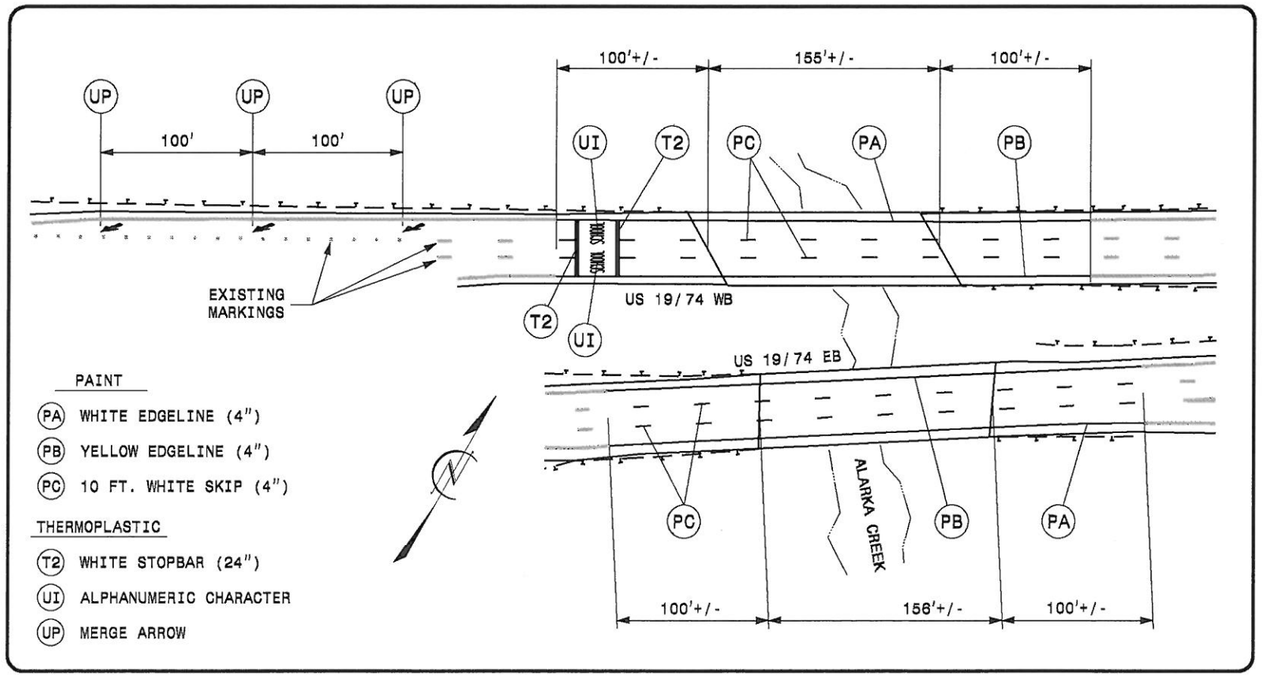

GENERAL NOTES

THE FOLLOWING GENERAL NOTES APPLY AT ALL TIMES FOR THE DURATION OF THE CONSTRUCTION PROJECT, EXCEPT WHEN OTHERWISE NOTED IN THE PLAN, OR DIRECTED BY THE ENGINEER.

A) INSTALL PAVEMENT MARKINGS AND PAVEMENT MARKERS ON THE FINAL SURFACE AS FOLLOWS:

ROAD NAME	MARKING	MARKER
US 19/74 & BRIDGE DECKS	PAINT	SNOWPLOWABLE

B) PLACE TWO APPLICATIONS OF PAINT PAVEMENT MARKINGS ON THE FINAL WEARING SURFACE. PLACE THE SECOND APPLICATION OF PAINT UPON SUFFICIENT DRYING TIME OF THE FIRST.

C) TIE PROPOSED PAVEMENT MARKING LINES TO EXISTING PAVEMENT MARKING LINES.

D) REMOVE/REPLACE ANY CONFLICTING/DAMAGED PAVEMENT MARKINGS AND MARKERS.

E) REMOVE ALL RESIDUE AND SURFACE LAITANCE BY ACCEPTABLE METHODS ON CONCRETE BRIDGE DECKS PRIOR TO PLACING PAINT PAVEMENT MARKING MATERIAL.

F) UNLESS OTHERWISE SPECIFIED, HEATED-IN-PLACE THERMOPLASTIC MAY BE USED IN LIEU OF EXTRUDED THERMOPLASTIC FOR STOP BARS, SYMBOLS, CHARACTERS AND DIAGONALS. IF HEATED-IN-PLACE IS USED, IT SHALL BE PAID FOR USING THE EXTRUDED THERMOPLASTIC PAY ITEM.

PAVEMENT MARKING SCHEDULE

SYMB	DESCRIPTION
	FINAL PAVEMENT MARKINGS
	THERMO (24", 120 MILS)
T2	WHITE STOPBAR
	PAINT (4")
PA	WHITE EDGELINE
PB	YELLOW EDGELINE
PC	10 FT. WHITE SKIP
	THERMO PAVEMENT MARKING CHARACTER (120 MILS)
UI	ALPHANUMERIC CHAR.
	THERMO PAVEMENT MARKING SYMBOLS (90 MILS)
UP	MERGE ARROW
	MARKERS
	SNOWPLOWABLE RAISED PAVEMENT MARKERS
MF	CRYSTAL & RED

INDEX

SHEET NO.	DESCRIPTION
PMP-1	PAVEMENT MARKING PLAN TITLE AND SCHEDULE SHEET & PAVEMENT MARKING DETAIL
PMP-2	REVISED PAVEMENT MARKING ROADWAY STANDARD DRAWING SHEET

PLAN PREPARED BY: N.C.D.O.T. SIGNING AND DELINEATION UNIT

KELVIN JORDAN — SIGNING & DELINEATION REGIONAL ENGINEER

DERRICK BEARD — SIGNING & DELINEATION PROJECT DESIGN ENGINEER

STATE OF NORTH CAROLINA DEPARTMENT OF TRANSPORTATION

21-MAY-2014 16:3
S:\SDU\TIPPROJECTS\BP-5500\Pavement Marking Seed.dgn
dlbeard AT TE2630B2