09/08/99

PROJECT: B-3458

CONTRACT: DN00174

See Sheet 1-A For Index of Sheets
See Sheet 1-B For Symbology

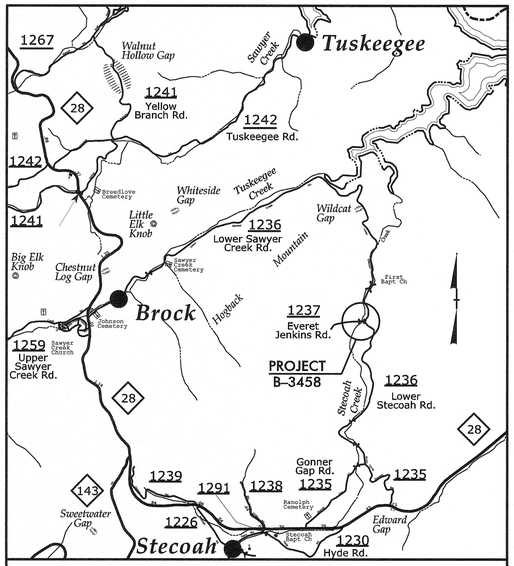

VICINITY MAP (N.T.S.)

STATE OF NORTH CAROLINA
DIVISION OF HIGHWAYS

GRAHAM COUNTY

STATE	STATE PROJECT REFERENCE NO.	SHEET NO.	TOTAL SHEETS
N.C.	B-3458	1	

STATE PROJ. NO.	F. A. PROJ. NO.	DESCRIPTION
33078.1.1		P.E.
33078.2.1		R/W & UTILITIES
33078.3.3		CONST.

LOCATION: BRIDGE #114 OVER STECOAH CREEK ON SR 1237 (EVERET JENKINS RD.)

TYPE OF WORK: GRADING, DRAINAGE, PAVING AND STRUCTURE

NAD 83

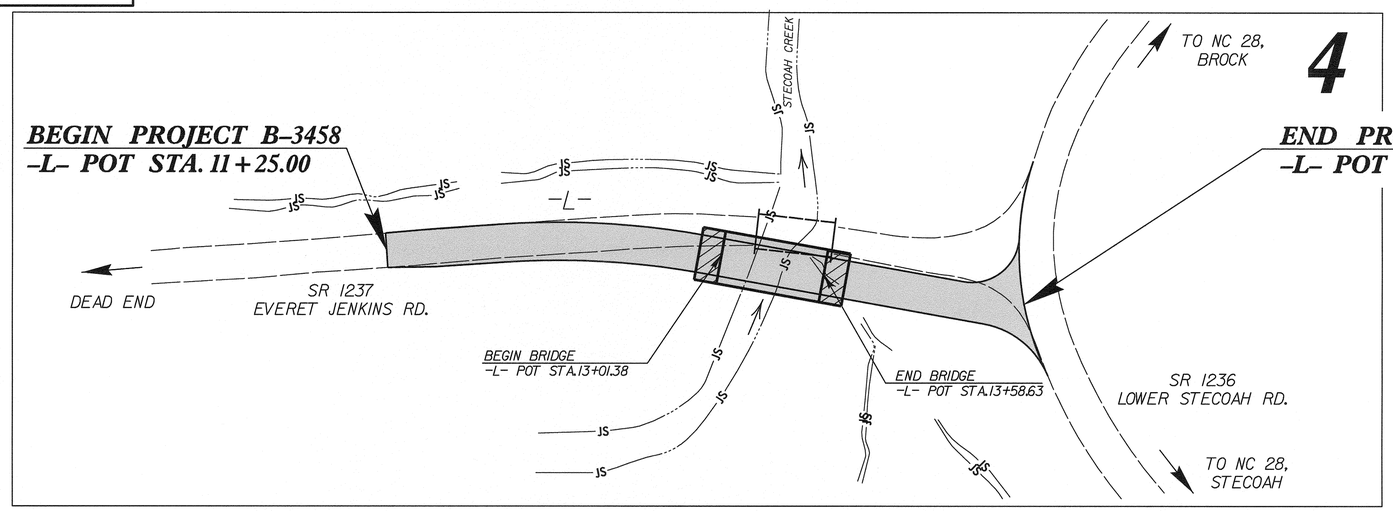

NCDOT CONTACT:

JOSH DEYTON, PE
DIVISION 14 BRIDGE PROGRAM MANAGER
(828) 488-0902

GRAPHIC SCALES

20 10 0 40 80
PLANS

20 10 0 40 80
PROFILE (HORIZONTAL)

4 2 0 8 16
PROFILE (VERTICAL)

DESIGN DATA

ADT 2000 = 40
V = 25 MPH

FUNCT. CLASSIFICATION:
RURAL LOCAL
SUB-REGIONAL TIER

PROJECT LENGTH

LENGTH ROADWAY PROJECT B-3458	=	0.054 mile
LENGTH STRUCTURES PROJECT B-3458	=	0.011 mile
TOTAL LENGTH PROJECT B-3458	=	0.065 mile

Prepared For:
DIVISION OF HIGHWAYS
1000 Birch Ridge Dr., Raleigh NC, 27610
By:
M A Engineering Consultants, Inc.
598 East Chatham Street - Suite 137
Cary, NC 27511
Phone: 919.297.0220 Fax: 919.297.0221
NC License: F-0160

2012 STANDARD SPECIFICATIONS

RIGHT OF WAY DATE:

LETTING DATE:

KEVIN S. HUTCHENS PE
PROJECT ENGINEER

ROBERT W. PORTER JR PE
PROJECT DESIGN ENGINEER

HYDRAULICS ENGINEER
NORTH CAROLINA PROFESSIONAL SEAL 21656 ENGINEER ROGER S. WEADON
7/23/14 P.E.
SIGNATURE:

ROADWAY DESIGN ENGINEER
NORTH CAROLINA PROFESSIONAL SEAL 039283 ENGINEER KEVIN S. HUTCHENS
7/23/14 P.E.
SIGNATURE:

STATE OF NORTH CAROLINA DEPARTMENT OF TRANSPORTATION

7/22/2014
R:\Roadway\Proj\B3458_Rdy_tsh.dgn
5:20:39 PM

PROJECT REFERENCE NO.	SHEET NO.
B-3458	1-A

ROADWAY DESIGN ENGINEER

NORTH CAROLINA PROFESSIONAL SEAL 039288 ENGINEER KEVIN S. HUTCHENS

7/23/14

M A Engineering Consultants, Inc.
598 East Chatham Street Suite 137 Cary, NC 27511
Phone: 919.297.0220 Fax: 919.297.0221

GENERAL NOTES:

2012 SPECIFICATIONS
EFFECTIVE: 01-17-12
REVISED: 07-30-12

GRADING AND SURFACING OR RESURFACING AND WIDENING:

THE GRADE LINES SHOWN DENOTE THE FINISHED ELEVATION OF THE PROPOSED SURFACING AT GRADE POINTS SHOWN ON THE TYPICAL SECTIONS. WHERE NO GRADE LINES ARE SHOWN, THE PROFILES SHOWN DENOTE THE TOP ELEVATION OF THE EXISTING PAVEMENT ALONG THE CENTER LINE OF SURVEY ON WHICH THE PROPOSED RESURFACING WILL BE PLACED. GRADE LINES MAY BE ADJUSTED BY THE ENGINEER IN ORDER TO SECURE A PROPER TIE-IN.

CLEARING:

CLEARING ON THIS PROJECT SHALL BE PERFORMED TO THE LIMITS ESTABLISHED BY METHOD II.

SUPERELEVATION:

ALL CURVES ON THIS PROJECT SHALL BE SUPERELEVATED IN ACCORDANCE WITH STD. NO. 225.04 USING THE RATE OF SUPERELEVATION AND RUNOFF SHOWN ON THE PLANS. SUPERELEVATION IS TO BE REVOLVED ABOUT THE GRADE POINTS SHOWN ON THE TYPICAL SECTIONS.

SHOULDER CONSTRUCTION:

ASPHALT, EARTH, AND CONCRETE SHOULDER CONSTRUCTION ON THE HIGH SIDE OF SUPERELEVATED CURVES SHALL BE IN ACCORDANCE WITH STD. NO. 560.01.

SIDE ROADS:

THE CONTRACTOR WILL BE REQUIRED TO DO ALL NECESSARY WORK TO PROVIDE SUITABLE CONNECTIONS WITH ALL ROADS, STREETS, AND DRIVES ENTERING THIS PROJECT. THIS WORK WILL BE PAID FOR AT THE CONTRACT UNIT PRICE FOR THE PARTICULAR ITEMS INVOLVED.

GUARDRAIL:

THE GUARDRAIL LOCATIONS SHOWN ON THE PLANS MAY BE ADJUSTED DURING CONSTRUCTION AS DIRECTED BY THE ENGINEER. THE CONTRACTOR SHOULD CONSULT WITH THE ENGINEER PRIOR TO ORDERING GUARDRAIL MATERIAL.

TEMPORARY SHORING:

SHORING REQUIRED FOR THE MAINTENANCE OF TRAFFIC NOT SHOWN ON THE PLANS WILL BE PAID FOR AT THE CONTRACT PRICE FOR "TEMPORARY SHORING".

SUBSURFACE PLANS:

SUBSURFACE PLANS ARE AVAILABLE ON THIS PROJECT.

END BENTS:

THE ENGINEER SHALL CHECK THE STRUCTURE END BENT PLANS, DETAILS, AND CROSS-SECTION PRIOR TO SETTING OF THE SLOPE STAKES FOR THE EMBANKMENT OR EXCAVATION APPROACHING A BRIDGE.

UTILITIES:

UTILITY OWNERS ON THIS PROJECT ARE: POWER - DUKE POWER
TELEPHONE - FRONTIER COMMUNICATIONS

ANY RELOCATION OF EXISTING UTILITIES WILL BE ACCOMPLISHED BY OTHERS.

RIGHT-OF-WAY MARKERS:

ALL RIGHT-OF-WAY MARKERS ON THIS PROJECT SHALL BE PLACED BY CONTRACT IN ACCORDANCE WITH SECTION 801 OF THE 2012 NORTH CAROLINA STANDARD SPECIFICATIONS FOR ROADS AND STRUCTURES.

2012 ROADWAY ENGLISH STANDARD DRAWINGS

The following Roadway Standards as appear in "Roadway Standard Drawings" Highway Design Branch - N. C. Department of Transportation - Raleigh, N. C., Dated January, 2012 are applicable to this project and by reference hereby are considered a part of these plans:

STD.NO.	TITLE
DIVISION 2 - EARTHWORK	
200.02	Method of Clearing - Method II
225.02	Guide for Grading Subgrade - Secondary and Local
225.04	Method of Obtaining Superelevation - Two Lane Pavement
DIVISION 3 - PIPE CULVERTS	
300.01	Method of Pipe Installation
310.10	Driveway Pipe Construction
DIVISION 4 - MAJOR STRUCTURES	
422.11	Reinforced Bridge Approach Fills - Sub Regional Tier
DIVISION 5 - SUBGRADE, BASES AND SHOULDERS	
560.01	Method of Shoulder Construction - High Side of Superelevated Curve - Method I
DIVISION 8 - INCIDENTALS	
840.00	Concrete Base Pad for Drainage Structures
840.18	Concrete Grated Drop Inlet Type 'B' - 12" thru 36" Pipe
840.24	Frames and Narrow Slot Sag Grates
840.25	Anchorage for Frames - Brick or Concrete or Precast
840.27	Brick Grated Drop Inlet Type 'B' - 12" thru 36" Pipe
840.45	Precast Drainage Structure
840.66	Drainage Structure Steps
846.01	Concrete Curb, Gutter and Curb & Gutter
862.01	Guardrail Placement
862.02	Guardrail Installation
876.02	Guide for Rip Rap at Pipe Outlets

INDEX OF SHEETS

SHEET NUMBER	SHEET
1	TITLE SHEET
1-A	INDEX OF SHEETS, GENERAL NOTES, AND LIST OF STANDARD DRAWINGS
1-B	CONVENTIONAL SYMBOLS
1-C	SURVEY CONTROL SHEET
2	PAVEMENT SCHEDULE, TYPICAL SECTIONS, AND WEDGING DETAILS
2-A	GUARDRAIL ANCHOR UNIT, TYPE III FOR ATTACHMENT TO RAIL ON BRIDGE - SUB REGIONAL TIER
2-B	MODFIFIED CONCRETE FLUME DETAIL
3-A	SUMMARIES OF EARTHWORK, PAVEMENT REMOVAL, DRAINAGE, AND GUARDRAIL
4	PLAN AND PROFILE SHEET
TMP-1 THRU TMP-4	TRANSPORTATION MANAGEMENT PLANS
PMP-1	PAVEMENT MARKING PLAN
EC-1 THRU EC-4	EROSION CONTROL PLANS
RF-1	REFORESTATION DETAIL
UO-1 THRU UO-2	UTILITIES BY OTHERS PLANS
X-1A	CROSS-SECTION SUMMARY
X-1 THRU X-3	CROSS-SECTIONS
S-1 THRU S-18	STRUCTURE PLANS

8/17/99
7/22/2014
5:13:29 PM
C:\pwworking\proj\B3458_rdy_psh_01A.dgn

12/05/11

PROJECT REFERENCE NO.	SHEET NO.
B-3458	1-B

Note: Not to Scale

****S.U.E. = Subsurface Utility Engineering***

STATE OF NORTH CAROLINA
DIVISION OF HIGHWAYS

CONVENTIONAL PLAN SHEET SYMBOLS

BOUNDARIES AND PROPERTY:

- State Line
- County Line
- Township Line
- City Line
- Reservation Line
- Property Line
- Existing Iron Pin — EIP
- Property Corner
- Property Monument — ECM
- Parcel/Sequence Number — 123
- Existing Fence Line
- Proposed Woven Wire Fence
- Proposed Chain Link Fence
- Proposed Barbed Wire Fence
- Existing Wetland Boundary — WLB
- Proposed Wetland Boundary — WLB
- Existing Endangered Animal Boundary — EAB
- Existing Endangered Plant Boundary — EPB
- Known Soil Contamination: Area or Site
- Potential Soil Contamination: Area or Site

BUILDINGS AND OTHER CULTURE:

- Gas Pump Vent or U/G Tank Cap
- Sign — S
- Well — W
- Small Mine
- Foundation
- Area Outline
- Cemetery
- Building
- School
- Church
- Dam

HYDROLOGY:

- Stream or Body of Water
- Hydro, Pool or Reservoir
- Jurisdictional Stream — JS
- Buffer Zone 1 — BZ 1
- Buffer Zone 2 — BZ 2
- Flow Arrow
- Disappearing Stream
- Spring
- Wetland
- Proposed Lateral, Tail, Head Ditch — FLOW
- False Sump

RAILROADS:

- Standard Gauge — CSX TRANSPORTATION
- RR Signal Milepost — MILEPOST 35
- Switch — SWITCH
- RR Abandoned
- RR Dismantled

RIGHT OF WAY:

- Baseline Control Point
- Existing Right of Way Marker
- Existing Right of Way Line
- Proposed Right of Way Line — RW
- Proposed Right of Way Line with Iron Pin and Cap Marker — RW
- Proposed Right of Way Line with Concrete or Granite R/W Marker — RW
- Proposed Control of Access Line with Concrete C/A Marker — C/A
- Existing Control of Access — C/A
- Proposed Control of Access — C/A
- Existing Easement Line — E
- Proposed Temporary Construction Easement — E
- Proposed Temporary Drainage Easement — TDE
- Proposed Permanent Drainage Easement — PDE
- Proposed Permanent Drainage / Utility Easement — DUE
- Proposed Permanent Utility Easement — PUE
- Proposed Temporary Utility Easement — TUE
- Proposed Aerial Utility Easement — AUE
- Proposed Permanent Easement with Iron Pin and Cap Marker

ROADS AND RELATED FEATURES:

- Existing Edge of Pavement
- Existing Curb
- Proposed Slope Stakes Cut — C
- Proposed Slope Stakes Fill — F
- Proposed Curb Ramp — CR
- Existing Metal Guardrail
- Proposed Guardrail
- Existing Cable Guiderail
- Proposed Cable Guiderail
- Equality Symbol
- Pavement Removal

VEGETATION:

- Single Tree
- Single Shrub
- Hedge
- Woods Line
- Orchard
- Vineyard — Vineyard

EXISTING STRUCTURES:

MAJOR:

- Bridge, Tunnel or Box Culvert — CONC
- Bridge Wing Wall, Head Wall and End Wall — CONC WW

MINOR:

- Head and End Wall — CONC HW
- Pipe Culvert
- Footbridge
- Drainage Box: Catch Basin, DI or JB — CB
- Paved Ditch Gutter
- Storm Sewer Manhole — S
- Storm Sewer — S

UTILITIES:

POWER:

- Existing Power Pole
- Proposed Power Pole
- Existing Joint Use Pole
- Proposed Joint Use Pole
- Power Manhole — P
- Power Line Tower
- Power Transformer
- U/G Power Cable Hand Hole
- H-Frame Pole
- Recorded U/G Power Line — P
- Designated U/G Power Line (S.U.E.*) — P

TELEPHONE:

- Existing Telephone Pole
- Proposed Telephone Pole
- Telephone Manhole — T
- Telephone Booth
- Telephone Pedestal — T
- Telephone Cell Tower
- U/G Telephone Cable Hand Hole — HH
- Recorded U/G Telephone Cable — T
- Designated U/G Telephone Cable (S.U.E.*) — T
- Recorded U/G Telephone Conduit — TC
- Designated U/G Telephone Conduit (S.U.E.*) — TC
- Recorded U/G Fiber Optics Cable — T FO
- Designated U/G Fiber Optics Cable (S.U.E.*) — T FO

WATER:

- Water Manhole — W
- Water Meter
- Water Valve
- Water Hydrant
- Recorded U/G Water Line — W
- Designated U/G Water Line (S.U.E.*) — W
- Above Ground Water Line — A/G Water

TV:

- TV Satellite Dish
- TV Pedestal — C
- TV Tower
- U/G TV Cable Hand Hole — HH
- Recorded U/G TV Cable — TV
- Designated U/G TV Cable (S.U.E.*) — TV
- Recorded U/G Fiber Optic Cable — TV FO
- Designated U/G Fiber Optic Cable (S.U.E.*) — TV FO

GAS:

- Gas Valve
- Gas Meter
- Recorded U/G Gas Line — G
- Designated U/G Gas Line (S.U.E.*) — G
- Above Ground Gas Line — A/G Gas

SANITARY SEWER:

- Sanitary Sewer Manhole
- Sanitary Sewer Cleanout
- U/G Sanitary Sewer Line — SS
- Above Ground Sanitary Sewer — A/G Sanitary Sewer
- Recorded SS Forced Main Line — FSS
- Designated SS Forced Main Line (S.U.E.*) — FSS

MISCELLANEOUS:

- Utility Pole
- Utility Pole with Base
- Utility Located Object
- Utility Traffic Signal Box — S
- Utility Unknown U/G Line — ?UTL
- U/G Tank; Water, Gas, Oil
- Underground Storage Tank, Approx. Loc. — UST
- A/G Tank; Water, Gas, Oil
- Geoenvironmental Boring
- U/G Test Hole (S.U.E.*)
- Abandoned According to Utility Records — AATUR
- End of Information — E.O.I.

PROJECT REFERENCE NO.	SHEET NO.
33078.1.1	1C
Location and Surveys	

SURVEY CONTROL SHEET B–3458
–FINAL–

BL

POINT	DESC.	NORTH	EAST	ELEVATION	L STATION	OFFSET
1	BL-1	631707.2370	606074.4020	1811.60	10+79.91	13.77 LT
2	BL-2	631675.3800	606434.8180	1813.39	14+41.22	6.54 LT

BY1

POINT	DESC.	NORTH	EAST	ELEVATION	Y STATION	OFFSET
3	BY1-3	631920.6130	606566.8000	1806.76	OUTSIDE PROJECT LIMITS	
22	BL-2	631675.3800	606434.8180	1813.39	11+42.47	30.03 RT
4	BY1-4	631527.1040	606540.6480	1822.87	OUTSIDE PROJECT LIMITS	

BM1 ELEVATION = 1814.43
N 631718 E 606017
L STATION 10+23.00 29 LEFT
8 INCH SPIKE SET IN 12" PALONIA TREE

BM2 ELEVATION = 1803.97
N 631649 E 606284
L STATION 12+97.00 46 RIGHT
1 INCH PIPE SET IN SIDE OF 30" MAPLE TREE

BM3 ELEVATION = 1827.85
N 631554 E 606573
Y STATION 12+63.00
S 71°10'13.08" E DIST 59.55
8 INCH SPIKE SET IN BASE OF 12" POPLAR TREE

-L- FINAL

TYPE	STATION	NORTH	EAST
POT	10+00.00	631688.0018	605995.6247
PC	11+86.09	631700.8140	606181.2691
PT	12+92.44	631695.0976	606287.2047
POT	14+76.39	631662.7597	606468.2828

-Y- FINAL

TYPE	STATION	NORTH	EAST
PC	10+00.00	631811.9433	606506.9436
PT	10+69.58	631751.3367	606473.4798
PC	10+80.03	631741.4556	606470.0894
PT	11+71.16	631652.1968	606471.8720
PC	11+82.79	631641.3545	606476.0832
PT	12+62.79	631572.7871	606516.6030

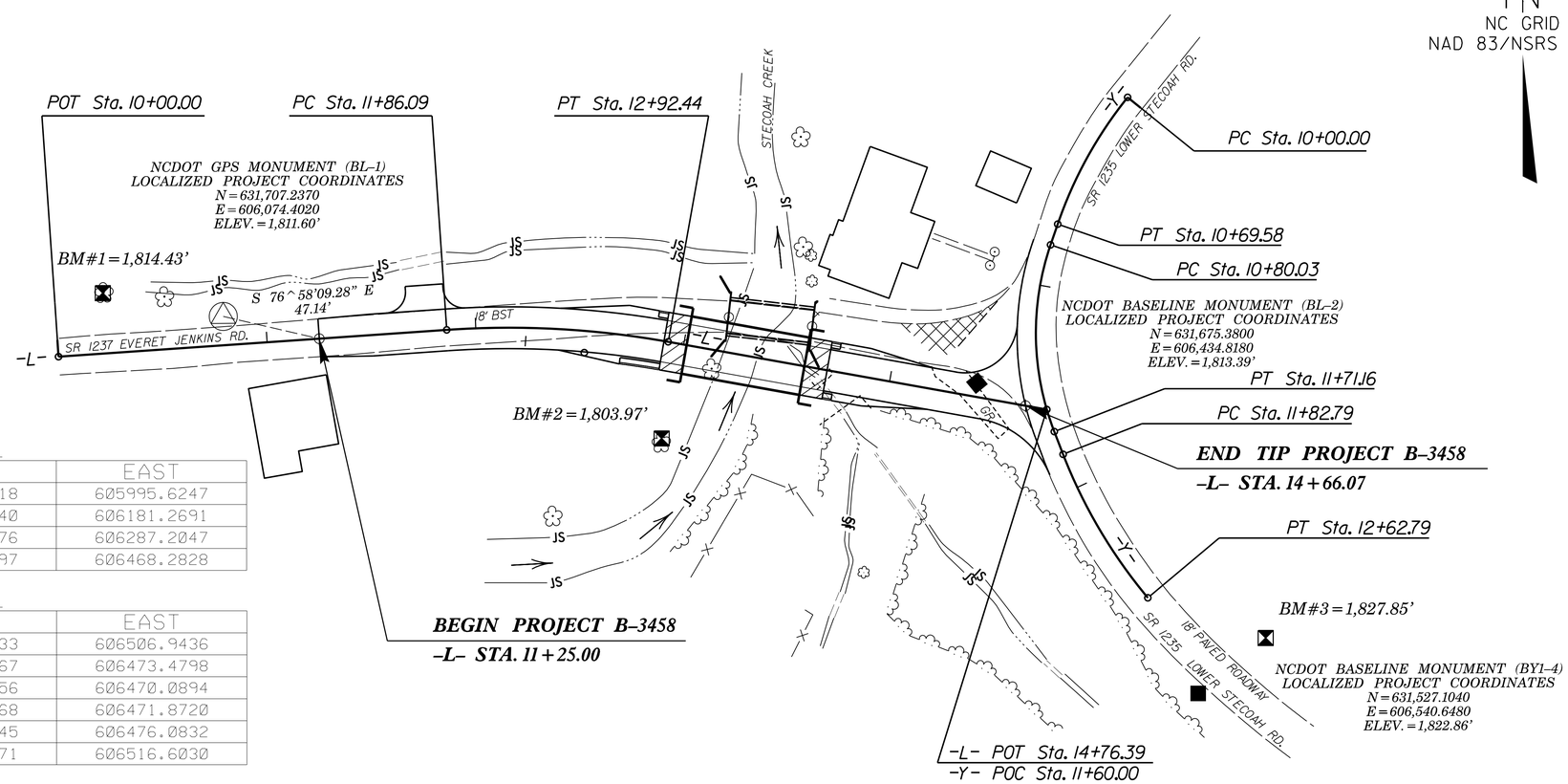

DATUM DESCRIPTION

THE LOCALIZED COORDINATE SYSTEM DEVELOPED FOR THIS PROJECT IS BASED ON THE STATE PLANE COORDINATES ESTABLISHED BY NCDOT FOR MONUMENT "B3458 (-BL-1)
WITH NAD 83/NSRS 2007 STATE PLANE GRID COORDINATES OF
NORTHING: 631707.2370(ft) EASTING: 606074.4020(ft)
ELEVATION: 1811.60(ft)
THE AVERAGE COMBINED GRID FACTOR USED ON THIS PROJECT (GROUND TO GRID) IS: 0.999793552
THE N.C. LAMBERT GRID BEARING AND LOCALIZED HORIZONTAL GROUND DISTANCE FROM "B3458 (GPS-BL-1) TO -L- STATION 11+25.00 IS
S 76°58'09.28" E 47.14'
ALL LINEAR DIMENSIONS ARE LOCALIZED HORIZONTAL DISTANCES
VERTICAL DATUM USED IS NAVD 88

NOTES:

1. THE CONTROL DATA FOR THIS PROJECT CAN BE FOUND ELECTRONICALLY BY SELECTING PROJECT CONTROL DATA AT:
HTTPS://CONNECT.NCDOT.GOV/RESOURCES/LOCATION/

THE FILES TO BE FOUND ARE AS FOLLOWS:
B3458_LS_CONTROL.TXT

SITE CALIBRATION INFORMATION HAS NOT BEEN PROVIDED FOR THIS PROJECT. IF FURTHER INFORMATION IS NEEDED, PLEASE CONTACT THE LOCATION AND SURVEYS UNIT.

△ INDICATES GEODETIC CONTROL MONUMENTS USED OR SET FOR HORIZONTAL PROJECT CONTROL BY THE NCDOT LOCATION AND SURVEYS UNIT.
PROJECT CONTROL ESTABLISHED USING GLOBAL POSITIONING SYSTEM.

NOTE: DRAWING NOT TO SCALE

6/2/99

PROJECT REFERENCE NO.	SHEET NO.
B-3458	2
ROADWAY DESIGN ENGINEER	PAVEMENT DESIGN ENGINEER
NORTH CAROLINA PROFESSIONAL SEAL 039283 ENGINEER KEVIN S. HUTCHENS 6/23/14	PAVEMENT DESIGN PROVIDED BY NCDOT

M A Engineering Consultants, Inc.
598 East Chatham Street Suite 137 Cary, NC 27511
Phone: 919.297.0220 Fax: 919.297.0221

PAVEMENT SCHEDULE

C1	PROP. APPROX. 2.5" ASPHALT CONCRETE SURFACE COURSE, TYPE SF9.5A, AT AN AVERAGE RATE OF 137.5 Lbs PER SQUARE YARD IN EACH OF TWO LAYERS.
C2	PROP. APPROX. 1.5" ASPHALT CONCRETE SURFACE COURSE, TYPE SF9.5A, AT AN AVERAGE RATE OF 165 Lbs PER SQUARE YARD.
E1	PROP. APPROX. 4.0" ASPHALT CONCRETE BASE COURSE, TYPE B25.0B, AT AN AVERAGE RATE OF 456 Lbs PER SQUARE YARD.
R1	SHOULDER BERM GUTTER
T	EARTH MATERIAL

PAVEMENT EDGE SLOPES AND TRENCH SLOPES ARE 1:1 UNLESS SHOWN OTHERWISE.

SHOULDER BERM GUTTER DETAIL

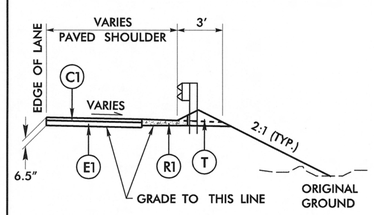

LINE	STATIONS
-L-	12+86.00 TO 12+90.38 RT
-L-	12+86.00 TO 12+90.38 LT
-L-	13+69.63 TO 13+74.00 RT
-L-	13+69.63 TO 13+74.00 LT

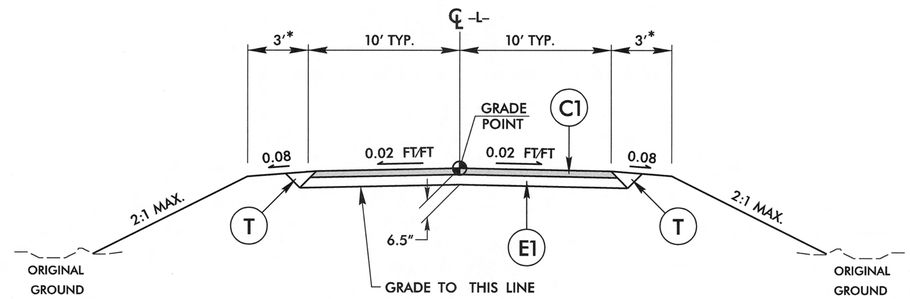

TYPICAL SECTION NO. 1

FROM -L- STA. 11+25.00 TO STA. 13+01.38 (BEGIN BRIDGE)
FROM -L- STA. 13+58.63 (END BRIDGE) TO STA. 14+66.07

NOTES

* 7' WITH GUARDRAIL (FACE GR MIN. 4' FROM EOP)

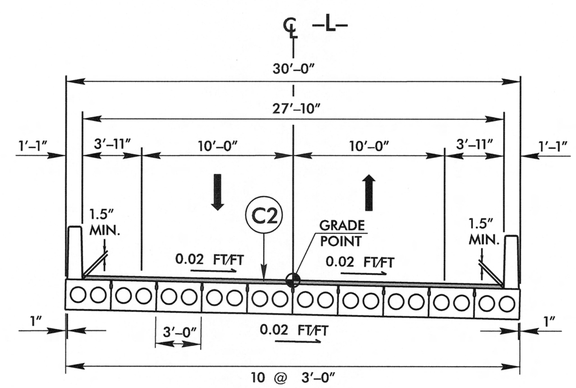

TYPICAL SECTION ON STRUCTURE

FROM -L- STA. 13+01.38 TO 13+58.63

6/20/2014
R:\Roadway\Proj\B3458_Rdy_typ.dgn
8:17:20 PM

$$$$$$$SYSTIME$$$$$
$$$$$$$$$$$$$$$$$DGN$$$$$$$$$$$$$$$$
$$$$USERNAME$$$$

STATE OF NORTH CAROLINA
DEPT. OF TRANSPORTATION
DIVISION OF HIGHWAYS
RALEIGH, N.C.

ENGLISH DETAIL DRAWING FOR
STRUCTURE ANCHOR UNITS
GUARDRAIL ANCHOR UNIT, TYPE III FOR ATTACHMENT TO
RAIL ON BRIDGE - SUB REGIONAL TIER

SHEET 2 OF 7
862d03

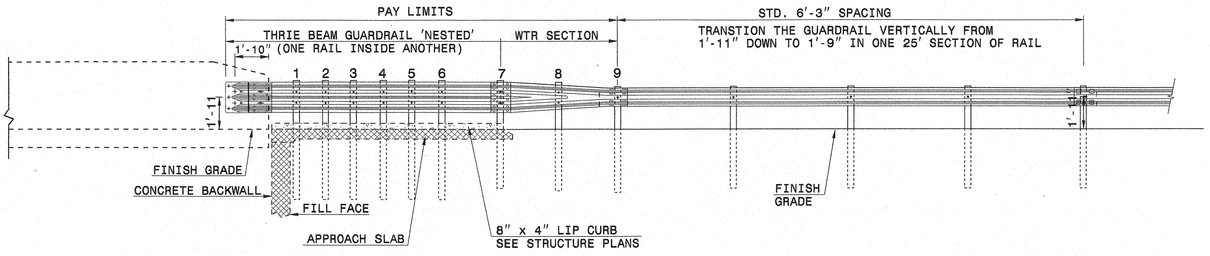

ELEVATION

NOTE:
- **POST NOT REQUIRED FOR SKEW ANGLES GREATER THAN 150° OR LESS THAN 30° UNLESS OTHERWISE DIRECTED BY THE ENGINEER.
- *THE DISTANCE FROM END OF BRIDGE RAIL TO CENTER LINE OF THE FIRST POST SHOULD BE 11½" IF CONCRETE BACKWALL IS NOT PRESENT.
- -SHOULDER BERM GUTTER MUST BE INSTALLED TO THE LIMITS 8" x 4" LIP CURB IS SHOWN IF ANCHOR UNIT IS NOT ADJACENT TO AN APPROACH SLAB.
- -MEASURE GUARDRAIL HEIGHT FROM THE TOP OF ADJACENT SURFACE (SHOULDER, BERM, OR GUTTER).
- -LAP JOINTS IN THE DIRECTION OF TRAFFIC FLOW.
- -SEE SHEET 5 FOR POST SECTIONS 1 THRU 9.

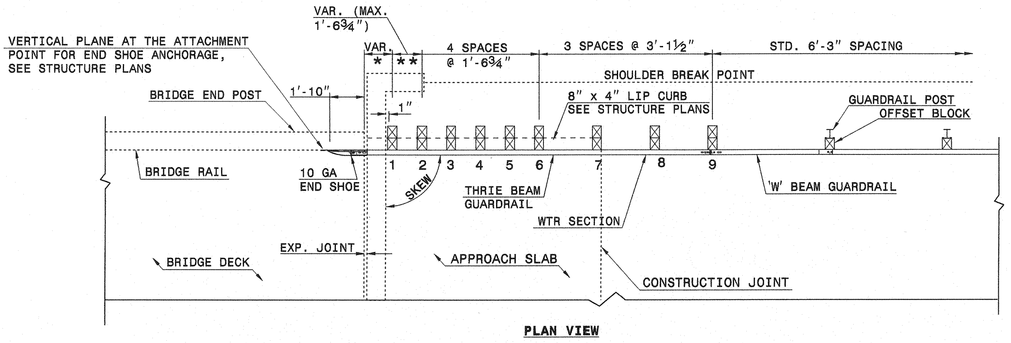

PLAN VIEW

GUARDRAIL ANCHOR UNIT, TYPE III FOR ATTACHMENT TO RAIL ON BRIDGE - SUB REGIONAL TIER

STATE OF NORTH CAROLINA
DEPT. OF TRANSPORTATION
DIVISION OF HIGHWAYS
RALEIGH, N.C.

ENGLISH DETAIL DRAWING FOR
STRUCTURE ANCHOR UNITS
GUARDRAIL ANCHOR UNIT, TYPE III FOR ATTACHMENT TO
RAIL ON BRIDGE - SUB REGIONAL TIER

SHEET 2 OF 7
862d03

STATE OF NORTH CAROLINA
DEPT. OF TRANSPORTATION
DIVISION OF HIGHWAYS
RALEIGH, N.C.

ENGLISH DETAIL DRAWING FOR
STRUCTURE ANCHOR UNITS
GUARDRAIL ANCHOR UNIT, TYPE III

SHEET 3 OF 7
862d03

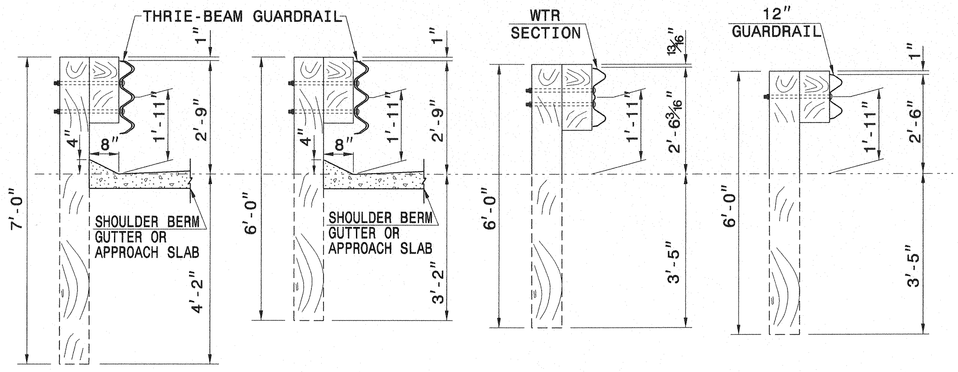

SECTION OF THRIE BEAM POSTS 1 THRU 6

SECTION OF THRIE BEAM POST 7

SECTION OF WTR BEAM POST 8

SECTION OF 'W' BEAM POST 9

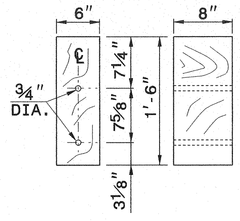

THRIE BEAM OFFSET BLOCK

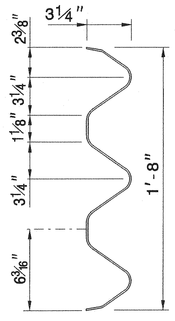

THRIE-BEAM SECTION

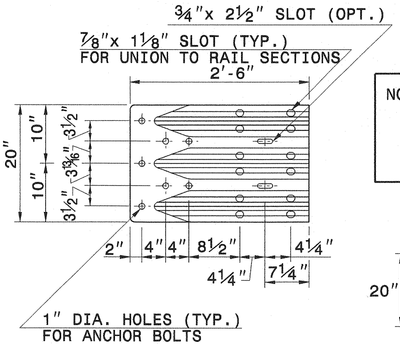

END SHOE

NOTE: THE MID POST AND OFFSET BLOCK OF THE WTR SECTION WILL REQUIRE SPECIAL BOLT HOLE DRILLING IN THE THRIE BEAM OFFSET BLOCK AND LINE POST.

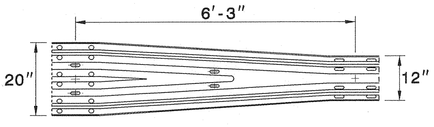

WTR SECTION
ELEVATION VIEW

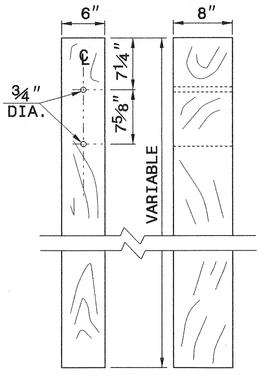

THRIE BEAM LINE POST

STATE OF NORTH CAROLINA
DEPT. OF TRANSPORTATION
DIVISION OF HIGHWAYS
RALEIGH, N.C.

ENGLISH DETAIL DRAWING FOR
STRUCTURE ANCHOR UNITS
GUARDRAIL ANCHOR UNIT, TYPE III

SHEET 3 OF 7
862d03

CONTRACT STANDARDS AND DEVELOPMENT UNIT
Office 919-707-6950 FAX 919-250-4119

SEE TITLE BLOCK

ORIGINAL BY: J HOWERTON DATE: 06-22-12
MODIFIED BY: DATE:
CHECKED BY: DATE:
FILE SPEC.:

NORTH CAROLINA PROFESSIONAL SEAL 022966 ENGINEER
4/28/14

PROJECT REFERENCE NO. B-3458
SHEET NO. 2-A

PROJECT REFERENCE NO.	SHEET NO.
B-3458	2-B

STATE OF
NORTH CAROLINA
DEPT. OF TRANSPORTATION
DIVISION OF HIGHWAYS
RALEIGH, N.C.

ENGLISH DETAIL DRAWING FOR
MODIFIED CONCRETE FLUME
WITH CONCRETE OR RIP-RAP DITCH

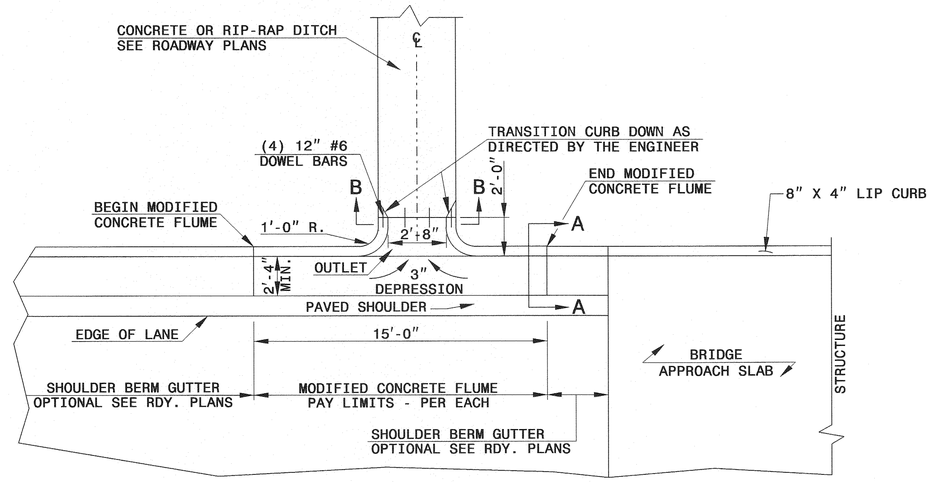

PLAN VIEW

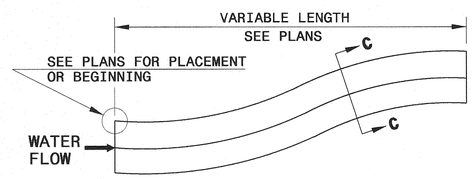

DOWNGRADE OR SAG

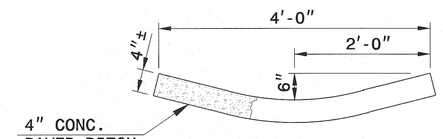

SECTION C-C

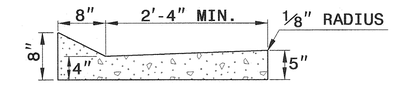

SECTION A-A

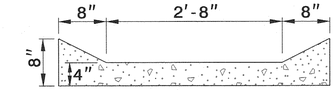

SECTION B-B

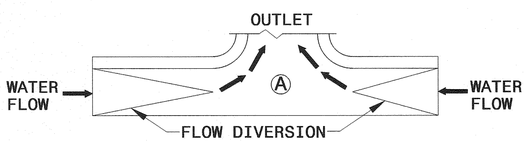

SAG

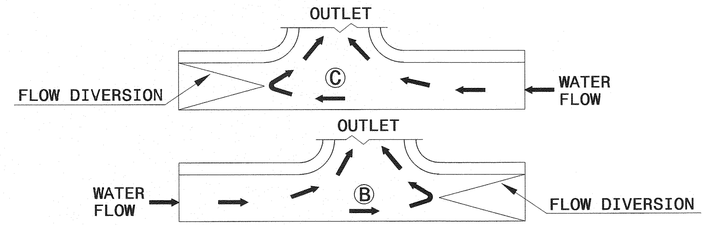

DOWN GRADE

FLOW DIVERSION EXAMPLES

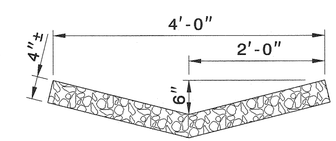

RIP-RAP LINED DITCH

NOTES:

- CONSTRUCT MODIFIED CONCRETE FLUME AND SHOULDER BERM GUTTER IN ACCORDANCE WITH THIS DETAIL.
- CONSTRUCT CONCRETE DITCH IN ACCORDANCE WITH STD. DWG. NO. 850.01.
- CONSTRUCT RIP RAP LINED DITCH IN ACCORDANCE WITH THIS DETAIL, IF CALLED FOR IN PLANS.
- CONCRETE OR RIP RAP LINED DITCH SHALL BE THE TYPE AND LENGTH SPECIFIED BY THE ROADWAY PLANS. THE DITCH SHALL TERMINATE AS SHOWN ON THE PLANS. IF NO TERMINATION IS INDICATED PLACE RIP-RAP AT THE END OF THE DITCH AS INDICATED BY STD. DWG. 876.02 FOR AN 18" PIPE. TRANSITIONS FROM THE DITCH TO TERMINATION SHALL BE AS DIRECTED BY THE ENGINEER.
- MODIFICATIONS SHALL BE AS DICTATED BY SITE CONDITIONS AND DIRECTED BY THE ENGINEER.

SHEET 1 OF 1
MODFLMDTCH

STATE OF
NORTH CAROLINA
DEPT. OF TRANSPORTATION
DIVISION OF HIGHWAYS
RALEIGH, N.C.

ENGLISH DETAIL DRAWING FOR
MODIFIED CONCRETE FLUME
WITH CONCRETE OR RIP-RAP DITCH

SHEET 1 OF 1
MODFLMDTCH

NORTH CAROLINA PROFESSIONAL SEAL 022966 ENGINEER
6/13/14

CONTRACT STANDARDS AND DEVELOPMENT UNIT
Office 919-707-6950 FAX 919-250-4119

SEE PLATE FOR TITLE

ORIGINAL BY: E.E. Ward DATE: Apr. 2002
MODIFIED BY: E.E. Ward DATE: July 2004
CHECKED BY: DATE:
FILE SPEC.:

COMPUTED BY: RWP	DATE: 04-16-2014
CHECKED BY: KSH	DATE: 06-05-2014

STATE OF NORTH CAROLINA
DIVISION OF HIGHWAYS

PROJECT REFERENCE NO.	SHEET NO.
B-3458	3-A

M A Engineering Consultants, Inc.
598 East Chatham Street Suite 137 Cary, NC 27511
Phone: 919.297.0220 Fax: 919.297.0221

SUMMARY OF EARTHWORK

IN CUBIC YARDS

LOCATION	UNCLASSIFIED EXCAVATION	UNDERCUT	EMBT+%	BORROW	WASTE
-L- 11+25.00 TO 13+01.38 (BEGIN BRIDGE)	52		64	12	0
-L- 13+58.63 (END BRIDGE) TO 14+66.07	51		463	412	0
TOTAL	103		527	424	0
LOSS DUE TO CLEARING AND GRUBBING	-50			50	
PROJECT TOTAL	53		527	474	0
ESTIMATED 5% TO REPLACE TOPSOIL ON BORROW PIT				24	
GRAND TOTAL	53		527	498	0
SAY	100			550	
ESTIMATED DRAINAGE DITCH EXCAVATION = 50 CY					
THE FOLLOWING CONTINGENCY ITEMS ARE TO BE USED AT THE DISCRETION OF THE ENGINEER:					
UNDERCUT = 50 CY					
SELECT GRANULAR MATERIAL = 50 CY					
GEOTEXTILE FOR SOIL STABILIZATION = 50 SY					

APPROXIMATE QUANTITIES ONLY. CLEARING AND GRUBBING, UNCLASSIFIED EXCAVATION, BORROW EXCAVATION, FINE GRADING, AND REMOVAL OF EXISTING PAVEMENT WILL BE PAID FOR AT THE CONTRACT LUMP SUM PRICE FOR "GRADING".

NOTE: Earthwork quantities are calculated by the Roadway Design Unit. These earthwork quantities are based in part on subsurface data provided by the Geotechnical Engineering Unit.

SUMMARY OF PAVEMENT REMOVAL

IN SQUARE YARDS

LOCATION	ASPHALT REMOVAL	ASPHALT BREAK-UP	CONCRETE REMOVAL	CONCRETE BREAK-UP
-L- STA. 11+25 TO 13+18 LT	380			
-L- STA. 13+59 TO 14+55 LT	259			
TOTAL	639			
SAY	640			

LIST OF PIPES, ENDWALLS, ETC. (FOR PIPES 48" & UNDER)

STATION	LOCATION (LT,RT, OR CL)	STRUCTURE NO. FROM	STRUCTURE NO. TO	TOP ELEVATION	INVERT ELEVATION	INVERT ELEVATION	SLOPE CRITICAL	DRAINAGE PIPE (RCP, CSP, CAAP, HDPE, or PVC) 12"	15"	18"	24"	30"	36"	42"	48"
-L- 12+80	RT	0401													
NOT USED		0402													
-L- 13+64	LT	0404		1806.8	1804.1										
		0404	0403		1804.1	1799.7			16						
-L- 14+17	RT	0405													
TOTAL									16						

STATION	C.S. PIPE (UNLESS NOTED OTHRWISE) 12" .064	15" .064	18" .064	24" .064	24"	30" .079	30"	36" .079	36"	42" .109	42"	48" .109	48"	CLASS III R.C. PIPE (UNLESS OTHERWISE NOTED) 12"	15"	18"	24"	30"	36"	42"	48"
-L- 12+80																					
NOT USED																					
-L- 13+64																					
-L- 14+17																					
TOTAL																					

STATION	15" SIDE DRAIN PIPE	18" SIDE DRAIN PIPE	24" SIDE DRAIN PIPE	ENDWALLS STD. 838.01, STD. 838.11 OR STD. 838.80 (UNLESS NOTED OTHERWISE) CU. YDS. R.C.P.	C.S.P.	QUANTITIES FOR DRAINAGE STRUCTURES PER EACH (0' THRU 5.0')	* TOTAL L.F. FOR PAY QUANTITY SHALL BE COL. 'A' + (1.3 X COL.'B') LIN. *FT. A 5.0' THRU 10.0'	B 10.0' AND ABOVE	C.B. STD. 840.01 OR STD. 840.02	FRAME, GRATES AND HOOD STANDARD 840.03 TYPE OF GRATE E	F	G	
-L- 12+80													
NOT USED													
-L- 13+64						1							
-L- 14+17			32										
TOTAL			32			1							

STATION	D.I. STD. 840.14 OR STD. 840.15	D.I. FRAME & GRATE STD. 840.16	G.D.I. TYPE "A" STD. 840.17 OR 840.26	G.D.I. TYPE "B" STD. 840.18 OR 840.27	G.D.I. TYPE "D" STD. 840.19 OR 840.28			G.D.I. (N.S.) FRAME WITH GRATE STD. 840.24	G.D.I. (N.S.) FRAME WITH TWO GRATES STD. 840.24	G.D.I. (N.S.) FRAME WITH TWO GRATES STD. 840.29	J.B. STD. 840.31 OR 840.32	T.B.D.I. STD. 840.35	MODIFIED CONCRETE FLUME (SEE DETAIL SHEET 2-B)					CORR. STEEL ELBOWS NO. & SIZE	CONC. COLLARS CL. "B" C.Y. STD 840.72	CONC. & BRICK PIPE PLUG, C.Y. STD. 840.71	PIPE REMOVAL LIN.FT.	REMARKS
-L- 12+80													1									
NOT USED																						
-L- 13+64				1					1												20	
-L- 14+17																					41	
TOTAL				1					1				1								61	

ABBREVIATIONS

C.B.	CATCH BASIN
N.D.I.	NARROW DROP INLET
D.I.	DROP INLET
G.D.I.	GRATED DROP INLET
G.D.I. (N.S.)	GRATED DROP INLET (NARROW SLOT)
J.B.	JUNCTION BOX
M.H.	MANHOLE
T.B.D.I.	TRAFFIC BEARING DROP INLET
T.B.J.B.	TRAFFIC BEARING JUNCTION BOX

GUARDRAIL SUMMARY

"N" = DISTANCE FROM EDGE OF LANE TO FACE OF GUARDRAIL.
TOTAL SHOULDER WIDTH = DISTANCE FROM EDGE OF TRAVEL LANE TO SHOULDER BREAK POINT.
FLARE LENGTH = DISTANCE FROM LAST SECTION OF PARALLEL GUARDRAIL TO END OF GUARDRAIL.

W = TOTAL WIDTH OF FLARE FROM BEGINNING OF TAPER TO END OF GUARDRAIL.
G = GATING IMPACT ATTENUATOR TYPE 350
NG = NON-GATING IMPACT ATTENUATOR TYPE 350

SURVEY LINE	BEG. STA.	END STA.	LOCATION	LENGTH STRAIGHT	SHOP CURVED	DOUBLE FACED	WARRANT POINT APPROACH END	TRAILING END	"N" DIST. FROM E.O.L.	TOTAL SHOUL. WIDTH	FLARE LENGTH APPROACH END	TRAILING END	W APPROACH END	TRAILING END	ANCHORS		GRAU 350 TL-2		TYPE III					IMPACT ATTENUATOR TYPE 350 EA	G	NG	SINGLE FACED GUARDRAIL	REMOVE EXISTING GUARDRAIL	REMOVE AND STOCKPILE EXISTING GUARDRAIL	REMARKS
-L-	12+47.78	13+01.38	LT	56.25				13+01.38	4'	7'		25'		1'			1		1											
-L-	12+44.70	13+01.38	RT	56.25'			13+01.38		4'	7'	25'		1'				1		1											
-L-	13+58.63	14+13.75	LT	56.25'			13+58.63		4'	7'	25'		1'				1		1											
-L-	13+58.63	14+13.75	RT	56.25'				13+58.63	4'	7'		25'		1'			1		1											
			TOTAL (LF):	225.00									TOTAL (EA)				4		4											
			TOTAL DEDUCTION FOR ANCHOR UNITS (LF):	175.00									DEDUCTION PER TYPE (LF)				25.00		18.75											
			TOTAL GUARDRAIL LENGTH (LF):	50.00									TOTAL DEDUCTION PER TYPE (LF)				100.00		75.00											
			SAY (LF):	50.00									TOTAL DEDUCTION (LF)					175.00												

4/04/06
6/20/2014
r:\roadway\proj\B3458_Rdy_psh_03a_sum.dgn
4:07:43 PM

PROJECT REFERENCE NO.	SHEET NO.
B-3458	4
R/W SHEET NO.	

ROADWAY DESIGN ENGINEER — NORTH CAROLINA PROFESSIONAL SEAL 039281 ENGINEER KEVIN S. HUTCHENS — 7/29/14

HYDRAULICS ENGINEER — NORTH CAROLINA PROFESSIONAL SEAL 21656 ENGINEER ROGER S. WEADON — 7/29/14

MA Engineering CONSULTANTS, INC.
598 East Chatham Street Suite 137 Cary, NC 27511
Phone: 919.297.0220 Fax: 919.297.0221

NAD 83/NSRS 2007

REVISIONS 8/17/99

-L-
PI Sta 12+39.53
Δ = 14° 04' 24.4" (RT)
D = 13° 13' 56.2"
L = 106.36'
T = 53.45'
R = 433.00'
SE = 0.03 FT/FT
RO = 42'

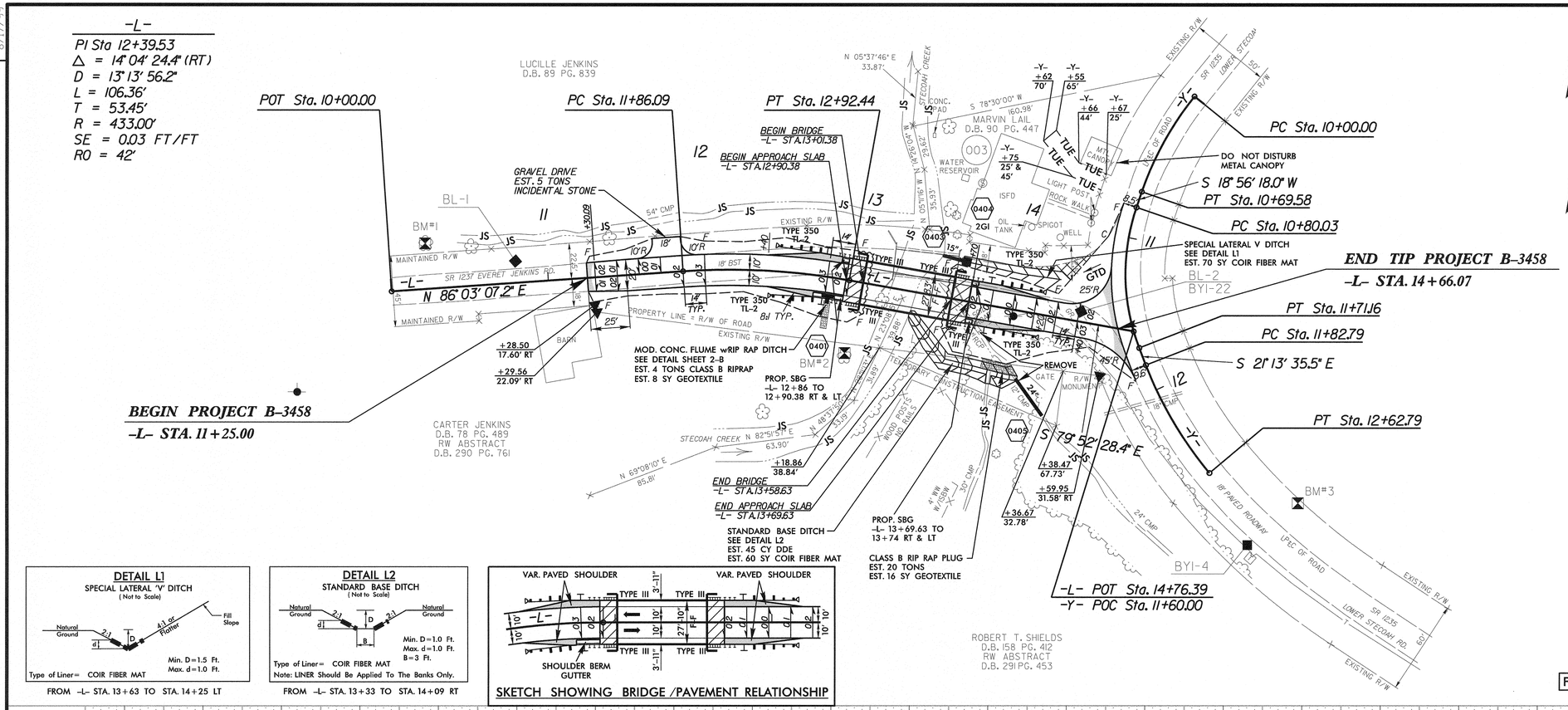

-Y-
PI Sta 11+27.56
Δ = 40° 09' 53.4" (LT)
D = 44° 04' 25.2"
L = 91.13'
T = 47.53'
R = 130.00'

PI Sta 10+35.15
Δ = 19° 56' 01.3" (LT)
D = 28° 38' 52.4"
L = 69.58'
T = 35.15'
R = 200.00'

PI Sta 12+23.15
Δ = 18° 42' 31.8" (LT)
D = 23° 23' 09.7"
L = 80.00'
T = 40.36'
R = 245.00'

PROP. STEEL SHEET PILING (SEE STRUCTURE PLANS)

FOR STRUCTURE PLANS, SEE SHEET S-1 THRU S-18

DETAIL L1
SPECIAL LATERAL 'V' DITCH
(Not to Scale)

Type of Liner= COIR FIBER MAT

FROM -L- STA. 13+63 TO STA. 14+25 LT

DETAIL L2
STANDARD BASE DITCH
(Not to Scale)

Type of Liner= COIR FIBER MAT
Note: LINER Should Be Applied To The Banks Only.

FROM -L- STA. 13+33 TO STA. 14+09 RT

SKETCH SHOWING BRIDGE /PAVEMENT RELATIONSHIP

BM#1
8" SPIKE SET IN 12" PALONIA TREE
-L- STA. 10+23.20
28.86' LT
ELEV=1814.43'

BM#2
1" PIPE SET IN SIDE OF 30" MAPLE TREE
-L- STA. 12+97.48
46.00' RT
ELEV=1803.97'

BM#3
8" SPIKE SET IN BASE OF 12" POPLAR TREE
55' BEYOND -Y- STA. 12+62.79
27.48' LT OF EXISTING CL
ELEV=1827.85'

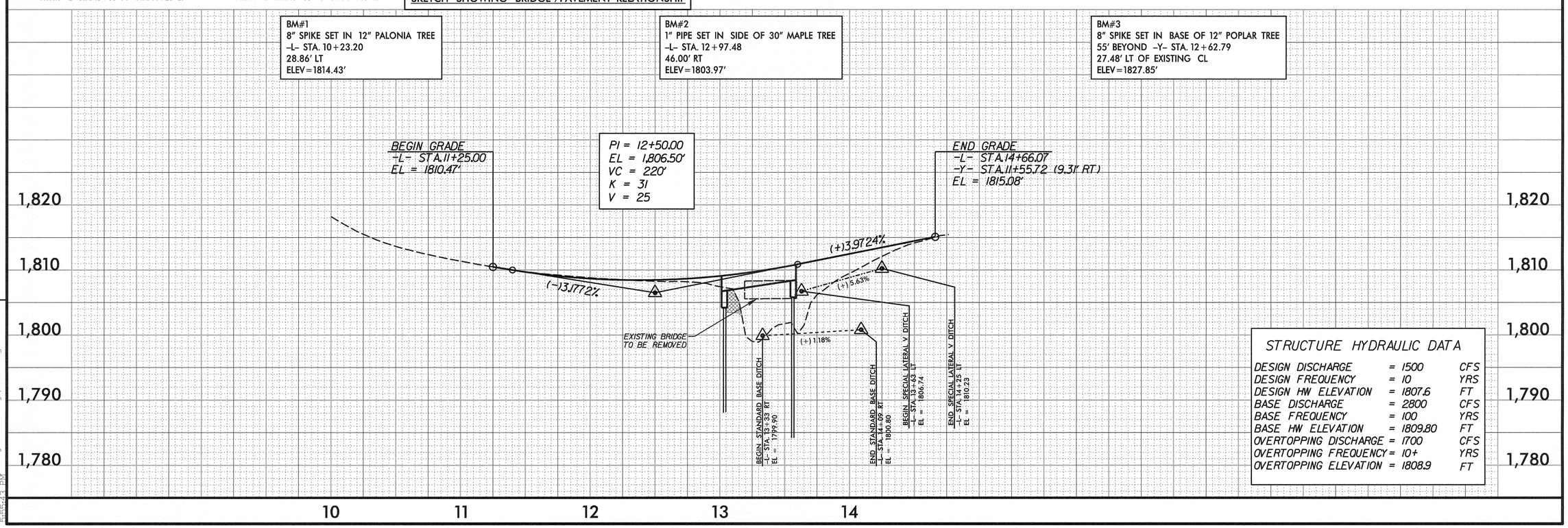

STRUCTURE HYDRAULIC DATA

DESIGN DISCHARGE	= 1500	CFS
DESIGN FREQUENCY	= 10	YRS
DESIGN HW ELEVATION	= 1807.6	FT
BASE DISCHARGE	= 2800	CFS
BASE FREQUENCY	= 100	YRS
BASE HW ELEVATION	= 1809.80	FT
OVERTOPPING DISCHARGE	= 1700	CFS
OVERTOPPING FREQUENCY	= 10+	YRS
OVERTOPPING ELEVATION	= 1808.9	FT

7/28/2014
R:\Roadway\Proj\B3458_Rdy_psh_04.dgn
8:56:43 PM

STATE OF NORTH CAROLINA
DIVISION OF HIGHWAYS

TRANSPORTATION MANAGEMENT PLAN

GRAHAM COUNTY

BRIDGE NO. 114 ON SR 1237 (EVERET JENKINS ROAD)

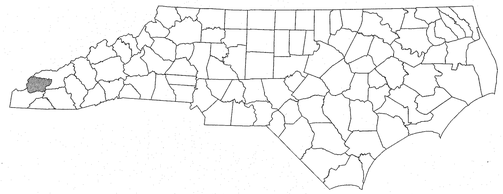

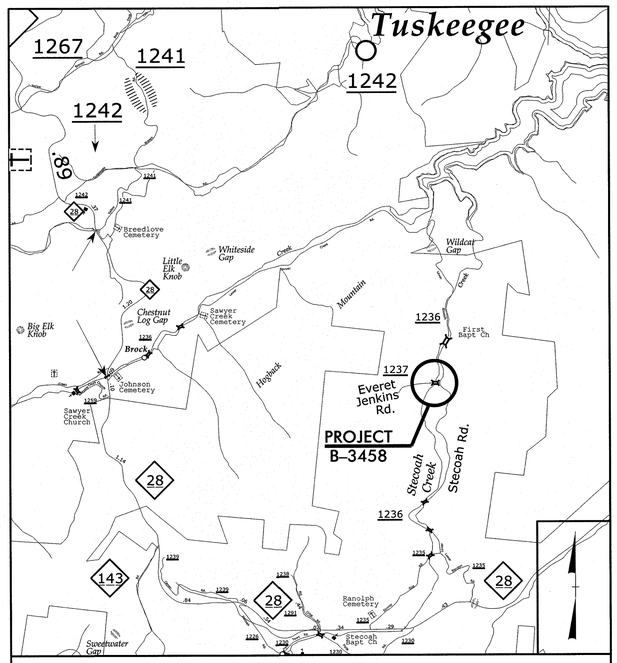

VICINITY MAP (N.T.S.)

INDEX OF SHEETS

SHEET NO.	TITLE
TMP-1	TITLE SHEET, VICINITY MAP AND INDEX OF SHEETS
TMP-1A	LIST OF APPLICABLE ROADWAY STANDARD DRAWINGS, AND LEGEND
TMP-1B	GENERAL NOTES AND LOCAL NOTES
TMP-1C	PHASING NOTES
TMP-2	PORTABLE CONCRETE BARRIER AT TEMPORARY SHORING LOCATIONS
TMP-3	TEMPORARY TRAFFIC CONTROL PHASE I DETAIL
TMP-4	TEMPORARY TRAFFIC CONTROL PHASE II DETAIL
PMP-1	PAVEMENT MARKING PLAN

SHEET NO.
TMP-1

B-3458

TIP PROJECT:

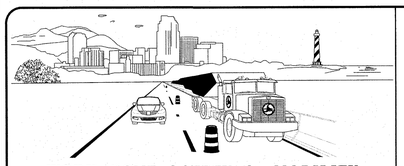

WORK ZONE SAFETY & MOBILITY
"from the MOUNTAINS to the COAST"

RAMEY KEMP & ASSOCIATES, INC.
Transportation Engineers
5808 Faringdon Place, Suite 100
Raleigh, North Carolina 27609
919-872-5115 Tel. 919-878-5416 Fax.
www.rameykemp.com
NC License No. C-0910

R. KYLE PHINNEY, P.E. TRAFFIC CONTROL PROJECT DESIGN ENGINEER

PROJECT ENGINEER

DIVISION OF HIGHWAYS
STATE OF NORTH CAROLINA
DEPARTMENT OF TRANSPORTATION
WORK ZONE TRAFFIC CONTROL

APPROVED:
DATE:

SEAL

NORTH CAROLINA PROFESSIONAL SEAL 040440 ENGINEER R. KYLE PHINNEY
07-24-2014

6/19/2014
...\TCP\B-3458_TC_TMP-1.dgn
User:rkphinney

PROJ. REFERENCE NO.	SHEET NO.
B-3458	TMP-1A

RAMEY KEMP & ASSOCIATES, INC.
Transportation Engineers
5808 Faringdon Place, Suite 100
Raleigh, North Carolina 27609
919-872-5115 Tel. 919-878-5416 Fax.
www.rameykemp.com
NC License No. C-0910

ROADWAY STANDARD DRAWINGS

THE FOLLOWING ROADWAY STANDARDS AS SHOWN IN "ROADWAY STANDARD DRAWINGS" - PROJECT SERVICES UNIT - N.C. DEPARTMENT OF TRANSPORTATION - RALEIGH, N.C., DATED JANUARY 2012 ARE APPLICABLE TO THIS PROJECT AND BY REFERENCE HEREBY ARE CONSIDERED A PART OF THESE PLANS:

STD. NO.	TITLE
1101.01	WORK ZONE WARNING SIGNS
1101.02	TEMPORARY LANE CLOSURES
1101.03	TEMPORARY ROAD CLOSURES
1101.04	TEMPORARY SHOULDER CLOSURES
1101.05	WORK ZONE VEHICLE ACCESSES
1101.06	WARNING SIGNS FOR BLASTING ZONES
1101.11	TRAFFIC CONTROL DESIGN TABLES
1110.01	STATIONARY WORK ZONE SIGNS
1110.02	PORTABLE WORK ZONE SIGNS
1115.01	FLASHING ARROW BOARDS
1130.01	DRUMS
1135.01	CONES
1145.01	BARRICADES
1150.01	FLAGGING DEVICES
1160.01	TEMPORARY CRASH CUSHION
1165.01	WORK VEHICLE LIGHTING SYSTEMS AND TMA DELINEATION
1170.01	PORTABLE CONCRETE BARRIER
1180.01	SKINNY - DRUM
1205.01	PAVEMENT MARKINGS - LINE TYPES AND OFFSETS
1205.02	PAVEMENT MARKINGS - TWO LANE AND MULTI-LANE ROADWAYS
1205.04	PAVEMENT MARKINGS - INTERSECTIONS
1205.12	PAVEMENT MARKING - BRIDGES
1262.01	GUARDRAIL END DELINEATION

LEGEND

GENERAL

- DIRECTION OF TRAFFIC FLOW
- DIRECTION OF PEDESTRIAN TRAFFIC FLOW
- EXIST. PVMT.
- NORTH ARROW
- PROPOSED PVMT.
- TEMP. SHORING (LOCATION PURPOSES ONLY)
- WORK AREA
- REMOVAL
- USER DEFINED (IF NEEDED)
- USER DEFINED (IF NEEDED)

SIGNALS

- EXISTING
- PROPOSED
- TEMPORARY

PAVEMENT MARKINGS

- EXISTING LINES
- TEMPORARY LINES

TRAFFIC CONTROL DEVICES

- BARRICADE (TYPE III)
- CONE
- DRUM
- SKINNY DRUM
- TUBULAR MARKER
- TEMPORARY CRASH CUSHION
- FLASHING ARROW BOARD
- FLAGGER
- LAW ENFORCEMENT
- TRUCK MOUNTED ATTENUATOR (TMA)
- CHANGEABLE MESSAGE SIGN

TEMPORARY SIGNING

- PORTABLE SIGN
- STATIONARY SIGN
- STATIONARY OR PORTABLE SIGN

PAVEMENT MARKERS

- CRYSTAL/CRYSTAL
- CRYSTAL/RED
- YELLOW/YELLOW

PAVEMENT MARKING SYMBOLS

- PAVEMENT MARKING SYMBOLS

TEMPORARY PAVEMENT MARKING

APPROVED: _____ DATE: _____

SEAL

NORTH CAROLINA PROFESSIONAL SEAL 040440 ENGINEER R. KYLE PHINNEY

07-24-2014

DIVISION OF HIGHWAYS · STATE OF NORTH CAROLINA · DEPARTMENT OF TRANSPORTATION · WORK ZONE TRAFFIC CONTROL

ROADWAY STANDARD DRAWINGS & LEGEND

6/20/2014
\\TCP\B-3458_TC_TMP-1A.dgn
User:kphinney

PROJ. REFERENCE NO.	SHEET NO.
B-3458	TMP-1B

RAMEY KEMP & ASSOCIATES, INC.
Transportation Engineers
5808 Faringdon Place, Suite 100
Raleigh, North Carolina 27609
919-872-5115 Tel. 919-878-5416 Fax.
www.rameykemp.com
NC License No. C-0910

GENERAL NOTES / LOCAL NOTES

CHANGES MAY BE REQUIRED WHEN PHYSICAL DIMENSIONS IN THE DETAIL DRAWINGS, STANDARD DETAILS, AND ROADWAY DETAILS ARE NOT ATTAINABLE TO MEET FIELD CONDITIONS OR RESULT IN DUPLICATE OR UNDESIRED OVERLAPPING OF DEVICES. MODIFICATION MAY INCLUDE: MOVING, SUPPLEMENTING, COVERING, OR REMOVAL OF DEVICES AS DIRECTED BY THE ENGINEER.

THE FOLLOWING GENERAL NOTES APPLY AT ALL TIMES FOR THE DURATION OF THE CONSTRUCTION PROJECT EXCEPT WHEN OTHERWISE NOTED IN THE PLAN OR DIRECTED BY THE ENGINEER.

LANE AND SHOULDER CLOSURE REQUIREMENTS

A) REMOVE LANE CLOSURE DEVICES FROM THE LANE WHEN WORK IS NOT BEING PERFORMED BEHIND THE LANE CLOSURE OR WHEN A LANE CLOSURE IS NO LONGER NEEDED OR AS DIRECTED BY THE ENGINEER.

B) WHEN PERSONNEL AND/OR EQUIPMENT ARE WORKING WITHIN 15 FT OF AN OPEN TRAVEL LANE, CLOSE THE NEAREST OPEN SHOULDER USING ROADWAY STANDARD DRAWING NO. 1101.04 UNLESS THE WORK AREA IS PROTECTED BY BARRIER OR GUARDRAIL OR A LANE CLOSURE IS INSTALLED.

C) WHEN PERSONNEL AND/OR EQUIPMENT ARE WORKING ON THE SHOULDER ADJACENT TO AN UNDIVIDED FACILITY AND WITHIN 5 FT OF AN OPEN TRAVEL LANE, CLOSE THE NEAREST OPEN TRAVEL LANE USING ROADWAY STANDARD DRAWING NO. 1101.02 UNLESS THE WORK AREA IS PROTECTED BY BARRIER OR GUARDRAIL.

WHEN PERSONNEL AND/OR EQUIPMENT ARE WORKING ON THE SHOULDER ADJACENT TO A DIVIDED FACILITY AND WITHIN 10 FT OF AN OPEN TRAVEL LANE, CLOSE THE NEAREST OPEN TRAVEL LANE USING ROADWAY STANDARD DRAWING NO. 1101.02 UNLESS THE WORK AREA IS PROTECTED BY BARRIER OR GUARDRAIL.

D) WHEN PERSONNEL AND/OR EQUIPMENT ARE WORKING WITHIN A LANE OF TRAVEL OF AN UNDIVIDED OR DIVIDED FACILITY, CLOSE THE LANE ACCORDING TO THE TRAFFIC CONTROL PLANS, ROADWAY STANDARD DRAWINGS, OR AS DIRECTED BY THE ENGINEER. CONDUCT THE WORK SO THAT ALL PERSONNEL AND/OR EQUIPMENT REMAIN WITHIN THE CLOSED TRAVEL LANE.

E) DO NOT WORK SIMULTANEOUSLY WITHIN 15 FT ON BOTH SIDES OF AN OPEN TRAVELWAY, RAMP, OR LOOP WITHIN THE SAME LOCATION UNLESS PROTECTED WITH GUARDRAIL OR BARRIER.

F) DO NOT INSTALL MORE THAN ONE LANE CLOSURE IN ANY ONE DIRECTION.

G) PROVIDE TRAFFIC CONTROL FOR APPROPRIATE LANE CLOSURES FOR SURVEYING DONE BY THE DEPARTMENT.

PAVEMENT EDGE DROP OFF REQUIREMENTS

H) BACKFILL AT A 6:1 SLOPE UP TO THE EDGE AND ELEVATION OF EXISTING PAVEMENT IN AREAS ADJACENT TO AN OPENED TRAVEL LANE THAT HAS AN EDGE OF PAVEMENT DROP-OFF AS FOLLOWS:

BACKFILL DROP-OFFS THAT EXCEED 2 INCHES ON ROADWAYS WITH POSTED SPEED LIMITS OF 45 MPH OR GREATER.

BACKFILL DROP-OFFS THAT EXCEED 3 INCHES ON ROADWAYS WITH POSTED SPEED LIMITS LESS THAN 45 MPH.

BACKFILL WITH SUITABLE COMPACTED MATERIAL, AS APPROVED BY THE ENGINEER, AT NO EXPENSE TO THE DEPARTMENT.

I) DO NOT EXCEED A DIFFERENCE OF 2 INCHES IN ELEVATION BETWEEN OPEN LANES OF TRAFFIC FOR NOMINAL LIFTS OF 1.5 INCHES. INSTALL ADVANCE WARNING "UNEVEN LANES" SIGNS (W8-11) 200 FT IN ADVANCE AND A MINIMUM OF EVERY HALF MILE THROUGHOUT THE UNEVEN AREA.

TRAFFIC PATTERN ALTERATIONS

J) NOTIFY THE ENGINEER TWENTY ONE (21) CALENDAR DAYS PRIOR TO ANY TRAFFIC PATTERN ALTERATION.

SIGNING

K) INSTALL ADVANCE WORK ZONE WARNING SIGNS WHEN WORK IS WITHIN 40 FT FROM THE EDGE OF TRAVEL LANE AND NO MORE THAN THREE (3) DAYS PRIOR TO THE BEGINNING OF CONSTRUCTION.

L) ENSURE ALL NECESSARY SIGNING IS IN PLACE PRIOR TO ALTERING ANY TRAFFIC PATTERN.

M) INSTALL BLACK ON ORANGE "DIP" SIGNS (W8-2) AND/OR "BUMP" SIGNS (W8-1) 200 FT IN ADVANCE OF THE UNEVEN AREA, OR AS DIRECTED BY THE ENGINEER.

TRAFFIC BARRIER

N) INSTALL TEMPORARY BARRIER ACCORDING TO THE TRANSPORTATION MANAGEMENT PLANS A MAXIMUM OF TWO (2) WEEKS PRIOR TO BEGINNING WORK IN ANY LOCATION. ONCE TEMPORARY BARRIER IS INSTALLED AT ANY LOCATION PROCEED IN A CONTINUOUS MANNER TO COMPLETE THE PROPOSED WORK IN THAT LOCATION UNLESS OTHERWISE STATED IN THE TRANSPORTATION MANAGEMENT PLANS OR AS DIRECTED BY THE ENGINEER.

ONCE TEMPORARY BARRIER IS INSTALLED AT ANY LOCATION AND NO WORK IS PERFORMED BEHIND THE TEMPORARY BARRIER FOR A PERIOD LONGER THAN TWO (2) MONTHS, REMOVE / RESET TEMPORARY BARRIER AT NO COST TO THE DEPARTMENT UNLESS OTHERWISE STATED IN THE TRANSPORTATION MANAGEMENT PLANS, TEMPORARY BARRIER IS PROTECTING A HAZARD, OR AS DIRECTED BY THE ENGINEER.

INSTALL TEMPORARY BARRIER WITH THE TRAFFIC FLOW BEGINNING WITH THE UPSTREAM SIDE OF TRAFFIC. REMOVE TEMPORARY BARRIER AGAINST THE TRAFFIC FLOW BEGINNING WITH THE DOWNSTREAM SIDE OF TRAFFIC.

INSTALL AND SPACE DRUMS NO GREATER THAN TWICE THE POSTED SPEED LIMIT (MPH) TO CLOSE OR KEEP THE SECTION OF THE ROADWAY CLOSED UNTIL THE TEMPORARY BARRIER CAN BE PLACED OR AFTER THE TEMPORARY BARRIER IS REMOVED.

O) PROTECT THE APPROACH END OF MOVABLE/PORTABLE CONCRETE BARRIER AT ALL TIMES DURING THE INSTALLATION AND REMOVAL OF THE BARRIER BY EITHER A TRUCK MOUNTED ATTENUATOR (MAXIMUM 72 HOURS) OR A TEMPORARY CRASH CUSHION.

PROTECT THE APPROACH END OF MOVABLE/PORTABLE CONCRETE BARRIER FROM ONCOMING TRAFFIC AT ALL TIMES BY A TEMPORARY CRASH CUSHION UNLESS THE APPROACH END OF MOVABLE/PORTABLE CONCRETE BARRIER IS OFFSET FROM ONCOMING TRAFFIC AS FOLLOWS OR AS SHOWN IN THE PLANS: (SEE ALSO 1101.05)

POSTED SPEED LIMIT	MINIMUM OFFSET
40 OR LESS	15 FT
45 - 50	20 FT
55	25 FT
60 MPH or HIGHER	30 FT

TRAFFIC CONTROL DEVICES

P) WHEN LANE CLOSURES ARE NOT IN EFFECT SPACE CHANNELIZING DEVICES IN WORK AREAS NO GREATER IN FEET THAN TWICE THE POSTED SPEED LIMIT (MPH) EXCEPT, 10 FT ON-CENTER IN RADII, AND 3 FT OFF THE EDGE OF AN OPEN TRAVELWAY. REFER TO STANDARD SPECIFICATIONS FOR ROADS AND STRUCTURES SECTIONS 1130 (DRUMS), 1135 (CONES) AND 1180 (SKINNY DRUMS) FOR ADDITIONAL REQUIREMENTS.

APPROVED:_____ DATE:_____

SEAL

NORTH CAROLINA PROFESSIONAL SEAL 040440 ENGINEER R. KYLE PHINNEY
07-24-2014

DIVISION OF HIGHWAYS · STATE OF NORTH CAROLINA · DEPARTMENT OF TRANSPORTATION · WORK ZONE TRAFFIC CONTROL

GENERAL NOTES / LOCAL NOTES

6/19/2014
...\TCP\B-3458_TC_TMP-1B.dgn
User:rkphinney

PROJ. REFERENCE NO.	SHEET NO.
17BP.14.R.17	TMP-1C

RAMEY KEMP & ASSOCIATES, INC.
Transportation Engineers
5808 Faringdon Place, Suite 100
Raleigh, North Carolina 27609
919-872-5115 Tel. 919-878-5416 Fax.
www.rameykemp.com
NC License No. C-0910

PHASING NOTES

PHASE I (SEE SHEET TMP-3)

STEP 1:
- CONTRACTOR SHALL PLACE ADVANCE WORK ZONE WARNING SIGNS PER RSD NO. 1101.01, SHEET 3 OF 3.
- CONTRACTOR SHALL SET UP PORTABLE TRAFFIC SIGNALS AND PORTABLE CONCRETE BARRICADES, AND BEGIN ONE-LANE, TWO-WAY TRAFFIC OPERATION UTILIZING THE EXISTING BRIDGE.
- TEMPORARY, PORTABLE TRAFFIC CONTROL SHALL REMAIN IN OPERATION WHEN CONTRACTOR IS NOT PRESENT ON SITE.

STEP 2:
- AWAY FROM TRAFFIC USING RSD NO. 1101.02, SHEET 1 OF 15 AND FLAGGERS AS NECESSARY, CONTRACTOR SHALL:
- INSTALL TEMPORARY SHORING.
- REMOVE EXISTING BRIDGE ABUTMENT WINGWALLS BEHIND TEMPORARY SHORING.
- CONSTRUCT FILL SLOPES ALONG NEW ALIGNMENT AND RELOCATE UTILITIES.
- CONSTRUCT NEW BRIDGE ABUTMENTS BEHIND TEMPORARY SHORING.
- INSTALL NEW BRIDGE DECK AND ROADWAY SURFACE SHOWN IN STAGE 1 OF CONSTRUCTION.
- CONSTRUCT ROADWAY ON NEW ALIGNMENT OF EVERET JENKINS RD. NOT OVERLAPPING WITH EXISTING ALIGNMENT.
- INSTALL PERMANENT GUARDRAIL AND IMPACT ATTENUATOR ON SOUTH SIDE OF EVERET JENKINS RD. AND INSTALL TEMPORARY BARRIERS AND IMPACT ATTENUATORS ON NEW BRIDGE.

PHASE II (SEE SHEET TMP-4)

STEP 1:
- UPON COMPLETION OF PHASE I, CONTRACTOR SHALL SET UP PORTABLE TRAFFIC SIGNALS AND PORTABLE CONCRETE BARRICADES IN NEW LOCATIONS, SHIFT TRAFFIC TO NEW ALIGNMENT, AND BEGIN ONE-LANE, TWO-WAY TRAFFIC OPERATION UTILIZING THE CONSTRUCTED FIRST STAGE OF THE NEW BRIDGE.
- TEMPORARY, PORTABLE TRAFFIC CONTROL SHALL REMAIN IN OPERATION WHEN CONTRACTOR IS NOT PRESENT ON SITE.

STEP 2:
- AWAY FROM TRAFFIC USING RSD NO. 1101.02, SHEET 1 OF 15 AND FLAGGERS AS NECESSARY, CONTRACTOR SHALL:
- REMOVE EXISTING BRIDGE, BRIDGE ABUTMENTS, AND ROADWAY FROM EXISTING BRIDGE APPROACH ALIGNMENTS.
- REMOVE TEMPORARY SHORING AND CONSTRUCT REMAINDER OF NEW BRIDGE ABUTMENTS.
- INSTALL REMAINDER OF NEW BRIDGE DECK AND ROADWAY SURFACE SHOWN IN STAGE 2 OF CONSTRUCTION AND REMAINDER OF ROADWAY ON NEW BRIDGE APPROACH ALIGNMENTS.
- INSTALL GUARDRAIL AND IMPACT ATTENUATOR ON NORTH SIDE OF EVERET JENKINS RD.

STEP 3:
- UPON COMPLETION, REMOVE TEMPORARY BARRIERS, PORTABLE SIGNALS, CONSTRUCTION SIGNS, AND BARRICADES AND OPEN ROAD TO TWO-LANE, TWO-WAY TRAFFIC.
- NOTE: FLAGGERS MAY BE USED DURING DAYTIME CONSTRUCTION ACTIVITIES. TEMPORARY,PORTABLE TRAFFIC CONTROL SHALL REMAIN IN OPERATION WHEN CONTRACTOR IS NOT PRESENT ON SITE.

APPROVED:_____ DATE:_____

SEAL

NORTH CAROLINA PROFESSIONAL SEAL 040440 ENGINEER R. KYLE PHINNEY
07-24-2014

DIVISION OF HIGHWAYS · STATE OF NORTH CAROLINA · DEPARTMENT OF TRANSPORTATION · WORK ZONE TRAFFIC CONTROL

PHASING NOTES

6/19/2014
...\TCP\B-3458_TC_TMP_IC.dgn
User:kphinney

PROJ. REFERENCE NO.	SHEET NO.
B-3458	TMP-2

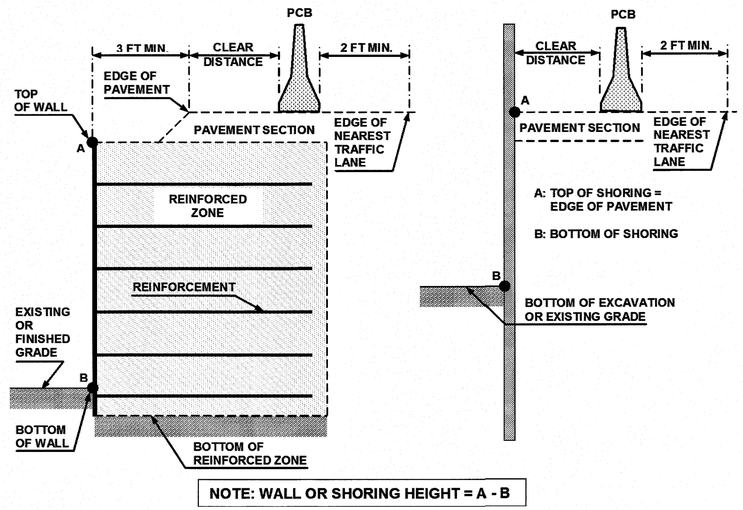

FIGURE A

NOTES

1- REFER TO THE TRAFFIC CONTROL PLANS FOR TEMPORARY SHORING LOCATIONS AND NOTES.

2- REFER TO THE "TEMPORARY SHORING" PROJECT SPECIAL PROVISION FOR INFORMATION ABOUT TEMPORARY SHORING AND PORTABLE CONCRETE BARRIER (PCB).

3- PCB IS REQUIRED IF TEMPORARY SHORING IS LOCATED WITHIN THE CLEAR ZONE IN ACCORDANCE WITH THE AASHTO ROADSIDE DESIGN GUIDE. DO NOT PLACE BARRIER DIRECTLY ON ANY SURFACE OTHER THAN ASPHALT OR CONCRETE. (CONTACT NCDOT PAVEMENT MANAGEMENT UNIT FOR APPLICABLE PAVEMENT DESIGN).

4- BASED ON THE CLEAR DISTANCE, OFFSET, DESIGN SPEED AND PAVEMENT TYPE, CHOOSE AN UNANCHORED OR ANCHORED PCB FROM THE TABLE SHOWN IN FIGURE B. CLEAR DISTANCE IS DEFINED AS SHOWN IN FIGURE A AND OFFSET IS DEFINED AS SHOWN IN FIGURE B.

5- AT THE CONTRACTOR'S OPTION OR IF THE MINIMUM REQUIRED CLEAR DISTANCE IS NOT AVAILABLE, SET PCB NEXT TO AND UP AGAINST THE TRAFFIC SIDE OF THE TEMPORARY SHORING EXCEPT FOR BARRIER ABOVE TEMPORARY WALLS. PCB WITH THE MINIMUM REQUIRED CLEAR DISTANCE IS REQUIRED ABOVE TEMPORARY WALLS.

6- USE NCDOT PORTABLE CONCRETE BARRIER (PCB) IN ACCORDANCE WITH ROADWAY STANDARD DRAWING NO. 1170.01 AND SECTION 1170 OF THE STANDARD SPECIFICATIONS.

7- PCB REQUIREMENTS FOR TEMPORARY WALLS APPLY TO TEMPORARY MECHANICALLY STABILIZED EARTH (MSE) WALLS AND TEMPORARY SOIL NAIL WALLS.

8- SET PCB WITH A MINIMUM HORIZONTAL DISTANCE OF 2 FT BETWEEN THE FRONT FACE OF THE BARRIER AND THE EDGE OF THE NEAREST TRAFFIC LANE AS SHOWN IN FIGURE A UNLESS OTHERWISE SHOWN IN THE PLANS AND OR AS APPROVED BY THE ENGINEER.

9- FOR PCB ABOVE AND BEHIND TEMPORARY WALLS, PROVIDE A MINIMUM DISTANCE OF 3 FT BETWEEN THE EDGE OF PAVEMENT AND THE WALL FACE AS SHOWN IN FIGURE A. IF THESE MINIMUM REQUIRED DISTANCES ARE NOT AVAILABLE, CONTACT THE ENGINEER.

10- TABLE SHOWN IN FIGURE B IS BASED ON NCDOT RESEARCH PROJECT NO. 2005-010 WITH VEHICLE TYPE USED FOR NCHRP 350 CRASH TESTS. BARRIER DEFLECTIONS AND RESULTING MINIMUM REQUIRED CLEAR DISTANCES MIGHT VARY SIGNIFICANTLY FOR LARGER HEAVIER VEHICLES, RUNS OF BARRIER LESS THAN 200 FT IN LENGTH AND WET OR DRY PAVEMENT.

MINIMUM REQUIRED CLEAR DISTANCE, inches

Barrier Type	Pavement Type	Offset * ft	Design Speed, mph <30	31-40	41-50	51-60	61-70	71-80
Unanchored PCB	Asphalt	<8	24	26	29	32	36	40
		8-14	26	28	31	35	38	42
		14-20	27	29	34	36	39	43
		20-26	28	31	35	38	40	44
		26-32	29	32	36	39	42	45
		32-38	30	34	38	41	43	46
		38-44	31	34	41	43	45	48
		44-50	31	35	41	43	46	49
		50-56	32	36	42	44	47	50
		>56	32	36	42	45	47	51
	Concrete	<8	17	18	21	22	25	26
		8-14	19	20	23	25	26	29
		14-20	22	22	24	26	28	31
		20-26	23	24	26	27	30	34
		26-32	24	25	27	28	32	35
		32-38	24	26	27	30	33	36
		38-44	25	26	28	30	34	37
		44-50	26	26	28	32	35	37
		50-56	26	26	28	32	35	38
		>56	26	27	29	32	36	38
Anchored PCB	Asphalt	All Offsets	24 for All Design Speeds					
Anchored PCB	Concrete (including bridge approach slabs)	All Offsets	12 for All Design Speeds					

* See Figure Below

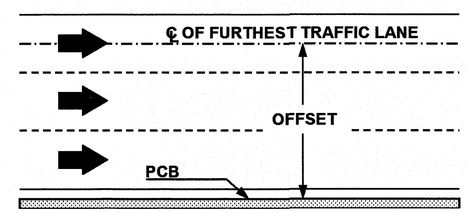

FIGURE B

APPROVED:_____ DATE:_____

SEAL

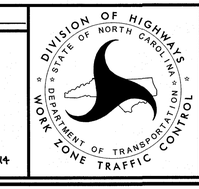

PORTABLE CONCRETE BARRIER
AT
TEMPORARY SHORING LOCATIONS

6/19/2014
:\TCP\B-3458_TC_TMP-2.dgn
User:kphinney

PROJ. REFERENCE NO.	SHEET NO.
B-3458	TMP-3

RAMEY KEMP & ASSOCIATES, INC.
Transportation Engineers
5808 Faringdon Place, Suite 100
Raleigh, North Carolina 27609
919-872-5115 Tel. 919-878-5416 Fax.
www.rameykemp.com
NC License No. C-0910

TEMPORARY SHORING NOTES:

FOR TEMPORARY SHORING, AND POSITIVE PROTECTION FOR TEMPORARY SHORING, SEE PLANS AND TEMPORARY SHORING PROVISION.

TEMPORARY SHORING SHOWN IS APPROXIMATE ONLY. ACTUAL LOCATION OF TEMPORARY SHORING TO BE DETERMINED BY CONTRACTOR.

BEFORE BEGINNING TEMPORARY SHORING DESIGN OR CONSTRUCTION, SURVEY EXISTING GROUND ELEVATIONS IN THE VICINITY OF SHORING LOCATIONS TO DETERMINE ACTUAL SHORING HEIGHTS.

TEMPORARY SHORING NOTES (CONT.):

LIMITED SUBSURFACE INFORMATION IS AVAILABLE IN THE VICINITY OF THE TEMPORARY SHORING. THE INFORMATION PROVIDED FOR DESIGN WAS ASSUMED AND MAY NOT BE APPLICABLE TO THE ACTUAL SITE CONDITIONS ENCOUNTERED DURING CONSTRUCTION.

DO NOT USE A TEMPORARY WALL FOR THE TEMPORARY SHORING.

NEW CONSTRUCTION SHOULD TIE INTO EXISTING PAVEMENT WHEREVER POSSIBLE.

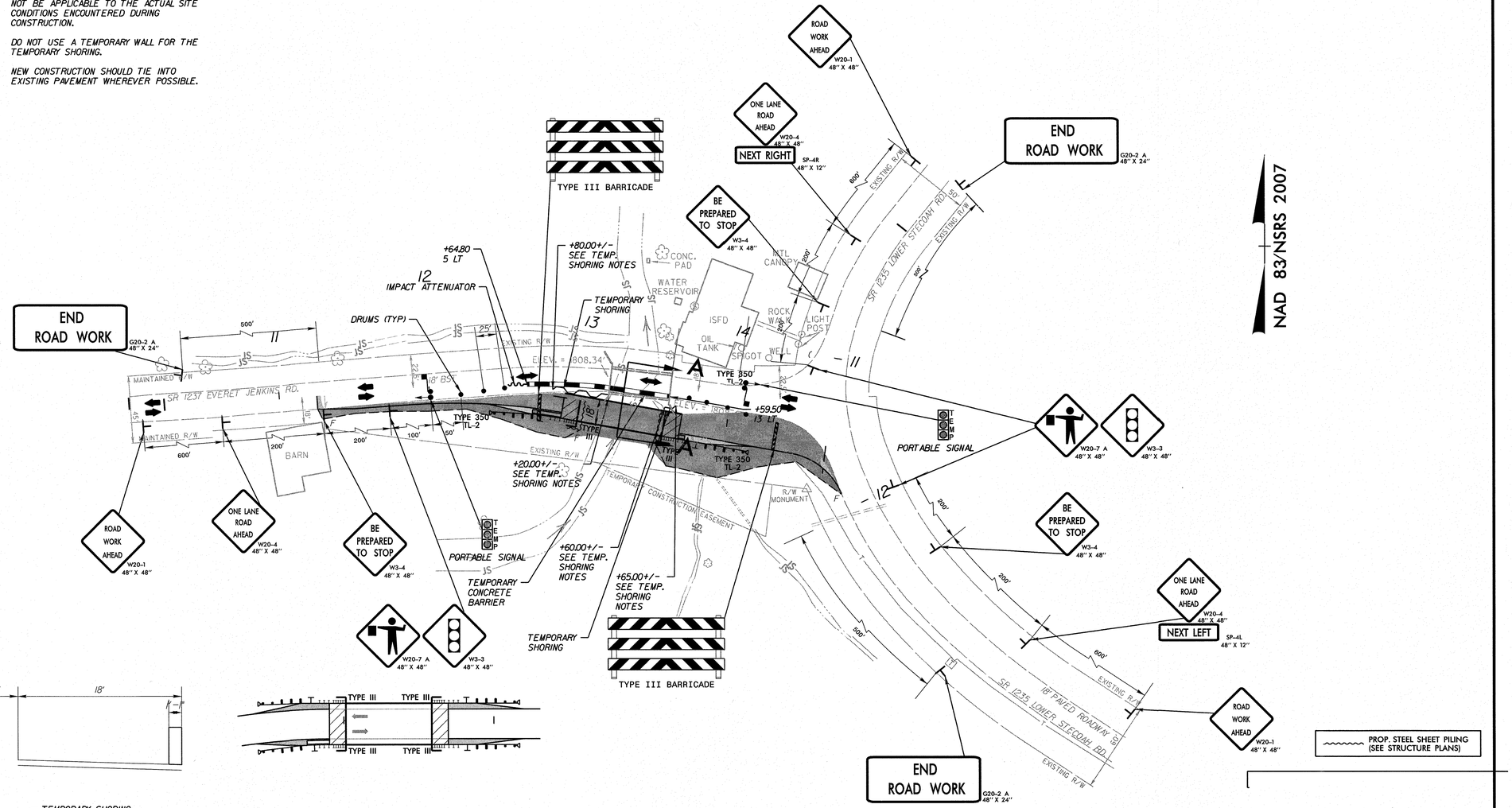

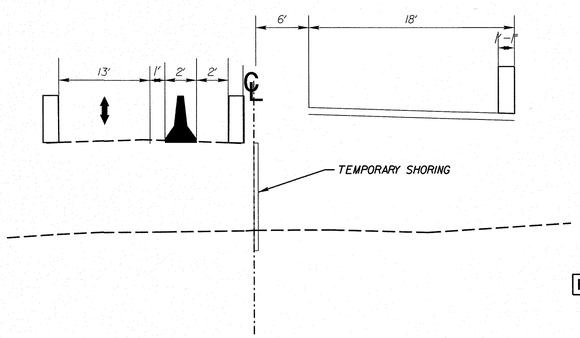

SECTION A-A

FOR STRUCTURE PLANS, SEE SHEET S-1 THRU S-18

APPROVED: _____ DATE: _____

SEAL

NORTH CAROLINA PROFESSIONAL SEAL 24240 ENGINEER R. KYLE PHINNEY

07-24-2014

DIVISION OF HIGHWAYS STATE OF NORTH CAROLINA DEPARTMENT OF TRANSPORTATION WORK ZONE TRAFFIC CONTROL

TEMPORARY TRAFFIC CONTROL PHASE I

7/11/2014
...\TCP\B-3458_TC_TMP-3.dgn
User-kphinney

PROJ. REFERENCE NO.	SHEET NO.
B-3458	TMP-4

RAMEY KEMP & ASSOCIATES, INC.
Transportation Engineers
5808 Faringdon Place, Suite 100
Raleigh, North Carolina 27609
919-872-5115 Tel. 919-878-5416 Fax.
www.rameykemp.com
NC License No. C-0910

TEMPORARY SHORING NOTES:

FOR TEMPORARY SHORING, AND POSITIVE PROTECTION FOR TEMPORARY SHORING, SEE PLANS AND TEMPORARY SHORING PROVISION.

TEMPORARY SHORING SHOWN IS APPROXIMATE ONLY. ACTUAL LOCATION OF TEMPORARY SHORING TO BE DETERMINED BY CONTRACTOR.

BEFORE BEGINNING TEMPORARY SHORING DESIGN OR CONSTRUCTION, SURVEY EXISTING GROUND ELEVATIONS IN THE VICINITY OF SHORING LOCATIONS TO DETERMINE ACTUAL SHORING HEIGHTS.

TEMPORARY SHORING NOTES (CONT.):

LIMITED SUBSURFACE INFORMATION IS AVAILABLE IN THE VICINITY OF THE TEMPORARY SHORING. THE INFORMATION PROVIDED FOR DESIGN WAS ASSUMED AND MAY NOT BE APPLICABLE TO THE ACTUAL SITE CONDITIONS ENCOUNTERED DURING CONSTRUCTION.

DO NOT USE A TEMPORARY WALL FOR THE TEMPORARY SHORING.

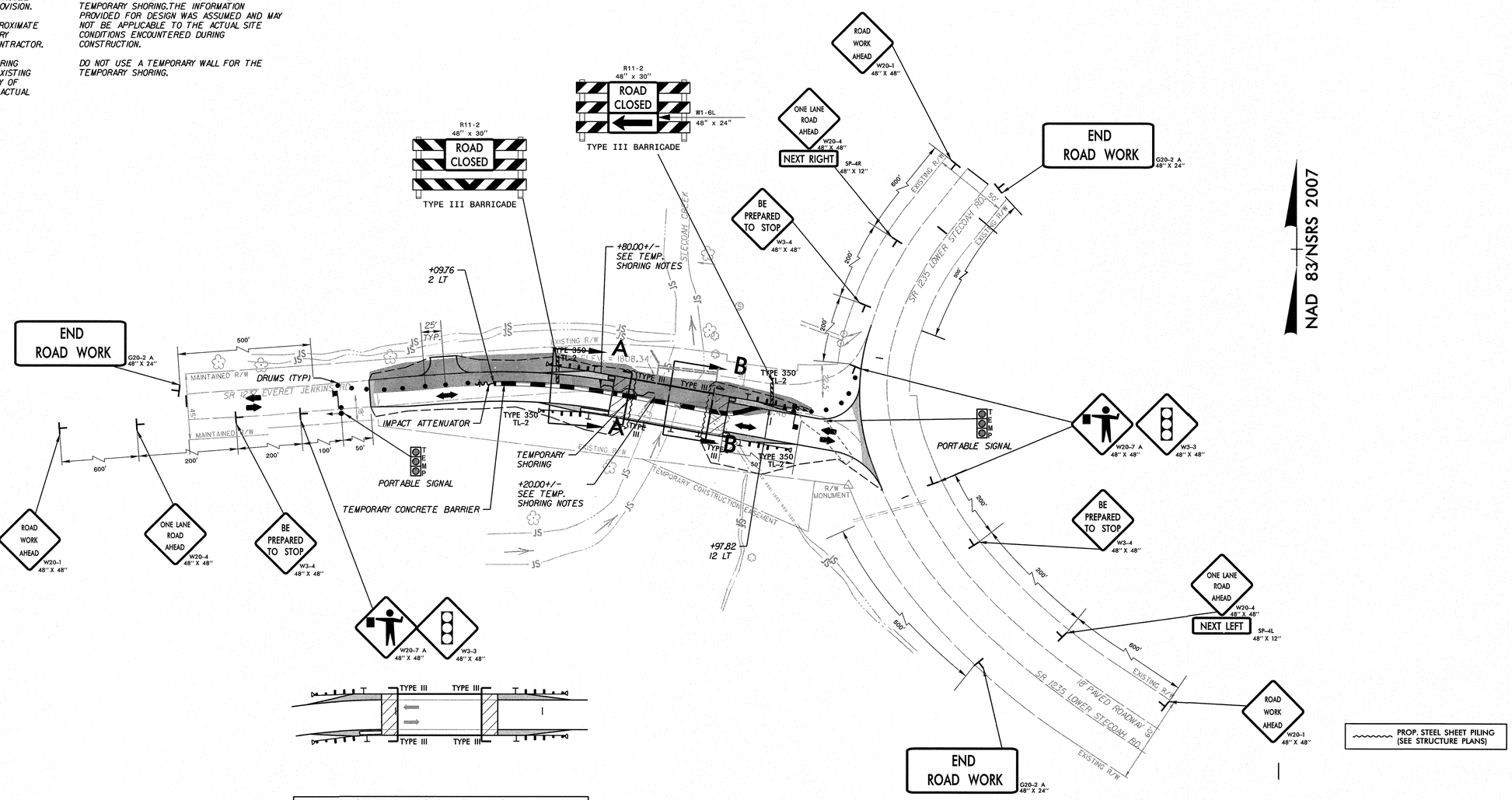

FOR STRUCTURE PLANS, SEE SHEET S-1 THRU S-18

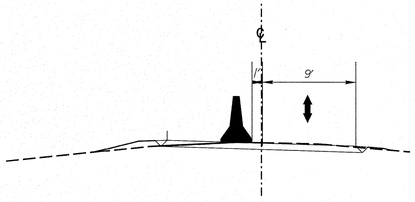

SECTION A-A

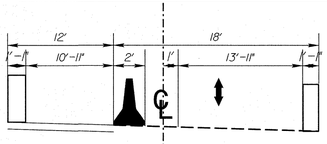

SECTION B-B

NOTES:
1. MAY USE FLAGGER OPERATIONS DURING DAYTIME AND PORTABLE SIGNAL WHEN CONTRACTOR IS NOT PRESENT.
2. CONTRACTOR(S) TO COORDINATE ACCESS POINT(S) TO CONSTRUCTIONS ZONE AND PROVIDE TYPE III BARRICADE.

APPROVED: _____ DATE: _____

SEAL

NORTH CAROLINA PROFESSIONAL SEAL 040440 ENGINEER R. KYLE PHINNEY 07-24-2014

DIVISION OF HIGHWAYS STATE OF NORTH CAROLINA DEPARTMENT OF TRANSPORTATION WORK ZONE TRAFFIC CONTROL

TEMPORARY TRAFFIC CONTROL PHASE II

6/19/2014
...\TCP\B-3458_TC_TMP-4.dgn
User:kphinney

PROJECT REFERENCE NO.	SHEET NO.
B-3458	PMP-01
R/W SHEET NO.	
ROADWAY DESIGN ENGINEER	HYDRAULICS ENGINEER

NORTH CAROLINA PROFESSIONAL SEAL 024040 ENGINEER R. KYLE PHINNEY 07-24-2014

RAMEY KEMP & ASSOCIATES, INC.
Transportation Engineers
5808 Faringdon Place, Suite 100
Raleigh, North Carolina 27609
919-872-5115 Tel. 919-878-5416 Fax.
www.rameykemp.com
NC License No. C-0910

LEGEND

PAVEMENT MARKING LINES

---------- THERMOPLASTIC (4", 90 mils)
TA - WHITE EDGE LINE
TB - YELLOW EDGE LINE

---------- THERMOPLASTIC (4", 120 mils)
TC - 10 ft. WHITE SKIP
TD - 3 ft.-9ft./SP WHITE MINI SKIP
TE - WHITE SOLID LANE LINE
TF - 10 ft. YELLOW SKIP
TH - YELLOW SINGLE CENTER LINE
TI - YELLOW DOUBLE CENTER LINE
T8 - 2 ft.-6ft./SP WHITE MINI SKIP
T9 - 2 ft.-6ft./SP YELLOW MINI SKIP

--------- THERMOPLASTIC (8", 90 mils)
TP - YELLOW DIAGONAL
TQ - WHITE CROSSWALK LINE
TU - WHITE DIAGONAL
TV - YELLOW DIAGONAL

---------THERMOPLASTIC (24", 120 mils)
T2 - WHITE STOP BAR
T3 - WHITE CROSSWALK LINE

----------PAINT (4")
PA - WHITE EDGELINE
PB - YELLOW EDGELINE

PAVEMENT MARKING SYMBOLS

--------- THERMOPLASTIC (90 mils)
UA - LEFT TURN ARROW
UB - RIGHT TURN ARROW
UC - STRAIGHT ARROW
UD - COMBINATION STRAIGHT & LEFT TURN ARROW
UE - COMBINATION STRAIGHT & RIGHT TURN ARROW
UF - COMBINATION LEFT & RIGHT TURN ARROW
UG - COMBINATION LEFT/STRAIGHT/RIGHT TURN ARROW
UN - 24" YIELDLINE TRIANGLE

NOTES:

1. ALL PAVEMENT MARKINGS SHALL FOLLOW THE JANUARY 2012 NCDOT STANDARDS AND SPECIFICATIONS.

2. REMOVE ALL CONFLICTING EXISTING PAVEMENT MARKINGS AND SIGNS WITHIN THE CONSTRUCTION AREA.

3.SEE APPROVED TRAFFIC SIGNAL PLAN FOR LOCATIONS OF PROPOSED STOP BARS AT ALL SIGNALIZED INTERSECTIONS.

4. INSTALL SNOWPLOWABLE PAVEMENT MARKERS PER NCDOT STANDARDS ON ALL LANE LINES.

5.REFER TO NCDOT AND MUTCD GUIDELINES FOR SIGNAGE.

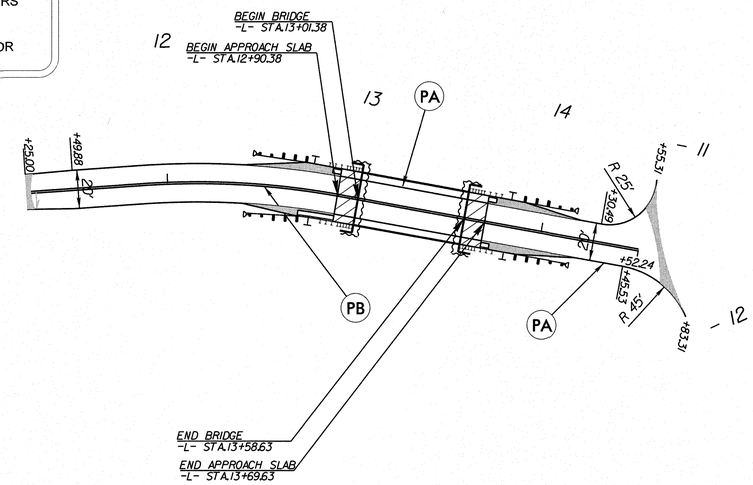

REVISIONS

6/23/2014
I:\3031-rdy-pmp01.dgn
User:kphinney

TIP PROJECT: B-3458

See Sheet 1-A For Index of Sheets
See Sheet 1-B For Symbology

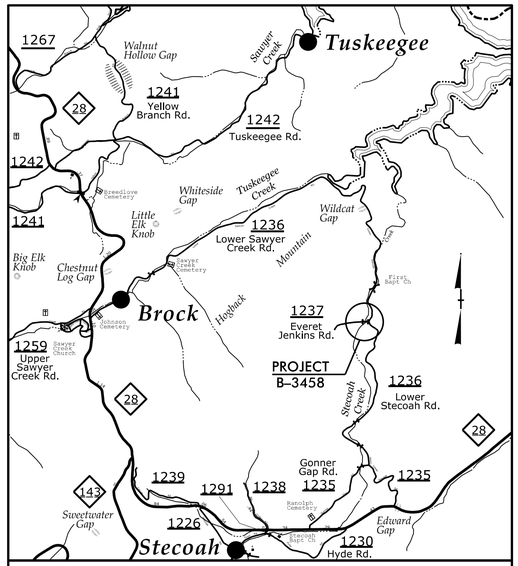

VICINITY MAP (N.T.S.)

STATE OF NORTH CAROLINA
DIVISION OF HIGHWAYS

PLAN FOR PROPOSED
HIGHWAY EROSION CONTROL

GRAHAM COUNTY

LOCATION: BRIDGE #114 OVER STECOAH CREEK ON SR 1237 (EVERET JENKINS RD.)

TYPE OF WORK: GRADING, DRAINAGE, PAVING AND STRUCTURE

NAD 83

STATE	STATE PROJECT REFERENCE NO.	SHEET NO.	TOTAL SHEETS
N.C.	B-3458	EC-1	

STATE PROJ. NO.	F.A. PROJ. NO.	DESCRIPTION

EROSION AND SEDIMENT CONTROL MEASURES

Std. #	Description	Symbol
1630.03	Temporary Silt Ditch	TSD
1630.05	Temporary Diversion	TD
1605.01	Temporary Silt Fence	
1606.01	Special Sediment Control Fence	
1622.01	Temporary Berms and Slope Drains	
1630.02	Silt Basin Type B	
1633.01	Temporary Rock Silt Check Type-A	
	Temporary Rock Silt Check Type-A with Matting and Polyacrylamide (PAM)	
1633.02	Temporary Rock Silt Check Type-B	
	Wattle / Coir Fiber Wattle	SW CFW
	Wattle / Coir Fiber Wattle with Polyacrylamide (PAM)	
1634.01	Temporary Rock Sediment Dam Type-A	
1634.02	Temporary Rock Sediment Dam Type-B	
1635.01	Rock Pipe Inlet Sediment Trap Type-A	
1635.02	Rock Pipe Inlet Sediment Trap Type-B	
1630.04	Stilling Basin	
1630.06	Special Stilling Basin	
	Rock Inlet Sediment Trap:	
1632.01	Type A	A
1632.02	Type B	B
1632.03	Type C	C
	Skimmer Basin	
	Tiered Skimmer Basin	
	Infiltration Basin	

THIS PROJECT CONTAINS EROSION CONTROL PLANS FOR CLEARING AND GRUBBING PHASE OF CONSTRUCTION.

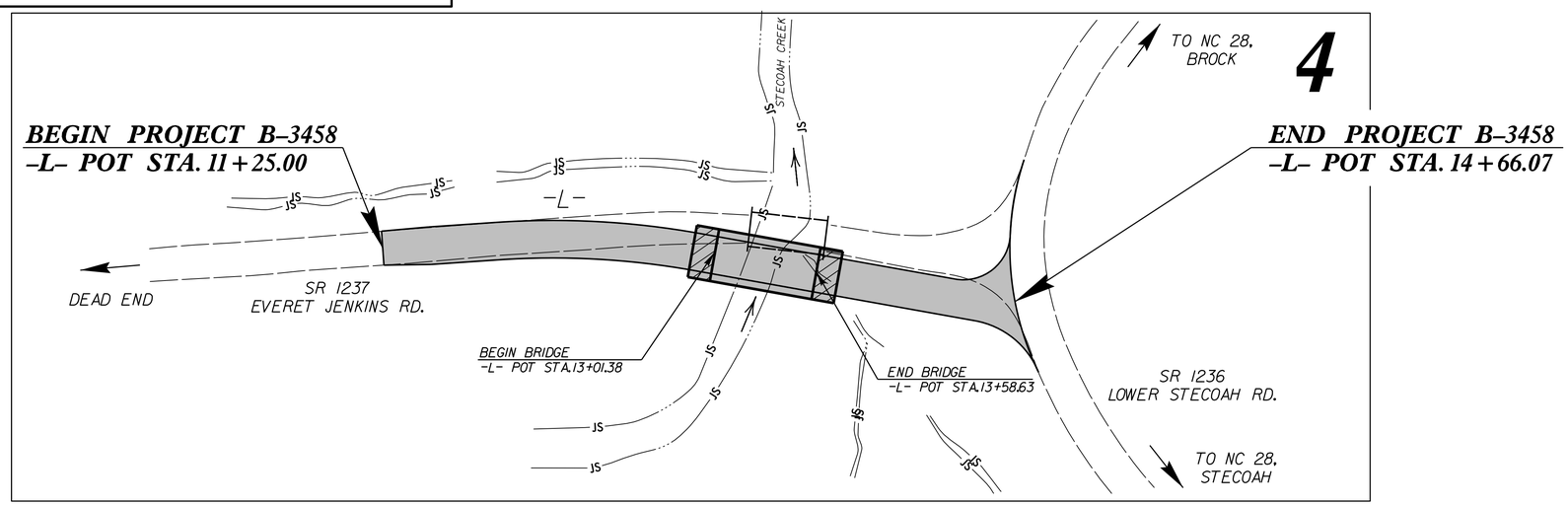

KEVIN S. HUTCHENS, PE
LEVEL III NAME

3635
LEVEL III CERTIFICATION NO.

GRAPHIC SCALE

20 0 40
PLANS

20 0 40
PROFILE (HORIZONTAL)

4 0 8
PROFILE (VERTICAL)

ROADSIDE ENVIRONMENTAL UNIT
DIVISION OF HIGHWAYS
STATE OF NORTH CAROLINA

THESE EROSION AND SEDIMENT CONTROL PLANS COMPLY WITH THE REGULATIONS SET FORTH BY THE NCG-010000 GENERAL CONSTRUCTION PERMIT EFFECTIVE AUGUST 3, 2011 ISSUED BY THE NORTH CAROLINA DEPARTMENT OF ENVIRONMENT AND NATURAL RESOURCES DIVISION OF WATER QUALITY.

Prepared in the Office of:

M A Engineering Consultants, Inc.
598 East Chatham Street - Suite 137
Cary, NC 27511
Phone: 919.297.0220 Fax: 919.297.0221

for

NCDOT DIVISION 14

NCDOT CONTACT: JOSH DEYTON, PE
DIVISION 14 BRIDGE PROGRAM MANAGER

2012 STANDARD SPECIFICATIONS

Roadway Standard Drawings

The following roadway english standards as appear in "Roadway Standard Drawings"– Roadway Design Unit – N. C. Department of Transportation – Raleigh, N. C., dated January 2012 and the latest revison thereto are applicable to this project and by reference hereby are considered a part of these plans.

1604.01	Railroad Erosion Control Detail	1632.01	Rock Inlet Sediment Trap Type A
1605.01	Temporary Silt Fence	1632.02	Rock Inlet Sediment Trap Type B
1606.01	Special Sediment Control Fence	1632.03	Rock Inlet Sediment Trap Type C
1607.01	Gravel Construction Entrance	1633.01	Temporary Rock Silt Check Type A
1622.01	Temporary Berms and Slope Drains	1633.02	Temporary Rock Silt Check Type B
1630.01	Riser Basin	1634.01	Temporary Rock Sediment Dam Type A
1630.02	Silt Basin Type B	1634.02	Temporary Rock Sediment Dam Type B
1630.03	Temporary Silt Ditch	1635.01	Rock Pipe Inlet Sediment Trap Type A
1630.04	Stilling Basin	1635.02	Rock Pipe Inlet Sediment Trap Type B
1630.05	Temporary Diversion	1640.01	Coir Fiber Baffle
1630.06	Special Stilling Basin	1645.01	Temporary Stream Crossing
1631.01	Matting Installation		

7/2/2014
r:\hydraulics\eec\B3458_EC_tsh.dgn

PROJECT REFERENCE NO.	SHEET NO.
B-3458	EC-2

COIR FIBER WATTLE WITH POLYACRYLAMIDE (PAM) DETAIL

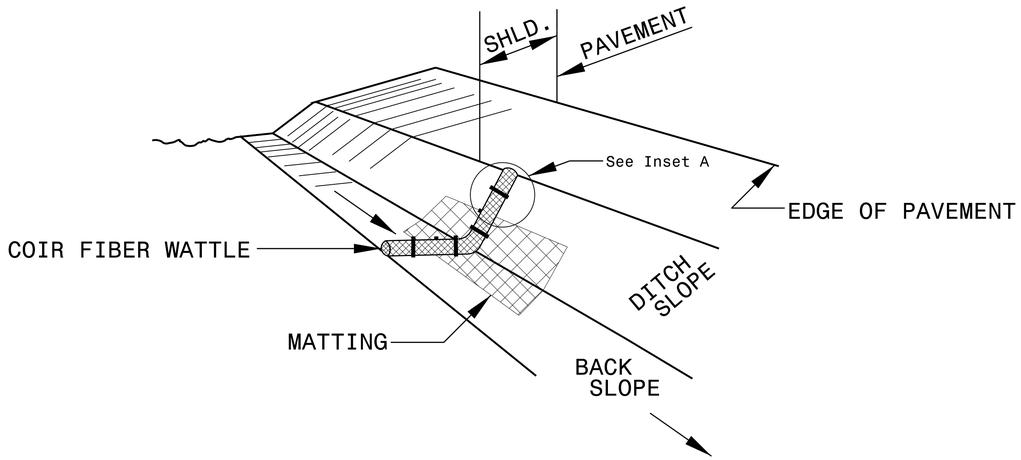

ISOMETRIC VIEW

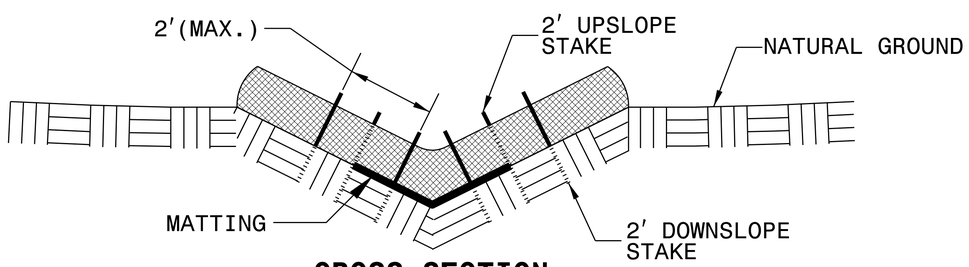

CROSS SECTION VEE DITCH

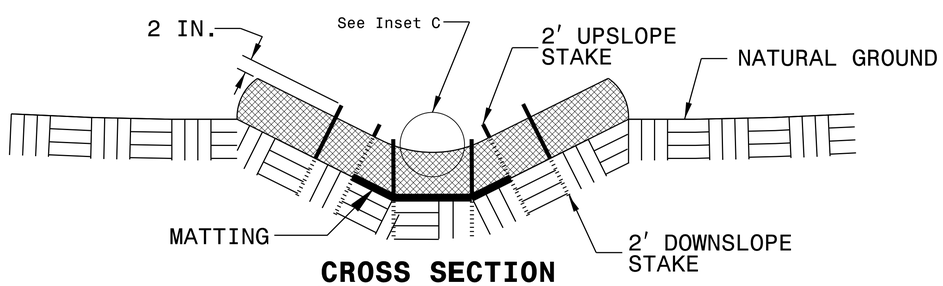

CROSS SECTION TRAPEZOIDAL DITCH

NOTES:

USE MINIMUM 12 IN. DIAMETER COIR FIBER (COCONUT FIBER) WATTLE.

USE 2 FT. WOODEN STAKES WITH A 2 IN. BY 2 IN. NOMINAL CROSS SECTION.

ONLY INSTALL WATTLE(S) TO A HEIGHT IN DITCH SO FLOW WILL NOT WASH AROUND WATTLE AND SCOUR DITCH SLOPES AND AS DIRECTED.

INSTALL A MINIMUM OF 2 UPSLOPE STAKES AND 4 DOWNSLOPE STAKES AT AN ANGLE TO WEDGE WATTLE TO BOTTOM OF DITCH.

PROVIDE STAPLES MADE OF 0.125 IN. DIAMETER STEEL WIRE FORMED INTO A U SHAPE NOT LESS THAN 12″ IN LENGTH.

INSTALL STAPLES APPROXIMATELY EVERY 1 LINEAR FOOT ON BOTH SIDES OF WATTLE AND AT EACH END TO SECURE IT TO THE SOIL.

INSTALL MATTING IN ACCORDANCE WITH SECTION 1631 OF THE STANDARD SPECIFICATIONS.

PRIOR TO POLYACRYLAMIDE (PAM) APPLICATION, OBTAIN A SOIL SAMPLE FROM PROJECT LOCATION, AND FROM OFFSITE MATERIAL, AND ANALYZE FOR APPROPRIATE PAM FLOCCULANT TO BE APPLIED TO EACH WATTLE.

INITIALLY APPLY 2 OUNCES OF ANIONIC OR NEUTRALLY CHARGED PAM OVER WATTLE WHERE WATER WILL FLOW AND 1 OUNCE OF PAM ON MATTING ON EACH SIDE OF WATTLE. REAPPLY PAM AFTER EVERY RAINFALL EVENT THAT IS EQUAL TO OR EXCEEDS 0.50 IN.

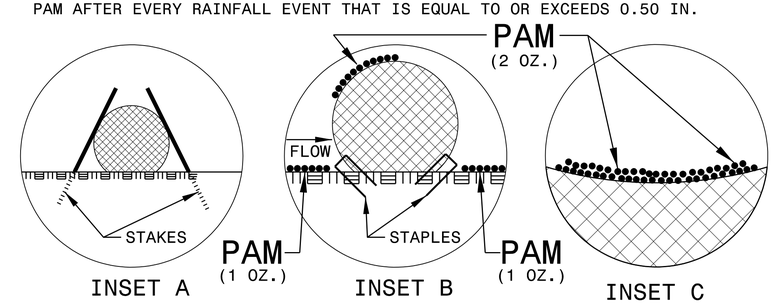

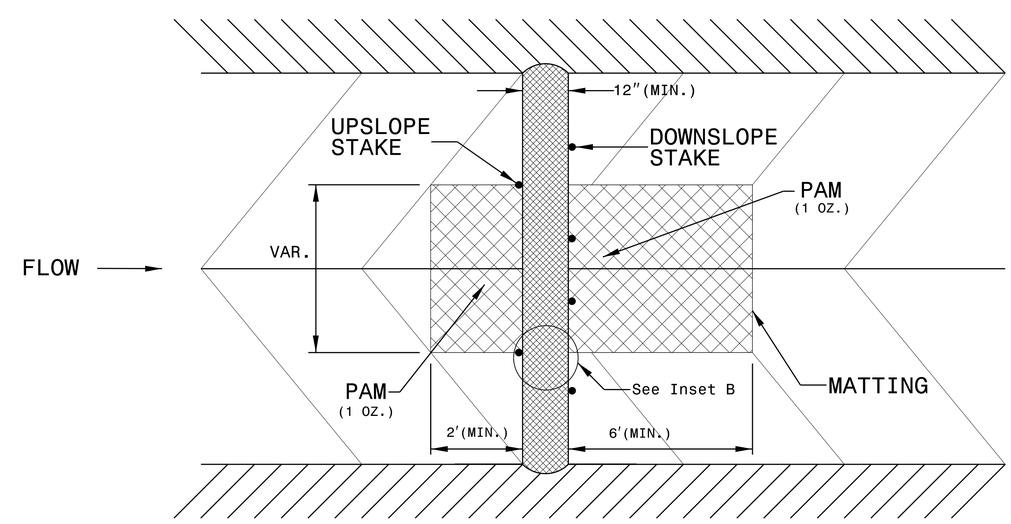

TOP VIEW

PROJECT REFERENCE NO.	SHEET NO.
B-3458	EC-3

DIVISION OF HIGHWAYS
STATE OF NORTH CAROLINA

SOIL STABILIZATION SUMMARY SHEET

MATTING FOR EROSION CONTROL

CONST SHEET NO.	LINE	FROM STATION	TO STATION	SIDE	ESTIMATE (SY)
			SUBTOTAL		0
MISCELLANEOUS MATTING TO BE INSTALLED AS DIRECTED BY THE ENGINEER					2900
				TOTAL	2900
				SAY	3000

COIR FIBER MAT

CONST SHEET NO.	LINE	FROM STATION	TO STATION	SIDE	ESTIMATE (SY)
4	L	13+63	14+25	LT	70
4	L	13+33	14+09	RT	60
			SUBTOTAL		130
	ADDITIONAL COIR FIBER MAT TO BE INSTALLED				100
				TOTAL	230
				SAY	250

SOIL STABILIZATION TIME FRAMES

SITE DESCRIPTION	STABILIZATION TIME	TIMEFRAME EXCEPTIONS
PERIMETER DIKES, SWALES, DITCHES AND SLOPES	7 DAYS	NONE
HIGH QUALITY WATER (HQW) ZONES	7 DAYS	NONE
SLOPES STEEPER THAN 3:1	7 DAYS	IF SLOPES ARE 10' OR LESS IN LENGTH AND ARE NOT STEEPER THAN 2:1, 14 DAYS ARE ALLOWED.
SLOPES 3:1 OR FLATTER	14 DAYS	7 DAYS FOR SLOPES GREATER THAN 50' IN LENGTH.
ALL OTHER AREAS WITH SLOPES FLATTER THAN 4:1	14 DAYS	NONE, EXCEPT FOR PERIMETERS AND HQW ZONES.

8/17/99

PROJECT REFERENCE NO.	SHEET NO.
B-3458	EC-4

MA Engineering CONSULTANTS, INC.
598 East Chatham Street Suite 137 Cary, NC 27511
Phone: 919.297.0220 Fax: 919.297.0221

NAD 83/NSRS 2007

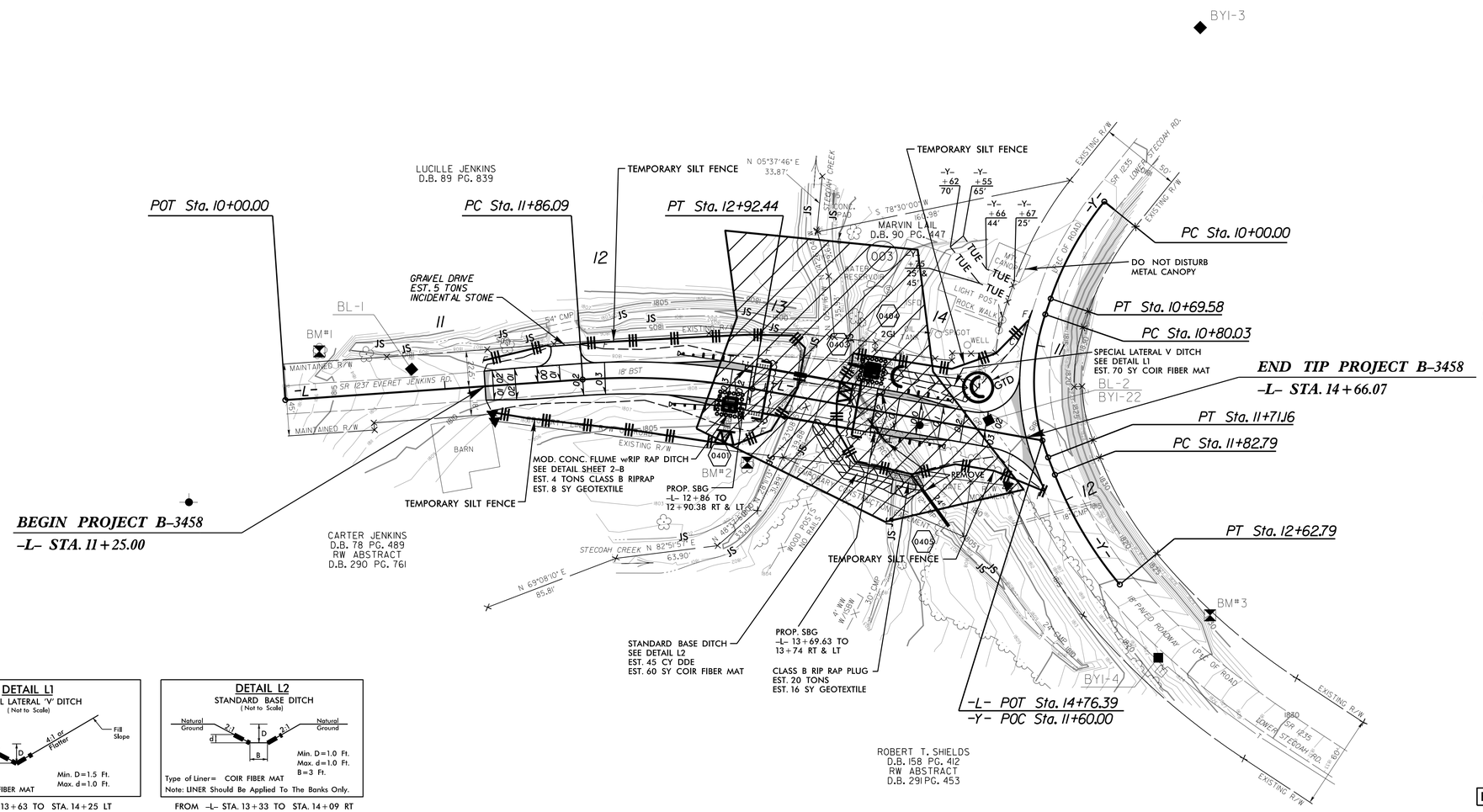

PROP. STEEL SHEET PILING (SEE STRUCTURE PLANS)

FOR STRUCTURE PLANS, SEE SHEET S-1 THRU S-18

DETAIL L1
SPECIAL LATERAL 'V' DITCH
(Not to Scale)

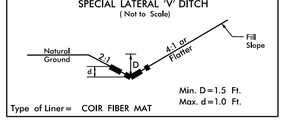

FROM -L- STA. 13+63 TO STA. 14+25 LT

DETAIL L2
STANDARD BASE DITCH
(Not to Scale)

FROM -L- STA. 13+33 TO STA. 14+09 RT

FOR DETAIL L2, INSTALL COIR FIBER MATTING ONLY ON THE PROPOSED BANKS OF THE CHANNEL RELOCATION.

ENVIRONMENTALLY SENSITIVE AREA
SEE PROJECT SPECIAL PROVISIONS

NOTES: ANY DEVIATION FROM OPTIONS GIVEN WILL REQUIRE PRIOR APPROVAL BY ENGINEER.

ADDITIONAL EROSION CONTROL DEVICES MAY NEED TO BE INSTALLED AS DIRECTED BY THE ENGINEER.

STATE	STATE PROJECT REFERENCE NO.	SHEET NO.	TOTAL SHEETS
N.C.	B-3458	RF-1	

STATE PROJ. NO.	F. A. PROJ. NO.	DESCRIPTION

PLANTING DETAILS

SEEDLING / LINER BAREROOT PLANTING DETAIL

HEALING IN

1. Locate a healing-in site in a shady, well protected area.
2. Excavate a flat bottom trench 12 inches deep and provide drainage.

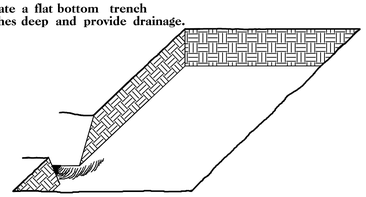

3. Backfill the trench with 2 inches well rotted sawdust. Place a 2 inch layer of well rotted sawdust at a sloping angle at one end of the trench.

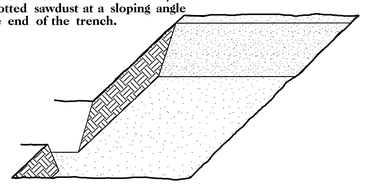

4. Place a single layer of plants against the sloping end so that the root collar is at ground level.

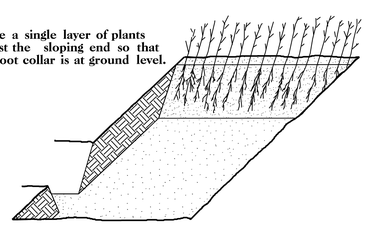

5. Place a 2 inch layer of well rotted sawdust over the roots maintaining a sloping angle.

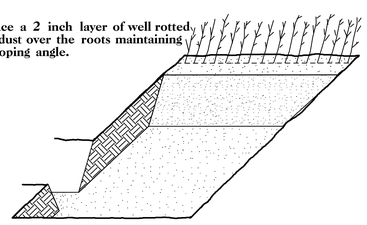

6. Repeat layers of plants and sawdust as necessary and water thoroughly.

DIBBLE PLANTING METHOD
USING THE KBC PLANTING BAR

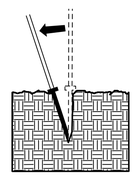

1. Insert planting bar as shown and pull handle toward planter.

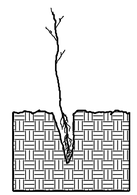

2. Remove planting bar and place seedling at correct depth.

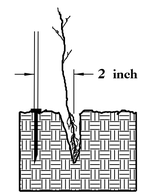

3. Insert planting bar 2 inches toward planter from seedling.

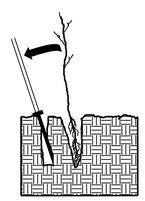

4. Pull handle of bar toward planter, firming soil at bottom.

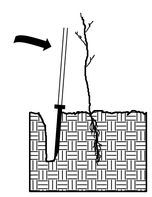

5. Push handle forward firming soil at top.

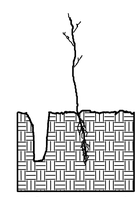

6. Leave compaction hole open. Water thoroughly.

PLANTING NOTES:

PLANTING BAG
During planting, seedlings shall be kept in a moist canvas bag or similar container to prevent the root systems from drying.

KBC PLANTING BAR
Planting bar shall have a blade with a triangular cross section, and shall be 12 inches long, 4 inches wide and 1 inch thick at center.

ROOT PRUNING
All seedlings shall be root pruned, if necessary, so that no roots extend more than 10 inches below the root collar.

REFORESTATION

☐ TREE REFORESTATION SHALL BE PLANTED 6 FT. TO 10 FT. ON CENTER, RANDOM SPACING, AVERAGING 8 FT. ON CENTER, APPROXIMATELY 680 PLANTS PER ACRE.

REFORESTATION

MIXTURE, TYPE, SIZE, AND FURNISH SHALL CONFORM TO THE FOLLOWING:

25%	LIRIODENDRON TULIPIFERA	TULIP POPLAR	12 in – 18 in BR
25%	PLATANUS OCCIDENTALIS	SYCAMORE	12 in – 18 in BR
25%	FRAXINUS PENNSYLVANICA	GREEN ASH	12 in – 18 in BR
25%	BETULA NIGRA	RIVER BIRCH	12 in – 18 in BR

REFORESTATION DETAIL SHEET

N.C.D.O.T. - ROADSIDE ENVIRONMENTAL UNIT

TIP PROJECT: B–3458

T.I.P. NO.	SHEET NO.
B–3458	UO–1

STATE OF NORTH CAROLINA
DIVISION OF HIGHWAYS

UTILITIES BY OTHERS PLANS
GRAHAM COUNTY

LOCATION: BRIDGE NO. 114 OVER STECOAH CREEK ON SR 1237 (EVERET JENKINS RD.)

TYPE OF WORK: UTILITY BY OTHERS RELOCATION

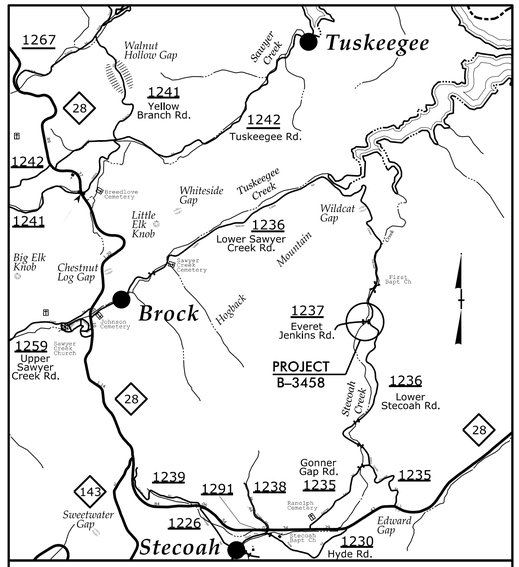

VICINITY MAP (N.T.S.)

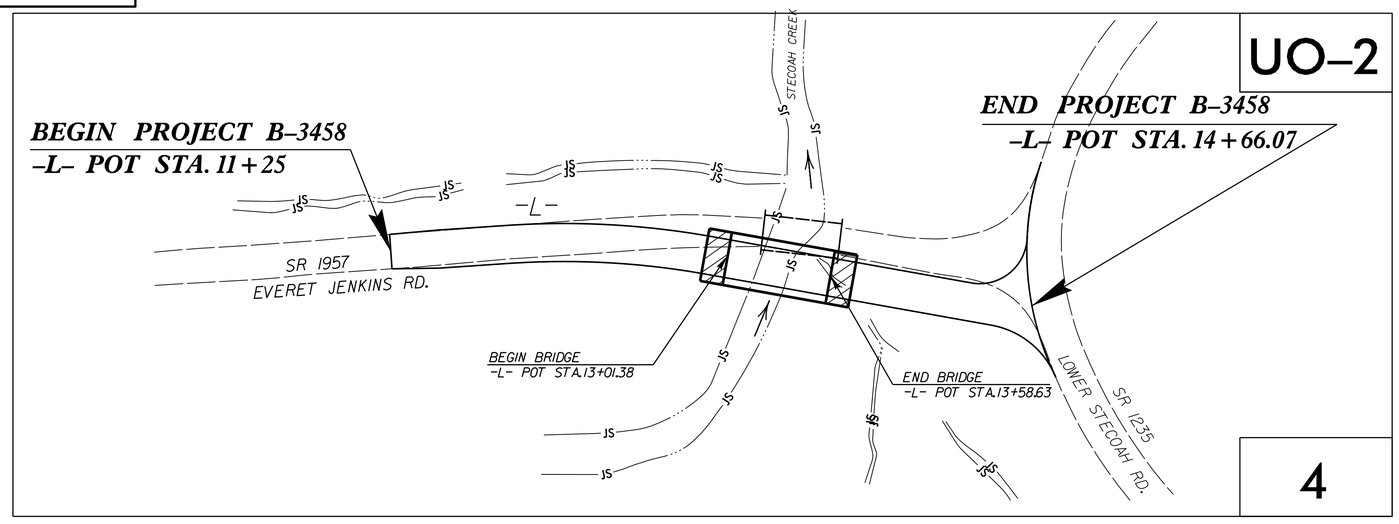

GRAPHIC SCALES

PLANS: 20 10 0 40 80

PROFILE (HORIZONTAL): 20 10 0 40 80

PROFILE (VERTICAL): 4 2 0 8 16

INDEX OF SHEETS

SHEET NO.	DESCRIPTION
UO–1	TITLE SHEET
UO–2	PLAN SHEET

UTILITY OWNERS ON PROJECT

(1) POWER – DUKE ENERGY PROGRESS

PLANS PREPARED BY:
MA Engineering CONSULTANTS, INC.
598 East Chatham Street Suite 137 Cary, NC 27511
Phone: 919 297 0220 Fax: 919 297 0221

NCDOT PROJECT ENGINEER:
JOSH DEYTON, P.E.

PREPARED FOR:
NORTH CAROLINA
DEPARTMENT OF TRANSPORTATION
DIVISION 14 BRIDGE PROGRAM

09/08/99
7/2/2014
6:10:05 PM

PROJECT REFERENCE NO.	SHEET NO.
B-3458	UO-2

UTILITIES BY OTHERS

NOTE:
ALL PROPOSED UTILITY WORK SHOWN ON THIS SHEET WILL BE DONE BY OTHERS

NOTE:

1) POWER COMPANY SHALL RELOCATE TEMPORARILY VIA UNDERGROUND INSTALLATION AND SHALL RETURN TO ORIGINAL AERIAL ALIGNMENT ONCE PROPOSED ROADWAY CONSTRUCTION HAS BEEN COMPLETED.

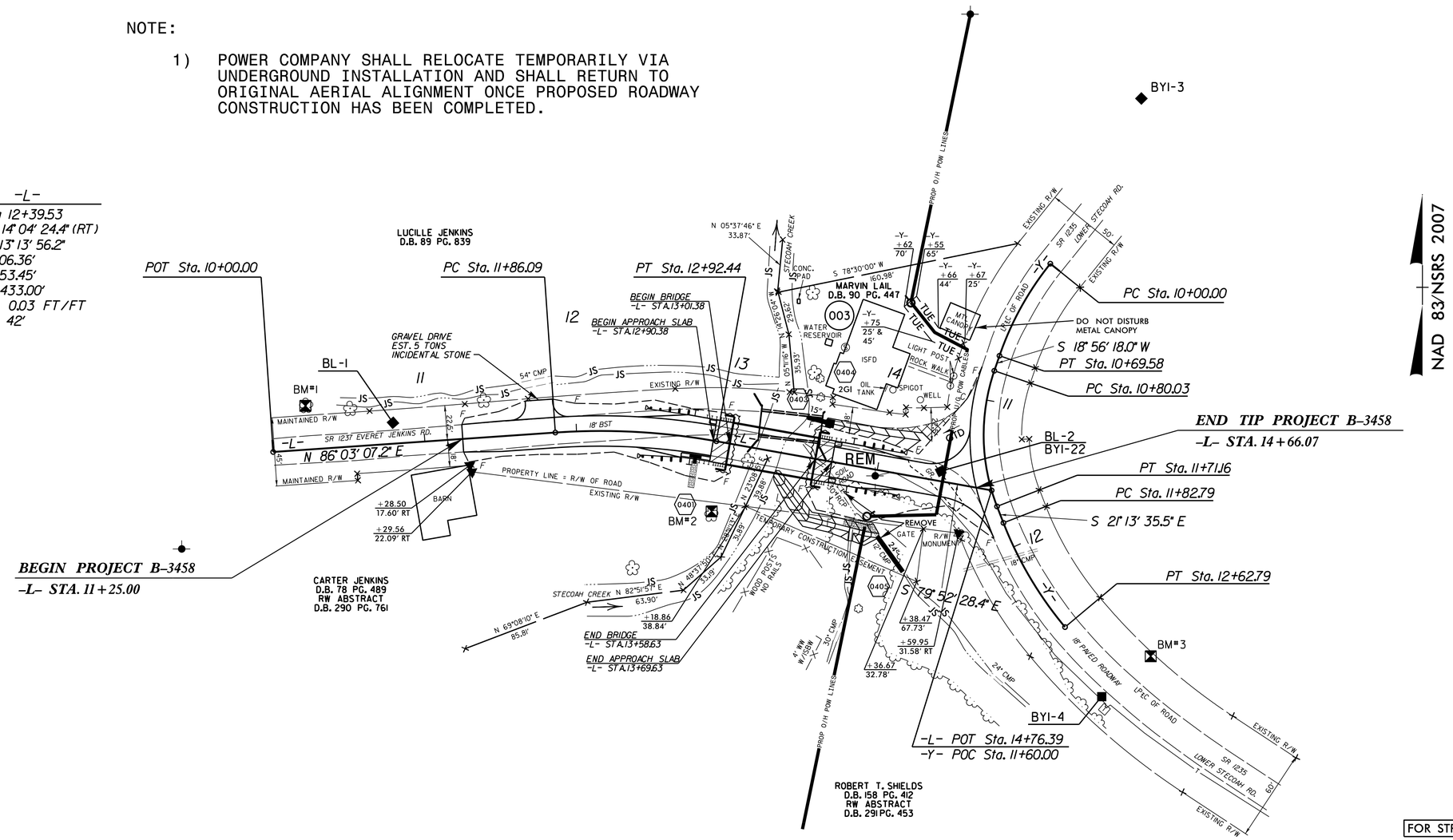

PROP. STEEL SHEET PILING (SEE STRUCTURE PLANS)

FOR STRUCTURE PLANS, SEE SHEET S-1 THRU S-18

MA Engineering CONSULTANTS, INC.
598 E. Chatham Street, Suite 137
Cary, N. C. 27511

5/14/99

7/2/2014
R:\Utilities\Proj\B3458_ut_rdy4_U02_psh.dgn

Approximate quantities only. Unclassified excavation, borrow excavation, fine grading, clearing and grubbing, and removal of existing pavement will be paid for at the lump sum price for Grading".

STATE OF NORTH CAROLINA
DIVISION OF HIGHWAYS

PROJ. REFERENCE NO.	SHEET NO.
B-3458	X-1A

CROSS-SECTION SUMMARY

Station L	Uncl. Exc. (cu. yd.)	Embt (cu. yd.)
11+25.00	0	0
11+50.00	10	1
11+75.00	11	1
12+00.00	11	2
12+25.00	10	3
12+50.00	7	5
12+75.00	3	11
13+00.00	0	30
13+01.38	0	3

Station L	Uncl. Exc. (cu. yd.)	Embt (cu. yd.)
13+58.63	0	0
13+75.00	2	142
14+00.00	7	162
14+25.00	12	82
14+50.00	21	17
14+66.00	9	0

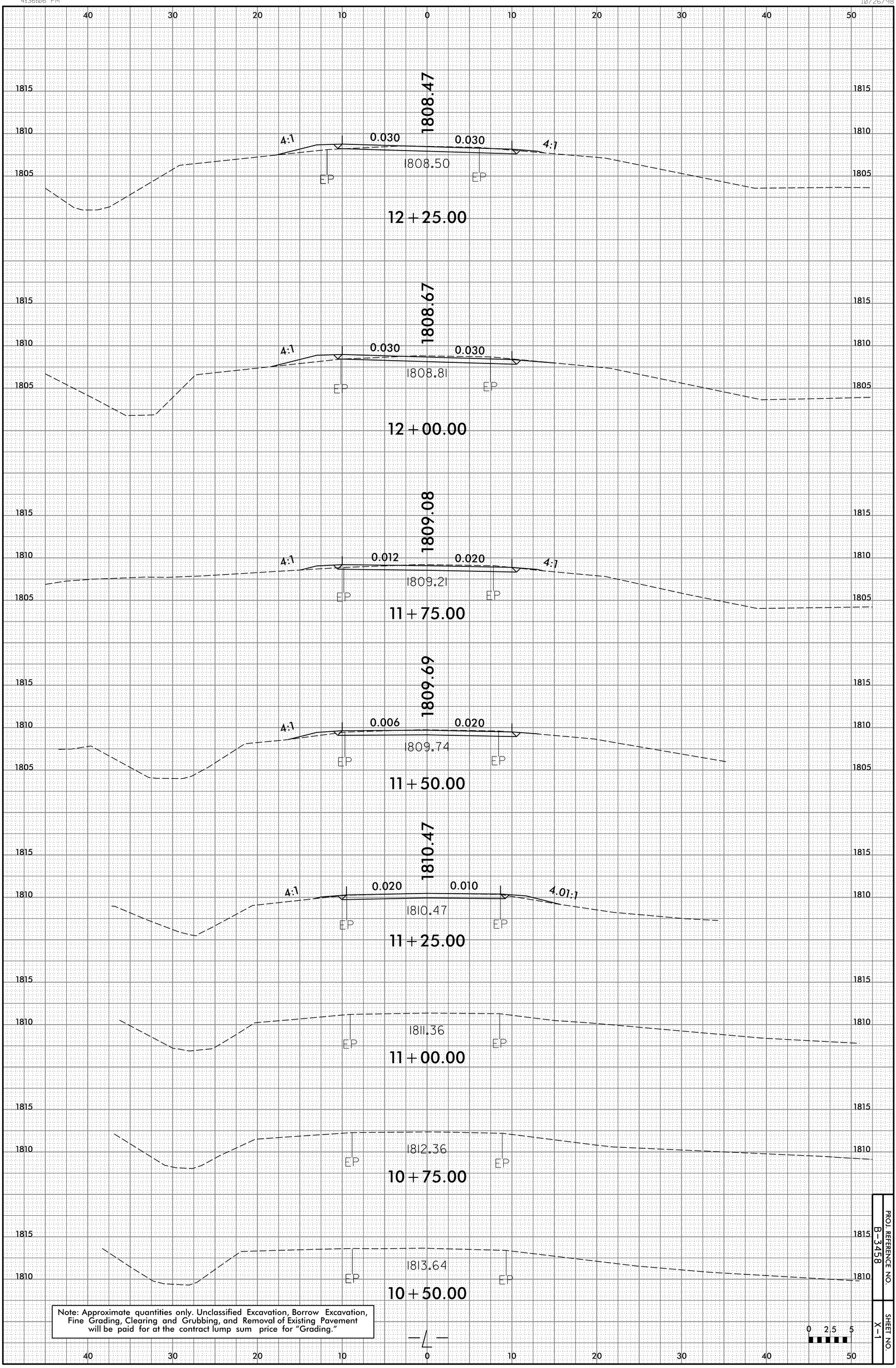

Note: Approximate quantities only. Unclassified Excavation, Borrow Excavation, Fine Grading, Clearing and Grubbing, and Removal of Existing Pavement will be paid for at the contract lump sum price for "Grading."

—L—

PROJ. REFERENCE NO.
B-3458

SHEET NO.
X-1

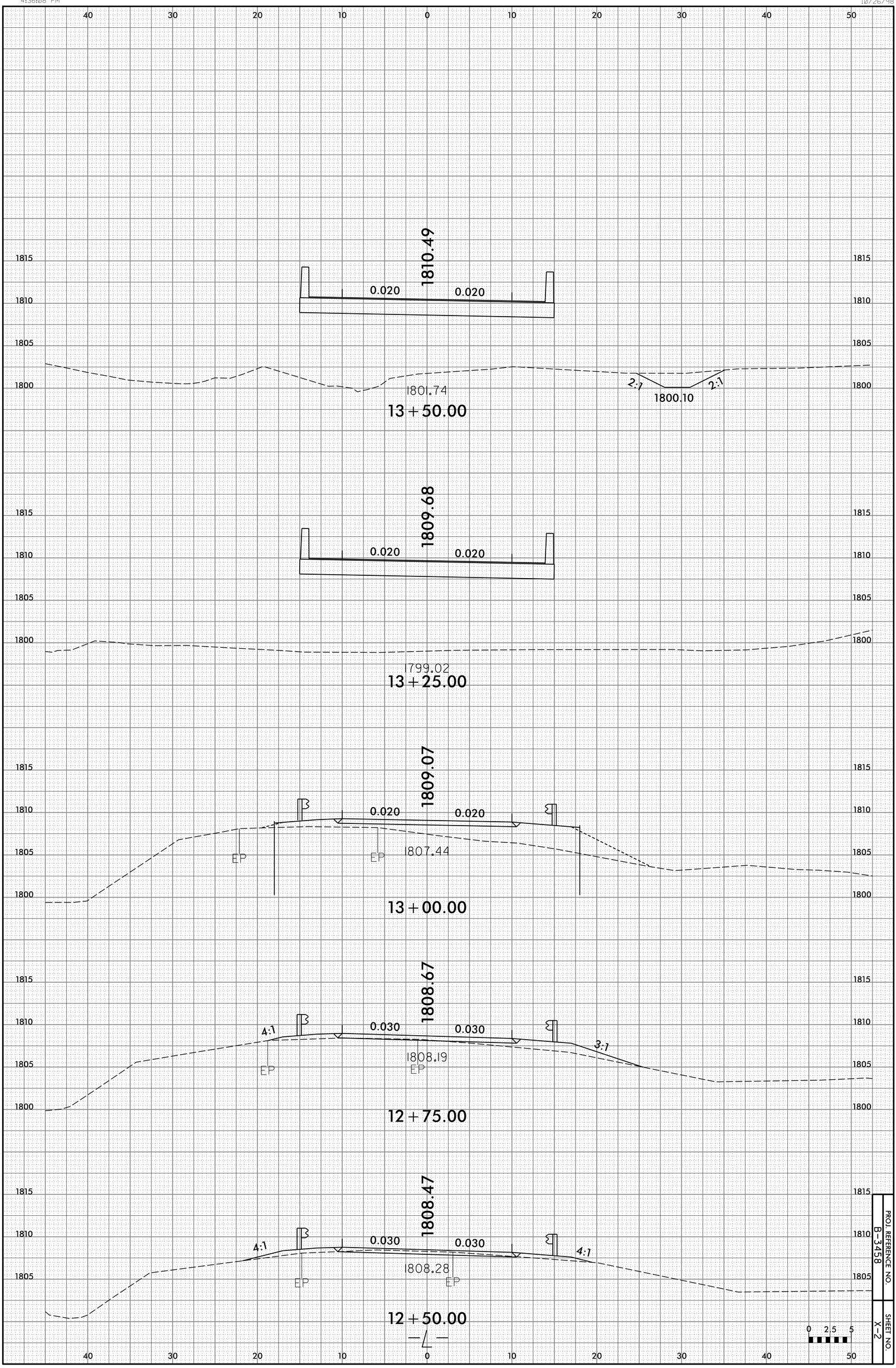

PROJ. REFERENCE NO.
B-3458
SHEET NO.
X-2

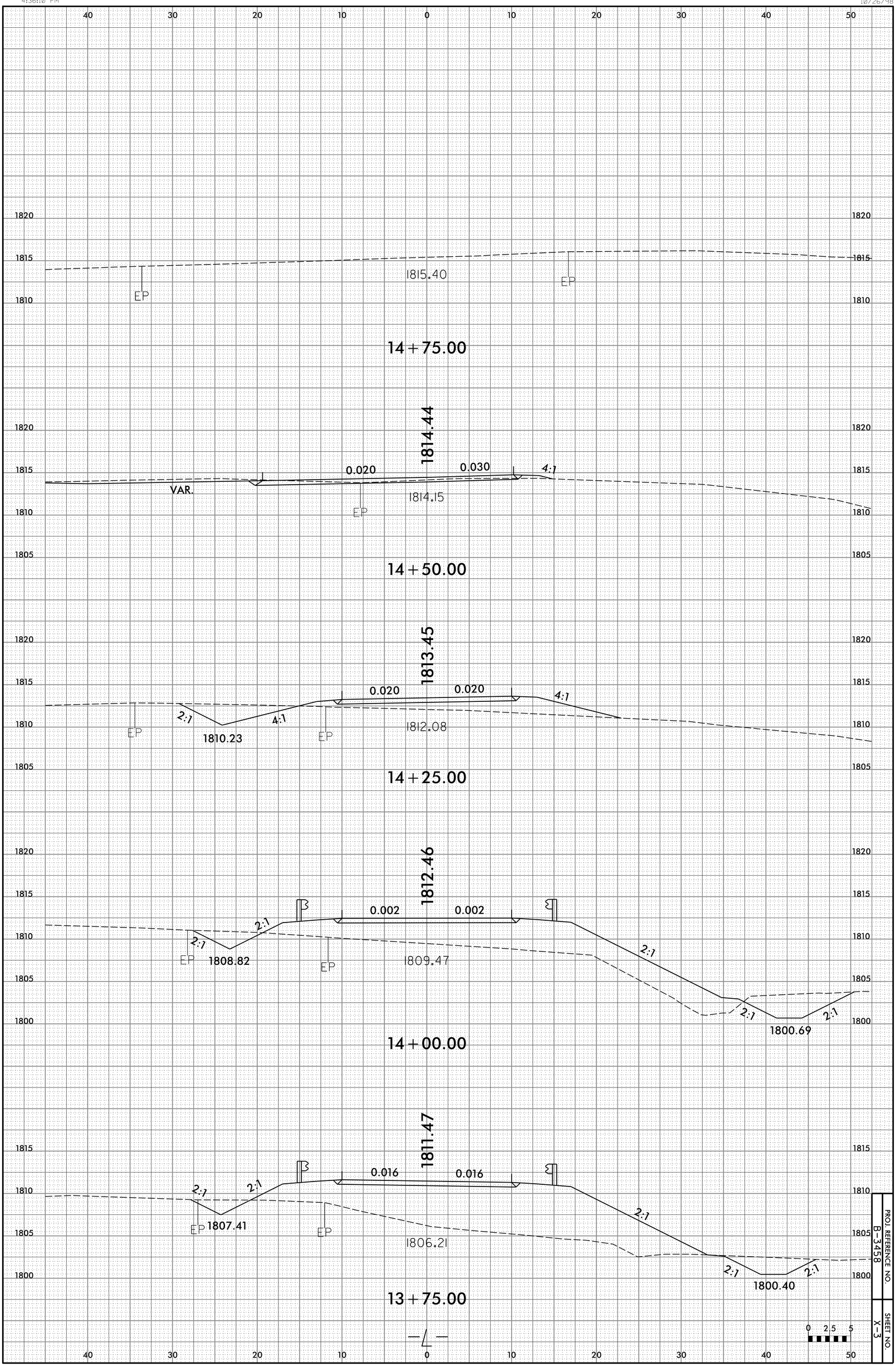

PROJ. REFERENCE NO.
B-3458

SHEET NO.
X-3

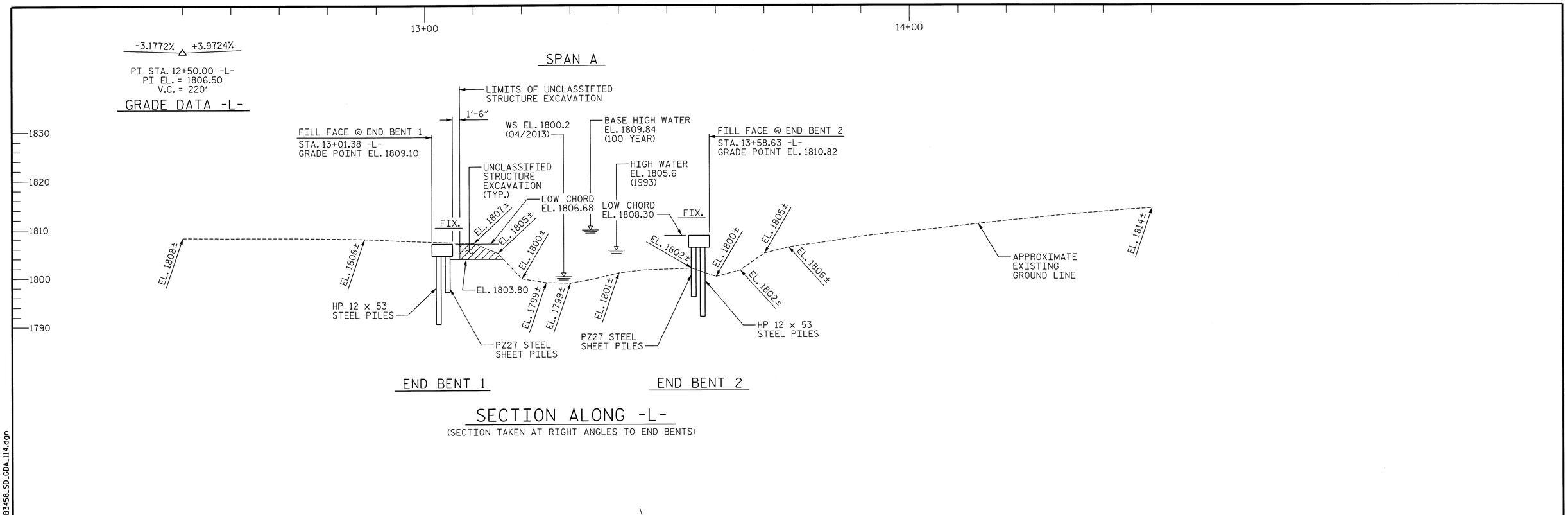

HORIZ. CURVE DATA -L-

PI STA. 12+39.53
Δ = 14°-04'-24.4" (RT.)
D = 13°-13'-56.2"
L = 106.36'
T = 53.45'
R = 433.00'

HYDROGRAPHIC DATA

DESIGN DISCHARGE ..... = 1500
FREQUENCY OF DESIGN FLOOD ..... = 10 YRS.
DESIGN HIGH WATER ELEVATION ..... = 1807.6 FT.
DRAINAGE AREA ..... = 9.10 SQ. MI.
BASE DISCHARGE (Q100) ..... = 2800 CFS
BASE HIGH WATER ELEVATION ..... = 1809.84 FT.

OVERTOPPING FLOOD DATA

OVERTOPPING DISCHARGE ..... = 1700 CFS
FREQUENCY OF OVERTOPPING FLOOD ..... = 10+ YRS.
OVERTOPPING FLOOD ELEVATION ..... = 1808.9 FT.

I HEREBY CERTIFY THESE PLANS ARE THE AS-BUILT PLANS

PROJECT NO. B-3458
GRAHAM COUNTY
STATION: 13+30.00 -L-

SHEET 1 OF 3 REPLACE BRIDGE NO. 114

STATE OF NORTH CAROLINA
DEPARTMENT OF TRANSPORTATION
RALEIGH

GENERAL DRAWING
FOR BRIDGE ON SR 1237
OVER STECOAH CREEK
AT SR 1236

NORTH CAROLINA PROFESSIONAL SEAL 24939 ENGINEER BYRON E. ATKINSON
3/27/14

MI ENGINEERING
1011 SCHAUB DRIVE, SUITE 100
RALEIGH, NC 27606
(919) 851-6606
FIRM PE NUMBER : P-0671

REVISIONS							SHEET NO.
NO.	BY:	DATE:	NO.	BY:	DATE:		S-1
1			3				TOTAL SHEETS
2			4				18

DRAWN BY :	B.E. LANNING	DATE :	03/14
CHECKED BY :	B.E. ATKINSON	DATE :	03/14
DESIGN ENGINEER OF RECORD :	B.E. ATKINSON	DATE :	03/14

3/27/2014
12:40:08 PM
User: blanning
Filename: P:\NC Bridges\MI3001 - Div 14 Bridge Replacements_MA Engr\MI3001.01_Graham 114\B-3458\Structures\B3458_SD_GDA_114.dgn

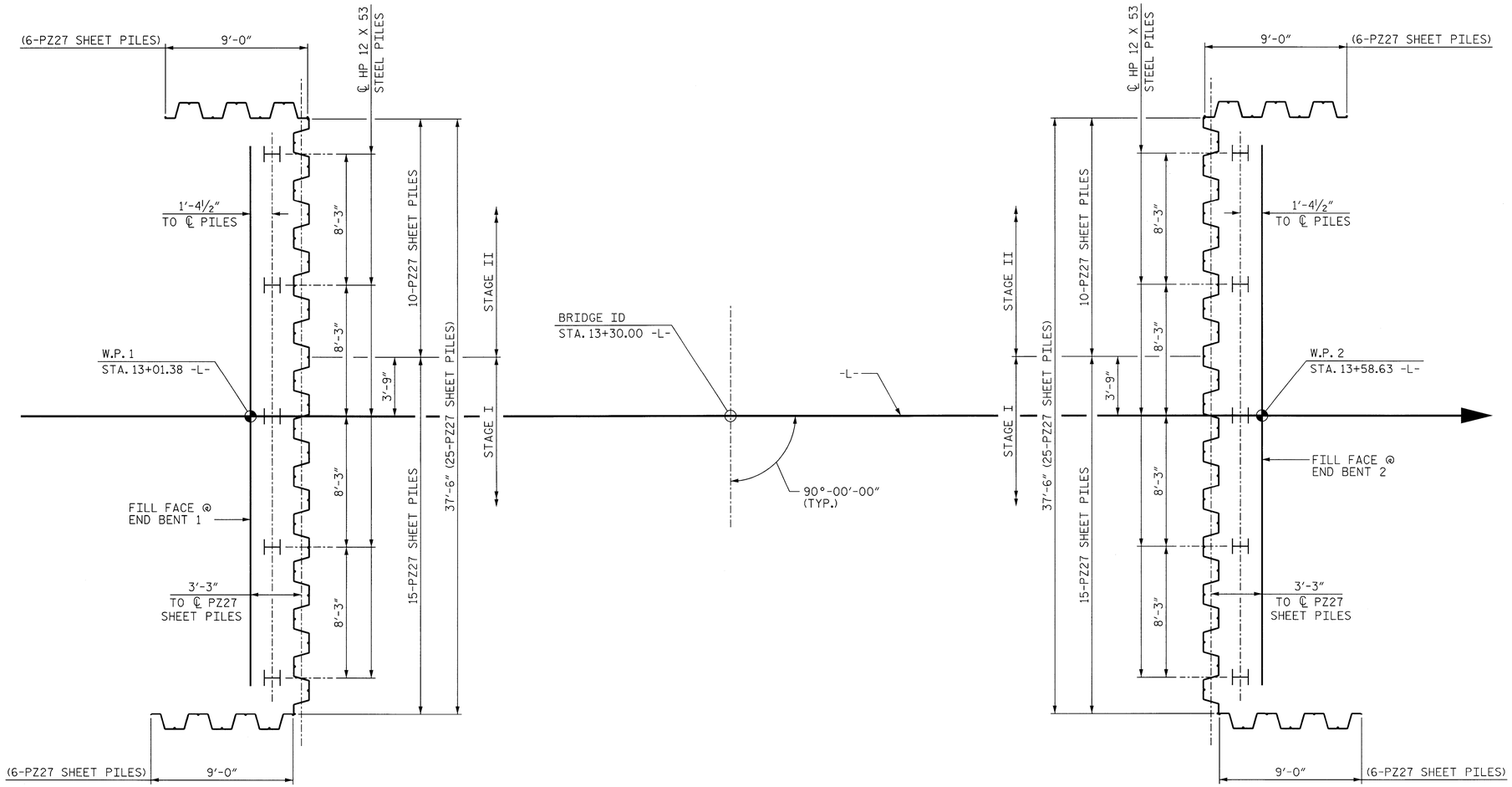

END BENT 1

END BENT 2

FOUNDATION LAYOUT

DIMENSIONS LOCATING STEEL PILES ARE TO THE PILE CENTERLINE AT BOTTOM OF CAP.

NOTES

FOR PILES, SEE SECTION 450 OF THE STANDARD SPECIFICATIONS.

PILES AT END BENTS 1 AND 2 ARE DESIGNED FOR A FACTORED RESISTANCE OF 85 TONS PER PILE. DRIVE PILES TO A REQUIRED DRIVING RESISTANCE OF 145 TONS PER PILE.

PILE EXCAVATION IS REQUIRED TO INSTALL PILES AT END BENT 1. EXCAVATE HOLES AT PILE LOCATIONS TO ELEVATION 1794 FT WITH PENETRATION OF AT LEAST 3 FEET INTO WEATHERED ROCK OR ROCK. FOR PILE EXCAVATION, SEE SECTION 450 OF THE STANDARD SPECIFICATIONS.

PILE EXCAVATION IS REQUIRED TO INSTALL PILES AT END BENT 2. EXCAVATE HOLES AT PILE LOCATIONS TO ELEVATION 1793 FT WITH PENETRATION OF AT LEAST 3 FEET INTO WEATHERED ROCK OR ROCK. FOR PILE EXCAVATION, SEE SECTION 450 OF THE STANDARD SPECIFICATIONS.

TESTING PILES WITH THE PDA DURING DRIVING, RESTRIKING, OR REDRIVING MAY BE REQUIRED. THE ENGINEER WILL DETERMINE THE NEED FOR PDA TESTING. FOR PDA SEE SECTION 450 OF THE STANDARD SPECIFICATIONS, AND FOR PILE DRIVING, CRITERIA, SEE PILE DRIVING CRITERIA PROVISION.

FOR STEEL SHEET PILES, SEE SECTION 1084 OF THE STANDARD SPECIFICATIONS.

PZ 27 SHEETING IS TO BE DRIVEN IN FRONT (STREAM SIDE) OF HP 12X53 AT END BENTS 1 AND 2 AS SHOWN IN STRUCTURE PLANS.

SHEET PILES SHOULD BE DRIVEN TO REFUSAL ON WEATHERED ROCK AT END BENTS 1 AND 2.

SHEET PILE ABUTMENTS WILL NOT WITHSTAND PROJECTED OVERTOPPING SCOUR.

PROJECT NO. B-3458
GRAHAM COUNTY
STATION: 13+30.00 -L-

SHEET 2 OF 3

STATE OF NORTH CAROLINA
DEPARTMENT OF TRANSPORTATION
RALEIGH

GENERAL DRAWING

FOR BRIDGE ON SR 1237
OVER STECOAH CREEK
AT SR 1236

NORTH CAROLINA PROFESSIONAL SEAL 24939 ENGINEER BYRON E. ATKINSON
6/04/14

MI ENGINEERING
1011 SCHAUB DRIVE, SUITE 100
RALEIGH, NC 27606
(919) 851-6606
FIRM PE NUMBER : P-0671

REVISIONS						
NO.	BY:	DATE:	NO.	BY:	DATE:	
1			3			
2			4			

SHEET NO. S-2
TOTAL SHEETS 18

DRAWN BY :	B.E. LANNING	DATE :	03/14
CHECKED BY :	B.E. ATKINSON	DATE :	03/14
DESIGN ENGINEER OF RECORD :	B.E. ATKINSON	DATE :	03/14

6/4/2014
11:05:24 AM
User: blanning
Filename: P:\NC Bridges\MI3001 - Div 14 Bridge Replacements_MA Engr\MI3001.01_Graham 114\B-3458\Structures\B3458_SD_GDB_114.dgn

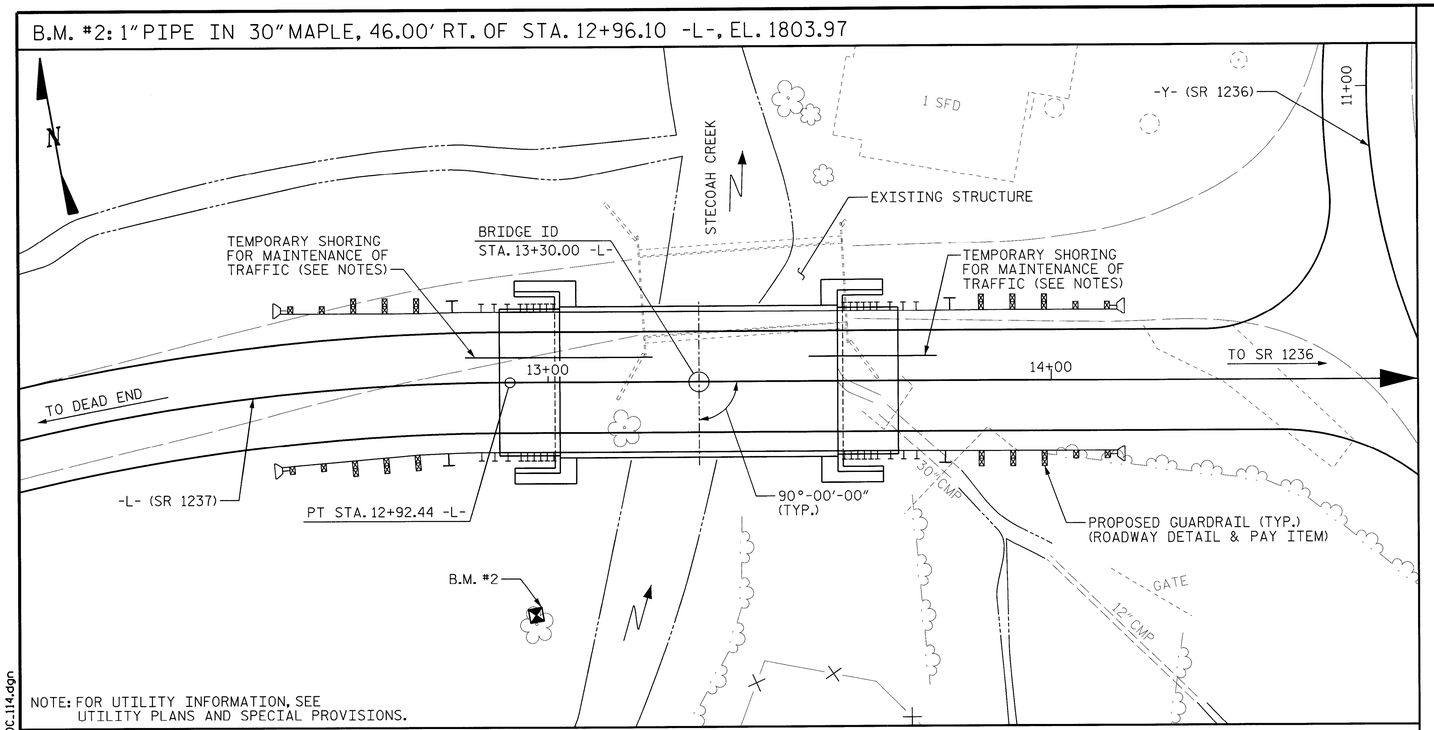

LOCATION SKETCH

NOTES

ASSUMED LIVE LOAD = HL-93 OR ALTERNATE LOADING.

FOR OTHER DESIGN DATA AND GENERAL NOTES, SEE SHEET SN.

FOR EROSION CONTROL MEASURES SEE EROSION CONTROL PLANS.

THIS BRIDGE HAS BEEN DESIGNED IN ACCORDANCE WITH THE REQUIREMENTS OF THE AASHTO LRFD BRIDGE DESIGN SPECIFICATIONS.

THIS BRIDGE IS LOCATED IN SEISMIC ZONE 1.

THE EXISTING STRUCTURE CONSISTING OF ONE SPAN @ 40'-8, WITH A ASPHALT WEARING SURFACE AND TIMBER FLOOR ON STEEL GIRDER FLOOR BEAM SYSTEM AND A CLEAR ROADWAY WIDTH OF 15'-10½" ON TIMBER CAP WITH TIMBER POST AND SILLS END BENTS AND LOCATED AT THE SITE OF THE PROPOSED STRUCTURE SHALL BE REMOVED.

REMOVAL OF THE EXISTING BRIDGE SHALL BE PERFORMED SO AS TO NOT ALLOW DEBRIS TO FALL INTO THE WATER. THE CONTRACTOR SHALL SUBMIT DEMOLITION PLANS FOR REVIEW AND REMOVE THE BRIDGE IN ACCORDANCE WITH ARTICLE 402-2 OF THE STANDARD SPECIFICATIONS.

THE MATERIAL SHOWN IN THE CROSS-HATCHED AREA SHALL BE EXCAVATED FOR A DISTANCE OF 30 FT. EACH SIDE OF THE CENTERLINE ROADWAY AS DIRECTED BY THE ENGINEER. THIS WORK WILL BE PAID FOR AT THE CONTRACT LUMP SUM PRICE FOR UNCLASSIFIED STRUCTURE EXCAVATION. SEE SECTION 412 OF THE STANDARD SPECIFICATIONS.

THE SUBSTRUCTURE OF THE EXISTING BRIDGE INDICATED ON THE PLANS IS FROM THE BEST INFORMATION AVAILABLE. THIS INFORMATION IS SHOWN FOR THE CONVENIENCE OF THE CONTRACTOR. THE CONTRACTOR SHALL HAVE NO CLAIM WHATSOEVER AGAINST THE DEPARTMENT OF TRANSPORTATION FOR ANY DELAYS OR ADDITIONAL COST INCURRED BASED ON THE DIFFERENCES BETWEEN THE EXISTING BRIDGE SUBSTRUCTURE SHOWN ON THE PLANS AND THE ACTUAL CONDITIONS AT THE PROJECT SITE.

ASPHALT WEARING SURFACE IS INCLUDED IN THE ROADWAY QUANTITY. SEE ROADWAY QUANTITIES.

THIS STRUCTURE HAS BEEN DESIGNED IN ACCORDANCE WITH "HEC 18 - EVALUATING SCOUR AT BRIDGES".

INASMUCH AS THE PAINT SYSTEM ON THE EXISTING STRUCTURAL STEEL CONTAINS LEAD, THE CONTRACTOR'S ATTENTION IS DIRECTED TO ARTICLE 107-1 OF THE STANDARD SPECIFICATIONS. ANY COSTS RESULTING FROM COMPLIANCE WITH APPLICABLE STATE OR FEDERAL REGULATIONS PERTAINING TO HANDLING OF MATERIALS CONTAINING LEAD BASED PAINT SHALL BE INCLUDED IN THE BID PRICE FOR "REMOVAL OF EXISTING STRUCTURE AT STATION 13+30.00 -L-."

FOR FORMWORK AND FALSEWORK, SEE SPECIAL PROVISIONS.

FOR SUBMITTAL OF WORKING DRAWINGS, SEE SPECIAL PROVISIONS.

FOR CRANE SAFETY, SEE SPECIAL PROVISIONS.

FOR GROUT FOR STRUCTURES, SEE SPECIAL PROVISIONS.

FOR LIMITS OF TEMPORARY SHORING FOR MAINTENANCE OF TRAFFIC, SEE TRAFFIC CONTROL PLANS. FOR PAY ITEM FOR TEMPORARY SHORING FOR MAINTENANCE OF TRAFFIC, SEE ROADWAY PLANS.

TOTAL BILL OF MATERIAL

	REMOVAL OF EXISTING STRUCTURE	PILE EXACAVATION IN SOIL	PILE EXACAVATION NOT IN SOIL	PDA TESTING	UNCLASSIFIED STRUCTURE EXCAVATION	CLASS A CONCRETE	BRIDGE APPROACH SLABS	REINFORCING STEEL	HP 12 X 53 STEEL PILES		VERTICAL CONCRETE BARRIER RAIL	ELASTOMERIC BEARINGS	3'-0" x 1'-9" PRESTRESSED CONCRETE CORED SLABS		18" STEEL SHEET PILES
	LUMP SUM	LIN. FT.	LIN. FT.	EACH	LUMP SUM	CU. YDS.	LUMP SUM	LBS.	NO.	LIN. FT.	LIN. FT.	LUMP SUM	NO.	LIN. FT.	SQ. FT.
SUPERSTRUCTURE							LUMP SUM				110.25	LUMP SUM	10	550	
END BENT 1		50	15		LUMP SUM	21.6		2500	5	75					464
END BENT 2		50	15			21.6		2500	5	75					610
TOTAL	LUMP SUM	100	30	1	LUMP SUM	43.2	LUMP SUM	5000	10	150	110.25	LUMP SUM	10	550	1074

PROJECT NO. B-3458
GRAHAM COUNTY
STATION: 13+30.00 -L-

SHEET 3 OF 3

STATE OF NORTH CAROLINA
DEPARTMENT OF TRANSPORTATION
RALEIGH

GENERAL DRAWING
FOR BRIDGE ON SR 1237
OVER STECOAH CREEK
AT SR 1236

NORTH CAROLINA PROFESSIONAL SEAL 24939 ENGINEER BYRON E. ATKINSON
3/27/14

MI ENGINEERING
1011 SCHAUB DRIVE, SUITE 100
RALEIGH, NC 27606
(919) 851-6606
FIRM PE NUMBER : P-0671

REVISIONS						SHEET NO.
NO.	BY:	DATE:	NO.	BY:	DATE:	S-3
1			3			TOTAL SHEETS
2			4			18

DRAWN BY : B.E. LANNING DATE : 03/14
CHECKED BY : B.E. ATKINSON DATE : 03/14
DESIGN ENGINEER OF RECORD : B.E. ATKINSON DATE : 03/14

3/27/2014
12:41:26 PM
User: blanning
Filename: P:\NC Bridges\MI3001 - Div 14 Bridge Replacements,MA Engr\MI3001.01.Graham 114\B-3458\Structures\B3458_SD_GDC_114.dgn

LOAD AND RESISTANCE FACTOR RATING (LRFD) SUMMARY FOR PRESTRESSED CONCRETE GIRDERS

LEVEL		VEHICLE	WEIGHT (W) (TONS)	CONTROLLING LOAD RATING	MINIMUM RATING FACTORS (RF)	TONS = W X RF	STRENGTH I LIMIT STATE											SERVICE III LIMIT STATE						COMMENT NUMBER
								MOMENT					SHEAR						MOMENT					
							LIVELOAD FACTORS	DISTRIBUTION FACTORS (DF)	RATING FACTOR	SPAN	GIRDER LOCATION	DISTANCE FROM LEFT END OF SPAN (ft)	DISTRIBUTION FACTORS (DF)	RATING FACTOR	SPAN	GIRDER LOCATION	DISTANCE FROM LEFT END OF SPAN (ft)	LIVELOAD FACTORS	DISTRIBUTION FACTORS (DF)	RATING FACTOR	SPAN	GIRDER LOCATION	DISTANCE FROM LEFT END OF SPAN (ft)	
DESIGN LOAD RATING		HL-93(Inv)	N/A	1	1.055	--	1.75	0.275	1.23	55′	EL	27	0.523	1.23	55′	EL	5.4	0.80	0.275	**1.05**	55′	EL	**27**	
		HL-93(Opr)	N/A	--	1.591	--	1.35	0.275	1.59	55′	EL	27	0.523	1.59	55′	EL	5.4	N/A	--	--	--	--	--	
		HS-20(Inv)	36.000	2	1.322	47.585	1.75	0.275	1.54	55′	EL	27	0.523	1.47	55′	EL	5.4	0.80	0.275	**1.32**	55′	EL	**27**	
		HS-20(Opr)	36.000	--	1.9	68.396	1.35	0.275	1.99	55′	EL	27	0.523	1.9	55′	EL	5.4	N/A	--	--	--	--	--	
LEGAL LOAD RATING	SV	SNSH	13.500	--	2.776	37.476	1.4	0.275	4.04	55′	EL	27	0.523	4.17	55′	EL	5.4	0.80	0.275	2.78	55′	EL	27	
		SNGARBS2	20.000	--	2.155	43.095	1.4	0.275	3.14	55′	EL	27	0.523	3.02	55′	EL	5.4	0.80	0.275	2.15	55′	EL	27	
		SNAGRIS2	22.000	--	2.079	45.734	1.4	0.275	3.03	55′	EL	27	0.523	2.83	55′	EL	5.4	0.80	0.275	2.08	55′	EL	27	
		SNCOTTS3	27.250	--	1.384	37.708	1.4	0.275	2.01	55′	EL	27	0.523	2.09	55′	EL	5.4	0.80	0.275	1.38	55′	EL	27	
		SNAGGRS4	34.925	--	1.189	41.527	1.4	0.275	1.73	55′	EL	27	0.523	1.77	55′	EL	5.4	0.80	0.275	1.19	55′	EL	27	
		SNS5A	35.550	--	1.16	41.255	1.4	0.275	1.69	55′	EL	27	0.523	1.82	55′	EL	5.4	0.80	0.275	1.16	55′	EL	27	
		SNS6A	39.950	--	1.079	43.102	1.4	0.275	1.57	55′	EL	27	0.523	1.68	55′	EL	5.4	0.80	0.275	1.08	55′	EL	27	
		SNS7B	42.000	--	1.028	43.175	1.4	0.275	1.5	55′	EL	27	0.523	1.67	55′	EL	5.4	0.80	0.275	1.03	55′	EL	27	
	TTST	TNAGRIT3	33.000	--	1.32	43.556	1.4	0.275	1.92	55′	EL	27	0.523	1.98	55′	EL	5.4	0.80	0.275	1.32	55′	EL	27	
		TNT4A	33.075	--	1.33	43.979	1.4	0.275	1.94	55′	EL	27	0.523	1.91	55′	EL	5.4	0.80	0.275	1.33	55′	EL	27	
		TNT6A	41.600	--	1.101	45.811	1.4	0.275	1.6	55′	EL	27	0.523	1.83	55′	EL	5.4	0.80	0.275	1.10	55′	EL	27	
		TNT7A	42.000	--	1.114	46.804	1.4	0.275	1.62	55′	EL	27	0.523	1.71	55′	EL	5.4	0.80	0.275	1.11	55′	EL	27	
		TNT7B	42.000	--	1.163	48.848	1.4	0.275	1.69	55′	EL	27	0.523	1.62	55′	EL	5.4	0.80	0.275	1.16	55′	EL	27	
		TNAGRIT4	43.000	--	1.101	47.33	1.4	0.275	1.6	55′	EL	27	0.523	1.56	55′	EL	5.4	0.80	0.275	1.10	55′	EL	27	
		TNAGT5A	45.000	--	1.031	46.405	1.4	0.275	1.5	55′	EL	27	0.523	1.58	55′	EL	5.4	0.80	0.275	1.03	55′	EL	27	
		TNAGT5B	45.000	3	1.013	45.582	1.4	0.275	1.47	55′	EL	27	0.523	1.48	55′	EL	5.4	0.80	0.275	**1.01**	55′	EL	**27**	

LOAD FACTORS:

DESIGN LOAD RATING FACTORS	LIMIT STATE	γ_{DC}	γ_{DW}
	STRENGTH I	1.25	1.50
	SERVICE III	1.00	1.00

NOTES:

MINIMUM RATING FACTORS ARE BASED ON THE STRENGTH I AND SERVICE III LIMIT STATES.

ALLOWABLE STRESSES FOR SERVICE III LIMIT STATE ARE AS REQUIRED FOR DESIGN.

COMMENTS:

1.
2.
3.
4.

(#) CONTROLLING LOAD RATING

(1) DESIGN LOAD RATING (HL-93)

(2) DESIGN LOAD RATING (HS-20)

(3) LEGAL LOAD RATING **

** SEE CHART FOR VEHICLE TYPE

GIRDER LOCATION

I - INTERIOR GIRDER
EL - EXTERIOR LEFT GIRDER
ER - EXTERIOR RIGHT GIRDER

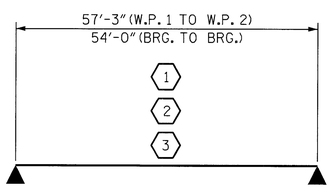

LRFR SUMMARY
FOR SPAN 'A'

PROJECT NO. B-3458
GRAHAM COUNTY
STATION: 13+30.00 -L-

STATE OF NORTH CAROLINA
DEPARTMENT OF TRANSPORTATION
RALEIGH

STANDARD
LRFR SUMMARY FOR 55′ CORED SLAB UNIT 90° SKEW
(NON-INTERSTATE TRAFFIC)

NORTH CAROLINA PROFESSIONAL SEAL 24939 ENGINEER BYRON E. ATKINSON 3/27/14

MI ENGINEERING
1011 SCHAUB DRIVE, SUITE 100
RALEIGH, NC 27606
(919) 851-6606
FIRM PE NUMBER : P-0671

REVISIONS						SHEET NO.
NO.	BY:	DATE:	NO.	BY:	DATE:	S-4
1			3			TOTAL SHEETS
2			4			18

ASSEMBLED BY:	B.E. LANNING	DATE: 03/14
CHECKED BY :	B.E. ATKINSON	DATE: 03/14
DESIGN ENGINEER OF RECORD:	B.E. ATKINSON	DATE: 03/14
DRAWN BY : CVC 6/10		
CHECKED BY : DNS 6/10		

3/27/2014
12:44:46 PM
User: blanning
Filename: P:\NC Bridges\MI3001 - Div 14 Bridge Replacements_MA Engr\MI3001.01_Graham 114\B-3458\Structures\B3458_SD_LRFR1_114.dgn

STD. NO. 21LRFR1_90S_55L

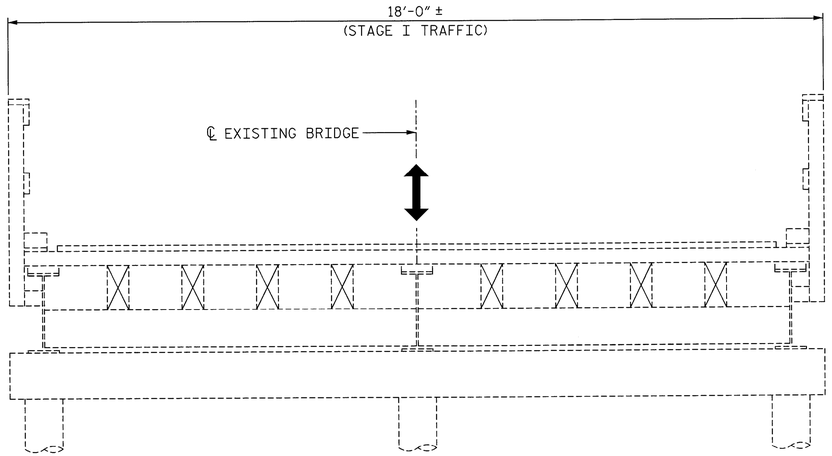

EXISTING BRIDGE

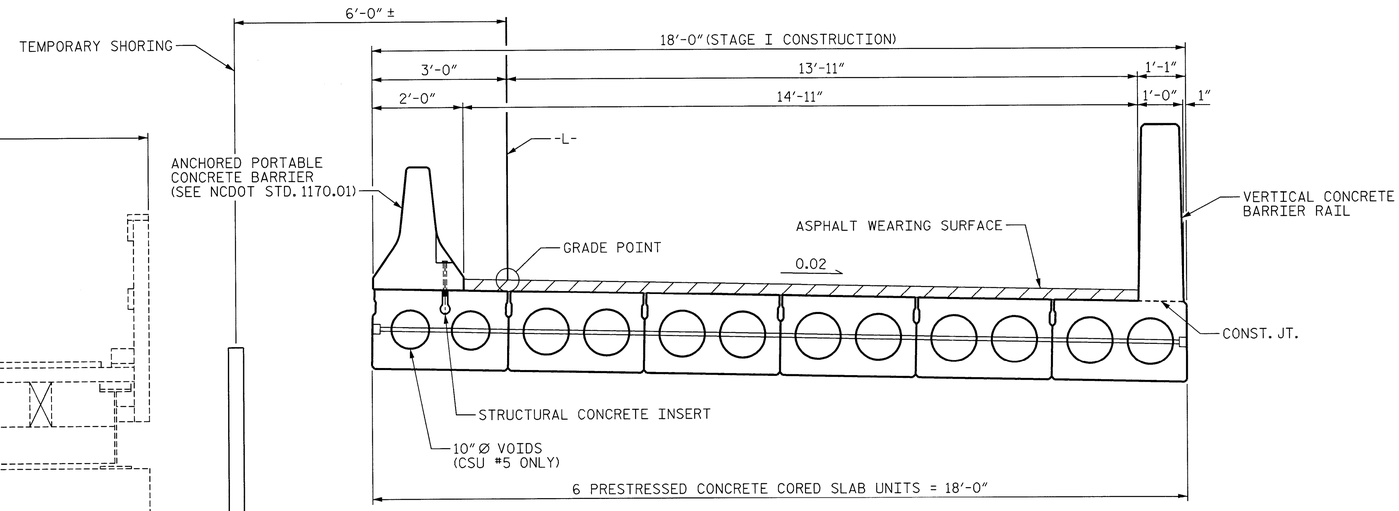

STAGE I CONSTRUCTION

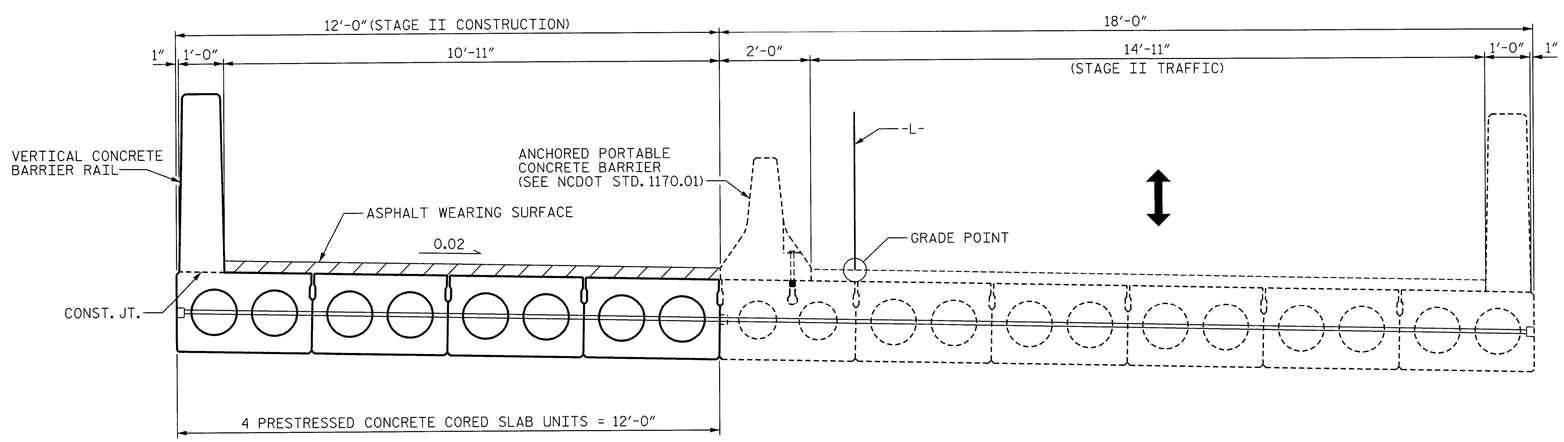

STAGE II CONSTRUCTION

PROJECT NO. B-3458

GRAHAM COUNTY

STATION: 13+30.00 -L-

STATE OF NORTH CAROLINA
DEPARTMENT OF TRANSPORTATION
RALEIGH

CONSTRUCTION SEQUENCE

NORTH CAROLINA PROFESSIONAL SEAL 24939 ENGINEER BYRON E. ATKINSON
3/27/14

MI ENGINEERING
1011 SCHAUB DRIVE, SUITE 100
RALEIGH, NC 27606
(919) 851-6606
FIRM PE NUMBER : P-0671

REVISIONS						SHEET NO.
NO.	BY:	DATE:	NO.	BY:	DATE:	S-5
1			3			TOTAL SHEETS
2			4			18

DRAWN BY :	B.E. LANNING	DATE :	03/14
CHECKED BY :	B.E. ATKINSON	DATE :	03/14
DESIGN ENGINEER OF RECORD :	B.E. ATKINSON	DATE :	03/14

3/27/2014
12:45:15 PM
User: blanning
Filename: P:\NC Bridges\WI3001 - Div 14 Bridge Replacements_MA Engr\WI3001.01_Graham 114\B-3458\Structures\B3458_SD_CSS_114.dgn

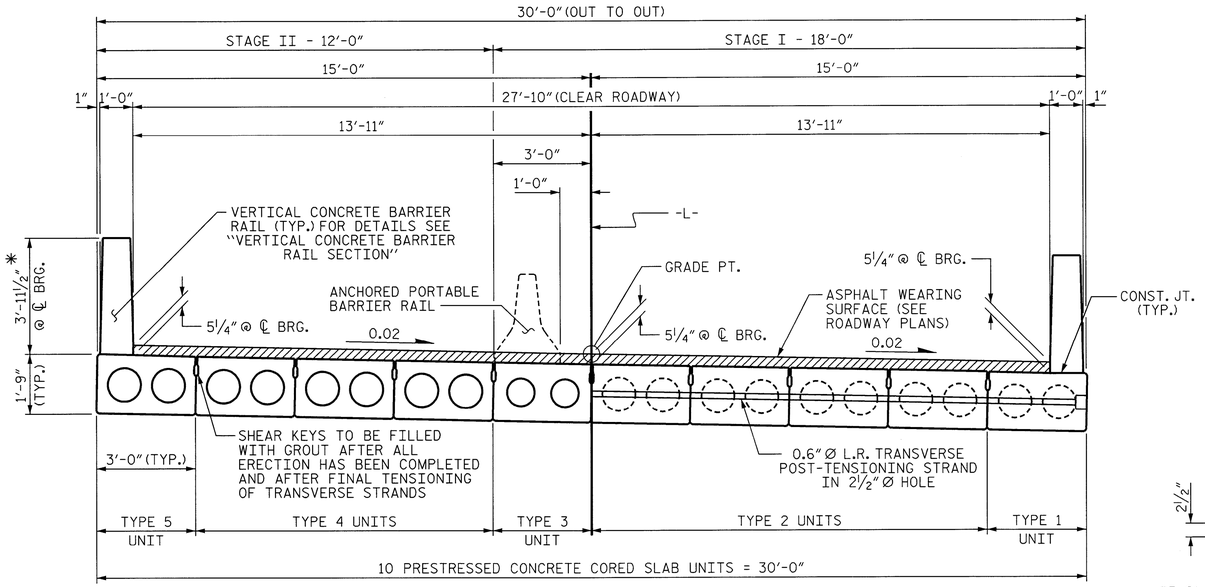

HALF SECTION
THROUGH VOIDS

HALF SECTION
AT INTERMEDIATE DIAPHRAGMS

TYPICAL SECTION

* - THE MAXIMUM BARRIER RAIL HEIGHT AND ASPHALT THICKNESS IS SHOWN. THE HEIGHT OF THE BARRIER RAIL AND ASPHALT THICKNESS VARIES WHILE THE TOP OF THE BARRIER RAIL FOLLOWS THE PROFILE OF THE GUTTERLINE. FOR RAIL HEIGHT DETAILS AND ASPHALT THICKNESS SEE THE "VERTICAL CONCRETE BARRIER RAIL SECTION" DETAIL.

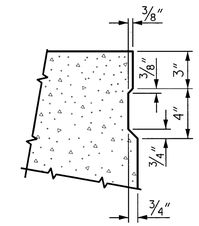

SHEAR KEY DETAIL

NOTE: OMIT SHEAR KEY ON OUTSIDE FACE OF EXTERIOR CORED SLABS.

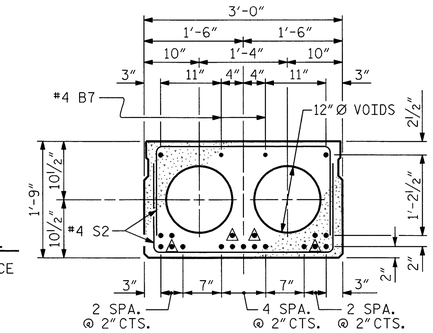

TYPE 2 & 4 UNITS
(19 STRANDS REQUIRED)

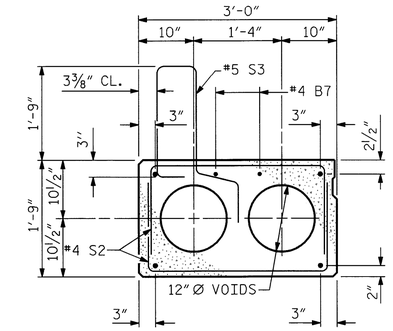

TYPE 1 & 5 UNITS
(FOR PRESTRESSED STRAND LAYOUT, SEE TYPE 2 & 4 UNITS)

DEBONDING LEGEND

◬ BOND SHALL BE BROKEN ON THESE STRANDS FOR A DISTANCE OF 6'-0" FROM END OF CORED SLAB UNIT. SEE STANDARD SPECIFICATIONS, ARTICLE 1078-7.

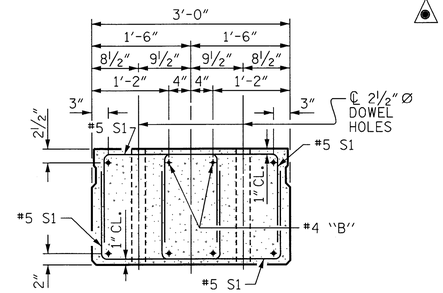

END ELEVATION

SHOWING PLACEMENT OF DOUBLE STIRRUPS AND LOCATION OF DOWEL HOLES. (STRAND LAYOUT NOT SHOWN.) INTERIOR SLAB UNIT SHOWN-EXTERIOR SLAB UNIT SIMILAR EXCEPT SHEAR KEY LOCATION.

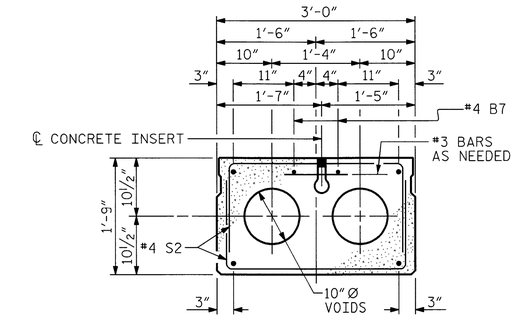

TYPE 3 UNIT
(FOR PRESTRESSED STRAND LAYOUT, SEE TYPE 2 & 4 UNITS)
(FOR LOCATION OF CONCRETE INSERTS, SEE "ANCHORED PORTABLE CONCRETE BARRIER RAIL DETAILS" SHEET)

0.6" Ø LOW RELAXATION STRAND LAYOUT

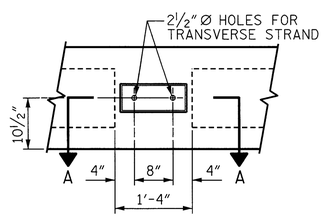

ELEVATION VIEW A

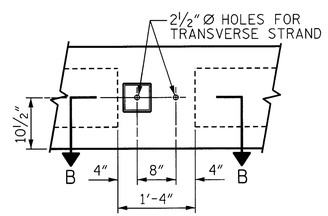

ELEVATION VIEW B

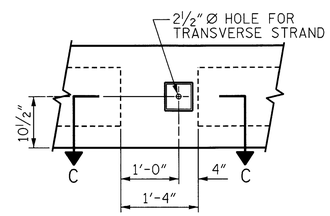

ELEVATION VIEW C

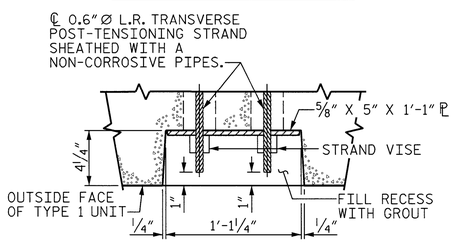

SECTION A-A
TYPE 1 UNIT

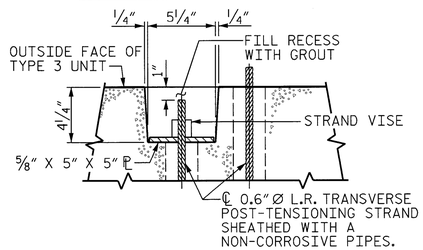

SECTION B-B
TYPE 3 UNIT

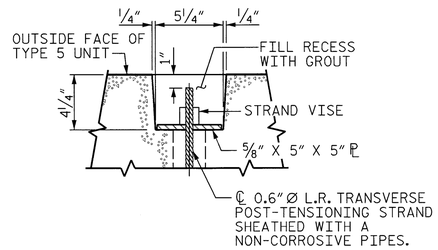

SECTION C-C
TYPE 5 UNIT

GROUTED RECESS AT END OF POST-TENSIONED STRAND OF CORED SLABS

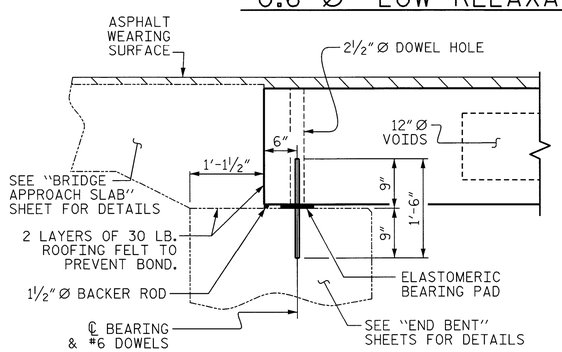

SECTION AT END BENT

PROJECT NO. B-3458
GRAHAM COUNTY
STATION: 13+30.00 -L-

SHEET 1 OF 4

STATE OF NORTH CAROLINA
DEPARTMENT OF TRANSPORTATION
RALEIGH

SUPERSTRUCTURE

3'-0" x 1'-9" PRESTRESSED CONCRETE CORED SLAB UNIT 90° SKEW

NORTH CAROLINA PROFESSIONAL SEAL 24939 ENGINEER BYRON E. ATKINSON
3/27/14

MI ENGINEERING
1011 SCHAUB DRIVE, SUITE 100
RALEIGH, NC 27606
(919) 851-6606
FIRM PE NUMBER : P-0671

REVISIONS						
NO.	BY:	DATE:	NO.	BY:	DATE:	
1			3			
2			4			

SHEET NO. S-6
TOTAL SHEETS 18

DRAWN BY : B.E. LANNING DATE : 03/14
CHECKED BY : B.E. ATKINSON DATE : 03/14
DESIGN ENGINEER OF RECORD : B.E. ATKINSON DATE : 03/14

3/27/2014
12:45:38 PM
User: blanning
Filename: P:\NC Bridges\MI3001 - Div 14 Bridge Replacements_MA Engr\MI3001.01_Graham 114\B-3458\Structures\B3458_SD_CSUI_114.dgn

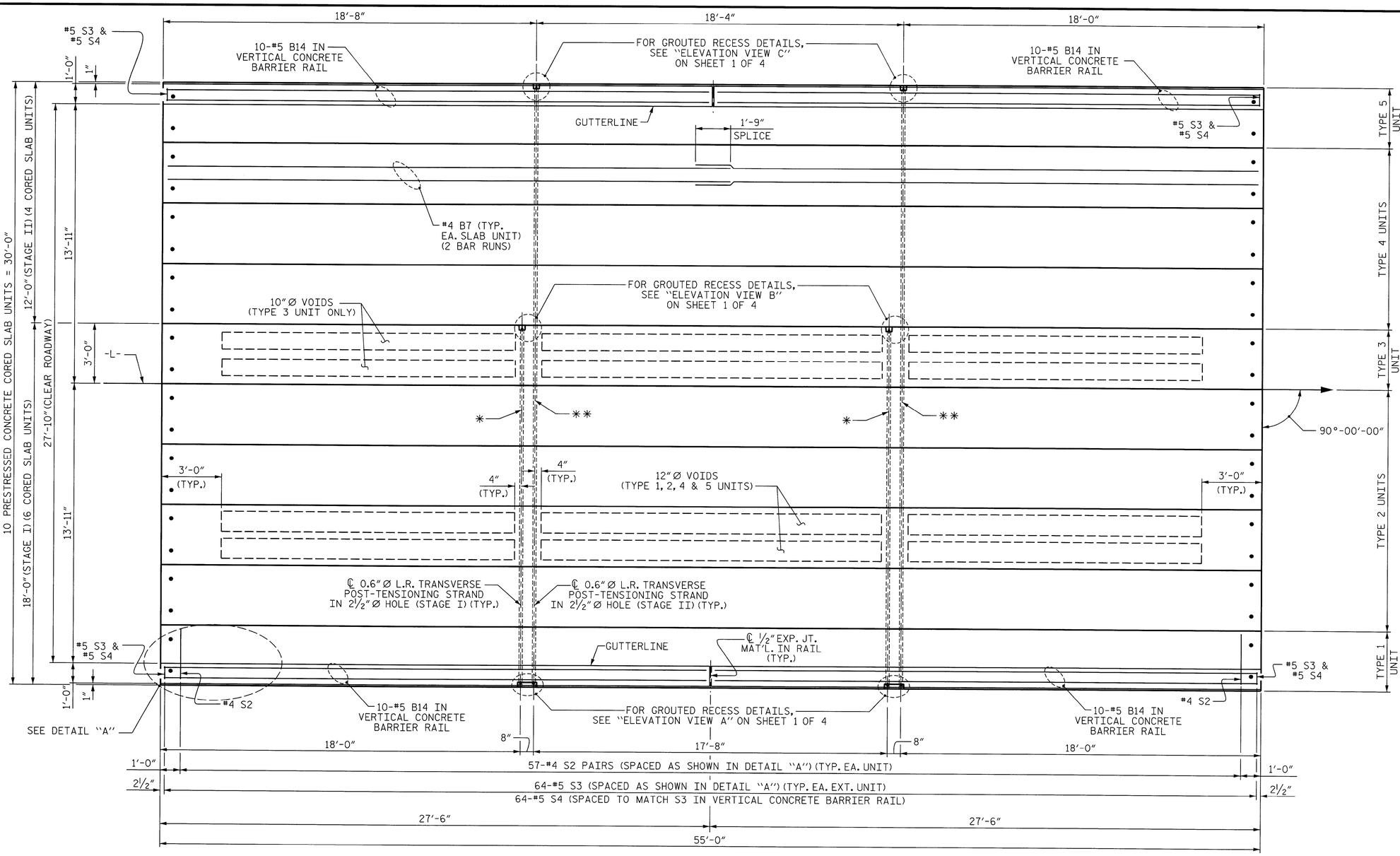

PLAN OF UNIT

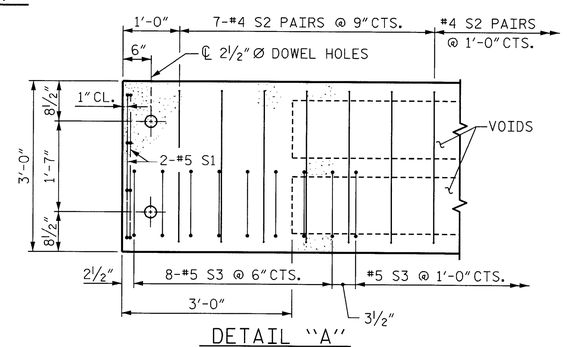

DETAIL "A"

EXTERIOR UNIT SHOWN - INTERIOR UNIT SIMILAR EXCEPT OMIT #5 S3 BARS.

NOTES

#4 S2 BARS MAY BE SHIFTED AS NECESSARY TO MAINTAIN 1" CLEAR TO GROUTED RECESS AND 2½" Ø TRANSVERSE POST-TENSIONING STRAND HOLES.

* STRAND GOES THROUGH 6 CORED SLAB UNITS (TO BE TENSIONED DURING STAGE I CONSTRUCTION).

** STRAND GOES THROUGH ALL CORED SLAB UNITS (TO BE TENSIONED DURING STAGE II CONSTRUCTION).

PROJECT NO. B-3458

GRAHAM COUNTY

STATION: 13+30.00 -L-

SHEET 2 OF 4

STATE OF NORTH CAROLINA
DEPARTMENT OF TRANSPORTATION
RALEIGH

SUPERSTRUCTURE

PLAN OF 55' UNIT
27'-10" CLEAR ROADWAY
90° SKEW

NORTH CAROLINA PROFESSIONAL SEAL 24939 ENGINEER BYRON E. ATKINSON 3/27/14

DRAWN BY :	B.E. LANNING	DATE :	03/14
CHECKED BY :	B.E. ATKINSON	DATE :	03/14
DESIGN ENGINEER OF RECORD :	B.E. ATKINSON	DATE :	03/14

MI ENGINEERING
1011 SCHAUB DRIVE, SUITE 100
RALEIGH, NC 27606
(919) 851-6606
FIRM PE NUMBER : P-0671

REVISIONS						
NO.	BY:	DATE:	NO.	BY:	DATE:	
1			3			
2			4			

SHEET NO. S-7
TOTAL SHEETS 18

3/27/2014
12:46:01 PM
User: blanning
Filename: P:\NC Bridges\MI3001 - Div 14 Bridge Replacements_MA Engr\MI3001.01_Graham 114\B-3458\Structures\B3458_SD_CSU2_114.dgn

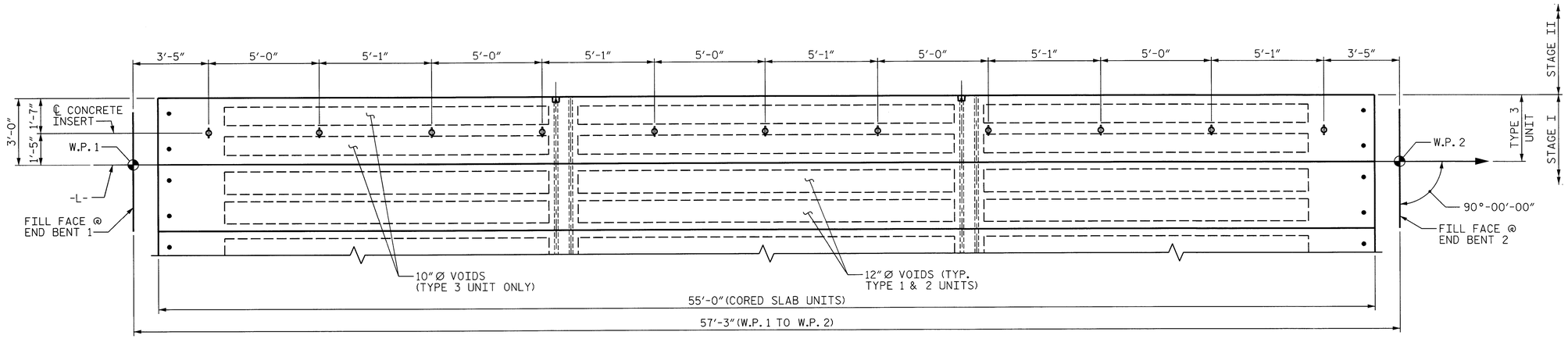

CONCRETE INSERT SPACING FOR ANCHORED PORTABLE CONCRETE BARRIER - STAGE I

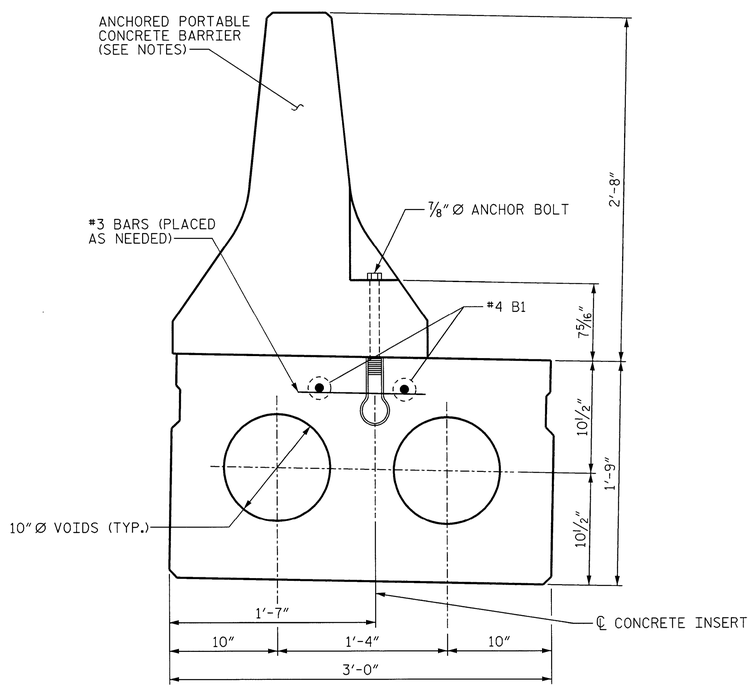

CONCRETE INSET LOCATION

(TYPE 3 UNIT, STAGE I)

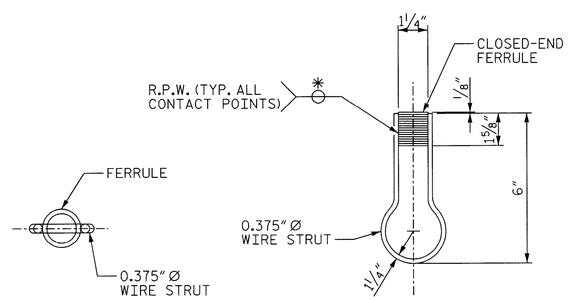

STRUCTURAL CONCRETE INSERT

* EACH WELDED ATTACHMENT OF WIRE TO FERRULE SHALL DEVELOP THE TENSILE STRENGTH OF THE WIRE.

NOTES

THE STRUCTURAL CONCRETE INSERT ASSEMBLY SHALL CONSIST OF THE FOLLOWING COMPONENTS:

A. FERRULES SHALL BE MADE FROM STEEL MEETING THE REQUIREMENTS OF AASHTO M169, GRADE 12L14 AND SHALL HAVE A MINIMUM LENGTH OF THREADS OF 1 5/8".

B. 1 - 7/8"Ø X 8 1/2" BOLT WITH WASHER. BOLT SHALL CONFORM TO THE REQUIREMENTS OF ASTM A307. BOLT AND WASHER SHALL BE GALVANIZED. AT THE CONTRACTORS OPTION, STAINLESS STEEL BOLT AND WASHER MAY BE USED AS AN ALTERNATE FOR THE 7/8"Ø X 8 1/2" GALVANIZED BOLT AND WASHER. THEY SHALL CONFORM TO OR EXCEED THE MECHANICAL REQUIREMENTS OF ASTM A307. THE USE OF THIS ALTERNATE SHALL BE APPROVED BY THE ENGINEER.

C. WIRE STRUT SHOWN IN THE CONCRETE INSERT ASSEMBLY DETAIL IS THE MINIMUM ALLOWABLE SIZE AND SHALL HAVE A MINIMUM TENSILE STRENGTH OF 100,000 P.S.I.

D. STRUCTURAL CONCRETE INSERT ASSEMBLIES SHALL BE HOT-DIP GALVANIZED IN ACCORDANCE WITH AASHTO M111.

THE COST OF THE STRUCTURAL CONCRETE INSERT ASSEMBLY, COMPLETE IN PLACE, SHALL BE INCLUDED IN THE UNIT CONTRACT PRICE BID FOR 3'-0"X 1'-9"PRESTRESSED CONCRETE CORED SLABS.

TO FACILITATE PLACEMENT OF STRUCTURAL CONCRETE INSERT ASSEMBLIES, #3 BARS MAY BE TIED TO THE #4 B1 BARS IN THE CORED SLAB UNITS. THE COST OF THE #3 BARS SHALL BE INCLUDED IN THE UNIT CONTRACT PRICE BID FOR 3'-0"X 1'-9"PRESTRESSED CONCRETE CORED SLABS.

STIRRUPS IN THE CORED SLAB UNITS MAY BE SHIFTED SLIGHTLY AS NECESSARY TO CLEAR STRUCTURAL CONCRETE INSERT ASSEMBLIES.

FERRULES TO BE PLUGGED DURING CASING OF CORED SLAB UNITS AS RECOMMENDED BY THE MANUFACTURER.

ANCHORED PORTABLE CONCRETE BARRIER SHALL BE AS SPECIFIED IN ROADWAY STANDARD NO. 1170.01. SEE TRAFFIC CONTROL PLANS.

AFTER REMOVAL OF THE ANCHORED PORTABLE CONCRETE BARRIER, THE STRUCTURAL CONCRETE INSERTS SHALL BE FILLED WITH GROUT.

PROJECT NO. B-3458

GRAHAM COUNTY

STATION: 13+30.00 -L-

SHEET 3 OF 4

STATE OF NORTH CAROLINA
DEPARTMENT OF TRANSPORTATION
RALEIGH

SUPERSTRUCTURE

ANCHORED PORTABLE CONCRETE BARRIER DETAILS

NORTH CAROLINA PROFESSIONAL SEAL 24939 ENGINEER BYRON E. ATKINSON
3/27/14

MI ENGINEERING
1011 SCHAUB DRIVE, SUITE 100
RALEIGH, NC 27606
(919) 851-6606
FIRM PE NUMBER : P-0671

REVISIONS						
NO.	BY:	DATE:	NO.	BY:	DATE:	
1			3			
2			4			

SHEET NO. S-8
TOTAL SHEETS 18

DRAWN BY :	B.E. LANNING	DATE :	03/14
CHECKED BY :	B.E. ATKINSON	DATE :	03/14
DESIGN ENGINEER OF RECORD :	B.E. ATKINSON	DATE :	03/14

3/21/2014
12:46:22 PM
User: blanning
Filename: P:\NC Bridges\MI3001 - Div 14 Bridge Replacements.MA Engr\MI3001.01_Graham 114\B-3458\Structures\B3458_SD_CSU3_114.dgn

BILL OF MATERIAL FOR ONE CORED SLAB UNIT

				STAGE I						STAGE II			
				TYPE 1 UNIT		TYPE 2 UNIT		TYPE 3 UNIT		TYPE 4 UNIT		TYPE 5 UNIT	
BAR	NUMBER	SIZE	TYPE	LENGTH	WEIGHT	LENGTH	WEIGHT	LENGTH	WEIGHT	LENGTH	WEIGHT	LENGTH	WEIGHT
B7	4	#4	STR	28′-3″	75	28′-3″	75	28′-3″	75	28′-3″	75	28′-3″	75
S1	8	#5	3	4′-3″	35	4′-3″	35	4′-3″	35	4′-3″	35	4′-3″	35
S2	114	#4	3	5′-4″	406	5′-4″	406	5′-4″	406	5′-4″	406	5′-4″	406
✱ S3	64	#5	1	6′-4″	423							6′-4″	423
REINFORCING STEEL LBS.					516		516		516		516		516
✱ EPOXY COATED REINFORCING STEEL LBS.					423								423
6500 P.S.I. CONCRETE CU. YDS.					7.8		7.8		8.7		7.8		7.8
0.6″ Ø L.R. STRANDS No.					19		19		19		19		19

GRADE 270 STRANDS

	0.6″ Ø L.R.
AREA (SQUARE INCHES)	0.217
ULTIMATE STRENGTH (LBS. PER STRAND)	58,600
APPLIED PRESTRESS (LBS. PER STRAND)	43,950

BAR TYPES

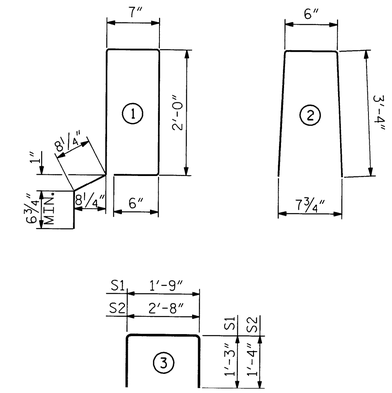

ALL BAR DIMENSIONS ARE OUT TO OUT.

NOTES

ALL PRESTRESSING STRANDS SHALL BE 7-WIRE LOW RELAXATION GRADE 270 STRANDS AND SHALL CONFORM TO AASHTO M203 EXCEPT FOR SAMPLING REQUIREMENTS WHICH SHALL BE IN ACCORDANCE WITH THE STANDARD SPECIFICATIONS.

ALL REINFORCING STEEL CAST WITH THE CORED SLAB SECTIONS SHALL BE GRADE 60 AND SHALL BE INCLUDED IN THE UNIT PRICE BID FOR PRESTRESSED CONCRETE CORED SLABS.

RECESSES FOR TRANSVERSE STRANDS SHALL BE GROUTED AFTER THE TENSIONING OF THE STRANDS.

THE 2½″ Ø DOWEL HOLES AT FIXED ENDS OF SLAB SECTIONS SHALL BE FILLED WITH NON-SHRINK GROUT.

THE BACKER RODS SHALL CONFORM TO THE REQUIREMENTS OF TYPE M BOND BREAKER. SEE SECTION 1028 OF THE STANDARD SPECIFICATIONS.

WHEN CORED SLABS ARE CAST, AN INTERNAL HOLD-DOWN SYSTEM SHALL BE EMPLOYED TO PREVENT VOIDS FROM RISING OR MOVING SIDEWAYS. AT LEAST SIX WEEKS PRIOR TO CASTING CORED SLABS, THE CONTRACTOR SHALL SUBMIT TO THE ENGINEER FOR REVIEW AND COMMENT, DETAILED DRAWINGS OF THE PROPOSED HOLD-DOWN SYSTEM. IN ADDITION TO STRUCTURAL DETAILS, LOCATION AND SPACING OF THE HOLD-DOWNS SHALL BE INDICATED.

ALL REINFORCING STEEL IN THE VERTICAL CONCRETE BARRIER RAIL SHALL BE EPOXY COATED.

PRESTRESSING STRANDS SHALL BE CUT FLUSH WITH THE CORED SLAB UNIT ENDS.

APPLY EPOXY PROTECTIVE COATING TO CORED SLAB UNIT ENDS.

GROOVED CONTRACTION JOINTS, ½″ IN DEPTH, SHALL BE TOOLED IN ALL EXPOSED FACES OF THE BARRIER RAIL AND IN ACCORDANCE WITH ARTICLE 825-10(B) OF THE STANDARD SPECIFICATIONS. A CONTRACTION JOINT SHALL BE LOCATED AT EACH THIRD POINT BETWEEN BARRIER RAIL EXPANSION JOINTS. ONLY ONE CONTRACTION JOINT IS REQUIRED AT MIDPOINT OF BARRIER RAIL SEGMENTS LESS THAN 20 FEET IN LENGTH AND NO CONTRACTION JOINTS ARE REQUIRED FOR THOSE SEGMENTS LESS THAN 10 FEET IN LENGTH.

TRANSVERSE POST TENSIONING OF THE CORED SLAB UNITS SHALL BE DONE IN ACCORDANCE WITH THE STANDARD SPECIFICATIONS.

THE TRANSFER OF LOAD FROM THE ANCHORAGES TO THE CORED SLAB UNIT SHALL BE DONE WHEN THE CONCRETE HAS REACHED A COMPRESSIVE STRENGTH OF NOT LESS THAN THE REQUIRED STRENGTH SHOWN IN THE "CONCRETE RELEASE STRENGTH" TABLE.

FOR GROUT FOR STRUCTURES, SEE SPECIAL PROVISIONS.

BILL OF MATERIAL FOR VERTICAL CONCRETE BARRIER RAIL

BAR	BARS PER PAIR OF EXTERIOR UNITS	TOTAL NO.	SIZE	TYPE	LENGTH	WEIGHT
	55′ UNIT					
✱B14	40	40	#5	STR	27′-1″	1130
✱ S4	128	128	#5	2	7′-2″	957
✱ EPOXY COATED REINFORCING STEEL				LBS.		2087
CLASS AA CONCRETE				CU.YDS.		15.0
TOTAL VERTICAL CONCRETE BARRIER RAIL				LN. FT.		110.25

CORED SLABS REQUIRED

	NUMBER	LENGTH	TOTAL LENGTH
STAGE I			
TYPE 1 UNIT	1	55′-0″	55′-0″
TYPE 2 UNIT	4	55′-0″	220′-0″
TYPE 3 UNIT	1	55′-0″	55′-0″
STAGE II			
TYPE 4 UNIT	3	55′-0″	165′-0″
TYPE 5 UNIT	1	55′-0″	55′-0″
TOTAL	10	----	550′-0″

CONCRETE RELEASE STRENGTH

UNIT	PSI
55′ UNITS	4900

GUTTERLINE ASPHALT THICKNESS & RAIL HEIGHT

27′-10″ CLEAR ROADWAY	ASPHALT OVERLAY THICKNESS	RAIL HEIGHT
	@ MID-SPAN	@ MID-SPAN
55′ UNITS	⊕ 1 3/16″	3′-7¾″

⊕ INCLUDES IMPACT OF SAG VERTICAL CURVE ALONG GRADE LINE -L-

DEAD LOAD DEFLECTION AND CAMBER

	3′-0″ x 1′-9″
55′ CORED SLAB UNIT	0.6″ Ø L.R. STRAND
CAMBER (SLAB ALONE IN PLACE)	2½″ ↑
DEFLECTION DUE TO SUPERIMPOSED DEAD LOAD✱✱	¼″ ↓
FINAL CAMBER	2¼″ ↑

✱✱ INCLUDES FUTURE WEARING SURFACE

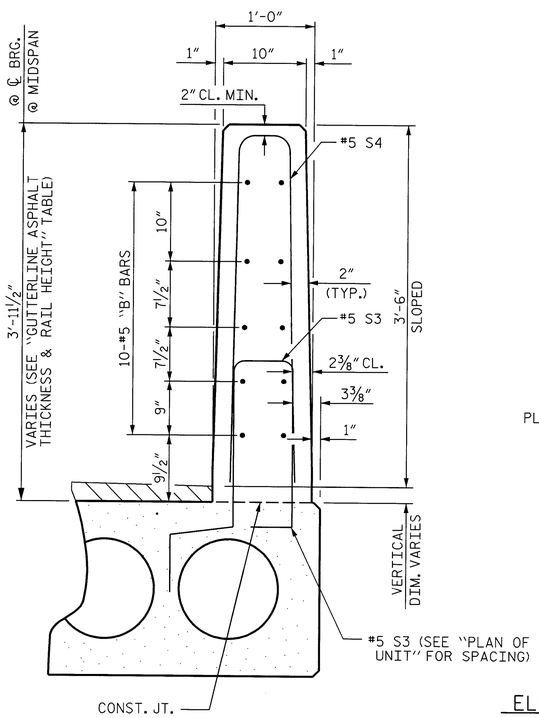

VERTICAL CONCRETE BARRIER RAIL SECTION

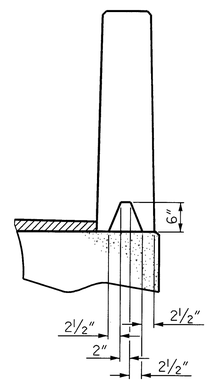

SECTION S-S

AT DAM IN OPEN JOINT (THIS IS TO BE USED ONLY WHEN SLIP FORM IS USED)

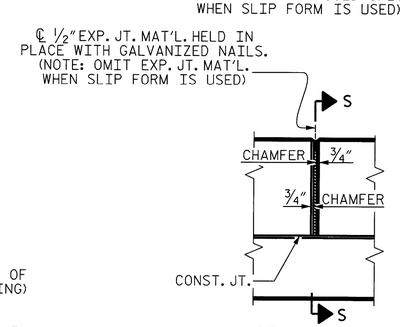

ELEVATION AT EXPANSION JOINTS

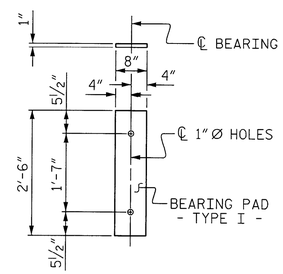

FIXED END

(TYPE I - 20 REQ'D.)

ELASTOMERIC BEARING DETAILS

ELASTOMER IN ALL BEARINGS SHALL BE 50 DUROMETER HARDNESS.

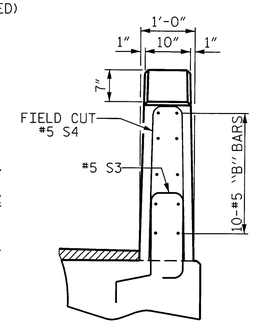

END VIEW

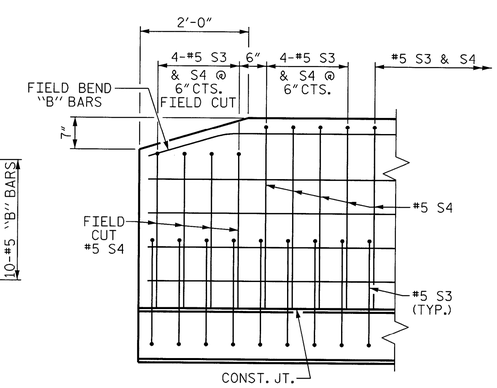

SIDE VIEW

END OF RAIL DETAILS

PROJECT NO. B-3458

GRAHAM COUNTY

STATION: 13+30.00 -L-

SHEET 4 OF 4

STATE OF NORTH CAROLINA
DEPARTMENT OF TRANSPORTATION
RALEIGH

SUPERSTRUCTURE

3′-0″ X 1′-9″
PRESTRESSED CONCRETE
CORED SLAB UNIT
90° SKEW

NORTH CAROLINA PROFESSIONAL SEAL 24939 ENGINEER BYRON E. ATKINSON
3/27/14

MI ENGINEERING
1011 SCHAUB DRIVE, SUITE 100
RALEIGH, NC 27606
(919) 851-6606
FIRM PE NUMBER : P-0671

REVISIONS						SHEET NO.
NO.	BY:	DATE:	NO.	BY:	DATE:	S-9
1			3			TOTAL SHEETS
2			4			18

DRAWN BY : B.E. LANNING DATE : 03/14
CHECKED BY : B.E. ATKINSON DATE : 03/14
DESIGN ENGINEER OF RECORD : B.E. ATKINSON DATE : 03/14

3/27/2014
12:46:50 PM
User: blanning
Filename: P:\NC Bridges\MI3001 - Div 14 Bridge Replacements.MA Engr\MI3001.01.Graham 114\B-3458\Structures\B3458_SD_CSU4_114.dgn

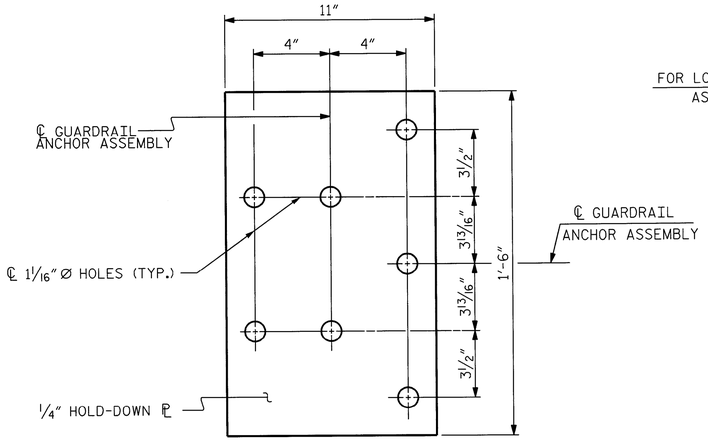

PLAN

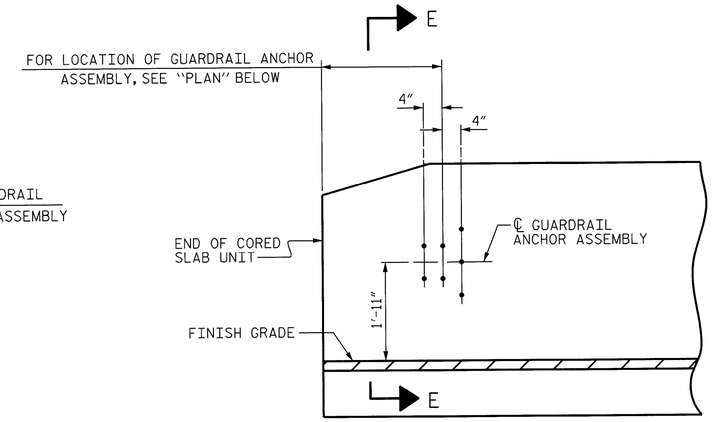

ELEVATION

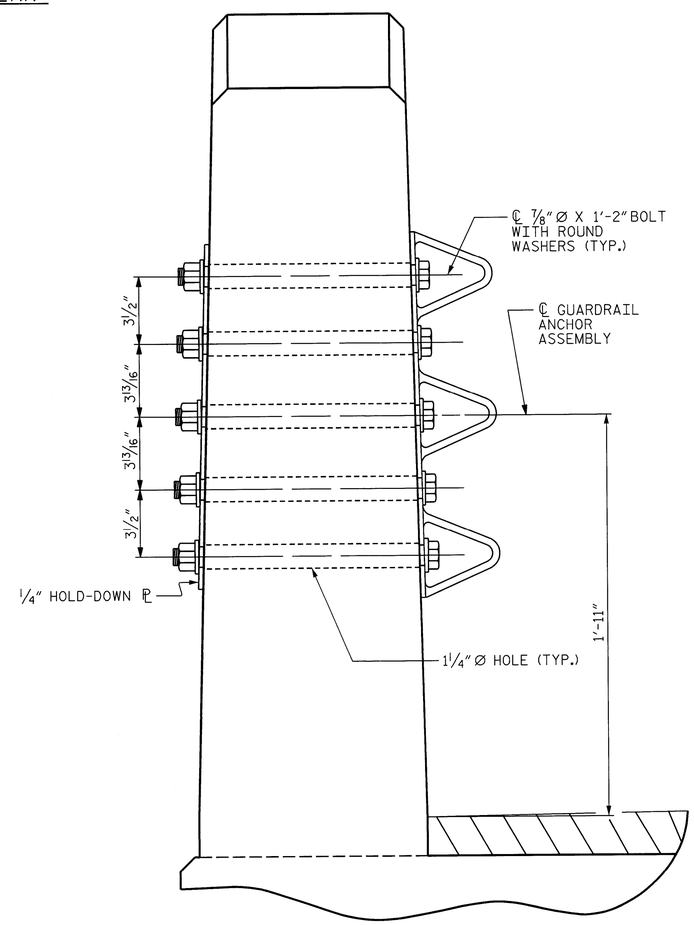

SECTION E-E

GUARDRAIL ANCHOR ASSEMBLY DETAILS

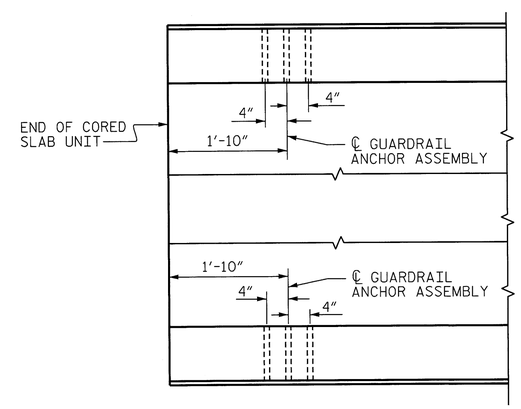

PLAN

LOCATION OF ANCHORS FOR GUARDRAIL

END BENT 1 SHOWN, END BENT 2 SIMILAR.

NOTES

THE GUARDRAIL ANCHOR ASSEMBLY SHALL CONSIST OF A 1/4" HOLD DOWN PLATE AND 7 - 7/8" Ø BOLTS WITH NUTS AND WASHERS.

THE HOLD-DOWN PLATE SHALL CONFORM TO AASHTO M270 GRADE 36. AFTER FABRICATION, THE HOLD-DOWN PLATE SHALL BE HOT-DIP GALVANIZED IN ACCORDANCE WITH AASHTO M111.

BOLTS SHALL CONFORM TO THE REQUIREMENTS OF ASTM A307 AND NUTS SHALL CONFORM TO THE REQUIREMENTS OF AASHTO M291. BOLTS, NUTS AND WASHERS SHALL BE GALVANIZED. (AT THE CONTRACTOR'S OPTION, STAINLESS STEEL BOLTS, NUTS AND WASHERS MAY BE USED AS AN ALTERNATE FOR THE 7/8" Ø GALVANIZED BOLTS, NUTS AND WASHERS. THEY SHALL CONFORM TO OR EXCEED THE MECHANICAL REQUIREMENTS OF ASTM A307. THE USE OF THIS ALTERNATE SHALL BE APPROVED BY THE ENGINEER.)

THE GUARDRAIL ANCHOR ASSEMBLY IS REQUIRED AT ALL POINTS WHERE APPROACH GUARDRAIL IS TO BE ATTACHED TO THE END OF BARRIER RAIL. FOR POINTS OF ATTACHMENT, SEE SKETCH.

AFTER INSTALLATION, THE EXPOSED THREAD OF THE BOLT SHALL BE BURRED WITH A SHARP POINTED TOOL.

THE COST OF THE GUARDRAIL ANCHOR ASSEMBLY SHALL BE INCLUDED IN THE UNIT CONTRACT PRICE BID FOR VERTICAL CONCRETE BARRIER RAIL.

THE VERTICAL REINFORCING BARS MAY BE SHIFTED SLIGHTLY IN THE VERTICAL CONCRETE BARRIER RAIL TO CLEAR ASSEMBLY BOLTS.

THE 1 1/4" Ø HOLES SHALL BE FORMED OR DRILLED WITH A CORE BIT. IMPACT TOOLS WILL NOT BE PERMITTED. ANY CONCRETE DAMAGED BY THIS WORK SHALL BE REPAIRED TO THE SATISFACTION OF THE ENGINEER.

SKETCH SHOWING POINTS OF ATTACHMENT

✳ DENOTES GUARDRAIL ANCHOR ASSEMBLY

PROJECT NO. B-3458

GRAHAM COUNTY

STATION: 13+30.00 -L-

NORTH CAROLINA PROFESSIONAL SEAL 24939 ENGINEER BYRON E. ATKINSON 3/27/14

STATE OF NORTH CAROLINA
DEPARTMENT OF TRANSPORTATION
RALEIGH

STANDARD
GUARDRAIL ANCHORAGE FOR VERTICAL CONCRETE BARRIER RAIL

MI ENGINEERING
1011 SCHAUB DRIVE, SUITE 100
RALEIGH, NC 27606
(919) 851-6606
FIRM PE NUMBER : P-0671

REVISIONS						SHEET NO.
NO.	BY:	DATE:	NO.	BY:	DATE:	S-10
1			3			TOTAL SHEETS
2			4			18

ASSEMBLED BY:	B.E. LANNING	DATE:	03/14
CHECKED BY :	B.E. ATKINSON	DATE:	03/14
DESIGN ENGINEER OF RECORD:	B.E. ATKINSON	DATE:	03/14
DRAWN BY : MMA 5/10	ADDED 5/6/10		
CHECKED BY : GM 5/10	REV. 10/11		
	REV. 12/5/11		

B.E. ATKINSON
MAA/GM

03/14

(SHT 1) STD. NO. GRA3

3/27/2014
2:20:23 PM
User: blanning
Filename: P:\NC Bridges\MI3001 - Div 14 Bridge Replacements.MA Engr\MI3001.01.Graham 114\B-3458\Structures\B3458_SD_GRA1_114.dgn

NOTES

STIRRUPS IN CAP MAY BE SHIFTED AS NECESSARY TO CLEAR DOWELS.

THE CONCRETE IN THE SHADED AREA OF THE WING SHALL BE POURED AFTER THE VERTICAL CONCRETE BARRIER RAIL IS CAST IF SLIP FORMING IS USED.

FOR PILE SPLICE DETAILS, SEE SHEET 3 OF 3.

FOR WING DETAILS, SEE SHEET 2 OF 3.

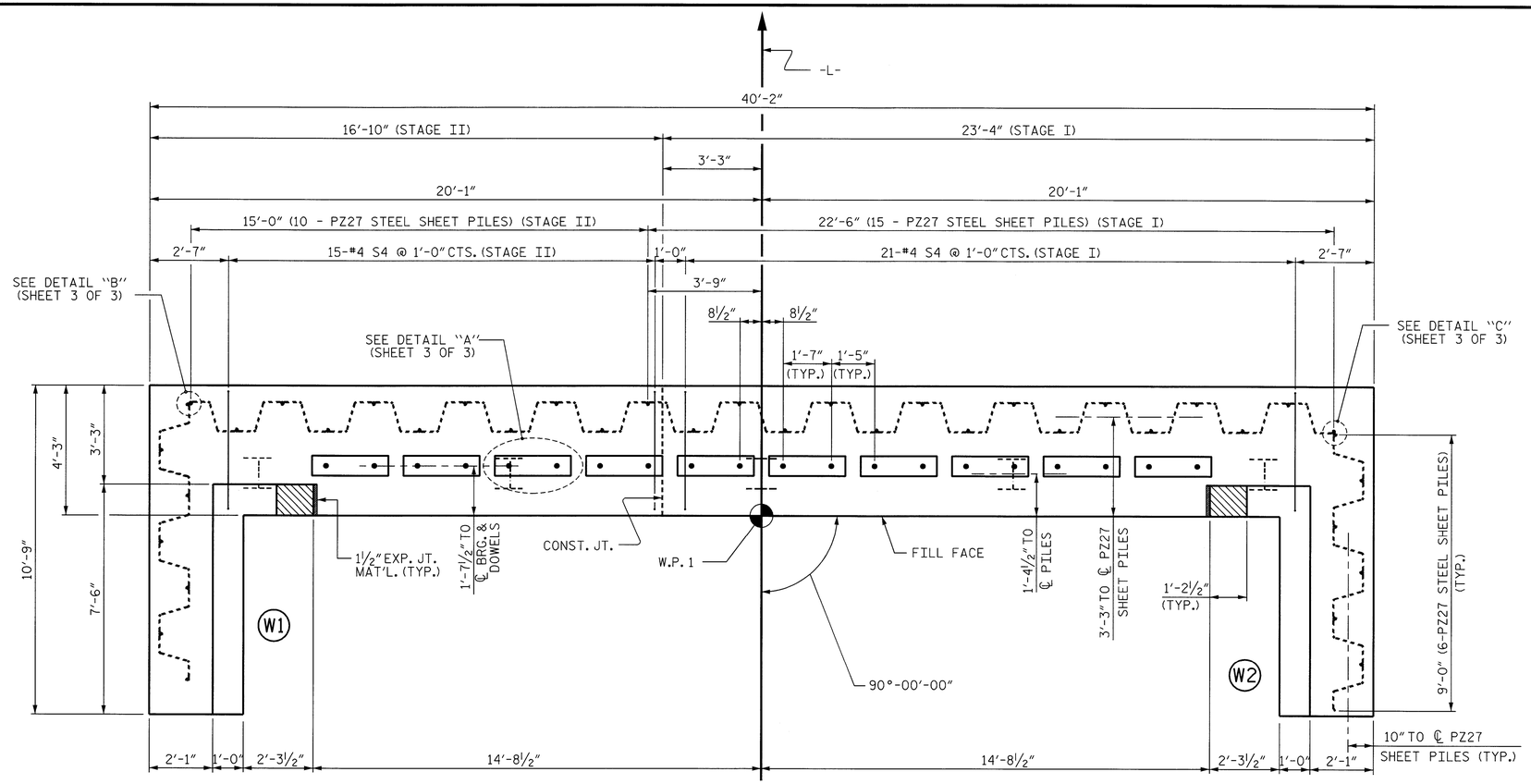

PLAN

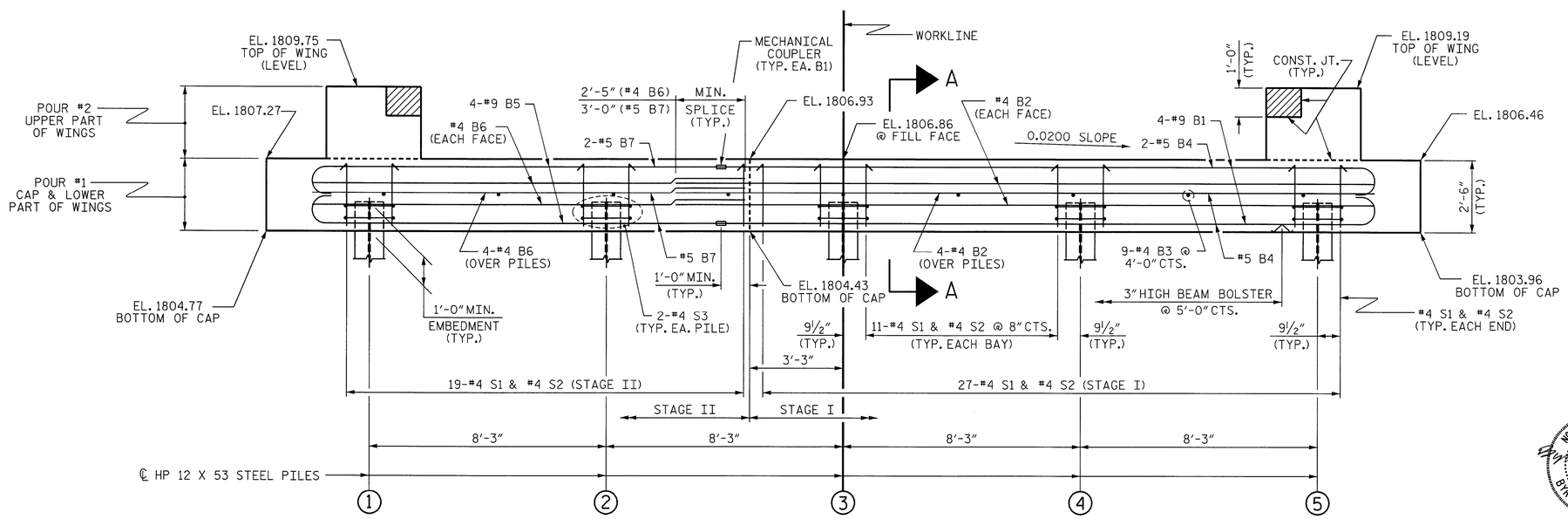

ELEVATION

SHEET PILES NOT SHOWN FOR CLARITY.
WINGS NOT SHOWN FOR CLARITY.
FOR SECTION A-A, SEE SHEET 3 OF 3.

TOP OF PILE ELEVATIONS	
1	1805.71
2	1805.54
3	1805.38
4	1805.21
5	1805.04

PROJECT NO. B-3458
GRAHAM COUNTY
STATION: 13+30.00 -L-

SHEET 1 OF 3

STATE OF NORTH CAROLINA
DEPARTMENT OF TRANSPORTATION
RALEIGH

SUBSTRUCTURE

END BENT 1

NORTH CAROLINA PROFESSIONAL SEAL 24939 ENGINEER BYRON E. ATKINSON 3/27/14

DRAWN BY : B.E. LANNING	DATE : 03/14
CHECKED BY : B.E. ATKINSON	DATE : 03/14
DESIGN ENGINEER OF RECORD : B.E. ATKINSON	DATE : 03/14

MI ENGINEERING
1011 SCHAUB DRIVE, SUITE 100
RALEIGH, NC 27606
(919) 851-6606
FIRM PE NUMBER : P-0671

REVISIONS								SHEET NO.
NO.	BY:	DATE:	NO.	BY:	DATE:			S-11
1			3					TOTAL SHEETS
2			4					18

3/27/2014
12:48:27 PM
User: blanning
Filename: P:\NC Bridges\MI3001 - Div 14 Bridge Replacements_MA Engr\MI3001.01_Graham 114\B-3458\Structures\B3458_SD_EB1A_114.dgn

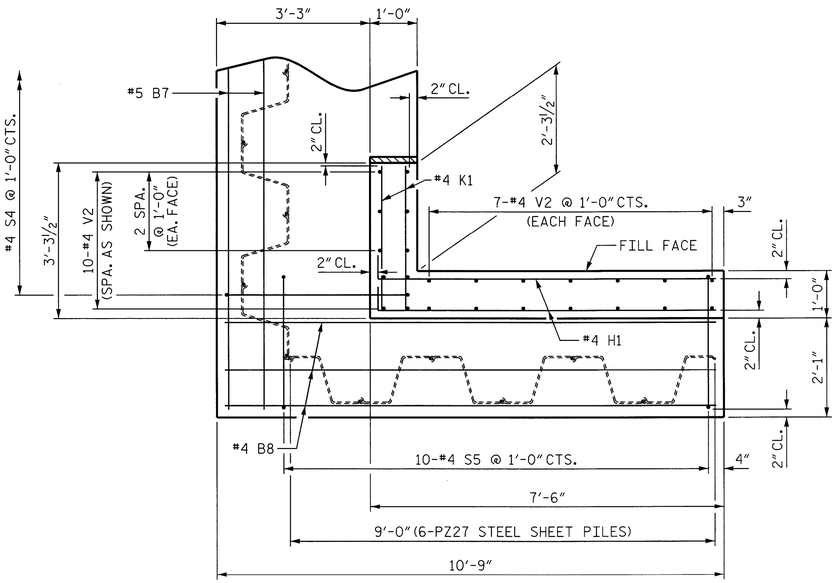

PLAN OF WING (W1)
(STAGE II)

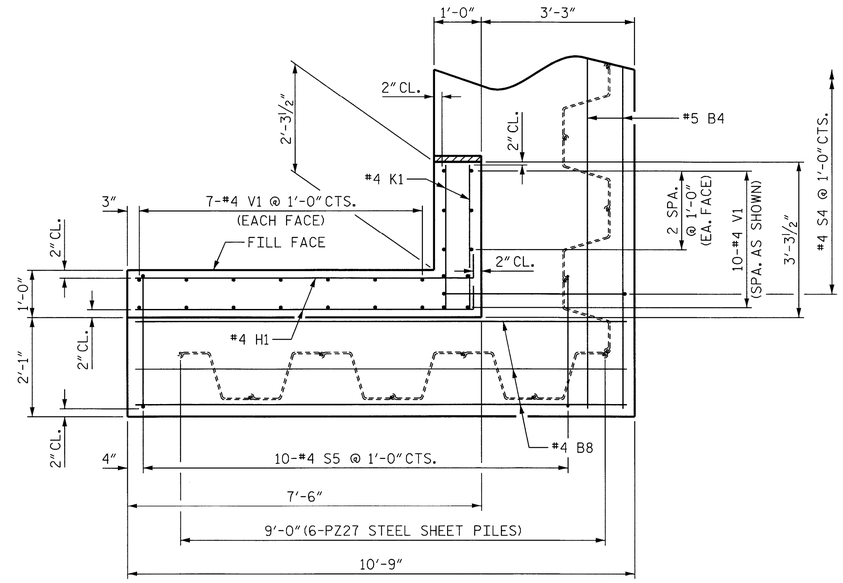

PLAN OF WING (W2)
(STAGE I)

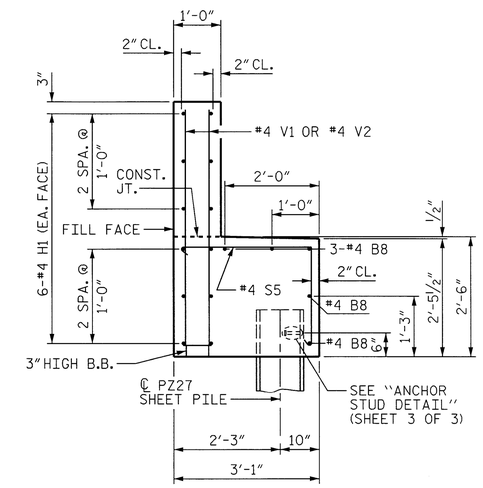

SECTION X-X

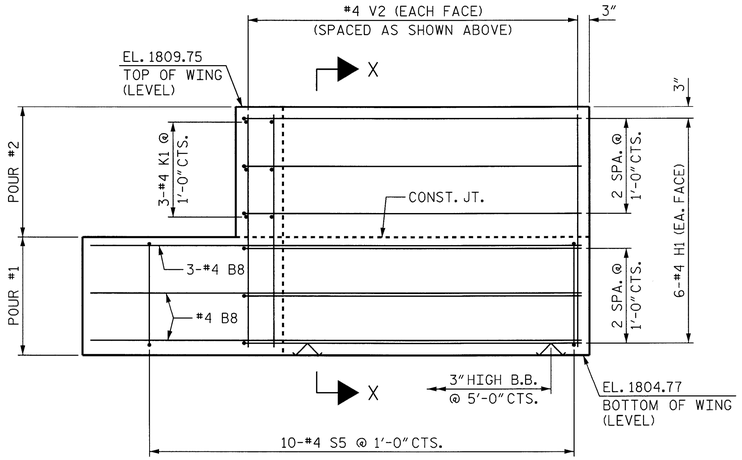

ELEVATION OF WING (W1)
(STAGE II)

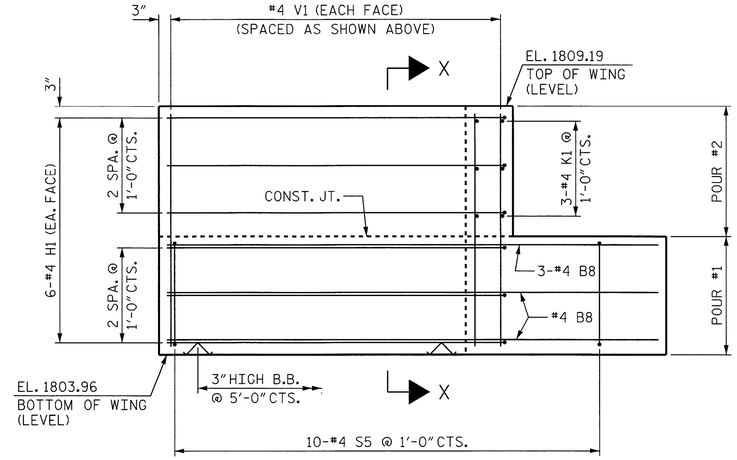

ELEVATION OF WING (W2)
(STAGE I)

WING DETAILS
(SHEET PILES NOT SHOWN FOR CLARITY)

PROJECT NO. B-3458
GRAHAM COUNTY
STATION: 13+30.00 -L-

SHEET 2 OF 3

STATE OF NORTH CAROLINA
DEPARTMENT OF TRANSPORTATION
RALEIGH

SUBSTRUCTURE
END BENT 1
WING DETAILS

NORTH CAROLINA PROFESSIONAL SEAL 24939 ENGINEER BYRON E. ATKINSON
3/27/14

MI ENGINEERING
1011 SCHAUB DRIVE, SUITE 100
RALEIGH, NC 27606
(919) 851-6606
FIRM PE NUMBER : P-0671

REVISIONS						
NO.	BY:	DATE:	NO.	BY:	DATE:	
1			3			
2			4			

SHEET NO. S-12
TOTAL SHEETS 18

DRAWN BY : B.E. LANNING DATE : 03/14
CHECKED BY : B.E. ATKINSON DATE : 03/14
DESIGN ENGINEER OF RECORD : B.E. ATKINSON DATE : 03/14

3/27/2014
12:48:48 PM
User: blanning
Filename: P:\NC Bridges\MI3001 - Div 14 Bridge Replacements_MA Engr\MI3001.01_Graham 114\B-3458\Structures\B3458_SD_EB1B_114.dgn

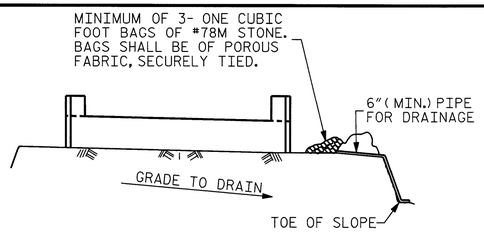

BAGGED STONE AND PIPE SHALL BE PLACED IMMEDIATELY AFTER COMPLETION OF END BENT EXCAVATION. PIPE MAY BE EITHER CONCRETE, CORRUGATED STEEL, CORRUGATED ALUMINUM ALLOY, OR CORRUGATED PLASTIC. PERFORATED PIPE WILL NOT BE ALLOWED.

BAGGED STONE SHALL REMAIN IN PLACE UNTIL THE ENGINEER DIRECTS THAT IT BE REMOVED. THE CONTRACTOR SHALL REMOVE AND DISPOSE OF SILT ACCUMULATIONS AT BAGGED STONE WHEN SO DIRECTED BY THE ENGINEER. BAGS SHALL BE REMOVED AND REPLACED WHENEVER THE ENGINEER DETERMINES THAT THEY HAVE DETERIORATED AND LOST THEIR EFFECTIVENESS.

NO SEPARATE PAYMENT WILL BE MADE FOR THIS WORK AND THE ENTIRE COST OF THIS WORK SHALL BE INCLUDED IN THE UNIT CONTRACT PRICE BID FOR THE SEVERAL PAY ITEMS.

TEMPORARY DRAINAGE AT END BENT

BAR TYPES

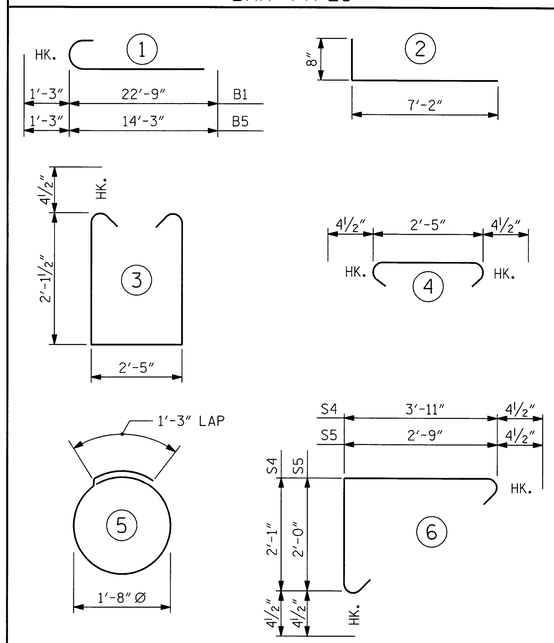

ALL BAR DIMENSIONS ARE OUT TO OUT.

BILL OF MATERIAL END BENT 1 (STAGE I)

BAR	NO.	SIZE	TYPE	LENGTH	WEIGHT
B1	8	#9	1	24'-0"	653
B2	8	#4	STR	24'-4"	130
B3	5	#4	STR	2'-5"	8
B4	4	#5	STR	26'-4"	110
B8	5	#4	STR	10'-5"	35
D1	12	#6	STR	1'-6"	27
H1	12	#4	2	7'-10"	63
K1	6	#4	STR	2'-11"	12
S1	27	#4	3	7'-5"	134
S2	27	#4	4	3'-2"	57
S3	6	#4	5	6'-6"	26
S4	21	#4	6	6'-9"	95
S5	10	#4	6	5'-6"	37
V1	24	#4	STR	4'-10"	77
STAGE I REINFORCING STEEL					1464

BILL OF MATERIAL END BENT 1 (STAGE II)

BAR	NO.	SIZE	TYPE	LENGTH	WEIGHT
B3	4	#4	STR	2'-5"	7
B5	8	#9	1	15'-6"	422
B6	8	#4	STR	15'-1"	81
B7	4	#5	STR	16'-6"	69
B8	5	#4	STR	10'-5"	35
D1	8	#6	STR	1'-6"	18
H1	12	#4	2	7'-10"	63
K1	6	#4	STR	2'-11"	12
S1	19	#4	3	7'-5"	94
S2	19	#4	4	3'-2"	40
S3	4	#4	5	6'-6"	17
S4	15	#4	6	6'-9"	68
S5	10	#4	6	5'-6"	37
V2	24	#4	STR	4'-7"	73
STAGE II REINFORCING STEEL					1036

STAGE I CLASS A CONCRETE BREAKDOWN

POUR #1	CAP & LOWER PART OF WINGS	11.1 C.Y.
POUR #2	UPPER PART OF WINGS	1.0 C.Y.
TOTAL CLASS "A" CONCRETE		12.1 C.Y.

STAGE II CLASS A CONCRETE BREAKDOWN

POUR #1	CAP & LOWER PART OF WINGS	8.5 C.Y.
POUR #2	UPPER PART OF WINGS	1.0 C.Y.
TOTAL CLASS "A" CONCRETE		9.5 C.Y.

HP 12 X 53 STEEL PILES
NO: 3 LIN. FT.= 45

HP 12 X 53 STEEL PILES
NO: 2 LIN. FT.= 30

18" STEEL SHEET PILES
NO. PZ27 = 21
NO. PZ90 = 1
TOTAL NO. = 22 256 SQ. FT.

18" STEEL SHEET PILES
NO. PZ27 = 16
NO. PZ90 = 1
TOTAL NO. = 17 208 SQ. FT.

TOTAL BILL OF MATERIAL - END BENT 1

TOTAL REINFORCING STEEL		2500 LBS.
TOTAL CLASS "A" CONCRETE		21.6 CU. YDS.
HP 12 X 53 STEEL PILES	NO. 5	75 LIN. FT.
18" STEEL SHEET PILES		464 SQ. FT.

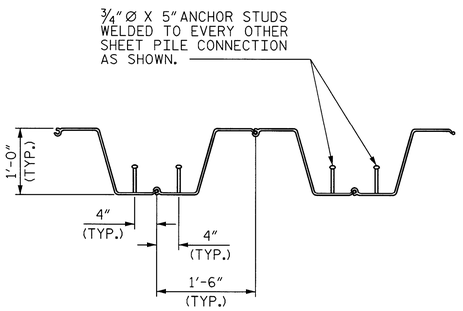

ANCHOR STUD DETAIL

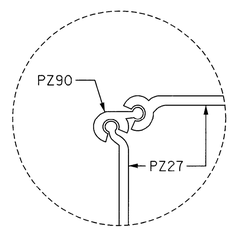

DETAIL "B"

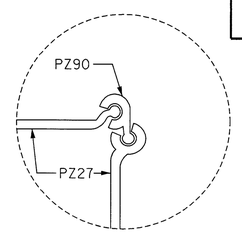

DETAIL "C"

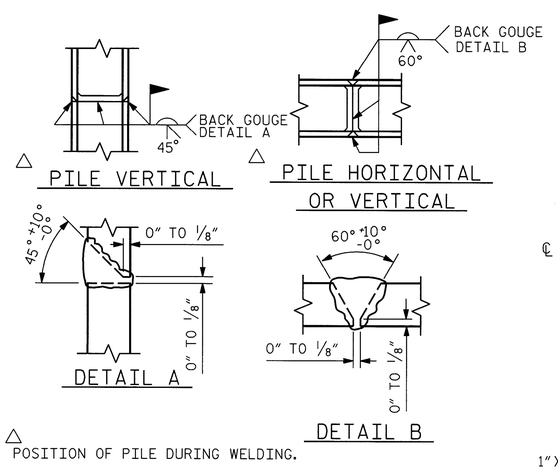

△ PILE VERTICAL

△ PILE HORIZONTAL OR VERTICAL

DETAIL A

DETAIL B

△ POSITION OF PILE DURING WELDING.

PILE SPLICE DETAILS

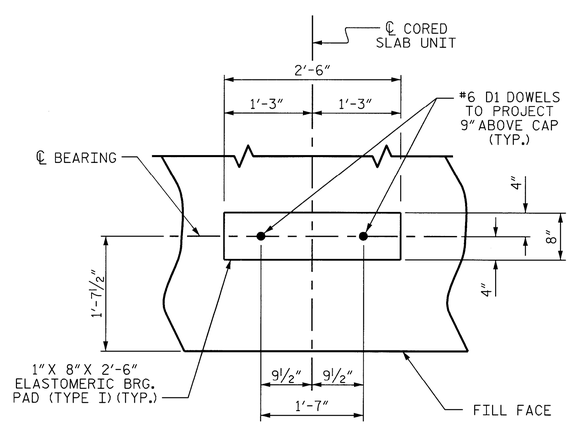

DETAIL "A"

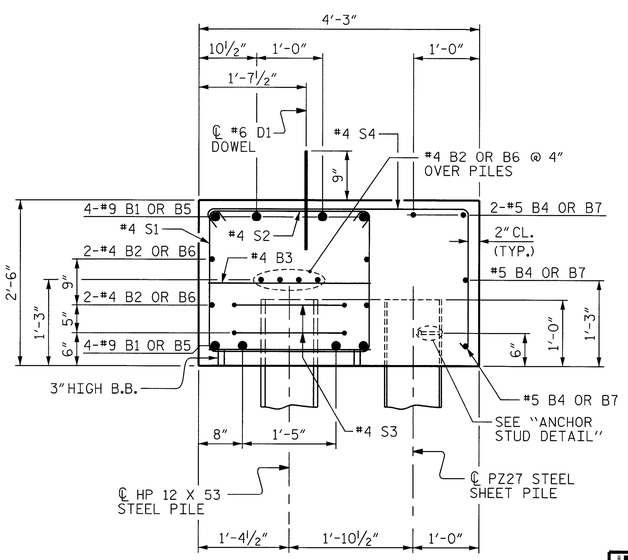

SECTION A-A

PROJECT NO. B-3458
GRAHAM COUNTY
STATION: 13+30.00 -L-

SHEET 3 OF 3

STATE OF NORTH CAROLINA
DEPARTMENT OF TRANSPORTATION
RALEIGH

SUBSTRUCTURE
END BENT 1
DETAILS

NORTH CAROLINA PROFESSIONAL SEAL 24939 ENGINEER BYRON E. ATKINSON
3/27/14

MI ENGINEERING
1011 SCHAUB DRIVE, SUITE 100
RALEIGH, NC 27606
(919) 851-6606
FIRM PE NUMBER : P-0671

REVISIONS						SHEET NO.
NO.	BY:	DATE:	NO.	BY:	DATE:	S-13
1			3			TOTAL SHEETS
2			4			18

DRAWN BY :	B.E. LANNING	DATE :	03/14
CHECKED BY :	B.E. ATKINSON	DATE :	03/14
DESIGN ENGINEER OF RECORD :	B.E. ATKINSON	DATE :	03/14

3/27/2014
12:49:08 PM
User: blanning
Filename: P:\NC Bridges\MI3001 - Div 14 Bridge Replacements_MA Engr\MI3001.01.Graham 114\B-3458\Structures\B3458_SD_EBIC_114.dgn

NOTES

STIRRUPS IN CAP MAY BE SHIFTED AS NECESSARY TO CLEAR DOWELS.

THE CONCRETE IN THE SHADED AREA OF THE WING SHALL BE POURED AFTER THE VERTICAL CONCRETE BARRIER RAIL IS CAST IF SLIP FORMING IS USED.

FOR PILE SPLICE DETAILS, SEE SHEET 3 OF 3.

FOR WING DETAILS, SEE SHEET 2 OF 3.

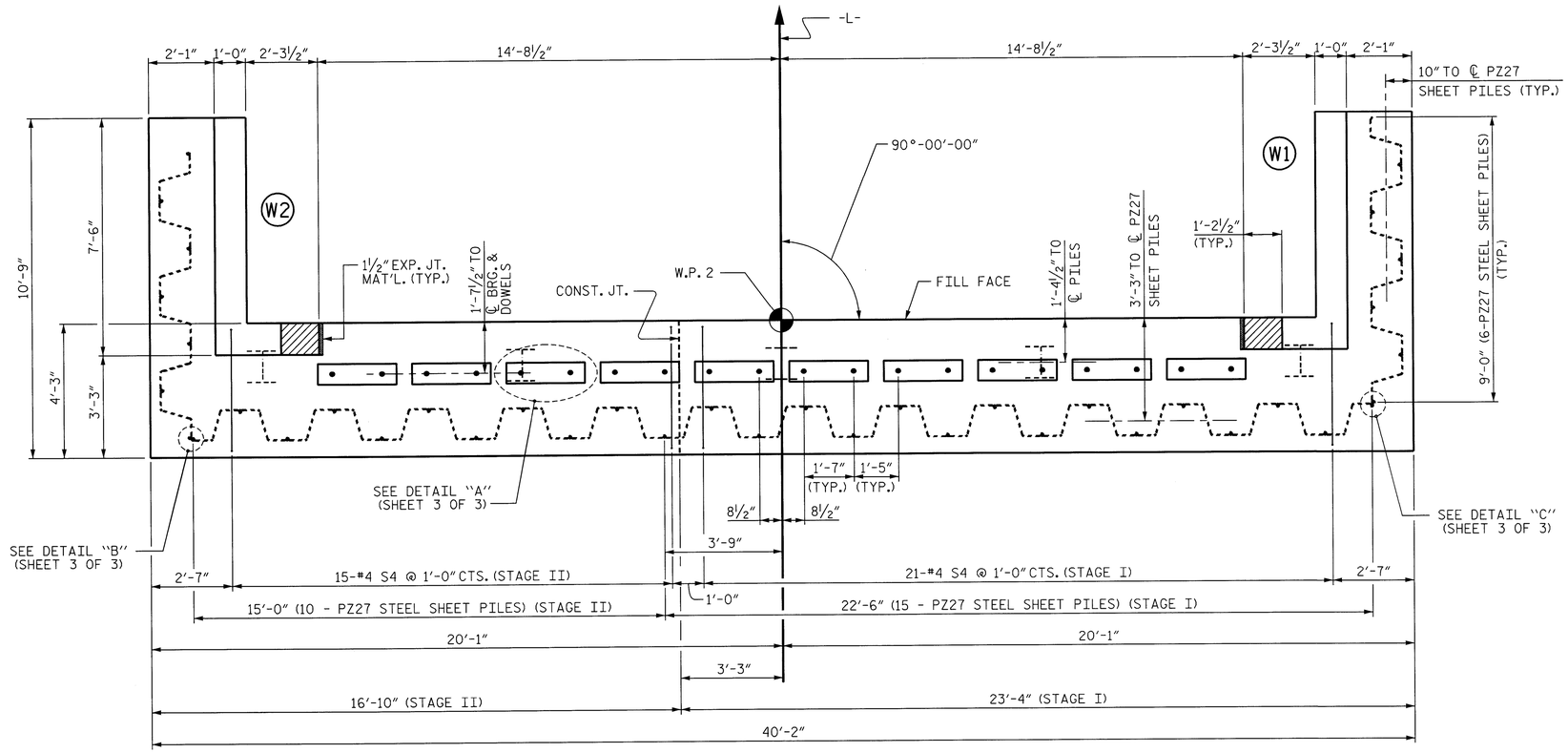

PLAN

TOP OF PILE ELEVATIONS	
1	1807.32
2	1807.15
3	1806.99
4	1806.83
5	1806.66

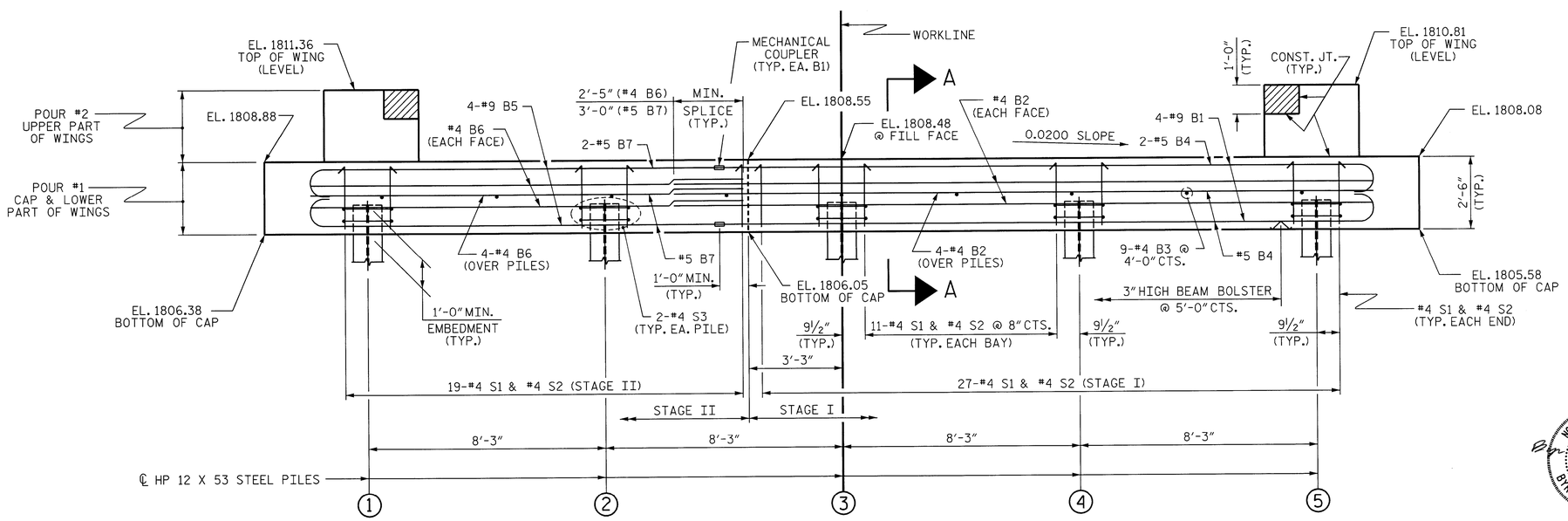

ELEVATION

SHEET PILES NOT SHOWN FOR CLARITY.
WINGS NOT SHOWN FOR CLARITY.
FOR SECTION A-A, SEE SHEET 3 OF 3.

PROJECT NO. B-3458
GRAHAM COUNTY
STATION: 13+30.00 -L-

SHEET 1 OF 3

STATE OF NORTH CAROLINA
DEPARTMENT OF TRANSPORTATION
RALEIGH

SUBSTRUCTURE

END BENT 2

NORTH CAROLINA PROFESSIONAL SEAL 24939 ENGINEER BYRON E. ATKINSON
3/27/14

MI ENGINEERING
1011 SCHAUB DRIVE, SUITE 100
RALEIGH, NC 27606
(919) 851-6606
FIRM PE NUMBER : P-0671

REVISIONS								SHEET NO.
NO.	BY:	DATE:	NO.	BY:	DATE:			S-14
1			3					TOTAL SHEETS
2			4					18

DRAWN BY :	B.E. LANNING	DATE :	03/14
CHECKED BY :	B.E. ATKINSON	DATE :	03/14
DESIGN ENGINEER OF RECORD :	B.E. ATKINSON	DATE :	03/14

3/27/2014
12:49:27 PM
User: bianning
Filename: P:\NC Bridges\MI3001 - Div 14 Bridge Replacements_MA Engr\MI3001.01_Graham 114\B-3458\Structures\B3458_SD_EB2A_114.dgn

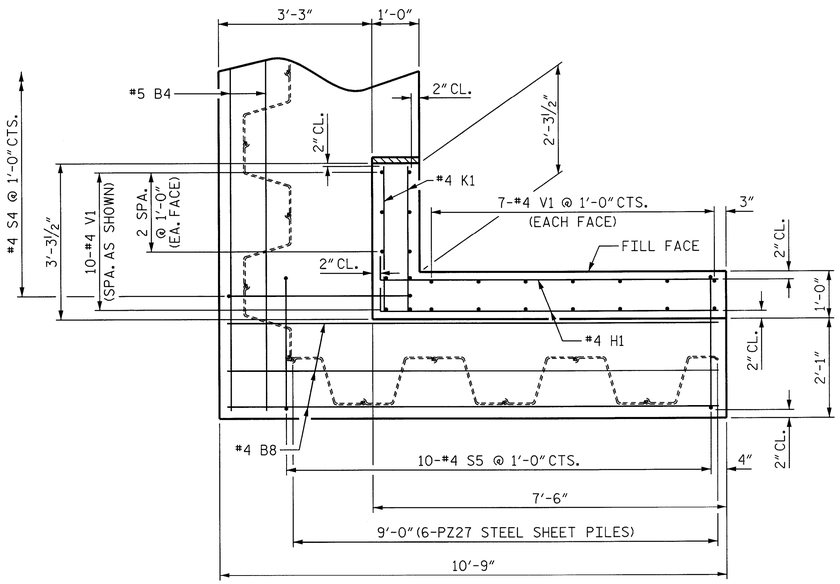

PLAN OF WING (W1)
(STAGE I)

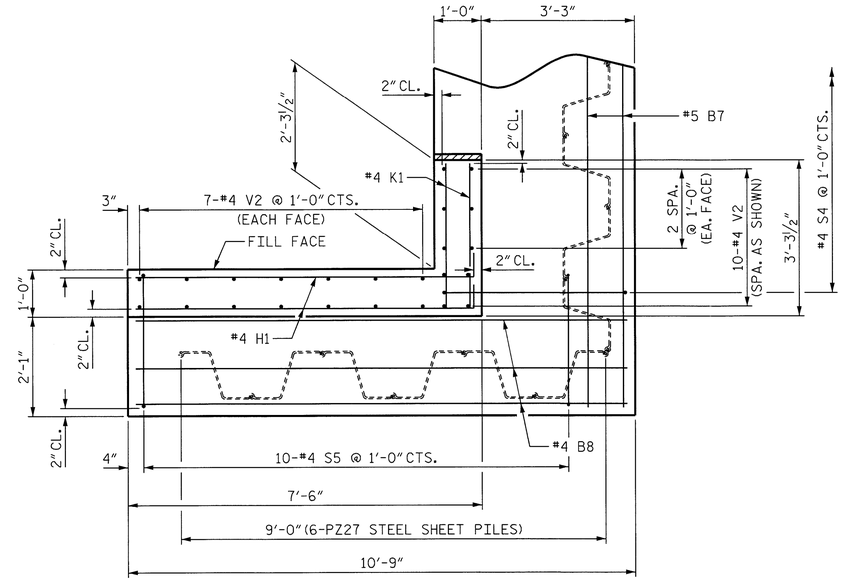

PLAN OF WING (W2)
(STAGE II)

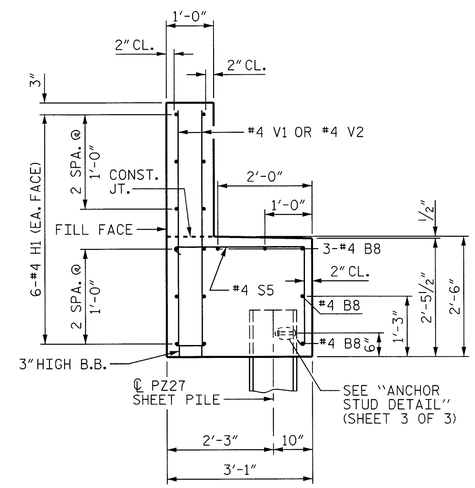

SECTION X-X

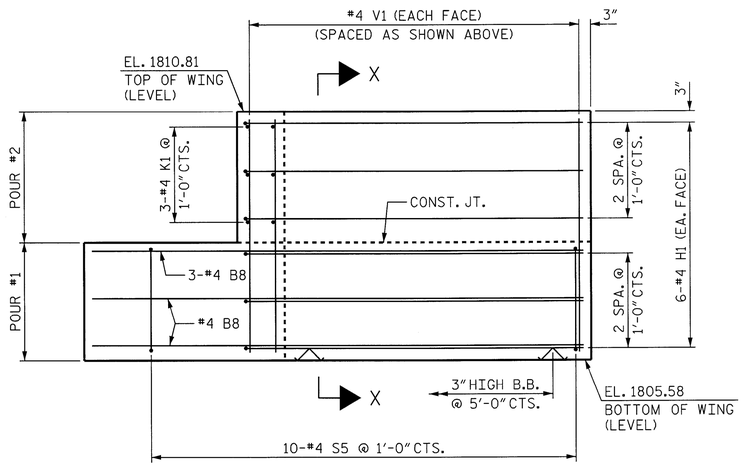

ELEVATION OF WING (W1)
(STAGE I)

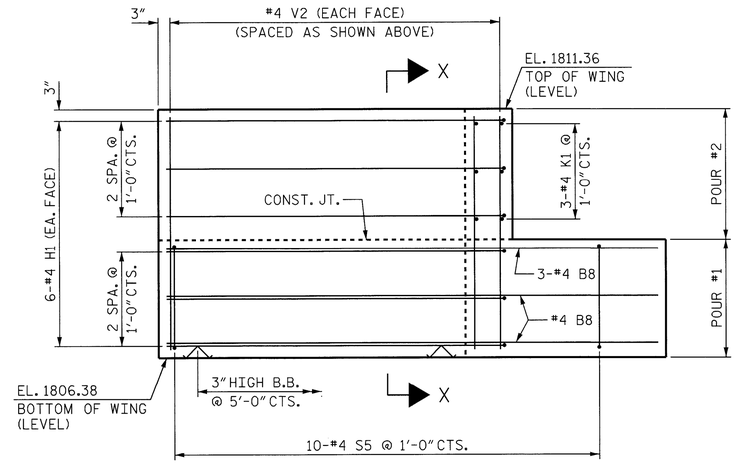

ELEVATION OF WING (W2)
(STAGE II)

WING DETAILS
(SHEET PILES NOT SHOWN FOR CLARITY)

PROJECT NO. B-3458
GRAHAM COUNTY
STATION: 13+30.00 -L-

SHEET 2 OF 3

STATE OF NORTH CAROLINA
DEPARTMENT OF TRANSPORTATION
RALEIGH

SUBSTRUCTURE
END BENT 2
WING DETAILS

NORTH CAROLINA PROFESSIONAL SEAL 24939 ENGINEER BYRON E. ATKINSON
3/27/14

MI ENGINEERING
1011 SCHAUB DRIVE, SUITE 100
RALEIGH, NC 27606
(919) 851-6606
FIRM PE NUMBER : P-0671

REVISIONS								SHEET NO.
NO.	BY:	DATE:	NO.	BY:	DATE:			S-15
1			3					TOTAL SHEETS
2			4					18

DRAWN BY :	B.E. LANNING	DATE :	03/14
CHECKED BY :	B.E. ATKINSON	DATE :	03/14
DESIGN ENGINEER OF RECORD :	B.E. ATKINSON	DATE :	03/14

3/27/2014
12:49:47 PM
User: blanning
Filename: P:\NC Bridges\MI3001 - Div 14 Bridge Replacements_MA Engr\MI3001.01_Graham 114\B-3458\Structures\B3458_SD_EB2B_114.dgn

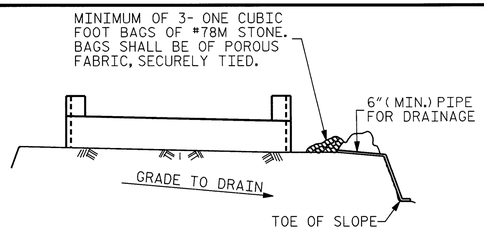

BAGGED STONE AND PIPE SHALL BE PLACED IMMEDIATELY AFTER COMPLETION OF END BENT EXCAVATION. PIPE MAY BE EITHER CONCRETE, CORRUGATED STEEL, CORRUGATED ALUMINUM ALLOY, OR CORRUGATED PLASTIC. PERFORATED PIPE WILL NOT BE ALLOWED.

BAGGED STONE SHALL REMAIN IN PLACE UNTIL THE ENGINEER DIRECTS THAT IT BE REMOVED. THE CONTRACTOR SHALL REMOVE AND DISPOSE OF SILT ACCUMULATIONS AT BAGGED STONE WHEN SO DIRECTED BY THE ENGINEER. BAGS SHALL BE REMOVED AND REPLACED WHENEVER THE ENGINEER DETERMINES THAT THEY HAVE DETERIORATED AND LOST THEIR EFFECTIVENESS.

NO SEPARATE PAYMENT WILL BE MADE FOR THIS WORK AND THE ENTIRE COST OF THIS WORK SHALL BE INCLUDED IN THE UNIT CONTRACT PRICE BID FOR THE SEVERAL PAY ITEMS.

TEMPORARY DRAINAGE AT END BENT

BAR TYPES

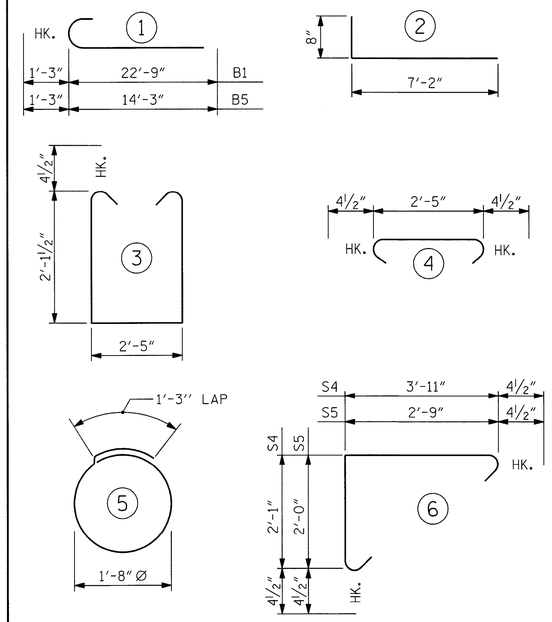

ALL BAR DIMENSIONS ARE OUT TO OUT.

BILL OF MATERIAL END BENT 2 (STAGE I)

BAR	NO.	SIZE	TYPE	LENGTH	WEIGHT
B1	8	#9	1	24'-0"	653
B2	8	#4	STR	24'-4"	130
B3	5	#4	STR	2'-5"	8
B4	4	#5	STR	26'-4"	110
B8	5	#4	STR	10'-5"	35
D1	12	#6	STR	1'-6"	27
H1	12	#4	2	7'-10"	63
K1	6	#4	STR	2'-11"	12
S1	27	#4	3	7'-5"	134
S2	27	#4	4	3'-2"	57
S3	6	#4	5	6'-6"	26
S4	21	#4	6	6'-9"	95
S5	10	#4	6	5'-6"	37
V1	24	#4	STR	4'-10"	77

STAGE I REINFORCING STEEL 1464

STAGE I
CLASS A CONCRETE BREAKDOWN

POUR #1 CAP & LOWER PART OF WINGS 11.1 C.Y.

POUR #2 UPPER PART OF WINGS 1.0 C.Y.

TOTAL CLASS "A" CONCRETE 12.1 C.Y.

HP 12 X 53 STEEL PILES
NO: 3 LIN. FT.= 45

18" STEEL SHEET PILES
NO. PZ27 = 21
NO. PZ90 = 1
TOTAL NO. = 22 339 SQ. FT.

BILL OF MATERIAL END BENT 2 (STAGE II)

BAR	NO.	SIZE	TYPE	LENGTH	WEIGHT
B3	4	#4	1	2'-5"	7
B5	8	#9	STR	15'-6"	422
B6	8	#4	STR	15'-1"	81
B7	4	#5	STR	16'-6"	69
B8	5	#4	STR	10'-5"	35
D1	8	#6	STR	1'-6"	18
H1	12	#4	2	7'-10"	63
K1	6	#4	STR	2'-11"	12
S1	19	#4	3	7'-5"	94
S2	19	#4	4	3'-2"	40
S3	4	#4	5	6'-6"	17
S4	15	#4	6	6'-9"	68
S5	10	#4	6	5'-6"	37
V2	24	#4	STR	4'-7"	73

STAGE II REINFORCING STEEL 1036

STAGE II
CLASS A CONCRETE BREAKDOWN

POUR #1 CAP & LOWER PART OF WINGS 8.5 C.Y.

POUR #2 UPPER PART OF WINGS 1.0 C.Y.

TOTAL CLASS "A" CONCRETE 9.5 C.Y.

HP 12 X 53 STEEL PILES
NO: 2 LIN. FT.= 30

18" STEEL SHEET PILES
NO. PZ27 = 16
NO. PZ90 = 1
TOTAL NO. = 17 271 SQ. FT.

TOTAL BILL OF MATERIAL - END BENT 2

TOTAL REINFORCING STEEL		2500 LBS.
TOTAL CLASS "A" CONCRETE		21.6 CU. YDS.
HP 12 X 53 STEEL PILES	NO. 5	75 LIN. FT.
18" STEEL SHEET PILES		610 SQ. FT.

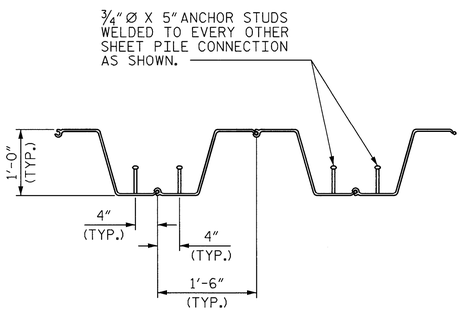

ANCHOR STUD DETAIL

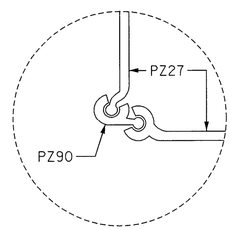

DETAIL "B"

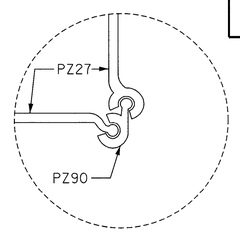

DETAIL "C"

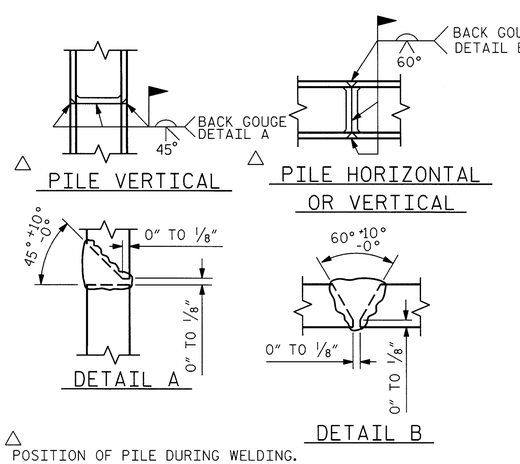

PILE SPLICE DETAILS

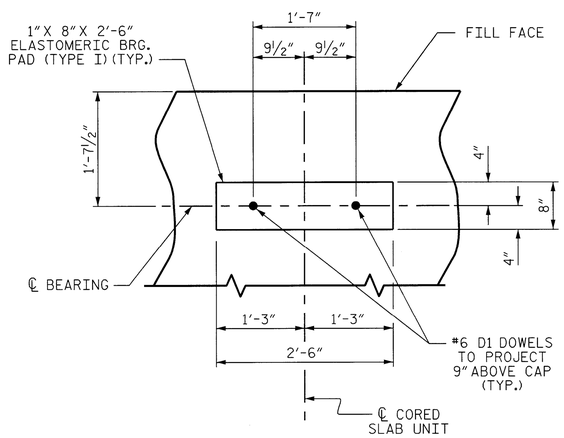

DETAIL "A"

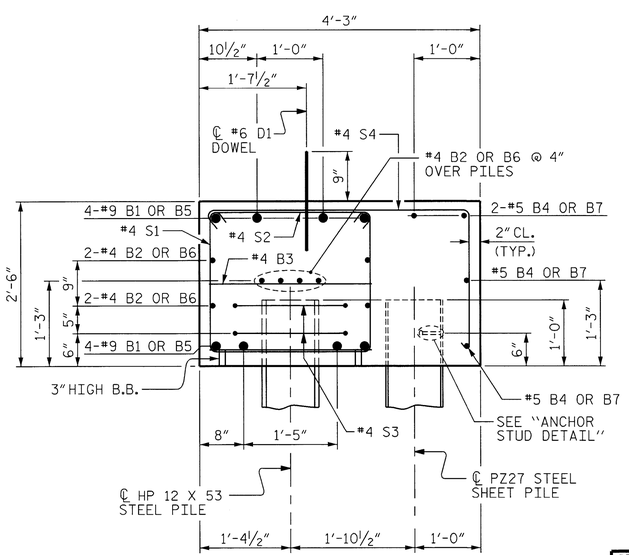

SECTION A-A

PROJECT NO. B-3458
GRAHAM COUNTY
STATION: 13+30.00 -L-

SHEET 3 OF 3

STATE OF NORTH CAROLINA
DEPARTMENT OF TRANSPORTATION
RALEIGH

SUBSTRUCTURE
END BENT 2
DETAILS

NORTH CAROLINA PROFESSIONAL SEAL 24939 ENGINEER BYRON E. ATKINSON
6/4/14

MI ENGINEERING
1011 SCHAUB DRIVE, SUITE 100
RALEIGH, NC 27606
(919) 851-6606
FIRM PE NUMBER : P-0671

REVISIONS						SHEET NO.
NO.	BY:	DATE:	NO.	BY:	DATE:	S-16
1			3			TOTAL SHEETS
2			4			18

DRAWN BY :	B.E. LANNING	DATE :	03/14
CHECKED BY :	B.E. ATKINSON	DATE :	03/14
DESIGN ENGINEER OF RECORD :	B.E. ATKINSON	DATE :	03/14

6/4/2014
11:06:06 AM
User: blanning
Filename: P:\NC Bridges\MI3001 - Div 14 Bridge Replacements.MA Engr\MI3001.01_Graham 114\B-3458\Structures\B3458_SD_EB2C_114.dgn

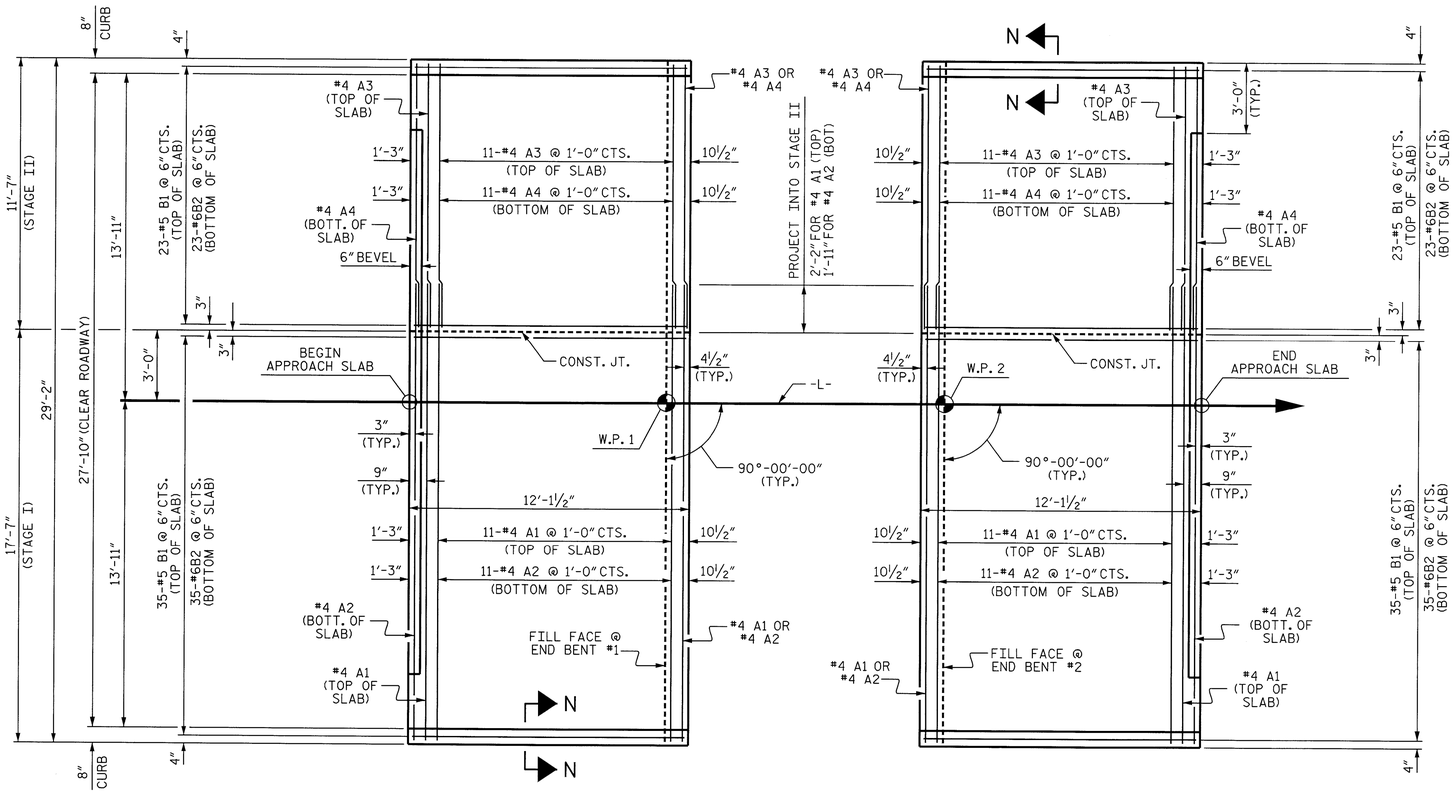

PLAN @ END BENT 1

PLAN @ END BENT 2

DIMENSIONS SHOWN ARE TYPICAL FOR BOTH APPROACH SLABS

NOTES

FOR BRIDGE APPROACH FILL INCLUDING GEOTEXTILE, 4"Ø DRAINAGE PIPE, AND #78M STONE BACKFILL, SEE ROADWAY PLANS.

GEOTEXTILE SHALL BE TYPE 1 IN ACCORDANCE WITH THE STANDARD SPECIFICATIONS SECTION 1056.

#78M STONE BACKFILL (CLASS V SELECT MATERIAL) SHALL BE IN ACCORDANCE WITH STANDARD SPECIFICATIONS SECTION 1016.

#78M STONE BACKFILL IS TO BE CONTINUOUS ALONG FILL FACE OF BACKWALL FROM OUTSIDE EDGE TO OUTSIDE EDGE OF APPROACH SLAB.

FOR THE 4"Ø DRAINAGE PIPE OUTLET(S), SEE ROADWAY STANDARD DRAWINGS.

AREA BETWEEN THE WINGWALL AND APPROACH SLAB SHALL BE GRADED TO DRAIN THE WATER AWAY FROM THE FILL FACE OF THE BRIDGE AND SHALL BE PAVED. SEE ROADWAY PLANS.

APPROACH SLAB GROOVING IS NOT REQUIRED.

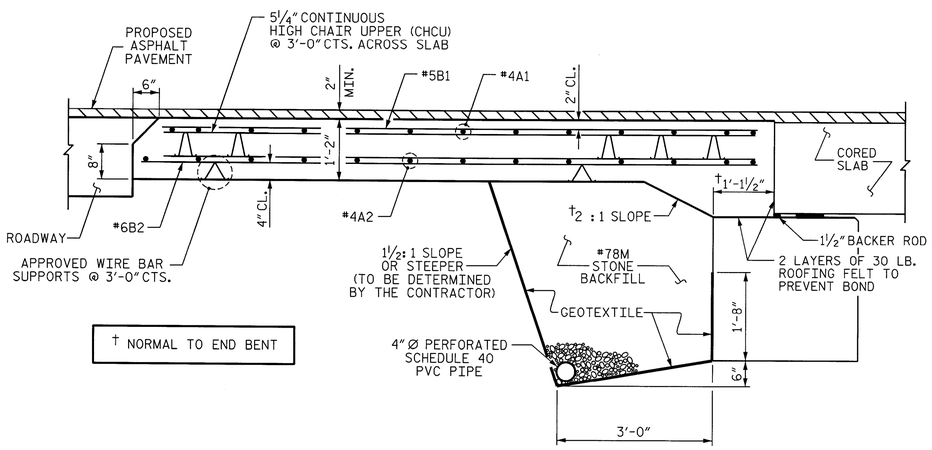

† NORMAL TO END BENT

SECTION THRU SLAB

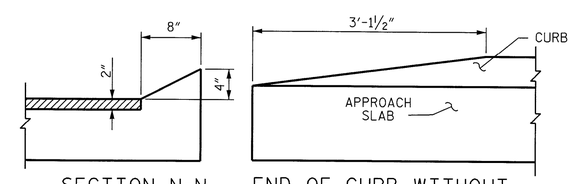

SECTION N-N

END OF CURB WITHOUT SHOULDER BERM GUTTER

CURB DETAILS

PROJECT NO. B-3458

GRAHAM COUNTY

STATION: 13+30.00 -L-

SHEET 1 OF 2

STATE OF NORTH CAROLINA
DEPARTMENT OF TRANSPORTATION
RALEIGH

BRIDGE APPROACH SLAB FOR PRESTRESSED CONCRETE CORED SLAB UNIT (SUB-REGIONAL TIER)
90° SKEW

NORTH CAROLINA PROFESSIONAL SEAL 24939 ENGINEER BYRON E. ATKINSON
3/27/14

DRAWN BY :	B.E. LANNING	DATE :	03/14
CHECKED BY :	B.E. ATKINSON	DATE :	03/14
DESIGN ENGINEER OF RECORD :	B.E. ATKINSON	DATE :	03/14

MI ENGINEERING
1011 SCHAUB DRIVE, SUITE 100
RALEIGH, NC 27606
(919) 851-6606
FIRM PE NUMBER : P-0671

REVISIONS							
NO.	BY:	DATE:	NO.	BY:	DATE:	SHEET NO.	S-17
1			3			TOTAL SHEETS	18
2			4				

3/27/2014
12:50:34 PM
User: blanning
Filename: P:\NC Bridges\MI3001 - Div 14 Bridge Replacements_MA Engr\MI3001.01_Graham 114\B-3458\Structures\B3458_SD_AS1_114.dgn

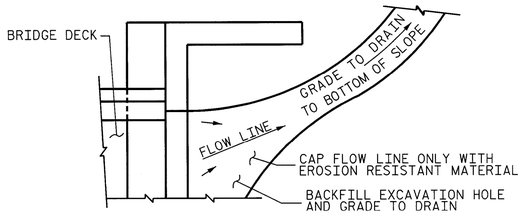

NOTE: IF THE APPROACH SLAB IS NOT CONSTRUCTED IMMEDIATELY AFTER THE BACKFILLING OF THE END BENT EXCAVATION, GRADE TO DRAIN TO THE BOTTOM OF THE SLOPE AND PROVIDE EROSION RESISTANT MATERIAL, SUCH AS FIBERGLASS ROVING OR AS DIRECTED BY THE ENGINEER TO PREVENT SOIL EROSION AND TO PROTECT THE AREA ADJACENT TO THE STRUCTURE. THE CONTRACTOR WILL BE REQUIRED TO REMOVE THESE MATERIALS PRIOR TO CONSTRUCTION OF THE APPROACH SLAB.

TEMPORARY DRAINAGE DETAIL

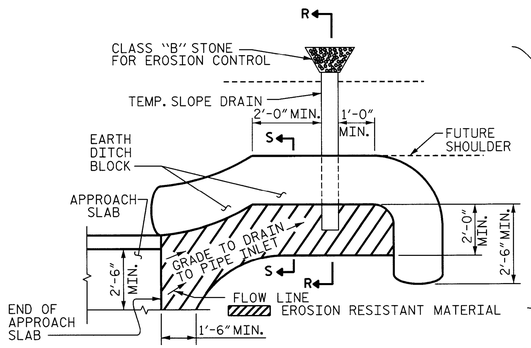

NOTE: IMMEDIATELY AFTER THE CONSTRUCTION OF THE APPROACH SLAB, THE CONTRACTOR SHALL PROVIDE TEMPORARY BERM AND SLOPE DRAIN. CONTRACTOR SHALL GRADE TO PIPE INLET AND PROVIDE EROSION RESISTANT MATERIAL AS SHOWN. THE EROSION RESISTANT MATERIAL SHALL BE EITHER 1) ASPHALT PLANT MIX, TYPE 1 OR TYPE 2, MIN. 2" DEPTH, 2) EROSION CONTROL MAT, OR 3) CONCRETE, AS DIRECTED BY THE ENGINEER. THE SLOPE DRAIN SHALL CONSIST OF A NON-PERFORATED TEMPORARY DRAINAGE PIPE, 12 INCHES IN DIAMETER.

PLAN VIEW

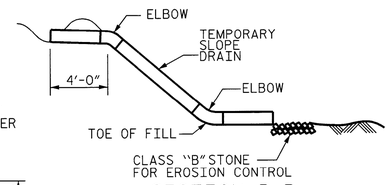

SECTION R-R

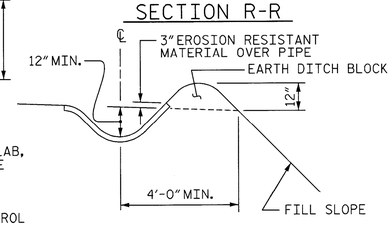

SECTION S-S

TEMPORARY BERM AND SLOPE DRAIN DETAILS

(TO BE USED WHEN SHOULDER BERM GUTTER IS REQUIRED)

BILL OF MATERIAL (STAGE I) APPROACH SLAB AT EB 1

BAR	NO.	SIZE	TYPE	LENGTH	WEIGHT
* A1	13	#4	STR	19'-7"	170
A2	13	#4	STR	19'-4"	168
* B1	35	#5	STR	11'-2"	408
B2	35	#6	STR	11'-8"	613
REINFORCING STEEL				LBS.	781
* EPOXY COATED REINFORCING STEEL				LBS.	578
CLASS AA CONCRETE				C.Y.	10.6

BILL OF MATERIAL (STAGE II) APPROACH SLAB AT EB 1

BAR	NO.	SIZE	TYPE	LENGTH	WEIGHT
* A3	13	#4	STR	11'-3"	98
A4	13	#4	STR	11'-3"	98
* B1	23	#5	STR	11'-2"	268
B2	23	#6	STR	11'-8"	403
REINFORCING STEEL				LBS.	501
* EPOXY COATED REINFORCING STEEL				LBS.	366
CLASS AA CONCRETE				C.Y.	7.0

BILL OF MATERIAL (STAGE I) APPROACH SLAB AT EB 2

BAR	NO.	SIZE	TYPE	LENGTH	WEIGHT
* A1	13	#4	STR	19'-7"	170
A2	13	#4	STR	19'-4"	168
* B1	35	#5	STR	11'-2"	408
B2	35	#6	STR	11'-8"	613
REINFORCING STEEL				LBS.	781
* EPOXY COATED REINFORCING STEEL				LBS.	578
CLASS AA CONCRETE				C.Y.	10.6

BILL OF MATERIAL (STAGE II) APPROACH SLAB AT EB 2

BAR	NO.	SIZE	TYPE	LENGTH	WEIGHT
* A3	13	#4	STR	11'-3"	98
A4	13	#4	STR	11'-3"	98
* B1	23	#5	STR	11'-2"	268
B2	23	#6	STR	11'-8"	403
REINFORCING STEEL				LBS.	501
* EPOXY COATED REINFORCING STEEL				LBS.	366
CLASS AA CONCRETE				C.Y.	7.0

SPLICE LENGTHS

BAR SIZE	EPOXY COATED	UNCOATED
#4	2'-0"	1'-9"
#5	2'-6"	2'-2"
#6	3'-10"	2'-7"

PROJECT NO. B-3458

GRAHAM COUNTY

STATION: 13+30.00 -L-

SHEET 2 OF 2

STATE OF NORTH CAROLINA
DEPARTMENT OF TRANSPORTATION
RALEIGH

BRIDGE APPROACH SLAB DETAILS

NORTH CAROLINA PROFESSIONAL SEAL 24939 ENGINEER BYRON E. ATKINSON
3/27/14

MI ENGINEERING
1011 SCHAUB DRIVE, SUITE 100
RALEIGH, NC 27606
(919) 851-6606
FIRM PE NUMBER : P-0671

REVISIONS						SHEET NO.
NO.	BY:	DATE:	NO.	BY:	DATE:	S-18
1			3			TOTAL SHEETS
2			4			18

DRAWN BY : B.E. LANNING DATE : 03/14
CHECKED BY : B.E. ATKINSON DATE : 03/14
DESIGN ENGINEER OF RECORD : B.E. ATKINSON DATE : 03/14

3/27/2014
12:50:58 PM
User: blanning
Filename: P:\NC Bridges\MI3001 - Div 14 Bridge Replacements_MA Engr\MI3001.01_Graham 114\B-3458\Structures\B3458_SD_AS2_114.dgn

STANDARD NOTES

DESIGN DATA:

SPECIFICATIONS	A.A.S.H.T.O. (CURRENT)
LIVE LOAD	SEE PLANS
IMPACT ALLOWANCE	SEE A.A.S.H.T.O.
STRESS IN EXTREME FIBER OF	
STRUCTURAL STEEL - AASHTO M270 GRADE 36	20,000 LBS. PER SQ. IN.
- AASHTO M270 GRADE 50W	27,000 LBS. PER SQ. IN.
- AASHTO M270 GRADE 50	27,000 LBS. PER SQ. IN.
REINFORCING STEEL IN TENSION	
GRADE 60	24,000 LBS. PER SQ. IN.
CONCRETE IN COMPRESSION	1,200 LBS. PER SQ. IN.
CONCRETE IN SHEAR	SEE A.A.S.H.T.O.
STRUCTURAL TIMBER - TREATED OR	
UNTREATED - EXTREME FIBER STRESS	1,800 LBS. PER SQ. IN.
COMPRESSION PERPENDICULAR TO GRAIN OF TIMBER	375 LBS. PER SQ. IN.
EQUIVALENT FLUID PRESSURE OF EARTH	30 LBS. PER CU. FT. (MINIMUM)

MATERIAL AND WORKMANSHIP:

EXCEPT AS MAY OTHERWISE BE SPECIFIED ON PLANS OR IN THE SPECIAL PROVISIONS, ALL MATERIAL AND WORKMANSHIP SHALL BE IN ACCORDANCE WITH THE 2012 "STANDARD SPECIFICATIONS FOR ROADS AND STRUCTURES" OF THE N. C. DEPARTMENT OF TRANSPORTATION.

STEEL SHEET PILING FOR PERMANENT OR TEMPORARY APPLICATIONS SHALL BE HOT ROLLED.

CONCRETE:

UNLESS OTHERWISE REQUIRED ON PLANS, CLASS A CONCRETE SHALL BE USED FOR ALL PORTIONS OF ALL STRUCTURES WITH THE EXCEPTION THAT: CLASS AA CONCRETE SHALL BE USED IN BRIDGE SUPERSTRUCTURES, ABUTMENT BACKWALLS, AND APPROACH SLABS; AND CLASS B CONCRETE SHALL BE USED FOR SLOPE PROTECTION AND RIP RAP.

CONCRETE CHAMFERS:

UNLESS OTHERWISE NOTED ON THE PLANS, ALL EXPOSED CORNERS ON STRUCTURES SHALL BE CHAMFERED 3/4" WITH THE FOLLOWING EXCEPTIONS: TOP CORNERS OF CURBS MAY BE ROUNDED TO 1-1/2" RADIUS WHICH IS BUILT INTO CURB FORMS; CORNERS OF TRANSVERSE FLOOR EXPANSION JOINTS SHALL BE ROUNDED WITH A 1/4" FINISHING TOOL UNLESS OTHERWISE REQUIRED ON PLANS; AND CORNERS OF EXPANSION JOINTS IN THE ROADWAY FACES AND TOPS OF CURBS AND SIDEWALKS SHALL BE ROUNDED TO A 1/4" RADIUS WITH A FINISHING STONE OR TOOL UNLESS OTHERWISE REQUIRED ON PLANS.

DOWELS:

DOWELS WHEN INDICATED ON PLANS AS FOR CULVERT EXTENSIONS, SHALL BE EMBEDDED AT LEAST 12" INTO THE OLD CONCRETE AND GROUTED INTO PLACE WITH 1:2 CEMENT MORTAR.

ALLOWANCE FOR DEAD LOAD DEFLECTION, SETTLEMENT, ETC. IN CASTING SUPERSTRUCTURES:

BRIDGES SHALL BE BUILT ON THE GRADE OR VERTICAL CURVE SHOWN ON PLANS. SLABS, CURBS AND PARAPETS SHALL CONFORM TO THE GRADE OR CURVE.

ALL DIMENSIONS WHICH ARE GIVEN IN SECTION AND ARE AFFECTED BY DEAD LOAD DEFLECTIONS ARE DIMENSIONS AT CENTER LINE OF BEARING UNLESS OTHERWISE NOTED ON PLANS. IN SETTING FORMS FOR STEEL BEAM BRIDGES AND PRESTRESSED CONCRETE GIRDER BRIDGES, ADJUSTMENTS SHALL BE MADE DUE TO THE DEAD LOAD DEFLECTIONS FOR THE ELEVATIONS SHOWN. WHERE BLOCKS ARE SHOWN OVER BEAMS FOR BUILDING UP TO THE SLAB, THE VERTICAL DIMENSIONS OF THE BLOCKS SHALL BE ADJUSTED BETWEEN BEARINGS TO COMPENSATE FOR DEAD LOAD DEFLECTIONS, VERTICAL CURVE ORDINATE, AND ACTUAL BEAM CAMBER. WHERE BOTTOM OF SLAB IS IN LINE WITH BOTTOM OF TOP FLANGES, DEPTH OF SLAB BETWEEN BEARINGS SHALL BE ADJUSTED TO COMPENSATE FOR DEAD LOAD DEFLECTION, VERTICAL CURVE ORDINATE, AND ACTUAL BEAM CAMBER.

IN SETTING FALSEWORK AND FORMS FOR REINFORCED CONCRETE SPANS, AN ALLOWANCE SHALL BE MADE FOR DEAD LOAD DEFLECTIONS, SETTLEMENT OF FALSEWORK, AND PERMANENT CAMBER WHICH SHALL BE PROVIDED FOR IN ADDITION TO THE ELEVATIONS SHOWN. AFTER REMOVAL OF THE FALSEWORK, THE FINISHED STRUCTURES SHALL CONFORM TO THE PROFILE AND ELEVATIONS SHOWN ON THE PLANS AND CONSTRUCTION ELEVATIONS FURNISHED BY THE ENGINEER.

DETAILED DRAWINGS FOR FALSEWORK OR FORMS FOR BRIDGE SUPERSTRUCTURE AND ANY STRUCTURE OR PARTS OF A STRUCTURE AS NOTED ON THE PLANS SHALL BE SUBMITTED TO THE ENGINEER FOR APPROVAL BEFORE CONSTRUCTION OF THE FALSEWORK OR FORMS IS STARTED.

REINFORCING STEEL:

ALL REINFORCING STEEL SHALL BE DEFORMED. DIMENSIONS RELATIVE TO PLACEMENT OF REINFORCING ARE TO CENTERS OF BARS UNLESS OTHERWISE INDICATED IN THE PLANS. DIMENSIONS ON BAR DETAILS ARE TO CENTERS OF BARS OR ARE OUT TO OUT AS INDICATED ON PLANS.

WIRE BAR SUPPORTS SHALL BE PROVIDED FOR REINFORCING STEEL WHERE INDICATED ON THE PLANS. WHEN BAR SUPPORT PIECES ARE PLACED IN CONTINUOUS LINES, THEY SHALL BE SO PLACED THAT THE ENDS OF THE SUPPORTING WIRES SHALL BE LAPPED TO LOCK LEGS ON ADJOINING PIECES.

STRUCTURAL STEEL:

AT THE CONTRACTOR'S OPTION, HE MAY SUBSTITUTE 7/8" Ø SHEAR STUDS FOR THE 3/4" Ø STUDS SPECIFIED ON THE PLANS. THIS SUBSTITUTION SHALL BE MADE AT THE RATE OF 3 - 7/8" Ø STUDS FOR 4 - 3/4" Ø STUDS, AND STUD SPACING CHANGES SHALL BE MADE AS NECESSARY TO PROVIDE THE SAME EQUIVALENT NUMBER OF 7/8" Ø STUDS ALONG THE BEAM AS SHOWN FOR 3/4" Ø STUDS BASED ON THE RATIO OF 3 - 7/8" Ø STUDS FOR 4 - 3/4" Ø STUDS. STUDS OF THE LENGTH SPECIFIED ON THE PLANS MUST BE PROVIDED. THE MAXIMUM SPACING SHALL BE 2'-0".

EXCEPT AT THE INTERIOR SUPPORTS OF CONTINUOUS BEAMS WHERE THE COVER PLATE IS IN CONTACT WITH BEARING PLATE, THE CONTRACTOR MAY, AT HIS OPTION, SUBSTITUTE FOR THE COVER PLATES DESIGNATED ON THE PLANS COVER PLATES OF THE EQUIVALENT AREA PROVIDED THESE PLATES ARE AT LEAST 5/16" IN THICKNESS AND DO NOT EXCEED A WIDTH EQUAL TO THE FLANGE WIDTH LESS 2" OR A THICKNESS EQUAL TO 2 TIMES THE FLANGE THICKNESS. THE SIZE OF FILLET WELDS SHALL CONFORM TO THE REQUIREMENTS OF THE CURRENT ANSI/AASHTO/AWS "BRIDGE WELDING CODE". ELECTROSLAG WELDING WILL NOT BE PERMITTED.

WITH THE SOLE EXCEPTION OF EDGES AT SURFACES WHICH BEAR ON OTHER SURFACES, ALL SHARP EDGES AND ENDS OF SHAPES AND PLATES SHALL BE SLIGHTLY ROUNDED BY SUITABLE MEANS TO A RADIUS OF APPROXIMATELY 1/16 INCH OR EQUIVALENT FLAT SURFACE AT A SUITABLE ANGLE PRIOR TO PAINTING, GALVANIZING, OR METALLIZING.

HANDRAILS AND POSTS:

METAL STANDARDS AND FACES OF THE CONCRETE END POSTS FOR THE METAL RAIL SHALL BE SET NORMAL TO THE GRADE OF THE CURB, UNLESS OTHERWISE SHOWN ON PLANS. THE METAL RAIL AND TOPS OF CONCRETE POSTS USED WITH THE ALUMINUM RAIL SHALL BE BUILT PARALLEL TO THE GRADE OF THE CURB.

METAL HANDRAILS SHALL BE IN ACCORDANCE WITH THE PLANS. RAILS SHALL BE AS MANUFACTURED FOR BRIDGE RAILING. CASTINGS SHALL BE OF A UNIFORM APPEARANCE. FINS AND OTHER DEFORMATIONS RESULTING FROM CASTING OR OTHERWISE SHALL BE REMOVED IN A MANNER SO THAT A UNIFORM COLORING OF THE COMPLETED CASTING SHALL BE OBTAINED. CASTINGS WITH DISCOLORATIONS OR OF NON-UNIFORM COLORING WILL NOT BE ACCEPTED. CERTIFIED MILL REPORTS ARE REQUIRED FOR METAL RAILS AND POSTS.

SPECIAL NOTES:

GENERALLY, IN CASE OF DISCREPANCY, THIS STANDARD SHEET OF NOTES SHALL GOVERN OVER THE SPECIFICATIONS, BUT THE REMAINDER OF THE PLANS SHALL GOVERN OVER NOTES HEREON, AND SPECIAL PROVISIONS SHALL GOVERN OVER ALL. SEE SPECIFICATIONS ARTICLE 105-4.

ENGLISH

JANUARY, 1990