09/08/99

TIP PROJECT: 17BP.14.R.69

CONTRACT: DN00191

STATE	STATE PROJECT REFERENCE NO.	SHEET NO.	TOTAL SHEETS
N.C.	17BP.14.R.69	1	

STATE PROJ. NO.	F.A. PROJ. NO.	DESCRIPTION
17BP.14.R.69		PE, R/W, UTIL
17BP.14.R.69		CONST

STATE OF NORTH CAROLINA
DIVISION OF HIGHWAYS

MACON COUNTY

LOCATION: BRIDGE 115 OVER BAKERS CREEK ON SR 1104 (MULBERRY RD.)

TYPE OF WORK: GRADING, PAVING, DRAINAGE & STRUCTURE

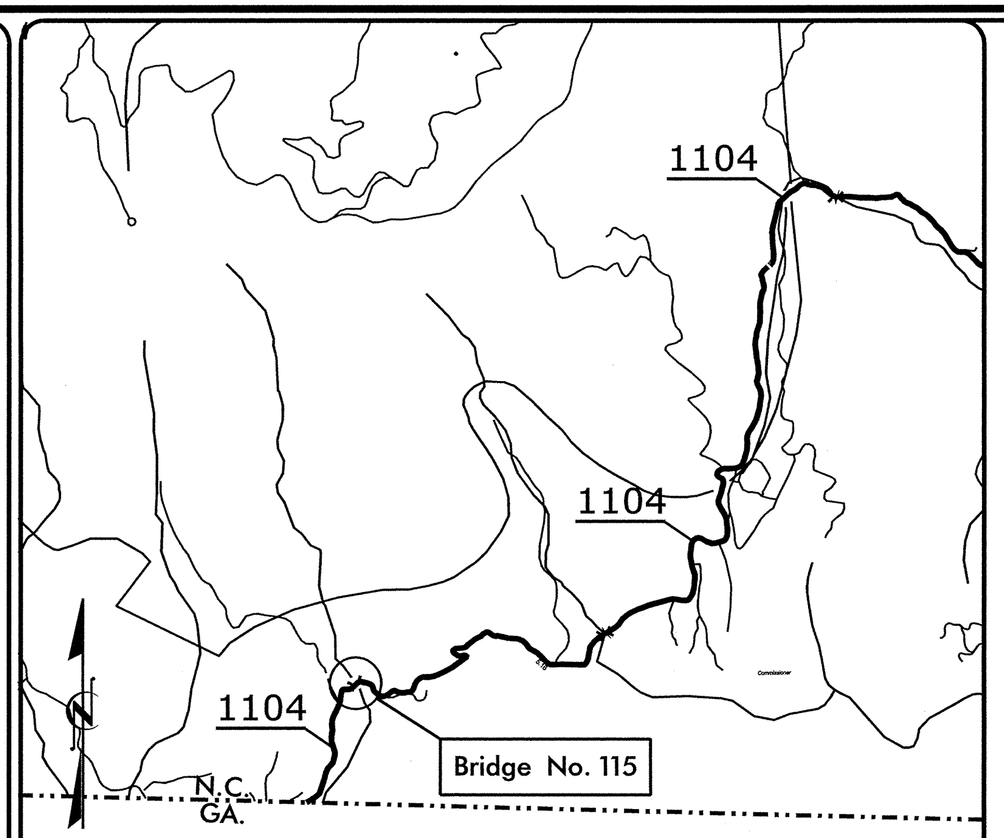

VICINITY MAP

See Sheet 1-A For Index of Sheets
See Sheet 1-B For Conventional Symbols

NAD 83/
NSRS 2007

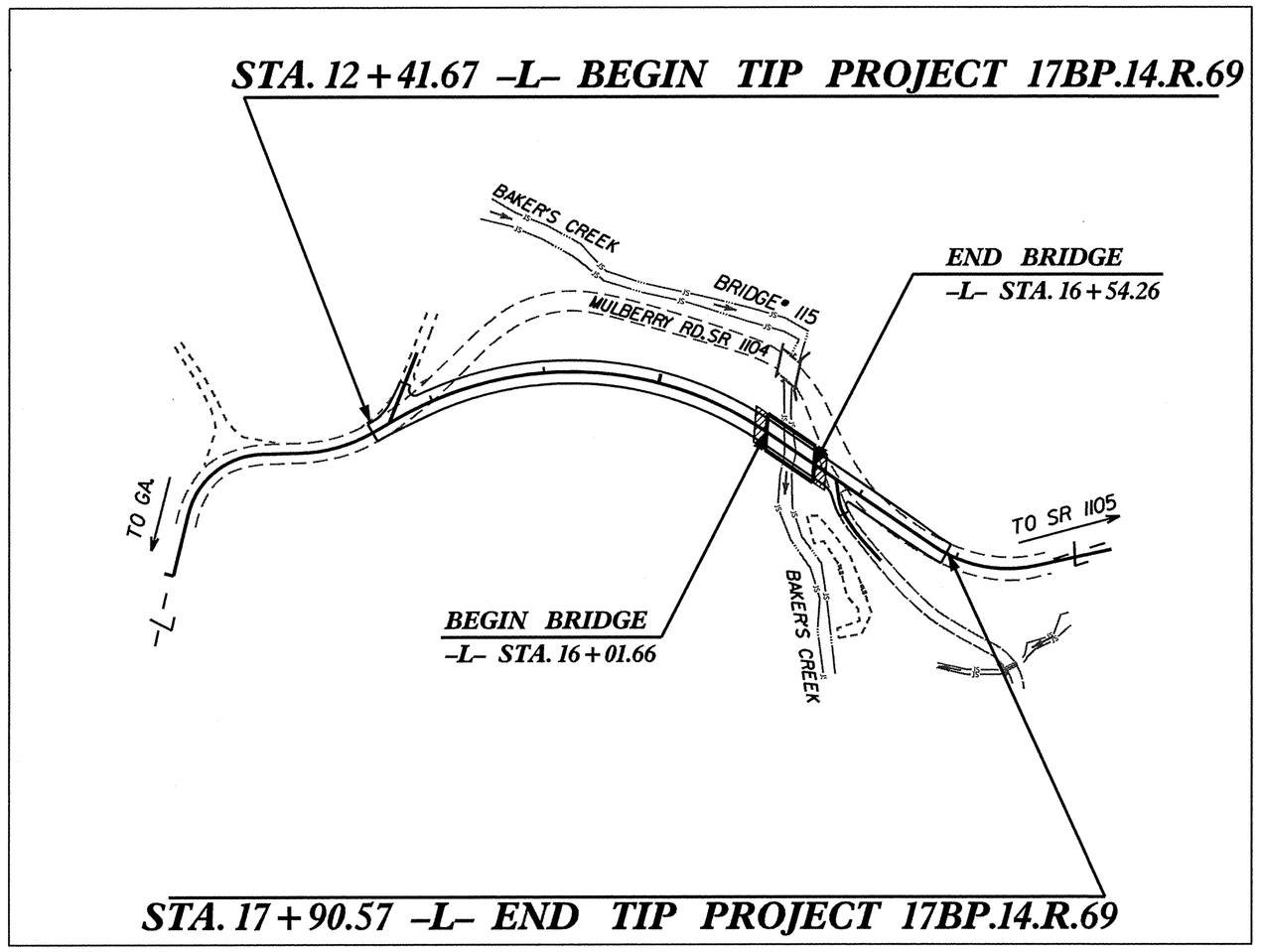

GRAPHIC SCALES

50 25 0 50 100
PLANS

50 25 0 50 100
PROFILE (HORIZONTAL)

10 5 0 10 20
PROFILE (VERTICAL)

DESIGN DATA

ADT = 310 (2008)

V = 25 MPH

FUNC CLASS =
LOCAL
SUB-REGIONAL TIER

PROJECT LENGTH

LENGTH ROADWAY TIP PROJECT 17BP.14.R.69	=	*0.094 MI*
LENGTH STRUCTURE TIP PROJECT 17BP.14.R.69	=	*0.010 MI*
TOTAL LENGTH TIP PROJECT 17BP.14.R.69	=	*0.104 MI*

NCDOT CONTACT: JOSHUA DEYTON, P.E.
PROJECT ENGINEER

Prepared In the Office of:
Mattern & Craig
CONSULTING ENGINEERS - SURVEYORS
12 BROAD STREET
ASHEVILLE, NORTH CAROLINA 28801
(828) 254-2201 - FAX (828) 254-4562

2012 STANDARD SPECIFICATIONS

RIGHT OF WAY DATE:
JULY 22, 2013

LETTING DATE:
FEBRUARY, 2014

JAMES B. VOSO, P.E.
PROJECT ENGINEER

DANA J. BOLDEN, P.E.
PROJECT DESIGN ENGINEER

HYDRAULICS ENGINEER

NORTH CAROLINA PROFESSIONAL SEAL 028945 ENGINEER DANA J. BOLDEN

SIGNATURE: P.E.

ROADWAY DESIGN ENGINEER

NORTH CAROLINA PROFESSIONAL SEAL 022529 ENGINEER JAMES B. VOSO

SIGNATURE: P.E.

DIVISION OF HIGHWAYS
STATE OF NORTH CAROLINA

STATE OF NORTH CAROLINA DEPARTMENT OF TRANSPORTATION

P.E.
STATE HIGHWAY DESIGN ENGINEER

1:20:11 PM
R:\3215\Bridge115\Roadway\Proj\17BP14R69_RDY_TSH.dgn
bgross

PROJECT REFERENCE NO.	SHEET NO.
17BP.14.R.69	1-A
ROADWAY DESIGN ENGINEER	PAVEMENT DESIGN ENGINEER

INDEX OF SHEETS – GENERAL NOTES – LIST OF STANDARDS

INDEX OF SHEETS

SHEET NUMBER	SHEET
1	Title Sheet
1–A	Index of Sheets, General Notes, and List of Standards
1–B	Conventional Symbols
1–C	Survey Control Sheet
2	Typical Sections, Pavement Schedule, and Wedging Detail
3	Summary of Quantities
3–A	Summary of Drainage Quantities, Summary of Guardrail, and Earthwork Summary
4	Plan Sheet
5	Profile Sheet
TMP–1 THRU TMP–4	Transportation Management Plans
PMP–01	Pavement Marking Plans
EC–1 THRU RF–2	Erosion Control Plans
UBO–1 THRU UBO–2	Utilities By Others Plans
X–1A	Cross–Section Summary Sheet
X–1 THRU X–5	Cross–Sections
TS–01	Structure Plans Title Sheet
S–01 THRU S–13	Structure Plans
SN	Structure Plans – Standard Notes Sheet

2012 ROADWAY ENGLISH STANDARD DRAWINGS

The following Roadway Standards as appear in "Roadway Standard Drawings" Highway Design Branch – N. C. Department of Transportation – Raleigh, N. C., Dated January, 2012 are applicable to this project and by reference hereby are considered a part of these plans:

STD.NO.	TITLE
DIVISION 2 – EARTHWORK	
200.02	Method of Clearing – Method II
225.02	Guide for Grading Subgrade – Secondary and Local
225.04	Method of Obtaining Superelevation – Two Lane Pavement
DIVISION 3 – PIPE CULVERTS	
300.01	Method of Pipe Installation
310.10	Driveway Pipe Construction
DIVISION 4 – MAJOR STRUCTURES	
422.11	Reinforced Bridge Approach Fills – Sub Regional Tier
DIVISION 5 – SUBGRADE, BASES AND SHOULDERS	
560.01	Method of Shoulder Construction – High Side of Superelevated Curve – Method I
DIVISION 8 – INCIDENTALS	
815.03	Pipe Underdrain and Blind Drain
862.01	Guardrail Placement
862.02	Guardrail Installation

GENERAL NOTES: 2012 SPECIFICATIONS

EFFECTIVE: 01–17–12
REVISED: 07/30/12

GRADE LINE:
GRADING AND SURFACING:

THE GRADE LINES SHOWN DENOTE THE FINISHED ELEVATION OF THE PROPOSED SURFACING AT GRADE POINTS SHOWN ON THE TYPICAL SECTIONS. GRADE LINES MAY BE ADJUSTED AT THEIR BEGINNING AND ENDING AND AT STRUCTURES AS DIRECTED BY THE ENGINEER IN ORDER TO SECURE A PROPER TIE–IN.

CLEARING:

CLEARING ON THIS PROJECT SHALL BE PERFORMED TO THE LIMITS ESTABLISHED BY METHOD II.

SUPERELEVATION:

ALL CURVES ON THIS PROJECT SHALL BE SUPERELEVATED IN ACCORDANCE WITH STD. NO. 225.04 USING THE RATE OF SUPERELEVATION AND RUNOFF SHOWN ON THE PLANS. SUPERELEVATION IS TO BE REVOLVED ABOUT THE GRADE POINTS SHOWN ON THE TYPICAL SECTIONS.

SHOULDER CONSTRUCTION:

ASPHALT, EARTH, AND CONCRETE SHOULDER CONSTRUCTION ON THE HIGH SIDE OF SUPERELEVATED CURVES SHALL BE IN ACCORDANCE WITH STD. NO. 560.01.

SIDE ROADS:

THE CONTRACTOR WILL BE REQUIRED TO DO ALL NECESSARY WORK TO PROVIDE SUITABLE CONNECTIONS WITH ALL ROADS, STREETS, AND DRIVES ENTERING THIS PROJECT. THIS WORK WILL BE PAID FOR AT THE CONTRACT UNIT PRICE FOR THE PARTICULAR ITEMS INVOLVED.

GUARDRAIL:

THE GUARDRAIL LOCATIONS SHOWN ON THE PLANS MAY BE ADJUSTED DURING CONSTRUCTION AS DIRECTED BY THE ENGINEER. THE CONTRACTOR SHOULD CONSULT WITH THE ENGINEER PRIOR TO ORDERING GUARDRAIL MATERIAL.

TEMPORARY SHORING:

SHORING REQUIRED FOR THE MAINTENANCE OF TRAFFIC WILL BE PAID FOR AS "EXTRA WORK" IN ACCORDANCE WITH SECTION 104–7.

SUBSURFACE PLANS:

SUBSURFACE PLANS ARE AVAILABLE FOR THE STRUCTURE AND ROADWAY.

END BENTS:

THE ENGINEER SHALL CHECK THE STRUCTURE END BENT PLANS, DETAILS, AND CROSS–SECTION PRIOR TO SETTING OF THE SLOPE STAKES FOR THE EMBANKMENT OR EXCAVATION APPROACHING A BRIDGE.

UTILITIES:

UTILITY OWNERS ON THIS PROJECT ARE DUKE ENERGY AND FRONTIER COMMUNICATION. ANY RELOCATION OF EXISTING UTILITIES WILL BE ACCOMPLISHED BY OTHERS.

RIGHT–OF–WAY MARKERS:

ALL RIGHT–OF–WAY MARKERS ON THIS PROJECT SHALL BE PLACED BY CONTRACT IN ACCORDANCE WITH SECTION 801 OF THE 2012 NORTH CAROLINA STANDARD SPECIFICATIONS FOR ROADS AND STRUCTURES.

6/2/99
10:24:09 AM
R:\3215\Bridge115\Roadway\Proj\17BP14R69_RDY_TYP.dgn
bpreas

PROJECT REFERENCE NO.	SHEET NO.
17BP.14.R.69	1-B

Note: Not to Scale

**S.U.E. = Subsurface Utility Engineering*

STATE OF NORTH CAROLINA
DIVISION OF HIGHWAYS

CONVENTIONAL PLAN SHEET SYMBOLS

BOUNDARIES AND PROPERTY:

- State Line
- County Line
- Township Line
- City Line
- Reservation Line
- Property Line
- Existing Iron Pin — EIP
- Property Corner
- Property Monument — ECM
- Parcel/Sequence Number — 123
- Existing Fence Line
- Proposed Woven Wire Fence
- Proposed Chain Link Fence
- Proposed Barbed Wire Fence
- Existing Wetland Boundary — WLB
- Proposed Wetland Boundary — WLB
- Existing High Quality Wetland Boundary — HQ WLB
- Existing Endangered Animal Boundary — EAB
- Existing Endangered Plant Boundary — EPB

BUILDINGS AND OTHER CULTURE:

- Gas Pump Vent or U/G Tank Cap
- Sign — S
- Well — W
- Small Mine
- Foundation
- Area Outline
- Cemetery
- Building
- School
- Church
- Dam

HYDROLOGY:

- Stream or Body of Water
- Hydro, Pool or Reservoir
- River Basin Buffer — RBB
- Flow Arrow
- Disappearing Stream
- Spring
- Swamp Marsh
- Proposed Lateral, Tail, Head Ditch — FLOW
- False Sump

RAILROADS:

- Standard Guage — CSX TRANSPORTATION
- RR Signal Milepost — MILEPOST 35
- Switch — SWITCH
- RR Abandoned
- RR Dismantled

RIGHT OF WAY:

- Baseline Control Point
- Existing Right of Way Marker
- Existing Right of Way Line
- Proposed Right of Way Line — RW
- Proposed Right of Way Line with Iron Pin and Cap Marker — RW
- Proposed Right of Way Line with Concrete or Granite Marker — RW
- Existing Control of Access — CA
- Proposed Control of Access — CA
- Existing Easement Line — E
- Proposed Temporary Construction Easement — E
- Proposed Temporary Drainage Easement — TDE
- Proposed Permanent Drainage Easement — PDE
- Proposed Permanent Utility Easement — PUE

ROADS AND RELATED FEATURES:

- Existing Edge of Pavement
- Existing Curb
- Proposed Slope Stakes Cut — C
- Proposed Slope Stakes Fill — F
- Proposed Wheel Chair Ramp — WCR
- Curb Cut for Future Wheel Chair Ramp — CCFR
- Existing Metal Guardrail
- Proposed Guardrail
- Existing Cable Guiderail
- Proposed Cable Guiderail
- Equaility Symbol
- Pavement Removal

VEGETATION:

- Single Tree
- Single Shrub
- Hedge
- Woods Line
- Orchard
- Vineyard — Vineyard

EXISTING STRUCTURES:

MAJOR:

- Bridge, Tunnel or Box Culvert — CONC
- Bridge Wing Wall, Head Wall and End Wall — CONC WW

MINOR:

- Head and End Wall — CONC HW
- Pipe Culvert
- Footbridge
- Drainage Box: Catch Basin, DI or JB — CB
- Paved Ditch Gutter
- Storm Sewer Manhole — S
- Storm Sewer — S

UTILITIES:

POWER:

- Existing Power Pole
- Proposed Power Pole
- Existing Joint Use Pole
- Proposed Joint Use Pole
- Power Manhole — P
- Power Line Tower
- Power Transformer
- U/G Power Cable Hand Hole — HH
- H-Frame Pole
- Recorded U/G Power Line — P
- Designated U/G Power Line (S.U.E.*) — P

TELEPHONE:

- Existing Telephone Pole
- Proposed Telephone Pole
- Telephone Manhole — T
- Telephone Booth
- Telephone Pedestal — T
- Telephone Cell Tower
- U/G Telephone Cable Hand Hole — HH
- Recorded U/G Telephone Cable — T
- Designated U/G Telephone Cable (S.U.E.*) — T
- Recorded U/G Telephone Conduit — TC
- Designated U/G Telephone Conduit (S.U.E.*) — TC
- Recorded U/G Fiber Optics Cable — T FO
- Designated U/G Fiber Optics Cable (S.U.E.*) — T FO

WATER:

- Water Manhole — W
- Water Meter
- Water Valve
- Water Hydrant
- Recorded U/G Water Line — W
- Designated U/G Water Line (S.U.E.*) — W
- Above Ground Water Line — A/G Water

TV:

- TV Satellite Dish
- TV Pedestal — C
- TV Tower
- U/G TV Cable Hand Hole — HH
- Recorded U/G TV Cable — TV
- Designated U/G TV Cable (S.U.E.*) — TV
- Recorded U/G Fiber Optic Cable — TV FO
- Designated U/G Fiber Optic Cable (S.U.E.*) — TV FO

GAS:

- Gas Valve
- Gas Meter
- Recorded U/G Gas Line — G
- Designated U/G Gas Line (S.U.E.*) — G
- Above Ground Gas Line — A/G Gas

SANITARY SEWER:

- Sanitary Sewer Manhole
- Sanitary Sewer Cleanout
- U/G Sanitary Sewer Line — SS
- Above Ground Sanitary Sewer — A/G Sanitary Sewer
- Recorded SS Forced Main Line — FSS
- Designated SS Forced Main Line (S.U.E.*) — FSS

MISCELLANEOUS:

- Utility Pole
- Utility Pole with Base
- Utility Located Object
- Utility Traffic Signal Box — S
- Utility Unknown U/G Line — ?UTL
- U/G Tank; Water, Gas, Oil
- A/G Tank; Water, Gas, Oil
- U/G Test Hole (S.U.E.*)
- Abandoned According to Utility Records — AATUR
- End of Information — E.O.I.

PROJECT REFERENCE NO.	SHEET NO.
17BPJ4.R.69	1-C

SURVEY CONTROL SHEET 17BP.14.R.69

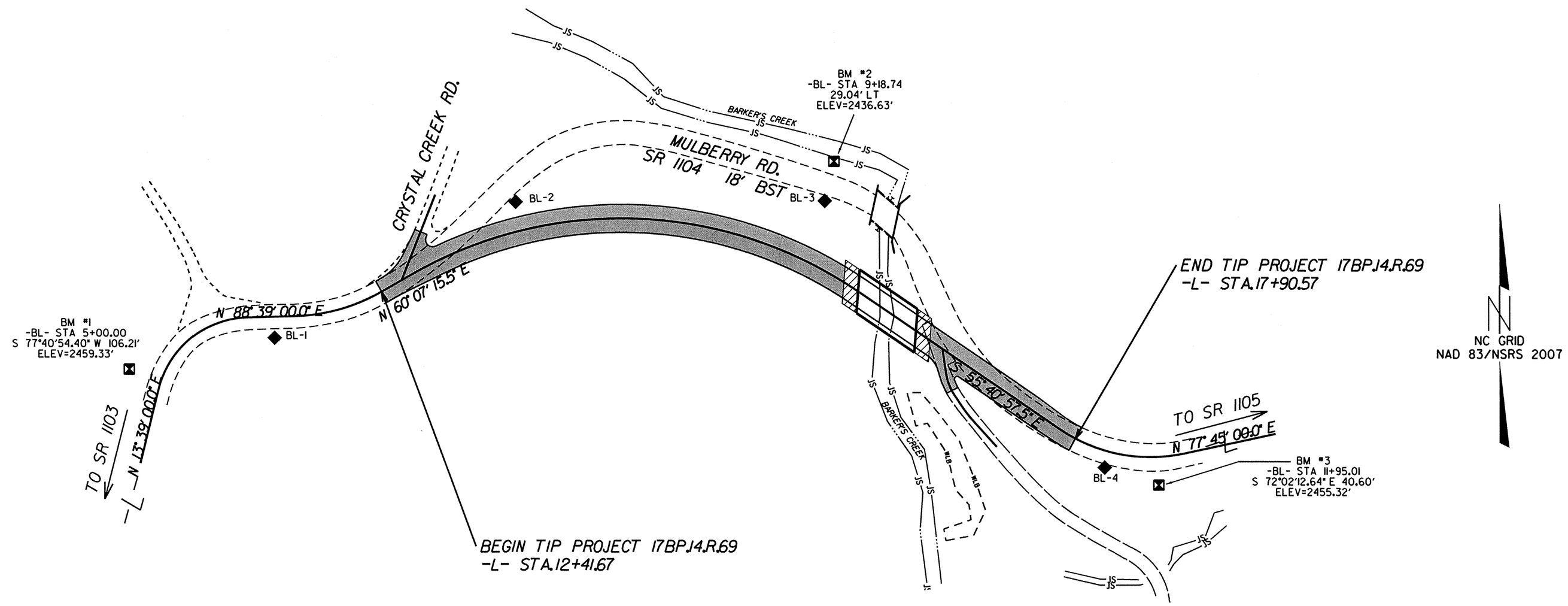

BL

POINT	DESC.	NORTH	EAST	ELEVATION	EL STATION	OFFSET
1	BL-1	484357.9191	672208.8390	2448.35	11+06.94	15.84 RT
2	BL-2	484455.2716	672380.9701	2441.97	13+00.90	12.31 RT
3	BL-3	484455.9429	672601.9555	2435.21	15+50.77	12.45 RT
4	BL-4	484265.3760	672801.9745	2449.44	18+38.55	11.75 RT

BM1 ELEVATION = 2459.33'
N 484335 E 672105
BL STATION 5+00.00
S 77°40'54.40" W DIST 106.21'
RR SPIKE SET IN BASE POWER POLE

BM2 ELEVATION = 2436.63'
N 484484 E 672609
BL STATION 9+18.74 29.04' LEFT
RR SPIKE SET IN BASE 12" LOCUST

BM3 ELEVATION = 2455.32'
N 484253 E 672841
BL STATION 11+95.01
S 72°02'12.64" E DIST 40.60'
RR SPIKE SET IN BASE POWER POLE

DATUM DESCRIPTION

THE LOCALIZED COORDINATE SYSTEM DEVELOPED FOR THIS PROJECT IS BASED ON THE STATE PLANE COORDINATES ESTABLISHED BY NCDOT FOR MONUMENT "550115 BL-1"
WITH NAD 83/NSRS 2007 STATE PLANE GRID COORDINATES OF
NORTHING: 484357.9191(ft) EASTING: 672208.8390(ft)
ELEVATION: 2448.35(ft)
THE AVERAGE COMBINED GRID FACTOR USED ON THIS PROJECT (GROUND TO GRID) IS: 0.99976961
THE N.C. LAMBERT GRID BEARING AND LOCALIZED HORIZONTAL GROUND DISTANCE FROM "550115 BL-1" TO -L- STATION 10+00 IS
S46°46'20"W 131.6198'
ALL LINEAR DIMENSIONS ARE LOCALIZED HORIZONTAL DISTANCES
VERTICAL DATUM USED IS NAVD 88

Scale 1" = 50'
50' 0 50' 100'

STRUCTURE: 550115
COUNTY: MACON

5/14/99

10:26:12 AM
Bridge115\Roadway\Proj\17BP14R69_LS_PSH.dgn
Impress

PROJECT REFERENCE NO.	SHEET NO.
17BP.14.R.69	2

ROADWAY DESIGN ENGINEER — NORTH CAROLINA PROFESSIONAL SEAL 022569 ENGINEER JAMES B. VOSS

PAVEMENT DESIGN ENGINEER — NORTH CAROLINA PROFESSIONAL SEAL 022569 ENGINEER JAMES B. VOSS

PLANS PREPARED BY:

Mattern & Craig
CONSULTING ENGINEERS - SURVEYORS
12 BROAD STREET
ASHEVILLE, NORTH CAROLINA 28801
(828) 254-2201 - FAX (828) 254-4562

PAVEMENT SCHEDULE

ITEM	DESCRIPTION	ITEM	DESCRIPTION
C1	PROP. APPROX. 3" ASPHALT CONCRETE SURFACE COURSE, TYPE S9.5B, AT AN AVERAGE RATE OF 168 LBS. PER SQ. YD. IN EACH OF 2 LAYERS.	E2	PROP. VAR. DEPTH ASPHALT CONCRETE BASE COURSE, TYPE B25.0B, AT AN AVERAGE RATE OF 114 LBS. PER SQ. YD. PER 1" DEPTH TO BE PLACED IN LAYERS NOT LESS THAN 3" IN DEPTH OR GREATER THAN 5½" IN DEPTH.
C2	PROP. APPROX. 3¾" ASPHALT CONCRETE SURFACE COURSE, TYPE S9.5B, AT AN AVERAGE RATE OF 210 LBS. PER SQ. YD. IN EACH OF 2 LAYERS.	T	EARTH MATERIAL.
C3	PROP. VARIABLE DEPTH S9.5B ASPHALT CONCRETE SURFACE COURSE, AT AN AVERAGE RATE OF 112 LBS PER SY. YD. AT 1" DEPTH. TO BE PLACED IN LAYERS NOT TO EXCEED 2" IN DEPTH.	U	EXISTING PAVEMENT.
E1	PROP. APPROX. 5" ASPHALT CONCRETE BASE COURSE, TYPE B25.0B, AT AN AVERAGE RATE OF 570 LBS. PER SQ. YD.	W	WEDGING (SEE DETAIL 1 THIS SHEET).
J1	PROP. 8" AGGREGATE BASE COURSE		

NOTE: ALL PAVEMENT EDGE SLOPES ARE TO BE 1:1

Detail 1 Showing Method of Wedging

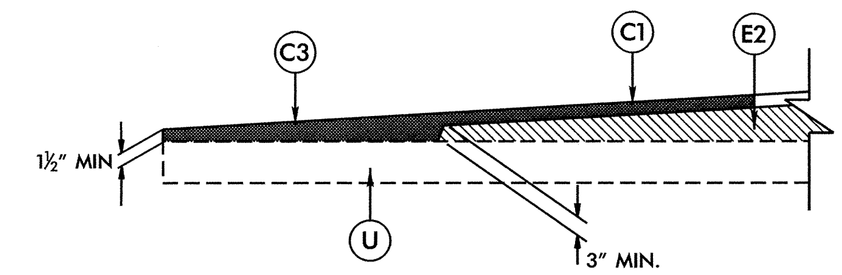

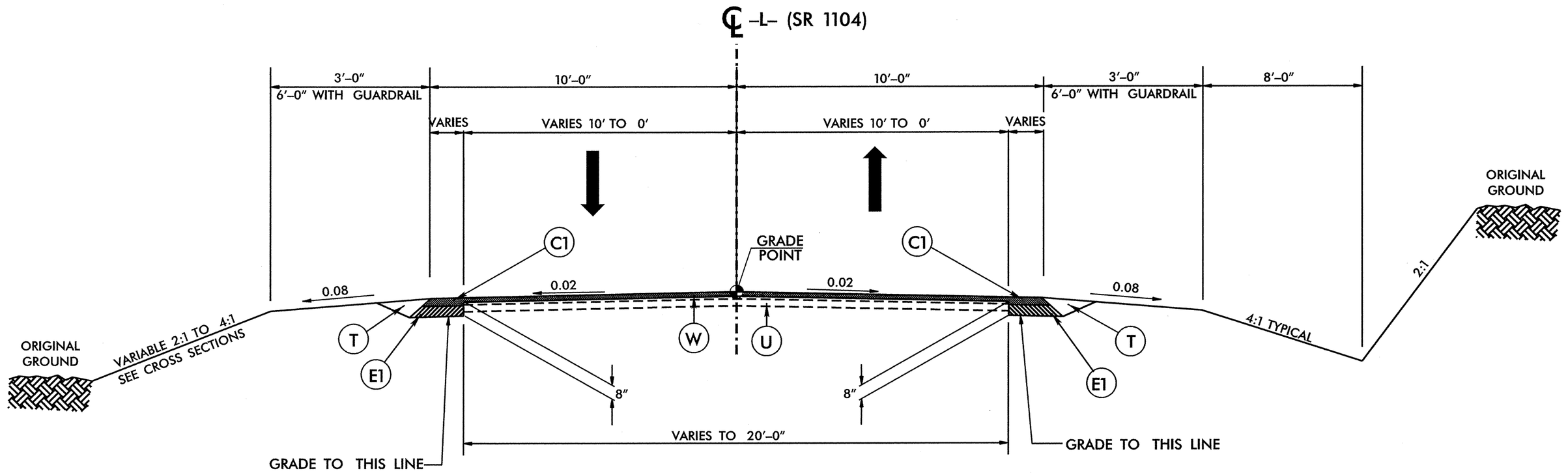

TYPICAL SECTION NO. 1

USE TYPICAL SECTION No. 1

-L- STA. 12+41.67 TO STA. 13+00.00
-L- STA. 17+20.00 TO STA. 17+65.00
-L- STA. 17+65.00 TO STA. 17+90.57 (Transition to Existing)

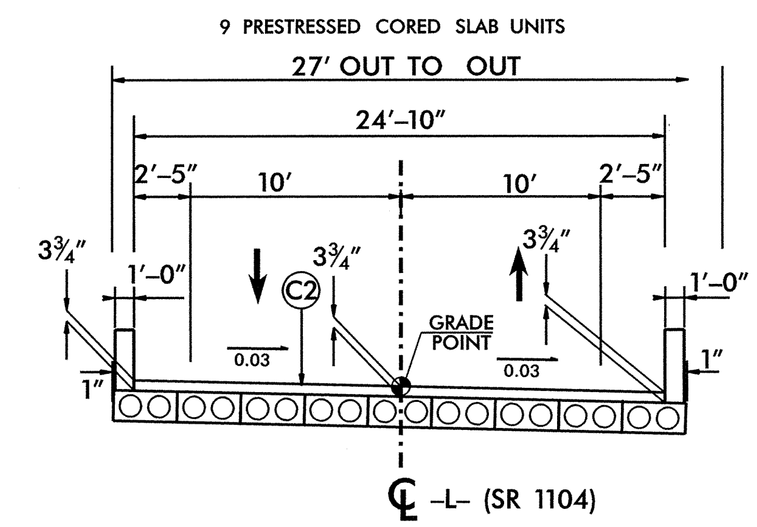

TYPICAL SECTION ON BRIDGE

-L- STA. 16+01.66 (BEGIN BRIDGE) TO 16.54.26 (END BRIDGE)

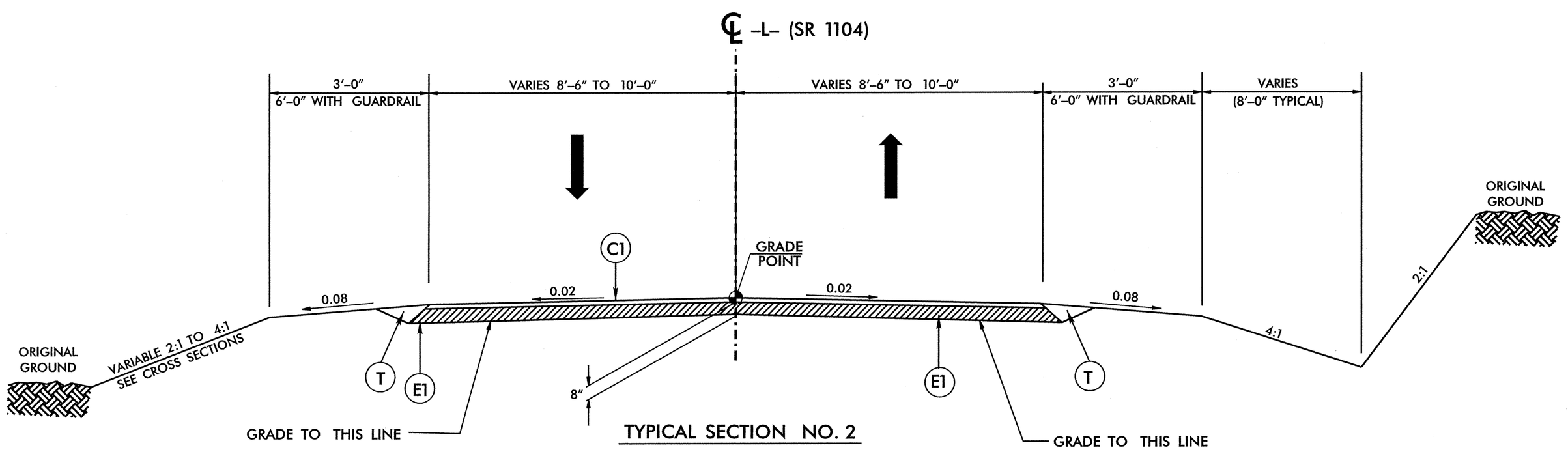

TYPICAL SECTION NO. 2

USE TYPICAL SECTION No. 2

-L- STA. 13+00.00 TO STA. 16+01.66 (Begin Bridge)
-L- STA. 16+54.26 (End of Bridge) TO STA. 17+20.00

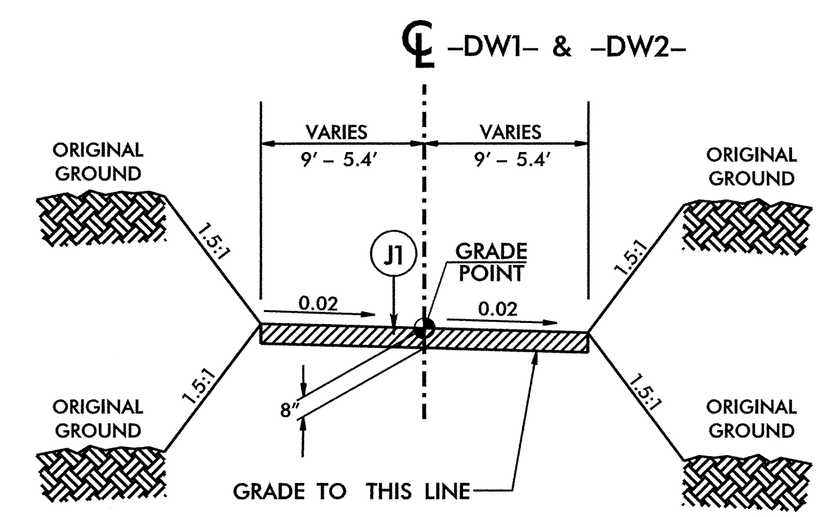

TYPICAL DRIVEWAY SECTION

-DW1- STA. 10+16.00 TO STA. 10+37.00
-DW2- STA. 10+15.00 TO STA. 10+31.00

6/2/99

130254 PM
H:\3215\Bridge115\Roadway\Proj\17BP14R69_RDY_TYP.dgn

PROJECT REFERENCE NO.	SHEET NO.
17BP.14.R.69	3

SUMMARY OF QUANTITIES

TYPE	ITEM NUMBER	Sec No.	Description	Quantity	Unit
			Roadway		
M	0000100000-N	800	MOBILIZATION	1	LS
M	0000400000-N	801	CONSTRUCTION SURVEYING	1	LS
G	0050000000-E	226	SUPPLEMENTARY CLEARING & GRUBBING	1	ACR
G	0043000000-N	226	GRADING	1.00	LS
			UNCLASSIFIED EXCAVATION	400.00	CY
			BORROW EXCAVATION	700.00	CY
			REMOVAL OF EXISTING ASPHALT PAVEMENT	1,300.00	SY
			FINE GRADING	5,000.00	SY
G	0057000000-E	226	UNDERCUT EXCAVATION	50.00	CY
G	0195000000-E	265	SELECT GRANULAR MATERIAL	50.00	CY
D	0318000000-E	300	FOUNDATION CONDITIONING MATERIAL,MINOR STRUCTURES	10.00	TON
D	0320000000-E	300	FOUNDATION CONDITIONING GEOTEXTILE	20.00	SY
D	0343000000-E	310	15" SIDE DRAIN PIPE	36.00	LF
P	1121000000-E	520	AGGREGATE BASE COURSE	21.00	TON
G	1220000000-E	545	INCIDENTAL STONE BASE	50.00	TON
P	1489000000-E	610	ASPHALT CONC BASE COURSE, TYPE B25.0B	250.00	TON
P	1519000000-E	610	ASPHALT CONC SURFACE COURSE, TYPE S9.5B	220.00	TON
P	1575000000-E	620	ASPHALT BINDER FOR PLANT MIX	26.00	TON
GR	3030000000-E	862	STEEL BM GUARDRAIL	25.00	LF
GR	3045000000-E	862	STEEL BM GUARDRAIL, SHOP CURVED	25.00	LF
GR	3150000000-N	862	ADDITIONAL GUARDRAIL POSTS	10.00	EA
GR	3165000000-N	SP	GUARDRAIL ANCHOR UNITS, TYPE 350 (TL-2)	1.00	EA
GR	3215000000-N	862	GUARDRAIL ANCHOR UNITS, TYPE III	4.00	EA
F	3572000000-E	867	GENERIC FENCING ITEM - REPLACE 2S ELECTRIC FENCE	300.00	LF
G	3635000000-E	876	RIP RAP, CLASS II	125.00	TON
D	3656000000-E	876	GEOTEXTILE FOR DRAINAGE	200.00	SY
L	6084000000-E	1660	SEEDING & MULCHING	1.00	ACR
			Erosion Control		
D	3656000000-E	876	GEOTEXTILE FOR DRAINAGE	90.00	SY
L	6000000000-E	1605	TEMPORARY SILT FENCE	1,200.00	LF
L	6009000000-E	1610	EROSION CONTROL STONE, CLASS B	480.00	TON
L	6012000000-E	1610	SEDIMENT CONTROL STONE	215.00	TON
L	6015000000-E	1615	TEMPORARY MULCHING	1.00	ACR
L	6018000000-E	1620	SEED FOR TEMPORARY SEEDING	50.00	LB
L	6021000000-E	1620	FERTILIZER FOR TEMPORARY SEEDING	0.25	TON
L	6024000000-E	1622	TEMPORARY SLOPE DRAINS	200.00	LF
L	6029000000-E	SP	SAFETY FENCE	100.00	LF
L	6030000000-E	1630	SILT EXCAVATION	470.00	CY
L	6036000000-E	1631	MATTING FOR EROSION CONTROL:	3500.00	SY
L	6038000000-E	SP	PERMANENT SOIL REINFORCEMENT MAT	120.00	SY
L	6042000000-E	1632	1/4" HARDWARE CLOTH	460.00	LF
L	6071020000-E	SP	POLYACRYLAMIDE (PAM)	55.00	LB
L	6084000000-E	1660	SEEDING AND MULCHING	3.00	ACR
L	6090000000-E	1661	SEED FOR REPAIR SEEDING	50.00	LB
L	6093000000-E	1661	FERTILIZER FOR REPAIR SEEDING	0.25	TON
L	6096000000-E	1662	SEED FOR SUPPLEMENTAL SEEDING	50.00	LB
L	6108000000-E	1665	FERTILIZER TOPDRESSING	0.75	TON
L	6117000000-N	SP	RESPONSE FOR EROSION CONTROL	6.00	EA
L	6126000000-E	SP	STREAMBANK REFORESTATION	0.50	ACR
			Traffic Management		
Y	4405000000-E	1110	WORK ZONE SIGNS (PORTABLE)	204.00	SF
Y	4430000000-N	1110	DRUMS	14.00	EA
Y	4410000000-E	1130	WORK ZONE SIGNS (BARRICADE MOUNTED)	20.00	SF
Y	4445000000-E	1160	BARRICADES (TYPE III)	48.00	LF
Y	4455000000-N	1160	FLAGGER	4.00	DAY
			Pavement Marking		
PM	4810000000-E	1205	PAINT PAVEMENT MARKING LINES (4")	5100.00	LF
PM	4835000000-E	1205	PAINT PAVEMENT MARKING LINES (24")	20.00	LF
PM	4850000000-E	1205	REMOVAL OF PAVEMENT MARKING LINES (4")	620.00	LF
PM	4870000000-E	1205	REMOVAL OF PAVEMENT MARKING LINES (24")	20.00	LF
			Temporary Signal		
Z	7980000000-N	SP	Portable Traffic Signal System (Actuated)	2.00	EA
			Structures		
G	0030000000-N	SP	BRIDGE APPROACH FILL - SUBREGIONAL TIER AT STATION	1	LS
B	8035000000-N	402	REMOVAL OF EXISTING STRUCTURE AT STATION	1	LS
B	8121000000-N	412	UNCLASSIFIED STRUCTURE EXCAVATION AT STATION	1	LS
B	8182000000-E	420	CL A CONC (BRG)	41.80	CY
B	8210000000-N	422	BRIDGE APPROACH SLABS, STATION	1	LS
B	8217000000-E	425	REINFORCING STEEL (BRIDGE)	5168.00	LBS
B	8364000000-E	450	HP12X53 STL PILES	295.00	LF
B	8391000000-N	450	STL PILE POINTS	10.00	EA
B	8503000000-E	460	VERTICAL CONC BARRIER RAIL	100.29	LF
B	8608000000-E	876	RIP RAP CLASS II (2'-0" THICK)	120.00	Tons
B	8622000000-E	876	GEOTEXTILE FOR DRAINAGE	134.00	SY
B	8657000000-N	430	ELASTOMERIC BEARINGS	1	LS
B	8881000000-E	430	3'-0" X 1'-9" PRESTRESSED CONCRETE CORED SLABS	450.00	LF

I38441 RW
K32215 Bridge115\Roadway\Proj\17BP14R69_RDY_TYP.dgn
bpcass

COMPUTED BY: BGR DATE: 12-21-12
CHECKED BY: JBV DATE: 12-21-12

6/21/00

PROJECT REFERENCE NO. 17BP.14.R.69 SHEET NO. 3-A

STATE OF NORTH CAROLINA
DIVISION OF HIGHWAYS
GUARDRAIL SUMMARY

"N" = DISTANCE FROM EDGE OF LANE TO FACE OF GUARDRAIL.
TOTAL SHOULDER WIDTH = DISTANCE FROM EDGE OF TRAVEL LANE TO SHOULDER BREAK POINT.
FLARE LENGTH = DISTANCE FROM LAST SECTION OF PARALLEL GUARDRAIL TO END OF GUARDRAIL.
W = TOTAL WIDTH OF FLARE FROM BEGINNING OF TAPER TO END OF GUARDRAIL.
G = GATING IMPACT ATTENUATOR TYPE 350
NG = NON-GATING IMPACT ATTENUATOR TYPE 350

SURVEY LINE	BEG. STA.	END STA.	LOCATION	LENGTH STRAIGHT	LENGTH SHOP CURVED	LENGTH DOUBLE FACED	WARRANT POINT APPROACH END	WARRANT POINT TRAILING END	"N" DIST. FROM E.O.L.	TOTAL SHOUL. WIDTH	FLARE LENGTH APPROACH END	FLARE LENGTH TRAILING END	W APPROACH END	W TRAILING END	ANCHORS XI MOD	ANCHORS XI	ANCHORS GRAU 350 TYPE TL-2	ANCHORS M-350	ANCHORS TYPE III	ANCHORS CAT-1	ANCHORS VI MOD	ANCHORS BIC	ANCHORS AT-1	IMPACT ATTENUATOR TYPE 350 EA	G	NG	SINGLE FACED GUARDRAIL	REMOVE EXISTING GUARDRAIL	REMOVE AND STOCKPILE EXISTING GUARDRAIL	REMARKS
-L-	15+46.12	15+96.12	LT	50.00				BRIDGE	2.42	6	31.25		0.625				1		1											
-L-	15+60.13	16+10.13	RT	50.00				BRIDGE	2.42	6	31.25		0.625				1		1											
-L-	16+47.16	16+97.16	LT	50.00			BRIDGE		2.42	6		31.25		0.625			1		1											
-L-	16+61.42	16+92.66	RT	20.00	20.00		BRIDGE		2.42	6									1				1							
			TOTAL	170.00													3		4				1							
		DEDUCT ANCHORS	TYPE III – 18.75	-75																										
			GRAU 350 TYPE TL-2 – 25.00	-75																										
			AT-1 – 6.25	-6.25																										
			TOTAL	13.75	20.00																									
ADDITIONAL GUARDRAIL POSTS = 10			SAY	25.00	25.00												3		4				1							

LIST OF PIPES, ENDWALLS, ETC. (FOR PIPES 48" & UNDER)

STATION	LOCATION (LT,RT, OR CL)	STRUCTURE NO. FROM	STRUCTURE NO. TO	TOP ELEVATION	INVERT ELEVATION	INVERT ELEVATION	SLOPE CRITICAL	DRAINAGE PIPE (RCP, CSP, CAAP, HDPE, or PVC) 12"	15"	18"	24"	30"	36"	42"	48"	C.S. PIPE (UNLESS NOTED OTHRWISE) 12" .064	15" .064	18" .064	24" .064	30" .079	36" .079	42" .109	48" .109	CLASS III R.C. PIPE (UNLESS OTHERWISE NOTED) 12"	15"	18"	24"	30"	36"	42"	48"	15" SIDE DRAIN PIPE	18" SIDE DRAIN PIPE	24" SIDE DRAIN PIPE	ENDWALLS STD. 838.01, STD. 838.11 OR STD. 838.80 (UNLESS NOTED OTHERWISE) CU. YDS. R.C.P.	C.S.P.	QUANTITIES FOR DRAINAGE STRUCTURES PER EACH (0' THRU 5.0')	LIN. *FT. A 5.0' THRU 10.0'	LIN. *FT. B 10.0' AND ABOVE	C.B. STD. 840.01 OR STD. 840.02	FRAME, GRATES AND HOOD STANDARD 840.03 TYPE OF GRATE E	F	G	D.I. STD. 840.14 OR STD. 840.15	D.I. FRAME & GRATE STD. 840.16	G.D.I. TYPE "A" STD. 840.17 OR 840.26	G.D.I. TYPE "B" STD. 840.18 OR 840.27	G.D.I. TYPE "D" STD. 840.19 OR 840.28	G.D.I. FRAME WITH GRATE STD. 840.22	G.D.I. FRAME WITH TWO GRATES STD. 840.22	G.D.I. (N.S.) FRAME WITH GRATE STD. 840.24	G.D.I. (N.S.) FRAME WITH TWO GRATES STD. 840.24	J.B. STD. 840.31 OR 840.32	CORR. STEEL ELBOWS NO. & SIZE	CONC. COLLARS CL. "B" C.Y. STD 840.72	CONC. & BRICK PIPE PLUG, C.Y. STD. 840.71	PIPE REMOVAL LIN.FT.	REMARKS
-L- 12+63	RT				2443.32	2441.99																										36																										
-L- 12+59	RT																																																								40	REMOVE EXISTING 15" SIDE DRAIN PIPE

* TOTAL L.F. FOR PAY QUANTITY SHALL BE COL. 'A' + (1.3 X COL.'B')

ABBREVIATIONS
- C.B. CATCH BASIN
- N.D.I. NARROW DROP INLET
- D.I. DROP INLET
- G.D.I. GRATED DROP INLET
- G.D.I. (N.S.) GRATED DROP INLET (NARROW SLOT)
- J.B. JUNCTION BOX
- M.H. MANHOLE
- T.B.D.I. TRAFFIC BEARING DROP INLET
- T.B.J.B. TRAFFIC BEARING JUNCTION BOX

Note: Invert elevations are for bid purposes only. Contractor to field verify all existing and proposed elevations

PAVEMENT REMOVAL SUMMARY

SURVEY LINE	STATION	STATION	LOCATION LT/RT/CL	YD^2
-EL-	11+87	18+05	CL	1,236
			TOTAL:	1,236
			SAY:	1,300

Approximate quantities only. Unclassified excavation, borrow excavation, shoulder borrow, fine grading, clearing and grubbing, breaking of existing pavement and removal of existing pavement will be paid for at the lump sum price for "Grading".

SUMMARY OF EARTHWORK IN CUBIC YARDS

LOCATION	UNCLASSIFIED EXCAVATION	UNDERCUT	EMBT+%	BORROW	WASTE
-L- 12+41.67 TO -L- 12+50	6		0	0	6
-L- 12+50 TO 13+00	74		3	0	71
-L- 13+00 TO 13+50	61		32	0	29
-L- 13+50 TO 14+00	41		55	14	0
-L- 14+00 TO 14+50	41		71	30	0
-L- 14+50 TO 15+00	39		101	62	0
-L- 15+00 TO 15+50	41		201	160	0
-L- 15+50 TO 16+00	30		332	302	0
-L- 16+00 TO 16+50	15		207	192	0
-L- 16+50 TO 17+00	10		50	40	0
-L- 17+00 TO 17+50	17		31	14	0
-L- 17+50 TO 17+90.57	11		2	0	9
TOTALS	386		1,444	814	115
EARTH WASTE TO REPLACE BORROW				-115	-115
GRAND TOTAL	386			699	
SAY	400			700	
ESTIMATED:					
UNDERCUT EXCAVATION = 50					
SELECT GRANULAR MATIERIAL = 50					
INCIDENTAL STONE BASE = 50					

10:28:22 AM
R:\3215\Bridge115\Roadway\Proj\17BP14R69_RDY_TYP.dgn
baross

PROJECT REFERENCE NO.	SHEET NO.
17BP.14.R.69	4
R/W SHEET NO.	

ROADWAY DESIGN ENGINEER — NORTH CAROLINA PROFESSIONAL SEAL 022269 ENGINEER JAMES B. VOSO

HYDRAULICS ENGINEER — NORTH CAROLINA PROFESSIONAL SEAL 028945 ENGINEER DANA J. BOLDEN

Prepared in the Office of:
Mattern & Craig
CONSULTING ENGINEERS - SURVEYORS
12 BROAD STREET
ASHEVILLE, NORTH CAROLINA 28801
(828) 254-2201 - FAX (828) 254-4562

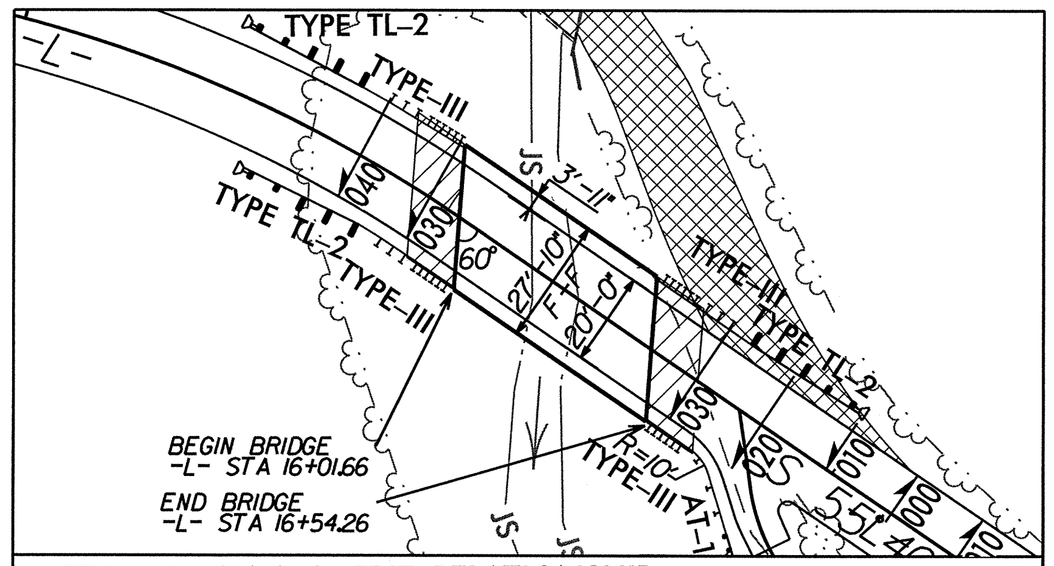

SKETCH SHOWING THE RELATIONSHIP OF THE BRIDGE TO THE PAVEMENT

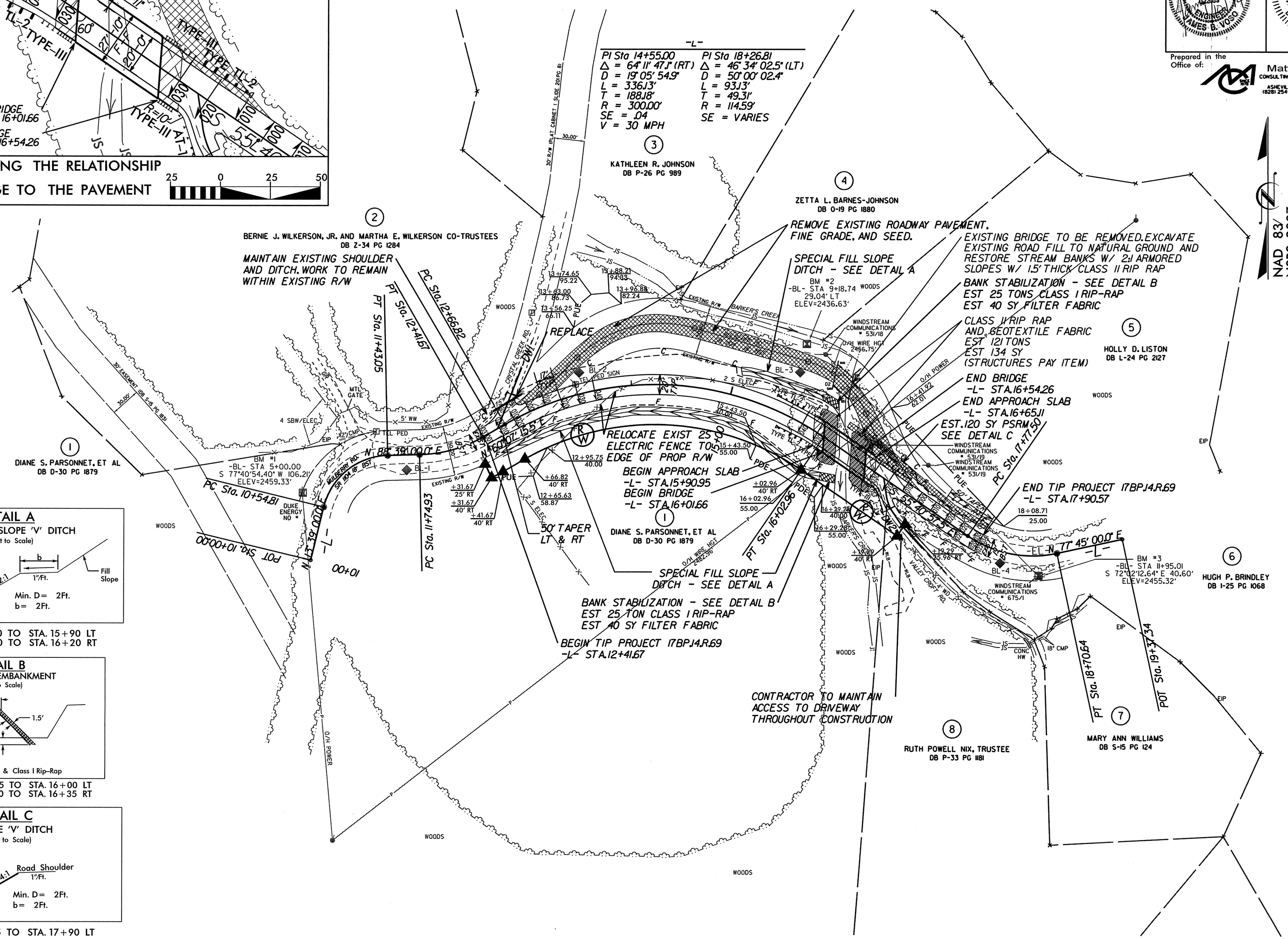

DETAIL A
SPECIAL FILL SLOPE 'V' DITCH
(Not to Scale)

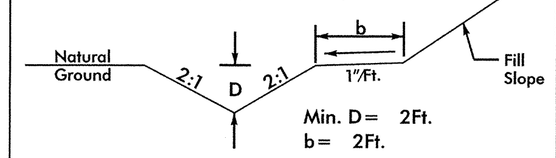

Min. D = 2Ft.
b = 2Ft.

FROM -L- STA. 15+10 TO STA. 15+90 LT
FROM -L- STA. 12+50 TO STA. 16+20 RT

DETAIL B
RIP RAP AT EMBANKMENT
(Not to Scale)

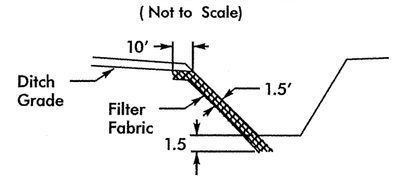

Type of Liner= Filter Fabric & Class I Rip-Rap

FROM -L- STA. 15+85 TO STA. 16+00 LT
FROM -L- STA. 16+20 TO STA. 16+35 RT

DETAIL C
ROADSIDE 'V' DITCH
(Not to Scale)

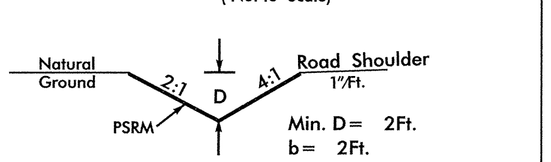

Min. D = 2Ft.
b = 2Ft.

FROM -L- STA. 16+35 TO STA. 17+90 LT

5/14/99

\3215\Bridge\15\Roadway\Proj\17BP14R69_RDY_PSH.dgn 12:39:23 PM

PROJECT REFERENCE NO.	SHEET NO.
17BP14R.69	5

ROADWAY DESIGN ENGINEER

NORTH CAROLINA PROFESSIONAL SEAL 022599 ENGINEER JAMES B. VOSCO

HYDRAULICS ENGINEER

NORTH CAROLINA PROFESSIONAL SEAL 028945 ENGINEER DANA J. BOLDEN

Prepared in the Office of:

Mattern & Craig
CONSULTING ENGINEERS - SURVEYORS
12 BROAD STREET
ASHEVILLE, NORTH CAROLINA 28801
(828) 254-2201 - FAX (828) 254-4562

5/14/99

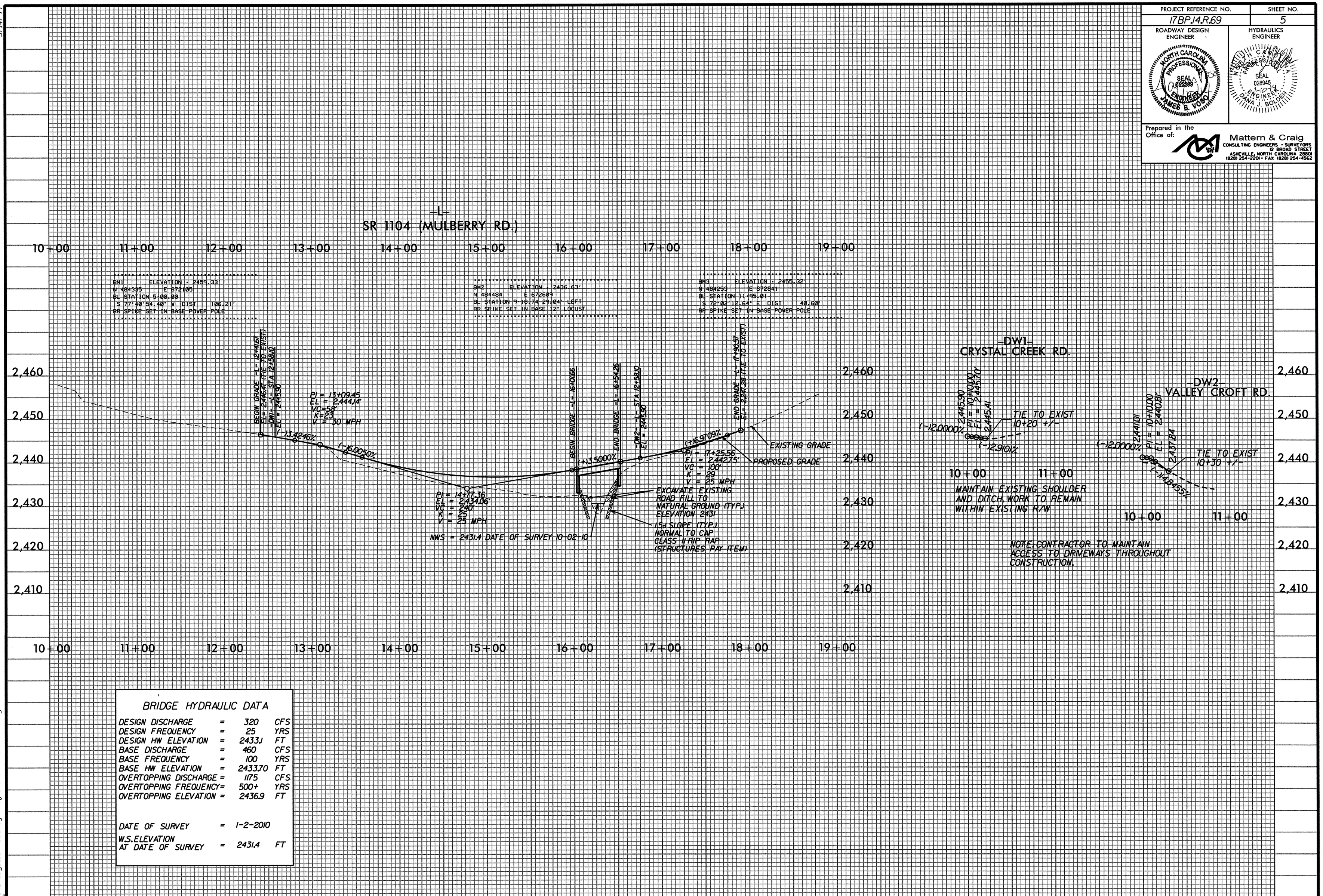

BRIDGE HYDRAULIC DATA

DESIGN DISCHARGE	=	320	CFS
DESIGN FREQUENCY	=	25	YRS
DESIGN HW ELEVATION	=	2433.1	FT
BASE DISCHARGE	=	460	CFS
BASE FREQUENCY	=	100	YRS
BASE HW ELEVATION	=	2433.70	FT
OVERTOPPING DISCHARGE	=	1175	CFS
OVERTOPPING FREQUENCY	=	500+	YRS
OVERTOPPING ELEVATION	=	2436.9	FT
DATE OF SURVEY	=	1-2-2010	
W.S. ELEVATION AT DATE OF SURVEY	=	2431.4	FT

10:05:44 AM
R:\3215\Bridge115\Roadway\Proj\17BP14R69_RDY_PSH.dgn
Bridges

STATE OF NORTH CAROLINA
DIVISION OF HIGHWAYS

TRANSPORTATION MANAGEMENT PLAN

MACON COUNTY

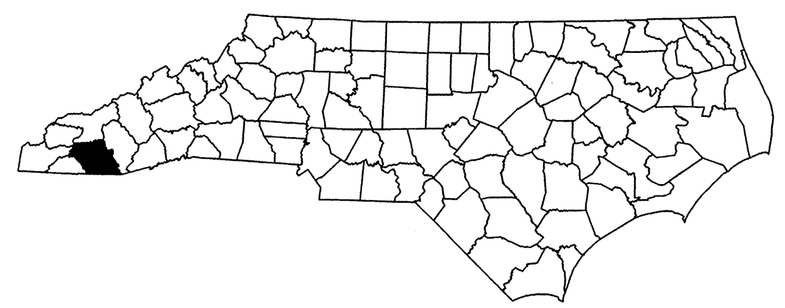

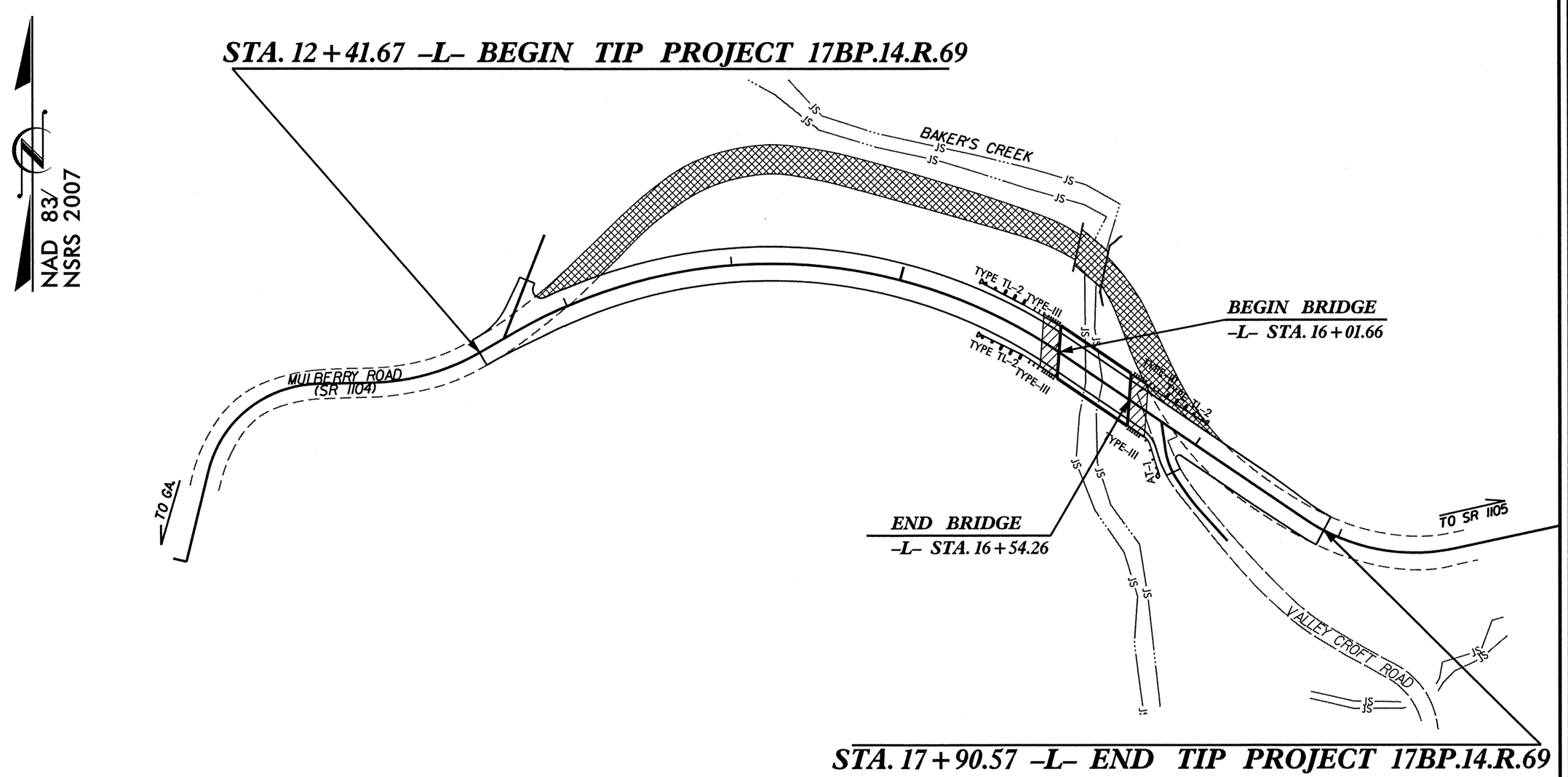

INDEX OF SHEETS

SHEET NO.	TITLE
TMP-1	TITLE SHEET, AND INDEX OF SHEETS
TMP-1A	LIST OF APPLICABLE ROADWAY STANDARD DRAWINGS, LEGEND, AND TEMPORARY PAVEMENT MARKING
TMP-1B	TRANSPORTATION OPERATIONS PLAN: (MANAGEMENT STRATEGIES, GENERAL NOTES AND LOCAL NOTES)
TMP-2	TEMPORARY TRAFFIC CONTROL PHASE I
TMP-3	TEMPORARY TRAFFIC CONTROL PHASE II
TMP-4	TEMPORARY TRAFFIC CONTROL PHASE III
PMP-1	PAVEMENT MARKING PLAN

SHEET NO.
TMP-1

17BP.14.R.69

TIP PROJECT:

WORK ZONE SAFETY & MOBILITY
"from the MOUNTAINS to the COAST"

N.C.D.O.T. WORK ZONE TRAFFIC CONTROL
1561 MAIL SERVICE CENTER (MSC) RALEIGH, NC 27699-1561
750 N. GREENFIELD PARKWAY, GARNER, NC 27529 (DELIVERY)
PHONE: (919) 773-2800 FAX: (919) 771-2745

J. S. BOURNE, P.E. — *STATE TRAFFIC MANAGEMENT ENGINEER*
JAMES VOSO, P.E. — *TRAFFIC CONTROL PROJECT ENGINEER*
JASON SNAPP, P.E. — *TRAFFIC CONTROL PROJECT DESIGN ENGINEER*
BRIAN ROSS — *TRAFFIC CONTROL DESIGN ENGINEER*

DIVISION OF HIGHWAYS * STATE OF NORTH CAROLINA * DEPARTMENT OF TRANSPORTATION * WORK ZONE TRAFFIC CONTROL

Mattern & Craig
CONSULTING ENGINEERS - SURVEYORS
12 BROAD STREET
ASHEVILLE, NORTH CAROLINA 28801
(828) 254-2201 - FAX (828) 254-4562

APPROVED: James Voso
DATE: 1/10/12

SEAL

NORTH CAROLINA PROFESSIONAL SEAL 022599 ENGINEER JAMES B. VOSO

10:52:51 AM
R:\3215\Bridgell5\Traffic\TrafficControl\Roadway\17BP14R69_TC_TSH.dgn
bgross

PROJ. REFERENCE NO.	SHEET NO.
17BP.14.R.69	TMP-1A

ROADWAY STANDARD DRAWINGS

THE FOLLOWING ROADWAY STANDARDS AS SHOWN IN "ROADWAY STANDARD DRAWINGS" - PROJECT SERVICES UNIT - N.C. DEPARTMENT OF TRANSPORTATION - RALEIGH, N.C., DATED JANAUARY 2012 ARE APPLICABLE TO THIS PROJECT AND BY REFERENCE HEREBY ARE CONSIDERED A PART OF THESE PLANS:

STD. NO.	TITLE
1101.01	WORK ZONE WARNING SIGNS
1101.02	TEMPORARY LANE CLOSURES
1101.11	TRAFFIC CONTROL DESIGN TABLES
1110.01	STATIONARY WORK ZONE SIGNS
1130.01	DRUMS
1135.01	CONES
1145.01	BARRICADES
1180.01	SKINNY - DRUM
1205.01	PAVEMENT MARKINGS - LINE TYPES AND OFFSETS
1205.02	PAVEMENT MARKINGS - TWO LANE AND MULTILANE ROADWAYS
1205.12	PAVEMENT MARKINGS - BRIDGES
1261.01	GUARDRAIL AND BARRIER DELINEATORS - INSTALLATION SPACING
1261.02	GUARDRAIL AND BARRIER DELINEATORS - TYPES AND MOUNTING
1262.01	GUARDRAIL END DELINEATION
1150.01	FLAGGING DEVICES

LEGEND

GENERAL

- DIRECTION OF TRAFFIC FLOW
- DIRECTION OF PEDESTRIAN TRAFFIC FLOW
- EXIST. PVMT.
- NORTH ARROW
- PROPOSED PVMT.
- WORK AREA
- REMOVAL
- USER DEFINED (IF NEEDED)
- USER DEFINED (IF NEEDED)

TRAFFIC CONTROL DEVICES

- BARRICADE (TYPE III)
- CONE
- DRUM — SKINNY DRUM — TUBULAR MARKER
- TEMPORARY CRASH CUSHION
- FLASHING ARROW BOARD
- FLAGGER
- LAW ENFORCEMENT
- TRUCK MOUNTED ATTENUATOR (TMA)
- CHANGEABLE MESSAGE SIGN

TEMPORARY SIGNING

- PORTABLE SIGN
- STATIONARY SIGN
- STATIONARY OR PORTABLE SIGN

SIGNALS

- EXISTING
- PROPOSED
- TEMPORARY

PAVEMENT MARKINGS

- EXISTING LINES
- TEMPORARY LINES

PAVEMENT MARKERS

- CRYSTAL/CRYSTAL
- CRYSTAL/RED
- YELLOW/YELLOW

PAVEMENT MARKING SYMBOLS

- PAVEMENT MARKING SYMBOLS

TEMPORARY PAVEMENT MARKING

SYMBOL	DESCRIPTION	PAY ITEM
PA	WHITE EDGELINE (1x)	PAINT (4")
P2	WHITE STOPBAR (1x)	PAINT (24")

Mattern & Craig
CONSULTING ENGINEERS - SURVEYORS
12 BROAD STREET
ASHEVILLE, NORTH CAROLINA 28801
(828) 254-2201 - FAX (828) 254-4562

APPROVED: DATE: 1/10/14

NORTH CAROLINA PROFESSIONAL SEAL 022599 ENGINEER JAMES B. VOSO

DIVISION OF HIGHWAYS · STATE OF NORTH CAROLINA · DEPARTMENT OF TRANSPORTATION · WORK ZONE TRAFFIC CONTROL

ROADWAY STANDARD DRAWINGS & LEGEND

10:54:37 AM
R:\3215\Bridgeil5\Traffic\TrafficControl\Roadway\17BP14R69_TC_TSH.dgn
bgrross

PROJ. REFERENCE NO.	SHEET NO.
17BP.14.R.69	TMP-1B

GENERAL NOTES / LOCAL NOTES

GENERAL NOTES

CHANGES MAY BE REQUIRED WHEN PHYSICAL DIMENSIONS IN THE DETAIL DRAWINGS, STANDARD DETAILS, AND ROADWAY DETAILS ARE NOT ATTAINABLE TO MEET FIELD CONDITIONS OR RESULT IN DUPLICATE OR UNDESIRED OVERLAPPING OF DEVICES, MODIFICATION MAY INCLUDE: MOVING, SUPPLEMENTING, COVERING, OR REMOVAL OF DEVICES AS DIRECTED BY THE ENGINEER

THE FOLLOWING GENERAL NOTES APPLY AT ALL TIMES FOR THE DURATION OF THE CONSTRUCTION PROJECT, EXCEPT WHEN OTHERWISE NOTED IN THE PLAN, OR DIRECTED BY THE ENGINEER.

TIME RESTRICTIONS

A. DO NOT CONDUCT ANY HAULING OPERATIONS AGAINST THE FLOW OF TRAFFIC OF AN OPEN TRAVELWAY UNLESS THE HAULING OPERATION IS PROTECTED BY BARRIER OR GUARDRAIL OR AS DIRECTED BY THE ENGINEER.

LANE AND SHOULDER CLOSURE REQUIREMENTS

B. REMOVE LANE CLOSURE DEVICES FROM THE LANE WHEN WORK IS NOT BEING PERFORMED BEHIND THE LANE CLOSURE OR WHEN A LANE CLOSURE IS NO LONGER NEEDED OR AS DIRECTED BY THE ENGINEER.

C. WHEN PERSONNEL AND/OR EQUIPMENT ARE WORKING ON THE SHOULDER ADJACENT TO AN UNDIVIDED FACILITY AND WITHIN 5 FT OF AN OPEN TRAVEL LANE, CLOSE THE NEAREST OPEN TRAVEL LANE USING ROADWAY STANDARD DRAWING NO. 1101.02 UNLESS THE WORK AREA IS PROTECTED BY BARRIER OR GUARDRAIL.

D. WHEN PERSONNEL AND/OR EQUIPMENT ARE WORKING WITHIN A LANE OF TRAVEL OF AN UNDIVIDED OR DIVIDED FACILITY, CLOSE THE LANE ACCORDING TO THE TRAFFIC CONTROL PLANS, ROADWAY STANDARD DRAWINGS, OR AS DIRECTED BY THE ENGINEER. CONDUCT THE WORK SO THAT ALL PERSONNEL AND/OR EQUIPMENT REMAIN WITHIN THE CLOSED TRAVEL LANE.

E. DO NOT WORK SIMULTANEOUSLY WITHIN 15 FT ON BOTH SIDES OF AN OPEN TRAVELWAY, RAMP, OR LOOP WITHIN THE SAME LOCATION UNLESS PROTECTED WITH GUARDRAIL OR BARRIER.

PAVEMENT EDGE DROP OFF REQUIREMENTS

F. BACKFILL AT A 6:1 SLOPE UP TO THE EDGE AND ELEVATION OF EXISTING PAVEMENT IN AREAS ADJACENT TO AN OPENED TRAVEL LANE THAT HAS AN EDGE OF PAVEMENT DROP-OFF AS FOLLOWS:

BACKFILL DROP-OFFS THAT EXCEED 2 INCHES ON ROADWAYS WITH POSTED SPEED LIMITS OF 45 MPH OR GREATER.

BACKFILL DROP-OFFS THAT EXCEED 3 INCHES ON ROADWAYS WITH POSTED SPEED LIMITS LESS THAN 45 MPH.

BACKFILL WITH SUITABLE COMPACTED MATERIAL, AS APPROVED BY THE ENGINEER, AT NO EXPENSE TO THE DEPARTMENT.

G. DO NOT EXCEED A DIFFERENCE OF 2 INCHES IN ELEVATION BETWEEN OPEN LANES OF TRAFFIC FOR NOMINAL LIFTS OF 1.5 INCHES. INSTALL ADVANCE WARNING "UNEVEN LANES" SIGNS (W8-11) 500 FT IN ADVANCE AND A MINIMUM OF EVERY HALF MILE THROUGHOUT THE UNEVEN AREA.

TRAFFIC PATTERN ALTERATIONS

H. NOTIFY THE ENGINEER TWENTY ONE (21) CALENDAR DAYS PRIOR TO ANY TRAFFIC PATTERN ALTERATION.

SIGNING

I. INSTALL ADVANCE WORK ZONE WARNING SIGNS WHEN WORK IS WITHIN 40 FT FROM THE EDGE OF TRAVEL LANE AND NO MORE THAN THREE (3) DAYS PRIOR TO THE BEGINNING OF CONSTRUCTION.

J. CONTRACTOR TO COVER OR REMOVE ALL SIGNS AND DEVICES REQUIRED TO CLOSE THE ROAD WHEN ROAD CLOSURE IS NOT IN OPERATION.

K. ENSURE ALL NECESSARY SIGNING IS IN PLACE PRIOR TO ALTERING ANY TRAFFIC PATTERN.

TRAFFIC CONTROL DEVICES

L. WHEN LANE CLOSURES ARE NOT IN EFFECT SPACE CHANNELIZING DEVICES IN WORK AREAS NO GREATER IN FEET THAN TWICE THE POSTED SPEED LIMIT (MPH) EXCEPT 10 FT ON-CENTER IN RADII, AND 3 FT OFF THE EDGE OF AN OPEN TRAVELWAY. REFER TO STANDARD SPECIFICATIONS FOR ROADS AND STRUCTURES SECTIONS 1130 (DRUMS), 1135 (CONES) AND 1180 (SKINNY DRUMS) FOR ADDITIONAL REQUIREMENTS.

M. PLACE TYPE III BARRICADES, WITH "ROAD CLOSED" SIGN R11-2 ATTACHED, OF SUFFICIENT LENGTH TO CLOSE ENTIRE ROADWAY.

PAVEMENT MARKINGS AND MARKERS

N. INSTALL TEMPORARY PAVEMENT MARKINGS AND TEMPORARY PAVEMENT MARKERS ON INTERIM LAYERS OF PAVEMENT AS FOLLOWS:

ROAD NAME	MARKING	MARKER
SR 1104 MULBERRY RD.	PAINT	NONE

O. PLACE ONE APPLICATION OF PAINT FOR TEMPORARY TRAFFIC PATTERNS. PLACE A SECOND APPLICATION OF PAINT SIX (6) MONTHS AFTER THE INITIAL APPLICATION AND EVERY SIX MONTHS AS DIRECTED BY THE ENGINEER.

P. TIE PROPOSED PAVEMENT MARKING LINES TO EXISTING PAVEMENT MARKING LINES.

Q. REMOVE/REPLACE ANY CONFLICTING/DAMAGED PAVEMENT MARKINGS AND MARKERS BY THE END OF EACH DAY'S OPERATION.

MISCELLANEOUS

R. IN THE EVENT A TIE-IN CANNOT BE MADE IN ONE DAY'S TIME, BRING THE TIE-IN AREA TO AN APPROPRIATE ROADWAY ELEVATION AS DETERMINED BY THE ENGINEER. PLACE BLACK ON ORANGE "LOOSE GRAVEL" SIGNS (W8-7) AND BLACK ON ORANGE "PAVEMENT ENDS" SIGNS (W8-3) 500 FT AND 500 FT RESPECTIVELY IN ADVANCE OF THE UNEVEN AREAS. USE DRUMS TO DELINEATE THE EDGE OF ROADWAY ALONG UNPAVED AREAS.

LOCAL NOTES

1. CONTRACTOR TO MAINTAIN DRIVEWAY ACCESS AT ALL TIMES

Mattern & Craig
CONSULTING ENGINEERS - SURVEYORS
12 BROAD STREET
ASHEVILLE, NORTH CAROLINA 28801
(828) 254-2201 - FAX (828) 254-4562

APPROVED: _____ DATE: 1/10/14

NORTH CAROLINA PROFESSIONAL SEAL 022599 ENGINEER JAMES B. VOSO

DIVISION OF HIGHWAYS
STATE OF NORTH CAROLINA
DEPARTMENT OF TRANSPORTATION
WORK ZONE TRAFFIC CONTROL

TRANSPORTATION OPERATIONS PLAN

10:55:09 AM
R:\3215\Bridgell5\Traffic\TrafficControl\Roadway\17BP14R69_TC_TSH.dgn
bgross

PROJ. REFERENCE NO.	SHEET NO.
17BP.14.R.69	TMP-2

PHASE I OVERVIEW

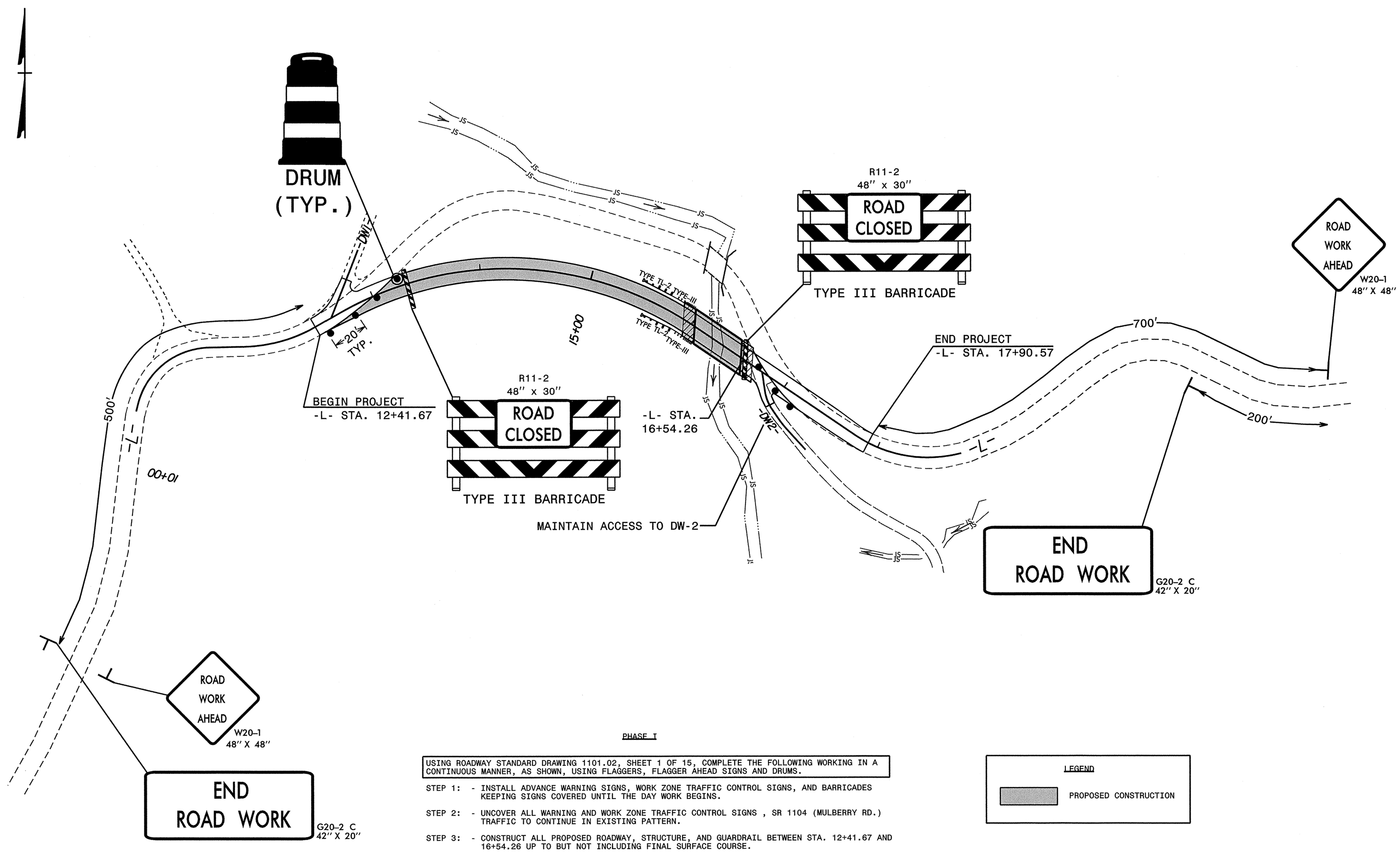

PHASE I

USING ROADWAY STANDARD DRAWING 1101.02, SHEET 1 OF 15, COMPLETE THE FOLLOWING WORKING IN A CONTINUOUS MANNER, AS SHOWN, USING FLAGGERS, FLAGGER AHEAD SIGNS AND DRUMS.

STEP 1: - INSTALL ADVANCE WARNING SIGNS, WORK ZONE TRAFFIC CONTROL SIGNS, AND BARRICADES KEEPING SIGNS COVERED UNTIL THE DAY WORK BEGINS.

STEP 2: - UNCOVER ALL WARNING AND WORK ZONE TRAFFIC CONTROL SIGNS , SR 1104 (MULBERRY RD.) TRAFFIC TO CONTINUE IN EXISTING PATTERN.

STEP 3: - CONSTRUCT ALL PROPOSED ROADWAY, STRUCTURE, AND GUARDRAIL BETWEEN STA. 12+41.67 AND 16+54.26 UP TO BUT NOT INCLUDING FINAL SURFACE COURSE.

LEGEND

PROPOSED CONSTRUCTION

APPROVED: DATE: 11/10/14

NORTH CAROLINA PROFESSIONAL SEAL 022599 ENGINEER JAMES B. VOSO

DIVISION OF HIGHWAYS STATE OF NORTH CAROLINA DEPARTMENT OF TRANSPORTATION WORK ZONE TRAFFIC CONTROL

Mattern & Craig
CONSULTING ENGINEERS - SURVEYORS
12 BROAD STREET
ASHEVILLE, NORTH CAROLINA 28801
(828) 254-2201 - FAX (828) 254-4562

TRANSPORTATION MANAGEMENT PLAN PHASE I

10:57:20 AM
R:\3215\Bridgell5\Traffic\TrafficControl\Roadway\17BP14R69_TC_TMP2.dgn
bgross

PROJ. REFERENCE NO.	SHEET NO.
17BP.14.R.69	TMP-3

PHASE II OVERVIEW

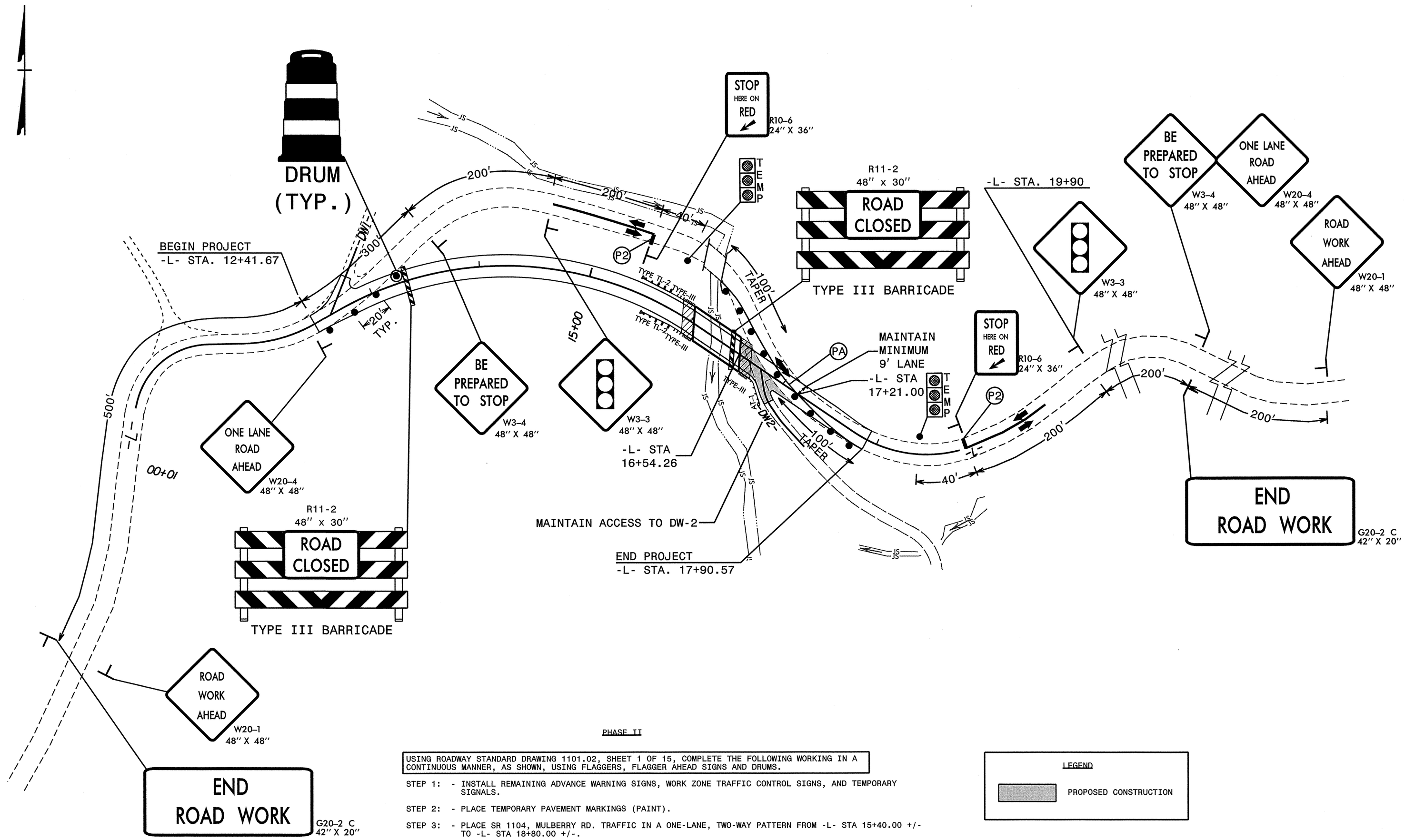

PHASE II

USING ROADWAY STANDARD DRAWING 1101.02, SHEET 1 OF 15, COMPLETE THE FOLLOWING WORKING IN A CONTINUOUS MANNER, AS SHOWN, USING FLAGGERS, FLAGGER AHEAD SIGNS AND DRUMS.

STEP 1: - INSTALL REMAINING ADVANCE WARNING SIGNS, WORK ZONE TRAFFIC CONTROL SIGNS, AND TEMPORARY SIGNALS.

STEP 2: - PLACE TEMPORARY PAVEMENT MARKINGS (PAINT).

STEP 3: - PLACE SR 1104, MULBERRY RD. TRAFFIC IN A ONE-LANE, TWO-WAY PATTERN FROM -L- STA 15+40.00 +/- TO -L- STA 18+80.00 +/-.

STEP 4: - CONSTRUCT PROPOSED STRUCTURE, APPROACH SLAB, ROADWAY, AND GUARDRAIL (EXCLUDING GUARDRAIL IN NORTHEAST QUADRANT OF BRIDGE) UP TO BUT NOT INCLUDING THE FINAL SURFACE COURSE FROM -L- STA 16+54.26 TO -L- STA 17+21.00 +/-.

LEGEND

PROPOSED CONSTRUCTION

APPROVED: James B. Voso DATE: 1/8/14

NORTH CAROLINA PROFESSIONAL SEAL 022599 ENGINEER JAMES B. VOSO

DIVISION OF HIGHWAYS STATE OF NORTH CAROLINA DEPARTMENT OF TRANSPORTATION WORK ZONE TRAFFIC CONTROL

TRANSPORTATION MANAGEMENT PLAN PHASE II

Mattern & Craig
CONSULTING ENGINEERS - SURVEYORS
12 BROAD STREET
ASHEVILLE, NORTH CAROLINA 28801
(828) 254-2201 - FAX (828) 254-4562

2:11:17 PM
R:\3215\Bridgell5\Traffic\TrafficControl\Roadway\17BP14R69_TC_TMP3.dgn
bgross

PROJ. REFERENCE NO.	SHEET NO.
17BP.14.R.69	TMP-4

PHASE III OVERVIEW

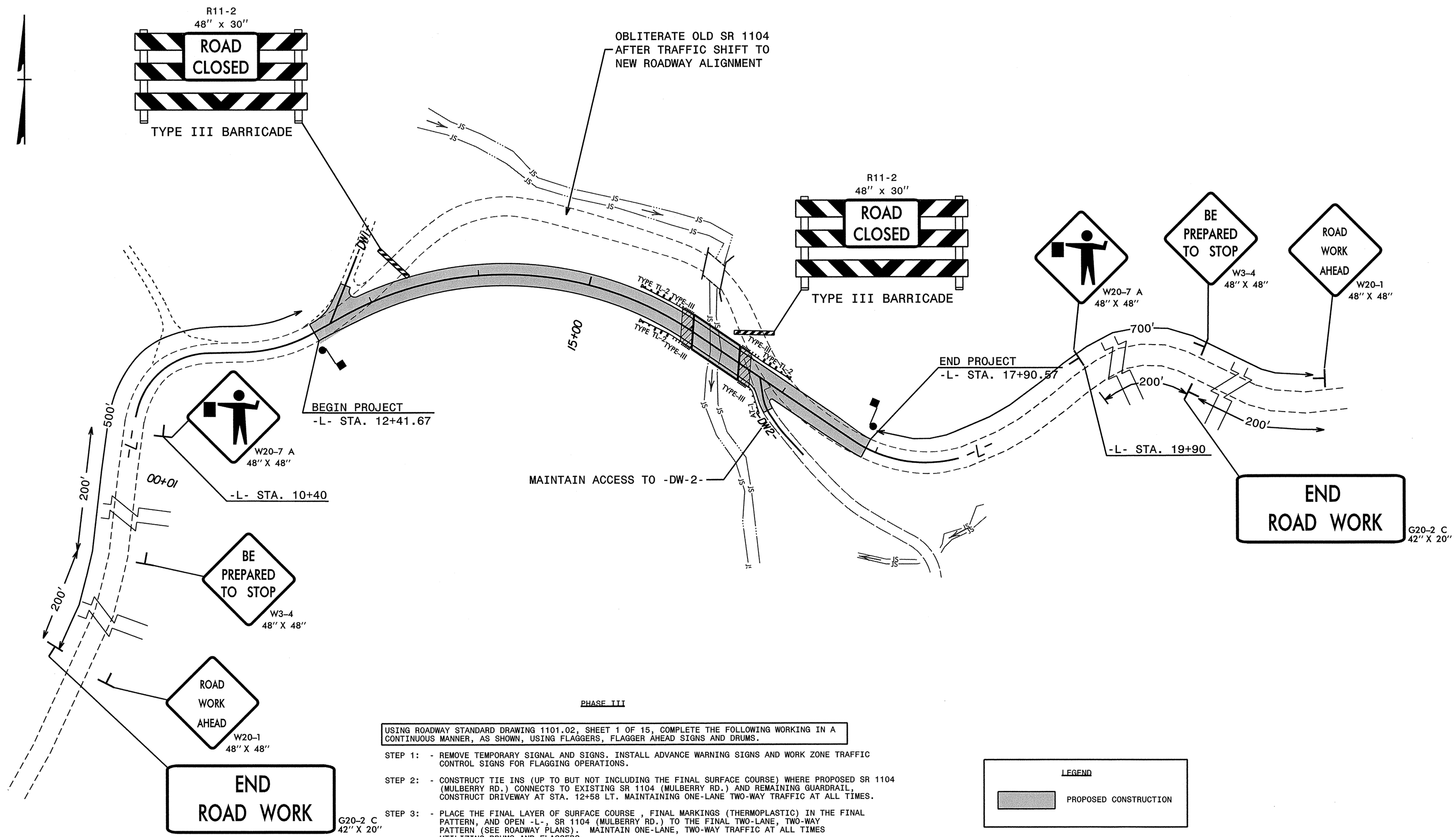

PHASE III

USING ROADWAY STANDARD DRAWING 1101.02, SHEET 1 OF 15, COMPLETE THE FOLLOWING WORKING IN A CONTINUOUS MANNER, AS SHOWN, USING FLAGGERS, FLAGGER AHEAD SIGNS AND DRUMS.

STEP 1: - REMOVE TEMPORARY SIGNAL AND SIGNS. INSTALL ADVANCE WARNING SIGNS AND WORK ZONE TRAFFIC CONTROL SIGNS FOR FLAGGING OPERATIONS.

STEP 2: - CONSTRUCT TIE INS (UP TO BUT NOT INCLUDING THE FINAL SURFACE COURSE) WHERE PROPOSED SR 1104 (MULBERRY RD.) CONNECTS TO EXISTING SR 1104 (MULBERRY RD.) AND REMAINING GUARDRAIL, CONSTRUCT DRIVEWAY AT STA. 12+58 LT. MAINTAINING ONE-LANE TWO-WAY TRAFFIC AT ALL TIMES.

STEP 3: - PLACE THE FINAL LAYER OF SURFACE COURSE , FINAL MARKINGS (THERMOPLASTIC) IN THE FINAL PATTERN, AND OPEN -L-, SR 1104 (MULBERRY RD.) TO THE FINAL TWO-LANE, TWO-WAY PATTERN (SEE ROADWAY PLANS). MAINTAIN ONE-LANE, TWO-WAY TRAFFIC AT ALL TIMES UTILIZING DRUMS AND FLAGGERS.

STEP 4: - OBLITERATE REMAINING OLD SR 1104 (MULBERRY RD.) PAVEMENT AND RETURN GROUND TO NATURAL CONDITIONS.

STEP 5: - REMOVE ALL TRAFFIC CONTROL DEVICES.

LEGEND

PROPOSED CONSTRUCTION

NOTE: FOR THE DURATION OF PHASE III CONSTRUCTION, TWO-WAY, TWO-LANE TRAFFIC MUST BE RESTORED AT THE END OF EACH WORK DAY.

APPROVED: James Vosso DATE: 1/10/14

NORTH CAROLINA PROFESSIONAL SEAL 022599 ENGINEER JAMES B. VOSSO

DIVISION OF HIGHWAYS STATE OF NORTH CAROLINA DEPARTMENT OF TRANSPORTATION WORK ZONE TRAFFIC CONTROL

Mattern & Craig
CONSULTING ENGINEERS - SURVEYORS
12 BROAD STREET
ASHEVILLE, NORTH CAROLINA 28801
(828) 254-2201 - FAX (828) 254-4562

TRANSPORTATION MANAGEMENT PLAN PHASE III

11:00:41 AM
R:\3215\Bridgeli5\Traffic\TrafficControl\Roadway\17BP14R69_TC_TMP4.dgn
bgross

PROJ. REFERENCE NO.	SHEET NO.
17BP.14.R.69	PMP-1

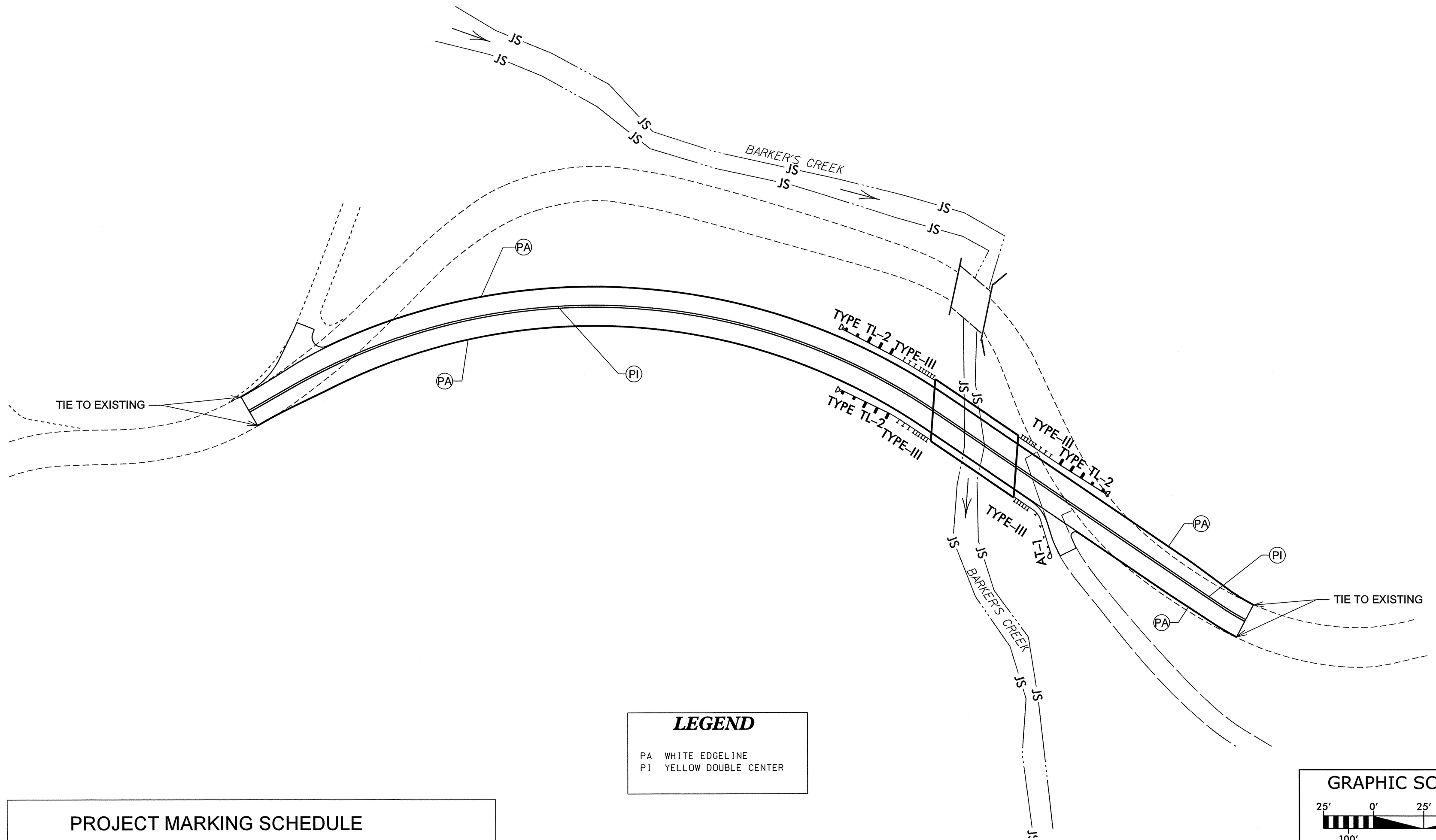

LEGEND

PA WHITE EDGELINE
PI YELLOW DOUBLE CENTER

PROJECT MARKING SCHEDULE
BRIDGE 115

SYMBOL	DESCRIPTION	PAY ITEM	PAY ITEM QUANTITY
TI	YELLOW DOUBLE CENTER	PAINT (4", DOUBLE COAT)	2,240 LF
TA	WHITE EDGELINE	PAINT (4", DOUBLE COAT)	2,240 LF

GRAPHIC SCALE
25' 0' 25' 50'
100'
PLANS

APPROVED: DATE: 1/10/14

NORTH CAROLINA PROFESSIONAL SEAL 022599 ENGINEER JAMES B. VOSO

DIVISION OF HIGHWAYS STATE OF NORTH CAROLINA DEPARTMENT OF TRANSPORTATION WORK ZONE TRAFFIC CONTROL

PAVEMENT MARKING PLAN

Mattern & Craig
SINCE 1978
CONSULTING ENGINEERS - SURVEYORS
12 BROAD STREET
ASHEVILLE, NORTH CAROLINA 28801
(828) 254-2201 - FAX (828) 254-4562

11:01:54 AM
R:\3215\Bridgeli5\Traffic\TrafficControl\Roadway\17BP14R69_TC_PMPI.dgn
Dgr:oss

PROJECT NO: 17BP.14.R.69

STATE	STATE PROJECT REFERENCE NO.	SHEET NO.	TOTAL SHEETS
N.C.	17BP.14.R.69	EC-1	

STATE PROJ. NO.	F.A. PROJ. NO.	DESCRIPTION

STATE OF NORTH CAROLINA
DIVISION OF HIGHWAYS

PLAN FOR PROPOSED
HIGHWAY EROSION CONTROL

MACON COUNTY

LOCATION: BRIDGE 115 OVER BAKER'S CREEK
ON SR 1104 (MULBERRY ROAD)
TYPE OF WORK: GRADING, DRAINAGE, PAVING, & STRUCTURE

NAD 83/
NSRS 2007

STA. 12+41.67 –L– BEGIN TIP PROJECT 17BP.14.R.69

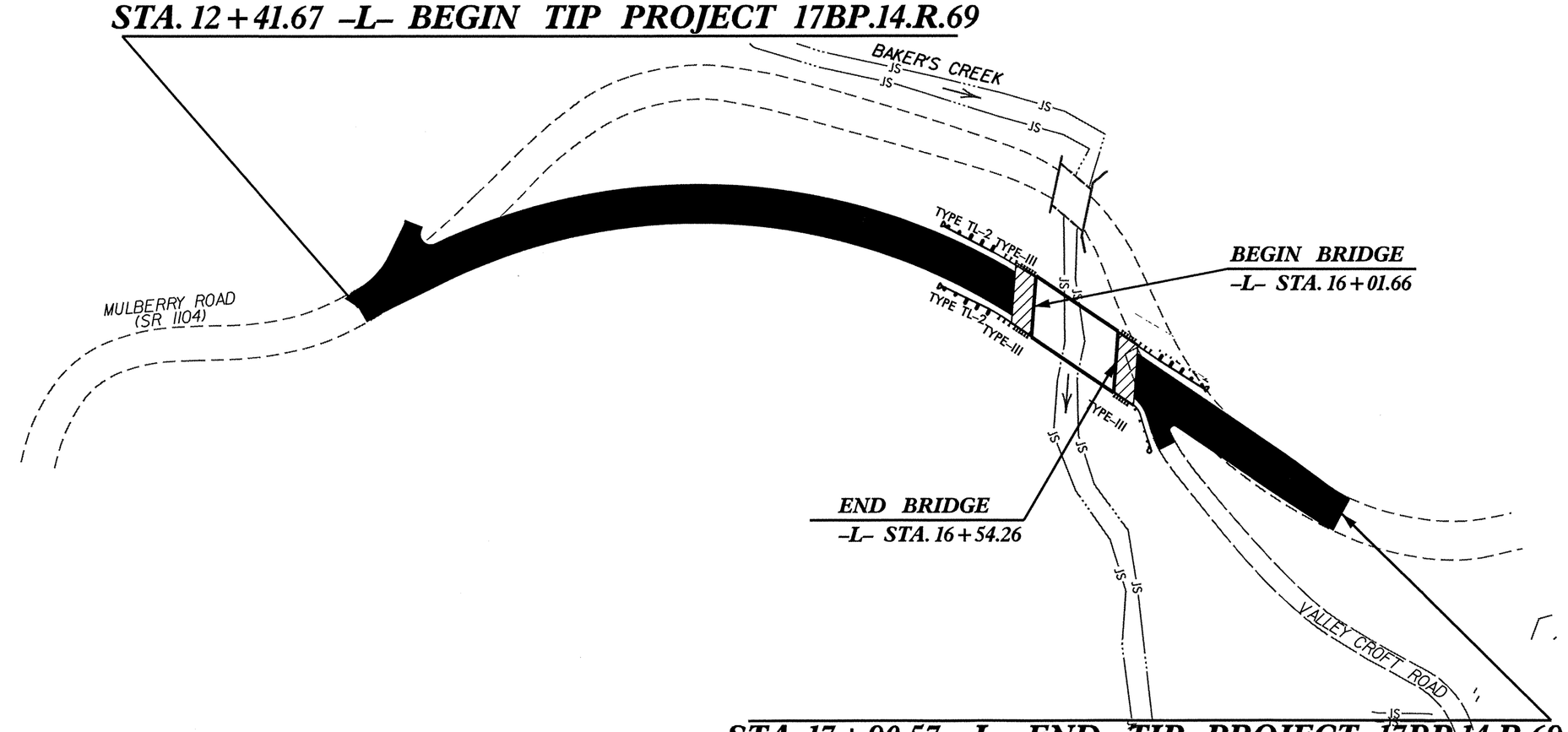

STA. 17+90.57 –L– END TIP PROJECT 17BP.14.R.69

DANA BOLDEN
LEVEL IIIA NAME

3171
LEVEL IIIA CERTIFICATION NO.

CLEARING ON THIS PROJECT SHALL BE PERFORMED TO THE LIMITS ESTABLISHED BY METHOD II

EROSION AND SEDIMENT CONTROL MEASURES

Std. #	Description	Symbol
1630.03	Temporary Silt Ditch	TSD
1630.05	Temporary Diversion	TD
1605.01	Temporary Silt Fence	
1606.01	Special Sediment Control Fence	
1622.01	Temporary Berms and Slope Drains	
1630.02	Silt Basin Type B	
1633.01	Temporary Rock Silt Check Type-A	
	Temporary Rock Silt Check Type-A with Matting and Polyacrylamide (PAM)	
1633.02	Temporary Rock Silt Check Type-B	
	Wattle / Coir Fiber Wattle	EW CFW
	Wattle / Coir Fiber Wattle with Polyacrylamide (PAM)	
1634.01	Temporary Rock Sediment Dam Type-A	
1634.02	Temporary Rock Sediment Dam Type-B	
1635.01	Rock Pipe Inlet Sediment Trap Type-A	
1635.02	Rock Pipe Inlet Sediment Trap Type-B	
1630.04	Stilling Basin	
1630.06	Special Stilling Basin	
	Rock Inlet Sediment Trap:	
1632.01	Type A	A
1632.02	Type B	B
1632.03	Type C	C
	Skimmer Basin	
	Tiered Skimmer Basin	
	Infiltration Basin	

THIS PROJECT CONTAINS EROSION CONTROL PLANS FOR CLEARING AND GRUBBING PHASE OF CONSTRUCTION.

ENVIRONMENTALLY SENSITIVE AREA(S) EXIST ON THIS PROJECT

Refer To E. C. Special Provisions for Special Considerations.

THIS PROJECT HAS BEEN DESIGNED TO SENSITIVE WATERSHED STANDARDS.

GRAPHIC SCALE

0 50
PLANS

0 50
PROFILE (HORIZONTAL)

0 10
PROFILE (VERTICAL)

ROADSIDE ENVIRONMENTAL UNIT
DIVISION OF HIGHWAYS
STATE OF NORTH CAROLINA

THESE EROSION AND SEDIMENT CONTROL PLANS COMPLY WITH THE REGULATIONS SET FORTH BY THE NCG-010000 GENERAL CONSTRUCTION PERMIT EFFECTIVE AUGUST 3, 2011 ISSUED BY THE NORTH CAROLINA DEPARTMENT OF ENVIRONMENT AND NATURAL RESOURCES DIVISION OF WATER QUALITY.

Prepared In the Office of:

Mattern & Craig
CONSULTING ENGINEERS - SURVEYORS
12 BROAD STREET
ASHEVILLE, NORTH CAROLINA 28801
(828) 254-2201 - FAX (828) 254-4562

Reviewed In the Office of:

ROADSIDE ENVIRONMENTAL UNIT
1 South Wilmington St.
Raleigh, NC 27611

2012 STANDARD SPECIFICATIONS

Roadway Standard Drawings

The following roadway english standards as appear in "Roadway Standard Drawings"– Roadway Design Unit – N. C. Department of Transportation – Raleigh, N. C., dated January 2012 and the latest revison thereto are applicable to this project and by reference hereby are considered a part of these plans.

1604.01	Railroad Erosion Control Detail	1632.01	Rock Inlet Sediment Trap Type A
1605.01	Temporary Silt Fence	1632.02	Rock Inlet Sediment Trap Type B
1606.01	Special Sediment Control Fence	1632.03	Rock Inlet Sediment Trap Type C
1607.01	Gravel Construction Entrance	1633.01	Temporary Rock Silt Check Type A
1622.01	Temporary Berms and Slope Drains	1633.02	Temporary Rock Silt Check Type B
1630.01	Riser Basin	1634.01	Temporary Rock Sediment Dam Type A
1630.02	Silt Basin Type B	1634.02	Temporary Rock Sediment Dam Type B
1630.03	Temporary Silt Ditch	1635.01	Rock Pipe Inlet Sediment Trap Type A
1630.04	Stilling Basin	1635.02	Rock Pipe Inlet Sediment Trap Type B
1630.05	Temporary Diversion	1640.01	Coir Fiber Baffle
1630.06	Special Stilling Basin	1645.01	Temporary Stream Crossing
1631.01	Matting Installation		

12:22:02 PM
15\8-rdgeil15\Environmental\Design\17BP14R69_EC_TSH.dgn
Sgross

PROJECT REFERENCE NO.	SHEET NO.
17BP.J4.R.69	EC-2
R/W SHEET NO.	
ROADWAY DESIGN ENGINEER	HYDRAULICS ENGINEER

TEMPORARY ROCK SILT CHECK TYPE 'A' WITH EXCELSIOR MATTING AND POLYACRYLAMIDE (PAM)

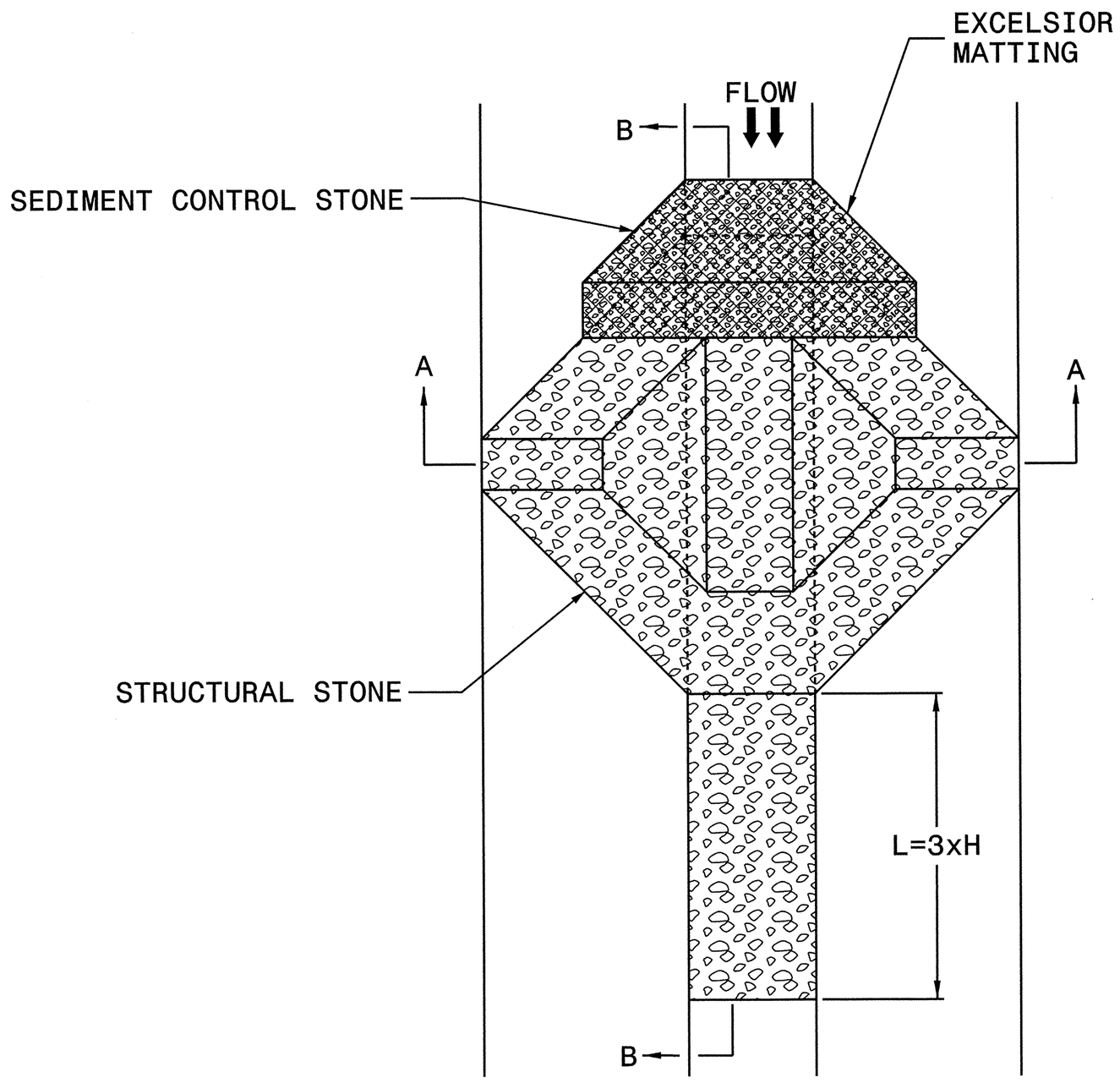

PLAN

NOTES

USE EXCELSIOR FOR MATTING MATERIAL AND ANCHOR MATTING SECTION AT TOP AND BOTTOM WITH CLASS B STONE.

PRIOR TO POLYACRYLAMIDE (PAM) APPLICATION, OBTAIN A SOIL SAMPLE FROM PROJECT LOCATION, AND FROM OFFSITE MATERIAL, AND ANALYZE FOR APPROPRIATE PAM FLOCCULANT TO BE APPLIED TO EACH ROCK SILT CHECK.

INITIALLY APPLY 3.5 OUNCES OF POLYACRYLAMIDE (PAM) TO TOP OF MATTING SECTION AND AFTER EVERY RAINFALL EVENT THAT EQUALS OR EXCEEDS 0.50 INCHES.

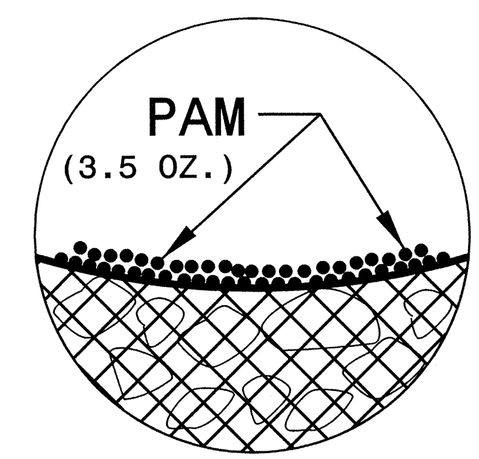

INSET A

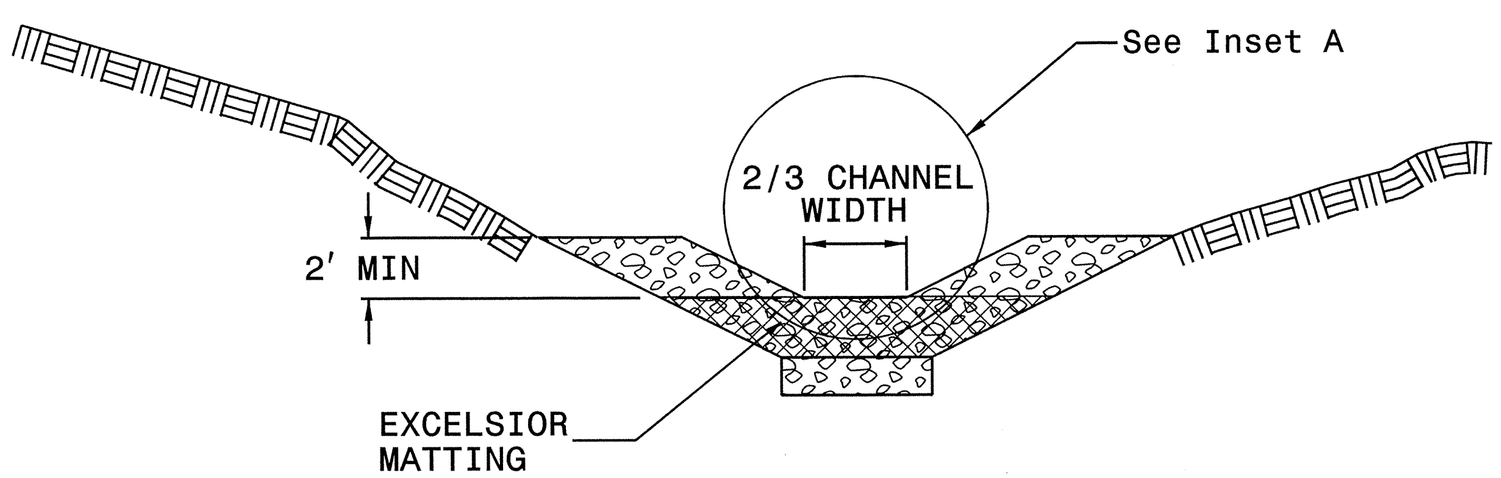

SECTION A-A

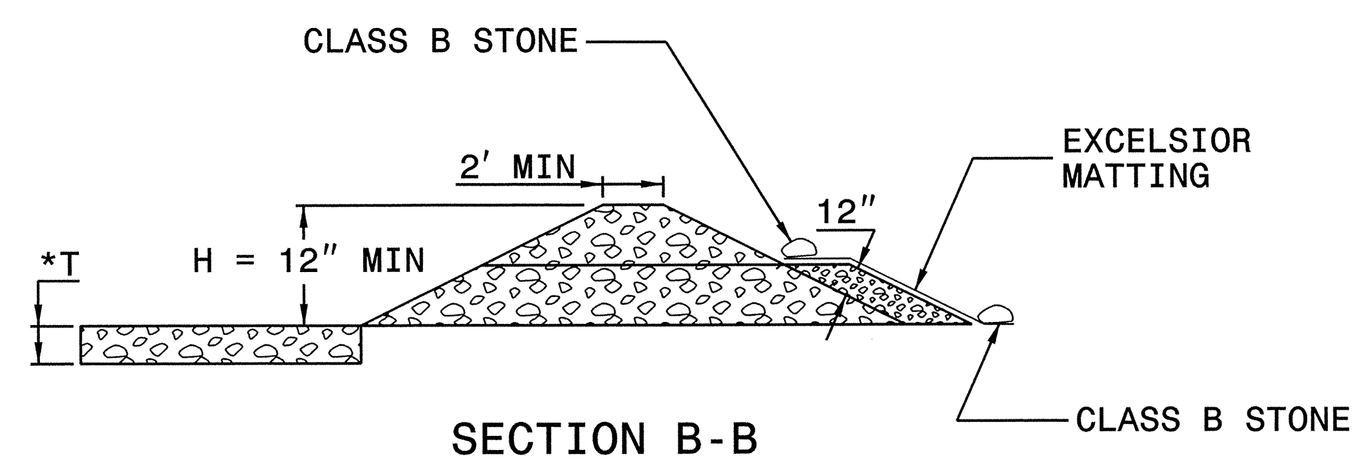

SECTION B-B

*T = 12" MIN., 18" MAX.

NOT TO SCALE

PROJECT REFERENCE NO.	SHEET NO.
17BP.14.R.69	EC-3

ROADWAY DESIGN ENGINEER

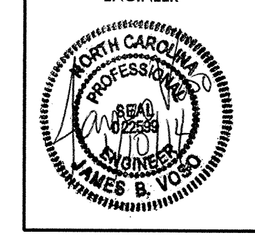

HYDRAULICS ENGINEER

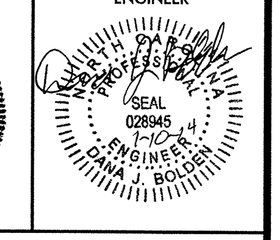

DIVISION OF HIGHWAYS
STATE OF NORTH CAROLINA

SOIL STABILIZATION SUMMARY SHEET

PERMANENT SOIL REINFORCEMNT MAT

CONST SHEET NO.	LINE	FROM STATION	TO STATION	SIDE	ESTIMATE (SY)
4	-L-	16+35	17+90	LT	120
			SUBTOTAL		120
	ADDITIONAL PSRM TO BE INSTALLED				0
				TOTAL	120
				SAY	120

MATTING FOR EROSION CONTROL

CONST SHEET NO.	LINE	FROM STATION	TO STATION	SIDE	ESTIMATE (SY)
4	-L-	15+10	15+90	LT	75
4	-L-	12+50	16+20	RT	330
			SUBTOTAL		405
MISCELLANEOUS MATTING TO BE INSTALLED AS DIRECTED BY THE ENGINEER					3000
				TOTAL	3405
				SAY	3500

PROJECT REFERENCE NO.	SHEET NO.
17BP.14.R.69	EC-3A

ROADWAY DESIGN ENGINEER

HYDRAULICS ENGINEER

DIVISION OF HIGHWAYS
STATE OF NORTH CAROLINA

SOIL STABILIZATION TIMEFRAMES

SITE DESCRIPTION	STABILIZATION TIME	TIMEFRAME EXCEPTIONS
PERIMETER DIKES, SWALES, DITCHES AND SLOPES	7 DAYS	NONE
HIGH QUALITY WATER (HQW) ZONES	7 DAYS	NONE
SLOPES STEEPER THAN 3:1	7 DAYS	IF SLOPES ARE 10' OR LESS IN LENGTH AND ARE NOT STEEPER THAN 2:1, 14 DAYS ARE ALLOWED.
SLOPES 3:1 OR FLATTER	14 DAYS	7 DAYS FOR SLOPES GREATER THAN 50' IN LENGTH.
ALL OTHER AREAS WITH SLOPES FLATTER THAN 4:1	14 DAYS	NONE, EXCEPT FOR PERIMETERS AND HQW ZONES.

PROJECT REFERENCE NO.	SHEET NO.
17BP.14.R.69	EC-4
R/W SHEET NO.	
ROADWAY DESIGN ENGINEER	HYDRAULICS ENGINEER

NORTH CAROLINA PROFESSIONAL SEAL 032889 ENGINEER JAMES B. VOSO

N. CAROLINA PROFESSIONAL SEAL 028945 ENGINEER JANA J. BOLDEN

CLEARING AND GRUBBING
EROSION CONTROL FOR
CONSTRUCTION SHEET 4

NOTES: ANY DEVIATION FROM OPTIONS GIVEN WILL REQUIRE PRIOR APPROVAL BY ENGINEER.

ADDITIONAL EROSION CONTROL DEVICES MAY NEED TO BE INSTALLED AS DIRECTED BY THE ENGINEER.

IF ANY PUMPED DEWATERING IS REQUIRED, A SPECIAL STILLING BASIN SHALL BE PROVIDED AS NEEDED

NOTE:
PLACE TEMPORARY ROCK SEDIMENT DAMS TYPE – B AND TEMPORARY ROCK SILT CHECKS TYPE – A AT DRAINAGE OUTLETS.

NOTE:
UTILIZE TEMPORARY SILT CHECK TYPE – A AS STILLING BASIN WHERE APPLICABLE.

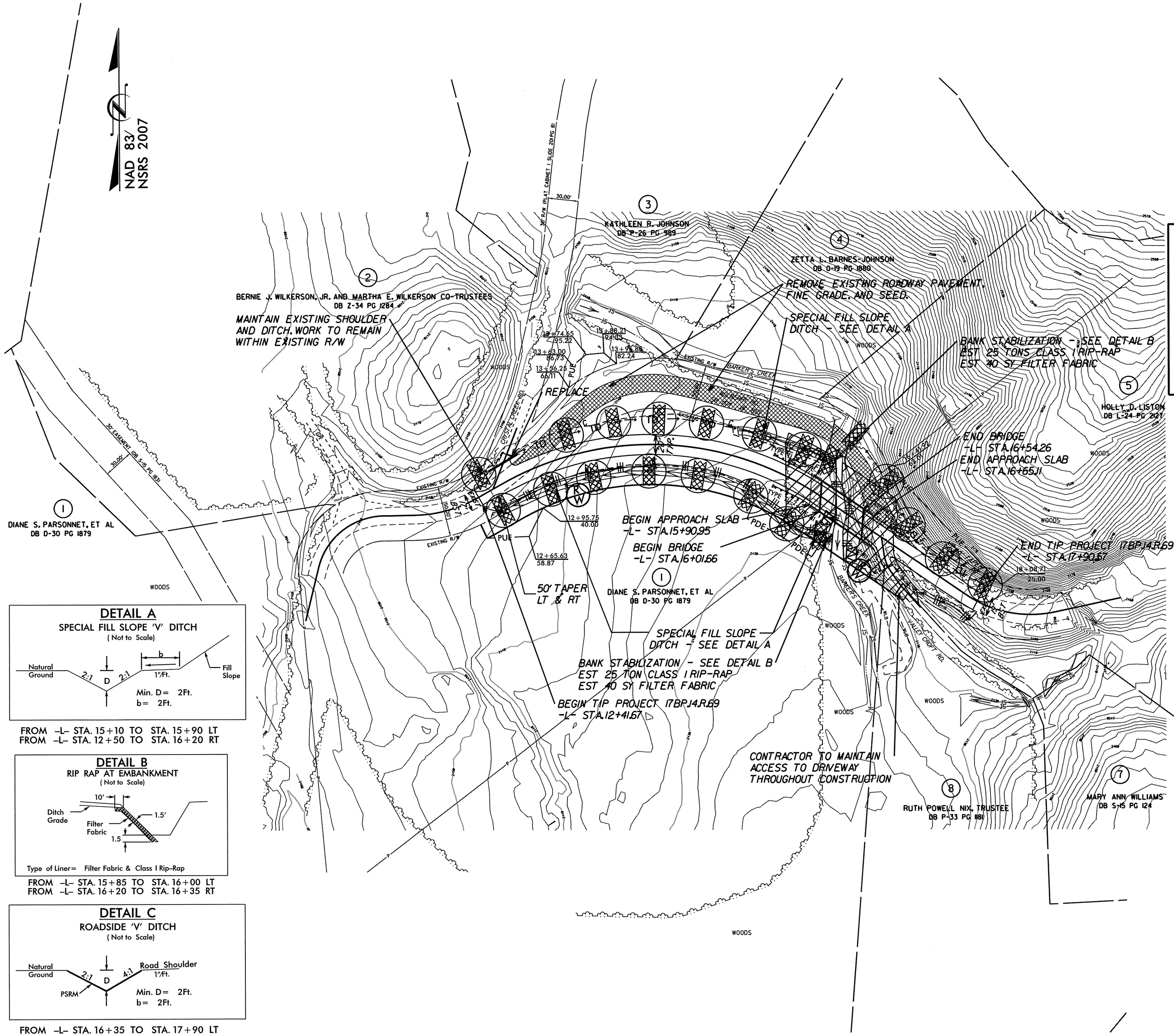

DETAIL A
SPECIAL FILL SLOPE 'V' DITCH
(Not to Scale)

FROM -L- STA. 15+10 TO STA. 15+90 LT
FROM -L- STA. 12+50 TO STA. 16+20 RT

DETAIL B
RIP RAP AT EMBANKMENT
(Not to Scale)

Type of Liner= Filter Fabric & Class I Rip-Rap

FROM -L- STA. 15+85 TO STA. 16+00 LT
FROM -L- STA. 16+20 TO STA. 16+35 RT

DETAIL C
ROADSIDE 'V' DITCH
(Not to Scale)

FROM -L- STA. 16+35 TO STA. 17+90 LT

ENVIRONMENTALLY SENSITIVE AREA

PROJECT REFERENCE NO.	SHEET NO.
17BP.14.R.69	EC-5
R/W SHEET NO.	
ROADWAY DESIGN ENGINEER	HYDRAULICS ENGINEER

NORTH CAROLINA PROFESSIONAL SEAL 022259 ENGINEER JAMES B. VOSS

NORTH CAROLINA PROFESSIONAL SEAL 028945 ENGINEER DANA J. BOLDEN

Place Matting for Erosion Control on Slope as Work Allows.

NOTES: ANY DEVIATION FROM OPTIONS GIVEN WILL REQUIRE PRIOR APPROVAL BY ENGINEER.

ADDITIONAL EROSION CONTROL DEVICES MAY NEED TO BE INSTALLED AS DIRECTED BY THE ENGINEER.

IF ANY PUMPED DEWATERING IS REQUIRED, A SPECIAL STILLING BASIN SHALL BE PROVIDED AS NEEDED

NOTE: PLACE TEMPORARY ROCK SEDIMENT DAMS TYPE – B AND TEMPORARY ROCK SILT CHECKS TYPE – A AT DRAINAGE OUTLETS.

NOTE: UTILIZE TEMPORARY SILT CHECK TYPE – A AS STILLING BASIN WHERE APPLICABLE.

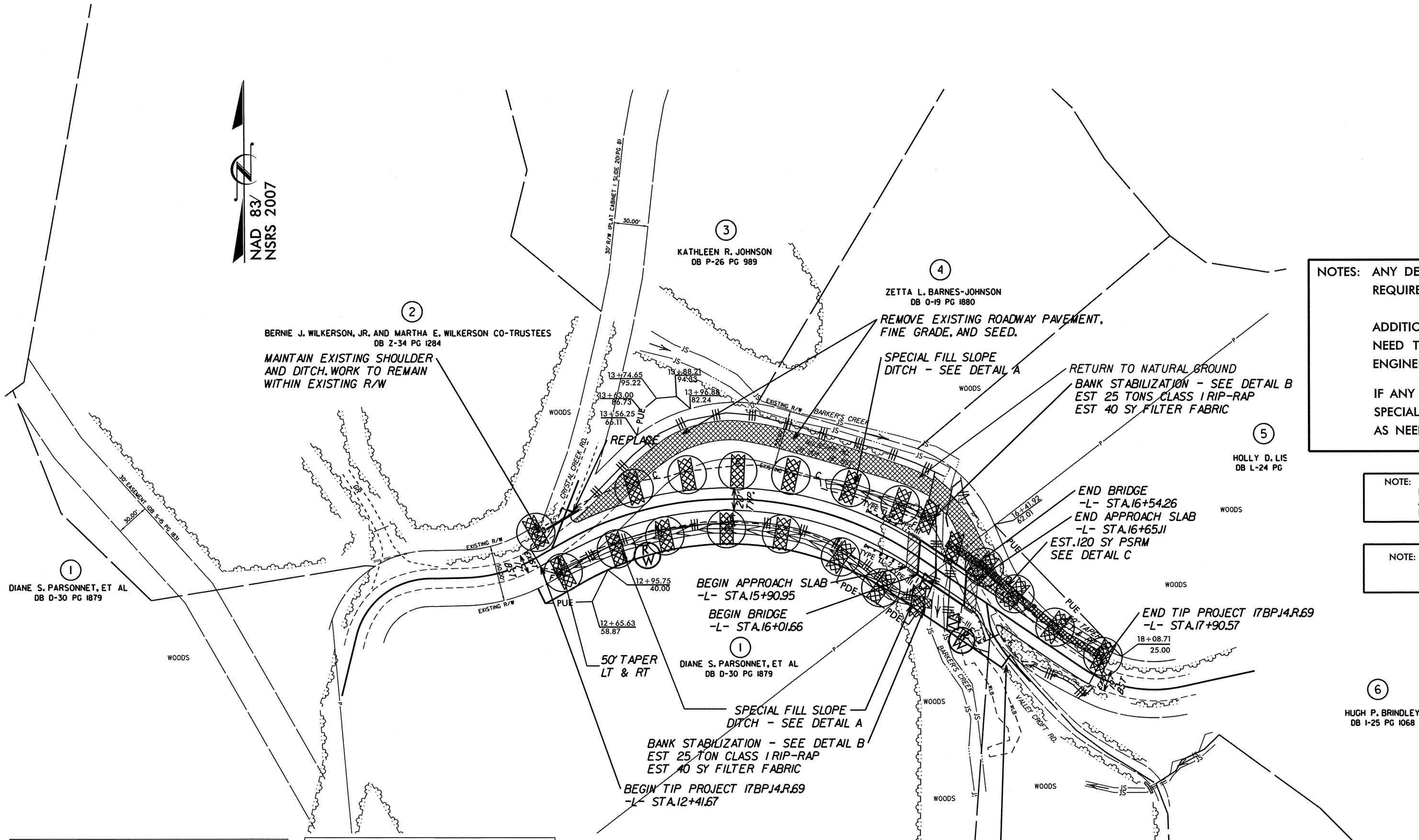

DETAIL A

SPECIAL FILL SLOPE 'V' DITCH

(Not to Scale)

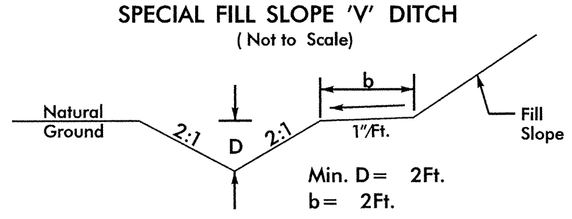

FROM –L– STA. 15+10 TO STA. 15+90 LT
FROM –L– STA. 12+50 TO STA. 16+20 RT

DETAIL B

RIP RAP AT EMBANKMENT

(Not to Scale)

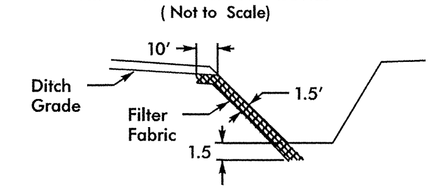

Type of Liner= Filter Fabric & Class I Rip-Rap

DETAIL C

ROADSIDE 'V' DITCH

(Not to Scale)

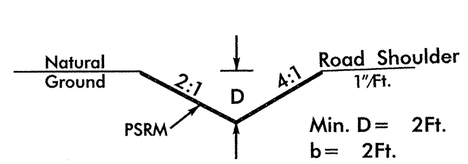

FROM –L– STA. 16+35 TO STA. 17+90 LT

PROJECT REFERENCE NO.	SHEET NO.
17BP.14.R.69	RF-1
R/W SHEET NO.	
ROADWAY DESIGN ENGINEER	HYDRAULICS ENGINEER

PLANTING DETAILS

LIVE STAKES PLANTING DETAIL

LIVE STAKE

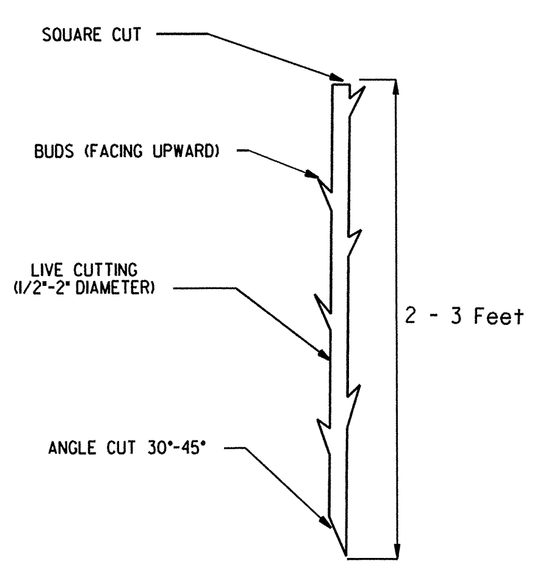

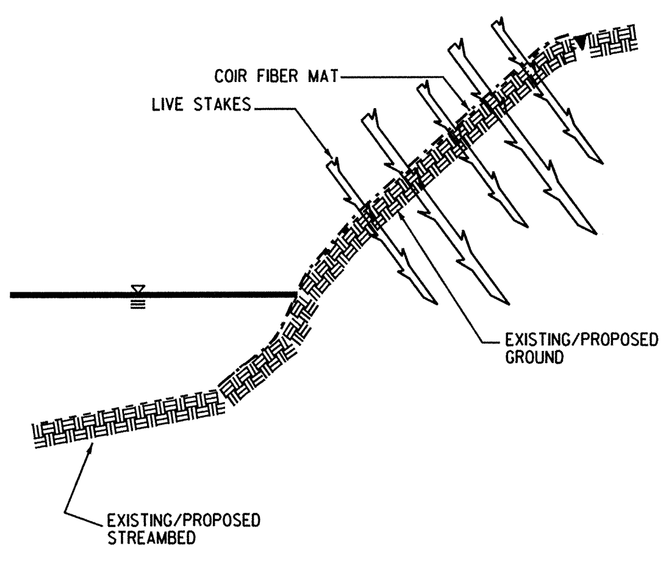

BANK STABILIZATION WITH LIVE STAKES

NOTE:
LIVE STAKES SHALL BE SPACED APPROXIMATELY 4 FEET ON CENTER
LIVE STAKES SHALL BE DRIVEN UNTIL APPROXIMATELY 3/4 OF LIVE STAKE IS WITHIN GROUND

BAREROOT PLANTING DETAIL DIBBLE PLANTING METHOD USING THE KBC PLANTING BAR

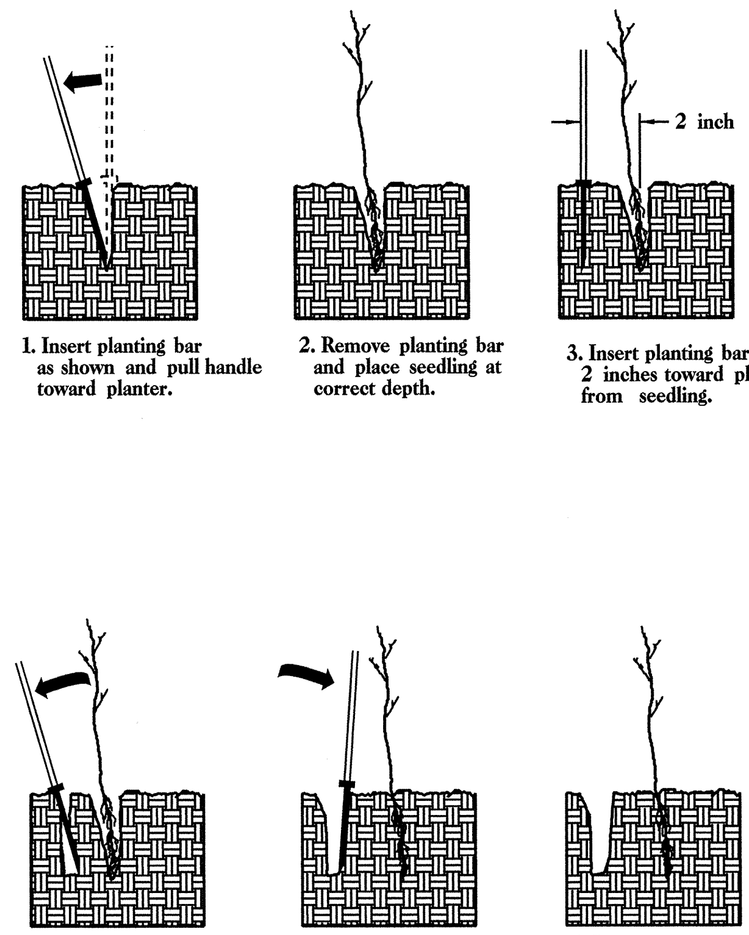

1. Insert planting bar as shown and pull handle toward planter.
2. Remove planting bar and place seedling at correct depth.
3. Insert planting bar 2 inches toward planter from seedling.
4. Pull handle of bar toward planter, firming soil at bottom.
5. Push handle forward firming soil at top.
6. Leave compaction hole open. Water thoroughly.

PLANTING NOTES:

PLANTING BAG
During planting, seedlings shall be kept in a moist canvas bag or similar container to prevent the root systems from drying.

KBC PLANTING BAR
Planting bar shall have a blade with a triangular cross section, and shall be 12 inches long, 4 inches wide and 1 inch thick at center.

ROOT PRUNING
All seedlings shall be root pruned, if necessary, so that no roots extend more than 10 inches below the root collar.

☐ TYPE 1 STREAMBANK REFORESTATION SHALL BE PLANTED 3 FT. TO 5 FT. ON CENTER, RANDOM SPACING, AVERAGING 4 FT. ON CENTER, APPROXIMATELY 2724 PLANTS PER ACRE.

☐ TYPE 2 STREAMBANK REFORESTATION SHALL BE PLANTED 6 FT. TO 10 FT. ON CENTER, RANDOM SPACING, AVERAGING 8 FT. ON CENTER, APPROXIMATELY 680 PLANTS PER ACRE.

☐ NOTE: TYPE 1 AND TYPE 2 STREAMBANK REFORESTATION SHALL BE PAID FOR AS "STREAMBANK REFORESTATION"

STREAMBANK REFORESTATION TYPICAL

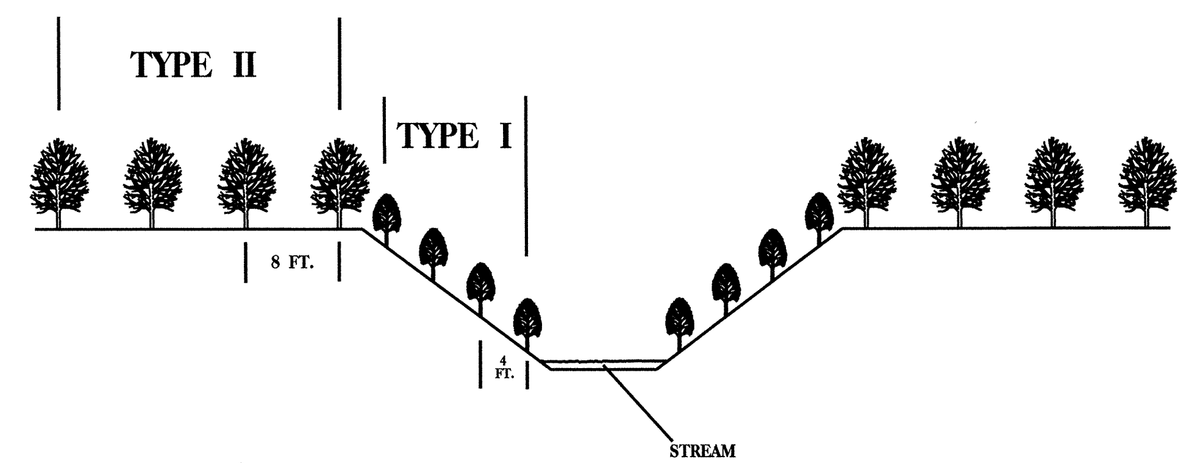

STREAMBANK REFORESTATION

MIXTURE, TYPE, SIZE, AND FURNISH SHALL CONFORM TO THE FOLLOWING:

TYPE 1			
50%	SALIX NIGRA	BLACK WILLOW	2 ft - 3 ft LIVE STAKES
50%	CORNUS AMOMUM	SILKY DOGWOOD	2 ft - 3 ft LIVE STAKES
TYPE 2			
25%	LIRIODENDRON TULIPIFERA	TULIP POPLAR	12 in - 18 in BR
25%	PLATANUS OCCIDENTALIS	SYCAMORE	12 in - 18 in BR
25%	PRUNUS SEROTINA	BLACK CHERRY	12 in - 18 in BR
25%	BETULA NIGRA	RIVER BIRCH	12 in - 18 in BR

☐ SEE PLAN SHEETS FOR AREAS TO BE PLANTED

STREAMBANK REFORESTATION DETAIL SHEET 1 OF 2

N.C.D.O.T. - ROADSIDE ENVIRONMENTAL UNIT

PROJECT REFERENCE NO.	SHEET NO.
17BP.14.R.69	RF-2
R/W SHEET NO.	
ROADWAY DESIGN ENGINEER	HYDRAULICS ENGINEER

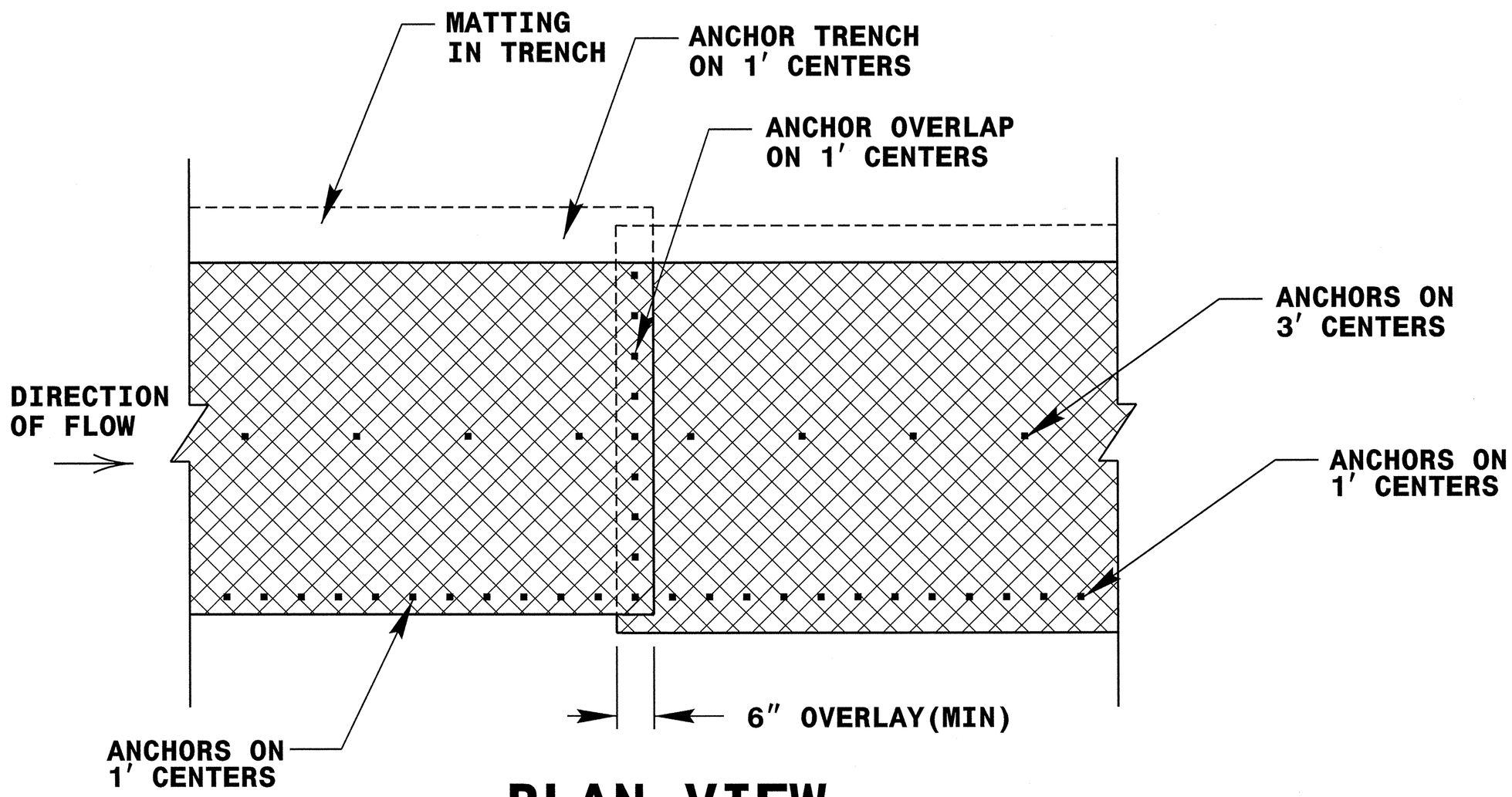

PLAN VIEW

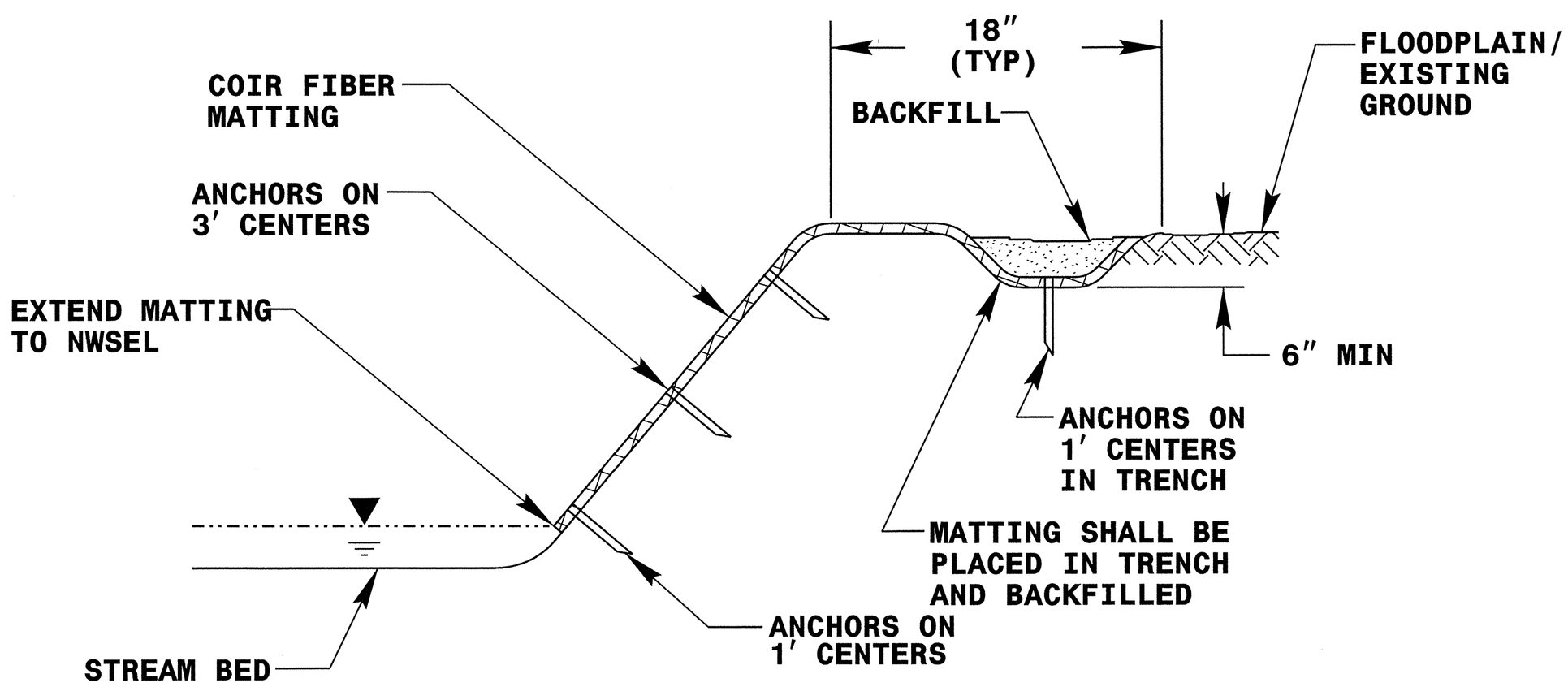

TYPICAL CROSS SECTION

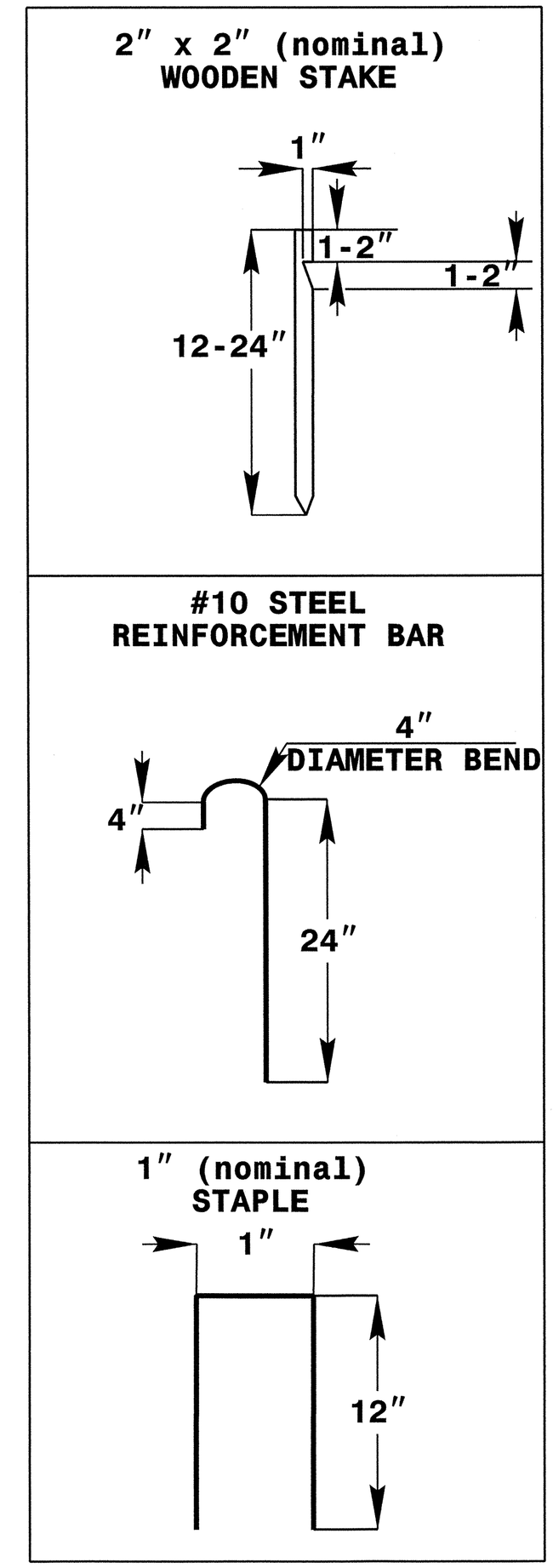

ANCHOR OPTIONS

COIR FIBER MATTING DETAIL

NOT TO SCALE

STREAMBANK REFORESTATION

DETAIL SHEET 2 OF 2

N.C.D.O.T.- ROADSIDE ENVIRONMENTAL UNIT

T.I.P. NO.	SHEET NO.
17BP.14.R.69	UBO–1

STATE OF NORTH CAROLINA
DIVISION OF HIGHWAYS

UTILITIES BY OTHERS PLANS
MACON COUNTY

LOCATION: BRIDGE 115 OVER BAKERS CREEK ON SR 1104 (MULBERRY RD.)

TYPE OF WORK: ELECTRIC, TELEPHONE

NAD 83/
NSRS 2007

TIP PROJECT: 17BP.14.R.71

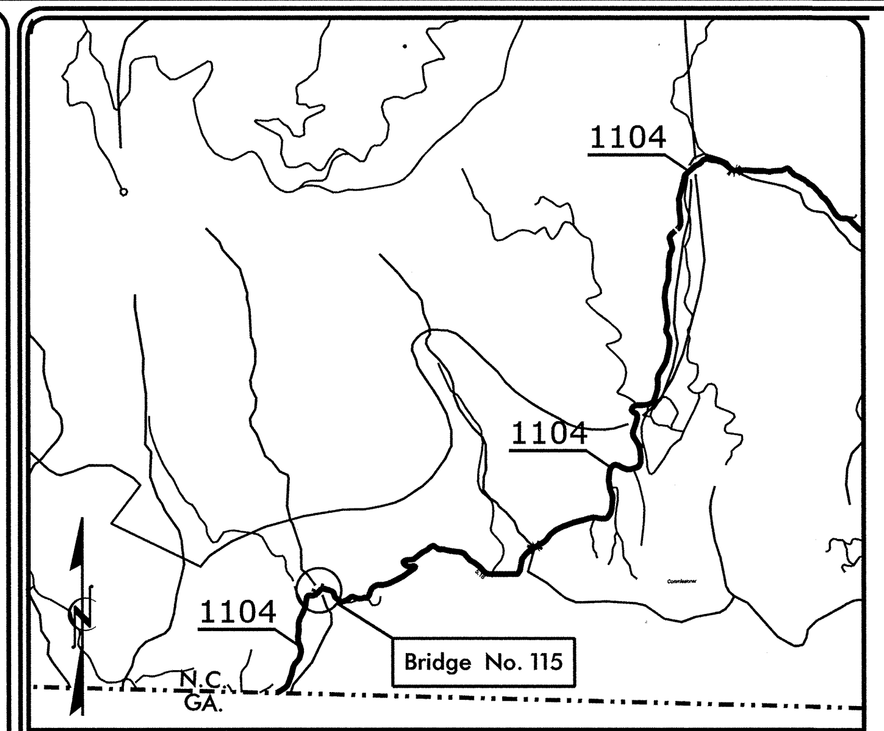

VICINITY MAP

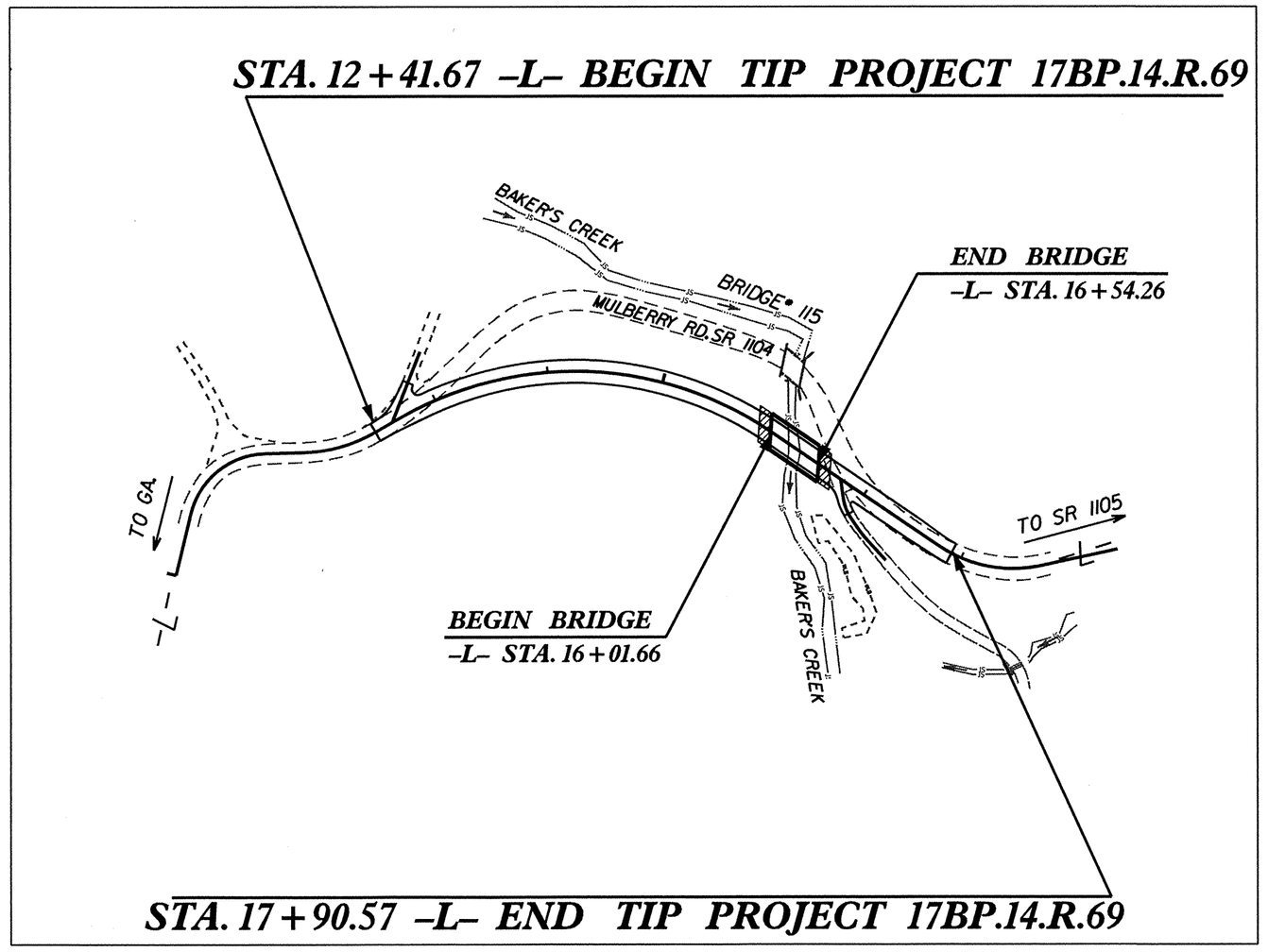

GRAPHIC SCALES

50 25 0 50 100
PLANS

50 25 0 50 100
PROFILE (HORIZONTAL)

10 5 0 10 20
PROFILE (VERTICAL)

INDEX OF SHEETS

SHEET NO.	DESCRIPTION
UBO–1	TITLE SHEET
UBO–1A	UTILITIES PLAN SHEETS SYMBOLS
UBO–2	UTILITY BY OTHERS PLAN SHEETS

UTILITY OWNERS ON PROJECT

(1) DUKE ENERGY
(2) WINDSTREAM COMMUNICATIONS

PREPARED IN THE OFFICE OF:
DIVISION OF HIGHWAYS
UTILITIES UNIT
UTILITIES ENGINEERING

1591 MAIL SERVICES CENTER
RALEIGH NC 27699–1591
PHONE (919) 707–6690
FAX (919) 250–4151

Roger Worthington, P.E. UTILITIES SECTION ENGINEER
_____ P.E. UTILITIES SQUAD LEADER PROJECT ENGINEER
_____ UTILITIES PROJECT DESIGNER

09/08/99
11:12:29 AM
R:\3215\Bridge115\Utilities\Rdy_Ut\Proj\17BP14R69_UBO_TSH.dgn
bgross

PROJECT REFERENCE NO.	SHEET NO.
17BP.14.R.69	UBO-1A

STATE OF NORTH CAROLINA
DIVISION OF HIGHWAYS

UTILITIES PLAN SHEET SYMBOLS

PROPOSED WATER SYMBOLS

- Water Line (Sized as Shown)
- 11¼ Degree Bend
- 22½ Degree Bend
- 45 Degree Bend
- 90 Degree Bend
- Plug
- Tee
- Cross
- Reducer
- Gate Valve — GV
- Butterfly Valve — BV
- Tapping Valve — TGV
- Line Stop — LS
- Line Stop with Bypass — LS/BP
- Blow Off — BO
- Fire Hydrant — PFH
- Relocate Fire Hydrant — RFH
- Remove Fire Hydrant — REM FH
- Water Meter — PWM
- Relocate Water Meter — RWM
- Remove Water Meter — REM WM
- Water Pump Station — PS(W)
- RPZ Backflow Preventer — PBPZ
- DCV Backflow Preventer — PBFP
- Relocate RPZ Backflow Preventer — RBPZ
- Relocate DCV Backflow Preventer — RBFP

PROPOSED SEWER SYMBOLS

- Gravity Sewer Line (Sized as Shown)
- Force Main Sewer Line (Sized as Shown)
- Manhole (Sized per Note)
- Sewer Pump Station — PS(SS)

PROPOSED MISCELLANOUS UTILITIES SYMBOLS

- Power Pole
- Telephone Pole
- Joint Use Pole
- Telephone Pedestal — TEL PED
- Utility Line by Others (Type as Shown)
- Trenchless Installation
- Encasement by Open Cut
- Encasement
- Thrust Block
- Air Release Valve — AR
- Utility Vault — UV
- Concrete Pier — CP
- Steel Pier — SP
- Plan Note — NOTE
- Pay Item Note — PAY ITEM

EXISTING UTILITIES SYMBOLS

- Power Pole
- Telephone Pole
- Joint Use Pole
- Utility Pole
- Utility Pole with Base
- H-Frame Pole
- Power Transmission Line Tower
- Water Manhole
- Power Manhole
- Telephone Manhole
- Sanitary Sewer Manhole
- Hand Hole for Cable
- Power Transformer
- Telephone Pedestal
- CATV Pedestal
- Gas Valve
- Gas Meter
- Located Miscellaneous Utility Object
- Abandoned According to Utility Records — AATUR
- End of Information — E.O.I.
- *Underground Power Line
- *Underground Telephone Cable
- *Underground Telephone Conduit
- *Underground Fiber Optics Telephone Cable
- *Underground TV Cable
- *Underground Fiber Optics TV Cable
- *Underground Gas Pipeline
- Aboveground Gas Pipeline — A/G Gas
- *Underground Water Line
- Aboveground Water Line — A/G Water
- *Underground Gravity Sanitary Sewer Line
- Aboveground Gravity Sanitary Sewer Line — A/G Sanitary Sewer
- *Underground SS Forced Main Line
- Underground Unknown Utility Line
- SUE Test Hole
- Water Meter
- Water Valve
- Fire Hydrant
- Sanitary Sewer Cleanout

*For Existing Utilities

- Utility Line Drawn from Record (Type as Shown)
- Designated Utility Line (Type as Shown)

REV: 2/1/2012

5/14/99

12:27:52 PM
\Bridge115\Utilities\Rdy_Ut\Proj\17BP14R69_UBO_TSH.dgn
bwrass

PROJECT REFERENCE NO.	SHEET NO.
17BPJ4.R.69	UBO-2

UTILITIES BY OTHERS
BRIDGE: 115

NOTE:
ALL PROPOSED UTILITY WORK SHOWN ON THIS SHEET WILL BE DONE BY OTHERS

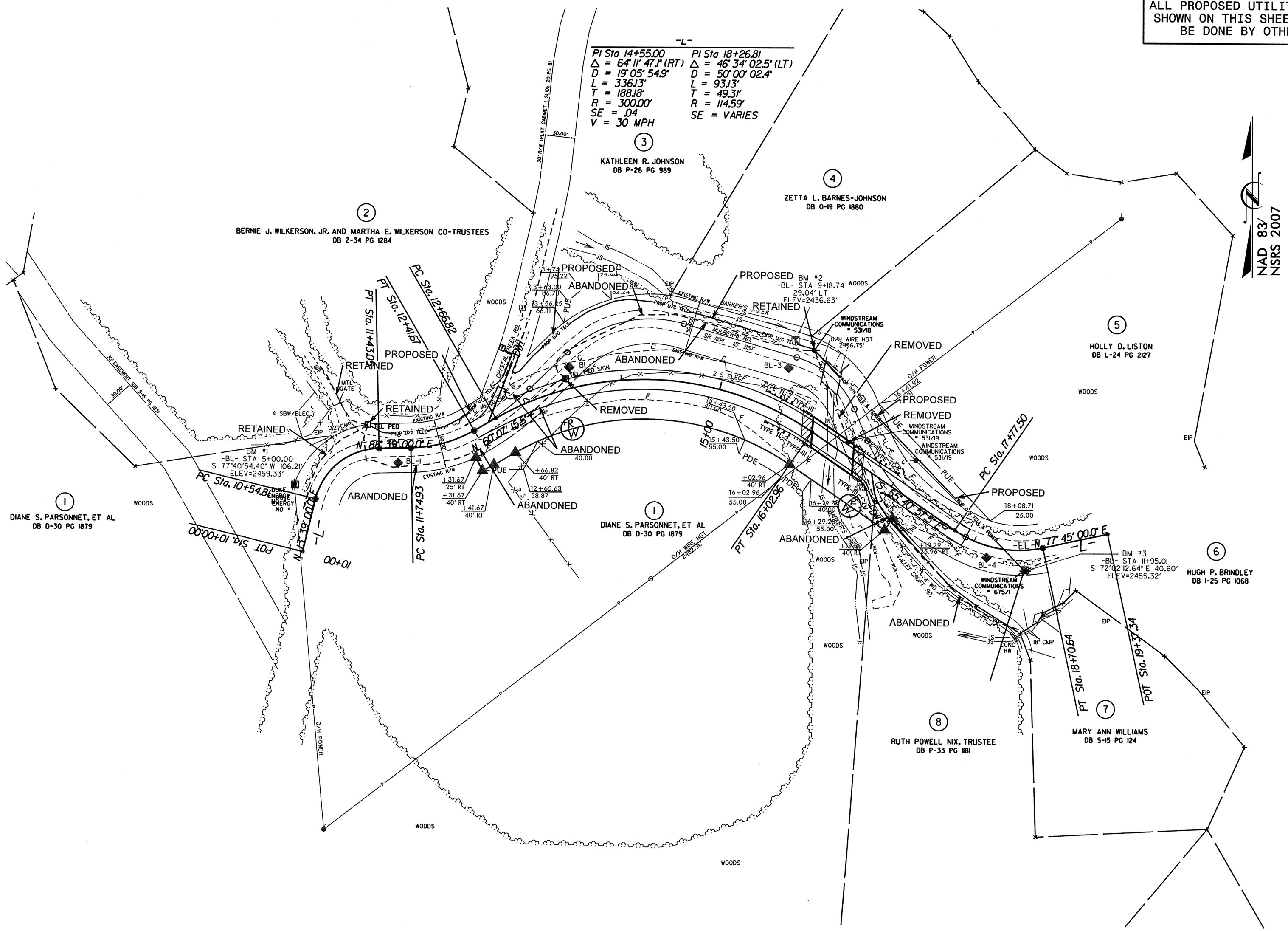

PROJECT REFERENCE NO.	SHEET NO.
17BP.14.R.69	X-1A

STATE OF NORTH CAROLINA
DIVISION OF HIGHWAYS

CROSS SECTION SUMMARY

LOCATION	UNCLASSIFIED EXCAVATION	EMBT+%
-L- 12+41.67 TO -L- 12+50	6	0
-L- 12+50 TO 13+00	74	3
-L- 13+00 TO 13+50	61	32
-L- 13+50 TO 14+00	41	55
-L- 14+00 TO 14+50	41	71
-L- 14+50 TO 15+00	39	101
-L- 15+00 TO 15+50	41	201
-L- 15+50 TO 16+00	30	332
-L- 16+00 TO 16+50	15	207
-L- 16+50 TO 17+00	10	50
-L- 17+00 TO 17+50	17	31
-L- 17+50 TO 17+90.57	11	2

Note: Embankment column does not include backfill for undercut.

Approximate quantities only. Unclassified excavation, borrow excavation, shoulder borrow, fine grading, clearing and grubbing, breaking of existing pavement and removal of existing pavement will be paid for at the lump sum price for "Grading".

12/17/37 PM
H:\3215\Bridge115\Roadway\Proj\17BP14R69_RDY_TYP.dgn
Bentley

0 10 20	PROJ. REFERENCE NO.	SHEET NO.
	17BP.14.R.69	X-1

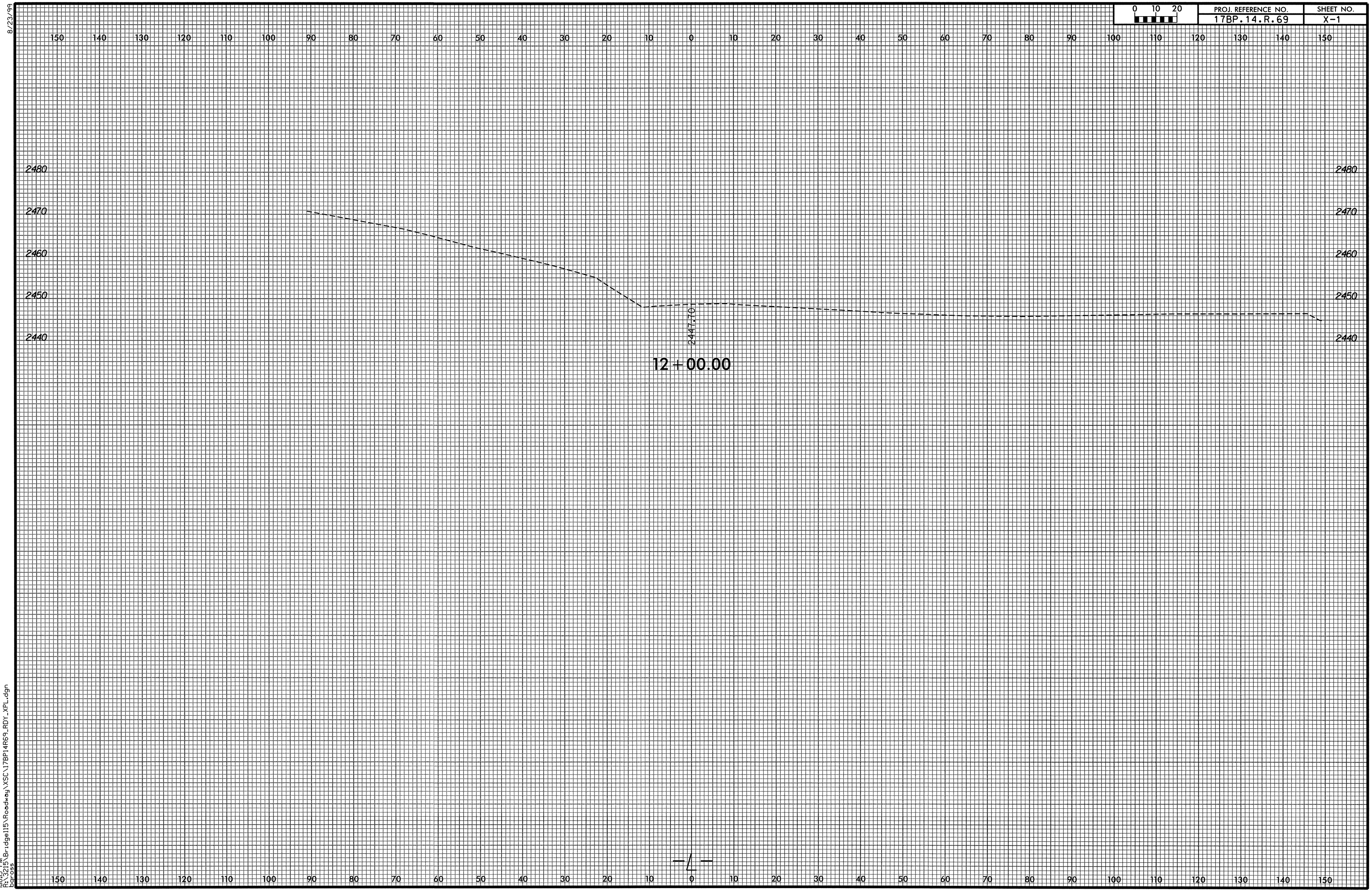

8/23/99

14:32:15 PM
bar-oss
Bridge115\Roadway\XSC\17BP14R69_RDY_XPL.dgn

8/23/99

0 10 20	PROJ. REFERENCE NO.	SHEET NO.
	17BP.14.R.69	X-2

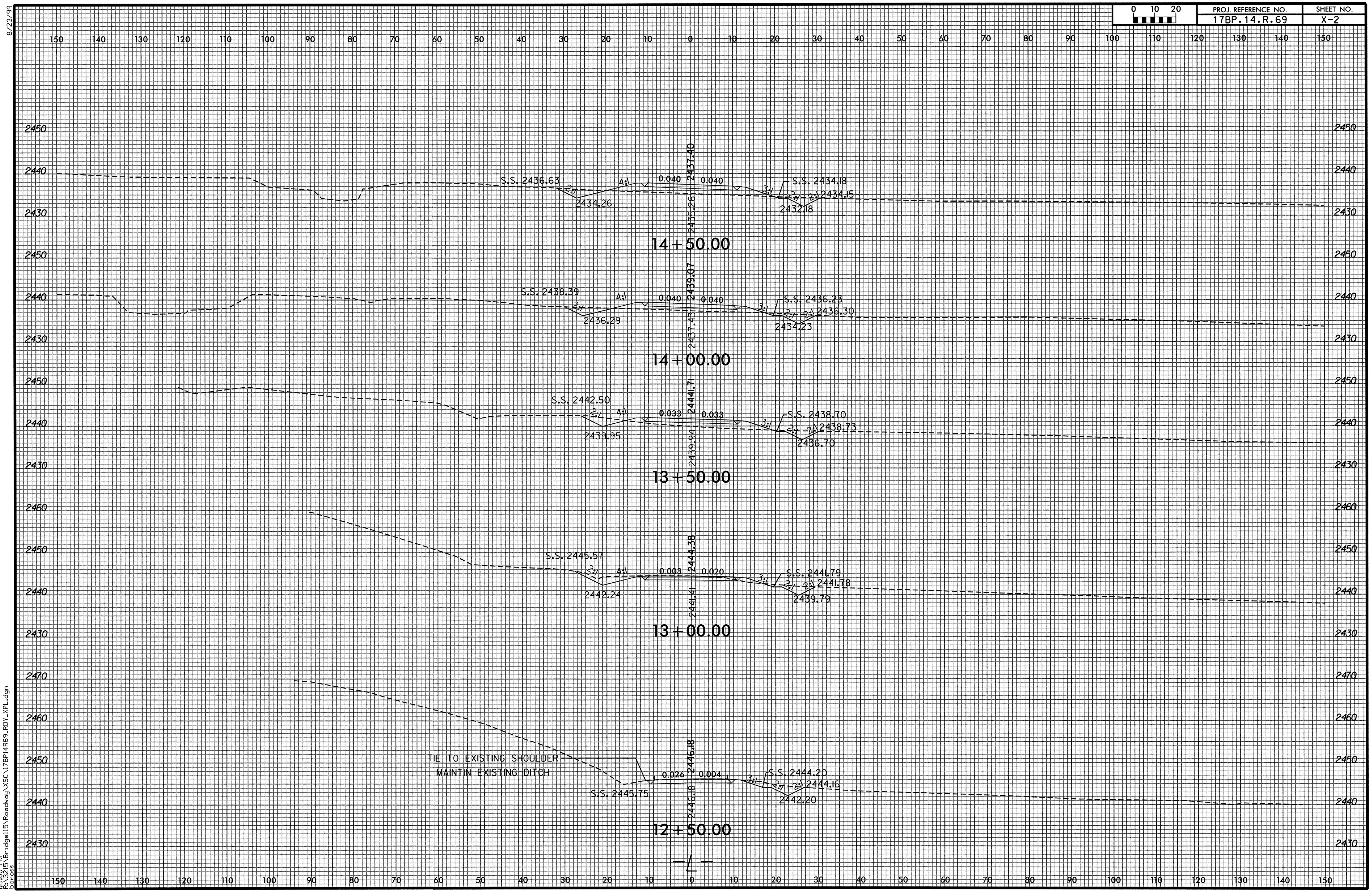

11:00 PM
R:\3215\Bridge115\Roadway\XSC\17BP14R69_RDY_XPL.dgn
Bgross

8/23/99

0 10 20	PROJ. REFERENCE NO.	SHEET NO.
	17BP.14.R.69	X-3

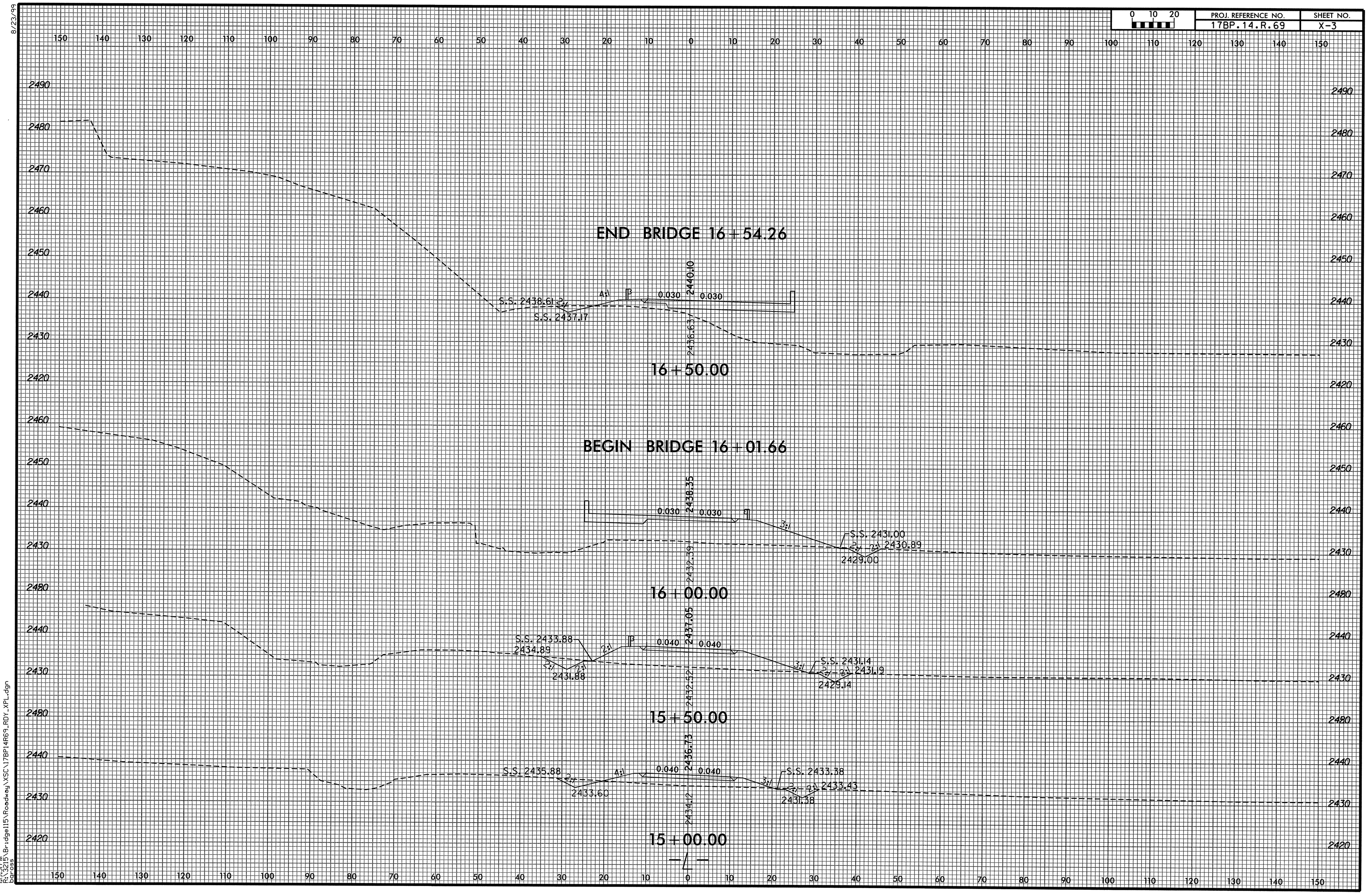

H:\3:21PM
R:\3215\Bridge115\Roadway\XSC\17BP14R69_RDY_XPL.dgn
bgr-oss

0 10 20	PROJ. REFERENCE NO.	SHEET NO.
	17BP.14.R.69	X-4

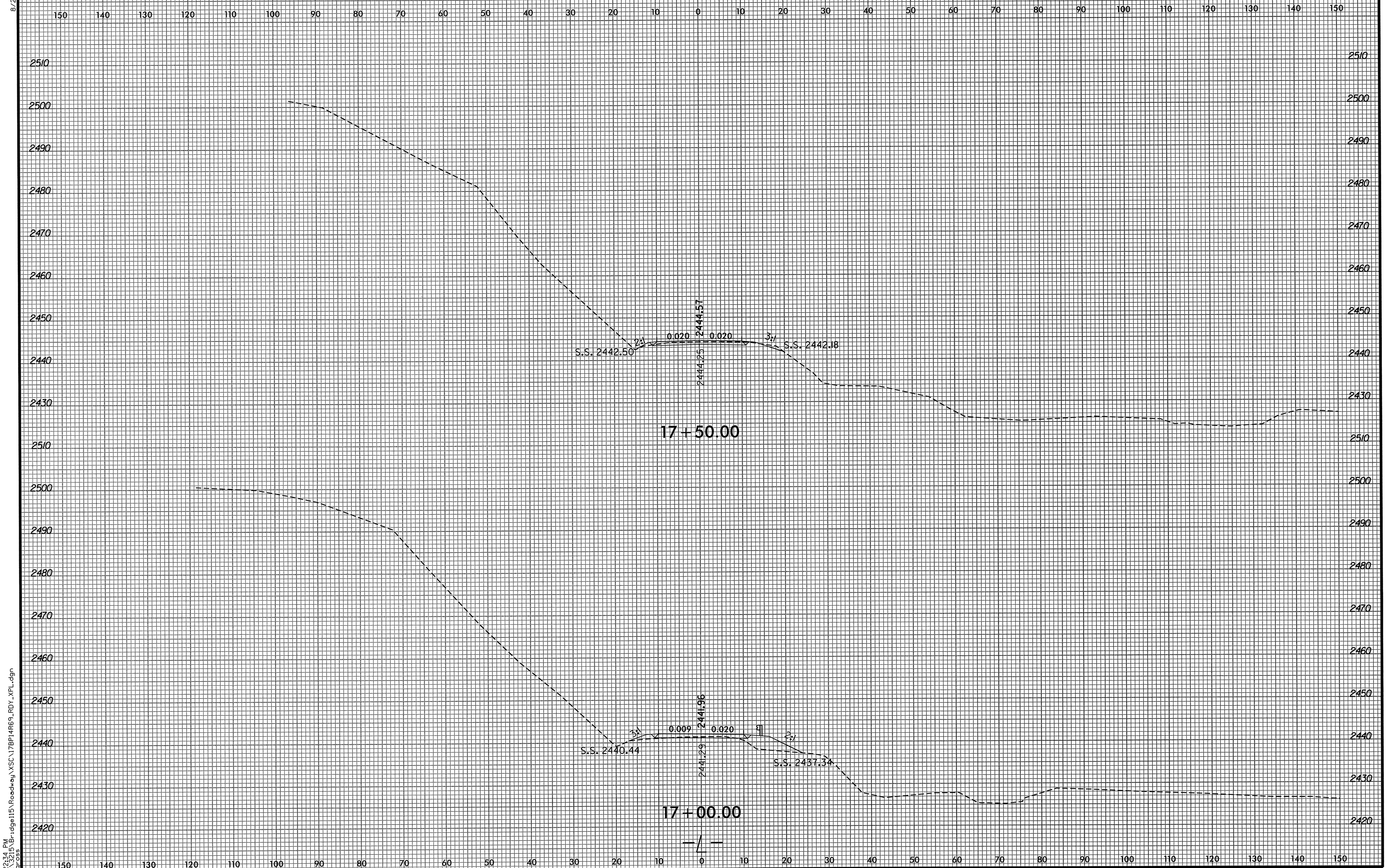

8/23/99

H:22:34 PM
H:\2015\BridgeI15\Roadway\XSC\17BP14R69_RDY_XPL.dgn
Bridge

8/23/99

0 10 20	PROJ. REFERENCE NO.	SHEET NO.
	17BP.14.R.69	X-5

12:03:35 PM
8/23/99
R:\0335\Bridge115\Roadway\XSC\17BP14R69_RDY_XPL.dgn
barross

STATE	STATE PROJECT REFERENCE NO.	SHEET NO.	TOTAL SHEETS
N.C.	17BP.14.R.69	TS-0	

STATE PROJ. NO.	F.A. PROJ. NO.	DESCRIPTION
17BP.14.R.69		PE, R/W, UTIL
17BP.14.R.69		CONST.

STATE OF NORTH CAROLINA
DIVISION OF HIGHWAYS

MACON COUNTY

LOCATION: BRIDGE 115 OVER BAKERS CREEK ON SR 1104 (MULBERRY RD.)

TYPE OF WORK: GRADING, PAVING, DRAINAGE & STRUCTURE

NAD 83/
NSRS 2007

TIP PROJECT: 17BP.14.R.69

CONTRACT: DN00191

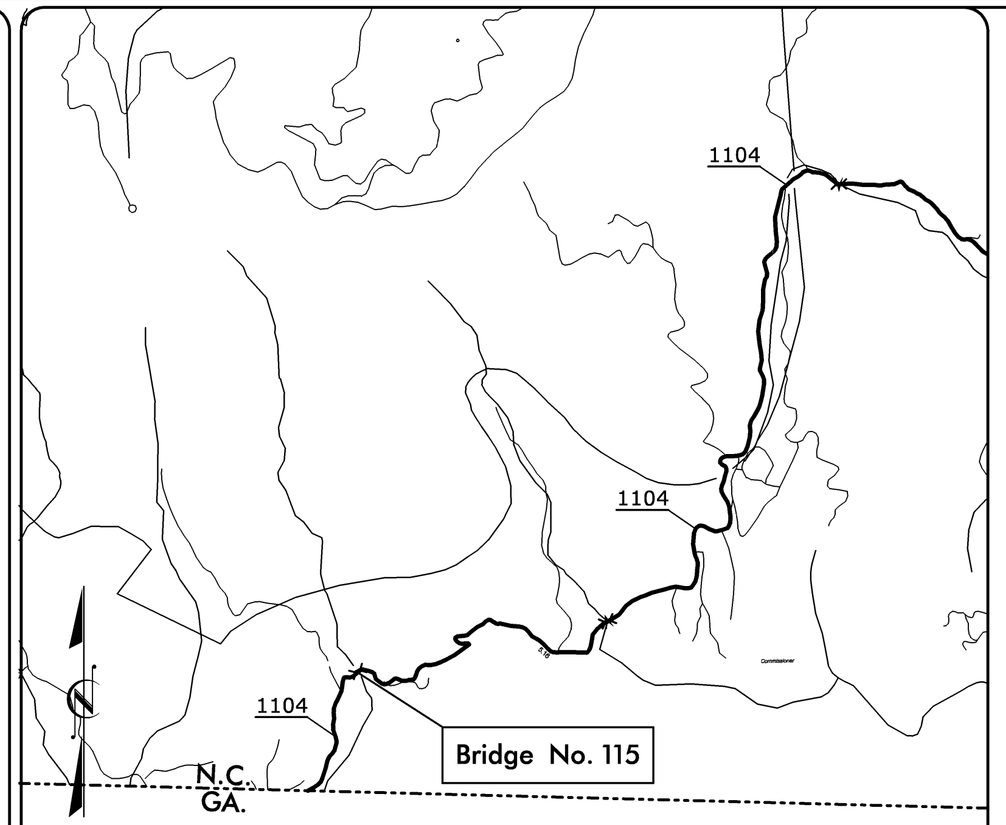

VICINITY MAP
(DETOUR AT BRIDGE)

STRUCTURE

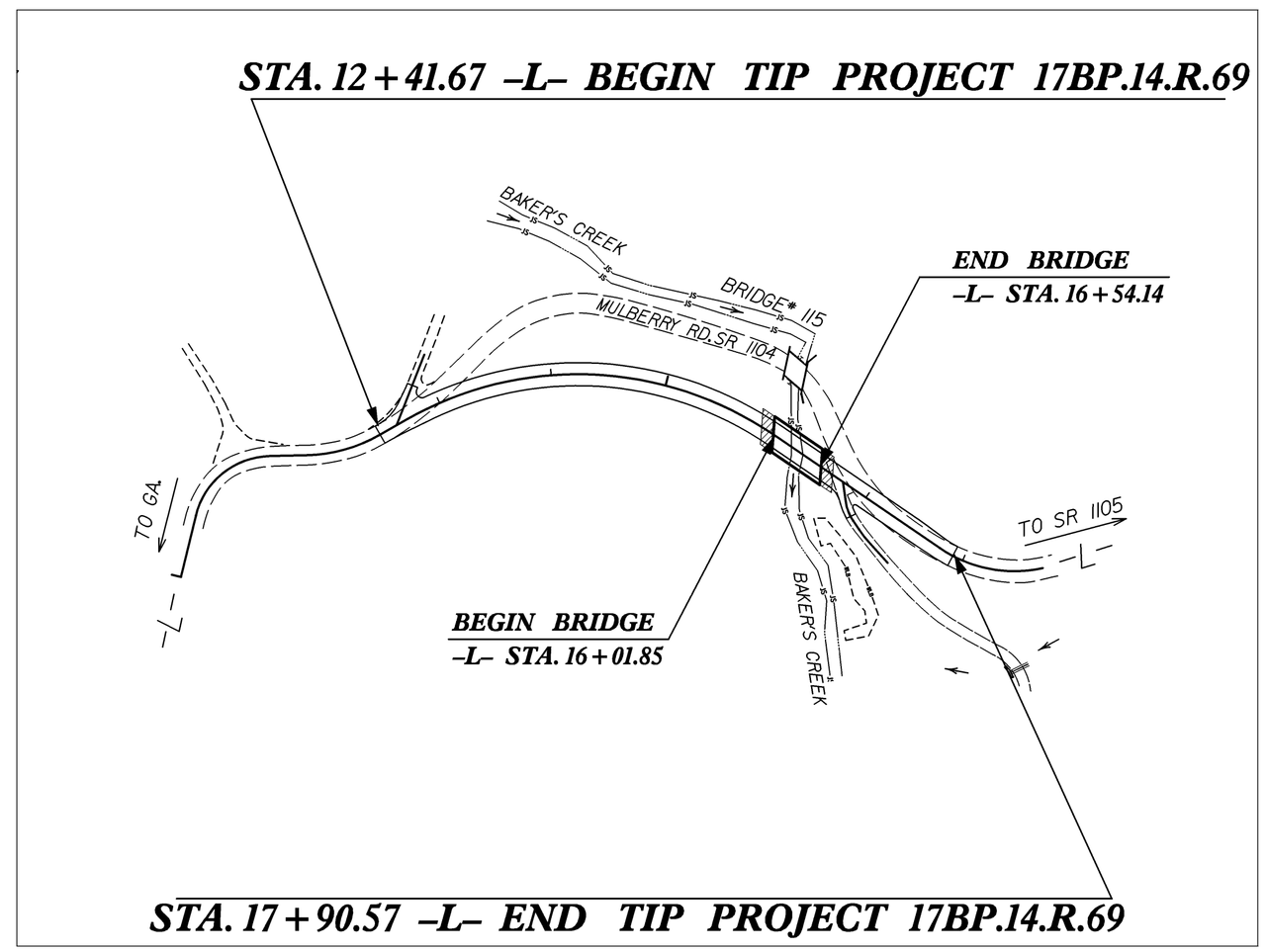

DESIGN DATA

ADT (2008) = 310
ADT (2025) = 620

V = 25 MPH

FUNC CLASS =
LOCAL
SUB-REGIONAL TIER

PROJECT LENGTH

LENGTH ROADWAY TIP PROJECT 17BP.14.R.69	=	*0.094 MI*
LENGTH STRUCTURE TIP PROJECT 17BP.14.R.69	=	*0.010 MI*
TOTAL LENGTH TIP PROJECT 17BP.14.R.69	=	*0.104 MI*

NCDOT CONTACT: JOSHUA DEYTON, P.E.
PROJECT ENGINEER

Prepared In the Office of:
Mattern & Craig
CONSULTING ENGINEERS - SURVEYORS
12 BROAD STREET
ASHEVILLE, NORTH CAROLINA 28801
(828) 254-2201 - FAX (828) 254-4562

2012 STANDARD SPECIFICATIONS

RIGHT OF WAY DATE:
JULY 22, 2013

LETTING DATE:
FEBRUARY, 2014

JAMES B. VOSO, P.E.
PROJECT ENGINEER

STEVEN A. CAMPBELL, P.E.
PROJECT DESIGN ENGINEER

BRIDGE ENGINEER

SIGNATURE: *P.E.*

DIVISION OF HIGHWAYS
STATE OF NORTH CAROLINA

P.E.
STATE HIGHWAY DESIGN ENGINEER

$$$$SYSTIME$$$$
$$$$USERNAME$$$$
$$$$DGN$$$$

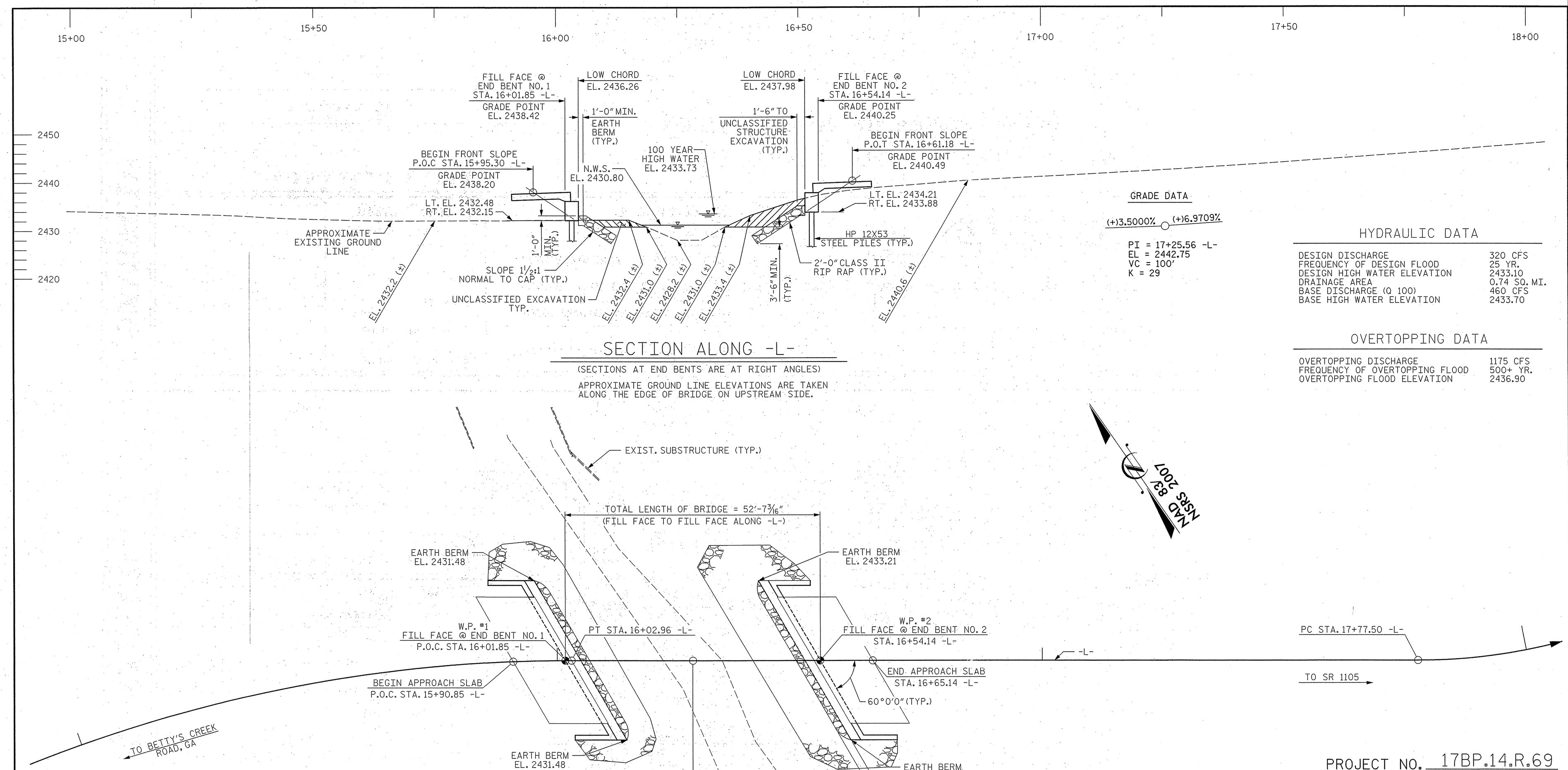

SECTION ALONG -L-

(SECTIONS AT END BENTS ARE AT RIGHT ANGLES)

APPROXIMATE GROUND LINE ELEVATIONS ARE TAKEN ALONG THE EDGE OF BRIDGE ON UPSTREAM SIDE.

GRADE DATA

(+)3.5000% (+)6.9709%

PI = 17+25.56 -L-
EL = 2442.75
VC = 100'
K = 29

HYDRAULIC DATA

DESIGN DISCHARGE	320 CFS
FREQUENCY OF DESIGN FLOOD	25 YR.
DESIGN HIGH WATER ELEVATION	2433.10
DRAINAGE AREA	0.74 SQ. MI.
BASE DISCHARGE (Q 100)	460 CFS
BASE HIGH WATER ELEVATION	2433.70

OVERTOPPING DATA

OVERTOPPING DISCHARGE	1175 CFS
FREQUENCY OF OVERTOPPING FLOOD	500+ YR.
OVERTOPPING FLOOD ELEVATION	2436.90

PLAN

(PILES NOT SHOWN FOR CLARITY)

HORIZONTAL CURVE DATA -L-

PI Sta 14+55.00 -L-	PI Sta 18+26.81 -L-
Δ = 64° 11' 47.1" (RT)	Δ = 46° 34' 02.5" (LT)
D = 19° 05' 54.9"	D = 50° 00' 02.4"
L = 336.13'	L = 93.13'
T = 188.18'	T = 49.31'
R = 300.00'	R = 114.59'

PROJECT NO. 17BP.14.R.69

MACON COUNTY

STATION: 16+28.00 -L-

SHEET 1 OF 2 REPLACES BRIDGE NO. 115

STATE OF NORTH CAROLINA
DEPARTMENT OF TRANSPORTATION
RALEIGH

GENERAL DRAWING
FOR BRIDGE ON
SR 1104 OVER BAKER'S CREEK
BETWEEN BETTY'S
CREEK ROAD AND SR 1105

NORTH CAROLINA PROFESSIONAL SEAL 14302 ENGINEER STEVEN A. CAMPBELL 6/24/13

Prepared in the Office of: Mattern & Craig
CONSULTING ENGINEERS - SURVEYORS
12 BROAD STREET
ASHEVILLE, NORTH CAROLINA 28801
(828) 254-2201 - FAX (828) 254-4562

REVISIONS						
NO.	BY:	DATE:	NO.	BY:	DATE:	
1			3			
2			4			

SHEET NO. S-1
TOTAL SHEETS 13

DRAWN BY :	PFC	DATE :	2/13
CHECKED BY :	CMT	DATE :	2/13

B.M. #1: RAIL ROAD SPIKE IN BASE OF TELEPHONE POLE 24' LEFT STA. 10+61.40 -L- EL. 2459.33

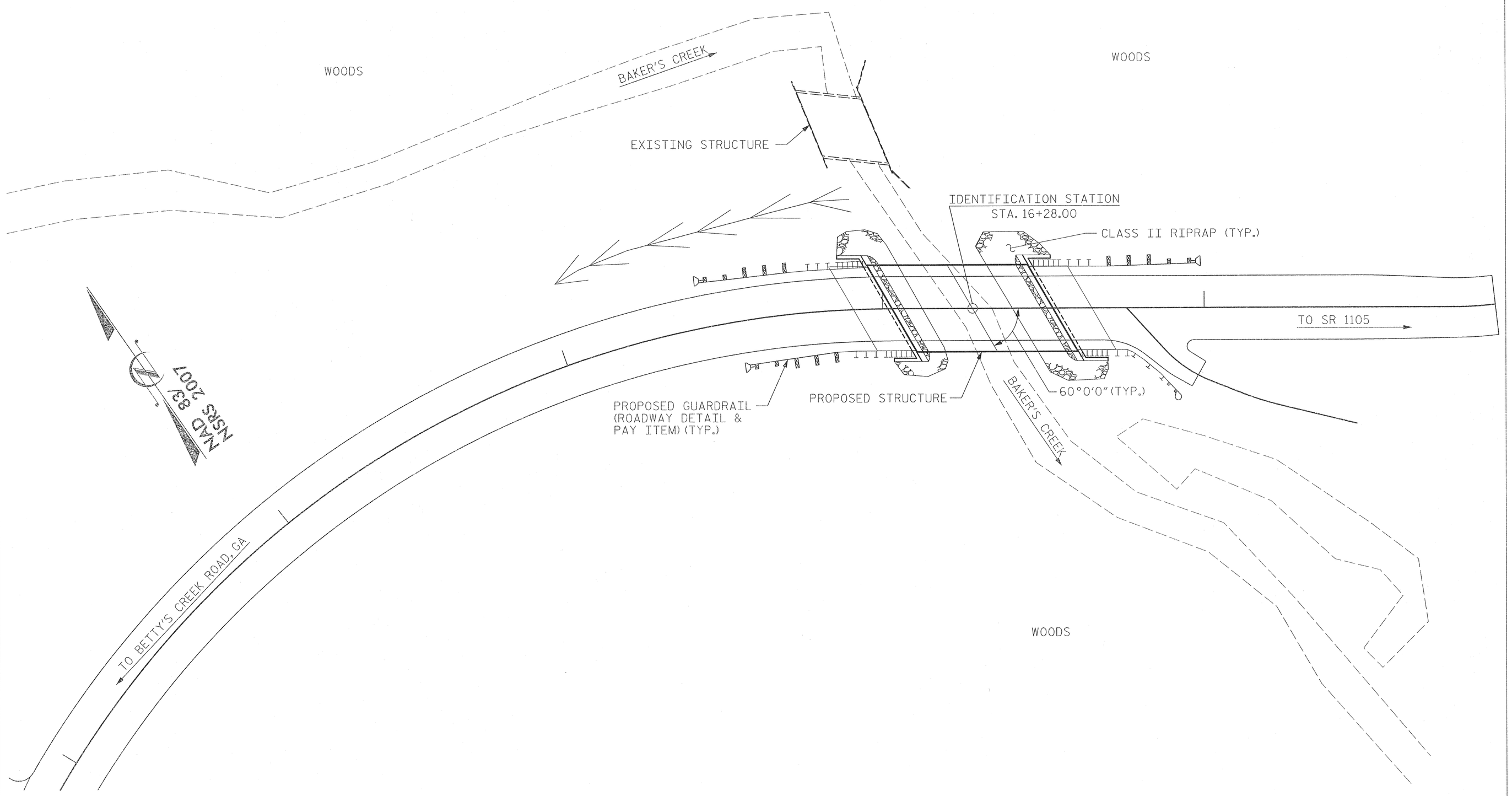

LOCATION SKETCH

NO KNOWN UTILITY CONFLICTS.

NOTES:

ASSUMED LIVE LOAD = HL-93 OR ALTERNATE LOADING.

FOR EROSION CONTROL MEASURES, SEE EROSION CONTROL PLANS.

THIS STRUCTURE HAS BEEN DESIGNED IN ACCORDANCE WITH THE AASHTO LRFD BRIDGE DESIGN SPECIFICATIONS.

THE EXISTING STRUCTURE CONSISTING OF 1 SPAN AT 20'-6", 19'-1" CLEAR ROADWAY WIDTH, TIMBER FLOOR ON TIMBER JOISTS, ON TIMBER CAPS WITH TIMBER POSTS AND SILLS, SHALL BE REMOVED. THE EXISTING BRIDGE IS CURRENTLY POSTED BELOW THE LEGAL LOAD LIMIT. SHOULD THE STRUCTURAL INTEGRITY OF THE BRIDGE FURTHER DETERIORATE, THE LOAD LIMITATION MAY BE REDUCED AS FOUND NECESSARY DURING THE LIFE OF THE PROJECT.

REMOVAL OF THE EXISTING BRIDGE SHALL BE PERFORMED AS NOT TO ALLOW DEBRIS TO FALL INTO THE WATER. THE CONTRACTOR SHALL REMOVE THE BRIDGE AND SUBMIT PLANS FOR DEMOLITION IN ACCORDANCE WITH ARTICLE 402-2 OF THE STANDARD SPECIFICATIONS.

THE MATERIAL SHOWN IN THE CROSS-HATCHED AREA SHALL BE EXCAVATED FOR A DISTANCE OF 25 FT± EACH SIDE OF CENTERLINE ROADWAY AS DIRECTED BY THE ENGINEER. THIS WORK WILL BE PAID FOR AT THE CONTRACT LUMP SUM PRICE FOR UNCLASSIFIED STRUCTURE EXCAVATION. SEE SECTION 412 OF THE STANDARD SPECIFICATIONS.

THE SUBSTRUCTURE OF THE EXISTING BRIDGE INDICATED ON THE PLANS IS FROM THE BEST INFORMATION AVAILABLE. SINCE THIS INFORMATION IS SHOWN FOR THE CONVENIENCE OF THE CONTRACTOR, THE CONTRACTOR SHALL HAVE NO CLAIM WHATSOEVER AGAINST THE DEPARTMENT OF TRANSPORTATION FOR ANY DELAYS OR ADDITIONAL COSTS INCURRED BASED ON DIFFERENCES BETWEEN THE EXISTING BRIDGE SUBSTRUCTURE SHOWN ON THE PLANS AND THE ACTUAL CONDITIONS AT THE PROJECT SITE.

FOR PILES, SEE SECTION 450 OF THE STANDARD SPECIFICATIONS.

PILES AT END BENT NO. 1 AND END BENT NO. 2 ARE DESIGNED FOR A FACTORED RESISTANCE OF 70 TONS PER PILE.

DRIVE PILES AT END BENT NO. 1 AND END BENT NO. 2 TO A REQUIRED DRIVING RESISTANCE OF 120 TONS PER PILE.

STEEL H-PILE POINTS ARE REQUIRED FOR ALL STEEL H-PILES AT END BENT NO. 1 AND END BENT NO. 2. FOR STEEL PILE POINTS, SEE SECTION 450 OF THE STANDARD SPECIFICATIONS.

TESTING PILES WITH THE PDA DURING DRIVING, RESTRIKING OR REDRIVING MAY BE REQUIRED. THE ENGINEER WILL DETERMINE THE NEED FOR PDA TESTING. FOR PDA TESTING, SEE SECTION 450 OF THE STANDARD SPECIFICATIONS AND FOR PILE DRIVING CRITERIA, SEE PILE DRIVING CRITERIA PROVISION.

FOR SUBMITTAL OF WORKING DRAWINGS, SEE SPECIAL PROVISIONS.

FOR FALSEWORK AND FORMWORK, SEE SPECIAL PROVISIONS.

FOR CRANE SAFETY, SEE SPECIAL PROVISIONS.

FOR OTHER DESIGN DATA AND GENERAL NOTES, SEE SHEET SN.

THIS STRUCTURE HAS BEEN DESIGNED IN ACCORDANCE WITH "HEC 18-EVALUATING SCOUR AT BRIDGES."

FOR GROUT FOR STRUCTURES, SEE SPECIAL PROVISIONS.

THIS BRIDGE IS LOCATED IN SEISMIC ZONE 1.

ASPHALT WEARING SURFACE IS INCLUDED IN THE ROADWAY QUANTITY ON ROADWAY PLANS.

TOTAL BILL OF MATERIAL

	REMOVAL OF EXISTING STRUCTURE	UNCLASSIFIED STRUCTURE EXCAVATION	CLASS A CONCRETE	BRIDGE APPROACH SLABS	REINFORCING STEEL	VERTICAL CONCRETE BARRIER RAIL	HP 12X53 STEEL PILES		STEEL PILE POINTS	PLAIN RIP RAP CLASS II (2'-0" THICK)	GEOTEXTILE FOR DRAINAGE	ELASTOMERIC BEARINGS	3'-0" X 1'-9" PRESTRESSED CONCRETE CORED SLAB UNITS	
	LUMP SUM	LUMP SUM	CU. YDS.	LUMP SUM	LBS.	LIN. FT.	NO.	LIN. FT.	EACH	TONS	SQ. YD.	LUMP SUM	NO.	LIN. FT.
SUPERSTRUCTURE	LUMP SUM			LUMP SUM		100.29						LUMP SUM	9	450
END BENT NO. 1		LUMP SUM	20.9		2584		5	180	5	50	55			
END BENT NO. 2		LUMP SUM	20.9		2584		5	115	5	71	79			
TOTAL	LUMP SUM	LUMP SUM	41.8	LUMP SUM	5168	100.29	10	295	10	121	134	LUMP SUM	9	450

PROJECT NO. 17BP.14.R.69

MACON COUNTY

STATION: 16+28.00 -L-

SHEET 2 OF 2 REPLACES BRIDGE NO. 115

STATE OF NORTH CAROLINA
DEPARTMENT OF TRANSPORTATION
RALEIGH

GENERAL DRAWING
FOR BRIDGE 115
SR 1104 OVER BAKER'S CREEK
BETWEEN BETTY'S
CREEK ROAD AND SR 1105

NORTH CAROLINA PROFESSIONAL SEAL 030308 ENGINEER STEVEN A. CAMPBELL
1-8-19

Prepared in the Office of:
Mattern & Craig
CONSULTING ENGINEERS - SURVEYORS
12 BROAD STREET
ASHEVILLE, NORTH CAROLINA 28801
(828) 254-2201 - FAX (828) 254-4562

REVISIONS						SHEET NO.
NO.	BY:	DATE:	NO.	BY:	DATE:	S-2
1			3			TOTAL SHEETS
2			4			13

DRAWN BY : PFC DATE : 2/13
CHECKED BY : CMT DATE : 2/13

LOAD AND RESISTANCE FACTOR RATING (LRFD) SUMMARY FOR PRESTRESSED CONCRETE GIRDERS

LEVEL		VEHICLE	WEIGHT (W) (TONS)	CONTROLLING LOAD RATING	MINIMUM RATING FACTORS (RF)	TONS = W X RF	STRENGTH I LIMIT STATE											SERVICE III LIMIT STATE						COMMENT NUMBER
								MOMENT					SHEAR						MOMENT					
							LIVELOAD FACTORS	DISTRIBUTION FACTORS (DF)	RATING FACTOR	SPAN	GIRDER LOCATION	DISTANCE FROM LEFT END OF SPAN (ft)	DISTRIBUTION FACTORS (DF)	RATING FACTOR	SPAN	GIRDER LOCATION	DISTANCE FROM LEFT END OF SPAN (ft)	LIVELOAD FACTORS	DISTRIBUTION FACTORS (DF)	RATING FACTOR	SPAN	GIRDER LOCATION	DISTANCE FROM LEFT END OF SPAN (ft)	
DESIGN LOAD RATING		HL-93(Inv)	N/A	1	1.35	--	1.75	0.25	1.74	50′	EL	24.423	0.656	**1.35**	50′	EL	**9.769**	0.80	0.25	1.59	50′	EL	24.423	
		HL-93(Opr)	N/A	--	1.75	--	1.35	0.25	2.25	50′	EL	24.423	0.656	1.75	50′	EL	9.769	N/A	--	--	--	--	--	
		HS-20(Inv)	36.000	2	1.586	57.108	1.75	0.25	2.15	50′	EL	24.423	0.656	**1.59**	50′	EL	**9.769**	0.80	0.25	1.97	50′	EL	24.423	
		HS-20(Opr)	36.000	--	2.056	74.028	1.35	0.25	2.79	50′	EL	24.423	0.656	2.06	50′	EL	9.769	N/A	--	--	--	--	--	
LEGAL LOAD RATING	SV	SNSH	13.500	--	4.009	54.117	1.4	0.25	5.47	50′	EL	24.423	0.656	4.31	50′	EL	9.769	0.80	0.25	4.01	50′	EL	24.423	
		SNGARBS2	20.000	--	3.168	63.352	1.4	0.25	4.32	50′	EL	24.423	0.656	3.19	50′	EL	9.769	0.80	0.25	3.17	50′	EL	24.423	
		SNAGRIS2	22.000	--	3.009	66.192	1.4	0.25	4.18	50′	EL	19.538	0.656	3.01	50′	EL	9.769	0.80	0.25	3.07	50′	EL	24.423	
		SNCOTTS3	27.250	--	2	54.493	1.4	0.25	2.73	50′	EL	24.423	0.656	2.16	50′	EL	9.769	0.80	0.25	2.00	50′	EL	24.423	
		SNAGGRS4	34.925	--	1.739	60.742	1.4	0.25	2.37	50′	EL	24.423	0.656	1.88	50′	EL	9.769	0.80	0.25	1.74	50′	EL	24.423	
		SNS5A	35.550	--	1.696	60.292	1.4	0.25	2.31	50′	EL	24.423	0.656	1.96	50′	EL	9.769	0.80	0.25	1.70	50′	EL	24.423	
		SNS6A	39.950	--	1.586	63.364	1.4	0.25	2.16	50′	EL	24.423	0.656	1.82	50′	EL	9.769	0.80	0.25	1.59	50′	EL	24.423	
		SNS7B	42.000	--	1.512	63.487	1.4	0.25	2.06	50′	EL	24.423	0.656	1.85	50′	EL	9.769	0.80	0.25	1.51	50′	EL	24.423	
	TTST	TNAGRIT3	33.000	--	1.943	64.127	1.4	0.25	2.65	50′	EL	24.423	0.656	2.14	50′	EL	9.769	0.80	0.25	1.94	50′	EL	24.423	
		TNT4A	33.075	--	1.96	64.837	1.4	0.25	2.67	50′	EL	24.423	0.656	2.04	50′	EL	9.769	0.80	0.25	1.96	50′	EL	24.423	
		TNT6A	41.600	--	1.633	67.938	1.4	0.25	2.23	50′	EL	24.423	0.656	2	50′	EL	9.769	0.80	0.25	1.63	50′	EL	24.423	
		TNT7A	42.000	--	1.658	69.634	1.4	0.25	2.26	50′	EL	24.423	0.656	1.86	50′	EL	9.769	0.80	0.25	1.66	50′	EL	24.423	
		TNT7B	42.000	--	1.728	72.595	1.4	0.25	2.36	50′	EL	24.423	0.656	1.76	50′	EL	9.769	0.80	0.25	1.73	50′	EL	24.423	
		TNAGRIT4	43.000	--	1.64	70.537	1.4	0.25	2.24	50′	EL	24.423	0.656	1.69	50′	EL	9.769	0.80	0.25	1.64	50′	EL	24.423	
		TNAGT5A	45.000	--	1.532	68.95	1.4	0.25	2.09	50′	EL	24.423	0.656	1.75	50′	EL	9.769	0.80	0.25	1.53	50′	EL	24.423	
		TNAGT5B	45.000	3	1.501	67.548	1.4	0.25	2.05	50′	EL	24.423	0.656	1.6	50′	EL	9.769	0.80	0.25	**1.50**	50′	EL	**24.423**	

LOAD FACTORS:

DESIGN LOAD RATING FACTORS	LIMIT STATE	γ_{DC}	γ_{DW}
	STRENGTH I	1.25	1.50
	SERVICE III	1.00	1.00

NOTES:

MINIMUM RATING FACTORS ARE BASED ON THE STRENGTH I AND SERVICE III LIMIT STATES.

ALLOWABLE STRESSES FOR SERVICE III LIMIT STATE ARE AS REQUIRED FOR DESIGN.

(#) CONTROLLING LOAD RATING
(1) DESIGN LOAD RATING (HL-93)
(2) DESIGN LOAD RATING (HS-20)
(3) LEGAL LOAD RATING **
** SEE CHART FOR VEHICLE TYPE

GIRDER LOCATION

I - INTERIOR GIRDER
EL - EXTERIOR LEFT GIRDER
ER - EXTERIOR RIGHT GIRDER

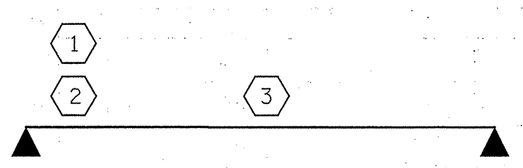

LRFR SUMMARY

PROJECT NO. 17BP.14.R.69
MACON COUNTY
STATION: 16+28.00 -L-

STATE OF NORTH CAROLINA
DEPARTMENT OF TRANSPORTATION
RALEIGH

STANDARD
LRFR SUMMARY FOR 50′ CORED SLAB UNIT 60° SKEW & 120° SKEW
(NON-INTERSTATE TRAFFIC)

REVISIONS						SHEET NO.
NO.	BY:	DATE:	NO.	BY:	DATE:	S-3
1			3			TOTAL SHEETS
2			4			13

NORTH CAROLINA PROFESSIONAL SEAL 14304 ENGINEER STEVEN A. CAMPBELL
9/13/13

Prepared in the Office of:
Mattern & Craig
CONSULTING ENGINEERS - SURVEYORS
12 BROAD STREET
ASHEVILLE, NORTH CAROLINA 28801
(828) 254-2201 - FAX (828) 254-4562

ASSEMBLED BY :	PFC	DATE :	2/13
CHECKED BY :	CMT	DATE :	2/13
DRAWN BY : CVC	6/10		
CHECKED BY : DNS	6/10		

$$$$$$SYSTIME$$$$$
$$$$$$$$$$$$$$$$$$$$DGN$$$$$$$$$$$$$$$$$$$$$$$$
$$$$USERNAME$$$$

STD. NO. 21LRFR1_60&120S_50L

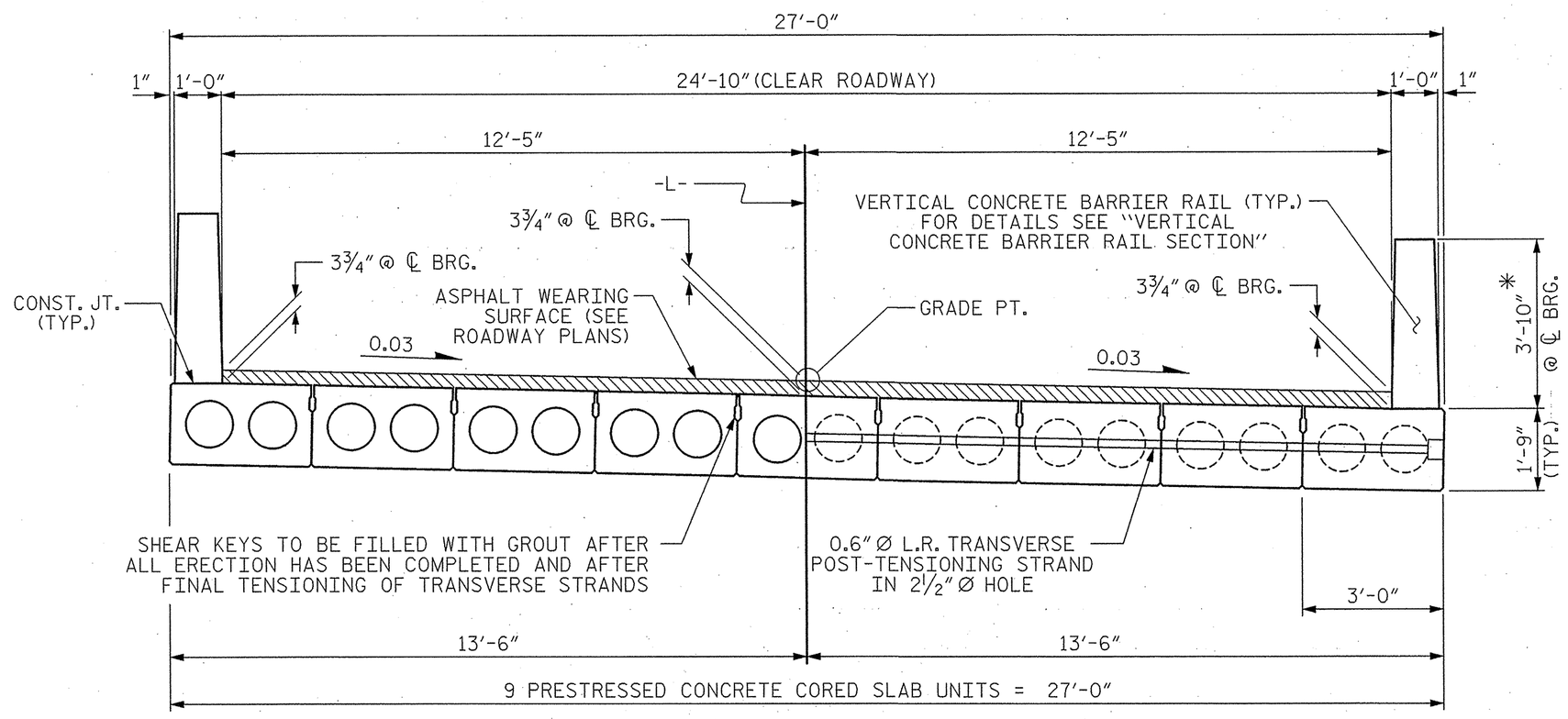

HALF SECTION
AT INTERMEDIATE DIAPHRAGMS

HALF SECTION
THROUGH VOIDS

TYPICAL SECTION

* - THE MAXIMUM BARRIER RAIL HEIGHT AND ASPHALT THICKNESS IS SHOWN. THE HEIGHT OF THE BARRIER RAIL AND ASPHALT THICKNESS VARIES WHILE THE TOP OF THE BARRIER RAIL FOLLOWS THE PROFILE OF THE GUTTERLINE. FOR RAIL HEIGHT DETAILS AND ASPHALT THICKNESS SEE THE "VERTICAL CONCRETE BARRIER RAIL SECTION" DETAIL.

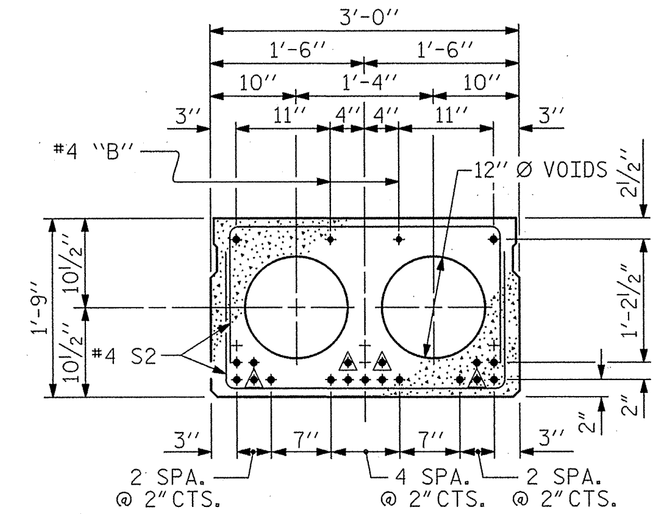

INTERIOR SLAB SECTION
(50' UNIT)
(19 STRANDS REQUIRED)

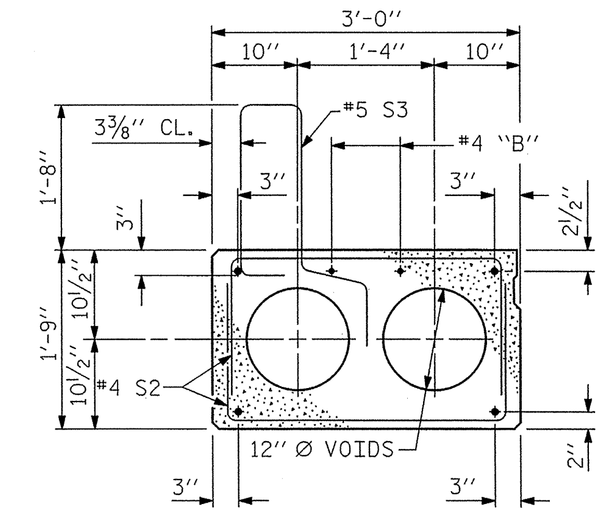

EXT. SLAB SECTION
(FOR PRESTRESSED STRAND LAYOUT, SEE INTERIOR SLAB SECTION.)

0.6" Ø LOW RELAXATION STRAND LAYOUT

BOND SHALL BE BROKEN ON THESE STRANDS FOR A DISTANCE OF 6'-0" FROM END OF CORED SLAB UNIT. SEE STANDARD SPECIFICATIONS, ARTICLE 1078-7.

DEBONDING LEGEND

FIXED END

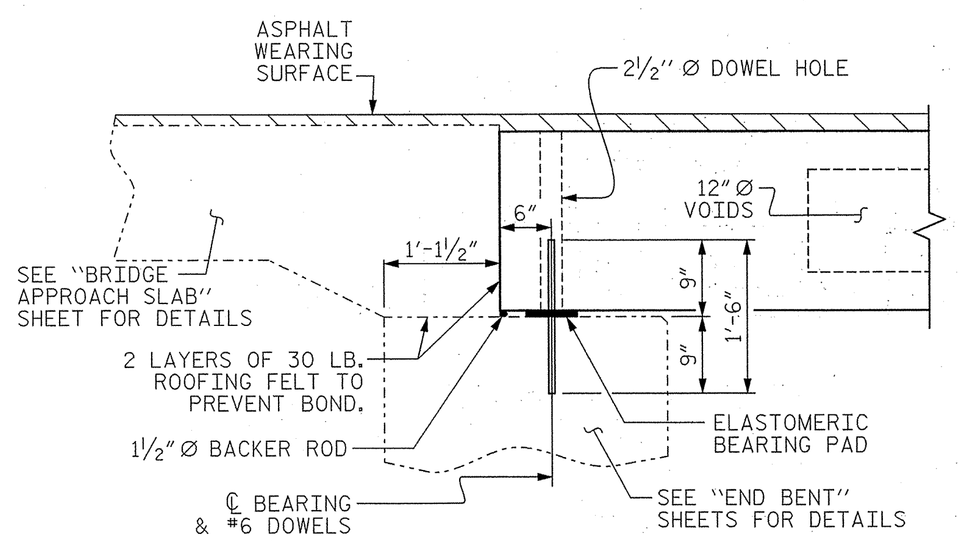

SECTION AT END BENT

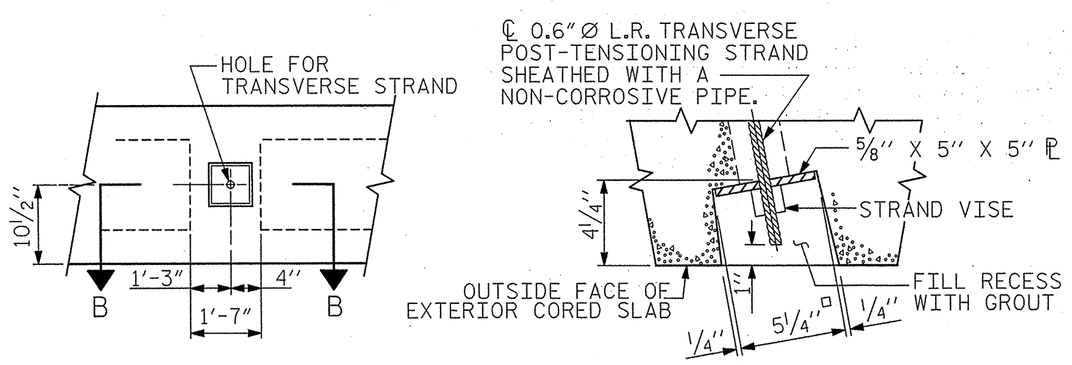

ELEVATION VIEW

SECTION B-B

GROUTED RECESS AT END OF POST-TENSIONED STRAND OF CORED SLABS

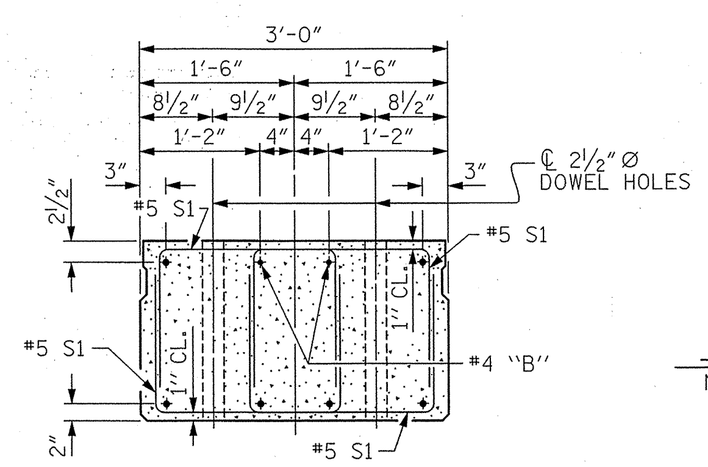

END ELEVATION

SHOWING PLACEMENT OF DOUBLE STIRRUPS AND LOCATION OF DOWEL HOLES. (STRAND LAYOUT NOT SHOWN.) INTERIOR SLAB UNIT SHOWN-EXTERIOR SLAB UNIT SIMILAR EXCEPT SHEAR KEY LOCATION.

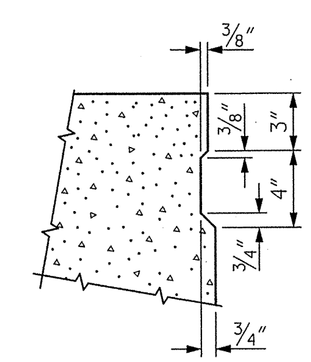

SHEAR KEY DETAIL

NOTE: OMIT SHEAR KEY ON OUTSIDE FACE OF EXTERIOR CORED SLABS.

PROJECT NO. 17BP.14.R.69
MACON COUNTY
STATION: 16+28.00 -L-

SHEET 1 OF 3

STATE OF NORTH CAROLINA
DEPARTMENT OF TRANSPORTATION
RALEIGH

STANDARD
3'-0" X 1'-9"
PRESTRESSED CONCRETE CORED SLAB UNIT
60° SKEW

ASSEMBLED BY :	PFC	DATE :	2/13		
CHECKED BY :	CMT	DATE :	2/13		
DRAWN BY : DGE	5/09	REV. 12/11	MAA/AAC		
CHECKED BY : BCH	6/09				

Prepared in the Office of: Mattern & Craig
CONSULTING ENGINEERS - SURVEYORS
12 BROAD STREET
ASHEVILLE, NORTH CAROLINA 28801
(828) 254-2201 - FAX (828) 254-4562

NORTH CAROLINA PROFESSIONAL SEAL 14709 ENGINEER STEVEN A. CAMPBELL
6/21/13

REVISIONS						SHEET NO.
NO.	BY:	DATE:	NO.	BY:	DATE:	S-4
1			3			TOTAL SHEETS
2			4			13

STD. NO. 21" PCS2_27_60S

$$$$$$SYSTIME$$$$$
$$$$$$$$$$$$$$$$$$$$$$DGN$$$$$$$$$$$$$$$$$$$$$$$$
$$$$USERNAME$$$$

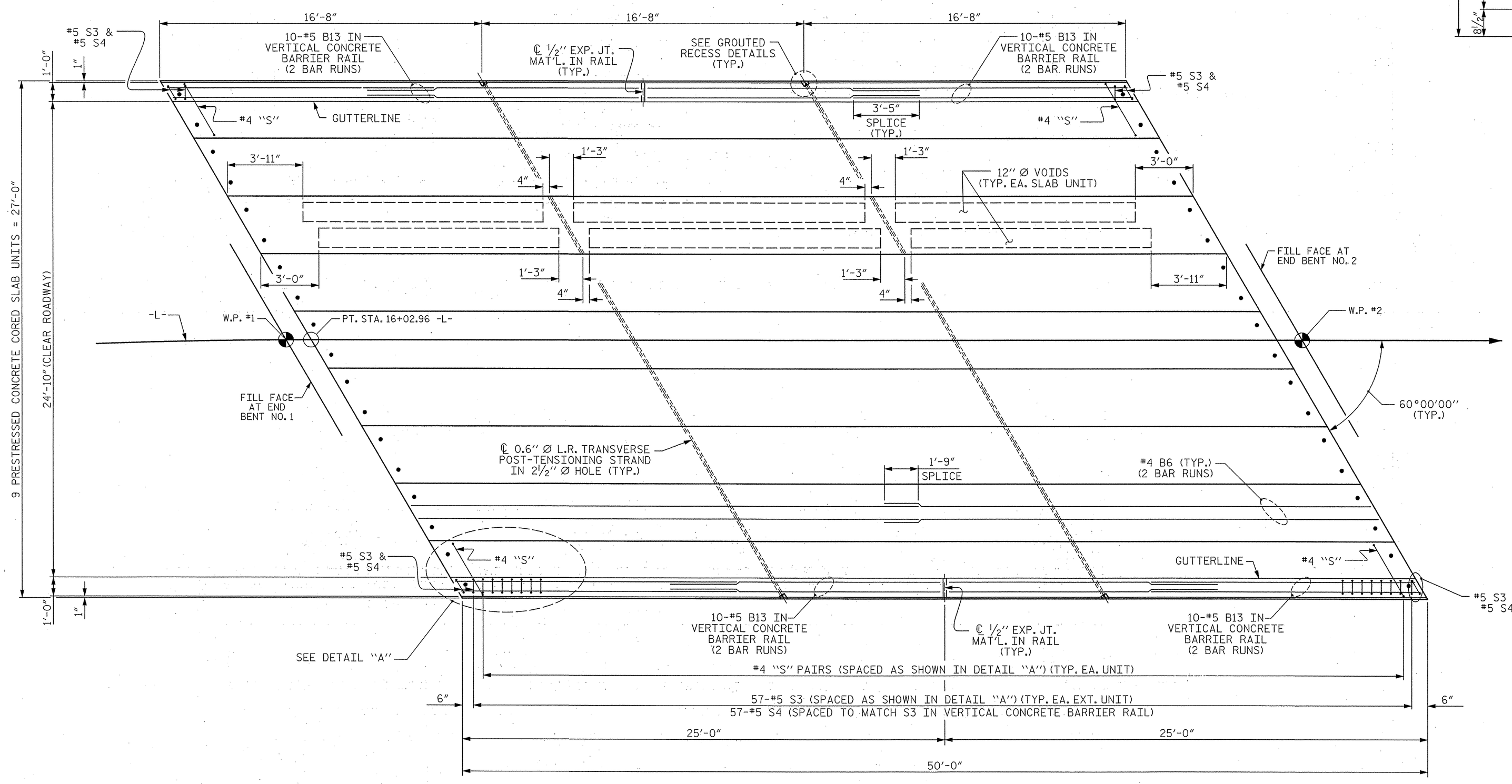

PLAN OF UNIT

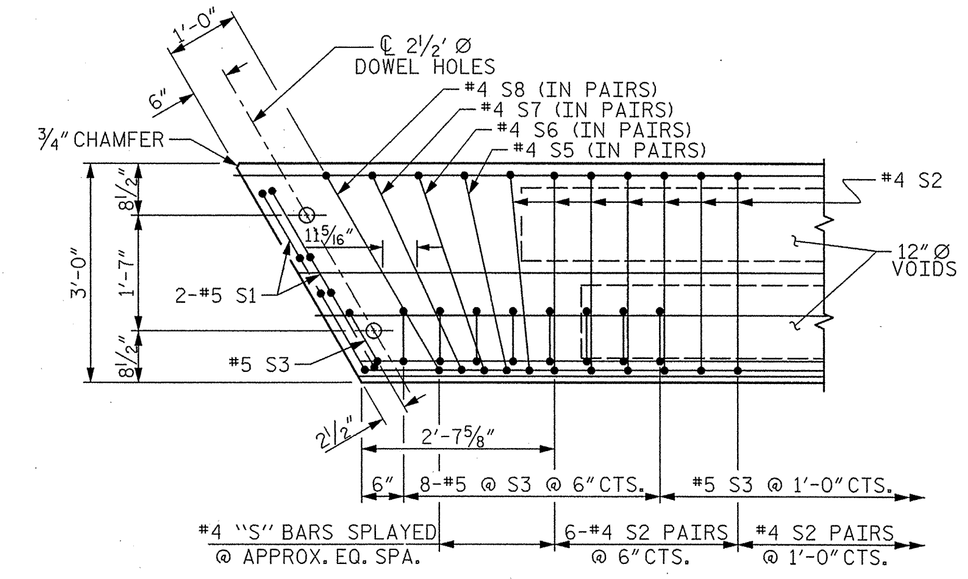

DETAIL "A"

NOTE: EXTERIOR UNIT SHOWN - INTERIOR UNIT SIMILAR EXCEPT OMIT #5 S3 BARS.

PROJECT NO. 17BP.14.R.69

MACON COUNTY

STATION: 16+28.00 -L-

SHEET 2 OF 3

STATE OF NORTH CAROLINA
DEPARTMENT OF TRANSPORTATION
RALEIGH

PLAN OF 50' UNIT
24'-10" CLEAR ROADWAY
60° SKEW

ASSEMBLED BY : PFC	DATE : 2/13		
CHECKED BY : CMT	DATE : 2/13		
DRAWN BY : DGE 5/09	REV. 12/5/11 MAA/AAC		
CHECKED BY : BCH 6/09			

Prepared in the Office of: Mattern & Craig
CONSULTING ENGINEERS - SURVEYORS
12 BROAD STREET
ASHEVILLE, NORTH CAROLINA 28801
(828) 254-2001 - FAX (828) 254-4562

NORTH CAROLINA PROFESSIONAL SEAL 14309 ENGINEER STEVEN A. CAMPBELL

REVISIONS						SHEET NO.
NO.	BY:	DATE:	NO.	BY:	DATE:	S-5
1			3			TOTAL SHEETS
2			4			13

STD. NO. 21" PCS_27_60S_50L

$$$$$$SYSTIME$$$$$
$$$$$$$$$$$$$$$$$$$$$$DGN$$$$$$$$$$$$$$$$$$$$$$
$$$$USERNAME$$$$

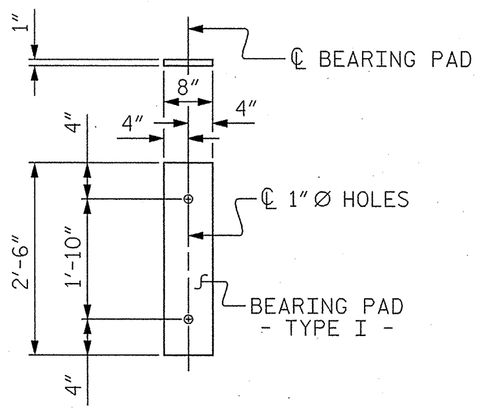

FIXED END
(TYPE I - 18 REQ'D)

ELASTOMERIC BEARING DETAILS

ELASTOMER IN ALL BEARINGS SHALL BE 50 DUROMETER HARDNESS.

CORED SLABS REQUIRED			
	NUMBER	LENGTH	TOTAL LENGTH
50' UNIT			
EXTERIOR C.S.	2	50'-0"	100'-0"
INTERIOR C.S.	7	50'-0"	350'-0"
TOTAL	9		450'-0"

DEAD LOAD DEFLECTION AND CAMBER	
	3'-0" x 1'-9"
50' CORED SLAB UNIT	0.6"Ø L.R. STRAND
CAMBER (SLAB ALONE IN PLACE)	2½" ↑
DEFLECTION DUE TO SUPERIMPOSED DEAD LOAD**	¼" ↓
FINAL CAMBER	2¼" ↑

** INCLUDES FUTURE WEARING SURFACE

BAR TYPES

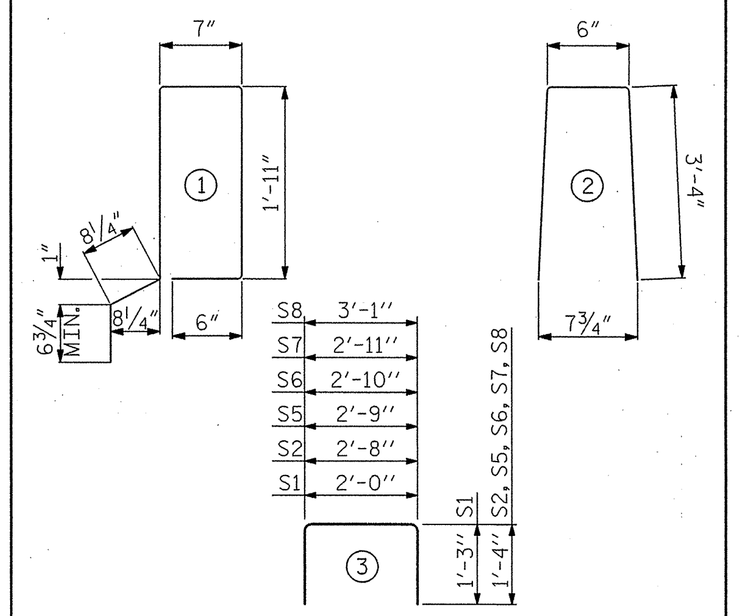

ALL BAR DIMENSIONS ARE OUT TO OUT

NOTES

ALL PRESTRESSING STRANDS SHALL BE 7-WIRE LOW RELAXATION GRADE 270 STRANDS AND SHALL CONFORM TO AASHTO M203 EXCEPT FOR SAMPLING REQUIREMENTS WHICH SHALL BE IN ACCORDANCE WITH THE STANDARD SPECIFICATIONS.

ALL REINFORCING STEEL CAST WITH THE CORED SLAB SECTIONS SHALL BE GRADE 60 AND SHALL BE INCLUDED IN THE UNIT PRICE BID FOR PRESTRESSED CONCRETE CORED SLABS.

RECESSES FOR TRANSVERSE STRANDS SHALL BE GROUTED AFTER THE TENSIONING OF THE STRANDS.

THE 2½"Ø DOWEL HOLES AT FIXED ENDS OF SLAB SECTIONS SHALL BE FILLED WITH NON-SHRINK GROUT.

THE BACKER RODS SHALL CONFORM TO THE REQUIREMENTS OF TYPE M BOND BREAKER. SEE SECTION 1028 OF THE STANDARD SPECIFICATIONS.

WHEN CORED SLABS ARE CAST, AN INTERNAL HOLD-DOWN SYSTEM SHALL BE EMPLOYED TO PREVENT VOIDS FROM RISING OR MOVING SIDEWAYS. AT LEAST SIX WEEKS PRIOR TO CASTING CORED SLABS, THE CONTRACTOR SHALL SUBMIT TO THE ENGINEER FOR REVIEW AND COMMENT, DETAILED DRAWINGS OF THE PROPOSED HOLD-DOWN SYSTEM. IN ADDITION TO STRUCTURAL DETAILS, LOCATION AND SPACING OF THE HOLD-DOWNS SHALL BE INDICATED.

ALL REINFORCING STEEL IN THE VERTICAL CONCRETE BARRIER RAIL SHALL BE EPOXY COATED.

PRESTRESSING STRANDS SHALL BE CUT FLUSH WITH THE CORED SLAB UNIT ENDS.

APPLY EPOXY PROTECTIVE COATING TO CORED SLAB UNIT ENDS.

GROOVED CONTRACTION JOINTS, ½" IN DEPTH, SHALL BE TOOLED IN ALL EXPOSED FACES OF THE BARRIER RAIL AND IN ACCORDANCE WITH ARTICLE 825-10(B) OF THE STANDARD SPECIFICATIONS. A CONTRACTION JOINT SHALL BE LOCATED AT EACH THIRD POINT BETWEEN BARRIER RAIL EXPANSION JOINTS. ONLY ONE CONTRACTION JOINT IS REQUIRED AT MIDPOINT OF BARRIER RAIL SEGMENTS LESS THAN 20 FEET IN LENGTH AND NO CONTRACTION JOINTS ARE REQUIRED FOR THOSE SEGMENTS LESS THAN 10 FEET IN LENGTH.

TRANSVERSE POST TENSIONING OF THE CORED SLAB UNITS SHALL BE DONE IN ACCORDANCE WITH THE STANDARD SPECIFICATIONS.

THE TRANSFER OF LOAD FROM THE ANCHORAGES TO THE CORED SLAB UNIT SHALL BE DONE WHEN THE CONCRETE HAS REACHED A COMPRESSIVE STRENGTH OF NOT LESS THAN THE REQUIRED STRENGTH SHOWN IN THE "CONCRETE RELEASE STRENGTH" TABLE.

FOR GROUT FOR STRUCTURES, SEE SPECIAL PROVISIONS.

BILL OF MATERIAL FOR VERTICAL CONCRETE BARRIER RAIL						
BAR	BARS PER PAIR OF EXTERIOR UNITS	TOTAL NO.	SIZE	TYPE	LENGTH	WEIGHT
	50' UNIT					
*B13	80	80	#5	STR	14'-3"	1189
* S4	118	118	#5	2	7'-2"	882
* EPOXY COATED REINFORCING STEEL				LBS.		2071
CLASS AA CONCRETE				CU.YDS.		13.1
TOTAL VERTICAL CONCRETE BARRIER RAIL				LN. FT.		100.29

GUTTERLINE ASPHALT THICKNESS & RAIL HEIGHT		
24'-10" CLEAR ROADWAY	ASPHALT OVERLAY THICKNESS	RAIL HEIGHT
	@ MID-SPAN	@ MID-SPAN
	SUPERED SECTION	
50' UNITS	1½"	3'-7¾"

CONCRETE RELEASE STRENGTH	
UNIT	PSI
50'	4900

BILL OF MATERIAL FOR ONE 50' CORED SLAB UNIT							
				EXTERIOR UNIT		INTERIOR UNIT	
BAR	NUMBER	SIZE	TYPE	LENGTH	WEIGHT	LENGTH	WEIGHT
B6	4	#4	STR	25'-8"	69	25'-8"	69
S1	8	#5	3	4'-6"	38	4'-6"	38
S2	102	#4	3	5'-4"	363	5'-4"	363
* S3	59	#5	1	6'-2"	379		
S5	4	#4	3	5'-5"	14	5'-5"	14
S6	4	#4	3	5'-6"	15	5'-6"	15
S7	4	#4	3	5'-7"	15	5'-7"	15
S8	4	#4	3	5'-9"	15	5'-9"	15
REINFORCING STEEL			LBS.		529		529
* EPOXY COATED REINFORCING STEEL			LBS.		379		
6500 P.S.I. CONCRETE			CU. YDS.		7.3		7.3
0.6"Ø L.R. STRANDS			No.		19		19

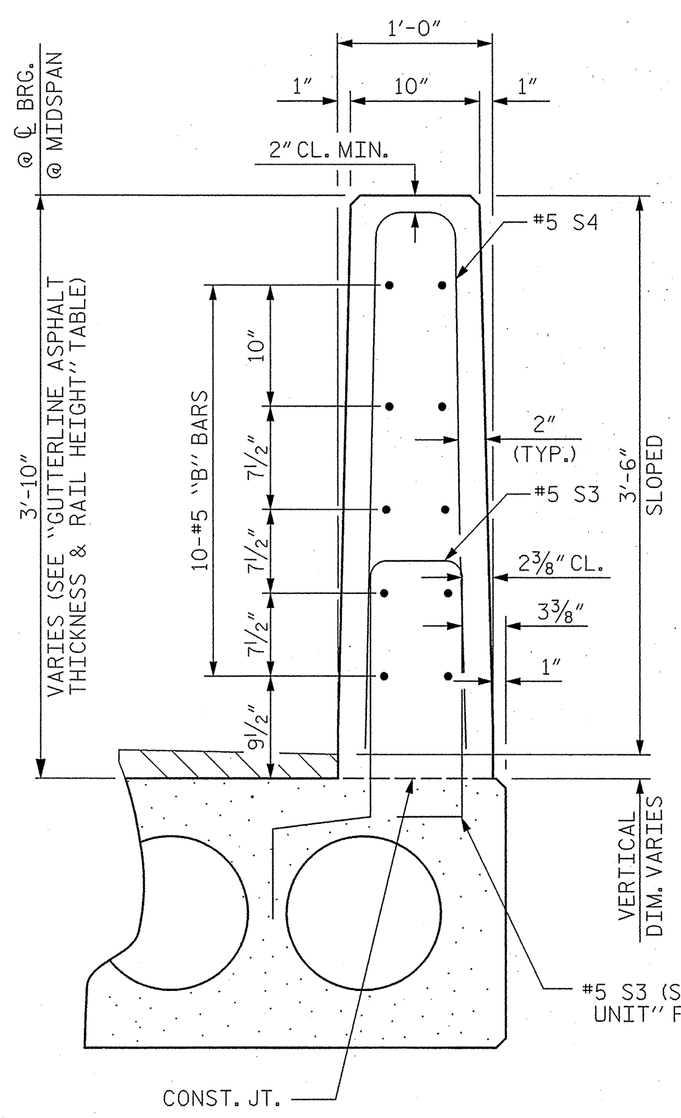

VERTICAL CONCRETE BARRIER RAIL SECTION

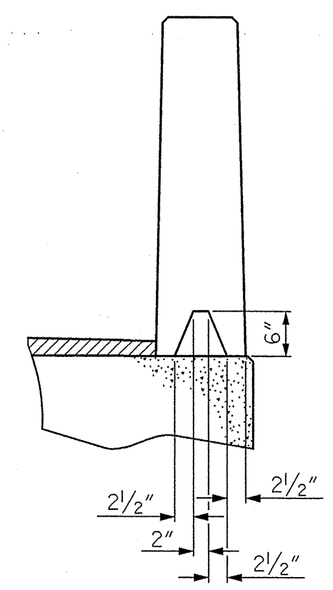

SECTION S-S
AT DAM IN OPEN JOINT
(THIS IS TO BE USED ONLY WHEN SLIP FORM IS USED)

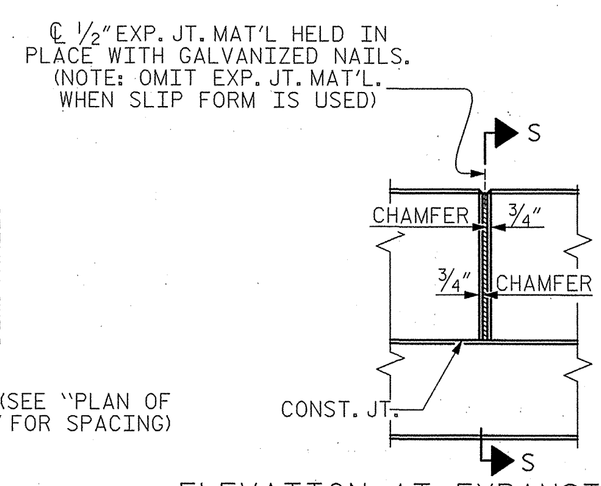

ELEVATION AT EXPANSION JOINTS

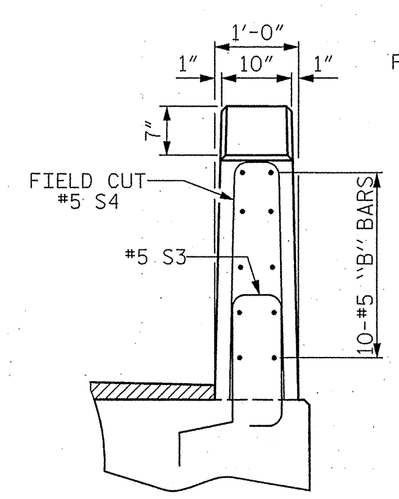

END VIEW

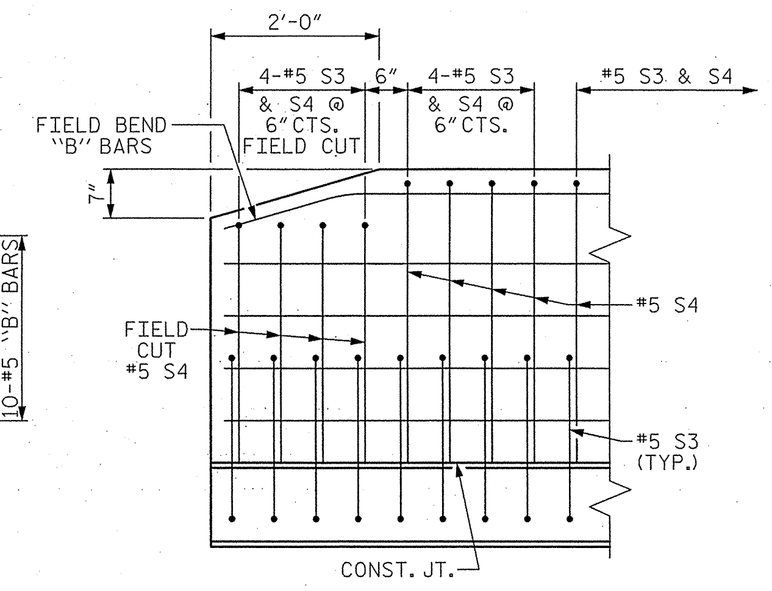

SIDE VIEW

END OF RAIL DETAILS

GRADE 270 STRANDS	
	0.6"Ø L.R.
AREA (SQUARE INCHES)	0.217
ULTIMATE STRENGTH (LBS. PER STRAND)	58,600
APPLIED PRESTRESS (LBS. PER STRAND)	43,950

PROJECT NO. 17BP.14.R.69
MACON COUNTY
STATION: 16+28.00 -L-

SHEET 3 OF 3

STATE OF NORTH CAROLINA
DEPARTMENT OF TRANSPORTATION
RALEIGH

STANDARD
3'-0" X 1'-9"
PRESTRESSED CONCRETE
CORED SLAB UNIT
60° SKEW

ASSEMBLED BY :	PFC	DATE :	2/13
CHECKED BY :	CMT	DATE :	2/13
DRAWN BY : DGE	5/09	REV. 12/11	MAA/AAC
CHECKED BY : BCH	6/09		

Prepared in the Office of:
Mattern & Craig
CONSULTING ENGINEERS - SURVEYORS
12 BROAD STREET
ASHEVILLE, NORTH CAROLINA 28801
(828) 254-2201 - FAX (828) 254-4562

NORTH CAROLINA PROFESSIONAL SEAL 14303 ENGINEER STEVEN A. CAMPBELL
6/14/13

REVISIONS					
NO.	BY:	DATE:	NO.	BY:	DATE:
1			3		
2			4		

SHEET NO. S-6
TOTAL SHEETS 13

STD. NO. 21" PCS3_27_60S

$$$$$$SYSTIME$$$$$
$$$$$$$$$$$$$$$$$$$$$$$$DGN$$$$$$$$$$$$$$$$$$$$$$$$
$$$$USERNAME$$$$

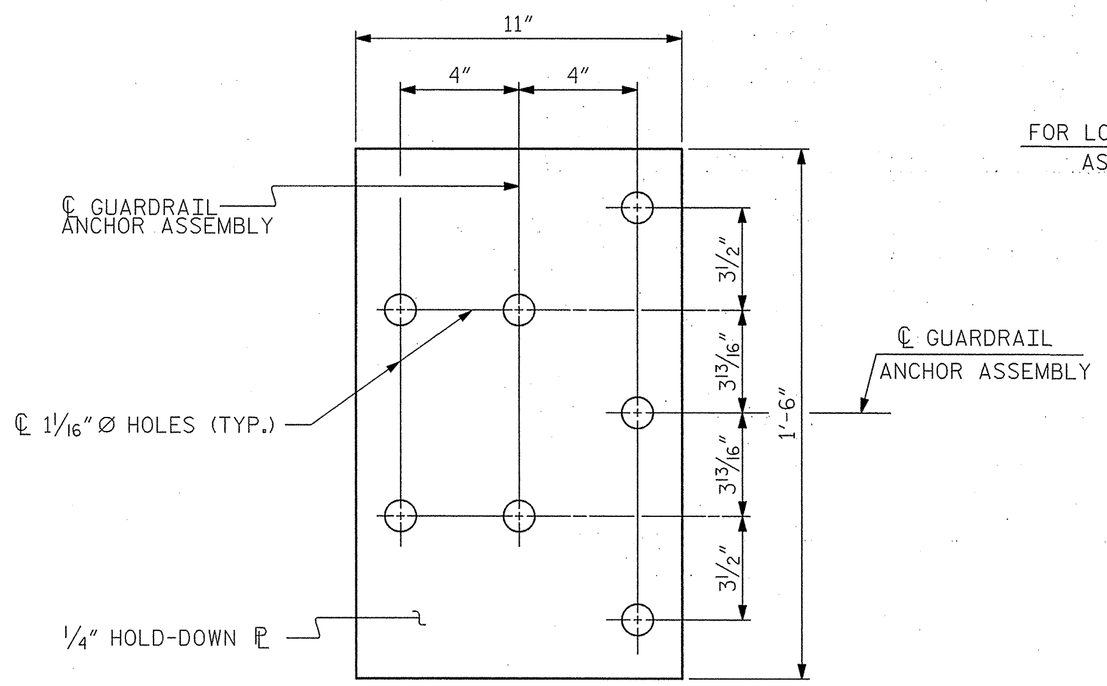

PLAN

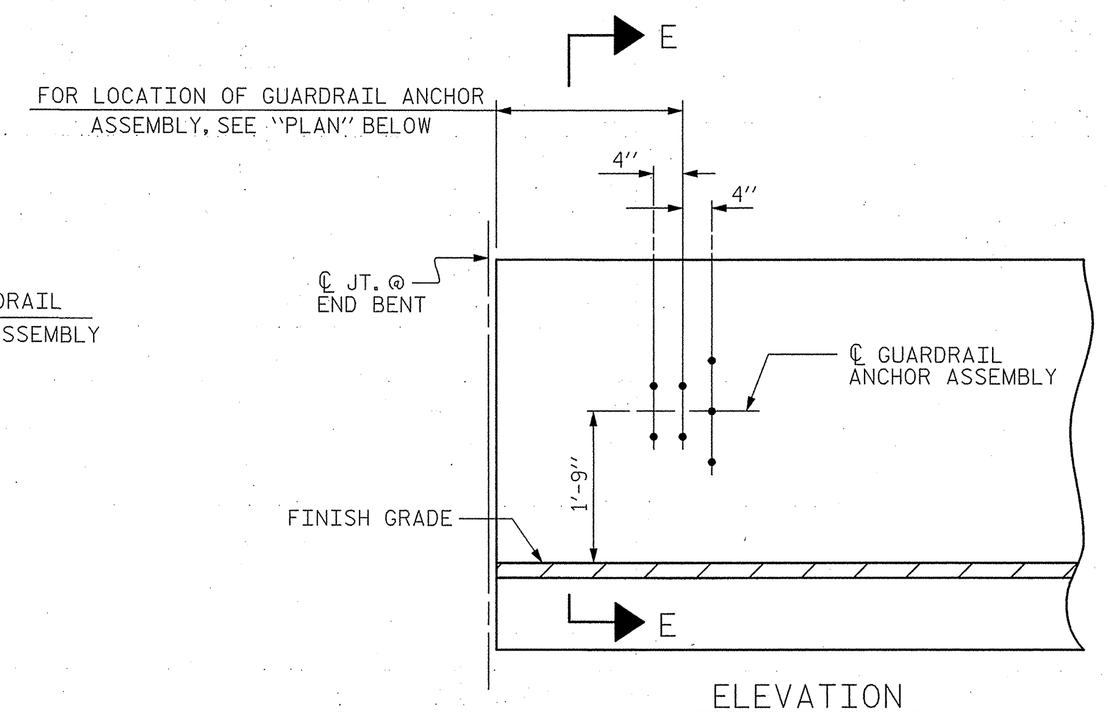

ELEVATION

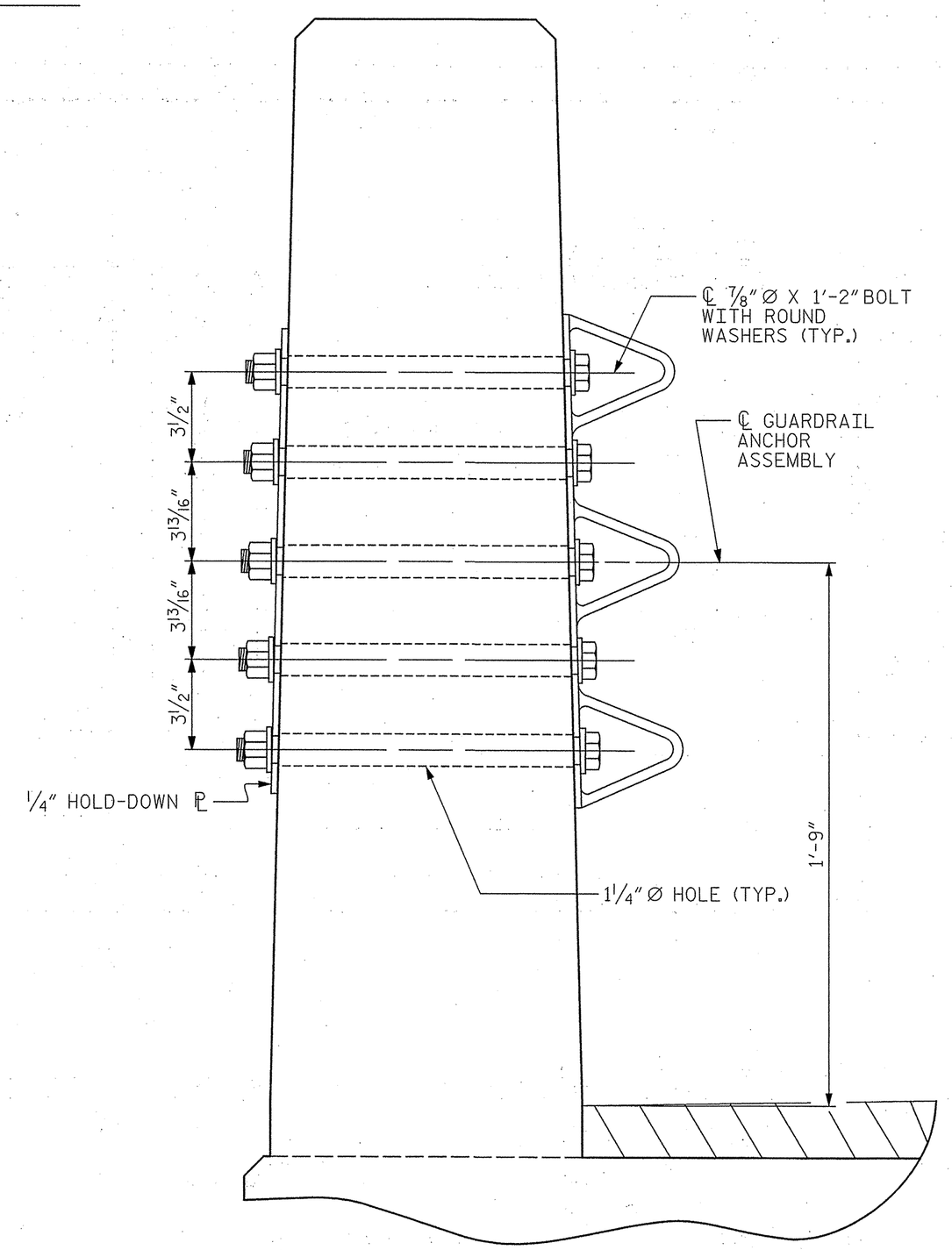

SECTION E-E

GUARDRAIL ANCHOR ASSEMBLY DETAILS

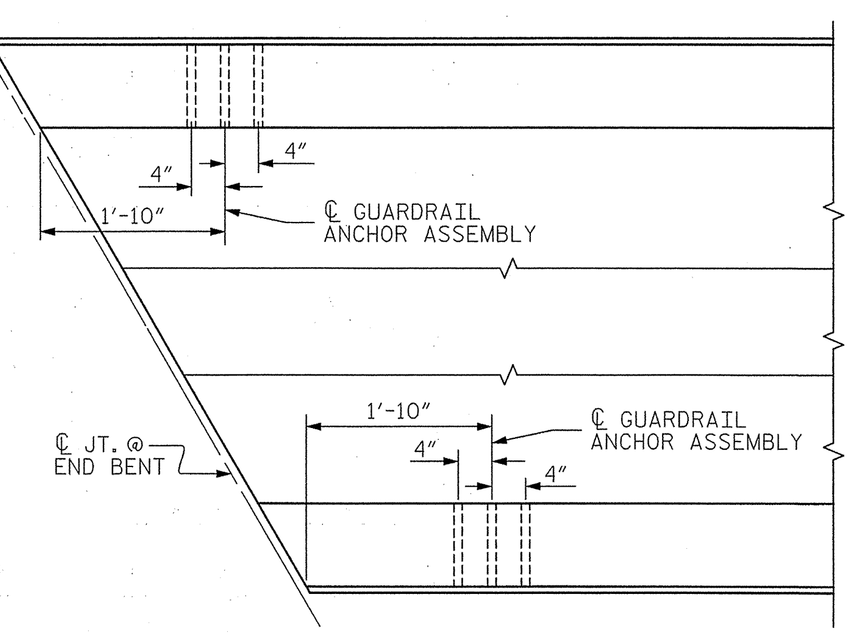

PLAN

LOCATION OF ANCHORS FOR GUARDRAIL

END BENT #1 SHOWN, END BENT #2 SIMILAR.

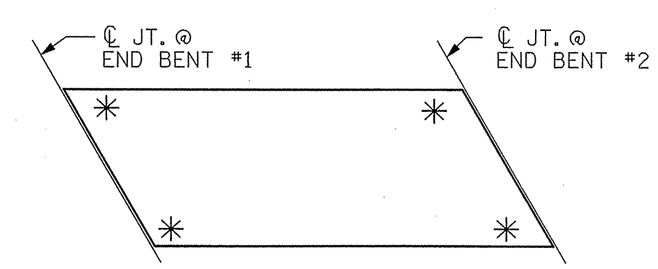

SKETCH SHOWING POINTS OF ATTACHMENT

✳ DENOTES GUARDRAIL ANCHOR ASSEMBLY

NOTES

THE GUARDRAIL ANCHOR ASSEMBLY SHALL CONSIST OF A 1/4" HOLD DOWN PLATE AND 7 - 7/8" Ø BOLTS WITH NUTS AND WASHERS.

THE HOLD-DOWN PLATE SHALL CONFORM TO AASHTO M270 GRADE 36. AFTER FABRICATION, THE HOLD-DOWN PLATE SHALL BE HOT-DIP GALVANIZED IN ACCORDANCE WITH AASHTO M111.

BOLTS SHALL CONFORM TO THE REQUIREMENTS OF ASTM A307 AND NUTS SHALL CONFORM TO THE REQUIREMENTS OF AASHTO M291. BOLTS, NUTS AND WASHERS SHALL BE GALVANIZED. (AT THE CONTRACTOR'S OPTION, STAINLESS STEEL BOLTS, NUTS AND WASHERS MAY BE USED AS AN ALTERNATE FOR THE 7/8" Ø GALVANIZED BOLTS, NUTS AND WASHERS. THEY SHALL CONFORM TO OR EXCEED THE MECHANICAL REQUIREMENTS OF ASTM A307. THE USE OF THIS ALTERNATE SHALL BE APPROVED BY THE ENGINEER.)

THE GUARDRAIL ANCHOR ASSEMBLY IS REQUIRED AT ALL POINTS WHERE APPROACH GUARDRAIL IS TO BE ATTACHED TO THE END OF BARRIER RAIL. FOR POINTS OF ATTACHMENT, SEE SKETCH.

AFTER INSTALLATION, THE EXPOSED THREAD OF THE BOLT SHALL BE BURRED WITH A SHARP POINTED TOOL.

THE COST OF THE GUARDRAIL ANCHOR ASSEMBLY SHALL BE INCLUDED IN THE UNIT CONTRACT PRICE BID FOR VERTICAL CONCRETE BARRIER RAIL.

THE VERTICAL REINFORCING BARS MAY BE SHIFTED SLIGHTLY IN THE VERTICAL CONCRETE BARRIER RAIL TO CLEAR ASSEMBLY BOLTS.

THE 1 1/4" Ø HOLES SHALL BE FORMED OR DRILLED WITH A CORE BIT. IMPACT TOOLS WILL NOT BE PERMITTED. ANY CONCRETE DAMAGED BY THIS WORK SHALL BE REPAIRED TO THE SATISFACTION OF THE ENGINEER.

PROJECT NO. 17BP.14.R.69
MACON COUNTY
STATION: 16+28.00 -L-

STATE OF NORTH CAROLINA
DEPARTMENT OF TRANSPORTATION
RALEIGH

STANDARD
GUARDRAIL ANCHORAGE FOR VERTICAL CONCRETE BARRIER RAIL

ASSEMBLED BY : PFC	DATE : 2/13		
CHECKED BY : CMT	DATE : 2/13		
DRAWN BY : MAA 5/10	ADDED 5/6/10		
CHECKED BY : GM 5/10	REV. 10/1/11	MAA/GM	
	REV. 12/5/11	MAA/GM	

Prepared in the Office of: Mattern & Craig
CONSULTING ENGINEERS - SURVEYORS
12 BROAD STREET
ASHEVILLE, NORTH CAROLINA 28801
(828) 254-2201 - FAX (828) 254-4562

NORTH CAROLINA PROFESSIONAL SEAL 14209 ENGINEER STEVEN A. CAMPBELL

REVISIONS						SHEET NO.
NO.	BY:	DATE:	NO.	BY:	DATE:	S-7
1			3			TOTAL SHEETS
2			4			13

$$$$$$$SYSTIME$$$$$
$$$$$$$$$$$$$$$$$$$$$$$$DGN$$$$$$$$$$$$$$$$$$$$$$$$
$$$$USERNAME$$$$

(SHT 3) STD. NO. GRA3

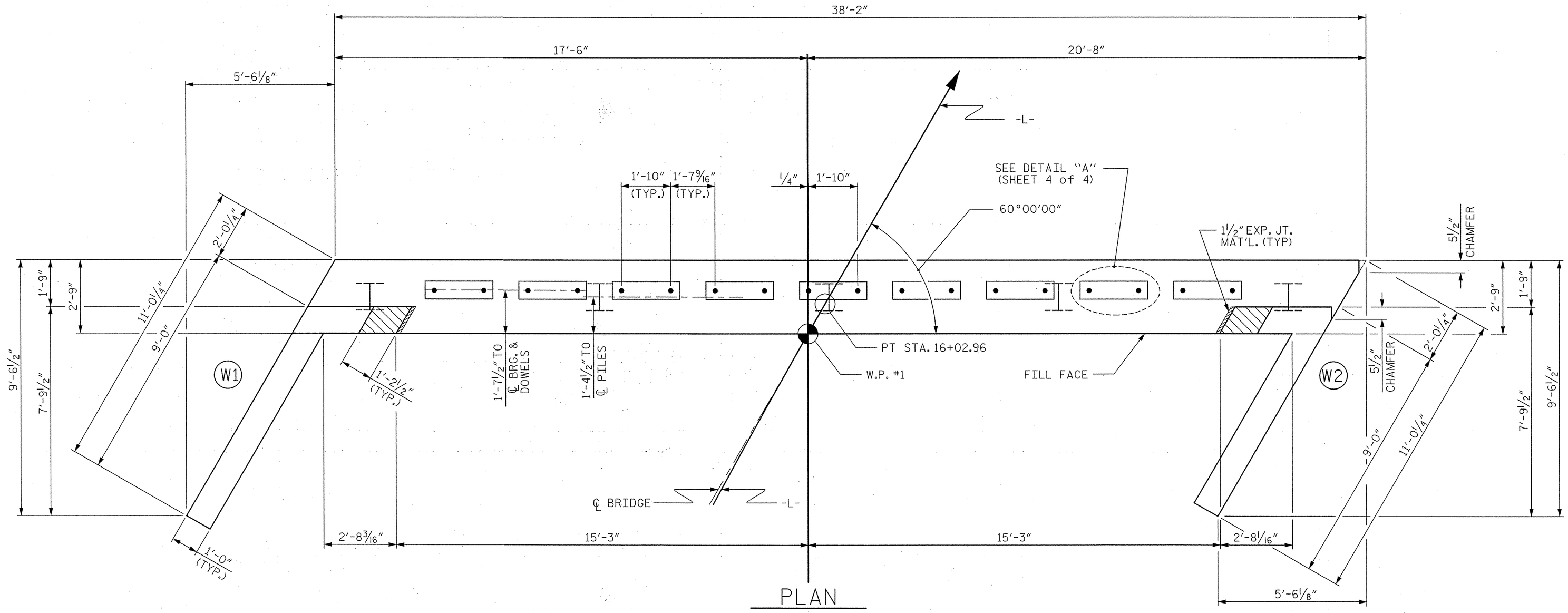

PLAN

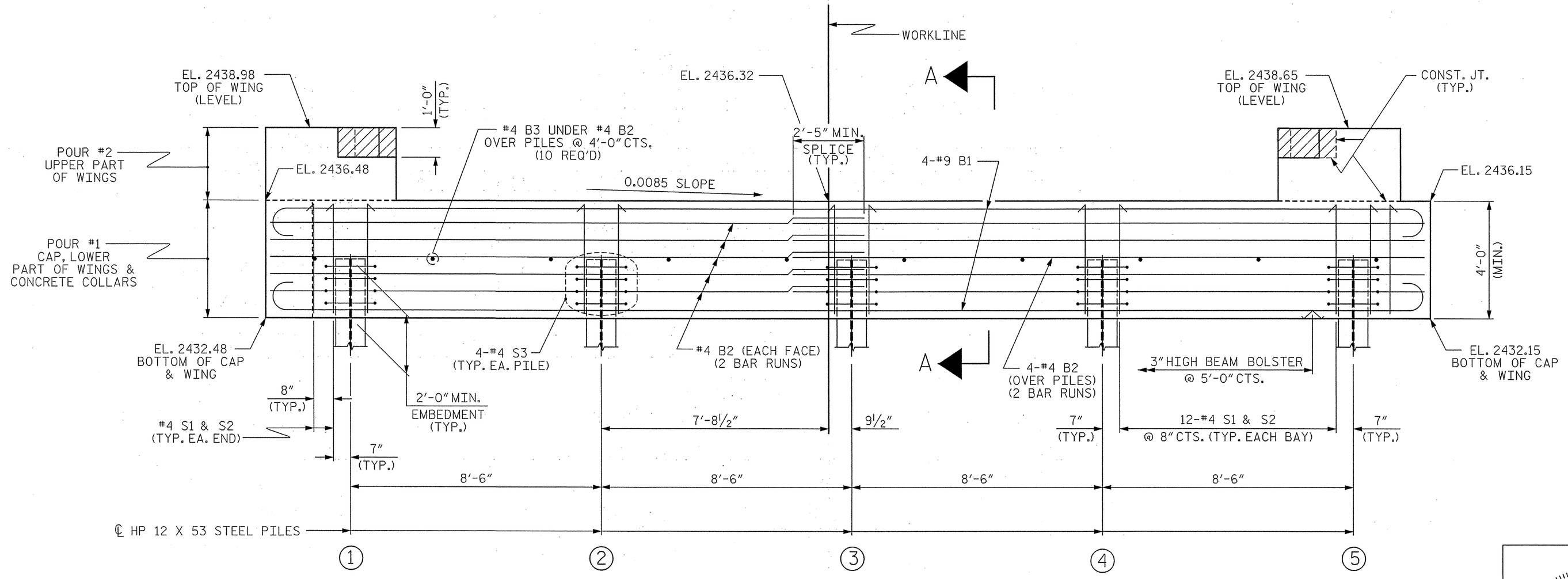

ELEVATION

WINGS NOT SHOWN FOR CLARITY.
FOR SECTION A-A, SEE SHEET 4 of 4.
CONCRETE COLLARS FOR STEEL PILES NOT SHOWN IN PLAN AND ELEVATION VIEWS FOR CLARITY.
SEE "CORROSION PROTECTION FOR STEEL PILES DETAIL", SHEET 4 of 4.

NOTES

STIRRUPS IN CAP MAY BE SHIFTED AS NECESSARY TO CLEAR DOWELS.

THE CONCRETE IN THE SHADED AREA OF THE WING SHALL BE POURED AFTER THE VERTICAL CONCRETE BARRIER RAIL IS CAST IF SLIP FORMING IS USED.

FOR PILE SPLICE DETAILS, SEE SHEET 4 of 4.

FOR WING DETAILS, SEE SHEET 3 of 4.

TOP OF PILE ELEVATIONS	
1	2434.46
2	2434.39
3	2434.31
4	2434.24
5	2434.17

PROJECT NO. 17BP.14.R.69
MACON COUNTY
STATION: 16+28.00 -L-

SHEET 1 OF 4

STATE OF NORTH CAROLINA
DEPARTMENT OF TRANSPORTATION
RALEIGH

SUBSTRUCTURE

END BENT No. 1

ASSEMBLED BY : PFC	DATE : 2/13
CHECKED BY : CMT	DATE : 2/13
DRAWN BY : DGE 01/10	
CHECKED BY : MKT 01/10	

Prepared in the Office of: Mattern & Craig
CONSULTING ENGINEERS - SURVEYORS
12 BROAD STREET
ASHEVILLE, NORTH CAROLINA 28801
(828) 254-2201 - FAX (828) 254-4562

NORTH CAROLINA PROFESSIONAL SEAL 14300 ENGINEER STEVEN A. CAMPBELL

REVISIONS						SHEET NO.
NO.	BY:	DATE:	NO.	BY:	DATE:	S-8
1			3			TOTAL SHEETS
2			4			13

$$$$$$$SYSTIME$$$$$
$$$$$$$$$$$$$$$$$$$$$$DGN$$$$$$$$$$$$$$$$$$$$$$
$$$$USERNAME$$$$

STD. NO. EB_27_60S4

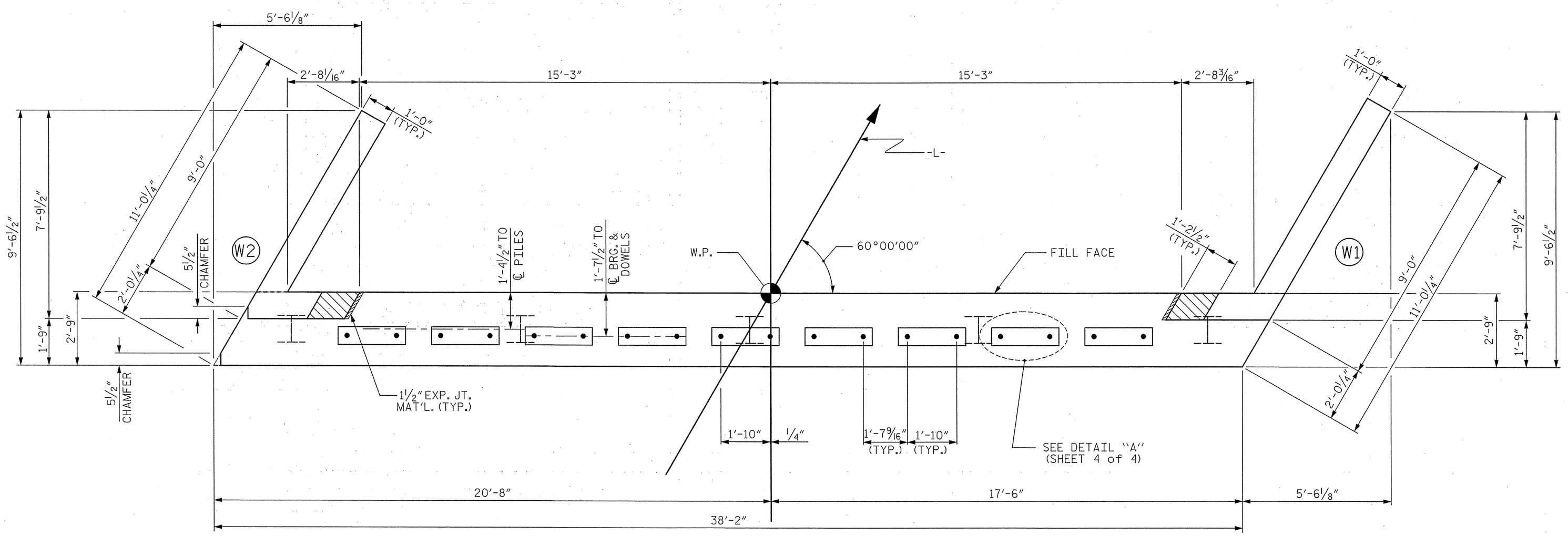

PLAN

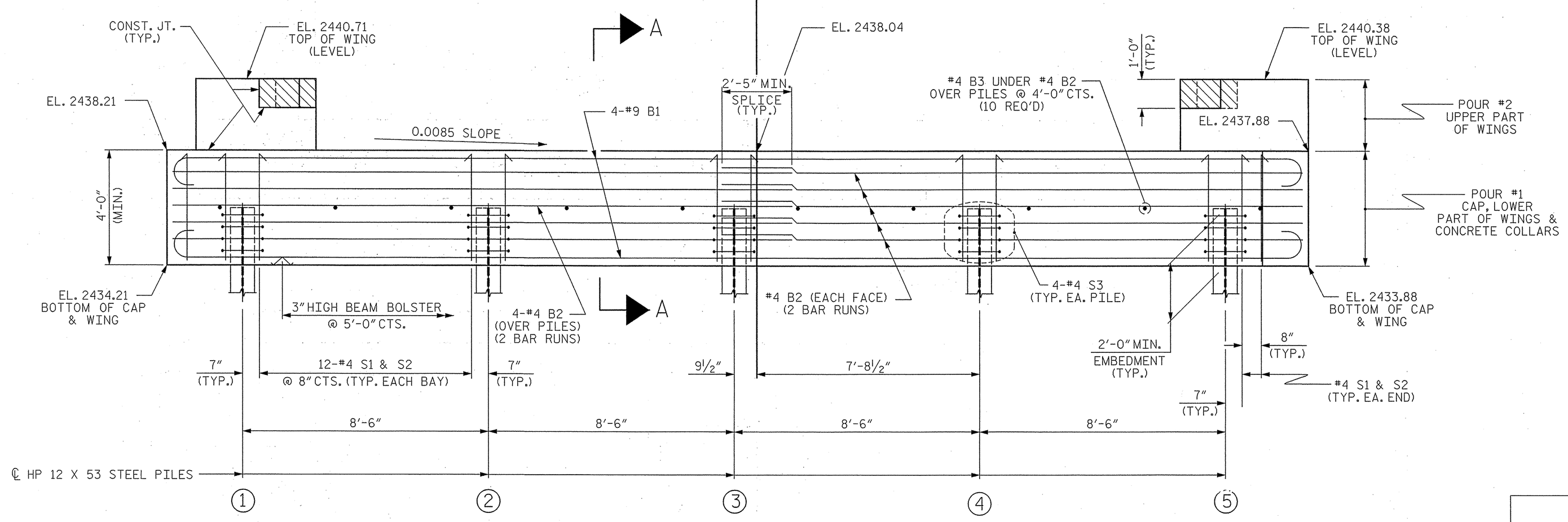

ELEVATION

WINGS NOT SHOWN FOR CLARITY.
FOR SECTION A-A, SEE SHEET 4 of 4.
CONCRETE COLLARS FOR STEEL PILES NOT SHOWN IN PLAN AND ELEVATION VIEWS FOR CLARITY.
SEE "CORROSION PROTECTION FOR STEEL PILES DETAIL", SHEET 4 of 4.

NOTES

STIRRUPS IN CAP MAY BE SHIFTED AS NECESSARY TO CLEAR DOWELS.

THE CONCRETE IN THE SHADED AREA OF THE WING SHALL BE POURED AFTER THE VERTICAL CONCRETE BARRIER RAIL IS CAST IF SLIP FORMING IS USED.

FOR PILE SPLICE DETAILS, SEE SHEET 4 of 4.

FOR WING DETAILS, SEE SHEET 3 of 4.

TOP OF PILE ELEVATIONS	
1	2436.19
2	2436.12
3	2436.05
4	2435.98
5	2435.90

PROJECT NO. 17BP.14.R.69
MACON COUNTY
STATION: 16+28.00 -L-

SHEET 2 OF 4

STATE OF NORTH CAROLINA
DEPARTMENT OF TRANSPORTATION
RALEIGH

SUBSTRUCTURE

END BENT No. 2

ASSEMBLED BY : PFC DATE : 2/13
CHECKED BY : CMT DATE : 2/13
DRAWN BY : DGE 01/10
CHECKED BY : MKT 01/10

Prepared in the Office of: Mattern & Craig
CONSULTING ENGINEERS - SURVEYORS
12 BROAD STREET
ASHEVILLE, NORTH CAROLINA 28801
(828) 254-2201 - FAX (828) 254-4562

NORTH CAROLINA PROFESSIONAL SEAL 14309 ENGINEER STEVEN A. CAMPBELL

REVISIONS						SHEET NO.
NO.	BY:	DATE:	NO.	BY:	DATE:	S-9
1			3			TOTAL SHEETS
2			4			13

$$$$$$SYSTIME$$$$$
$$$$$$$$$$$$$$$$$$$$$$$$DGN$$$$$$$$$$$$$$$$$$$$$$$$
$$$$USERNAME$$$$

STD. NO. EB_27_60S4

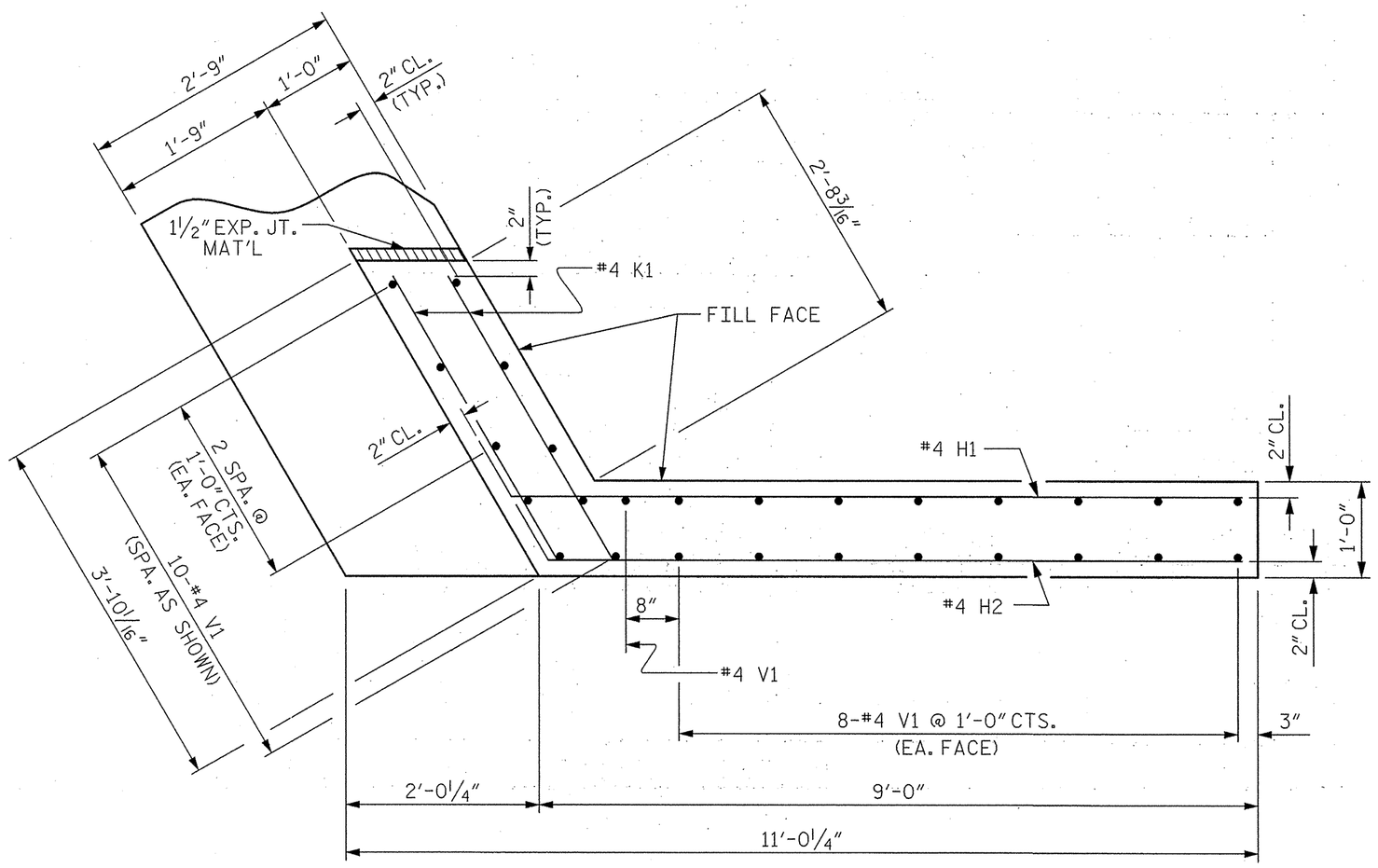

PLAN OF WING (W1)

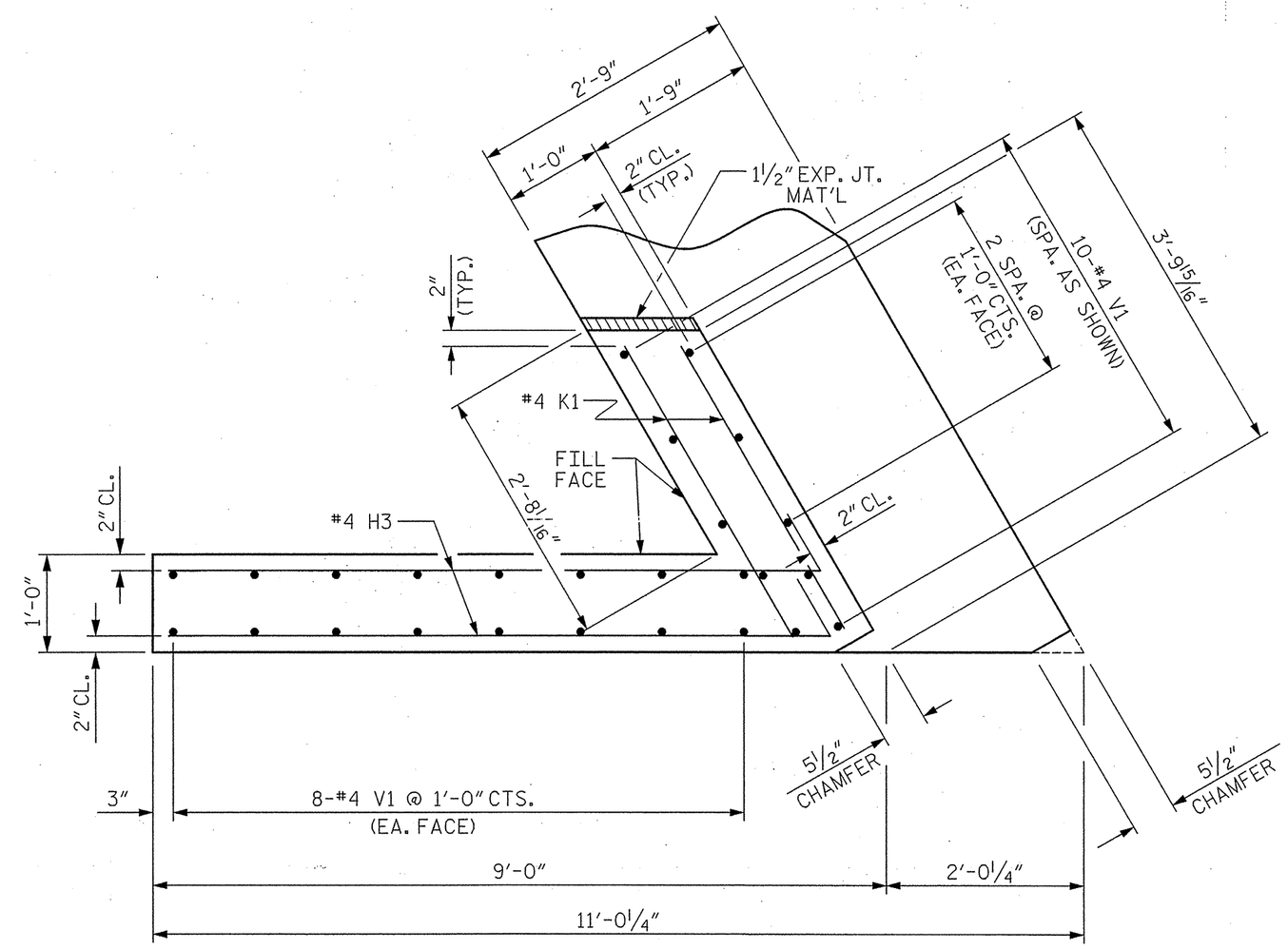

PLAN OF WING (W2)

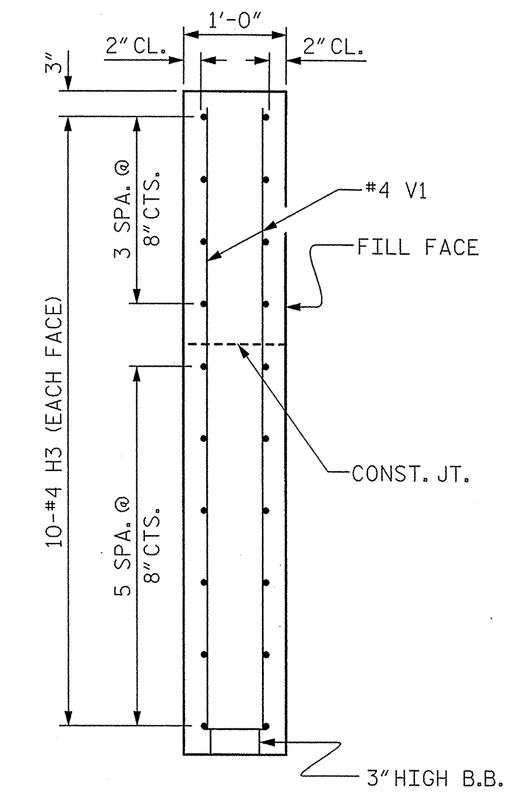

SECTION X-X

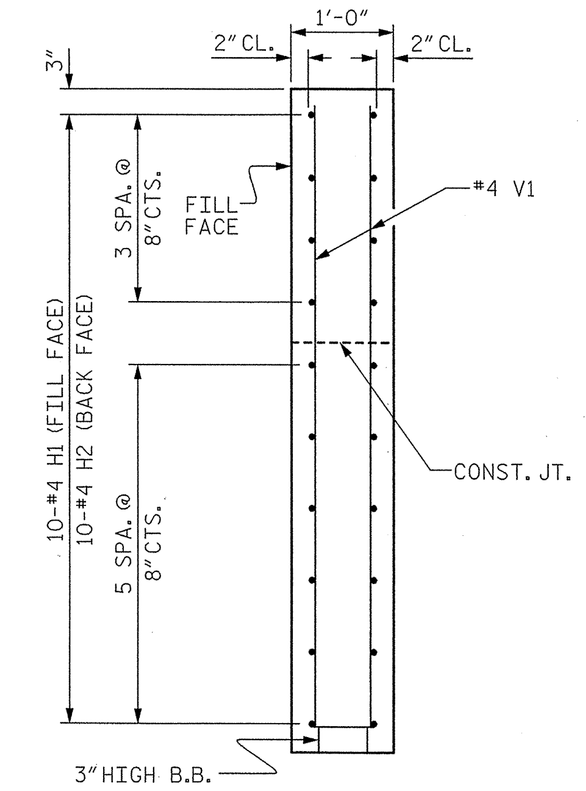

SECTION Y-Y

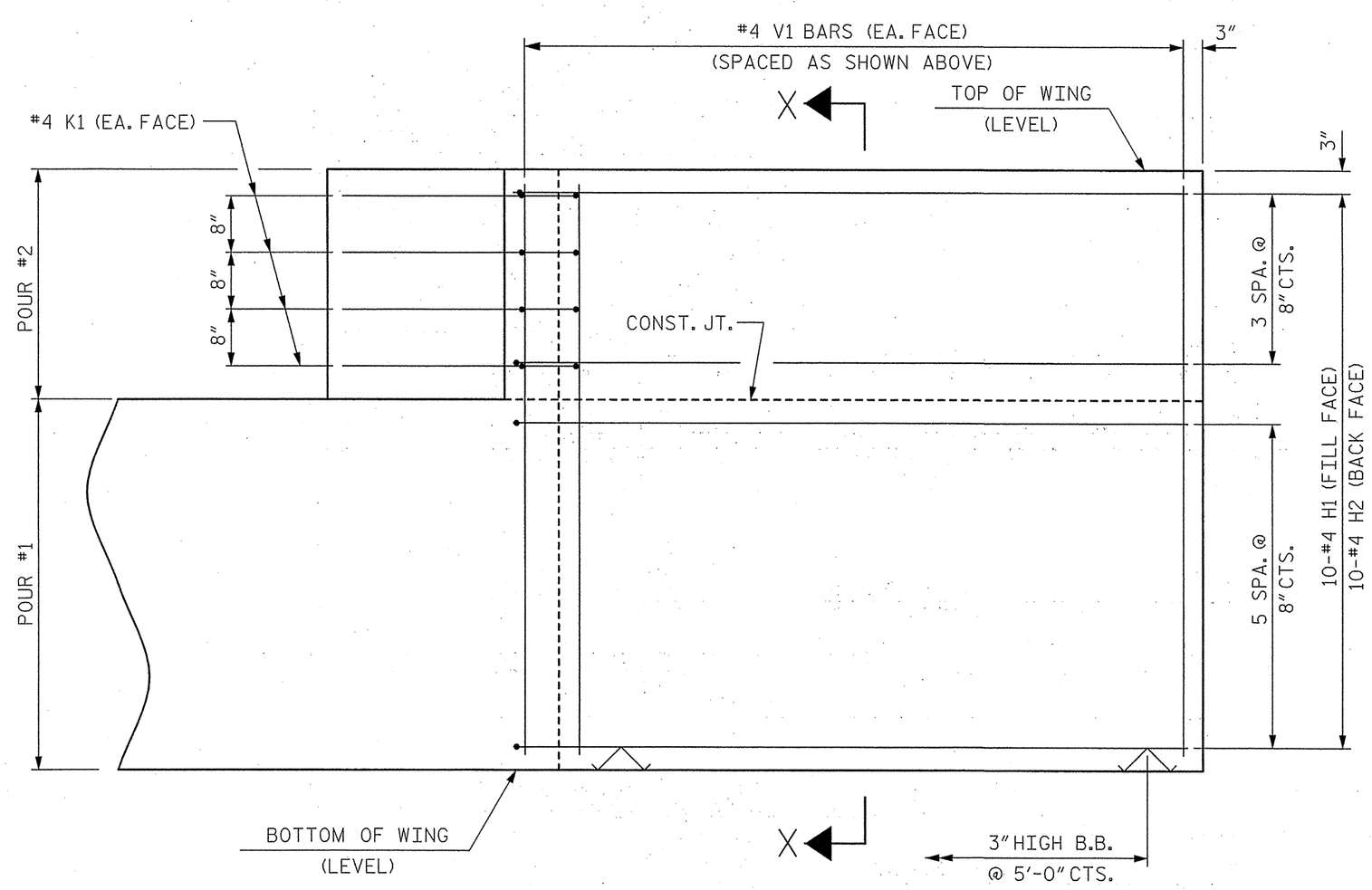

ELEVATION OF WING (W1)

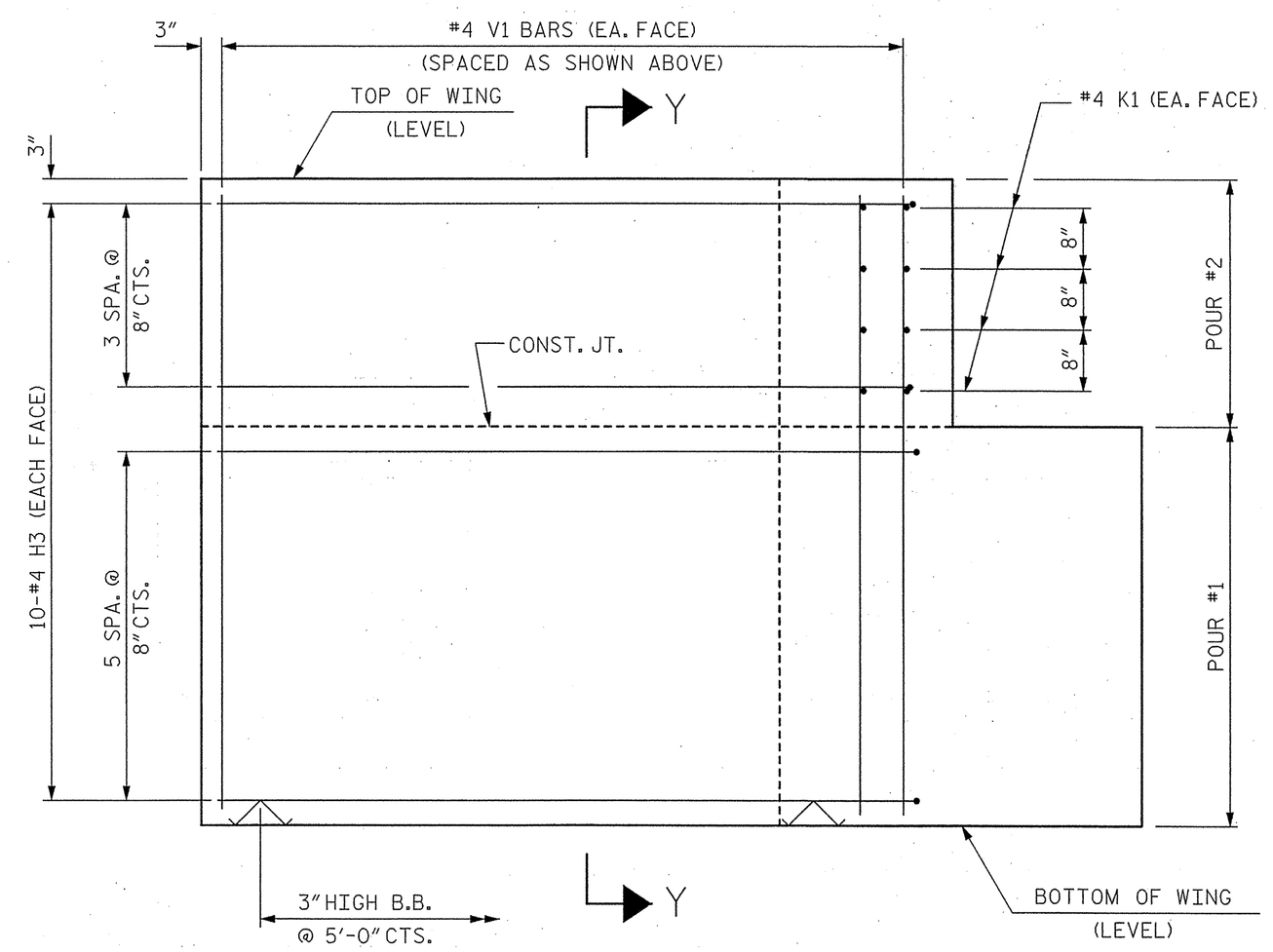

ELEVATION OF WING (W2)

PROJECT NO. 17BP.14.R.69

MACON COUNTY

STATION: 16+28.00 -L-

SHEET 3 OF 4

STATE OF NORTH CAROLINA
DEPARTMENT OF TRANSPORTATION
RALEIGH

SUBSTRUCTURE
END BENT
WING DETAILS

ASSEMBLED BY :	PFC	DATE :	2/13
CHECKED BY :	CMT	DATE :	2/13
DRAWN BY :	DGE	12/09	
CHECKED BY :	MKT	01/10	

WING DETAILS

Prepared in the Office of: Mattern & Craig
CONSULTING ENGINEERS - SURVEYORS
12 BROAD STREET
ASHEVILLE, NORTH CAROLINA 28801
(828) 254-2201 - FAX (828) 254-4562

NORTH CAROLINA PROFESSIONAL SEAL 14308 ENGINEER STEVEN A. CAMPBELL

REVISIONS						
NO.	BY:	DATE:	NO.	BY:	DATE:	
1			3			
2			4			

SHEET NO. S-10

TOTAL SHEETS 13

STD. NO. EB_27_60S4

$$$$$$$SYSTIME$$$$$
$$$$$$$$$$$$$$$$$$$$$$$$$$$$DGN$$$$$$$$$$$$$$$$$$$$$$$$$$
$$$$USERNAME$$$$

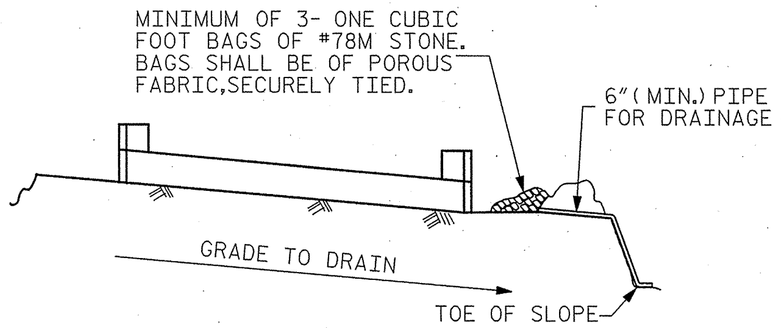

BAGGED STONE AND PIPE SHALL BE PLACED IMMEDIATELY AFTER COMPLETION OF END BENT EXCAVATION. PIPE MAY BE EITHER CONCRETE, CORRUGATED STEEL, CORRUGATED ALUMINUM ALLOY, OR CORRUGATED PLASTIC. PERFORATED PIPE WILL NOT BE ALLOWED.

BAGGED STONE SHALL REMAIN IN PLACE UNTIL THE ENGINEER DIRECTS THAT IT BE REMOVED. THE CONTRACTOR SHALL REMOVE AND DISPOSE OF SILT ACCUMULATIONS AT BAGGED STONE WHEN SO DIRECTED BY THE ENGINEER. BAGS SHALL BE REMOVED AND REPLACED WHENEVER THE ENGINEER DETERMINES THAT THEY HAVE DETERIORATED AND LOST THEIR EFFECTIVENESS.

NO SEPARATE PAYMENT WILL BE MADE FOR THIS WORK AND THE ENTIRE COST OF THIS WORK SHALL BE INCLUDED IN THE UNIT CONTRACT PRICE BID FOR THE SEVERAL PAY ITEMS.

TEMPORARY DRAINAGE AT END BENT

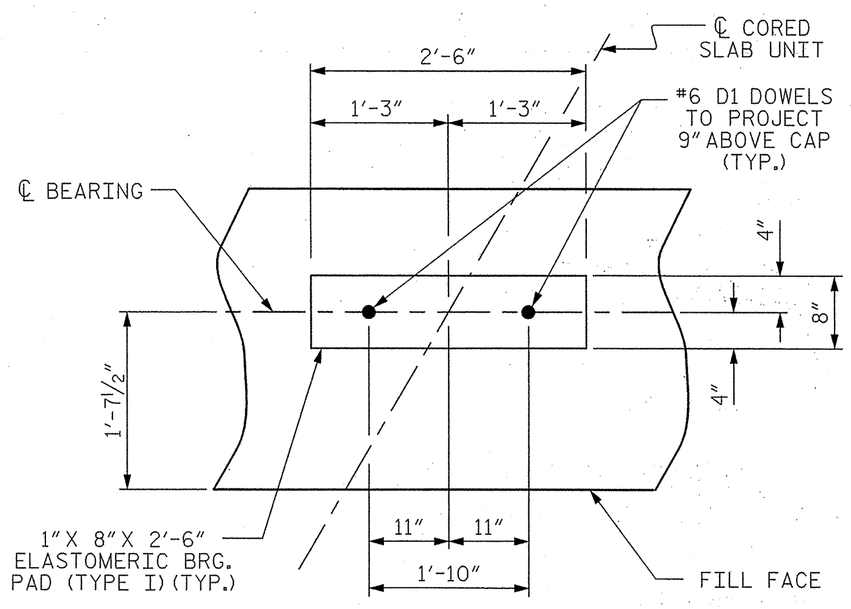

DETAIL "A"

(END BENT No. 1 SHOWN, END BENT No. 2 SIMILAR BY ROTATION)

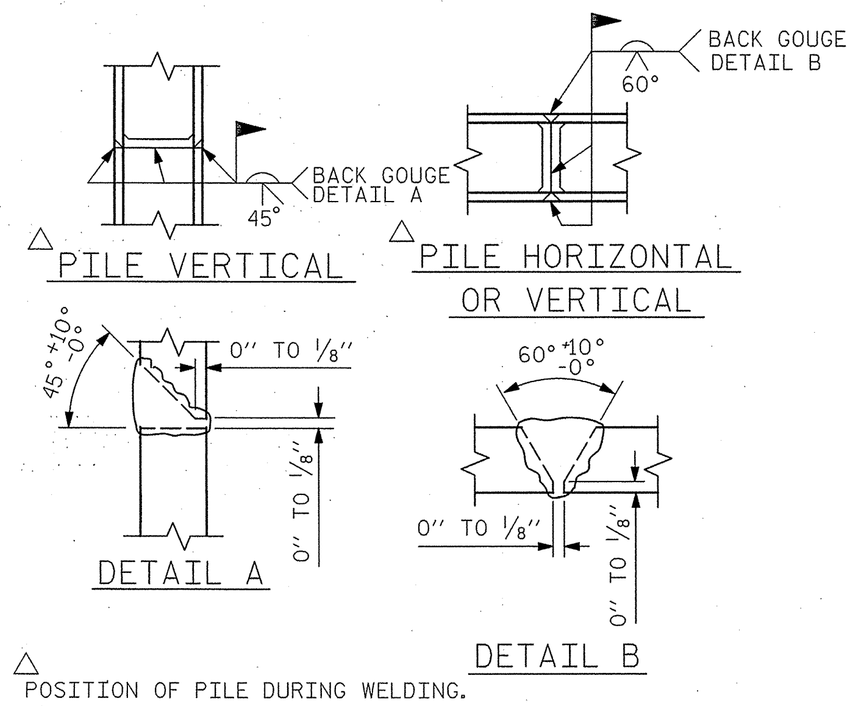

△ POSITION OF PILE DURING WELDING.

PILE SPLICE DETAILS

BAR TYPES

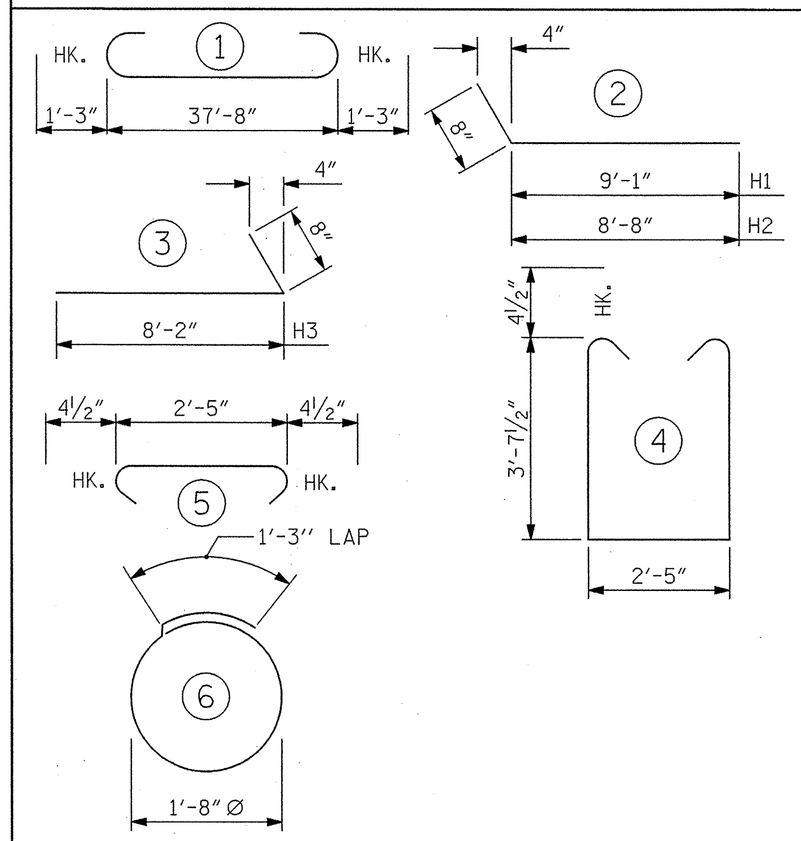

ALL BAR DIMENSIONS ARE OUT TO OUT.

END BENT No. 1	END BENT No. 2
HP 12 X 53 STEEL PILES	HP 12 X 53 STEEL PILES
NO: 5 LIN. FT.= 149	NO: 5 LIN. FT.= 95
STEEL PILE POINTS NO: 5	STEEL PILE POINTS NO: 5

BILL OF MATERIAL FOR ONE END BENT

BAR	NO.	SIZE	TYPE	LENGTH	WEIGHT
B1	8	#9	1	40'-2"	1093
B2	28	#4	STR	20'-2"	377
B3	10	#4	STR	2'-5"	16
D1	18	#6	STR	1'-6"	41
H1	10	#4	2	9'-9"	65
H2	10	#4	2	9'-4"	62
H3	20	#4	3	8'-10"	118
K1	16	#4	STR	3'-3"	35
S1	52	#4	4	10'-5"	362
S2	52	#4	5	3'-2"	110
S3	20	#4	6	6'-6"	87
V1	53	#4	STR	6'-2"	218

REINFORCING STEEL (FOR ONE END BENT) 2584 LBS.

CLASS A CONCRETE BREAKDOWN (FOR ONE END BENT)

POUR #1 CAP, LOWER PART OF WINGS & COLLARS 18.7 C.Y.

POUR #2 UPPER PART OF WINGS 2.2 C.Y.

TOTAL CLASS A CONCRETE 20.9 C.Y.

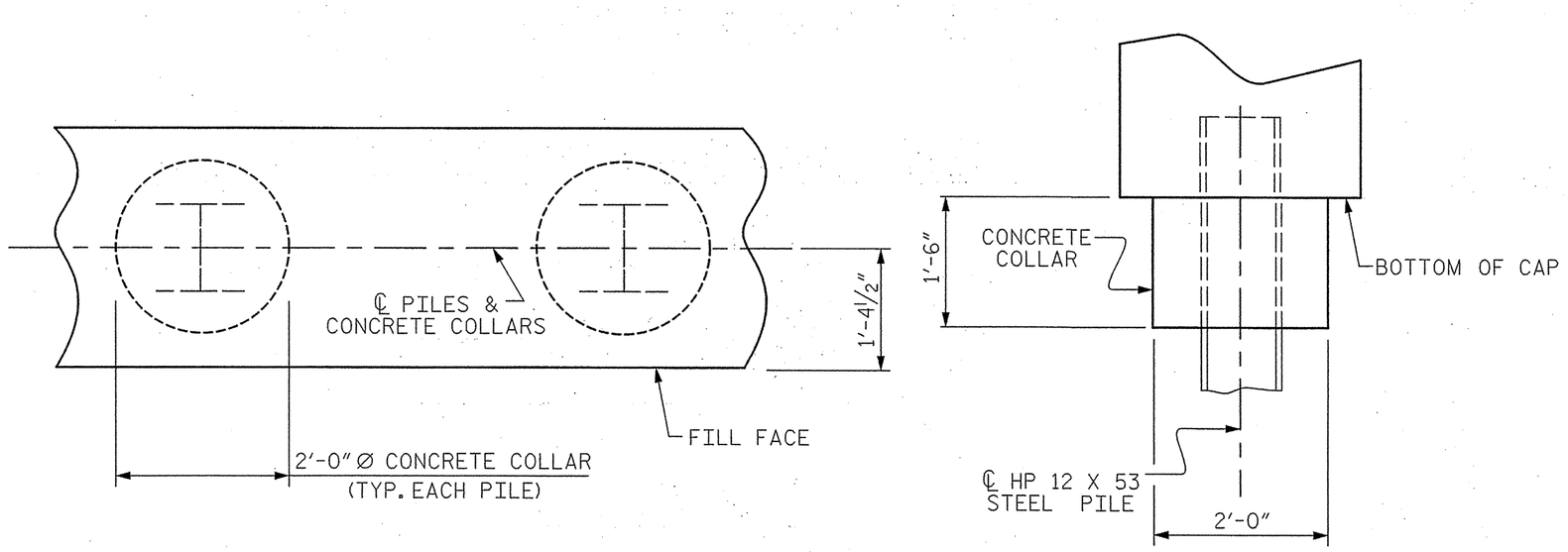

PLAN

ELEVATION

CORROSION PROTECTION FOR STEEL PILES DETAIL

(END BENT No. 1 SHOWN, END BENT No. 2 SIMILAR BY ROTATION)

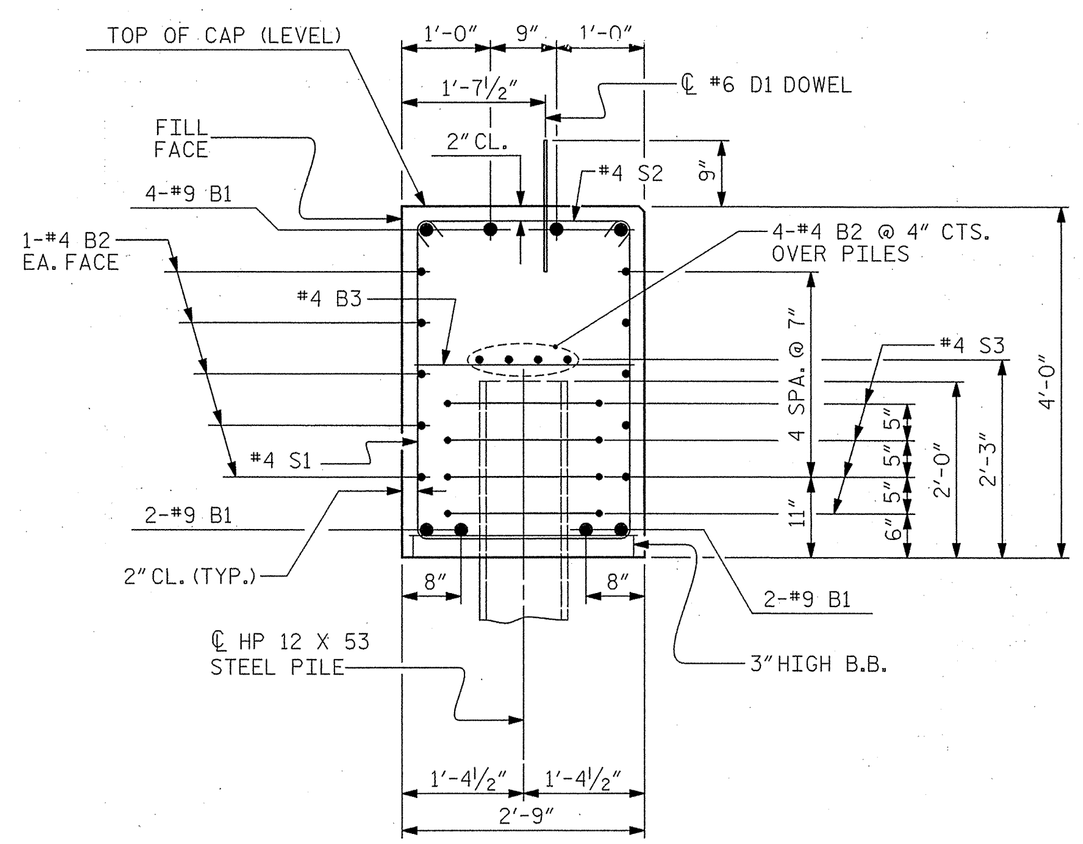

SECTION A-A

(CONCRETE COLLAR NOT SHOWN FOR CLARITY. SEE "CORROSION PROTECTION FOR STEEL PILES DETAIL.")

PROJECT NO. 17BP.14.R.69

MACON COUNTY

STATION: 16+28.00 -L-

SHEET 4 OF 4

STATE OF NORTH CAROLINA
DEPARTMENT OF TRANSPORTATION
RALEIGH

SUBSTRUCTURE

END BENT No. 1 & 2 DETAILS

ASSEMBLED BY :	PFC	DATE :	2/13
CHECKED BY :	CMT	DATE :	2/13
DRAWN BY :	DGE	12/09	
CHECKED BY :	MKT	01/10	

Prepared in the Office of: Mattern & Craig
CONSULTING ENGINEERS - SURVEYORS
12 BROAD STREET
ASHEVILLE, NORTH CAROLINA 28801
(828) 254-2201 - FAX (828) 254-4562

NORTH CAROLINA PROFESSIONAL SEAL 14309 ENGINEER STEVEN A. CAMPBELL

REVISIONS						SHEET NO.
NO.	BY:	DATE:	NO.	BY:	DATE:	S-11
1			3			TOTAL SHEETS
2			4			13

STD. NO. EB_27_60S4

$$$$$$$SYSTIME$$$$$
$$$$$$$$$$$$$$$$$$$$$$$$DGN$$$$$$$$$$$$$$$$$$$$$$$$
$$$$USERNAME$$$$

NOTES :

FOR BERM WIDTH DIMENSIONS, SEE GENERAL DRAWING.

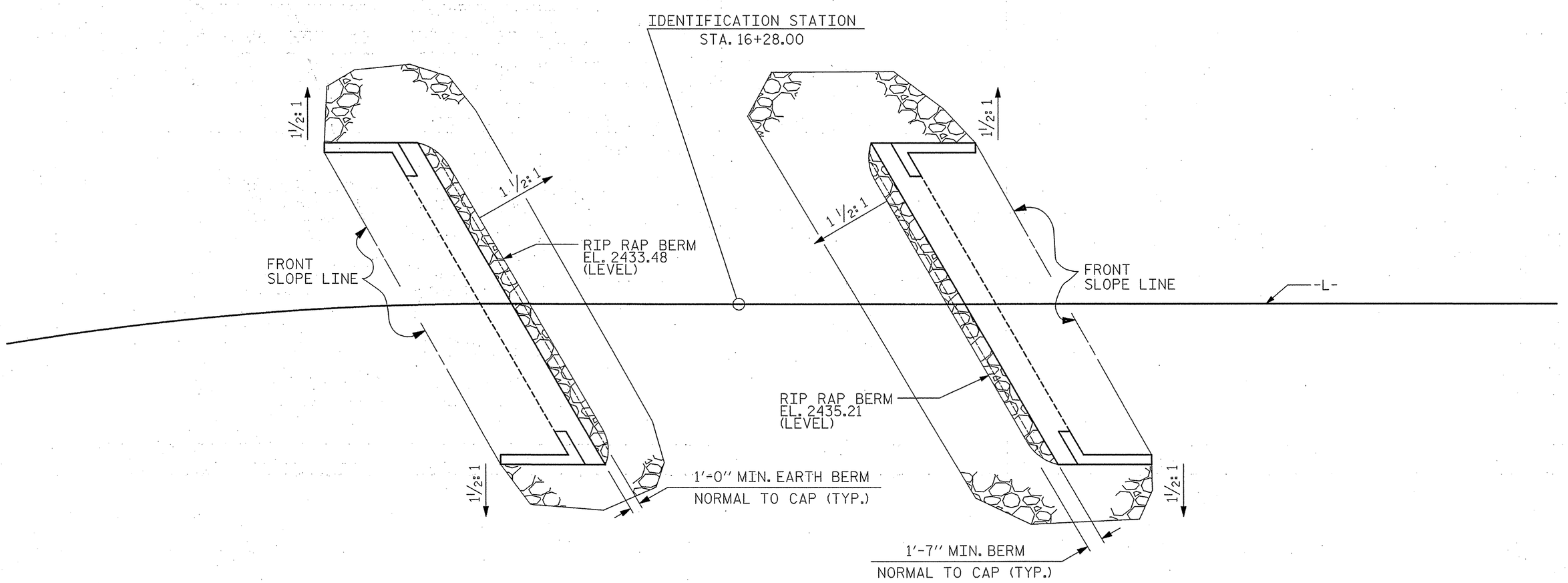

PLAN

ESTIMATED QUANTITIES		
BRIDGE @ STA. 16+28.00	RIP RAP CLASS II (2'-0" THICK)	GEOTEXTILE FOR DRAINAGE
	TONS	SQUARE YARDS
END BENT 1	50	55
END BENT 2	71	79

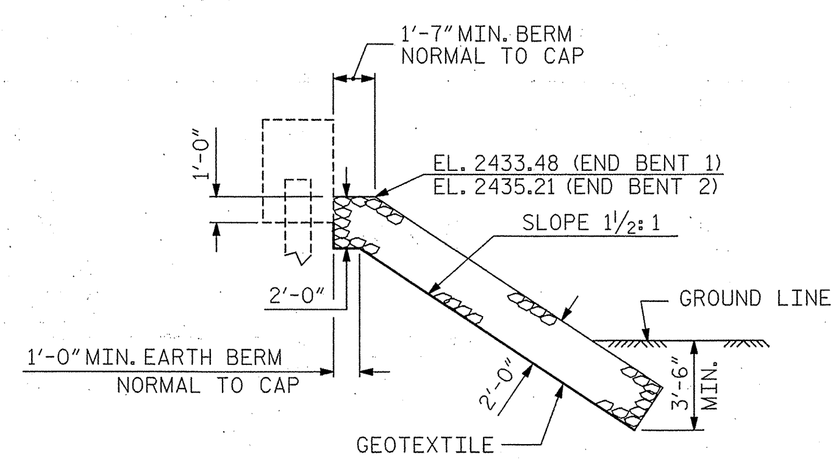

℄ SECTION

BERM RIP RAPPED

SEE PLAN FOR ELEVATIONS.

PROJECT NO. 17BP.14.R.69

MACON COUNTY

STATION: 16+28.00 -L-

STATE OF NORTH CAROLINA
DEPARTMENT OF TRANSPORTATION
RALEIGH

STANDARD

RIP RAP DETAILS

ASSEMBLED BY : PFC	DATE : 2/13		
CHECKED BY : CMT	DATE : 2/13		
DRAWN BY : REK 1/84	REV. 5/1/06R	TLA/GM	
CHECKED BY : RDU 1/84	REV. 10/1/11	MAA/GM	
	REV. 12/21/11	MAA/GM	

Prepared in the Office of: Mattern & Craig
CONSULTING ENGINEERS - SURVEYORS
12 BROAD STREET
ASHEVILLE, NORTH CAROLINA 28801
(828) 254-2201 - FAX (828) 254-4562

NORTH CAROLINA PROFESSIONAL SEAL 14309 ENGINEER STEVEN A. CAMPBELL

REVISIONS						SHEET NO.
NO.	BY:	DATE:	NO.	BY:	DATE:	S-12
1			3			TOTAL SHEETS
2			4			13

$$$$$$SYSTIME$$$$$
$$$$$$$$$$$$$$$$$$$$$$DGN$$$$$$$$$$$$$$$$$$$$$$$$
$$$$USERNAME$$$$

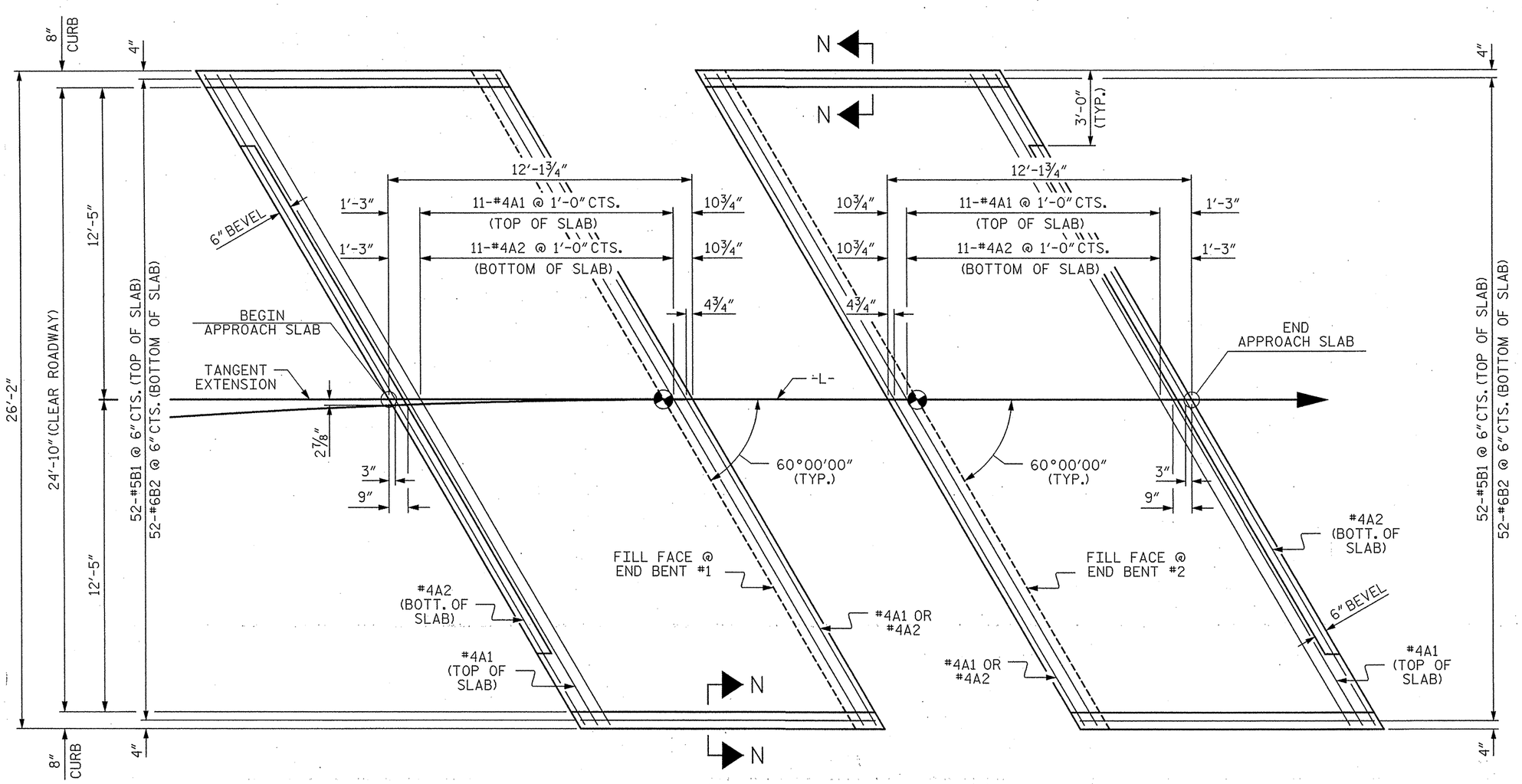

PLAN @ END BENT #1 PLAN @ END BENT #2

DIMENSIONS SHOWN ARE TYPICAL FOR BOTH APPROACH SLABS

NOTES

FOR BRIDGE APPROACH FILL INCLUDING GEOTEXTILE, 4" Ø DRAINAGE PIPE, AND #78M STONE BACKFILL, SEE ROADWAY PLANS.

GEOTEXTILE SHALL BE TYPE 1IN ACCORDANCE WITH THE STANDARD SPECIFICATIONS SECTION 1056.

#78M STONE BACKFILL (CLASS V SELECT MATERIAL) SHALL BE IN ACCORDANCE WITH STANDARD SPECIFICATIONS SECTION 1016.

#78M STONE BACKFILL IS TO BE CONTINUOUS ALONG FILL FACE OF BACKWALL FROM OUTSIDE EDGE TO OUTSIDE EDGE OF APPROACH SLAB.

FOR THE 4" Ø DRAINAGE PIPE OUTLET(S), SEE ROADWAY STANDARD DRAWINGS.

AREA BETWEEN THE WINGWALL AND APPROACH SLAB SHALL BE GRADED TO DRAIN THE WATER AWAY FROM THE FILL FACE OF THE BRIDGE AND SHALL BE PAVED. SEE ROADWAY PLANS.

APPROACH SLAB GROOVING IS NOT REQUIRED.

BILL OF MATERIAL

APPROACH SLAB AT EB #1

BAR	NO.	SIZE	TYPE	LENGTH	WEIGHT
* A1	13	#4	STR	29'-9"	258
A2	13	#4	STR	29'-9"	258
* B1	52	#5	STR	11'-1"	601
B2	52	#6	STR	11'-7"	905
REINFORCING STEEL				LBS.	1163
* EPOXY COATED REINFORCING STEEL				LBS.	859
CLASS AA CONCRETE				C. Y.	15.4

APPROACH SLAB AT EB #2

BAR	NO.	SIZE	TYPE	LENGTH	WEIGHT
* A1	13	#4	STR	29'-9"	258
A2	13	#4	STR	29'-9"	258
* B1	52	#5	STR	11'-1"	601
B2	52	#6	STR	11'-7"	905
REINFORCING STEEL				LBS.	1163
* EPOXY COATED REINFORCING STEEL				LBS.	869
CLASS AA CONCRETE				C. Y.	15.4

SPLICE LENGTHS

BAR SIZE	EPOXY COATED	UNCOATED
#4	2'-0"	1'-9"
#5	2'-6"	2'-2"
#6	3'-10"	2'-7"

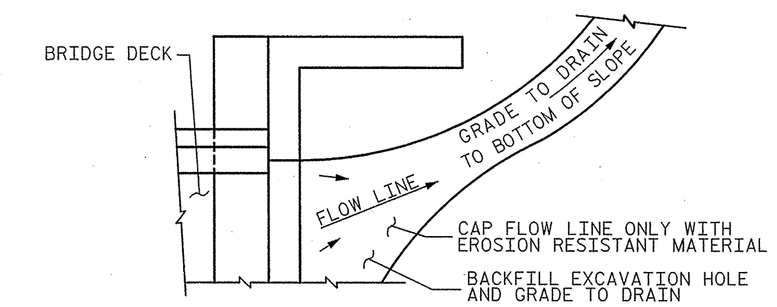

NOTE: IF THE APPROACH SLAB IS NOT CONSTRUCTED IMMEDIATELY AFTER THE BACKFILLING OF THE END BENT EXCAVATION, GRADE TO DRAIN TO THE BOTTOM OF THE SLOPE AND PROVIDE EROSION RESISTANT MATERIAL, SUCH AS FIBERGLASS ROVING OR AS DIRECTED BY THE ENGINEER TO PREVENT SOIL EROSION AND TO PROTECT THE AREA ADJACENT TO THE STRUCTURE. THE CONTRACTOR WILL BE REQUIRED TO REMOVE THESE MATERIALS PRIOR TO CONSTRUCTION OF THE APPROACH SLAB.

TEMPORARY DRAINAGE DETAIL

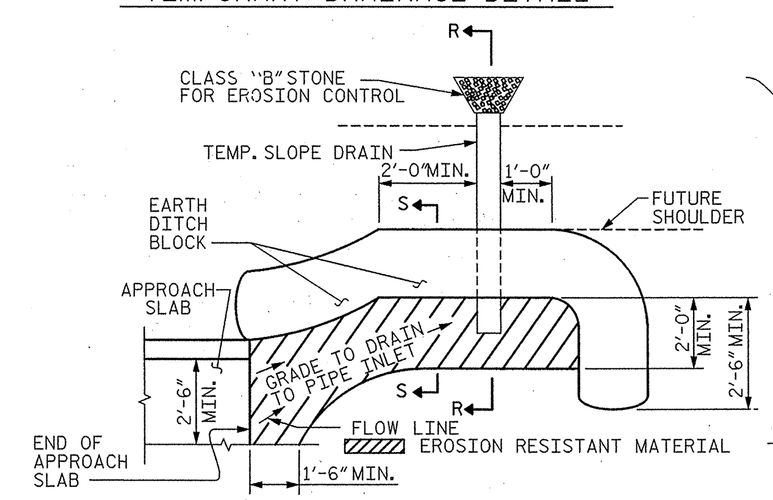

NOTE: IMMEDIATELY AFTER THE CONSTRUCTION OF THE APPROACH SLAB, THE CONTRACTOR SHALL PROVIDE TEMPORARY BERM AND SLOPE DRAIN. CONTRACTOR SHALL GRADE TO PIPE INLET AND PROVIDE EROSION RESISTANT MATERIAL AS SHOWN. THE EROSION RESISTANT MATERIAL SHALL BE EITHER 1) ASPHALT PLANT MIX, TYPE 1 OR TYPE 2, MIN. 2" DEPTH, 2) EROSION CONTROL MAT, OR 3) CONCRETE, AS DIRECTED BY THE ENGINEER. THE SLOPE DRAIN SHALL CONSIST OF A NON-PERFORATED TEMPORARY DRAINAGE PIPE, 12 INCHES IN DIAMETER.

PLAN VIEW

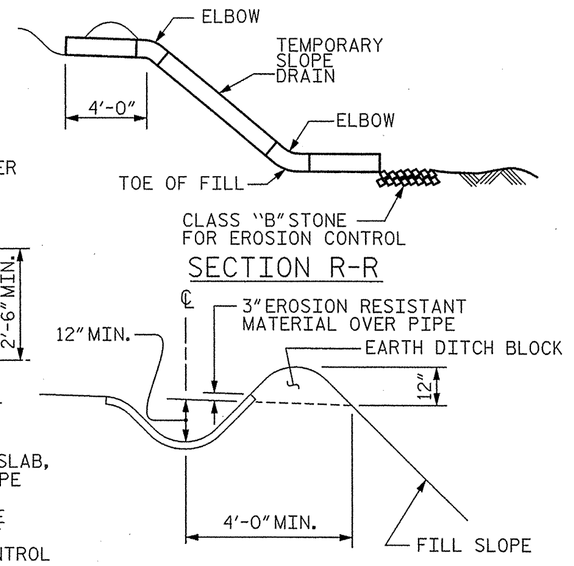

SECTION R-R

SECTION S-S

TEMPORARY BERM AND SLOPE DRAIN DETAILS

(TO BE USED WHEN SHOULDER BERM GUTTER IS REQUIRED)

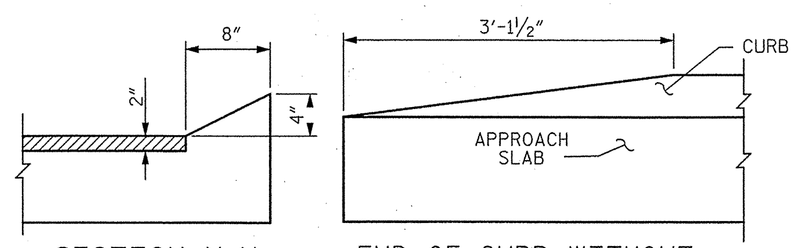

SECTION N-N END OF CURB WITHOUT SHOULDER BERM GUTTER

CURB DETAILS

PROJECT NO. 17BP.14.R.69

MACON COUNTY

STATION: 16+28.00 -L-

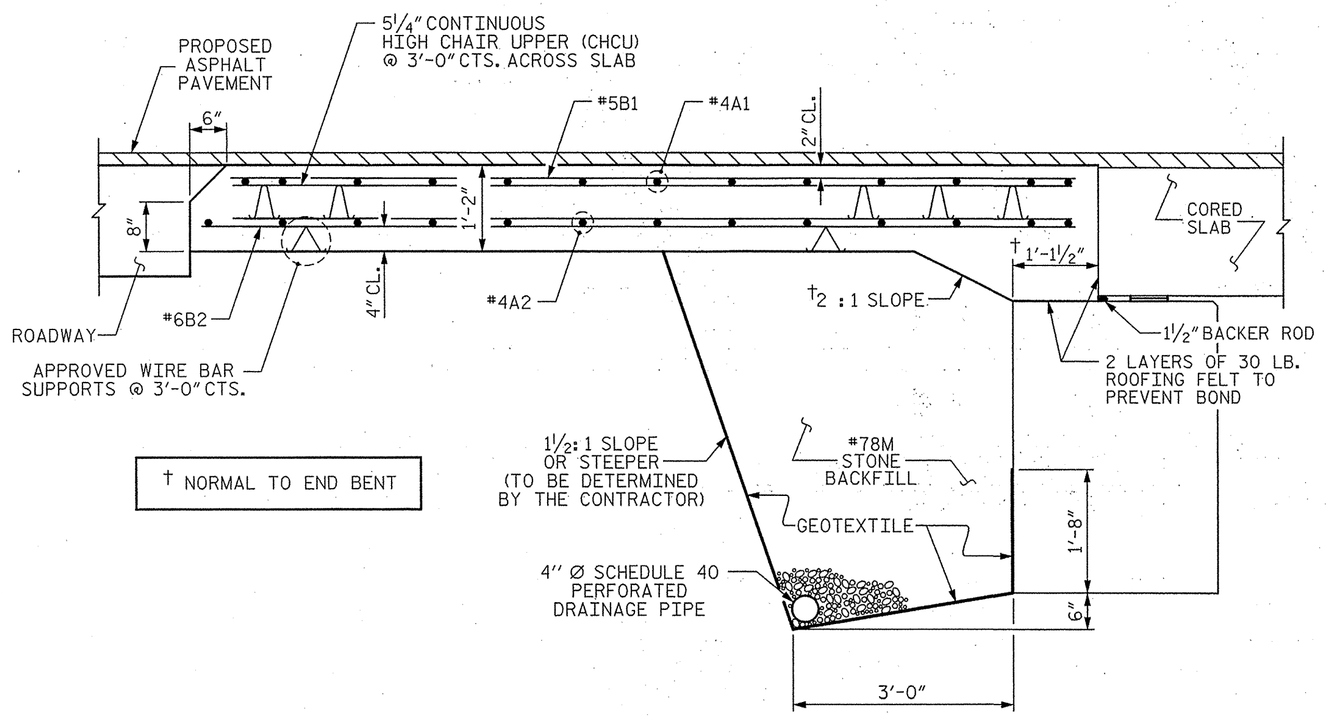

† NORMAL TO END BENT

SECTION THRU SLAB

STATE OF NORTH CAROLINA
DEPARTMENT OF TRANSPORTATION
RALEIGH

STANDARD
BRIDGE APPROACH SLAB
FOR PRESTRESSED CONCRETE
CORED SLAB UNIT
(SUB-REGIONAL TIER)
60° SKEW

REVISIONS						SHEET NO.
NO.	BY:	DATE:	NO.	BY:	DATE:	S-13
1			3			TOTAL SHEETS
2			4			13

Prepared in the Office of: Mattern & Craig
CONSULTING ENGINEERS - SURVEYORS
12 BROAD STREET
ASHEVILLE, NORTH CAROLINA 28801
(828) 254-2201 - FAX (828) 254-4562

NORTH CAROLINA PROFESSIONAL SEAL 14304 ENGINEER STEVEN A. CAMPBELL 6/7/13

ASSEMBLED BY :	PFC	DATE :	2/13
CHECKED BY :	CMT	DATE :	2/13
DRAWN BY : SHS/MAA 5-09	REV. 12-11	MAA/AAC	
CHECKED BY : BCH 5-09			

$$$$$$SYSTIME$$$$$
$$$$$$$$$$$$$$$$$$$$$$$$DGN$$$$$$$$$$$$$$$$$$$$$$$$
$$$$USERNAME$$$$

STD. NO. BAS_27_60S

STANDARD NOTES

DESIGN DATA:

SPECIFICATIONS	A.A.S.H.T.O. (CURRENT)
LIVE LOAD	SEE PLANS
IMPACT ALLOWANCE	SEE A.A.S.H.T.O.
STRESS IN EXTREME FIBER OF	
STRUCTURAL STEEL - AASHTO M270 GRADE 36	20,000 LBS. PER SQ. IN.
- AASHTO M270 GRADE 50W	27,000 LBS. PER SQ. IN.
- AASHTO M270 GRADE 50	27,000 LBS. PER SQ. IN.
REINFORCING STEEL IN TENSION	
GRADE 60	24,000 LBS. PER SQ. IN.
CONCRETE IN COMPRESSION	1,200 LBS. PER SQ. IN.
CONCRETE IN SHEAR	SEE A.A.S.H.T.O.
STRUCTURAL TIMBER - TREATED OR	
UNTREATED - EXTREME FIBER STRESS	1,800 LBS. PER SQ. IN.
COMPRESSION PERPENDICULAR TO GRAIN OF TIMBER	375 LBS. PER SQ. IN.
EQUIVALENT FLUID PRESSURE OF EARTH	30 LBS. PER CU. FT. (MINIMUM)

MATERIAL AND WORKMANSHIP:

EXCEPT AS MAY OTHERWISE BE SPECIFIED ON PLANS OR IN THE SPECIAL PROVISIONS, ALL MATERIAL AND WORKMANSHIP SHALL BE IN ACCORDANCE WITH THE 2012 "STANDARD SPECIFICATIONS FOR ROADS AND STRUCTURES" OF THE N. C. DEPARTMENT OF TRANSPORTATION.

STEEL SHEET PILING FOR PERMANENT OR TEMPORARY APPLICATIONS SHALL BE HOT ROLLED.

CONCRETE:

UNLESS OTHERWISE REQUIRED ON PLANS, CLASS A CONCRETE SHALL BE USED FOR ALL PORTIONS OF ALL STRUCTURES WITH THE EXCEPTION THAT: CLASS AA CONCRETE SHALL BE USED IN BRIDGE SUPERSTRUCTURES, ABUTMENT BACKWALLS, AND APPROACH SLABS; AND CLASS B CONCRETE SHALL BE USED FOR SLOPE PROTECTION AND RIP RAP.

CONCRETE CHAMFERS:

UNLESS OTHERWISE NOTED ON THE PLANS, ALL EXPOSED CORNERS ON STRUCTURES SHALL BE CHAMFERED 3/4" WITH THE FOLLOWING EXCEPTIONS: TOP CORNERS OF CURBS MAY BE ROUNDED TO 1-1/2" RADIUS WHICH IS BUILT INTO CURB FORMS; CORNERS OF TRANSVERSE FLOOR EXPANSION JOINTS SHALL BE ROUNDED WITH A 1/4" FINISHING TOOL UNLESS OTHERWISE REQUIRED ON PLANS; AND CORNERS OF EXPANSION JOINTS IN THE ROADWAY FACES AND TOPS OF CURBS AND SIDEWALKS SHALL BE ROUNDED TO A 1/4" RADIUS WITH A FINISHING STONE OR TOOL UNLESS OTHERWISE REQUIRED ON PLANS.

DOWELS:

DOWELS WHEN INDICATED ON PLANS AS FOR CULVERT EXTENSIONS, SHALL BE EMBEDDED AT LEAST 12" INTO THE OLD CONCRETE AND GROUTED INTO PLACE WITH 1:2 CEMENT MORTAR.

ALLOWANCE FOR DEAD LOAD DEFLECTION, SETTLEMENT, ETC. IN CASTING SUPERSTRUCTURES:

BRIDGES SHALL BE BUILT ON THE GRADE OR VERTICAL CURVE SHOWN ON PLANS. SLABS, CURBS AND PARAPETS SHALL CONFORM TO THE GRADE OR CURVE.

ALL DIMENSIONS WHICH ARE GIVEN IN SECTION AND ARE AFFECTED BY DEAD LOAD DEFLECTIONS ARE DIMENSIONS AT CENTER LINE OF BEARING UNLESS OTHERWISE NOTED ON PLANS. IN SETTING FORMS FOR STEEL BEAM BRIDGES AND PRESTRESSED CONCRETE GIRDER BRIDGES, ADJUSTMENTS SHALL BE MADE DUE TO THE DEAD LOAD DEFLECTIONS FOR THE ELEVATIONS SHOWN. WHERE BLOCKS ARE SHOWN OVER BEAMS FOR BUILDING UP TO THE SLAB, THE VERTICAL DIMENSIONS OF THE BLOCKS SHALL BE ADJUSTED BETWEEN BEARINGS TO COMPENSATE FOR DEAD LOAD DEFLECTIONS, VERTICAL CURVE ORDINATE, AND ACTUAL BEAM CAMBER. WHERE BOTTOM OF SLAB IS IN LINE WITH BOTTOM OF TOP FLANGES, DEPTH OF SLAB BETWEEN BEARINGS SHALL BE ADJUSTED TO COMPENSATE FOR DEAD LOAD DEFLECTION, VERTICAL CURVE ORDINATE, AND ACTUAL BEAM CAMBER.

IN SETTING FALSEWORK AND FORMS FOR REINFORCED CONCRETE SPANS, AN ALLOWANCE SHALL BE MADE FOR DEAD LOAD DEFLECTIONS, SETTLEMENT OF FALSEWORK, AND PERMANENT CAMBER WHICH SHALL BE PROVIDED FOR IN ADDITION TO THE ELEVATIONS SHOWN. AFTER REMOVAL OF THE FALSEWORK, THE FINISHED STRUCTURES SHALL CONFORM TO THE PROFILE AND ELEVATIONS SHOWN ON THE PLANS AND CONSTRUCTION ELEVATIONS FURNISHED BY THE ENGINEER.

DETAILED DRAWINGS FOR FALSEWORK OR FORMS FOR BRIDGE SUPERSTRUCTURE AND ANY STRUCTURE OR PARTS OF A STRUCTURE AS NOTED ON THE PLANS SHALL BE SUBMITTED TO THE ENGINEER FOR APPROVAL BEFORE CONSTRUCTION OF THE FALSEWORK OR FORMS IS STARTED.

REINFORCING STEEL:

ALL REINFORCING STEEL SHALL BE DEFORMED. DIMENSIONS RELATIVE TO PLACEMENT OF REINFORCING ARE TO CENTERS OF BARS UNLESS OTHERWISE INDICATED IN THE PLANS. DIMENSIONS ON BAR DETAILS ARE TO CENTERS OF BARS OR ARE OUT TO OUT AS INDICATED ON PLANS.

WIRE BAR SUPPORTS SHALL BE PROVIDED FOR REINFORCING STEEL WHERE INDICATED ON THE PLANS. WHEN BAR SUPPORT PIECES ARE PLACED IN CONTINUOUS LINES, THEY SHALL BE SO PLACED THAT THE ENDS OF THE SUPPORTING WIRES SHALL BE LAPPED TO LOCK LEGS ON ADJOINING PIECES.

STRUCTURAL STEEL:

AT THE CONTRACTOR'S OPTION, HE MAY SUBSTITUTE 7/8" Ø SHEAR STUDS FOR THE ¾" Ø STUDS SPECIFIED ON THE PLANS. THIS SUBSTITUTION SHALL BE MADE AT THE RATE OF 3 - 7/8" Ø STUDS FOR 4 - 3/4" Ø STUDS, AND STUD SPACING CHANGES SHALL BE MADE AS NECESSARY TO PROVIDE THE SAME EQUIVALENT NUMBER OF 7/8" Ø STUDS ALONG THE BEAM AS SHOWN FOR 3/4" Ø STUDS BASED ON THE RATIO OF 3 - 7/8" Ø STUDS FOR 4 - 3/4" Ø STUDS. STUDS OF THE LENGTH SPECIFIED ON THE PLANS MUST BE PROVIDED. THE MAXIMUM SPACING SHALL BE 2'-0".

EXCEPT AT THE INTERIOR SUPPORTS OF CONTINUOUS BEAMS WHERE THE COVER PLATE IS IN CONTACT WITH BEARING PLATE, THE CONTRACTOR MAY, AT HIS OPTION, SUBSTITUTE FOR THE COVER PLATES DESIGNATED ON THE PLANS COVER PLATES OF THE EQUIVALENT AREA PROVIDED THESE PLATES ARE AT LEAST 5/16" IN THICKNESS AND DO NOT EXCEED A WIDTH EQUAL TO THE FLANGE WIDTH LESS 2" OR A THICKNESS EQUAL TO 2 TIMES THE FLANGE THICKNESS. THE SIZE OF FILLET WELDS SHALL CONFORM TO THE REQUIREMENTS OF THE CURRENT ANSI/AASHTO/AWS "BRIDGE WELDING CODE". ELECTROSLAG WELDING WILL NOT BE PERMITTED.

WITH THE SOLE EXCEPTION OF EDGES AT SURFACES WHICH BEAR ON OTHER SURFACES, ALL SHARP EDGES AND ENDS OF SHAPES AND PLATES SHALL BE SLIGHTLY ROUNDED BY SUITABLE MEANS TO A RADIUS OF APPROXIMATELY 1/16 INCH OR EQUIVALENT FLAT SURFACE AT A SUITABLE ANGLE PRIOR TO PAINTING, GALVANIZING, OR METALLIZING.

HANDRAILS AND POSTS:

METAL STANDARDS AND FACES OF THE CONCRETE END POSTS FOR THE METAL RAIL SHALL BE SET NORMAL TO THE GRADE OF THE CURB, UNLESS OTHERWISE SHOWN ON PLANS. THE METAL RAIL AND TOPS OF CONCRETE POSTS USED WITH THE ALUMINUM RAIL SHALL BE BUILT PARALLEL TO THE GRADE OF THE CURB.

METAL HANDRAILS SHALL BE IN ACCORDANCE WITH THE PLANS. RAILS SHALL BE AS MANUFACTURED FOR BRIDGE RAILING. CASTINGS SHALL BE OF A UNIFORM APPEARANCE. FINS AND OTHER DEFORMATIONS RESULTING FROM CASTING OR OTHERWISE SHALL BE REMOVED IN A MANNER SO THAT A UNIFORM COLORING OF THE COMPLETED CASTING SHALL BE OBTAINED. CASTINGS WITH DISCOLORATIONS OR OF NON-UNIFORM COLORING WILL NOT BE ACCEPTED. CERTIFIED MILL REPORTS ARE REQUIRED FOR METAL RAILS AND POSTS.

SPECIAL NOTES:

GENERALLY, IN CASE OF DISCREPANCY, THIS STANDARD SHEET OF NOTES SHALL GOVERN OVER THE SPECIFICATIONS, BUT THE REMAINDER OF THE PLANS SHALL GOVERN OVER NOTES HEREON, AND SPECIAL PROVISIONS SHALL GOVERN OVER ALL. SEE SPECIFICATIONS ARTICLE 105-4.

ENGLISH

JANUARY, 1990