09/08/99

TIP PROJECT: 17BP.14.R.73

CONTRACT: DN00193

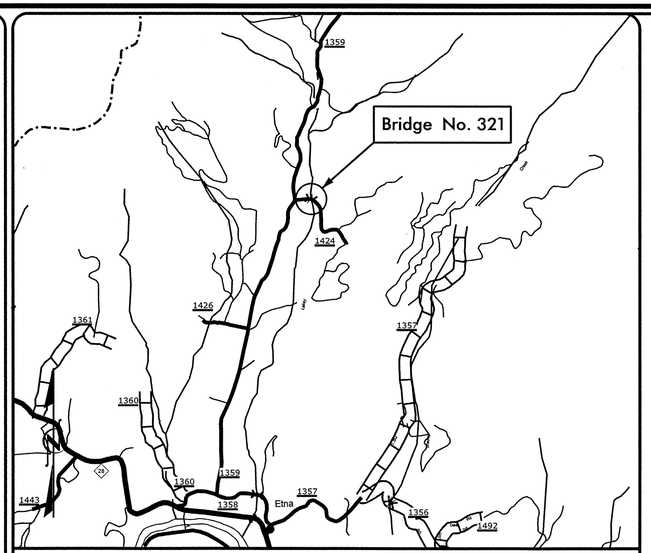

VICINITY MAP

See Sheet 1-A For Index of Sheets
See Sheet 1-B For Conventional Symbols

STATE OF NORTH CAROLINA
DIVISION OF HIGHWAYS

MACON COUNTY

LOCATION: BRIDGE 321 OVER LAKEY CREEK ON SR 1424 (CLARK ROAD)

TYPE OF WORK: GRADING, PAVING, DRAINAGE & STRUCTURE

STATE	STATE PROJECT REFERENCE NO.	SHEET NO.	TOTAL SHEETS
N.C.	17BP.14.R.73	1	

STATE PROJ. NO.	F.A. PROJ. NO.	DESCRIPTION
17BP.14.R.73		PE, R/W, UTIL
17BP.14.R.73		CONST

NAD 83/
NSRS 2007

STA. 10+00.00 -L- BEGIN TIP PROJECT 17BP.14.R.73

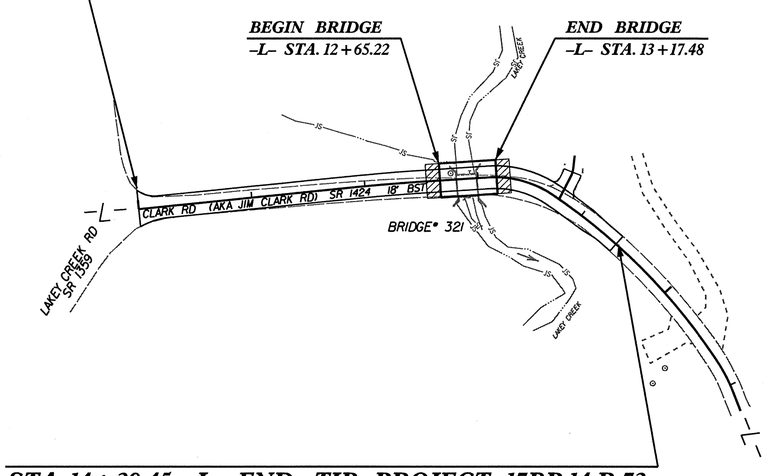

STA. 14+39.45 -L- END TIP PROJECT 17BP.14.R.73

GRAPHIC SCALES

50 25 0 50 100
PLANS

50 25 0 50 100
PROFILE (HORIZONTAL)

10 5 0 10 20
PROFILE (VERTICAL)

DESIGN DATA

ADT (1995) = 10

V = 20 MPH

FUNC CLASS =
LOCAL
SUB-REGIONAL TIER

PROJECT LENGTH

LENGTH ROADWAY TIP PROJECT 17BP.14.R.73	=	0.0732 MI
LENGTH STRUCTURE TIP PROJECT 17BP.14.R.73	=	0.0100 MI
TOTAL LENGTH TIP PROJECT 17BP.14.R.73	=	0.0832 MI

NCDOT CONTACT: JOSHUA DEYTON, P.E.
PROJECT ENGINEER

Prepared In the Office of:
Mattern & Craig
CONSULTING ENGINEERS - SURVEYORS
12 BROAD STREET
ASHEVILLE, NORTH CAROLINA 28801
(828) 254-2201 - FAX (828) 254-4562

2012 STANDARD SPECIFICATIONS

RIGHT OF WAY DATE:

LETTING DATE:

JAMES B. VOSO, P.E.
PROJECT ENGINEER

DANA BOLDEN, P.E.
PROJECT DESIGN ENGINEER

HYDRAULICS ENGINEER
SIGNATURE:

ROADWAY DESIGN ENGINEER
SIGNATURE:

DIVISION OF HIGHWAYS
STATE OF NORTH CAROLINA

P.E.
STATE HIGHWAY DESIGN ENGINEER

10:35:24 AM
R:\3215\Bridge321\Roadway\Proj\17BP14R73_RDY_TSH.dgn
bgross

PROJECT REFERENCE NO.	SHEET NO.
17BP.14.R.73	1-A
ROADWAY DESIGN ENGINEER	PAVEMENT DESIGN ENGINEER

INDEX OF SHEETS – GENERAL NOTES – LIST OF STANDARDS

INDEX OF SHEETS

SHEET NUMBER	SHEET
1	Title Sheet
1–A	Index of Sheets, General Notes, and List of Standards
1–B	Conventional Symbols
1–C	Survey Control Sheets
2	Typical Sections, Pavement Schedule, and Wedging Detail
3	Summary of Quantities
3–A	Summary of Drainage Quantities, and Summary of Guardrail
3–B	Earthwork Summary
4	Plan Sheet
5	Profile Sheet
REU–1 THRU RF–2	Roadside Environmental Plans
TMP–1 THRU TMP–3	Transportation Management Plans
PMP–01	Pavement Marking Plans
EC–1 THRU RF–1	Erosion Control Plans
X–1A	Cross–Section Summary Sheet
X–1 THRU X–3	Cross–Sections
TS–0	Structure Plans Title Sheet
S–01 THRU S–14	Structure Plans
SN	Structure Plans – Standard Notes Sheet

2012 ROADWAY ENGLISH STANDARD DRAWINGS

The following Roadway Standards as appear in "Roadway Standard Drawings" Highway Design Branch – N. C. Department of Transportation – Raleigh, N. C., Dated January, 2012 are applicable to this project and by reference hereby are considered a part of these plans:

STD.NO.	TITLE
DIVISION 2 – EARTHWORK	
200.02	Method of Clearing – Method II
225.02	Guide for Grading Subgrade – Secondary and Local
225.04	Method of Obtaining Superelevation – Two Lane Pavement
DIVISION 3 – PIPE CULVERTS	
300.01	Method of Pipe Installation
DIVISION 4 – MAJOR STRUCTURES	
422.11	Reinforced Bridge Approach Fills – Sub Regional Tier
DIVISION 5 – SUBGRADE, BASES AND SHOULDERS	
560.01	Method of Shoulder Construction – High Side of Superelevated Curve – Method I
DIVISION 8 – INCIDENTALS	
815.03	Pipe Underdrain and Blind Drain
840.14	Concrete Drop Inlet – 12" thru 30" Pipe
840.16	Drop Inlet Frame and Grates – for use with Std. Dwg 840.14 and 840.15
840.35	Traffic Bearing Grated Drop Inlet – for Cast Iron Double Frame and Grates
846.01	Concrete Curb, Gutter and Curb & Gutter
846.04	Drop Inlet Installation in Shoulder Berm Gutter
862.01	Guardrail Placement
862.02	Guardrail Installation
862.03	Structure Anchor Units

GENERAL NOTES: 2012 SPECIFICATIONS

EFFECTIVE: 01–17–12
REVISED: 07/30/12

GRADE LINE:
GRADING AND SURFACING:

THE GRADE LINES SHOWN DENOTE THE FINISHED ELEVATION OF THE PROPOSED SURFACING AT GRADE POINTS SHOWN ON THE TYPICAL SECTIONS. GRADE LINES MAY BE ADJUSTED AT THEIR BEGINNING AND ENDING AND AT STRUCTURES AS DIRECTED BY THE ENGINEER IN ORDER TO SECURE A PROPER TIE–IN.

CLEARING:

CLEARING ON THIS PROJECT SHALL BE PERFORMED TO THE LIMITS ESTABLISHED BY METHOD II.

SUPERELEVATION:

ALL CURVES ON THIS PROJECT SHALL BE SUPERELEVATED IN ACCORDANCE WITH STD. NO. 225.04 USING THE RATE OF SUPERELEVATION AND RUNOFF SHOWN ON THE PLANS. SUPERELEVATION IS TO BE REVOLVED ABOUT THE GRADE POINTS SHOWN ON THE TYPICAL SECTIONS.

SHOULDER CONSTRUCTION:

ASPHALT, EARTH, AND CONCRETE SHOULDER CONSTRUCTION ON THE HIGH SIDE OF SUPERELEVATED CURVES SHALL BE IN ACCORDANCE WITH STD. NO. 560.01.

SIDE ROADS:

THE CONTRACTOR WILL BE REQUIRED TO DO ALL NECESSARY WORK TO PROVIDE SUITABLE CONNECTIONS WITH ALL ROADS, STREETS, AND DRIVES ENTERING THIS PROJECT. THIS WORK WILL BE PAID FOR AT THE CONTRACT UNIT PRICE FOR THE PARTICULAR ITEMS INVOLVED.

GUARDRAIL:

THE GUARDRAIL LOCATIONS SHOWN ON THE PLANS MAY BE ADJUSTED DURING CONSTRUCTION AS DIRECTED BY THE ENGINEER. THE CONTRACTOR SHOULD CONSULT WITH THE ENGINEER PRIOR TO ORDERING GUARDRAIL MATERIAL.

TEMPORARY SHORING:

SHORING REQUIRED FOR THE MAINTENANCE OF TRAFFIC NOT SHOWN ON THE PLANS WILL BE PAID FOR AT THE CONTRACT PRICE FOR "TEMPORARY SHORING".

SUBSURFACE PLANS:

SUBSURFACE PLANS ARE AVAILABLE FOR THE STRUCTURE ONLY. THE CONTRACTOR SHOULD MAKE HIS OWN INVESTIGATION AS TO THE OTHER SUBSURFACE CONDITIONS.

END BENTS:

THE ENGINEER SHALL CHECK THE STRUCTURE END BENT PLANS, DETAILS, AND CROSS–SECTION PRIOR TO SETTING OF THE SLOPE STAKES FOR THE EMBANKMENT OR EXCAVATION APPROACHING A BRIDGE.

RIGHT–OF–WAY MARKERS:

ALL RIGHT–OF–WAY MARKERS ON THIS PROJECT SHALL BE PLACED BY CONTRACT IN ACCORDANCE WITH SECTION 801 OF THE 2012 NORTH CAROLINA STANDARD SPECIFICATIONS FOR ROADS AND STRUCTURES.

6/2/99
3:49:32 PM
R:\5325\Bridge321\Roadway\Proj\17BP14R73_RDY_TYP.dgn
bpcoes

PROJECT REFERENCE NO.	SHEET NO.
17BPJ4.R.T3	1-B

Note: Not to Scale

**S.U.E. = Subsurface Utility Engineering*

STATE OF NORTH CAROLINA
DIVISION OF HIGHWAYS

CONVENTIONAL PLAN SHEET SYMBOLS

BOUNDARIES AND PROPERTY:

- State Line
- County Line
- Township Line
- City Line
- Reservation Line
- Property Line
- Existing Iron Pin — EIP
- Property Corner
- Property Monument — ECM
- Parcel/Sequence Number — 123
- Existing Fence Line
- Proposed Woven Wire Fence
- Proposed Chain Link Fence
- Proposed Barbed Wire Fence
- Existing Wetland Boundary — WLB
- Proposed Wetland Boundary — WLB
- Existing High Quality Wetland Boundary — HQ WLB
- Existing Endangered Animal Boundary — EAB
- Existing Endangered Plant Boundary — EPB

BUILDINGS AND OTHER CULTURE:

- Gas Pump Vent or U/G Tank Cap
- Sign — S
- Well — W
- Small Mine
- Foundation
- Area Outline
- Cemetery
- Building
- School
- Church
- Dam

HYDROLOGY:

- Stream or Body of Water
- Hydro, Pool or Reservoir
- River Basin Buffer — RBB
- Flow Arrow
- Disappearing Stream
- Spring
- Swamp Marsh
- Proposed Lateral, Tail, Head Ditch — FLOW
- False Sump

RAILROADS:

- Standard Guage — CSX TRANSPORTATION
- RR Signal Milepost — MILEPOST 35
- Switch — SWITCH
- RR Abandoned
- RR Dismantled

RIGHT OF WAY:

- Baseline Control Point
- Existing Right of Way Marker
- Existing Right of Way Line
- Proposed Right of Way Line — RW
- Proposed Right of Way Line with Iron Pin and Cap Marker — RW
- Proposed Right of Way Line with Concrete or Granite Marker — RW
- Existing Control of Access — CA
- Proposed Control of Access — CA
- Existing Easement Line — E
- Proposed Temporary Construction Easement — E
- Proposed Temporary Drainage Easement — TDE
- Proposed Permanent Drainage Easement — PDE
- Proposed Permanent Utility Easement — PUE

ROADS AND RELATED FEATURES:

- Existing Edge of Pavement
- Existing Curb
- Proposed Slope Stakes Cut — C
- Proposed Slope Stakes Fill — F
- Proposed Wheel Chair Ramp — WCR
- Curb Cut for Future Wheel Chair Ramp — CCFR
- Existing Metal Guardrail
- Proposed Guardrail
- Existing Cable Guiderail
- Proposed Cable Guiderail
- Equaility Symbol
- Pavement Removal

VEGETATION:

- Single Tree
- Single Shrub
- Hedge
- Woods Line
- Orchard
- Vineyard — Vineyard

EXISTING STRUCTURES:

MAJOR:

- Bridge, Tunnel or Box Culvert — CONC
- Bridge Wing Wall, Head Wall and End Wall — CONC WW

MINOR:

- Head and End Wall — CONC HW
- Pipe Culvert
- Footbridge
- Drainage Box: Catch Basin, DI or JB — CB
- Paved Ditch Gutter
- Storm Sewer Manhole — S
- Storm Sewer — S

UTILITIES:

POWER:

- Existing Power Pole
- Proposed Power Pole
- Existing Joint Use Pole
- Proposed Joint Use Pole
- Power Manhole — P
- Power Line Tower
- Power Transformer
- U/G Power Cable Hand Hole — HH
- H-Frame Pole
- Recorded U/G Power Line — P
- Designated U/G Power Line (S.U.E.*) — P

TELEPHONE:

- Existing Telephone Pole
- Proposed Telephone Pole
- Telephone Manhole — T
- Telephone Booth
- Telephone Pedestal — T
- Telephone Cell Tower
- U/G Telephone Cable Hand Hole — HH
- Recorded U/G Telephone Cable — T
- Designated U/G Telephone Cable (S.U.E.*) — T
- Recorded U/G Telephone Conduit — TC
- Designated U/G Telephone Conduit (S.U.E.*) — TC
- Recorded U/G Fiber Optics Cable — T FO
- Designated U/G Fiber Optics Cable (S.U.E.*) — T FO

WATER:

- Water Manhole — W
- Water Meter
- Water Valve
- Water Hydrant
- Recorded U/G Water Line — W
- Designated U/G Water Line (S.U.E.*) — W
- Above Ground Water Line — A/G Water

TV:

- TV Satellite Dish
- TV Pedestal — C
- TV Tower
- U/G TV Cable Hand Hole — HH
- Recorded U/G TV Cable — TV
- Designated U/G TV Cable (S.U.E.*) — TV
- Recorded U/G Fiber Optic Cable — TV FO
- Designated U/G Fiber Optic Cable (S.U.E.*) — TV FO

GAS:

- Gas Valve
- Gas Meter
- Recorded U/G Gas Line — G
- Designated U/G Gas Line (S.U.E.*) — G
- Above Ground Gas Line — A/G Gas

SANITARY SEWER:

- Sanitary Sewer Manhole
- Sanitary Sewer Cleanout
- U/G Sanitary Sewer Line — SS
- Above Ground Sanitary Sewer — A/G Sanitary Sewer
- Recorded SS Forced Main Line — FSS
- Designated SS Forced Main Line (S.U.E.*) — FSS

MISCELLANEOUS:

- Utility Pole
- Utility Pole with Base
- Utility Located Object
- Utility Traffic Signal Box — S
- Utility Unknown U/G Line — ?UTL
- U/G Tank; Water, Gas, Oil
- A/G Tank; Water, Gas, Oil
- U/G Test Hole (S.U.E.*)
- Abandoned According to Utility Records — AATUR
- End of Information — E.O.I.

PROJECT REFERENCE NO.	SHEET NO.
17BPJ4.R.73	1-C
R/W SHEET NO.	

Prepared in the Office of:

Mattern & Craig
CONSULTING ENGINEERS - SURVEYORS
12 BROAD STREET
ASHEVILLE, NORTH CAROLINA 28801
(828) 254-2201 - FAX (828) 254-4562

SURVEY CONTROL SHEET 17BP.14.R.73

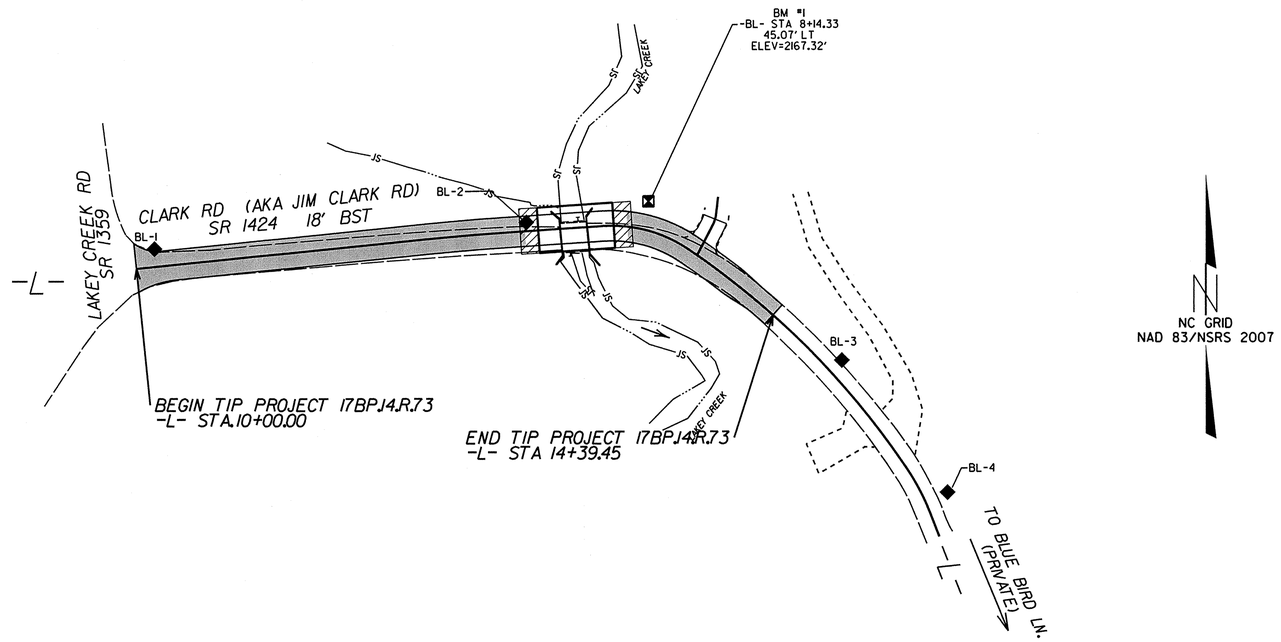

BL

POINT	DESC.	NORTH	EAST	ELEVATION	EL STATION	OFFSET
1	BL-1	593122.4831	675222.1270	2173.27	10+12.85	12.10 LT
2	BL-2	593139.8630	675467.5350	2161.24	12+58.39	11.22 LT
3	BL-3	593048.5820	675675.7859	2183.88	14+88.33	10.56 LT
4	BL-4	592961.1621	675745.4730	2186.97	15+96.19	16.23 LT

BM1 ELEVATION = 2167.32
N 593154 E 675548
BL STATION 8+14.33 45.07 LEFT
RR SPIKE IN 20" POPLAR TREE

DATUM DESCRIPTION

THE LOCALIZED COORDINATE SYSTEM DEVELOPED FOR THIS PROJECT IS BASED ON THE STATE PLANE COORDINATES ESTABLISHED BY NCGS FOR MONUMENT "550321 BL-2"
WITH NAD 83/NSRS 2007 STATE PLANE GRID COORDINATES OF
NORTHING: 593139.8630(ft) EASTING: 675467.5350(ft)
ELEVATION: 2161.24(ft)
THE AVERAGE COMBINED GRID FACTOR USED ON THIS PROJECT (GROUND TO GRID) IS: 0.999773717
THE N.C. LAMBERT GRID BEARING AND LOCALIZED HORIZONTAL GROUND DISTANCE FROM "550321 BL-2" TO -L- STATION 10+00 IS
S83°14'17"W 259.0168'
ALL LINEAR DIMENSIONS ARE LOCALIZED HORIZONTAL DISTANCES
VERTICAL DATUM USED IS NAVD 88

Scale 1" = 50'
50' 0 50' 100'

STRUCTURE: 55-0321
COUNTY: MACON

5/14/99

\3215\Bridge\Roadway\Proj\17BP14R73_LS_PSH.dgn
10:38:17 AM

PROJECT REFERENCE NO.	SHEET NO.
17BP.14.R.73	2

ROADWAY DESIGN ENGINEER

PAVEMENT DESIGN ENGINEER

PLANS PREPARED BY:

Mattern & Craig
CONSULTING ENGINEERS - SURVEYORS
12 BROAD STREET
ASHEVILLE, NORTH CAROLINA 28801
(828) 254-2201 - FAX (828) 254-4562

PAVEMENT SCHEDULE

ITEM	DESCRIPTION	ITEM	DESCRIPTION
C1	PROP. APPROX. 3" ASPHALT CONCRETE SURFACE COURSE, TYPE S9.5B, AT AN AVERAGE RATE OF 168 LBS. PER SQ. YD. IN EACH OF 2 LAYERS.	J1	PROP. 8" AGGREGATE BASE COURSE
C2	PROP. APPROX. 3¾" ASPHALT CONCRETE SURFACE COURSE, TYPE S9.5B, AT AN AVERAGE RATE OF 210 LBS. PER SQ. YD. IN EACH OF 2 LAYERS.	T	EARTH MATERIAL.
E1	PROP. APPROX. 5" ASPHALT CONCRETE BASE COURSE, TYPE B25.0B, AT AN AVERAGE RATE OF 570 LBS. PER SQ. YD.		

NOTE: ALL PAVEMENT EDGE SLOPES ARE TO BE 1:1

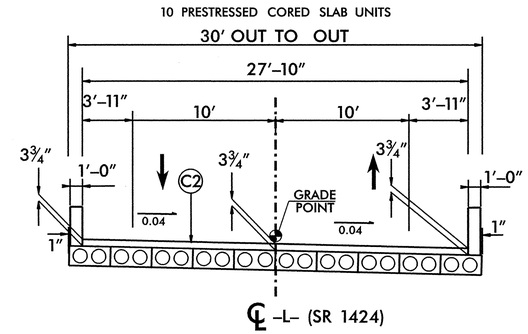

TYPICAL SECTION ON BRIDGE

-L- STA. 12+65.22 (BEGIN BRIDGE) TO 13+17.48 (END BRIDGE)

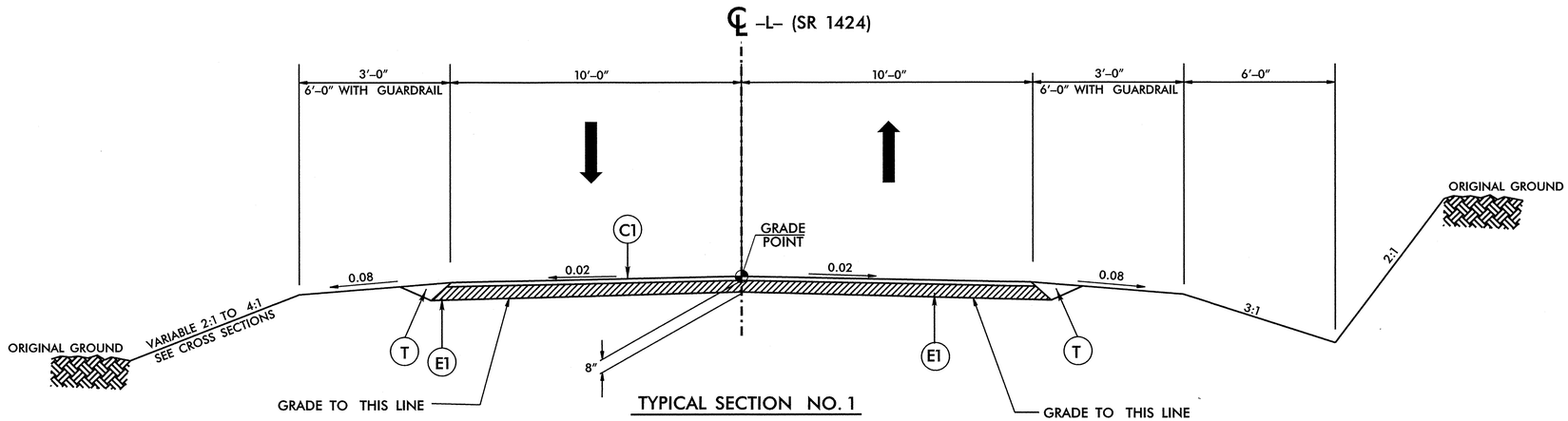

TYPICAL SECTION NO. 1

USE TYPICAL SECTION No. 1

-L- STA. 10+00.00 TO STA 12+65.22 (Begin of Bridge)
-L- STA. 13+17.48 (End of Bridge) TO STA. 13+89.45
TRANSITION FROM TYPICAL SECTION No. 1 TO EXISTING:
-L- STA. 13+89.45 TO STA 14+39.45

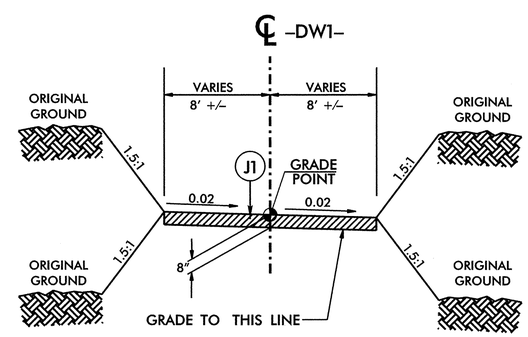

TYPICAL DRIVEWAY SECTION

-DW1- STA. 10+10.00 TO STA. 10+25.00

6/2/99
10:37:35 AM
B:3325 Bridge321\Roadway\Proj\17BP14R73_RDY_TYP.dgn
BDEGES
I:/2367/DGN/B4155_RDY_TYP.DGN

PROJECT REFERENCE NO.	SHEET NO.
17BP14.R.32	3

PLANS PREPARED BY:

Mattern & Craig
CONSULTING ENGINEERS - SURVEYORS
12 BROAD STREET
ASHEVILLE, NORTH CAROLINA 28801
(828) 254-2201 - FAX (828) 254-4562

SUMMARY OF QUANTITIES

TYPE	ITEM NUMBER	Sec No.	Description	Quantity	Unit
M	0000100000-N	800	MOBILIZATION	1	LS
M	0000400000-N	801	CONSTRUCTION SURVEYING	1	LS
G	0030000000-N	SP	BRIDGE APPROACH FILL - SUBREGIONAL TIER AT STATION	1	LS
G	0043000000-N	226	GRADING	1	LS
G	0050000000-E	226	SUPPLEMENTARY CLEARING & GRUBBING	0.5	ACR
G	0057000000-E	226	UNDERCUT EXCAVATION	50	CY
D	0134000000-E	240	DRAINAGE DITCH EXCAVATION	387	CY
G	0195000000-E	265	SELECT GRANULAR MATERIAL	50	CY
M	0199000000-E	SP	TEMPORARY SHORING	525	SF
D	0318000000-E	300	FOUNDATION CONDITIONING MATERIAL,MINOR STRUCTURES	15	TON
D	0320000000-E	300	FOUNDATION CONDITIONING GEOTEXTILE	100	SY
D	0335300000-E	305	18" DRAINAGE PIPE	92	LF
G	0995000000-E	340	PIPE REMOVAL	65	LF
P	1121000000-E	520	AGGREGATE BASE COURSE	20	TON
G	1220000000-E	545	INCIDENTAL STONE BASE	50	TON
P	1489000000-E	610	ASPHALT CONC BASE COURSE, TYPE B25.0B	256	TON
P	1519000000-E	610	ASPHALT CONC SURFACE COURSE, TYPE S9.5B	220	TON
P	1575000000-E	620	ASPHALT BINDER FOR PLANT MIX	25	TON
D	2286000000-N	840	MASONRY DRAINAGE STRUCTURES	2	EA
D	2364000000-N	840	FRAME WITH TWO GRATES, STD 840.16	1	EA
D	2366000000-N	840	FRAME WITH TWO GRATES, STD 840.24	1	EA
P	2556000000-E	846	SHOULDER BERM GUTTER	53	LF
GR	3030000000-E	862	STEEL BM GUARDRAIL	12.5	LF
GR	3045000000-E	862	STEEL BM GUARDRAIL, SHOP CURVED	12.5	LF
GR	3150000000-N	862	ADDITIONAL GUARDRAIL POSTS	10	EA
GR	3165000000-N	SP	GUARDRAIL ANCHOR UNITS, TYPE 350 (TL-2)	4	EA
GR	3215000000-N	862	GUARDRAIL ANCHOR UNITS, TYPE III	4	EA
R	3569000000-E	867	BARBED WIRE FENCE RESET	280	LF
D	3656000000-E	876	GEOTEXTILE FOR DRAINAGE	25	SY
S	4025000000-E	901	CONTRACTOR FURNISHED, TYPE E SIGN	16	SF
S	4072000000-E	903	SUPPORTS, 3-LB STEEL U-CHANNEL	10	LF
S	4102000000-N	904	SIGN ERECTION, TYPE E	1	EA
Y	4405000000-E	1110	WORK ZONE SIGNS (PORTABLE)	174	SF
Y	4410000000-E	1110	WORK ZONE SIGNS (BARRICADE MOUNTED)	30	SF
Y	4430000000-N	1130	DRUMS	20	EA
Y	4445000000-E	1145	BARRICADES (TYPE III)	24	LF
Y	4455000000-N	1150	FLAGGER	2	DAY
Y	4465000000-N	1160	TEMPORARY CRASH CUSHIONS	2	EA
Y	4470000000-N	1160	RESET TEMPORARY CRASH CUSHION	2	EA
Y	4485000000-E	1170	PORTABLE CONCRETE BARRIER	200	LF
Y	4500000000-E	1170	RESET PORTABLE CONCRETE BARRIER	200	LF
PM	4810000000-E	1205	PAINT PAVEMENT MARKING LINES (4")	4160	LF
PM	4835000000-E	1205	PAINT PAVEMENT MARKING LINES (24")	70	LF
PM	4850000000-E	1205	REMOVAL OF PAVEMENT MARKING LINES (4")	600	LF
PM	4870000000-E	1205	REMOVAL OF PAVEMENT MARKING LINES (24")	40	LF
L	6000000000-E	1605	TEMPORARY SILT FENCE	1845	LF
L	6009000000-E	1610	EROSION CONTROL STONE, CLASS B	130	TON
L	6012000000-E	1610	SEDIMENT CONTROL STONE	75	TON
L	6015000000-E	1615	TEMPORARY MULCHING	0.5	ACR
L	6018000000-E	1620	SEED FOR TEMPORARY SEEDING	50	LB
L	6021000000-E	1620	FERTILIZER FOR TEMPORARY SEEDING	0.25	TON
L	6024000000-E	1622	TEMPORARY SLOPE DRAINS	200	LF
L	6029000000-E	SP	SAFETY FENCE	100	LF
L	6030000000-E	1630	SILT EXCAVATION	160	CY
L	6036000000-E	1631	MATTING FOR EROSION CONTROL:	2700	SY
L	6042000000-E	1632	1/4" HARDWARE CLOTH	205	LF
L	6051000000-E	SP	WILDFLOWER SEEDING & MULCHING	0.02	ACR
L	6070000000-N	1639	SPECIAL STILLING BASINS	2	EA
L	6071020000-E	SP	POLYACRYLAMIDE (PAM)	15	LB
L	6084000000-E	1660	SEEDING AND MULCHING	0.5	ACR
L	6090000000-E	1661	SEED FOR REPAIR SEEDING	50	LB
L	6093000000-E	1661	FERTILIZER FOR REPAIR SEEDING	0.25	TON
L	6096000000-E	1662	SEED FOR SUPPLEMENTAL SEEDING	50	LB
L	6108000000-E	1665	FERTILIZER TOPDRESSING	0.5	TON
L	6117000000-N	SP	RESPONSE FOR EROSION CONTROL	7	EA
L	6118000000-N	SP	ROOTWADS	13	EA
L	6126000000-E	SP	STREAMBANK REFORESTATION	0.05	ACR
L	6132000000-N	SP	GENERIC EROSION CONTROL ITEM - STREAM PLUG	3	EA
L	6132000000-N	SP	CONSTRUCTUED RIFFLE	3	EA
Z	7980000000-N	SP	PORTABLE TRAFFIC SYSTEM (PRE-TIMED)	1	EA
B	8035000000-N	402	REMOVAL OF EXISTING STRUCTURE AT	1	LS
B	8121000000-N	412	UNCLASSIFIED STRUCTURE EXCAVATION AT	1	LS
B	8182000000-E	420	CL A CONC (BRG)	40	CY
B	8210000000-N	422	BRIDGE APPROACH SLABS	1	LS
B	8217000000-E	425	REINFORCING STEEL (BRIDGE)	4852	LBS
B	8364000000-E	450	HP12X53 STL PILES	430	LF
B	8391000000-N	450	STL PILE POINTS	10	EA
B	8505000000-E	460	VERTICAL CONC BARRIER RAIL	100.25	LF
B	8608000000-E	876	RIP RAP CLASS II (2'-0" THICK)	147	Tons
B	8622000000-E	876	GEOTEXTILE FOR DRAINAGE	164	SY
B	8657000000-N	430	ELASTOMERIC BEARINGS	1	LS
B	8881000000-E	430	3'-0" X 1'-9" PRESTRESSED CONCRETE CORED SLABS	500	LF

6/2/99
9:46:58 AM
8:\32\Bridge321\Roadway\Proj\17BP14R73_RDY_TYP.dgn
hpcass

COMPUTED BY:	BGR	DATE:	6-16-14
CHECKED BY:	JBV	DATE:	6-16-14

PROJECT REFERENCE NO.	SHEET NO.
17BP.14.R.32	3-A

STATE OF NORTH CAROLINA
DIVISION OF HIGHWAYS

"N" = DISTANCE FROM EDGE OF LANE TO FACE OF GUARDRAIL.
TOTAL SHOULDER WIDTH = DISTANCE FROM EDGE OF TRAVEL LANE TO SHOULDER BREAK POINT.
FLARE LENGTH = DISTANCE FROM LAST SECTION OF PARALLEL GUARDRAIL TO END OF GUARDRAIL.
W = TOTAL WIDTH OF FLARE FROM BEGINNING OF TAPER TO END OF GUARDRAIL.
G = GATING IMPACT ATTENUATOR TYPE 350
NG = NON-GATING IMPACT ATTENUATOR TYPE 350

GUARDRAIL SUMMARY

SURVEY LINE	BEG. STA.	END STA.	LOCATION	LENGTH STRAIGHT	LENGTH SHOP CURVED	LENGTH DOUBLE FACED	WARRANT POINT APPROACH END	WARRANT POINT TRAILING END	"N" DIST. FROM E.O.L.	TOTAL SHOUL. WIDTH	FLARE LENGTH APPROACH END	FLARE LENGTH TRAILING END	W APPROACH END	W TRAILING END	ANCHORS XI MOD	ANCHORS XI	ANCHORS GRAU 350 TYPE TL-2	ANCHORS M-350	ANCHORS TYPE III	ANCHORS CAT-1	ANCHORS VI MOD	ANCHORS BIC	ANCHORS AT-1	IMPACT ATTENUATOR TYPE 350 EA	IMPACT ATTENUATOR TYPE 350 G	IMPACT ATTENUATOR TYPE 350 NG	SINGLE FACED GUARDRAIL	REMOVE EXISTING GUARDRAIL	REMOVE AND STOCKPILE EXISTING GUARDRAIL	REMARKS
–L–	12+15.22	12+65.22	LT	50.00				BRIDGE	2.42	6		31.25		0.625			1		1											
–L–	12+15.22	12+65.22	RT	50.00			BRIDGE		2.42	6	31.25		0.625				1		1											
–L–	13+17.48	13+67.48	LT		50.00		BRIDGE		2.42	6	31.25		0.625				1		1											
–L–	13+17.48	13+67.48	RT		50.00			BRIDGE	2.42	6		31.25		3.05			1		1											
			TOTAL	100	100												4		4											
		DEDUCT ANCHORS	TYPE III – 18.75	–37.5	–37.5																									
			GRAU 350 TYPE TL–2 – 25.00	–50	–50																									
			TOTAL	12.5	12.5																									
ADDITIONAL GUARDRAIL POSTS = 10			SAY	12.5	12.5												4		4											

LIST OF PIPES, ENDWALLS, ETC. (FOR PIPES 48" & UNDER)

STATION / SIZE / THICKNESS OR GAUGE	LOCATION (LT,RT, OR CL)	STRUCTURE NO. FROM	STRUCTURE NO. TO	TOP ELEVATION	INVERT ELEVATION	INVERT ELEVATION	SLOPE CRITICAL
–L– 12+70.00	LT						
–L– 13+10.00	LT						
–L– 13+72.86	LT				1270.00	2170.78	
–L– 13+75.00	LT						
–L– 13+86.43	LT			2173.45	2170.78		
–L– 14+15.61	LT				2170.78	2175.60	
–L– 14+44.78	LT			2178.27	2175.60		

STATION	DRAINAGE PIPE (RCP, CSP, CAAP, HDPE, or PVC) 12"	15"	18"	24"	30"	36"	42"	48"	C.S. PIPE (UNLESS NOTED OTHRWISE) 12" .064	15" .064	18" .064	24" .064	24"	30" .079	30"	36" .079	36"	42" .109	42"	48" .109	48"
–L– 12+70.00																					
–L– 13+10.00																					
–L– 13+72.86																					
–L– 13+75.00																					
–L– 13+86.43																					
–L– 14+15.61																					
–L– 14+44.78																					

STATION	CLASS III R.C. PIPE (UNLESS OTHERWISE NOTED) 12"	15"	18"	24"	30"	36"	42"	48"	15" SIDE DRAIN PIPE	18" SIDE DRAIN PIPE	24" SIDE DRAIN PIPE	ENDWALLS STD. 838.01, STD. 838.11 OR STD. 838.80 (UNLESS NOTED OTHERWISE) CU. YDS. R.C.P.	C.S.P.	QUANTITIES FOR DRAINAGE STRUCTURES * TOTAL L.F. FOR PAY QUANTITY SHALL BE COL. 'A' + (1.3 X COL.'B') PER EACH (0' THRU 5.0')	LIN. *FT. A 5.0' THRU 10.0'	B 10.0' AND ABOVE	C.B. STD. 840.01 OR STD. 840.02
–L– 12+70.00																	
–L– 13+10.00																	
–L– 13+72.86			32														
–L– 13+75.00																	
–L– 13+86.43																	
–L– 14+15.61			60														
–L– 14+44.78																	

STATION	FRAME, GRATES AND HOOD STANDARD 840.03 TYPE OF GRATE E	F	G		D.I. STD. 840.14 OR STD. 840.15	D.I. FRAME & GRATE STD. 840.16	G.D.I. TYPE "A" STD. 840.17 OR 840.26	G.D.I. TYPE "B" STD. 840.18 OR 840.27	G.D.I. TYPE "D" STD. 840.19 OR 840.28	G.D.I. FRAME WITH GRATE STD. 840.22	G.D.I. FRAME WITH TWO GRATES STD. 840.22	G.D.I. (N.S.) FRAME WITH GRATE STD. 840.24	G.D.I. (N.S.) FRAME WITH TWO GRATES STD. 840.24	J.B. STD. 840.31 OR 840.32	T.B.D.I STD. 840.35 OR 840.45
–L– 12+70.00															
–L– 13+10.00															
–L– 13+72.86															
–L– 13+75.00															
–L– 13+86.43					1	1									
–L– 14+15.61															
–L– 14+44.78													1		1

STATION							CORR. STEEL ELBOWS NO. & SIZE	CONC. COLLARS CL. "B" C.Y. STD 840.72	CONC. & BRICK PIPE PLUG, C.Y. STD. 840.71	PIPE REMOVAL LIN.FT.	REMARKS
–L– 12+70.00										10.0	REMOVE EXISTING DRIVE PIPE
–L– 13+10.00										15.0	REMOVE EXISTING DRIVE PIPE
–L– 13+72.86											
–L– 13+75.00										40.0	REMOVE EXISTING DRIVE PIPE
–L– 13+86.43											
–L– 14+15.61											
–L– 14+44.78											

ABBREVIATIONS

C.B.	CATCH BASIN
N.D.I.	NARROW DROP INLET
D.I.	DROP INLET
G.D.I.	GRATED DROP INLET
G.D.I. (N.S.)	GRATED DROP INLET (NARROW SLOT)
J.B.	JUNCTION BOX
M.H.	MANHOLE
T.B.D.I.	TRAFFIC BEARING DROP INLET
T.B.J.B.	TRAFFIC BEARING JUNCTION BOX

Note: Invert elevations are for bid purposes only. Contractor to field verify all existing and proposed elevations

PAVEMENT REMOVAL SUMMARY

SURVEY LINE	STATION	STATION	LOCATION LT/RT/CL	YD²
–L–	10+00	14+39.45	CL	878.9
			TOTAL:	878.9
			SAY:	900

6/21/00

COMPUTED BY: BGR DATE: 6-16-14
CHECKED BY: JBV DATE: 6-16-14

PROJECT REFERENCE NO.	SHEET NO.
17BP.14.R.32	3-B

STATE OF NORTH CAROLINA
DIVISION OF HIGHWAYS

Approximate quantities only. Unclassified excavation, borrow excavation, shoulder borrow, fine grading, clearing and grubbing, breaking of existing pavement and removal of existing pavement will be paid for at the lump sum price for "Grading".

SUMMARY OF EARTHWORK
IN CUBIC YARDS

STREAM RELOCATION

LOCATION	UNCLASSIFIED EXCAVATION	UNDERCUT	EMBT+%	BORROW	WASTE
-L- 10+00 TO 10+50	51		8	0	43
-L- 10+50 TO 11+00	31		1	9	30
TOTALS	82		329	9	73
EARTH WASTE TO REPLACE BORROW				-9	-9
GRAND TOTAL	82				64
SAY	100				75

PHASE I - ROADWAY

LOCATION	UNCLASSIFIED EXCAVATION	UNDERCUT	EMBT+%	BORROW	WASTE
-L- 10+00 TO 10+50	8		22	14	0
-L- 10+50 TO 11+00	13		22	9	0
-L- 11+00 TO 11+50	28		0	0	28
-L- 11+50 TO 12+00	18		3	0	15
-L- 12+00 TO 12+50	21		105	84	0
-L- 12+50 TO 13+00	19		110	91	0
-L- 13+00 TO 13+50	4		26	22	0
-L- 13+50 TO 14+00	12		30	18	0
-L- 14+00 TO 14+39.45	8		11	2	0
TOTALS	131		329	240	43
EARTH WASTE TO REPLACE BORROW				-43	-43
GRAND TOTAL	131			197	
SAY	150			200	

PHASE II - ROADWAY

LOCATION	UNCLASSIFIED EXCAVATION	UNDERCUT	EMBT+%	BORROW	WASTE
-L- 10+00 TO 10+50	9		68	59	0
-L- 10+50 TO 11+00	8		68	60	0
-L- 11+00 TO 11+50	24		0	0	24
-L- 11+50 TO 12+00	20		2	0	18
-L- 12+00 TO 12+50	4		55	51	0
-L- 12+50 TO 13+00	18		53	35	0
-L- 13+00 TO 13+50	18		28	10	0
-L- 13+50 TO 14+00	8		28	20	0
-L- 14+00 TO 14+39.45	8		0	0	8
TOTALS	117		302	235	50
EARTH WASTE TO REPLACE BORROW				-50	-50
GRAND TOTAL	117			185	
SAY	125			200	

CONTINGENCY ITEMS

ESTIMATED:		
UNDERCUT EXCAVATION	=	50
SELECT GRANULAR MATIERIAL	=	50
INCIDENTAL STONE BASE	=	50

PROJECT REFERENCE NO.	SHEET NO.
17BPJ4.R.73	4
R/W SHEET NO.	
ROADWAY DESIGN ENGINEER	HYDRAULICS ENGINEER

NORTH CAROLINA PROFESSIONAL ENGINEER SEAL 022269 JAMES B. VOSO

NORTH CAROLINA PROFESSIONAL ENGINEER SEAL 028945 DANA J. BOLDEN

Prepared in the Office of:

Mattern & Craig
CONSULTING ENGINEERS - SURVEYORS
12 BROAD STREET
ASHEVILLE, NORTH CAROLINA 28801
(828) 254-2201 - FAX (828) 254-4562

50 25 0 50 100
SCALE

NAD 83/ NSRS 2007

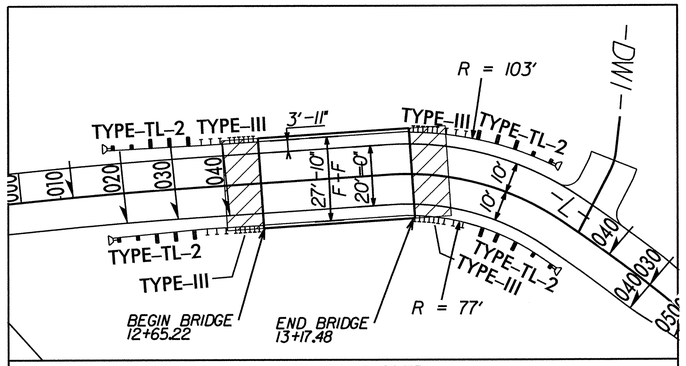

SKETCH SHOWING THE RELATIONSHIP OF THE BRIDGE TO THE PAVEMENT

25 0 25 50

-L-

PI Sta 12+19.08 Δ = 2° 01' 23.9" (RT) D = 3° 49' 11.0" L = 52.97' T = 26.49' R = 1,500.00' SE = 0.04 V = 60 MPH	PI Sta 13+40.08 Δ = 38° 02' 45.8" (RT) D = 63° 39' 43.1" L = 59.76' T = 31.03' R = 90.00' SE = 0.04 V = 20 MPH
PI Sta 14+71.25 Δ = 21° 33' 50.6" (RT) D = 10° 39' 08.1" L = 202.44' T = 102.43' R = 537.88'	PI Sta 15+91.35 Δ = 13° 16' 37.1" (RT) D = 38° 11' 49.9" L = 34.76' T = 17.46' R = 150.00'

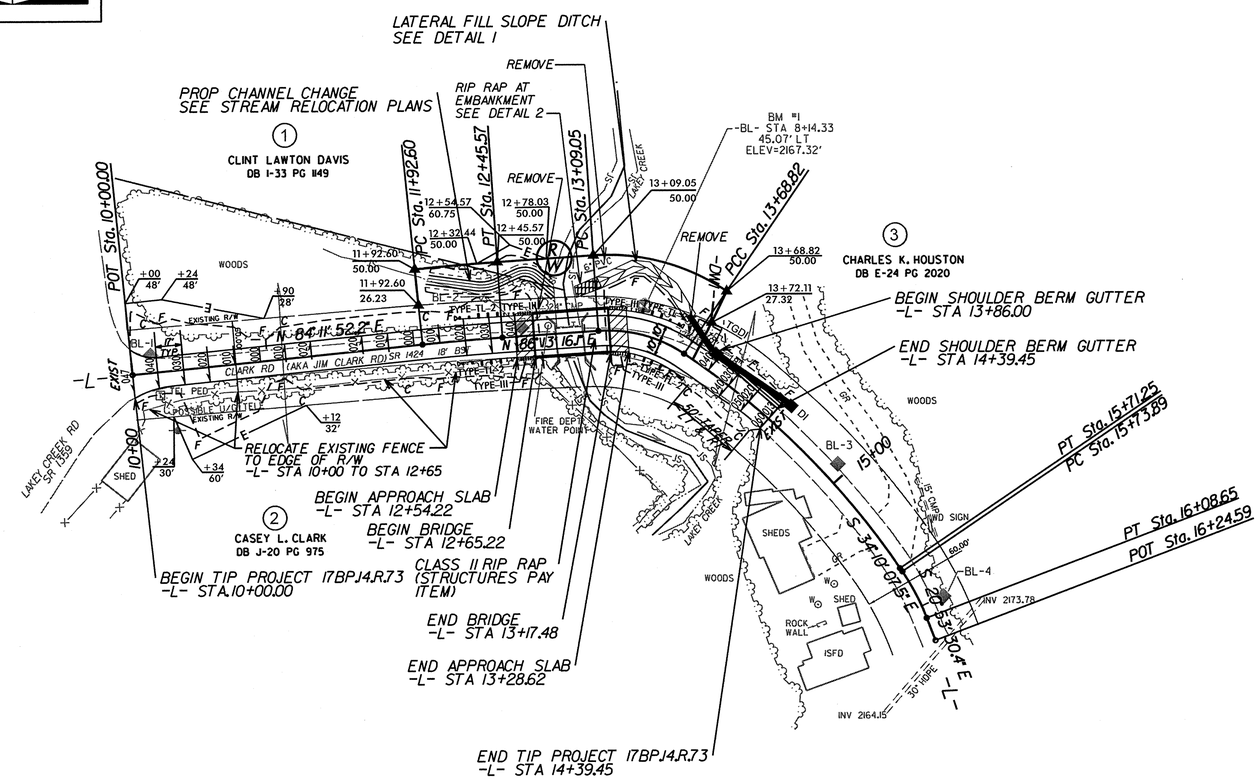

DETAIL 1

LATERAL FILL SLOPE 'V' DITCH

(Not to Scale)

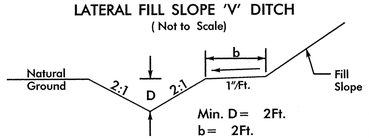

FROM -L- STA. 13+10 TO STA. 13+60 LT

DETAIL 2

RIP RAP AT EMBANKMENT

(Not to Scale)

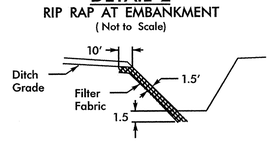

Type of Liner= Filter Fabric & Class I Rip-Rap

5/14/99

10:33:21 AM
\3215\Bridge32\Roadway\Proj\17BP14R73_RDY_PSH.dgn
Bridge

PROJECT REFERENCE NO.	SHEET NO.
17BP.14.R.73	5

ROADWAY DESIGN ENGINEER

NORTH CAROLINA PROFESSIONAL SEAL 027259 ENGINEER JAMES B. VOSO

HYDRAULICS ENGINEER

NORTH CAROLINA PROFESSIONAL SEAL 028945 ENGINEER DANA J. BOLDEN

Prepared in the Office of:

Mattern & Craig
CONSULTING ENGINEERS - SURVEYORS
12 BROAD STREET
ASHEVILLE, NORTH CAROLINA 28801
(828) 254-2201 - FAX (828) 254-4562

50 25 0 50 100
PROFILE (HORIZONTAL)
10 5 0 10 20
PROFILE (VERTICAL)
SCALE

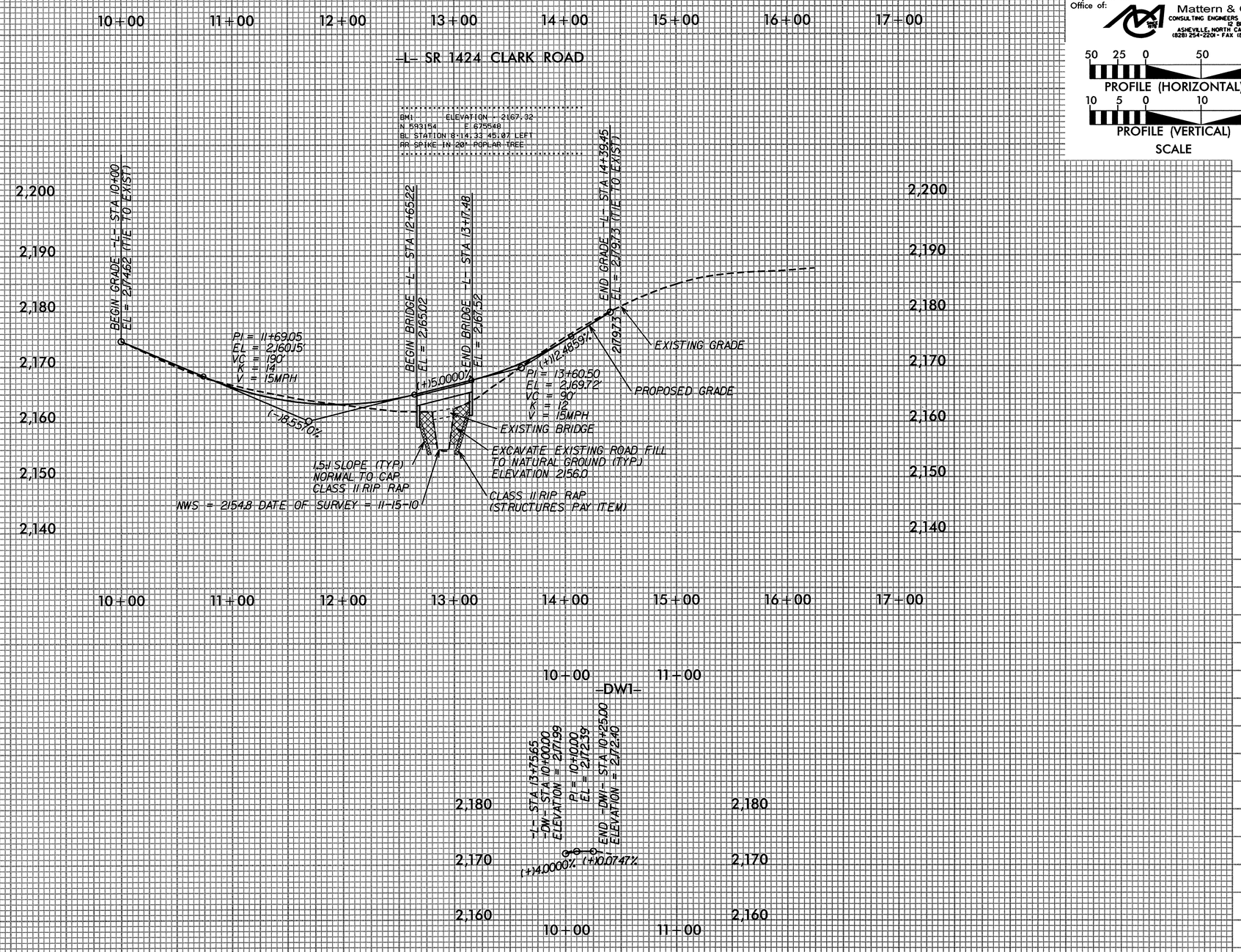

BRIDGE HYDRAULIC DATA

DESIGN DISCHARGE	=	600	CFS
DESIGN FREQUENCY	=	25	YRS
DESIGN HW ELEVATION	=	2159.6	FT
BASE DISCHARGE	=	900	CFS
BASE FREQUENCY	=	100	YRS
BASE HW ELEVATION	=	2160.92	FT
OVERTOPPING DISCHARGE	=	1450	CFS
OVERTOPPING FREQUENCY	=	500+	YRS
OVERTOPPING ELEVATION	=	2163.1	FT
DATE OF SURVEY	=	11-15-10	
W.S.ELEVATION AT DATE OF SURVEY	=	2154.8	FT

5/14/99

10:39:44 AM
R:\3321 Bridge321\Roadway\Proj\17BP14R73_RDY_PSH.dgn
bpcrass

8/17/99

REVISIONS

PROJECT REFERENCE NO.	SHEET NO.
17BP.14.R.73	REU-1
R/W SHEET NO.	
ROADWAY DESIGN ENGINEER	HYDRAULICS ENGINEER

NORTH CAROLINA PROFESSIONAL SEAL 022259 ENGINEER JAMES B. VOSO

SEAL 028945 ENGINEER DANA J. BOLDEN

10 5 0 10 20
PLAN

BM1 ELEVATION = 2167.32
N 593154 E 675548
BL STATION 8+14.33 45.07 LEFT
RR SPIKE IN 20" POPLAR TREE

CHANNEL

PI Sta 10+39.64	PI Sta 10+69.11
Δ = 32° 22' 21.1" (LT)	Δ = 65° 30' 30.1" (RT)
D = 229° 10' 59.2"	D = 477° 27' 53.4"
L = 141.3'	L = 137.2'
T = 7.26'	T = 7.72'
R = 25.00'	R = 12.00'

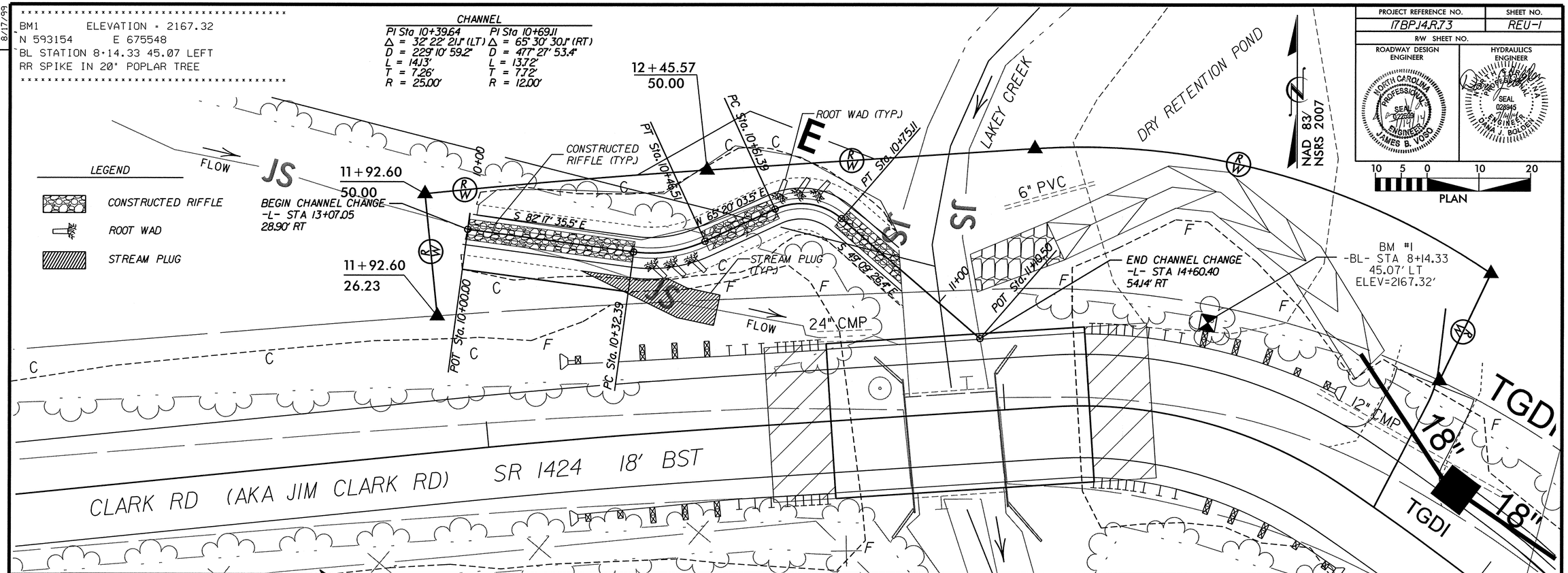

10 5 0 10 20
PROFILE (HORIZONTAL)

2 1 0 2 4
PROFILE (VERTICAL)
SCALE

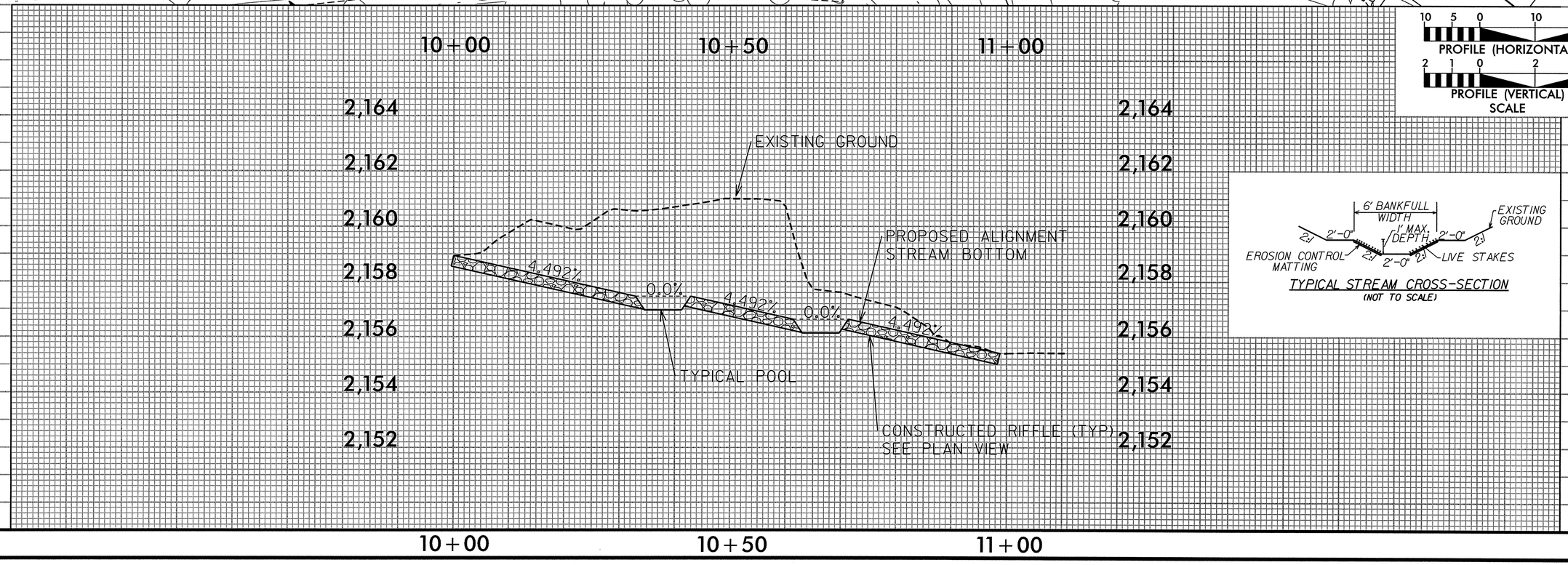

TYPICAL STREAM CROSS-SECTION
(NOT TO SCALE)

10+00 10+50 11+00

10:04:20 AM
RX3215\Bridge321\Roadway\Proj\17BP14R73_REU_PSH.dgn

PROJECT REFERENCE NO.	SHEET NO.
17BP.14.R.73	REU-2
R/W SHEET NO.	
ROADWAY DESIGN ENGINEER	HYDRAULICS ENGINEER

CHANNEL CONSTRUCTION SEQUENCE

1. CONSTRUCT THE RELOCATED STREAM SECTION IN DRY CONDITIONS.
2. INSTALL A STREAM PLUG AT THE BEGINING AND END OF THE AREA BEING BUILT IN THE DRY. THESE PLUGS WILL BE REMOVED WHEN THE NEW CHANNEL IS STABILIZED WITH MATTING.
3. PROJECT WILL BE CONSTRUCTED FROM THE DOWNSTREAM END STARTING AT THE CONFLUENCE WITH LAKEY CREEK WORKING IN THE UPSTREAM DIRECTION.
4. CONSTRUCT THE PROPOSED CHANNEL ACCORDING TO THE CONSTRUCTION PLANS. UTILIZE SPECIAL STILLING BASIN AS NECESSARY.
5. STOCKPILE AND SEPARATE ALL SOIL SUITABLE FOR FILL OR TOPSOIL.
6. INSTALL STRUCTURES (IE. CONSTRUCTED RIFFLES AND ROOT WADS).
7. SEED AREAS WITH SEED MIX AND MULCH WHERE COIR FIBER MATTING WILL BE INSTALLED.
8. INSTALL COIR FIBER MATTING.
9. PLANT VEGETATION ACCORDING TO CONSTRUCTION PLANS.
10. REMOVE THE TEMPORARY STREAM PLUGS FROM THE NEWLY CONSTRUCTED CHANNEL, AND DIVERT WATER INTO CONSTRUCTED CHANNEL.
11. INSTALL CHANNEL PLUG INTO ABANDONED CHANNEL.
12. FILL THE ABANDONED CHANNEL WITH SUITABLE MATERIAL APPROVED BY THE ENIGNEER.

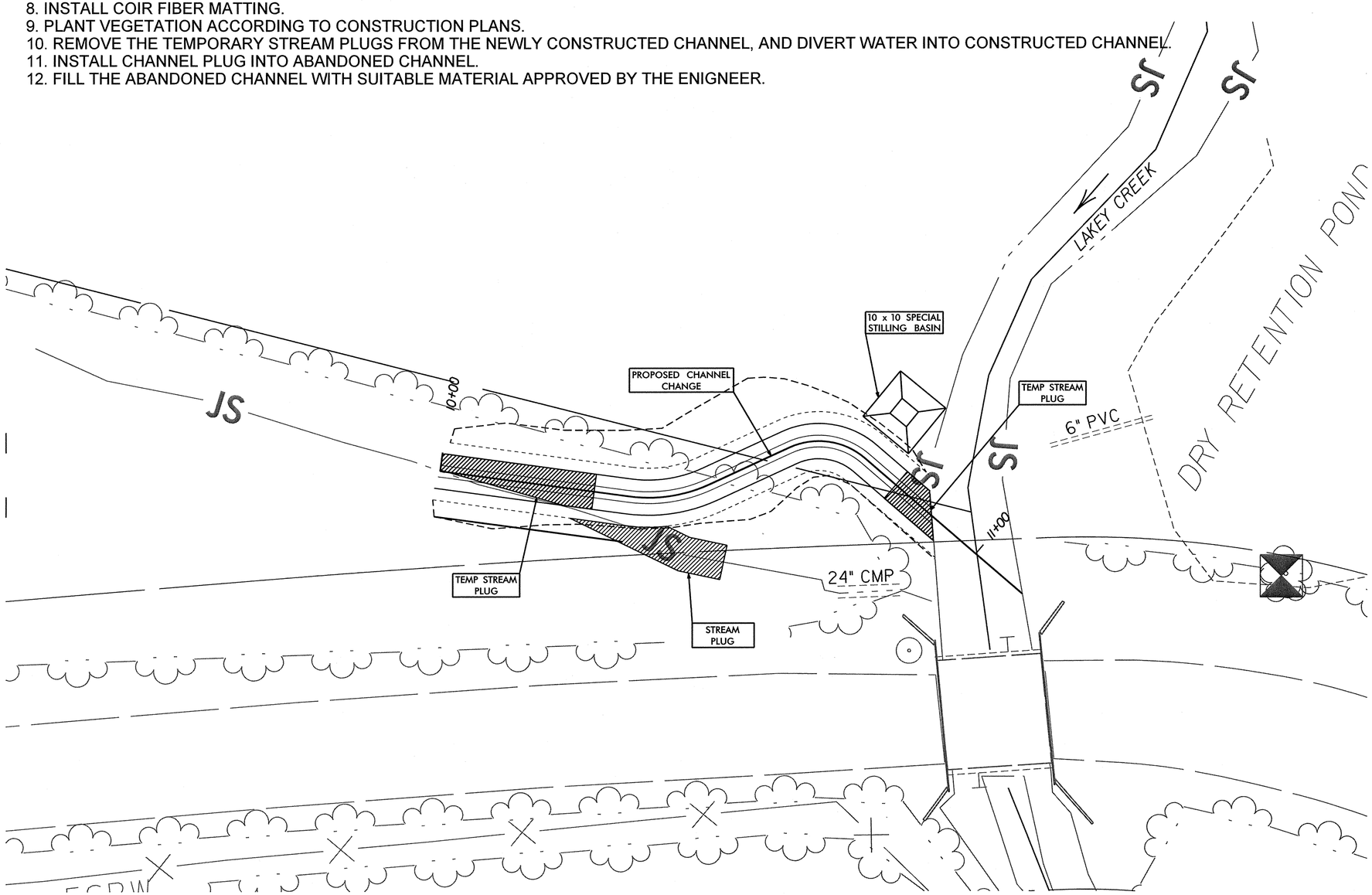

SPECIAL STILLING BASIN:

Description

This work consists of furnishing, placing, and removing special stilling basin(s) as directed. The special stilling basin shall be used to filter pumped water during construction of drilled piers, footing excavation, channel relocation, and/or culvert construction. The special stilling basin shall also be used for sediment storage at the outlet of temporary slope drain pipe(s).

Materials

Refer to Division 10

Item	Section
Filter Fabric for Drainage, Type 2	1056
Sediment Control Stone	1005

The filter fabric and sediment control stone shall be clean and shall not contain debris.

The special stilling basin shall be a water permeable fabric bag that traps sand, silt, and fines as sediment-laden water is pumped into it, or as runoff flows into it through the temporary slope drain pipe(s).

The special stilling basin shall be a bag constructed to a minimum size of 10' x 10' made from a nonwoven fabric. It shall have a sewn-in 8"
(maximum) spout for receiving pump discharge. The bag seams shall be sewn with a double needle machine using a high strength thread. The seams shall have a minimum wide width strength as follows:

Test Method	Minimum Specifications
ASTM D-4884	60 lb/in

The fabric used to construct the bag shall be stabilized to provide resistance to ultra-violet degradation and meet the following specifications for flow rates, strength, and permeability:

Property	Test Method	Minimum Specifications
Weight	ASTM D-3776	8.0 oz/yd
Grab tensile	ASTM D-4632	200.0 lb
Puncture	ASTM D-4833	130.0 lb
Flow rate	ASTM D-4491	80.0 gal/min/sf
Permittivity	ASTM D-4491	1.2 1/sec
UV Resistance	ASTM D-4355	70.0%

Construction Methods

The Contractor shall install the special stilling basin(s), filter fabric, and stone in accordance with Standard Drawing No. 1630.06 and at locations on the plans and as directed.

The special stilling basin(s) shall be constructed such that it is portable and can be used adjacent to each drilled pier, footing, stream relocation, and/or culvert. Temporary slope drain pipe(s) shall be attached to the special stilling basin(s) so that the runoff in the slope drain pipe(s) flows directly into the special stilling basin(s). The special stilling basin(s) shall be placed so the incoming water flows into and through the bag without causing erosion. The neck or spout of the bag shall be tied off tightly to stop the water from flowing out of the bag without going through the walls. If applicable, the neck or spout of the silt bag shall be cut to allow for a slope drain pipe to be inserted into the special stilling basin, and tied off tightly to stop the water from flowing out of the bag.

The special stilling basin(s) shall be replaced and disposed of when it is * full of sediment or when it is impractical for the bag to filter the sediment out at a reasonable flow rate. Prior approval from the Engineer shall be received before removal and replacement.

The Contractor shall be responsible for providing a sufficient quantity of bags to contain silt from pumped effluent during construction of drilled piers, footing excavation, and/or culvert construction. A sufficient quantity of special stilling basins shall be provided to contain sediment from temporary slope drain runoff.

The quantity of sediment control stone, filter fabric for drainage, and special stilling basin(s) as measured above will be paid for at contract price for "Lump Sum for Erosion Control". Such price and payment will be full compensation for all work covered by this provision, including but not limted to, furnishing all materials, placing and maintaining the special stilling basin(s), and removal and disposal of silt accumulations and bag.

PROJECT REFERENCE NO.	SHEET NO.
17BP14.R.73	REU-3
R/W SHEET NO.	
ROADWAY DESIGN ENGINEER	HYDRAULICS ENGINEER

NORTH CAROLINA PROFESSIONAL SEAL 029893 ENGINEER JAMES B. VOSO

NORTH CAROLINA PROFESSIONAL SEAL 028946 ENGINEER DANA J. BOLDEN

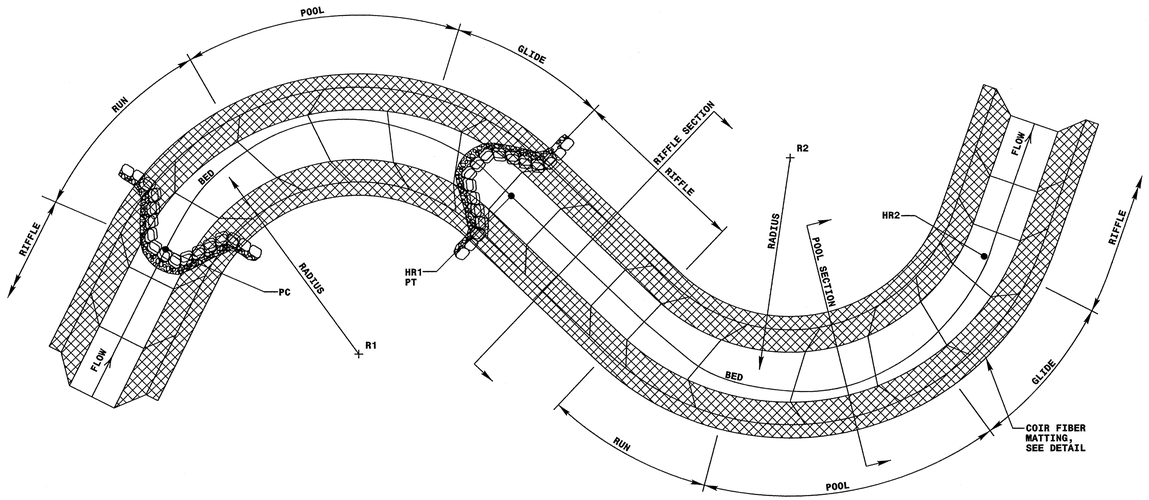

TYPICAL PLAN

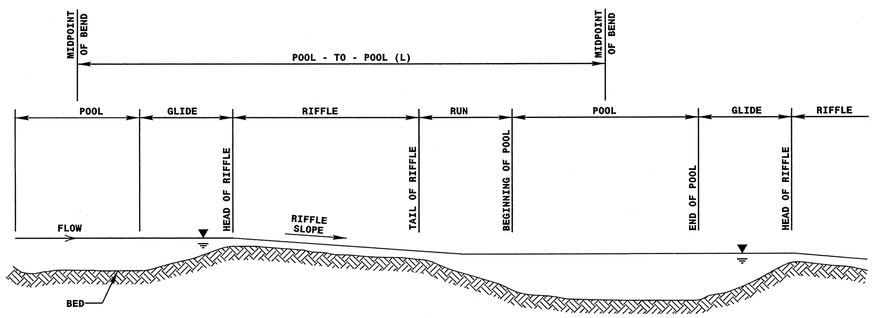

TYPICAL PROFILE

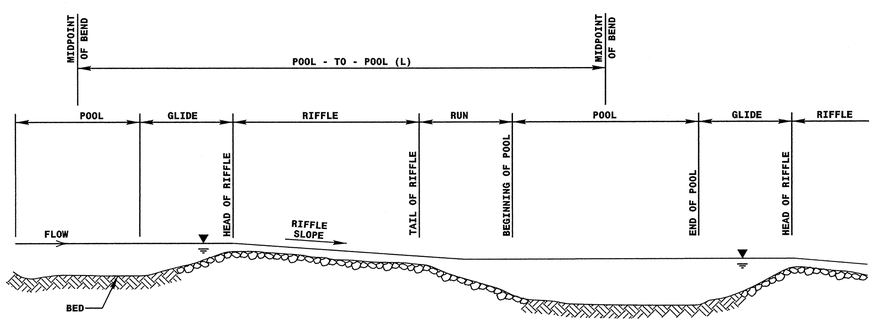

TYPICAL PROFILE FOR ARMORED RIFFLE SECTION

CHANNEL TYPICAL DETAIL

NOT TO SCALE

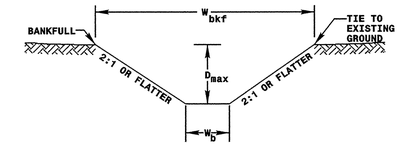

TYPICAL RIFFLE

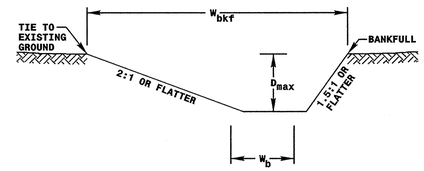

TYPICAL POOL

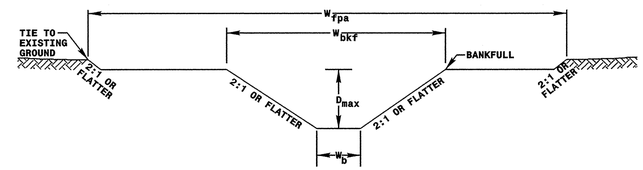

TYPICAL RIFFLE WITH BANKFULL BENCH

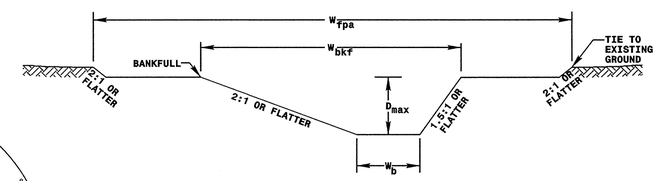

TYPICAL POOL WITH BANKFULL BENCH

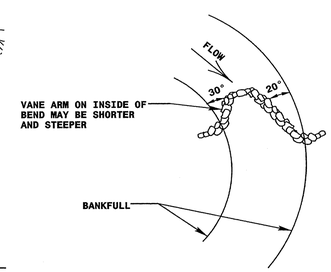

CROSS VANE CONSTRUCTION IN MEANDER-BEND PLAN VIEW

W_{bkf} = BANKFULL WIDTH
D_{max} = MAXIMUM DEPTH
W_b = BOTTOM WIDTH
W_{fpa} = FLOOD PRONE AREA WIDTH

CROSS-SECTION DIMENSIONS

REACH	RIFFLE W_{bkf}	RIFFLE D_{max}	RIFFLE W_b	RIFFLE W_{fpa}	POOL W_{bkf}	POOL D_{max}	POOL W_b	POOL W_{fpa}	Width/Depth Ratio
Sta. 10+16 - Sta. 11+78	6	1	2	20	7	1.5	2	20	9
Sta. - Sta.									
Sta. - Sta.									
Sta. - Sta.									
Sta. - Sta.									
Sta. - Sta.									
Sta. - Sta.									
Sta. - Sta.									

NOTES:
1. THE COORDINATES FOR EACH CENTER OF RADIUS (EX. "R1","R2") AND EACH HEAD OF RIFFLE (EX. "HR1", "HR2") ARE INDICATED ON THE PLAN SHEETS.

REVISIONS

8/17/99

11:05:16 AM
R:\3215\Bridge321\Roadway\Proj\17BP14R73_REU_PSH.dgn

PROJECT REFERENCE NO.	SHEET NO.
17BP.14.R.73	REU-4
R/W SHEET NO.	
ROADWAY DESIGN ENGINEER	HYDRAULICS ENGINEER

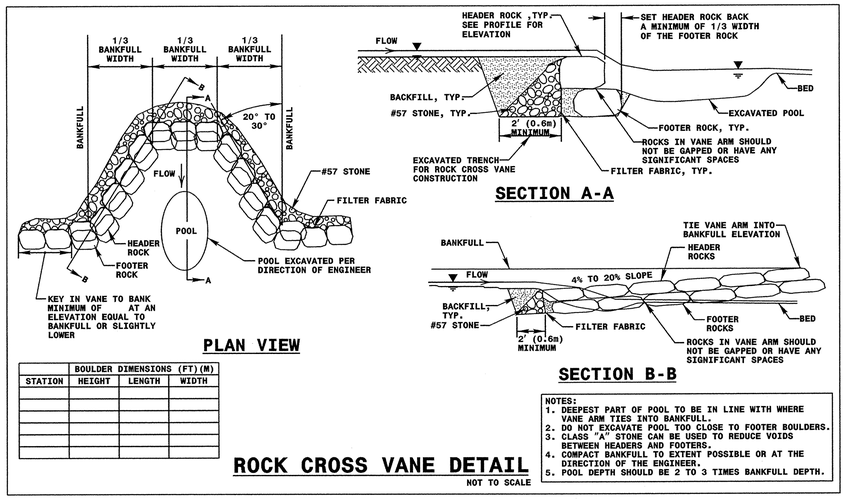

	BOULDER DIMENSIONS (FT)(M)		
STATION	HEIGHT	LENGTH	WIDTH

NOTES:
1. DEEPEST PART OF POOL TO BE IN LINE WITH WHERE VANE ARM TIES INTO BANKFULL.
2. DO NOT EXCAVATE POOL TOO CLOSE TO FOOTER BOULDERS.
3. CLASS "A" STONE CAN BE USED TO REDUCE VOIDS BETWEEN HEADERS AND FOOTERS.
4. COMPACT BANKFULL TO EXTENT POSSIBLE OR AT THE DIRECTION OF THE ENGINEER.
5. POOL DEPTH SHOULD BE 2 TO 3 TIMES BANKFULL DEPTH.

ROCK CROSS VANE DETAIL

NOT TO SCALE

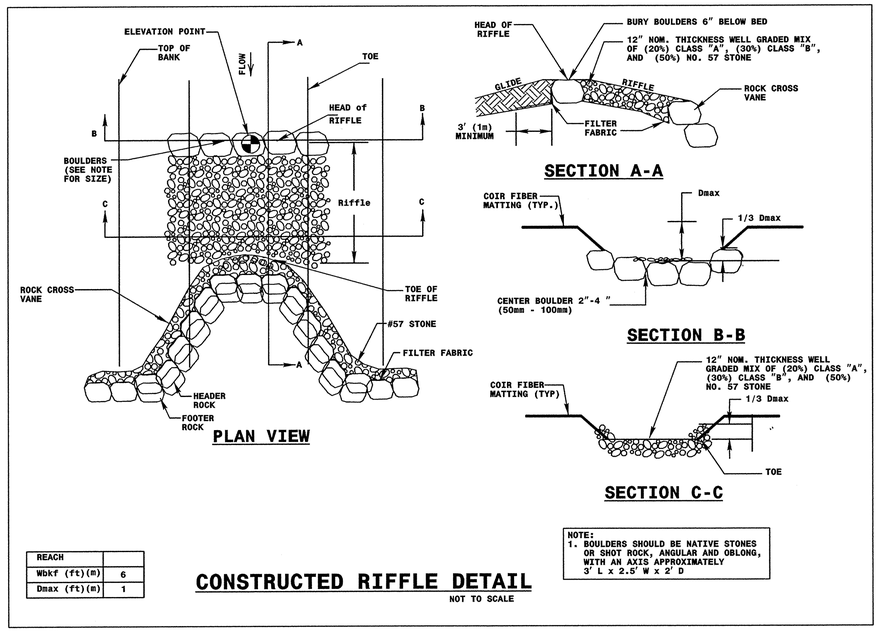

REACH	
Wbkf (ft)(m)	6
Dmax (ft)(m)	1

NOTE:
1. BOULDERS SHOULD BE NATIVE STONES OR SHOT ROCK, ANGULAR AND OBLONG, WITH AN AXIS APPROXIMATELY 3' L x 2.5' W x 2' D

CONSTRUCTED RIFFLE DETAIL

NOT TO SCALE

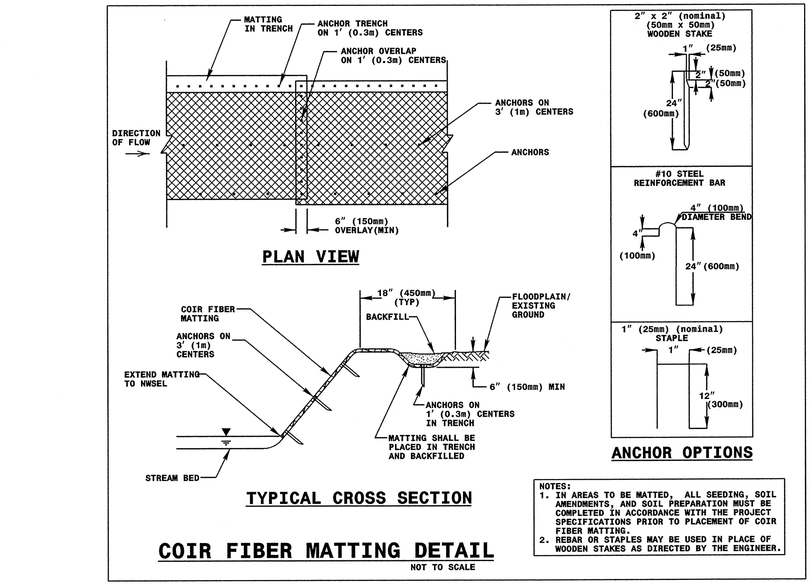

NOTES:
1. IN AREAS TO BE MATTED, ALL SEEDING, SOIL AMENDMENTS, AND SOIL PREPARATION MUST BE COMPLETED IN ACCORDANCE WITH THE PROJECT SPECIFICATIONS PRIOR TO PLACEMENT OF COIR FIBER MATTING.
2. REBAR OR STAPLES MAY BE USED IN PLACE OF WOODEN STAKES AS DIRECTED BY THE ENGINEER.

COIR FIBER MATTING DETAIL

NOT TO SCALE

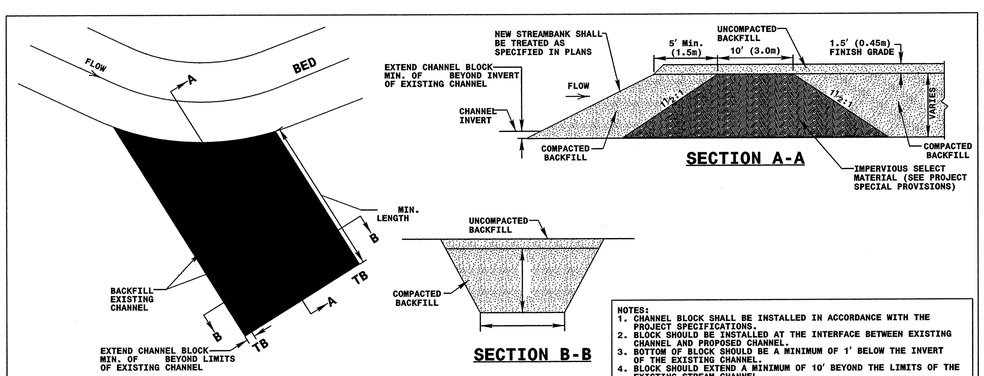

NOTES:
1. CHANNEL BLOCK SHALL BE INSTALLED IN ACCORDANCE WITH THE PROJECT SPECIFICATIONS.
2. BLOCK SHOULD BE INSTALLED AT THE INTERFACE BETWEEN EXISTING CHANNEL AND PROPOSED CHANNEL.
3. BOTTOM OF BLOCK SHOULD BE A MINIMUM OF 1' BELOW THE INVERT OF THE EXISTING CHANNEL.
4. BLOCK SHOULD EXTEND A MINIMUM OF 10' BEYOND THE LIMITS OF THE EXISTING STREAM CHANNEL.
5. INSTALL EROSION CONTROL MATTING AND SEED IN ACCORDANCE WITH THE PROJECT SPECIFICATIONS IMMEDIATELY AFTER GRADING.
6. COMPACT BACKFILL TO EXTENT POSSIBLE OR AT THE DIRECTION OF THE ENGINEER.

STREAM PLUG

NOT TO SCALE

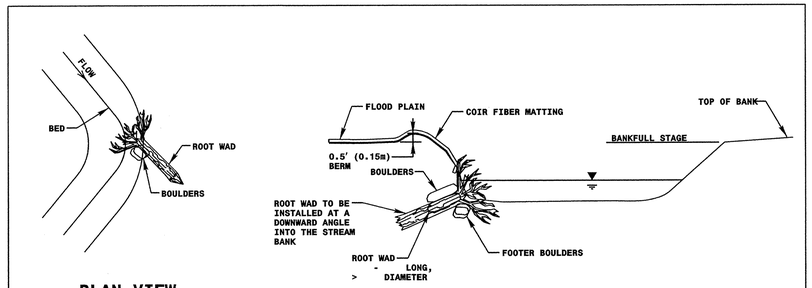

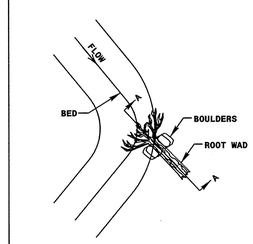

NOTES:

ORIENT ROOT WADS SO THAT THE STREAM FLOW MEETS THE ROOT WAD STRAIGHT ON, DEFLECTING THE WATER AWAY FROM THE BANK.

METHODS OF INSTALLATION:

DRIVE POINT METHOD:

SHARPEN THE END OF THE LOG BEFORE "DRIVING" AT A DOWNWARD ANGLE INTO THE BANK. BOULDER SHOULD BE PLACED ON EACH SIDE OF THE ROOT WAD TO PIN IT IN PLACE. THE BOULDERS SHALL BE APPROXIMATELY 3' X 2.5' X 2'. ONE-THIRD OF THE ROOT WAD SHOULD REMAIN BELOW NORMAL BASE FLOW CONDITIONS.

TRENCHING METHOD:

IF THE ROOT WAD CANNOT BE DRIVEN INTO THE BANK OR THE BANK NEEDS TO BE RECONSTRUCTED, THE TRENCHING METHOD SHOULD BE USED. THIS METHOD REQUIRES THAT A TRENCH BE EXCAVATED FOR THE LOG PORTION OF THE ROOT WAD. IN THIS CASE, FOOTER BOULDERS SHOULD BE INSTALLED UNDERNEATH THE ROOT WAD IN A TRENCH EXCAVATED PARALLEL TO THE BANK AND WELL BELOW THE STREAM BED. BOULDERS SHOULD BE PLACED ON EACH SIDE OF THE ROOTWAD TO PIN IT IN PLACE. THE BOULDERS SHOULD BE APPROXIMATELY 3' X 2.5' X 2'. ONE-THIRD OF THE ROOT WAD SHOULD REMAIN BELOW NORMAL BASE FLOW CONDITIONS.

ROOT WAD DETAIL

NOT TO SCALE

REVISIONS

8/17/99

11:05:38 AM
R:\3215\Bridge321\Roadway\Proj\17BP14R73_REU_PSH.dgn
bpross

PROJECT REFERENCE NO.	SHEET NO.
17BP.14.R.73	RF-1
R/W SHEET NO.	
ROADWAY DESIGN ENGINEER	HYDRAULICS ENGINEER

NORTH CAROLINA PROFESSIONAL SEAL 022559 ENGINEER JAMES B. VOSO

NORTH CAROLINA PROFESSIONAL SEAL 008945 ENGINEER DANA J. BOLDEN

PLANTING DETAILS

LIVE STAKES PLANTING DETAIL

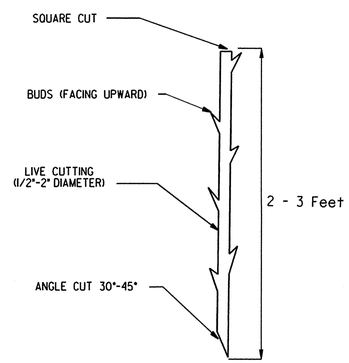

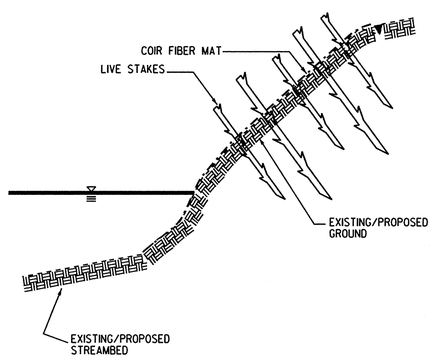

BANK STABILIZATION WITH LIVE STAKES

NOTE:
LIVE STAKES SHALL BE SPACED APPROXIMATELY 4 FEET ON CENTER
LIVE STAKES SHALL BE DRIVEN UNTIL APPROXIMATELY 3/4 OF LIVE STAKE IS WITHIN GROUND

BAREROOT PLANTING DETAIL DIBBLE PLANTING METHOD USING THE KBC PLANTING BAR

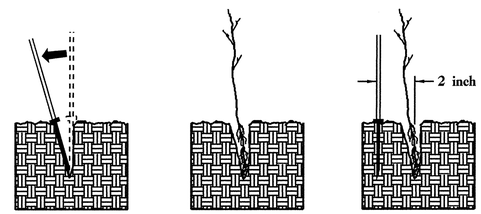

1. Insert planting bar as shown and pull handle toward planter.
2. Remove planting bar and place seedling at correct depth.
3. Insert planting bar 2 inches toward planter from seedling.

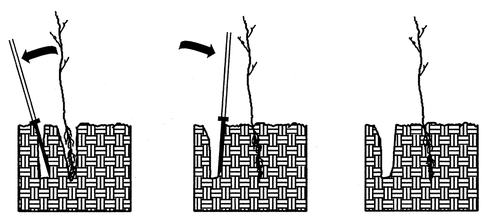

4. Pull handle of bar toward planter, firming soil at bottom.
5. Push handle forward firming soil at top.
6. Leave compaction hole open. Water thoroughly.

PLANTING NOTES:

PLANTING BAG
During planting, seedlings shall be kept in a moist canvas bag or similar container to prevent the root systems from drying.

KBC PLANTING BAR
Planting bar shall have a blade with a triangular cross section, and shall be 12 inches long, 4 inches wide and 1 inch thick at center.

ROOT PRUNING
All seedlings shall be root pruned, if necessary, so that no roots extend more than 10 inches below the root collar.

☐ TYPE 1 STREAMBANK REFORESTATION SHALL BE PLANTED 3 FT. TO 5 FT. ON CENTER, RANDOM SPACING, AVERAGING 4 FT. ON CENTER, APPROXIMATELY 2724 PLANTS PER ACRE.

☐ TYPE 2 STREAMBANK REFORESTATION SHALL BE PLANTED 6 FT. TO 10 FT. ON CENTER, RANDOM SPACING, AVERAGING 8 FT. ON CENTER, APPROXIMATELY 680 PLANTS PER ACRE.

☐ NOTE: TYPE 1 AND TYPE 2 STREAMBANK REFORESTATION SHALL BE PAID FOR AS "STREAMBANK REFORESTATION"

STREAMBANK REFORESTATION TYPICAL

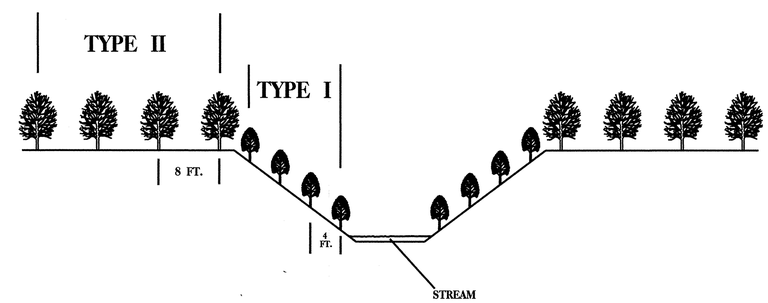

STREAMBANK REFORESTATION

MIXTURE, TYPE, SIZE, AND FURNISH SHALL CONFORM TO THE FOLLOWING:

TYPE 1			
50%	SALIX NIGRA	BLACK WILLOW	2 ft - 3 ft LIVE STAKES
50%	CORNUS AMOMUM	SILKY DOGWOOD	2 ft - 3 ft LIVE STAKES
TYPE 2			
25%	LIRIODENDRON TULIPIFERA	TULIP POPLAR	12 in - 18 in BR
25%	PLATANUS OCCIDENTALIS	SYCAMORE	12 in - 18 in BR
25%	PRUNUS SEROTINA	BLACK CHERRY	12 in - 18 in BR
25%	BETULA NIGRA	RIVER BIRCH	12 in - 18 in BR

☐ SEE PLAN SHEETS FOR AREAS TO BE PLANTED

STREAMBANK REFORESTATION DETAIL SHEET 1 OF 2

N.C.D.O.T. - ROADSIDE ENVIRONMENTAL UNIT

PROJECT REFERENCE NO.	SHEET NO.
17BP.14.R.73	RF-2
R/W SHEET NO.	
ROADWAY DESIGN ENGINEER	HYDRAULICS ENGINEER

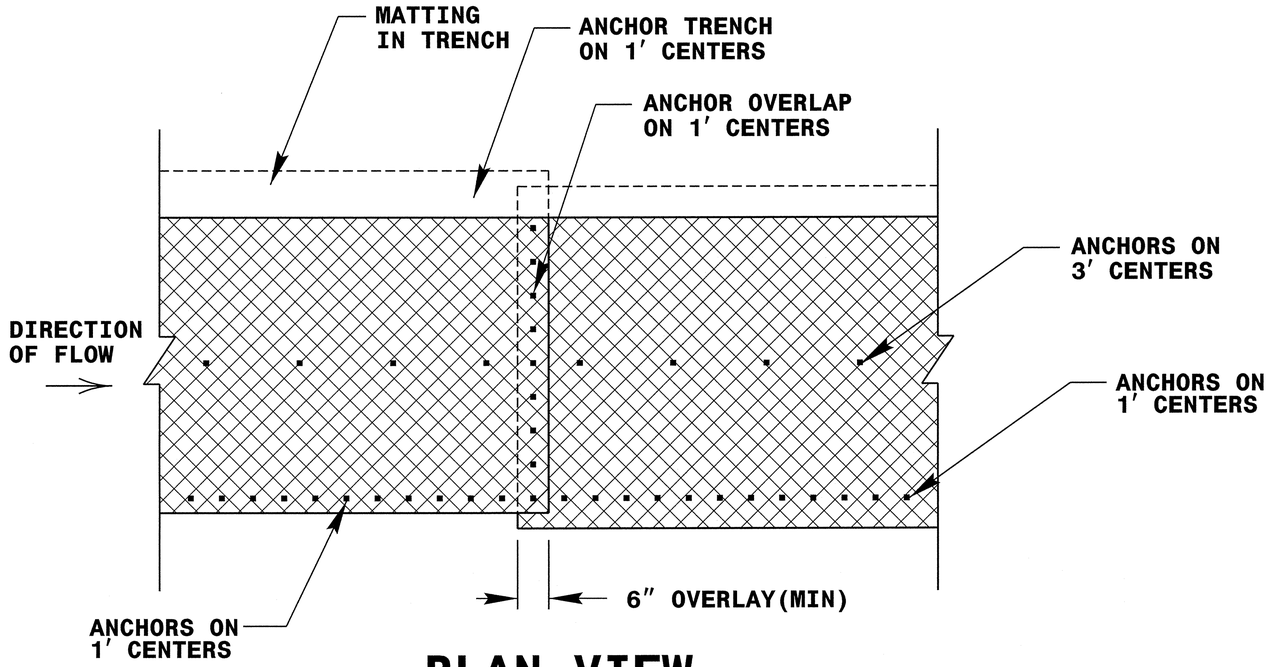

PLAN VIEW

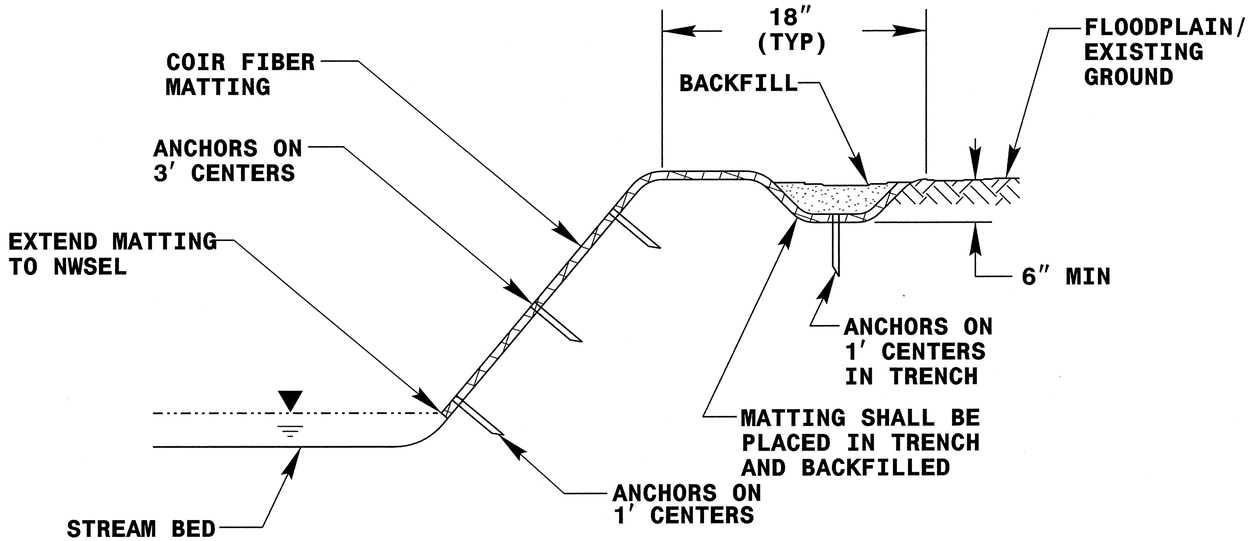

TYPICAL CROSS SECTION

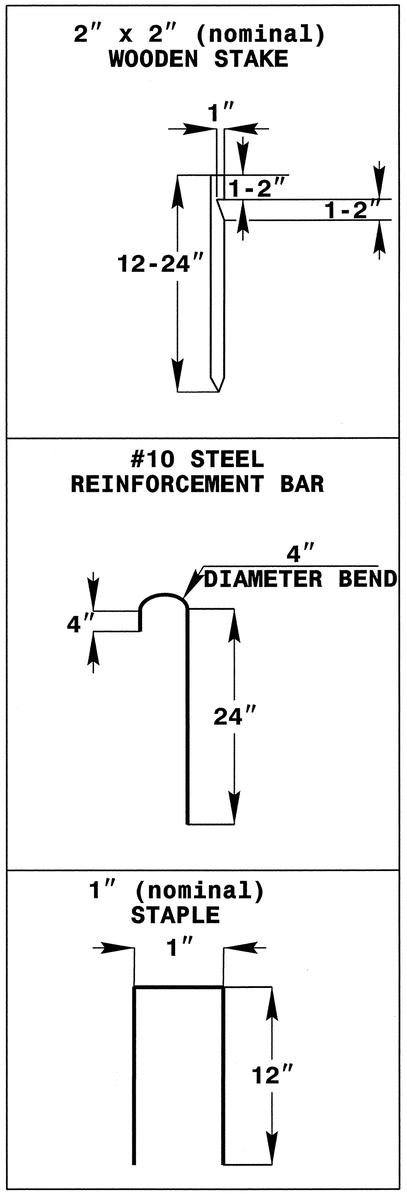

ANCHOR OPTIONS

COIR FIBER MATTING DETAIL

NOT TO SCALE

STREAMBANK REFORESTATION

DETAIL SHEET 2 OF 2

N.C.D.O.T.- ROADSIDE ENVIRONMENTAL UNIT

STATE OF NORTH CAROLINA
DIVISION OF HIGHWAYS

TRANSPORTATION MANAGEMENT PLAN

MACON COUNTY

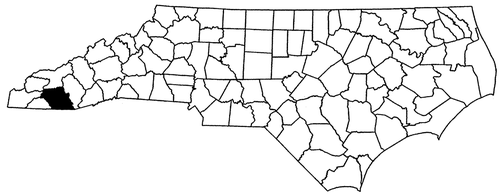

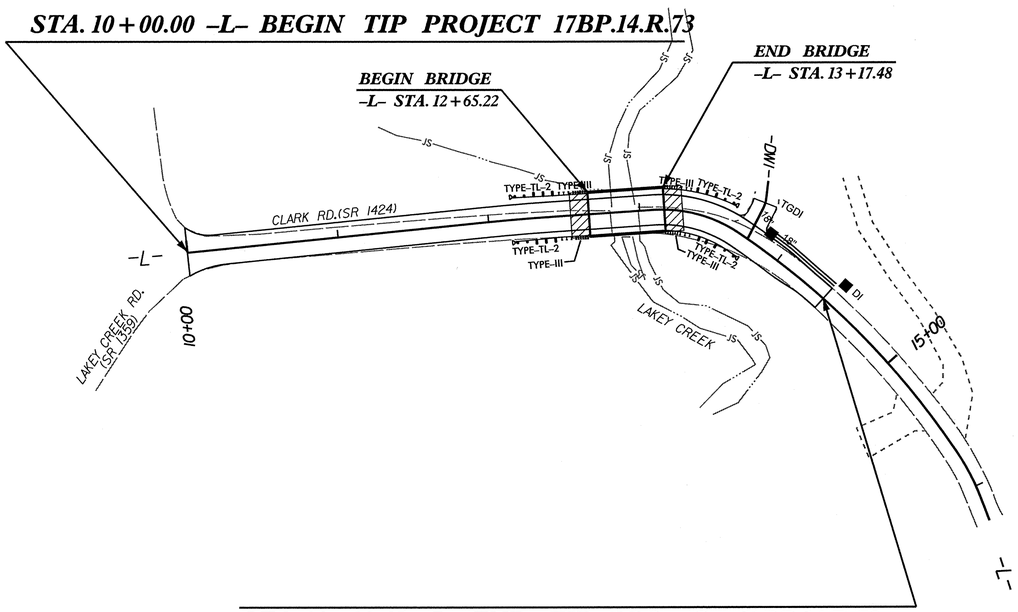

NAD 83/
NSRS 2007

INDEX OF SHEETS

SHEET NO.	TITLE
TMP-1	TITLE SHEET, AND INDEX OF SHEETS
TMP-1A	LIST OF APPLICABLE ROADWAY STANDARD DRAWINGS, LEGEND, AND TEMPORARY PAVEMENT MARKING
TMP-1B	TRANSPORTATION OPERATIONS PLAN: (MANAGEMENT STRATEGIES, GENERAL NOTES AND LOCAL NOTES)
TMP-1C	STANDARD TEMPORARY SHORING DETAILS
TMP-2	TEMPORARY TRAFFIC CONTROL PHASE I
TMP-3	TEMPORARY TRAFFIC CONTROL PHASE II & III
PMP-1	PAVEMENT MARKING PLAN

SHEET NO.
TMP-1

17BP.14.R.73

PROJECT:

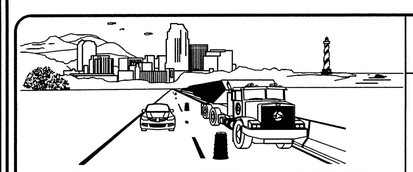

WORK ZONE SAFETY & MOBILITY
"from the MOUNTAINS to the COAST"

N.C.D.O.T. WORK ZONE TRAFFIC CONTROL
1561 MAIL SERVICE CENTER (MSC) RALEIGH, NC 27699-1561
750 N. GREENFIELD PARKWAY, GARNER, NC 27529 (DELIVERY)
PHONE: (919) 773-2800 FAX: (919) 771-2745

J. S. BOURNE, P.E. — *STATE TRAFFIC MANAGEMENT ENGINEER*
JAMES VOSO, P.E. — *TRAFFIC CONTROL PROJECT ENGINEER*
JASON SNAPP, P.E. — *TRAFFIC CONTROL PROJECT DESIGN ENGINEER*
BRIAN ROSS — *TRAFFIC CONTROL DESIGN ENGINEER*

DIVISION OF HIGHWAYS * STATE OF NORTH CAROLINA * DEPARTMENT OF TRANSPORTATION * WORK ZONE TRAFFIC CONTROL

Mattern & Craig
CONSULTING ENGINEERS - SURVEYORS
12 BROAD STREET
ASHEVILLE, NORTH CAROLINA 28801
(828) 254-2201 - FAX (828) 254-4562

APPROVED: James Voso
DATE: 7-14-14

SEAL

NORTH CAROLINA PROFESSIONAL SEAL 022699 ENGINEER JAMES B. VOSO

10:57:45 AM
R:\3215\Bridge32\Traffic\TrafficControl\Roadway\17BP14R73_TC_TSH.dgn
bgross

PROJ. REFERENCE NO.	SHEET NO.
17BP.14.R.73	TMP-1A

ROADWAY STANDARD DRAWINGS

THE FOLLOWING ROADWAY STANDARDS AS SHOWN IN "ROADWAY STANDARD DRAWINGS" - PROJECT SERVICES UNIT - N.C. DEPARTMENT OF TRANSPORTATION - RALEIGH, N.C., DATED JANAUARY 2012 ARE APPLICABLE TO THIS PROJECT AND BY REFERENCE HEREBY ARE CONSIDERED A PART OF THESE PLANS:

STD. NO.	TITLE
1101.01	WORK ZONE WARNING SIGNS
1101.02	TEMPORARY LANE CLOSURES
1101.11	TRAFFIC CONTROL DESIGN TABLES
1110.01	STATIONARY WORK ZONE SIGNS
1130.01	DRUMS
1135.01	CONES
1145.01	BARRICADES
1150.01	FLAGGING DEVICES
1160.01	TEMPORARY CRASH CUSHION
1165.01	WORK VEHICLE LIGHTING SYSTEMS AND TMA DELINEATION
1170.01	PORTABLE CONCRETE BARRIER
1180.01	SKINNY - DRUM
1205.01	PAVEMENT MARKINGS - LINE TYPES AND OFFSETS
1205.02	PAVEMENT MARKINGS - TWO LANE AND MULTILANE ROADWAYS
1205.12	PAVEMENT MARKINGS - BRIDGES
1261.01	GUARDRAIL AND BARRIER DELINEATORS - INSTALLATION SPACING
1261.02	GUARDRAIL AND BARRIER DELINEATORS - TYPES AND MOUNTING
1262.01	GUARDRAIL END DELINEATION

LEGEND

GENERAL

- DIRECTION OF TRAFFIC FLOW
- DIRECTION OF PEDESTRIAN TRAFFIC FLOW
- EXIST. PVMT.
- NORTH ARROW
- PROPOSED PVMT.
- WORK AREA
- REMOVAL
- USER DEFINED (IF NEEDED)
- USER DEFINED (IF NEEDED)

TRAFFIC CONTROL DEVICES

- BARRICADE (TYPE III)
- CONE
- DRUM — SKINNY DRUM — TUBULAR MARKER
- TEMPORARY CRASH CUSHION
- FLASHING ARROW BOARD
- FLAGGER
- LAW ENFORCEMENT
- TRUCK MOUNTED ATTENUATOR (TMA)
- CHANGEABLE MESSAGE SIGN

TEMPORARY SIGNING

- PORTABLE SIGN
- STATIONARY SIGN
- STATIONARY OR PORTABLE SIGN

SIGNALS

- EXISTING
- PROPOSED
- TEMPORARY

PAVEMENT MARKINGS

- EXISTING LINES
- TEMPORARY LINES

PAVEMENT MARKERS

- CRYSTAL/CRYSTAL
- CRYSTAL/RED
- YELLOW/YELLOW

PAVEMENT MARKING SYMBOLS

- PAVEMENT MARKING SYMBOLS

TEMPORARY PAVEMENT MARKING

SYMBOL	DESCRIPTION	PAY ITEM
PA	WHITE EDGELINE 1X	PAINT (4")
P2	WHITE STOP BAR 1X	PAINT (24")

Mattern & Craig
CONSULTING ENGINEERS - SURVEYORS
12 BROAD STREET
ASHEVILLE, NORTH CAROLINA 28801
(828) 254-2201 - FAX (828) 254-4562

APPROVED: [signature] DATE: 7-14-15

NORTH CAROLINA PROFESSIONAL SEAL 022599 ENGINEER JAMES B. VOSO

DIVISION OF HIGHWAYS · STATE OF NORTH CAROLINA · DEPARTMENT OF TRANSPORTATION · WORK ZONE TRAFFIC CONTROL

ROADWAY STANDARD DRAWINGS & LEGEND

10:58:10 AM
R:\3215\Bridge32\Traffic\TrafficControl\Roadway\17BP14R73_TC_TSH.dgn
bgross

GENERAL NOTES / LOCAL NOTES

GENERAL NOTES

CHANGES MAY BE REQUIRED WHEN PHYSICAL DIMENSIONS IN THE DETAIL DRAWINGS, STANDARD DETAILS, AND ROADWAY DETAILS ARE NOT ATTAINABLE TO MEET FIELD CONDITIONS OR RESULT IN DUPLICATE OR UNDESIRED OVERLAPPING OF DEVICES, MODIFICATION MAY INCLUDE: MOVING, SUPPLEMENTING, COVERING, OR REMOVAL OF DEVICES AS DIRECTED BY THE ENGINEER

THE FOLLOWING GENERAL NOTES APPLY AT ALL TIMES FOR THE DURATION OF THE CONSTRUCTION PROJECT, EXCEPT WHEN OTHERWISE NOTED IN THE PLAN, OR DIRECTED BY THE ENGINEER.

TIME RESTRICTIONS

A. DO NOT CONDUCT ANY HAULING OPERATIONS AGAINST THE FLOW OF TRAFFIC OF AN OPEN TRAVELWAY UNLESS THE HAULING OPERATION IS PROTECTED BY BARRIER OR GUARDRAIL OR AS DIRECTED BY THE ENGINEER.

LANE AND SHOULDER CLOSURE REQUIREMENTS

B. REMOVE LANE CLOSURE DEVICES FROM THE LANE WHEN WORK IS NOT BEING PERFORMED BEHIND THE LANE CLOSURE OR WHEN A LANE CLOSURE IS NO LONGER NEEDED OR AS DIRECTED BY THE ENGINEER.

C. WHEN PERSONNEL AND/OR EQUIPMENT ARE WORKING ON THE SHOULDER ADJACENT TO AN UNDIVIDED FACILITY AND WITHIN 5 FT OF AN OPEN TRAVEL LANE, CLOSE THE NEAREST OPEN TRAVEL LANE USING ROADWAY STANDARD DRAWING NO. 1101.02 UNLESS THE WORK AREA IS PROTECTED BY BARRIER OR GUARDRAIL.

D. WHEN PERSONNEL AND/OR EQUIPMENT ARE WORKING WITHIN A LANE OF TRAVEL OF AN UNDIVIDED OR DIVIDED FACILITY, CLOSE THE LANE ACCORDING TO THE TRAFFIC CONTROL PLANS, ROADWAY STANDARD DRAWINGS, OR AS DIRECTED BY THE ENGINEER. CONDUCT THE WORK SO THAT ALL PERSONNEL AND/OR EQUIPMENT REMAIN WITHIN THE CLOSED TRAVEL LANE.

E. DO NOT WORK SIMULTANEOUSLY WITHIN 15 FT ON BOTH SIDES OF AN OPEN TRAVELWAY, RAMP, OR LOOP WITHIN THE SAME LOCATION UNLESS PROTECTED WITH GUARDRAIL OR BARRIER.

PAVEMENT EDGE DROP OFF REQUIREMENTS

F. BACKFILL AT A 6:1 SLOPE UP TO THE EDGE AND ELEVATION OF EXISTING PAVEMENT IN AREAS ADJACENT TO AN OPENED TRAVEL LANE THAT HAS AN EDGE OF PAVEMENT DROP-OFF AS FOLLOWS:

BACKFILL DROP-OFFS THAT EXCEED 2 INCHES ON ROADWAYS WITH POSTED SPEED LIMITS OF 45 MPH OR GREATER.

BACKFILL DROP-OFFS THAT EXCEED 3 INCHES ON ROADWAYS WITH POSTED SPEED LIMITS LESS THAN 45 MPH.

BACKFILL WITH SUITABLE COMPACTED MATERIAL, AS APPROVED BY THE ENGINEER, AT NO EXPENSE TO THE DEPARTMENT.

G. DO NOT EXCEED A DIFFERENCE OF 2 INCHES IN ELEVATION BETWEEN OPEN LANES OF TRAFFIC FOR NOMINAL LIFTS OF 1.5 INCHES. INSTALL ADVANCE WARNING "UNEVEN LANES" SIGNS (W8-11) 500 FT IN ADVANCE AND A MINIMUM OF EVERY HALF MILE THROUGHOUT THE UNEVEN AREA.

TRAFFIC PATTERN ALTERATIONS

H. NOTIFY THE ENGINEER TWENTY ONE (21) CALENDAR DAYS PRIOR TO ANY TRAFFIC PATTERN ALTERATION.

SIGNING

I. INSTALL ADVANCE WORK ZONE WARNING SIGNS WHEN WORK IS WITHIN 40 FT FROM THE EDGE OF TRAVEL LANE AND NO MORE THAN THREE (3) DAYS PRIOR TO THE BEGINNING OF CONSTRUCTION.

J. CONTRACTOR TO COVER OR REMOVE ALL SIGNS AND DEVICES REQUIRED TO CLOSE THE ROAD WHEN ROAD CLOSURE IS NOT IN OPERATION.

K. ENSURE ALL NECESSARY SIGNING IS IN PLACE PRIOR TO ALTERING ANY TRAFFIC PATTERN.

TRAFFIC BARRIER

L. INSTALL TEMPORARY BARRIER ACCORDING TO THE TRANSPORTATION MANAGEMENT PLANS A MAXIMUM OF TWO (2) WEEKS PRIOR TO BEGINNING WORK IN ANY LOCATION. ONCE TEMPORARY BARRIER IS INSTALLED AT ANY LOCATION PROCEED IN A CONTINUOUS MANNER TO COMPLETE THE PROPOSED WORK IN THAT LOCATION UNLESS OTHERWISE STATED IN THE TRANSPORTATION MANAGEMENT PLANS OR AS DIRECTED BY THE ENGINEER.

DO NOT PLACE BARRIER DIRECTLY ON ANY SURFACE OTHER THAN ASPHALT OR CONCRETE.

ONCE TEMPORARY BARRIER IS INSTALLED AT ANY LOCATION AND NO WORK IS PERFORMED BEHIND THE TEMPORARY BARRIER FOR A PERIOD LONGER THAN TWO (2) MONTHS, REMOVE / RESET TEMPORARY BARRIER AT NO COST TO THE DEPARTMENT UNLESS OTHERWISE STATED IN THE TRANSPORTATION MANAGEMENT PLANS, TEMPORARY BARRIER IS PROTECTING A HAZARD, OR AS DIRECTED BY THE ENGINEER.

INSTALL TEMPORARY BARRIER WITH THE TRAFFIC FLOW BEGINNING WITH THE UPSTREAM SIDE OF TRAFFIC. REMOVE TEMPORARY BARRIER AGAINST THE TRAFFIC FLOW BEGINNING WITH THE DOWNSTREAM SIDE OF TRAFFIC.

INSTALL AND SPACE DRUMS NO GREATER THAN TWICE THE POSTED SPEED LIMIT (MPH) TO CLOSE OR KEEP THE SECTION OF THE ROADWAY CLOSED UNTIL THE TEMPORARY BARRIER CAN BE PLACED OR AFTER THE TEMPORARY BARRIER IS REMOVED.

M. PROTECT THE APPROACH END OF MOVABLE/PORTABLE CONCRETE BARRIER AT ALL TIMES DURING THE INSTALLATION AND REMOVAL OF THE BARRIER BY EITHER A TRUCK MOUNTED ATTENUATOR (MAXIMUM 72 HOURS) OR A TEMPORARY CRASH CUSHION.

PROTECT THE APPROACH END OF MOVABLE/PORTABLE CONCRETE BARRIER FROM ONCOMING TRAFFIC AT ALL TIMES BY A TEMPORARY CRASH CUSHION UNLESS THE APPROACH END OF MOVABLE/PORTABLE CONCRETE BARRIER IS OFFSET FROM ONCOMING TRAFFIC AS FOLLOWS OR AS SHOWN IN THE PLANS: (SEE ALSO 1101.05)

POSTED SPEED LIMIT	MINIMUM OFFSET
40 OR LESS	15 FT
45-50	20 FT
55	25 FT
60 MPH OR GREATER	30 FT

TRAFFIC CONTROL DEVICES

N. WHEN LANE CLOSURES ARE NOT IN EFFECT SPACE CHANNELIZING DEVICES IN WORK AREAS NO GREATER IN FEET THAN TWICE THE POSTED SPEED LIMIT (MPH) EXCEPT 10 FT ON-CENTER IN RADII, AND 3 FT OFF THE EDGE OF AN OPEN TRAVELWAY. REFER TO STANDARD SPECIFICATIONS FOR ROADS AND STRUCTURES SECTIONS 1130 (DRUMS), 1135 (CONES) AND 1180 (SKINNY DRUMS) FOR ADDITIONAL REQUIREMENTS.

O. PLACE TYPE III BARRICADES, WITH "ROAD CLOSED" SIGN R11-2 ATTACHED, OF SUFFICIENT LENGTH TO CLOSE ENTIRE ROADWAY.

PAVEMENT MARKINGS AND MARKERS

P. INSTALL TEMPORARY PAVEMENT MARKINGS ON INTERIM LAYERS OF PAVEMENT AS FOLLOWS:

ROAD NAME	MARKING	MARKER
SR 1424 CLARK RD.	PAINT	NONE

Q. PLACE ONE APPLICATION OF PAINT FOR TEMPORARY TRAFFIC PATTERNS. PLACE A SECOND APPLICATION OF PAINT SIX (6) MONTHS AFTER THE INITIAL APPLICATION AND EVERY SIX MONTHS AS DIRECTED BY THE ENGINEER.

R. TIE PROPOSED PAVEMENT MARKING LINES TO EXISTING PAVEMENT MARKING LINES.

S. REMOVE/REPLACE ANY CONFLICTING/DAMAGED PAVEMENT MARKINGS AND MARKERS BY THE END OF EACH DAY'S OPERATION.

MISCELLANEOUS

T. IN THE EVENT A TIE-IN CANNOT BE MADE IN ONE DAY'S TIME, BRING THE TIE-IN AREA TO AN APPROPRIATE ROADWAY ELEVATION AS DETERMINED BY THE ENGINEER. PLACE BLACK ON ORANGE "LOOSE GRAVEL" SIGNS (W8-7) AND BLACK ON ORANGE "PAVEMENT ENDS" SIGNS (W8-3) 500 FT AND 500 FT RESPECTIVELY IN ADVANCE OF THE UNEVEN AREAS. USE DRUMS TO DELINEATE THE EDGE OF ROADWAY ALONG UNPAVED AREAS.

LOCAL NOTES

CONTRACTOR TO MAINTAIN DRIVEWAY ACCESS AT ALL TIMES

Mattern & Craig
CONSULTING ENGINEERS - SURVEYORS
12 BROAD STREET
ASHEVILLE, NORTH CAROLINA 28801
(828) 254-2201 - FAX (828) 254-4562

APPROVED: DATE: 7-14-14

NORTH CAROLINA PROFESSIONAL SEAL 022599 ENGINEER JAMES B. VOSO

DIVISION OF HIGHWAYS STATE OF NORTH CAROLINA DEPARTMENT OF TRANSPORTATION WORK ZONE TRAFFIC CONTROL

TRANSPORTATION OPERATIONS PLAN

10:58:59 AM
R:\3215\Bridge32\Traffic\TrafficControl\Roadway\17BP14R73_TC_TSH.dgn
bgross

PROJECT REFERENCE NO.	SHEET
17BP.14.R.73	TMP-1C

GEOTECHNICAL ENGINEER — SIGNATURE — DATE

ENGINEER — SIGNATURE — DATE

NORTH CAROLINA PROFESSIONAL SEAL 022599 ENGINEER JAMES B. VOSO

7-14-14

GROUNDWATER CONDITION (SEE NOTE 6)	H SHORING HEIGHT (FT)	SLOPE OR SURCHARGE CASE WITH NO TRAFFIC IMPACT					SURCHARGE CASE WITH TRAFFIC IMPACT				
		SHEET PILES		H-PILES WITH TIMBER LAGGING			SHEET PILES		H-PILES WITH TIMBER LAGGING		
		MINIMUM REQUIRED EMBEDMENT (FT)	MINIMUM REQUIRED SECTION MODULUS (IN^3/FT)	MINIMUM REQUIRED EMBEDMENT* (FT) (SEE NOTE 10)			MINIMUM REQUIRED EMBEDMENT (FT)	MINIMUM REQUIRED SECTION MODULUS (IN^3/FT)	MINIMUM REQUIRED EMBEDMENT* (FT) (SEE NOTE 10)		
				HP 10x42	HP 12x53	HP 14x73			HP 10x42	HP 12x53	HP 14x73
GROUNDWATER ELEVATION BEWTEEN BOTTOM OF SHORING AND PILE TIP	< 6	11.5	4.5	11.5	11.5	11.5	16.0	12.0	13.0	13.0	13.0
	7	13.0	7.0	13.0	13.0	13.0	17.0	14.5	14.5	14.5	14.5
	8	15.0	10.0	--	15.0	15.0	18.0	17.0	--	15.5	15.5
	9	17.0	14.0	--	17.0	17.0	19.0	20.0	--	17.0	17.0
	10	18.5	19.5	--	--	18.5	20.0	23.5	--	--	18.5
	11	20.5	26.0	--	--	--	21.0	28.0	--	--	20.0
	12	22.5	33.0	--	--	--	22.0	33.0	--	--	21.5
GROUNDWATER ELEVATION BELOW PILE TIP	< 6	7.5	3.0	8.0	8.0	8.0	11.0	10.0	9.5	9.5	9.5
	7	8.5	4.5	9.5	9.5	9.5	12.0	12.0	10.5	10.5	10.5
	8	10.0	6.5	10.5	10.5	10.5	12.5	14.0	11.5	11.5	11.5
	9	11.0	9.5	--	12.0	12.0	13.5	16.5	--	12.5	12.5
	10	12.5	13.0	--	--	13.5	14.0	19.5	--	13.5	13.5
	11	13.5	17.0	--	--	14.5	15.0	22.5	--	--	14.5
	12	15.0	21.5	--	--	16.0	16.0	25.5	--	--	15.5

MINIMUM REQUIRED EMBEDMENT AND SECTION MODULUS

*DO NOT USE H-PILES WITH TIMBER LAGGING FOR GROUNDWATER CONDITION, SHORING HEIGHT AND H-PILE SIZE SHOWN IF MINIMUM REQUIRED EMBEDMENT IS "--".

NOTES:

1. AT THE CONTRACTOR'S OPTION, USE STANDARD TEMPORARY SHORING AS NOTED IN THE PLANS.
2. FOR STANDARD TEMPORARY SHORING, SEE STANDARD SHORING PROVISION.
3. STANDARD TEMPORARY SHORING IS BASED ON THE FOLLOWING IN-SITU ASSUMED SOIL PARAMETERS:
   UNIT WEIGHT, γ = 120 LB/CF
   FRICTION ANGLE, ϕ = 30 DEGREES
   COHESION, c = 0 LB/SF
4. DO NOT USE STANDARD TEMPORARY SHORING IF ASSUMED SOIL PARAMETERS ARE NOT APPLICABLE.
5. DO NOT USE STANDARD TEMPORARY SHORING WHEN VERY LOOSE OR SOFT SOIL OR MUCK IS WITHIN THE EMBEDMENT DEPTH.
6. USE GROUNDWATER ELEVATION NOTED IN THE PLANS. IF NO GROUNDWATER ELEVATION IS SHOWN IN THE PLANS, USE "GROUNDWATER ELEVATION BETWEEN BOTTOM OF SHORING AND PILE TIP" FOR GROUNDWATER CONDITION. DO NOT USE STANDARD TEMPORARY SHORING IF GROUNDWATER IS ABOVE BOTTOM OF SHORING.
7. AT THE CONTRACTOR'S OPTION OR IF AVAILABLE CLEAR DISTANCE IS LESS THAN THE MINIMUM REQUIRED FOR CONCRETE BARRIER, SET BARRIER NEXT TO AND UP AGAINST TRAFFIC SIDE OF PILES AND USE "SURCHARGE CASE WITH TRAFFIC IMPACT".
8. AT THE CONTRACTOR'S OPTION OR IF AVAILABLE CLEAR DISTANCE IS LESS THAN 4' FOR TEMPORARY GUARDRAIL, ATTACH GUARDRAIL TO TRAFFIC SIDE OF PILES AS SHOWN IN THE PLANS AND USE "SURCHARGE CASE WITH TRAFFIC IMPACT".
9. MINIMUM REQUIRED EXTENSION IS 6" FOR "SLOPE OR SURCHARGE CASE WITH NO TRAFFIC IMPACT" AND 32" FOR "SURCHARGE CASE WITH TRAFFIC IMPACT".
10. MINIMUM REQUIRED EMBEDMENT FOR H-PILES WITH TIMBER LAGGING IS BASED ON DRIVEN H-PILES AT MAXIMUM 6' SPACING. AT THE CONTRACTOR'S OPTION, EMBEDMENT DEPTHS MAY BE REDUCED BY 25% FOR DRILLED-IN H-PILES.
11. SUBMIT A "STANDARD TEMPORARY SHORING SELECTION FORM" AT LEAST 7 DAYS BEFORE STARTING TEMPORARY SHORING CONSTRUCTION. UP TO 3 SHORING LOCATIONS MAY BE INCLUDED ON EACH FORM.
12. CONTACT THE ENGINEER IF PILES DO NOT ATTAIN THE MINIMUM REQUIRED EMBEDMENT.

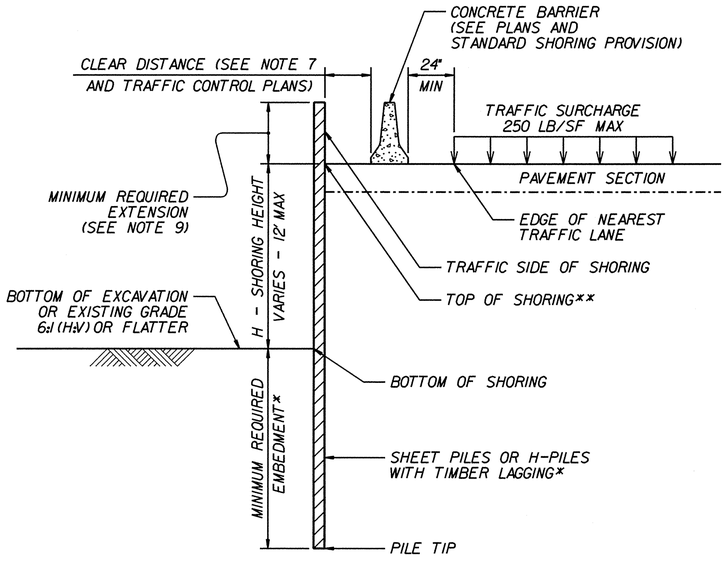

CONCRETE BARRIER

**TOP OF SHORING = EDGE OF PAVEMENT

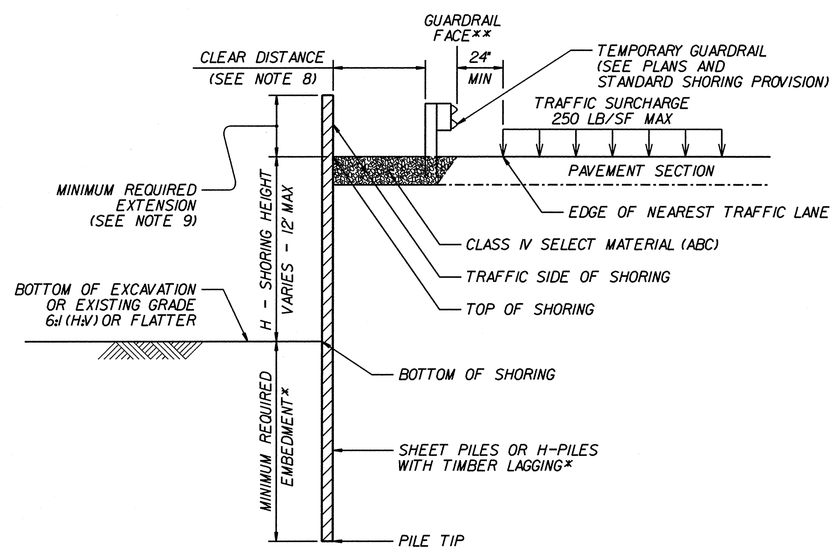

TEMPORARY GUARDRAIL

**GUARDRAIL FACE = EDGE OF PAVEMENT

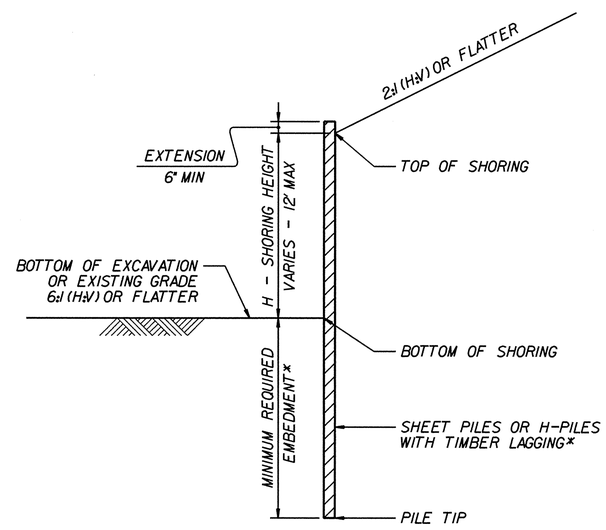

STANDARD TEMPORARY SHORING

(SLOPE CASE)
*SEE TABLE ABOVE.

STANDARD TEMPORARY SHORING

(SURCHARGE CASE)
*SEE TABLE ABOVE.

Mattern & Craig
CONSULTING ENGINEERS - SURVEYORS
12 BROAD STREET
ASHEVILLE, NORTH CAROLINA 28801
(828) 254-2201 - FAX (828) 254-4562

STATE OF NORTH CAROLINA DEPARTMENT OF TRANSPORTATION

GEOTECHNICAL ENGINEERING UNIT

STATE OF NORTH CAROLINA DEPARTMENT OF TRANSPORTATION RALEIGH

STANDARD DRAWING NO. 1801.01

STANDARD TEMPORARY SHORING

DATE: 1-17-12

PROJ. REFERENCE NO.	SHEET NO.
17BP.14.R.73	TMP-2

PHASE I OVERVIEW

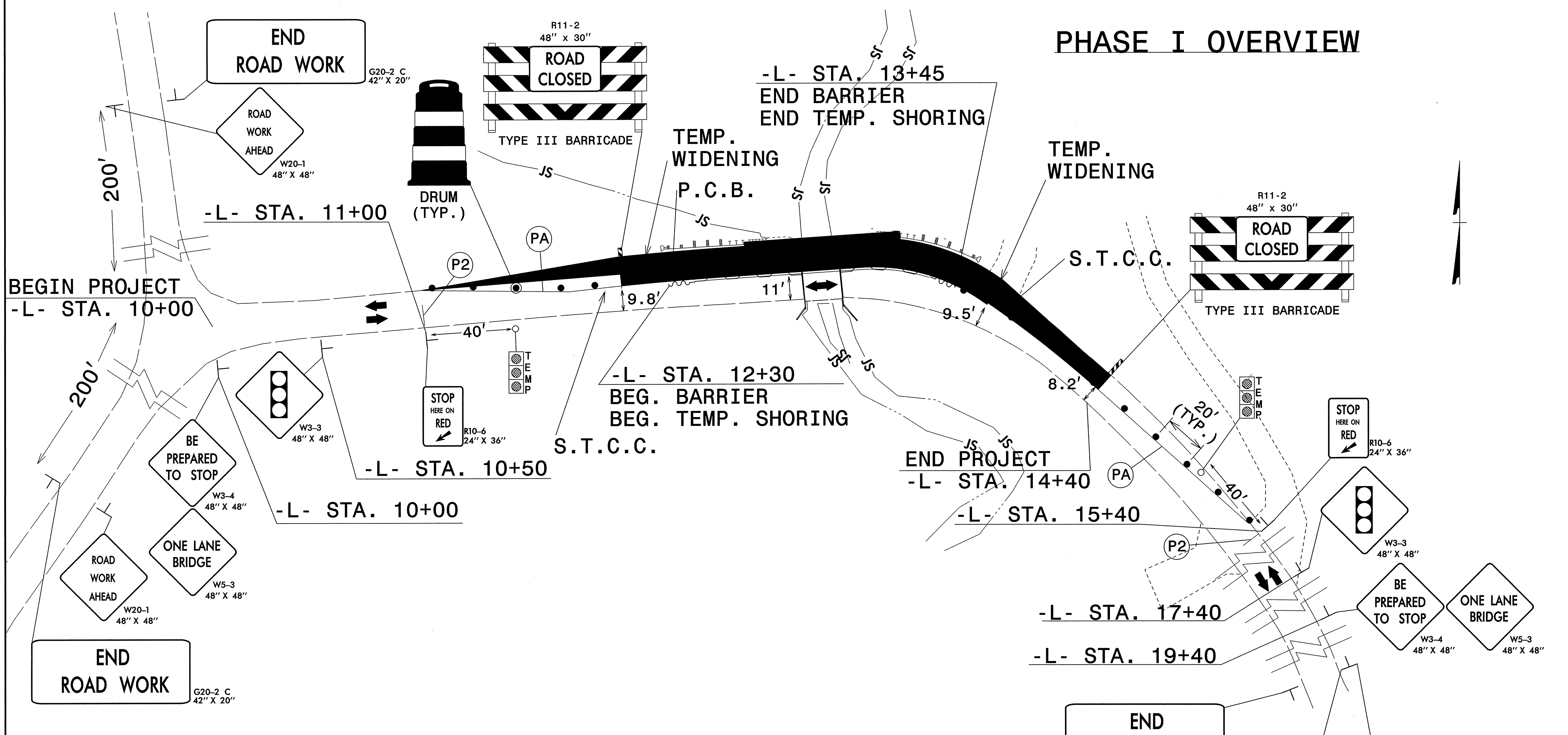

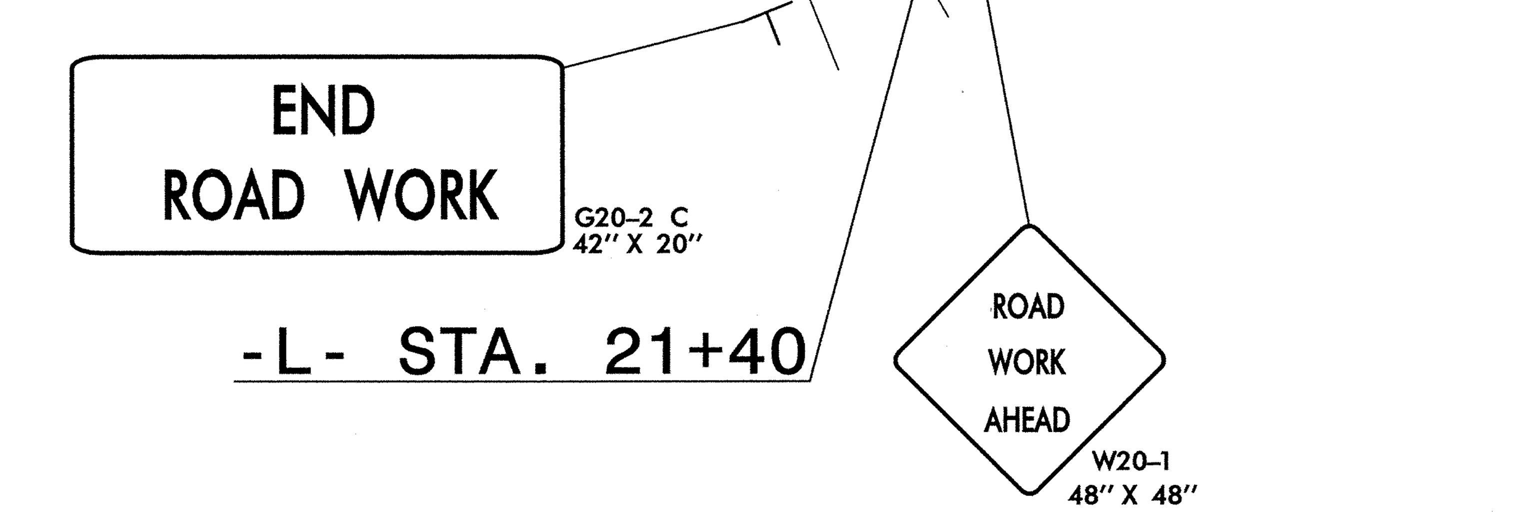

PHASE I

USING ROADWAY STANDARD DRAWING 1101.02, SHEET 1 OF 15, COMPLETE THE FOLLOWING WORKING IN A CONTINUOUS MANNER, AS SHOWN, USING FLAGGERS, FLAGGER AHEAD SIGNS AND DRUMS.

STEP 1: - INSTALL ADVANCE WARNING SIGNS, WORK ZONE TRAFFIC CONTROL SIGNS, AND TEMPORARY SIGNAL, KEEPING SIGNS AND SIGNAL HEADS COVERED UNTIL THE DAY WORK BEGINS.

STEP 2: - PLACE TEMPORARY PAVEMENT MARKING (PAINT).

- UNCOVER ALL WARNING AND WORK ZONE TRAFFIC CONTROL SIGNS AND AND SIGNALS, PLACE SR 1424 (CLARK RD.) TRAFFIC IN A ONE-LANE, TWO-WAY PATTERN FROM -L- STA. 11+00+/- TO -L- STA. 15+40+/-.

USING ROADWAY STANDARD DRAWING 1101.02, SHEET 1 OF 15, COMPLETE THE FOLLOWING WORKING IN A CONTINUOUS MANNER, AS SHOWN, USING TEMPORARY SIGNALS, WORK ZONE TRAFFIC CONTROL SIGNS AND DRUMS.

STEP 3: - PLACE TEMPORARY CONCRETE BARRIER FROM -L- STA. 12+30 TO -L- STA. 13+45, KEEPING ENDS PROTECTED BY TEMPORARY CRASH CUSHIONS. BARRIER SHALL BE TEMPORARY METAL RAIL ACROSS EXISTING BRIDGE FROM -L- STA. 12+80 TO -L- STA. 13+00 (SEE STRUCTURE PLANS, SHEET S-3).

- REMOVE A PORTION OF THE BRIDGE AND BEAMS ON THE NORTHERN SIDE AS NOTED ON BRIDGE STAGE 1 CONSTRUCTION SHEET S-3.

STEP 4: - USING GEOTECHNICAL STANDARD DRAWING 1801.01, OR CONTRACTOR PROVIDED DESIGN, PLACE TEMPORARY SHORING BEHIND CONCRETE BARRIER AT THE FOLLOWING LOCATIONS:
-L- STA. 12+30, 0.42' RT. TO -L- STA. 12+66, 0.42' RT.
-L- STA. 13+16, 0.42' RT. TO -L- STA. 13+45, 0.42' RT.

STEP 5: - BEHIND TEMPORARY BARRIER, BEGIN CONSTRUCTION OF PROPOSED STRUCTURE LEFT OF -L- FROM -L- STA. 12+65.22 TO -L- STA. 13+17.48, AS SHOWN (SEE STRUCTURE PLANS).

STEP 6: - CONSTRUCT LEFT OF -L- ALL PROPOSED ROADWAY AND PROPOSED STRUCTURE, UP TO BUT NOT INCLUDING THE FINAL LAYER OF SURFACE COURSE, FROM -L- STA. 11+95 TO -L- STA. 14+40 (SEE ROADWAY PLANS).

STEP 7: - CONSTRUCT ALL GUARDRAIL LEFT OF -L-.

LEGEND

PROPOSED CONSTRUCTION

PA - WHITE EDGELINE (TEMPORARY)

P2 - WHITE STOPLINE (TEMPORARY)

Mattern & Craig
CONSULTING ENGINEERS - SURVEYORS
12 BROAD STREET
ASHEVILLE, NORTH CAROLINA 28801
(828) 254-2201 - FAX (828) 254-4562

APPROVED: [signature] DATE: 7-14-14

NORTH CAROLINA PROFESSIONAL ENGINEER SEAL 022599 JAMES B. VOSO

DIVISION OF HIGHWAYS STATE OF NORTH CAROLINA DEPARTMENT OF TRANSPORTATION WORK ZONE TRAFFIC CONTROL

TRANSPORTATION MANAGEMENT PLAN PHASE I

$$$$SYSTIME$$$$
$$$$$$$$$$$$$$$$DGN$$$$
$$$$USERNAME$$$$

PROJ. REFERENCE NO.	SHEET NO.
17BP.14.R.73	TMP-3

PHASE II OVERVIEW

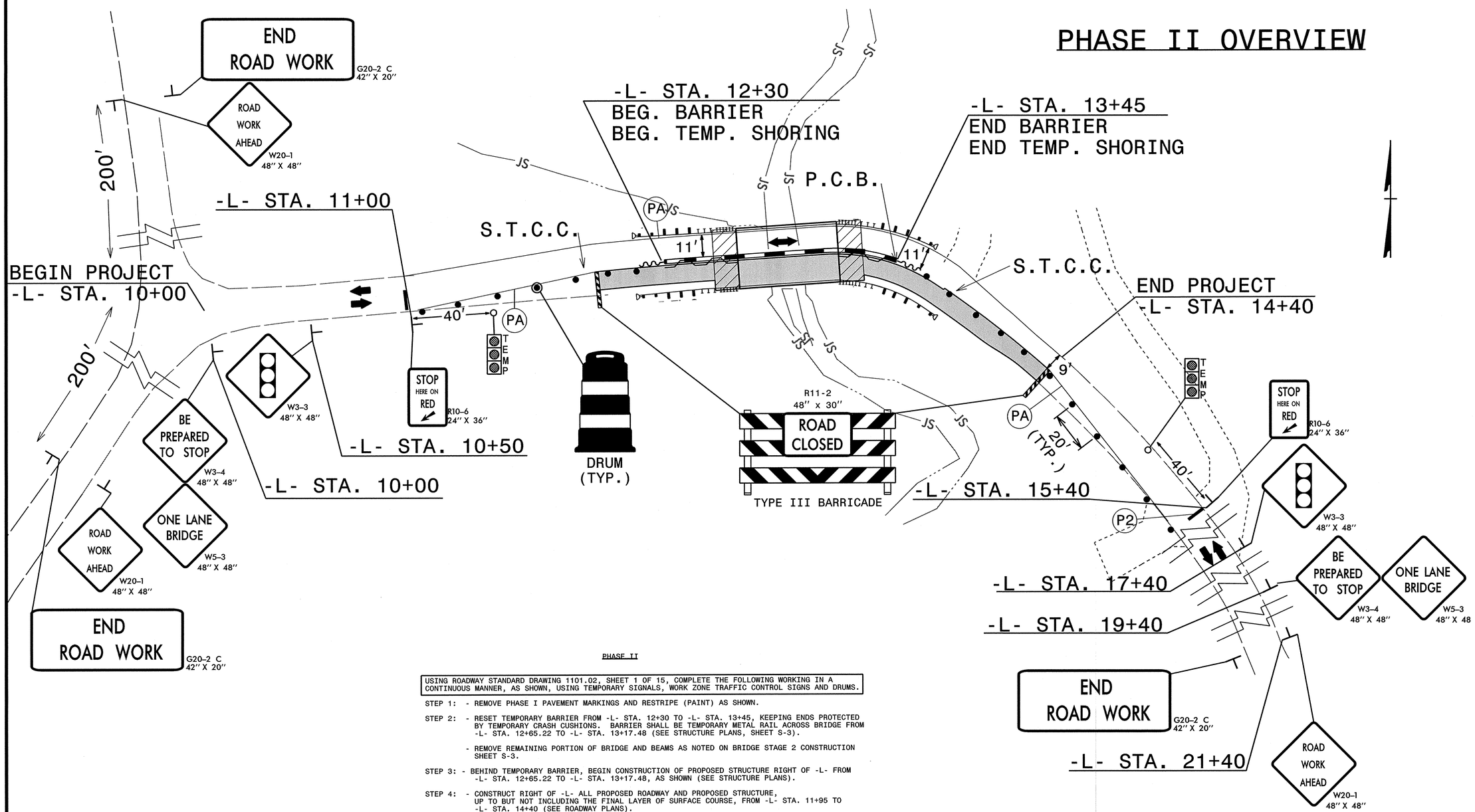

PHASE II

USING ROADWAY STANDARD DRAWING 1101.02, SHEET 1 OF 15, COMPLETE THE FOLLOWING WORKING IN A CONTINUOUS MANNER, AS SHOWN, USING TEMPORARY SIGNALS, WORK ZONE TRAFFIC CONTROL SIGNS AND DRUMS.

STEP 1: - REMOVE PHASE I PAVEMENT MARKINGS AND RESTRIPE (PAINT) AS SHOWN.

STEP 2: - RESET TEMPORARY BARRIER FROM -L- STA. 12+30 TO -L- STA. 13+45, KEEPING ENDS PROTECTED BY TEMPORARY CRASH CUSHIONS. BARRIER SHALL BE TEMPORARY METAL RAIL ACROSS BRIDGE FROM -L- STA. 12+65.22 TO -L- STA. 13+17.48 (SEE STRUCTURE PLANS, SHEET S-3).

- REMOVE REMAINING PORTION OF BRIDGE AND BEAMS AS NOTED ON BRIDGE STAGE 2 CONSTRUCTION SHEET S-3.

STEP 3: - BEHIND TEMPORARY BARRIER, BEGIN CONSTRUCTION OF PROPOSED STRUCTURE RIGHT OF -L- FROM -L- STA. 12+65.22 TO -L- STA. 13+17.48, AS SHOWN (SEE STRUCTURE PLANS).

STEP 4: - CONSTRUCT RIGHT OF -L- ALL PROPOSED ROADWAY AND PROPOSED STRUCTURE, UP TO BUT NOT INCLUDING THE FINAL LAYER OF SURFACE COURSE, FROM -L- STA. 11+95 TO -L- STA. 14+40 (SEE ROADWAY PLANS).

- TEMPORARY SHORING MAY BE REMOVED AS WORK ALLOWS.

STEP 5: - CONSTRUCT ALL GUARDRAIL RIGHT OF -L-.

PHASE III

USING ROADWAY STANDARD DRAWING 1101.02, SHEET 1 OF 15, COMPLETE THE FOLLOWING WORKING IN A CONTINUOUS MANNER, AS SHOWN, USING TEMPORARY SIGNALS, WORK ZONE TRAFFIC CONTROL SIGNS AND DRUMS.

STEP 1: - CONSTRUCT ALL PROPOSED ROADWAY, FROM -L- STA. 10+00 TO -L- STA. 11+95, UP TO BUT NOT INCLUDING THE FINAL LAYER OF SURFACE COURSE. MAINTAIN ONE-LANE TWO-WAY TRAFFIC AT ALL TIMES.

STEP 2: - PLACE THE FINAL LAYER OF SURFACE COURSE , FINAL MARKINGS (PAINT) IN THE FINAL PATTERN, AND OPEN -L-, SR 1424 (CLARK RD.) TO THE FINAL TWO-LANE, TWO-WAY PATTERN (SEE ROADWAY PLANS). MAINTAIN ONE-LANE, TWO-WAY TRAFFIC AT ALL TIMES.

STEP 3: - REMOVE ALL TRAFFIC CONTROL DEVICES.

LEGEND

PROPOSED CONSTRUCTION

Mattern & Craig
CONSULTING ENGINEERS - SURVEYORS
12 BROAD STREET
ASHEVILLE, NORTH CAROLINA 28801
(828) 254-2201 - FAX (828) 254-4562

APPROVED: DATE: 7-14-14

NORTH CAROLINA PROFESSIONAL SEAL 022599 ENGINEER JAMES B. VOSO

DIVISION OF HIGHWAYS STATE OF NORTH CAROLINA DEPARTMENT OF TRANSPORTATION WORK ZONE TRAFFIC CONTROL

TRANSPORTATION MANAGEMENT PLAN PHASE II/III

11:01:46 AM
R:\325\BPbridge32\Traffic\TrafficControl\Roadway\17BP14R73_TC_TMP3.dgn
bgross

PROJ. REFERENCE NO.	SHEET NO.
17BP.14.R.73	PMP-1

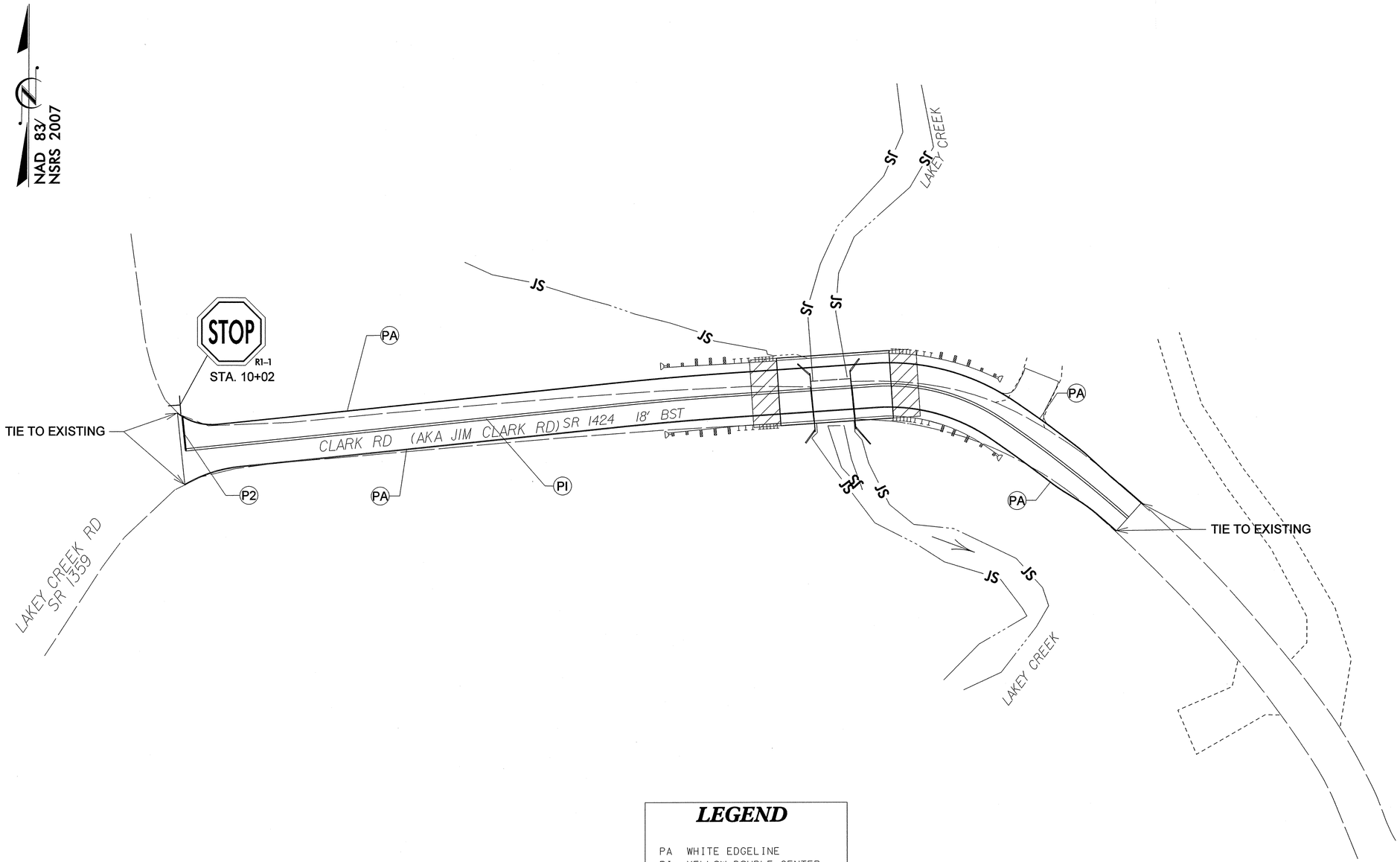

LEGEND

PA WHITE EDGELINE
PI YELLOW DOUBLE CENTER
P2 WHITE STOPLINE

GRAPHIC SCALE

25' 0' 25' 50'
100'

PLANS

PROJECT MARKING SCHEDULE
BRIDGE 321

SYMBOL	DESCRIPTION	PAY ITEM	PAY ITEM QUANTITY
TI	YELLOW DOUBLE CENTER	PAINT (4", DOUBLE COAT)	1760 LF
TA	WHITE EDGELINE	PAINT (4", DOUBLE COAT)	1800 LF
T2	WHITE STOPLINE	PAINT (24", DOUBLE COAT)	30 LF

Mattern & Craig
SINCE 1978
CONSULTING ENGINEERS - SURVEYORS
12 BROAD STREET
ASHEVILLE, NORTH CAROLINA 28801
(828) 254-2201 - FAX (828) 254-4562

APPROVED: DATE: 7-14-14

NORTH CAROLINA PROFESSIONAL SEAL 022559 ENGINEER JAMES B. VOSO

DIVISION OF HIGHWAYS
STATE OF NORTH CAROLINA
DEPARTMENT OF TRANSPORTATION
WORK ZONE TRAFFIC CONTROL

PAVEMENT MARKING PLAN

$$$$SYSTIME$$$$
$$$$DGN$$$$
$$$$USERNAME$$$$

PROJECT NO: 17BP.14.R.73

STATE	STATE PROJECT REFERENCE NO.	SHEET NO.	TOTAL SHEETS
N.C.	17BP.14.R.73	EC-1	

STATE PROJ. NO.	F. A. PROJ. NO.	DESCRIPTION

STATE OF NORTH CAROLINA
DIVISION OF HIGHWAYS

PLAN FOR PROPOSED
HIGHWAY EROSION CONTROL

MACON COUNTY

NAD 83/
NSRS 2007

LOCATION: BRIDGE 321 OVER LAKEY CREEK
ON SR 1424 (CLARK ROAD)
TYPE OF WORK: GRADING, DRAINAGE, PAVING, & STRUCTURE

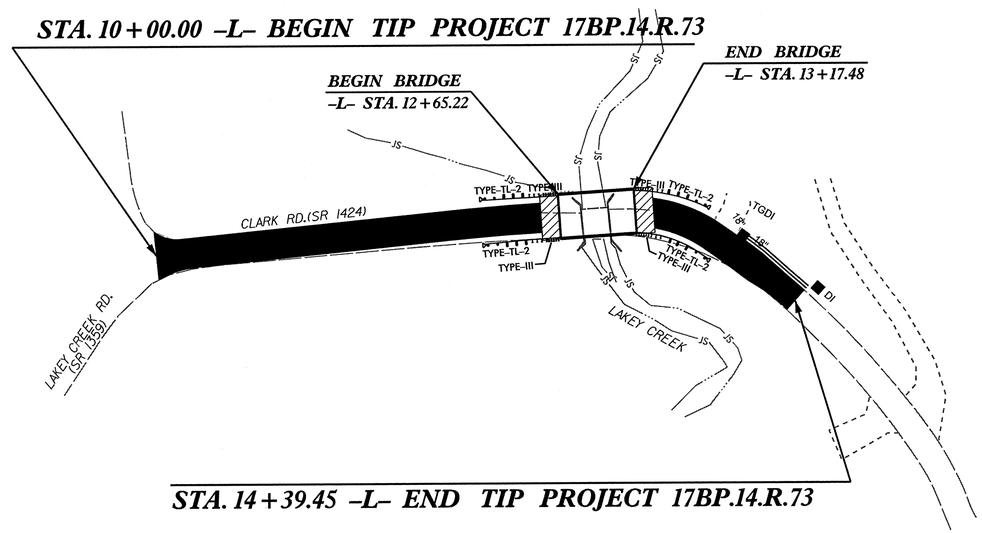

EROSION AND SEDIMENT CONTROL MEASURES

Std. #	Description	Symbol
1630.03	Temporary Silt Ditch	TSD
1630.05	Temporary Diversion	TD
1605.01	Temporary Silt Fence	
1606.01	Special Sediment Control Fence	
1622.01	Temporary Berms and Slope Drains	
1630.02	Silt Basin Type B	
1633.01	Temporary Rock Silt Check Type-A	
	Temporary Rock Silt Check Type-A with Matting and Polyacrylamide (PAM)	
1633.02	Temporary Rock Silt Check Type-B	
	Wattle / Coir Fiber Wattle	SW CFW
	Wattle / Coir Fiber Wattle with Polyacrylamide (PAM)	
1634.01	Temporary Rock Sediment Dam Type-A	
1634.02	Temporary Rock Sediment Dam Type-B	
1635.01	Rock Pipe Inlet Sediment Trap Type-A	
1635.02	Rock Pipe Inlet Sediment Trap Type-B	
1630.04	Stilling Basin	
1630.06	Special Stilling Basin	
	Rock Inlet Sediment Trap:	
1632.01	Type A	A
1632.02	Type B	B
1632.03	Type C	C
	Skimmer Basin	
	Tiered Skimmer Basin	
	Infiltration Basin	

THIS PROJECT CONTAINS EROSION CONTROL PLANS FOR CLEARING AND GRUBBING PHASE OF CONSTRUCTION.

THIS PROJECT HAS BEEN DESIGNED TO SENSITIVE WATERSHED STANDARDS.

ENVIRONMENTALLY SENSITIVE AREA(S) EXIST ON THIS PROJECT

Refer To E. C. Special Provisions for Special Considerations.

DANA BOLDEN
LEVEL IIIA NAME

3171
LEVEL IIIA CERTIFICATION NO.

CLEARING ON THIS PROJECT SHALL BE PERFORMED TO THE LIMITS ESTABLISHED BY METHOD II

GRAPHIC SCALE

0 50
PLANS

0 50
PROFILE (HORIZONTAL)

0 10
PROFILE (VERTICAL)

ROADSIDE ENVIRONMENTAL UNIT
DIVISION OF HIGHWAYS
STATE OF NORTH CAROLINA

THESE EROSION AND SEDIMENT CONTROL PLANS COMPLY WITH THE REGULATIONS SET FORTH BY THE NCG-010000 GENERAL CONSTRUCTION PERMIT EFFECTIVE AUGUST 3, 2011 ISSUED BY THE NORTH CAROLINA DEPARTMENT OF ENVIRONMENT AND NATURAL RESOURCES DIVISION OF WATER QUALITY.

Prepared In the Office of:

Mattern & Craig
SINCE 1978
CONSULTING ENGINEERS - SURVEYORS
12 BROAD STREET
ASHEVILLE, NORTH CAROLINA 28801
(828) 254-2201 - FAX (828) 254-4562

Reviewed In the Office of:

ROADSIDE ENVIRONMENTAL UNIT
1 South Wilmington St.
Raleigh, NC 27611

2012 STANDARD SPECIFICATIONS

Roadway Standard Drawings

The following roadway english standards as appear in "Roadway Standard Drawings"- Roadway Design Unit - N. C. Department of Transportation - Raleigh, N. C., dated January 2012 and the latest revison thereto are applicable to this project and by reference hereby are considered a part of these plans.

1604.01	Railroad Erosion Control Detail	1632.01	Rock Inlet Sediment Trap Type A
1605.01	Temporary Silt Fence	1632.02	Rock Inlet Sediment Trap Type B
1606.01	Special Sediment Control Fence	1632.03	Rock Inlet Sediment Trap Type C
1607.01	Gravel Construction Entrance	1633.01	Temporary Rock Silt Check Type A
1622.01	Temporary Berms and Slope Drains	1633.02	Temporary Rock Silt Check Type B
1630.01	Riser Basin	1634.01	Temporary Rock Sediment Dam Type A
1630.02	Silt Basin Type B	1634.02	Temporary Rock Sediment Dam Type B
1630.03	Temporary Silt Ditch	1635.01	Rock Pipe Inlet Sediment Trap Type A
1630.04	Stilling Basin	1635.02	Rock Pipe Inlet Sediment Trap Type B
1630.05	Temporary Diversion	1640.01	Coir Fiber Baffle
1630.06	Special Stilling Basin	1645.01	Temporary Stream Crossing
1631.01	Matting Installation		

2015\Br-ridge32\Environmental\Design\17BP14R73_EC_TSH.dgn
05:25 AM

PROJECT REFERENCE NO.	SHEET NO.
17BPJ4.R.73	EC-2
R/W SHEET NO.	
ROADWAY DESIGN ENGINEER	HYDRAULICS ENGINEER

TEMPORARY ROCK SILT CHECK TYPE 'A' WITH EXCELSIOR MATTING AND POLYACRYLAMIDE (PAM)

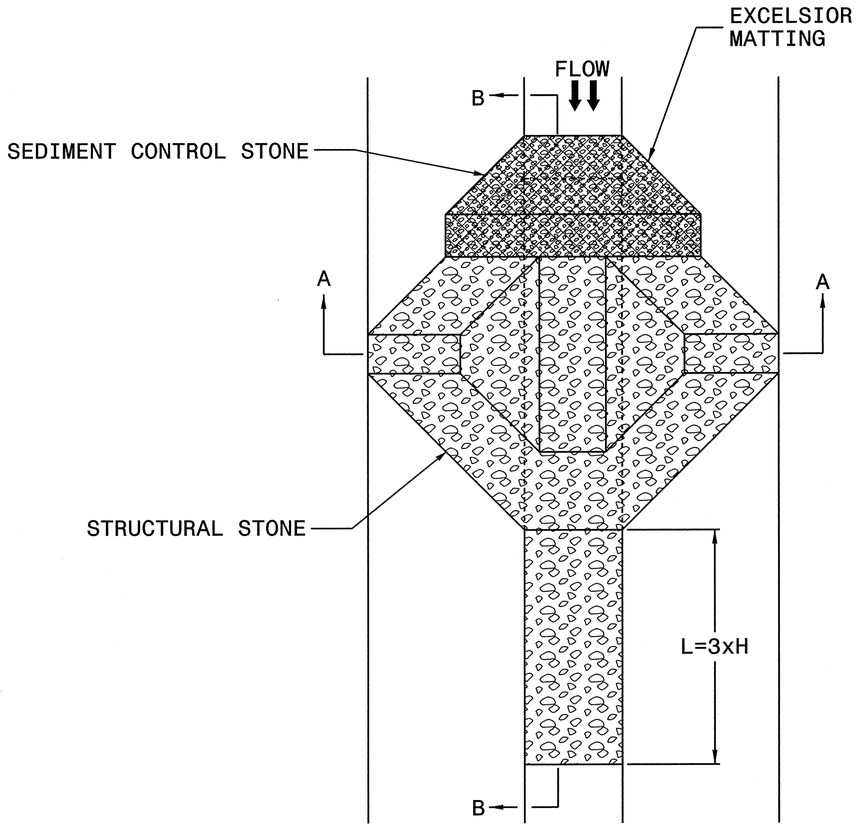

PLAN

NOTES

USE EXCELSIOR FOR MATTING MATERIAL AND ANCHOR MATTING SECTION AT TOP AND BOTTOM WITH CLASS B STONE.

PRIOR TO POLYACRYLAMIDE (PAM) APPLICATION, OBTAIN A SOIL SAMPLE FROM PROJECT LOCATION, AND FROM OFFSITE MATERIAL, AND ANALYZE FOR APPROPRIATE PAM FLOCCULANT TO BE APPLIED TO EACH ROCK SILT CHECK.

INITIALLY APPLY 3.5 OUNCES OF POLYACRYLAMIDE (PAM) TO TOP OF MATTING SECTION AND AFTER EVERY RAINFALL EVENT THAT EQUALS OR EXCEEDS 0.50 INCHES.

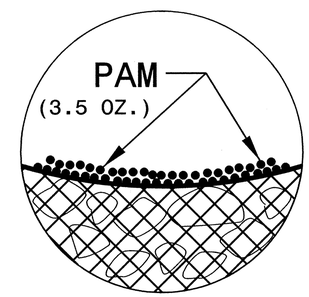

INSET A

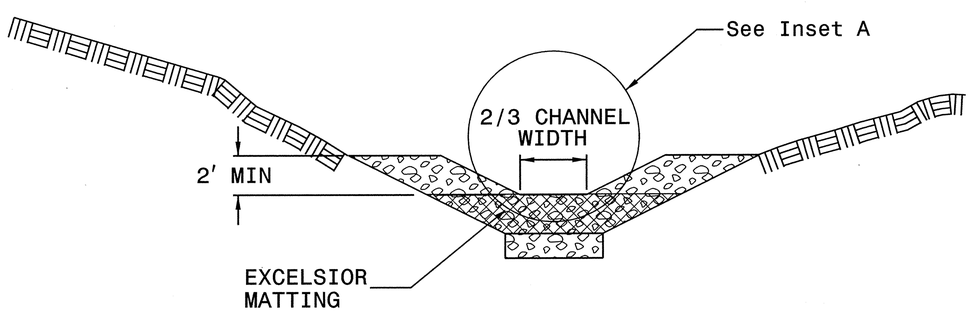

SECTION A-A

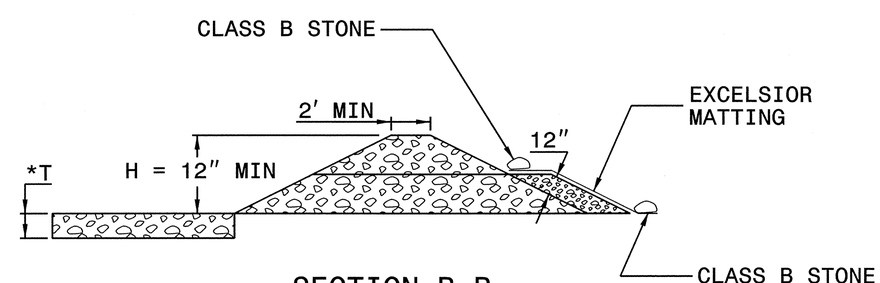

SECTION B-B

*T = 12" MIN., 18" MAX.

NOT TO SCALE

PROJECT REFERENCE NO.	SHEET NO.
17BRPJ4.R.73	EC-3A

ROADWAY DESIGN ENGINEER

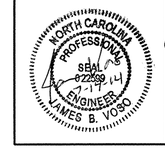

HYDRAULICS ENGINEER

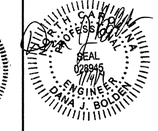

DIVISION OF HIGHWAYS
STATE OF NORTH CAROLINA

SOIL STABILIZATION TIMEFRAMES

SITE DESCRIPTION	STABILIZATION TIME	TIMEFRAME EXCEPTIONS
PERIMETER DIKES, SWALES, DITCHES AND SLOPES	7 DAYS	NONE
HIGH QUALITY WATER (HQW) ZONES	7 DAYS	NONE
SLOPES STEEPER THAN 3:1	7 DAYS	IF SLOPES ARE 10' OR LESS IN LENGTH AND ARE NOT STEEPER THAN 2:1, 14 DAYS ARE ALLOWED.
SLOPES 3:1 OR FLATTER	14 DAYS	7 DAYS FOR SLOPES GREATER THAN 50' IN LENGTH.
ALL OTHER AREAS WITH SLOPES FLATTER THAN 4:1	14 DAYS	NONE, EXCEPT FOR PERIMETERS AND HQW ZONES.

PROJECT REFERENCE NO.	SHEET NO.
17BP.14.R.73	EC-3

ROADWAY DESIGN ENGINEER	HYDRAULICS ENGINEER
NORTH CAROLINA PROFESSIONAL SEAL 022599 ENGINEER JAMES B. VOSO	NORTH CAROLINA PROFESSIONAL SEAL 028945 ENGINEER DINA J. BOLDEN

DIVISION OF HIGHWAYS
STATE OF NORTH CAROLINA

SOIL STABILIZATION SUMMARY SHEET

MATTING FOR EROSION CONTROL

CONST SHEET NO.	LINE	FROM STATION	TO STATION	SIDE	ESTIMATE (SY)
			SUBTOTAL		0
MISCELLANEOUS MATTING TO BE INSTALLED AS DIRECTED BY THE ENGINEER					2833
				TOTAL	2833
				SAY	2900

PERMANENT SOIL REINFORCEMENT MAT

CONST SHEET NO.	LINE	FROM STATION	TO STATION	SIDE	ESTIMATE (SY)
			SUBTOTAL		0
		ADDITIONAL PSRM TO BE INSTALLED			0
				TOTAL	0
				SAY	0

PROJECT REFERENCE NO.	SHEET NO.
17BP.14.R.73	EC-4/CONST.4
R/W SHEET NO.	
ROADWAY DESIGN ENGINEER	HYDRAULICS ENGINEER

NORTH CAROLINA PROFESSIONAL SEAL 022589 ENGINEER JAMES B. VOSO

NORTH CAROLINA PROFESSIONAL SEAL 028945 ENGINEER DANA T. BOLDEN

NAD 83/
NSRS 2007

CLEARING AND GRUBBING
EROSION CONTROL FOR
CONSTRUCTION SHEET 4

NOTES: ANY DEVIATION FROM OPTIONS GIVEN WILL REQUIRE PRIOR APPROVAL BY ENGINEER.

ADDITIONAL EROSION CONTROL DEVICES MAY NEED TO BE INSTALLED AS DIRECTED BY THE ENGINEER.

IF ANY PUMPED DEWATERING IS REQUIRED, A SPECIAL STILLING BASIN SHALL BE PROVIDED AS NEEDED

NOTE:
PLACE TEMPORARY ROCK SEDIMENT DAMS TYPE – B AND TEMPORARY ROCK SILT CHECKS TYPE – A AT DRAINAGE OUTLETS.

NOTE:
UTILIZE TEMPORARY SILT CHECK TYPE – A AS STILLING BASIN WHERE APPLICABLE.

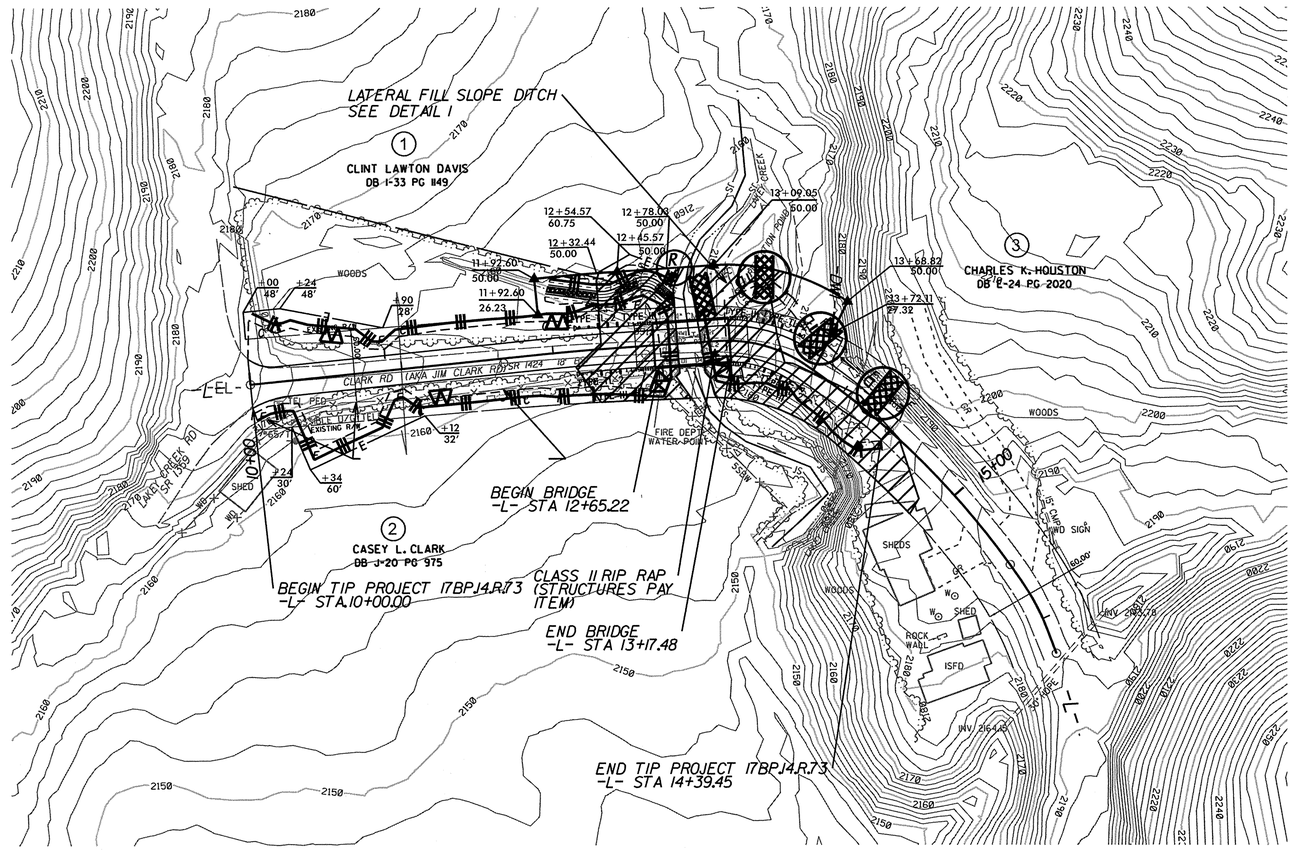

DETAIL 1

LATERAL FILL SLOPE 'V' DITCH

(Not to Scale)

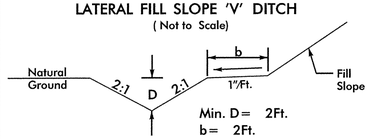

FROM –L– STA. 13+10 TO STA. 13+60 LT

ENVIRONMENTALLY SENSITIVE AREA
SEE PROJECT SPECIAL PROVISIONS

PROJECT REFERENCE NO.	SHEET NO.
17BP.J4.R.73	EC-5/CONST.4
R/W SHEET NO.	
ROADWAY DESIGN ENGINEER	HYDRAULICS ENGINEER

NORTH CAROLINA PROFESSIONAL SEAL 022525 ENGINEER JAMES B. VOSO

NORTH CAROLINA PROFESSIONAL SEAL 028945 ENGINEER DINA J. BOLDEN

NAD 83/
NSRS 2007

Place Matting for Erosion Control on Slope as Work Allows.

NOTES: ANY DEVIATION FROM OPTIONS GIVEN WILL REQUIRE PRIOR APPROVAL BY ENGINEER.

ADDITIONAL EROSION CONTROL DEVICES MAY NEED TO BE INSTALLED AS DIRECTED BY THE ENGINEER.

IF ANY PUMPED DEWATERING IS REQUIRED, A SPECIAL STILLING BASIN SHALL BE PROVIDED AS NEEDED

NOTE:
PLACE TEMPORARY ROCK SEDIMENT DAMS TYPE – B AND TEMPORARY ROCK SILT CHECKS TYPE – A AT DRAINAGE OUTLETS.

NOTE:
UTILIZE TEMPORARY SILT CHECK TYPE – A AS STILLING BASIN WHERE APPLICABLE.

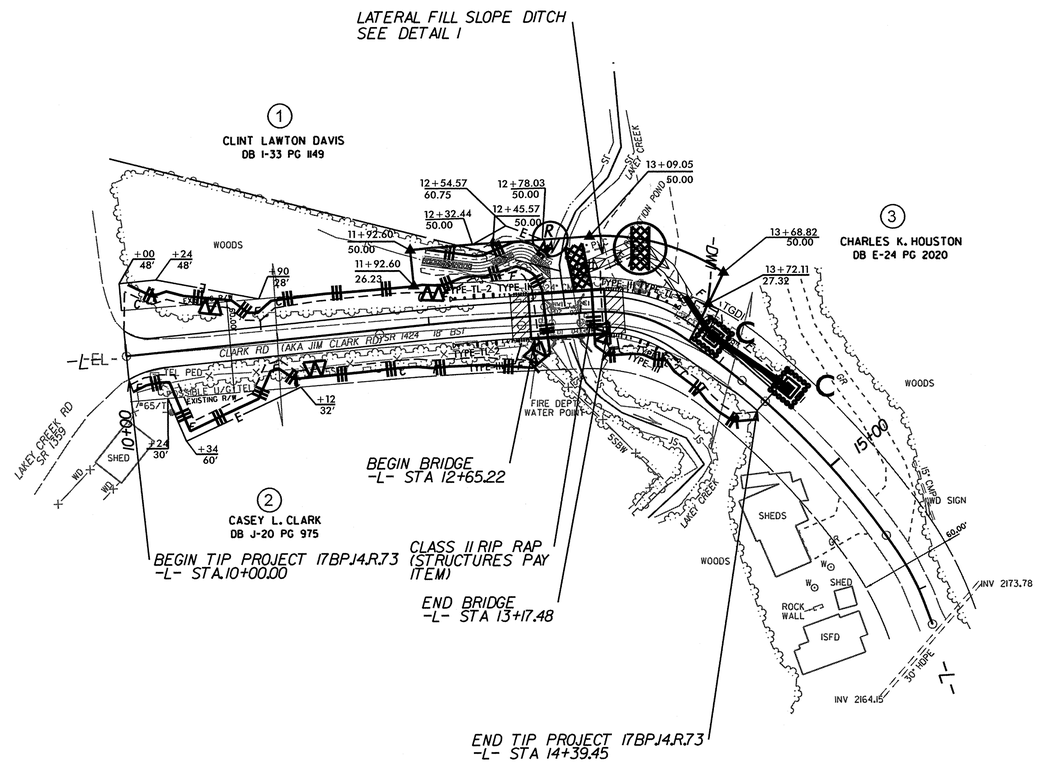

DETAIL 1

LATERAL FILL SLOPE 'V' DITCH

(Not to Scale)

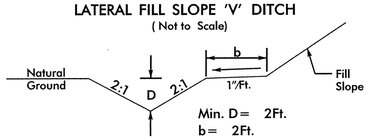

FROM –L– STA. 13+10 TO STA. 13+60 LT

STATE	STATE PROJECT REFERENCE NO.	SHEET NO.	TOTAL SHEETS
N.C.	17BP.14.R.73	RF-1	
STATE PROJ. NO.	F.A. PROJ. NO.	DESCRIPTION	

PLANTING DETAILS

SEEDLING / LINER BAREROOT PLANTING DETAIL

HEALING IN

1. Locate a healing-in site in a shady, well protected area.
2. Excavate a flat bottom trench 12 inches deep and provide drainage.

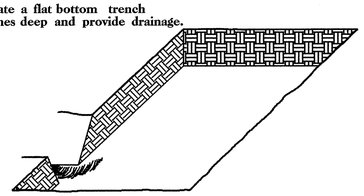

3. Backfill the trench with 2 inches well rotted sawdust. Place a 2 inch layer of well rotted sawdust at a sloping angle at one end of the trench.

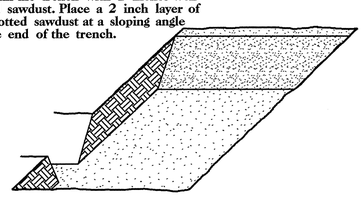

4. Place a single layer of plants against the sloping end so that the root collar is at ground level.

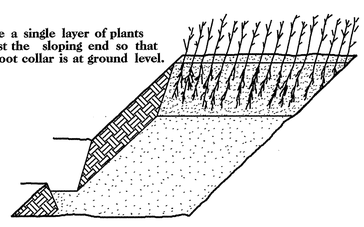

5. Place a 2 inch layer of well rotted sawdust over the roots maintaining a sloping angle.

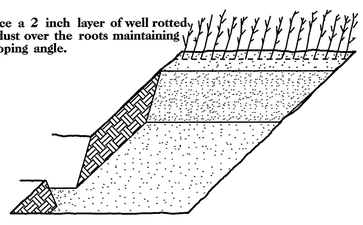

6. Repeat layers of plants and sawdust as necessary and water thoroughly.

DIBBLE PLANTING METHOD
USING THE KBC PLANTING BAR

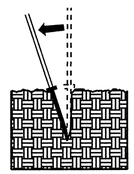

1. Insert planting bar as shown and pull handle toward planter.

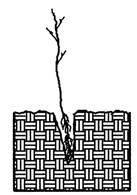

2. Remove planting bar and place seedling at correct depth.

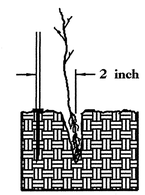

3. Insert planting bar 2 inches toward planter from seedling.

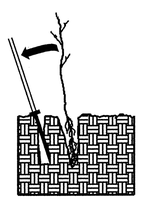

4. Pull handle of bar toward planter, firming soil at bottom.

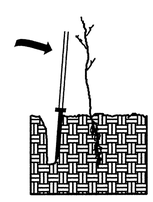

5. Push handle forward firming soil at top.

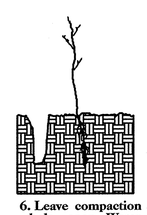

6. Leave compaction hole open. Water thoroughly.

PLANTING NOTES:

PLANTING BAG
During planting, seedlings shall be kept in a moist canvas bag or similar container to prevent the root systems from drying.

KBC PLANTING BAR
Planting bar shall have a blade with a triangular cross section, and shall be 12 inches long, 4 inches wide and 1 inch thick at center.

ROOT PRUNING
All seedlings shall be root pruned, if necessary, so that no roots extend more than 10 inches below the root collar.

REFORESTATION

☐ TREE REFORESTATION SHALL BE PLANTED 6 FT. TO 10 FT. ON CENTER, RANDOM SPACING, AVERAGING 8 FT. ON CENTER, APPROXIMATELY 680 PLANTS PER ACRE.

REFORESTATION

MIXTURE, TYPE, SIZE, AND FURNISH SHALL CONFORM TO THE FOLLOWING:

25%	LIRIODENDRON TULIPIFERA	TULIP POPLAR	12 in - 18 in BR
25%	PLATANUS OCCIDENTALIS	SYCAMORE	12 in - 18 in BR
25%	FRAXINUS PENNSYLVANICA	GREEN ASH	12 in - 18 in BR
25%	BETULA NIGRA	RIVER BIRCH	12 in - 18 in BR

REFORESTATION DETAIL SHEET

N.C.D.O.T. - ROADSIDE ENVIRONMENTAL UNIT

STATE OF NORTH CAROLINA
DIVISION OF HIGHWAYS
CROSS SECTION SUMMARY

PHASE I – ROADWAY

LOCATION	UNCLASSIFIED EXCAVATION	EMBT+%
-L- 10+00 TO 10+50	8	22
-L- 10+50 TO 11+00	13	22
-L- 11+00 TO 11+50	28	0
-L- 11+50 TO 12+00	18	3
-L- 12+00 TO 12+50	21	105
-L- 12+50 TO 13+00	19	110
-L- 13+00 TO 13+50	4	26
-L- 13+50 TO 14+00	12	30
-L- 14+00 TO 14+39.45	8	11
TOTALS	131	329

PHASE II – ROADWAY

LOCATION	UNCLASSIFIED EXCAVATION	EMBT+%
-L- 10+00 TO 10+50	9	68
-L- 10+50 TO 11+00	8	68
-L- 11+00 TO 11+50	24	0
-L- 11+50 TO 12+00	20	2
-L- 12+00 TO 12+50	4	55
-L- 12+50 TO 13+00	18	53
-L- 13+00 TO 13+50	18	28
-L- 13+50 TO 14+00	8	28
-L- 14+00 TO 14+39.45	8	0
TOTALS	117	302

Note: Embankment column does not include fill for undercut.

Approximate quantities only. Unclassified excavation, borrow excavation, shoulder borrow, fine grading, clearing and grubbing, breaking of existing pavement and removal of existing pavement will be paid for at the lump sum price for "Grading".

9/2/99
3:41:29 PM
R:\3215\Bridge321\Roadway\Proj\17BP14R73_RDY_TYP.dgn

0 10 20	PROJ. REFERENCE NO.	SHEET NO.
	17BP.14.R.73	X-1

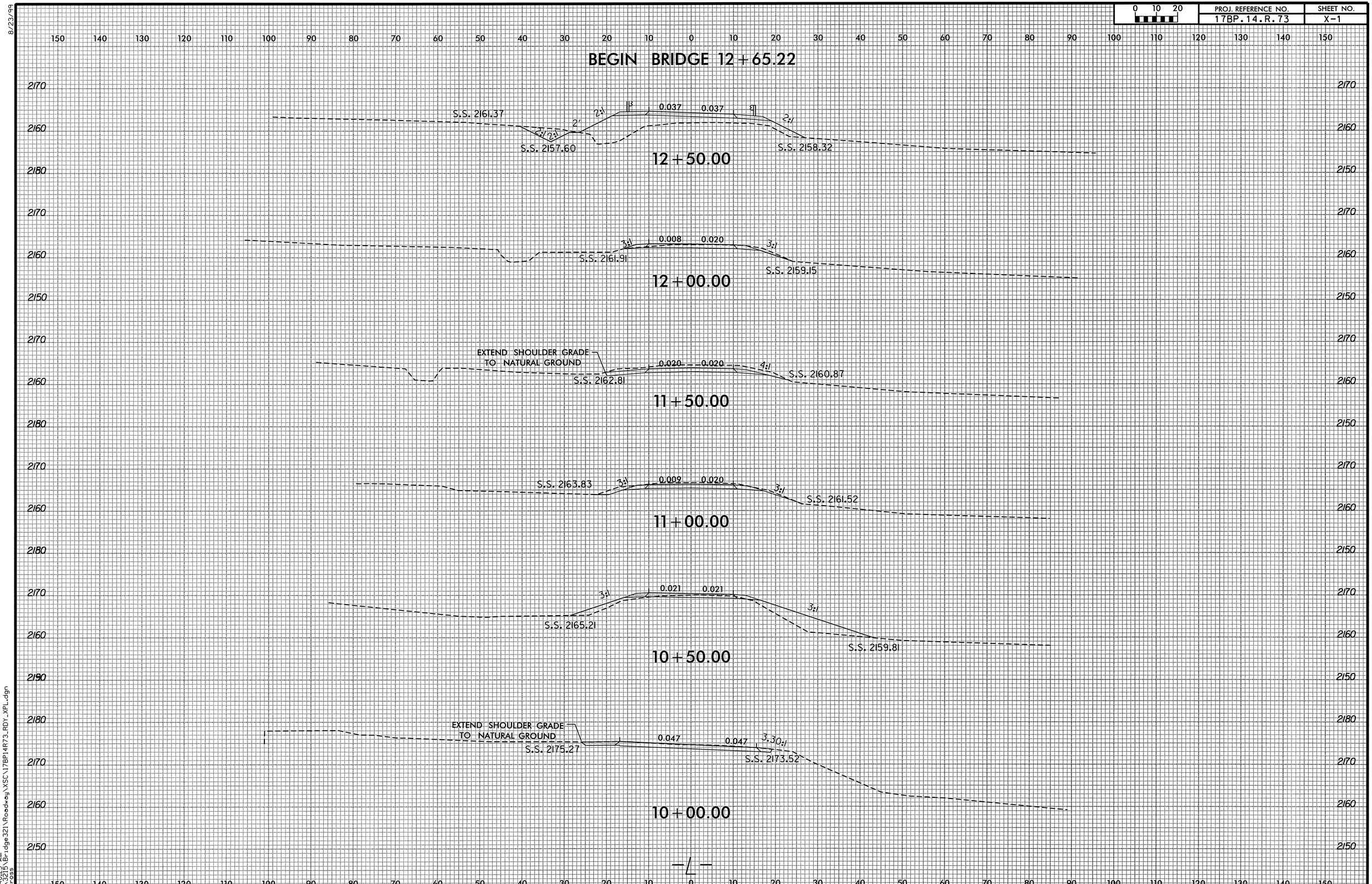

8/23/99

10:40:23 AM
R:\3215\Bridge321\Roadway\XSC\17BP14R73_RDY_XPL.dgn
Darross

0 10 20	PROJ. REFERENCE NO.	SHEET NO.
	17BP.14.R.73	X-2

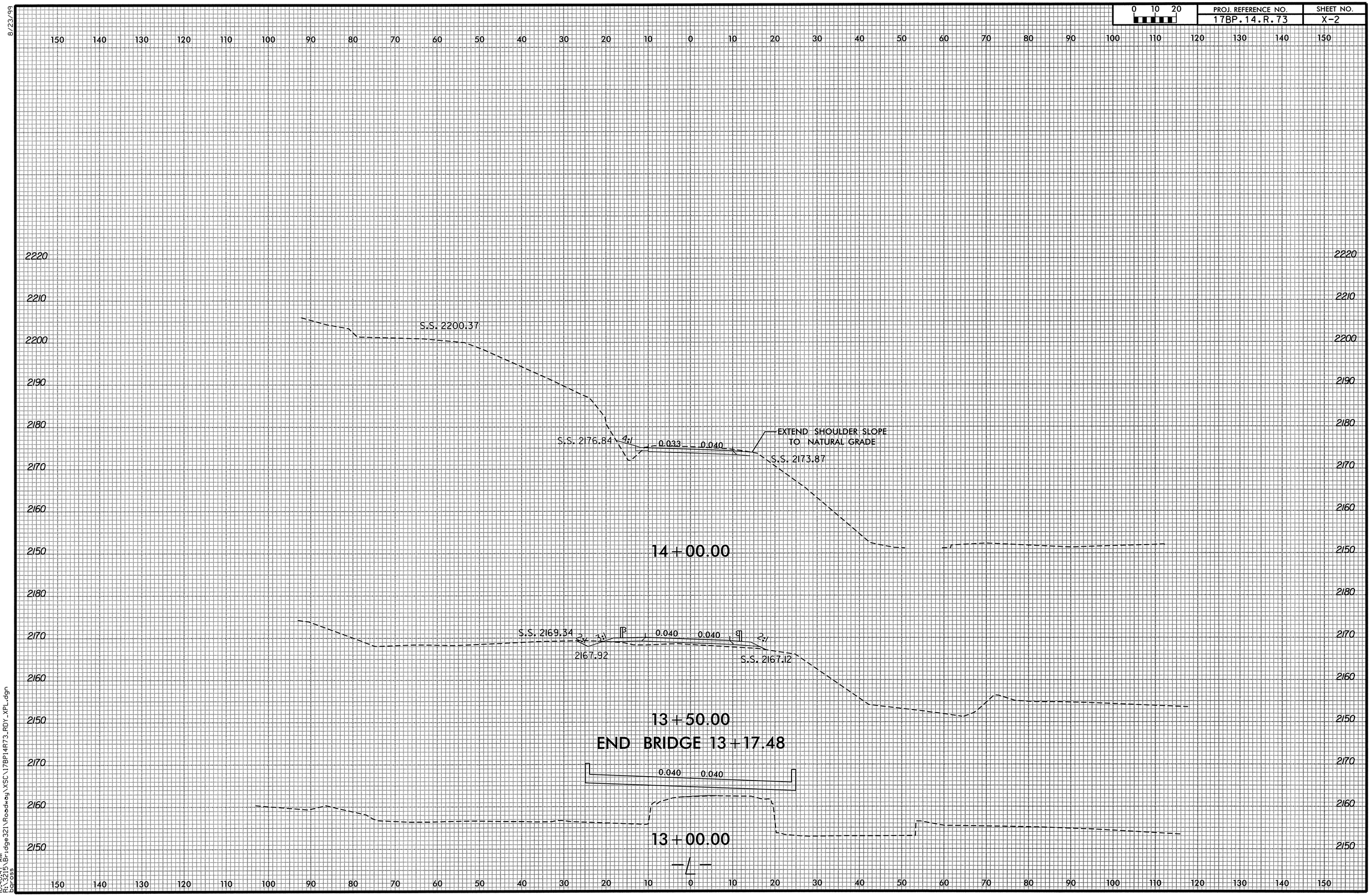

8/23/99

10:40:47 AM
R:\3215\Bridge321\Roadway\XSC\17BP14R73_RDY_XPL.dgn
bgross

0 10 20	PROJ. REFERENCE NO.	SHEET NO.
	17BP.14.R.73	X-3

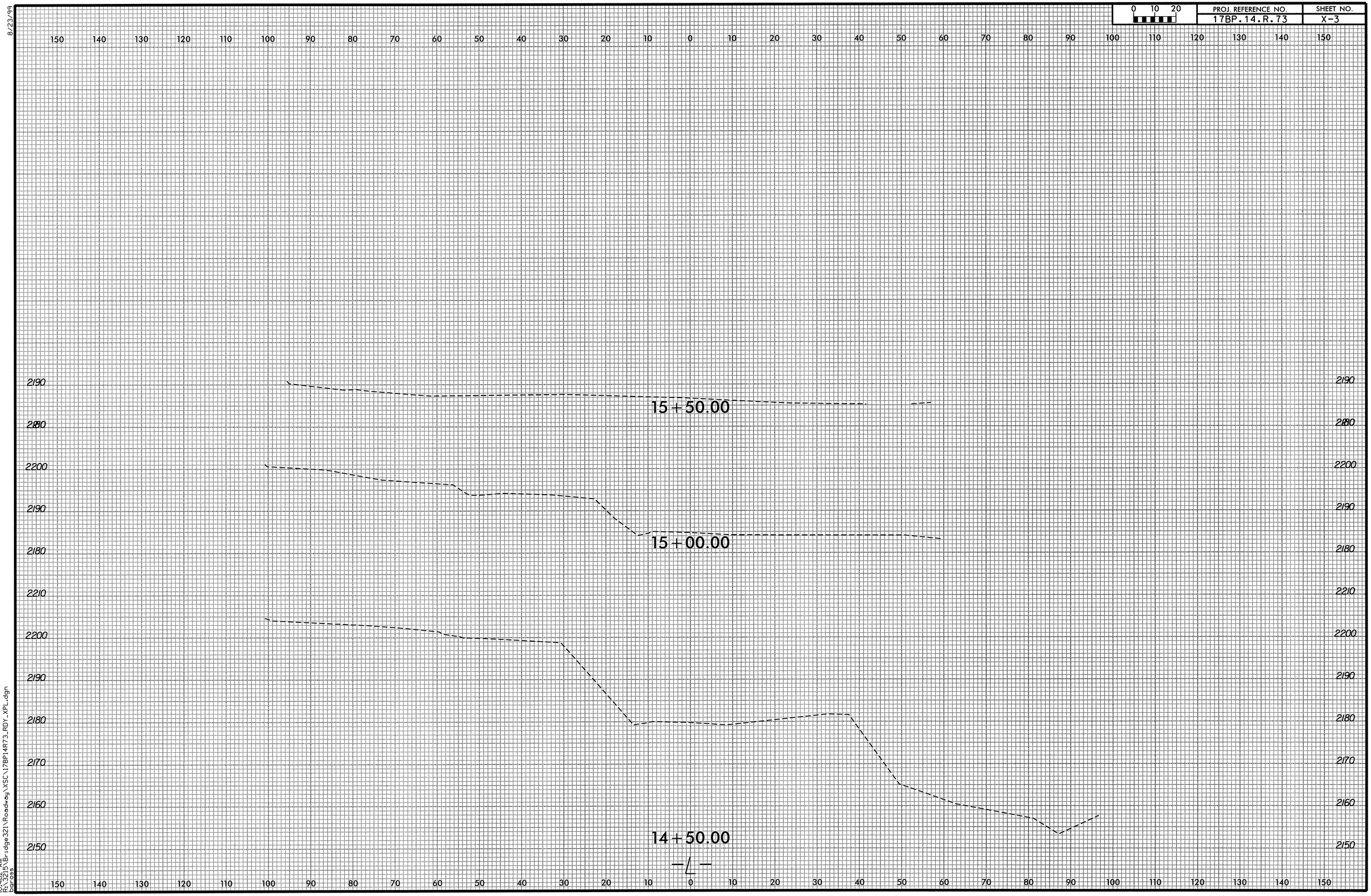

8/23/99

10:41:12 AM
R:\3215\Bridge321\Roadway\XSC\17BP14R73_RDY_XPL.dgn
Across

TIP PROJECT: 17BP.14.R.73

CONTRACT: DN00193

STATE OF NORTH CAROLINA
DIVISION OF HIGHWAYS

MACON COUNTY

LOCATION: BRIDGE 321 OVER LAKEY CREEK ON SR 1424 (CLARK ROAD)

TYPE OF WORK: GRADING, PAVING, DRAINAGE & STRUCTURE

STATE	STATE PROJECT REFERENCE NO.	SHEET NO.	TOTAL SHEETS
N.C.	17BP.14.R.73	TS–0	

STATE PROJ. NO.	F.A. PROJ. NO.	DESCRIPTION
17BP.14.R.73		PE, R/W, UTIL
17BP.14.R.73		CONST

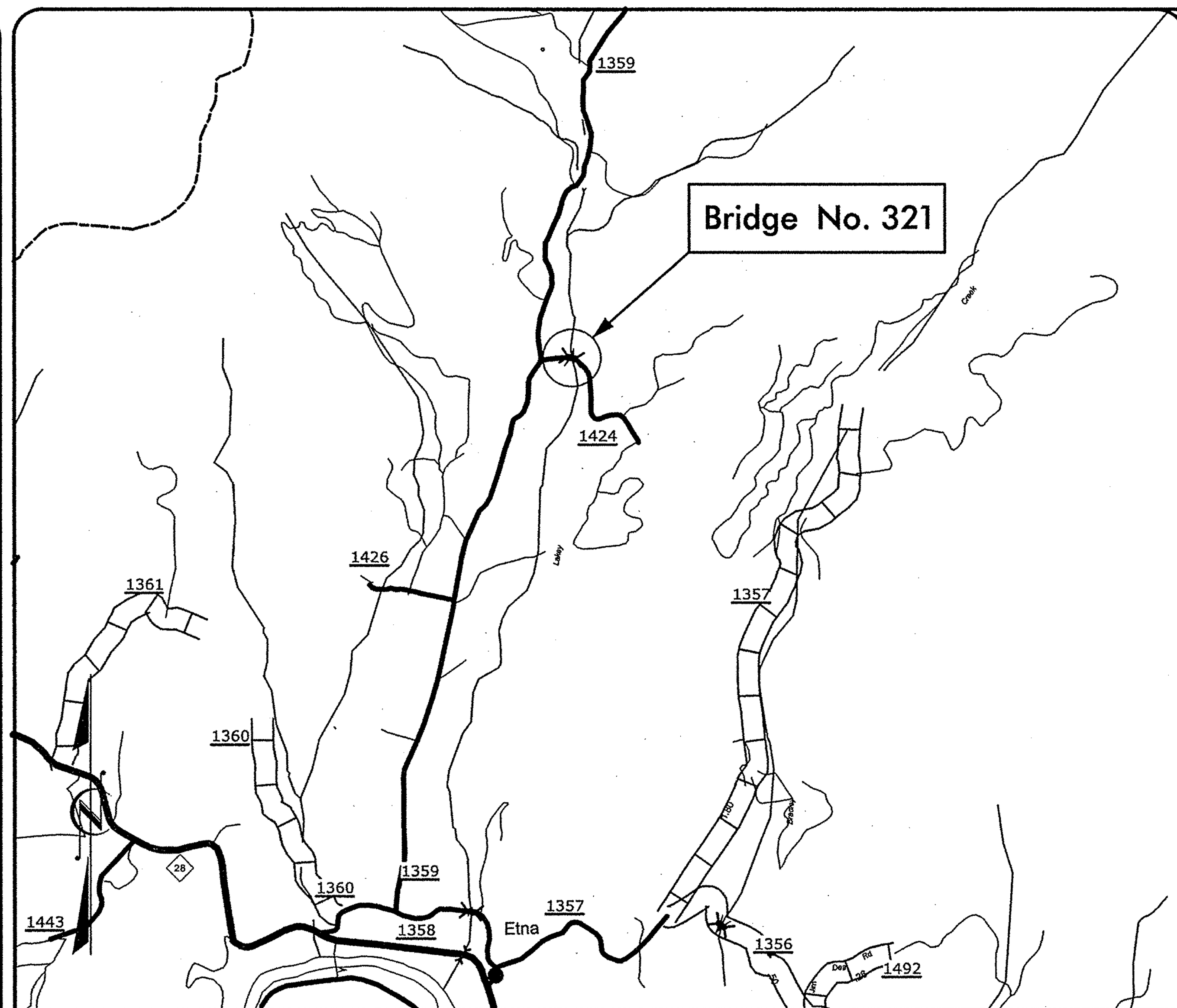

VICINITY MAP

NAD 83/ NSRS 2007

STRUCTURE

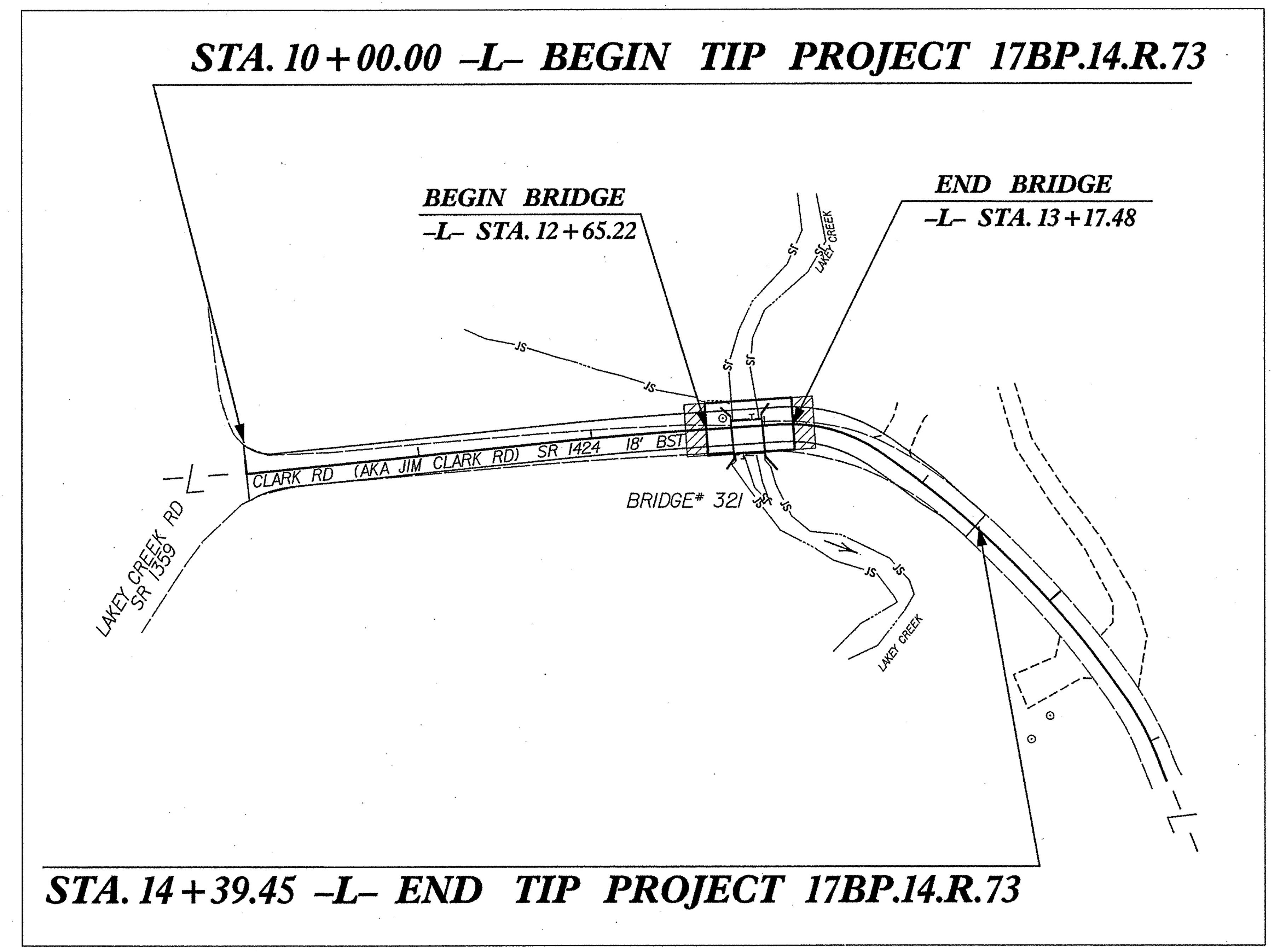

CLEARING ON THIS PROJECT SHALL BE PERFORMED TO THE LIMITS ESTABLISHED BY METHOD II.

DESIGN DATA

ADT (1995) = 10
ADT (2025) = 115

V = 20 MPH

FUNC CLASS = LOCAL SUB-REGIONAL TIER

PROJECT LENGTH

LENGTH ROADWAY TIP PROJECT 17BP.14.R.73	=	0.0732 MI
LENGTH STRUCTURE TIP PROJECT 17BP.14.R.73	=	0.0100 MI
TOTAL LENGTH TIP PROJECT 17BP.14.R.73	=	0.0832 MI

NCDOT CONTACT: JOSHUA DEYTON, P.E.
PROJECT ENGINEER

Prepared In the Office of:
Mattern & Craig
CONSULTING ENGINEERS - SURVEYORS
12 BROAD STREET
ASHEVILLE, NORTH CAROLINA 28801
(828) 254-2201 - FAX (828) 254-4562

2012 STANDARD SPECIFICATIONS

RIGHT OF WAY DATE:

LETTING DATE:
FY 2013

JAMES B. VOSO, P.E.
PROJECT ENGINEER

STEVEN A. CAMPBELL, P.E.
PROJECT DESIGN ENGINEER

BRIDGE ENGINEER

SIGNATURE: P.E.

DIVISION OF HIGHWAYS
STATE OF NORTH CAROLINA

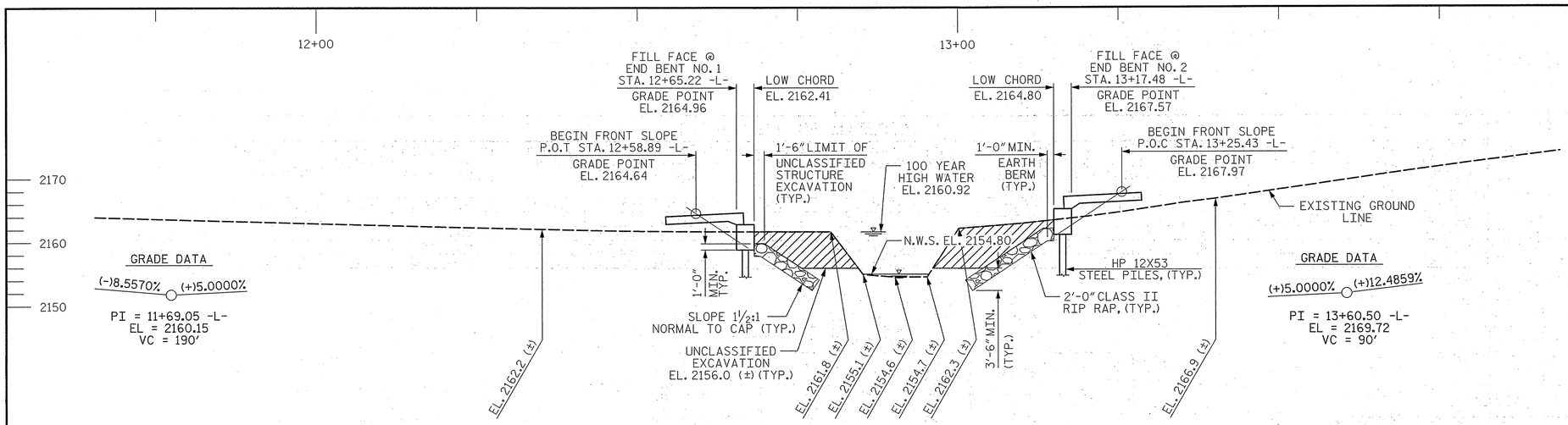

SECTION ALONG -L-

(SECTIONS AT END BENTS ARE AT RIGHT ANGLES)

HYDRAULIC DATA

DESIGN DISCHARGE	600 CFS
FREQUENCY OF DESIGN FLOOD	25 YR.
DESIGN HIGH WATER ELEVATION	2159.60
DRAINAGE AREA	1.8 SQ. MI.
BASIC DISCHARGE (Q 100)	900 CFS
BASIC HIGH WATER ELEVATION	2160.92

OVERTOPPING DATA

OVERTOPPING DISCHARGE	1450 CFS
FREQUENCY OF OVERTOPPING FLOOD	500+ YR.
OVERTOPPING FLOOD ELEVATION	2163.10

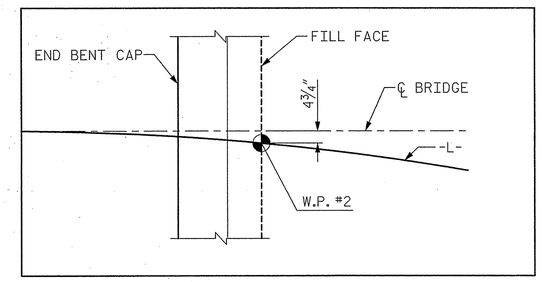

INSET SHOWING W.P. #2

NAD 83/ NSRS 2007

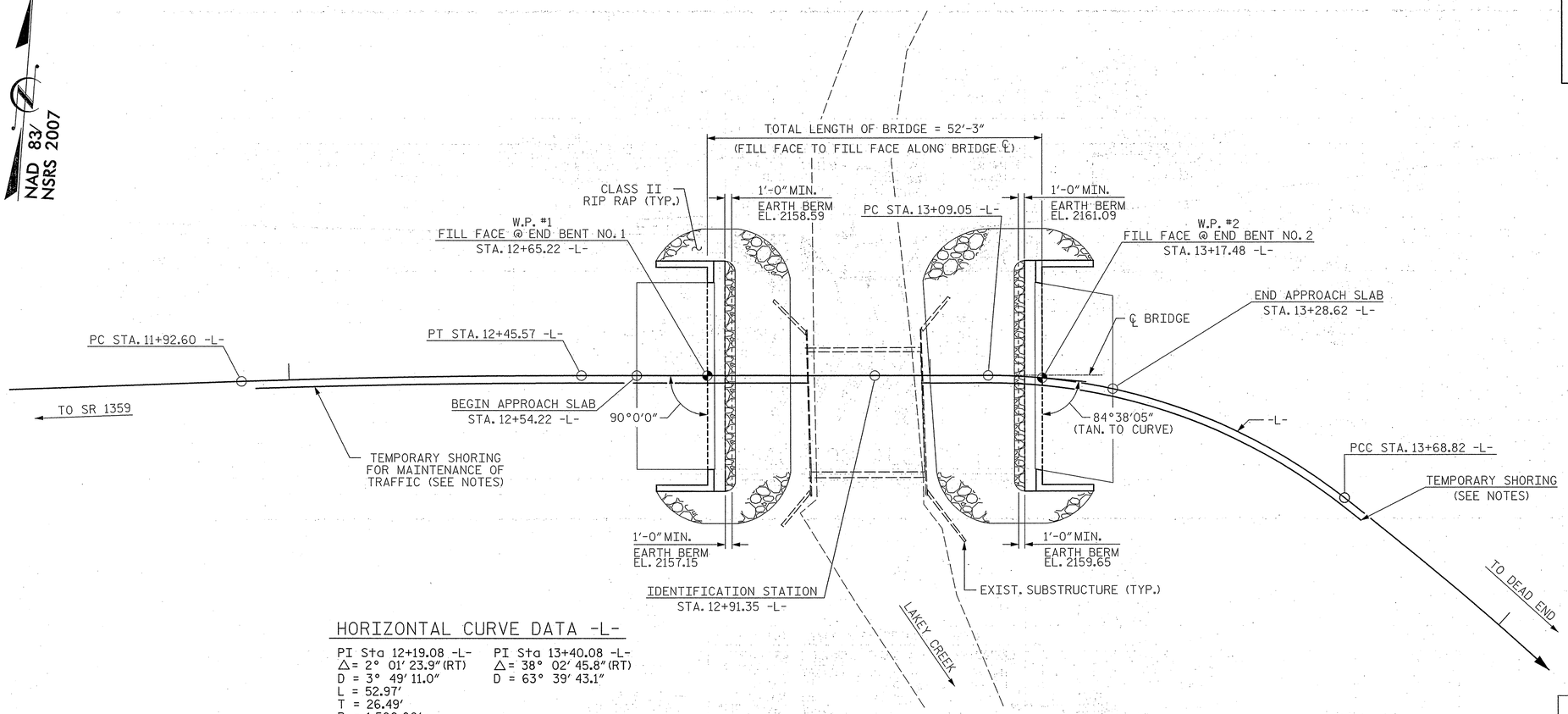

PLAN

(PILES NOT SHOWN FOR CLARITY)

HORIZONTAL CURVE DATA -L-

PI Sta 12+19.08 -L-
△= 2° 01' 23.9" (RT)
D = 3° 49' 11.0"
L = 52.97'
T = 26.49'
R = 1,500.00'

PI Sta 13+40.08 -L-
△= 38° 02' 45.8" (RT)
D = 63° 39' 43.1"

PROJECT NO. 17BP.14.R.73

MACON COUNTY

STATION: 12+91.35 -L-

SHEET 1 OF 2 REPLACES BRIDGE NO. 321

STATE OF NORTH CAROLINA
DEPARTMENT OF TRANSPORTATION
RALEIGH

GENERAL DRAWING FOR BRIDGE ON SR 1424 OVER LAKEY CREEK BETWEEN SR 1359 AND DEAD END

NORTH CAROLINA PROFESSIONAL SEAL 14808 ENGINEER STEVEN A. CAMPBELL
6/21/13

Prepared in the Office of:
Mattern & Craig
CONSULTING ENGINEERS - SURVEYORS
12 BROAD STREET
ASHEVILLE, NORTH CAROLINA 28801
(828) 254-2201 - FAX (828) 254-4562

REVISIONS						SHEET NO.
NO.	BY:	DATE:	NO.	BY:	DATE:	S-1
1			3			TOTAL SHEETS
2			4			14

DRAWN BY :	PFC	DATE :	06/13
CHECKED BY :	CMT	DATE :	06/13

BENCHMARK: B.M. #1: RR SPIKE IN 20" POPLAR TREE 17.37' LT. OF -L- STA. 13+36.24, EL. 2167.32

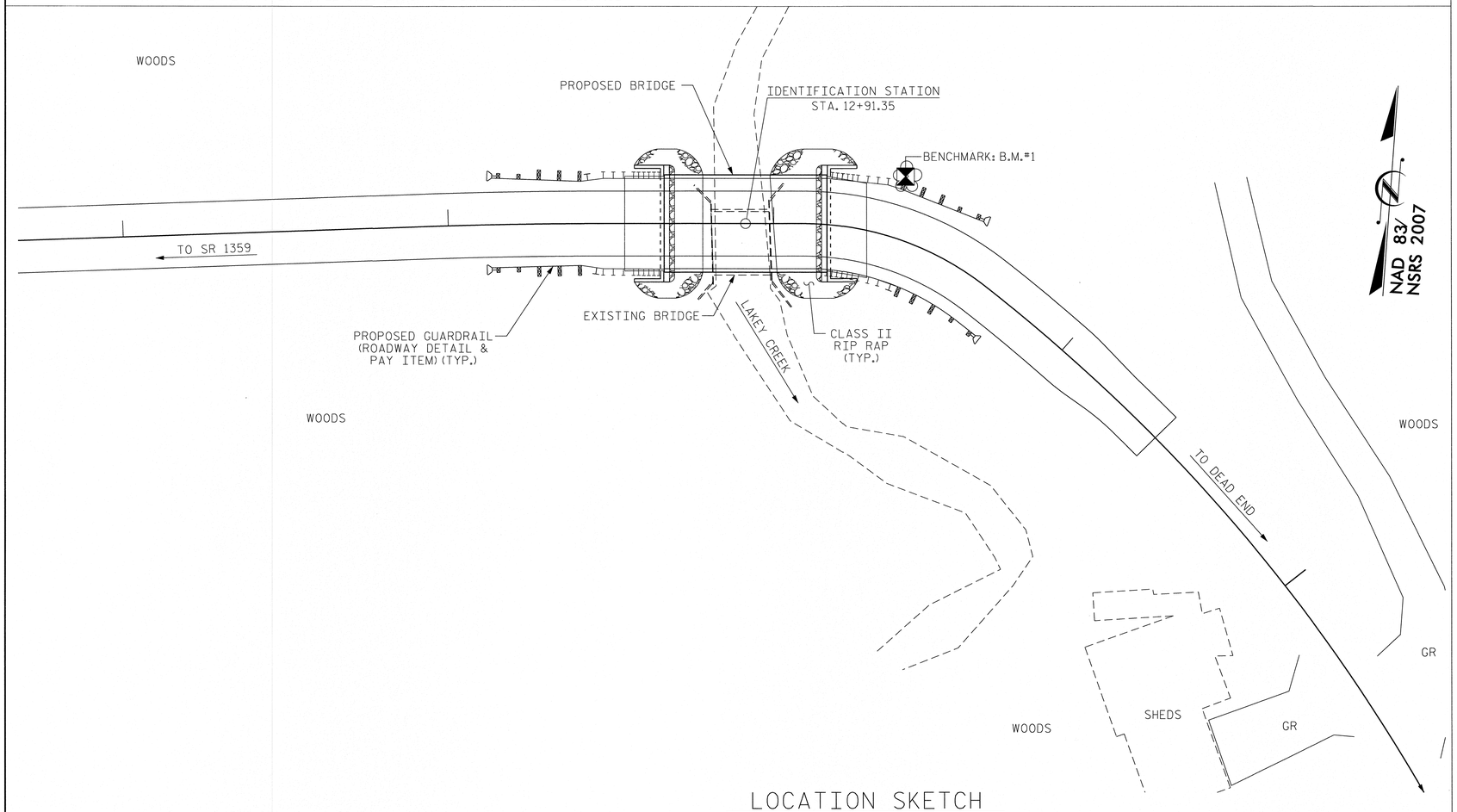

LOCATION SKETCH

NO KNOWN UTILITY CONFLICTS.

NOTES:

ASSUMED LIVE LOAD = HL-93 OR ALTERNATE LOADING.

FOR EROSION CONTROL MEASURES, SEE EROSION CONTROL PLANS.

THIS STRUCTURE HAS BEEN DESIGNED IN ACCORDANCE WITH THE AASHTO LRFD BRIDGE DESIGN SPECIFICATIONS.

THE EXISTING STRUCTURE CONSISTING OF 1 SPAN AT 20'-0", 19'-1" CLEAR ROADWAY WIDTH, TIMBER FLOOR ON TIMBER JOISTS, ON TIMBER CAPS WITH TIMBER POSTS AND SILLS, AT EXISTING CROSSING FOR PROPOSED STRUCTURE, SHALL BE REMOVED. THE EXISTING BRIDGE IS CURRENTLY POSTED BELOW THE LEGAL LOAD LIMIT. SHOULD THE STRUCTURAL INTEGRITY OF THE BRIDGE FURTHER DETERIORATE, THE LOAD LIMIT MAY BE REDUCED AS FOUND NECESSARY DURING THE LIFE OF THE PROJECT.

REMOVAL OF THE EXISTING BRIDGE SHALL BE PERFORMED AS NOT TO ALLOW DEBRIS TO FALL INTO THE WATER. THE CONTRACTOR SHALL REMOVE THE BRIDGE AND SUBMIT PLANS FOR DEMOLITION IN ACCORDANCE WITH ARTICLE 402-2 OF THE STANDARD SPECIFICATIONS.

THE MATERIAL SHOWN IN THE CROSS-HATCHED AREA SHALL BE EXCAVATED FOR A DISTANCE OF 23 FT± EACH SIDE OF CENTERLINE ROADWAY AS DIRECTED BY THE ENGINEER. THIS WORK WILL BE PAID FOR AT THE CONTRACT LUMP SUM PRICE FOR UNCLASSIFIED STRUCTURE EXCAVATION. SEE SECTION 412 OF THE STANDARD SPECIFICATIONS.

THE SUBSTRUCTURE OF THE EXISTING BRIDGE INDICATED ON THE PLANS IS FROM THE BEST INFORMATION AVAILABLE. SINCE THIS INFORMATION IS SHOWN FOR THE CONVENIENCE OF THE CONTRACTOR, THE CONTRACTOR SHALL HAVE NO CLAIM WHATSOEVER AGAINST THE DEPARTMENT OF TRANSPORTATION FOR ANY DELAYS OR ADDITIONAL COSTS INCURRED BASED ON DIFFERENCES BETWEEN THE EXISTING BRIDGE SUBSTRUCTURE SHOWN ON THE PLANS AND THE ACTUAL CONDITIONS AT THE PROJECT SITE.

FOR LIMITS OF TEMPORARY SHORING FOR MAINTENANCE OF TRAFFIC, SEE TRAFFIC CONTROL PLANS. FOR PAY ITEM FOR TEMPORARY SHORING FOR MAINTENANCE OF TRAFFIC, SEE ROADWAY PLANS.

FOR PILES, SEE SECTION 450 OF THE STANDARD SPECIFICATIONS.

PILES AT END BENT NO. 1 AND END BENT NO. 2 ARE DESIGNED FOR A FACTORED RESISTANCE OF 85 TONS PER PILE.

DRIVE PILES AT END BENT NO. 1 AND END BENT NO. 2 TO A REQUIRED DRIVING RESISTANCE OF 145 TONS PER PILE.

STEEL H-PILE POINTS ARE REQUIRED FOR ALL STEEL H-PILES AT END BENT NO. 1 AND END BENT NO. 2. FOR STEEL PILE POINTS, SEE SECTION 450 OF THE STANDARD SPECIFICATIONS.

INSTALL PILES AT END BENT NO. 1 TO A TIP ELEVATION NO HIGHER THAN 2,143 FT. IF NECESSARY, PREDRILL PILE LOCATIONS AT END BENT 1 TO ELEVATION 2,148 FEET WITH EQUIPMENT THAT WILL RESULT IN A MAXIMUM PREDRILLING DIAMETER IF 12 INCHES. FOR PREDRILLING FOR PILES, SEE SECTION 450 OF THE STANDARD SPECIFICATIONS.

INSTALL PILES AT END BENT NO. 2 TO A TIP ELEVATION NO HIGHER THAN 2,145 FT. IF NECESSARY, PREDRILL PILE LOCATIONS AT END BENT 1 TO ELEVATION 2,150 FEET WITH EQUIPMENT THAT WILL RESULT IN A MAXIMUM PREDRILLING DIAMETER IF 12 INCHES. FOR PREDRILLING FOR PILES, SEE SECTION 450 OF THE STANDARD SPECIFICATIONS.

TESTING THE FIRST PRODUCTION PILE WITH THE PDA DURING DRIVING, RESTRIKING OR REDRIVING MAY BE REQUIRED. THE ENGINEER WILL DETERMINE THE NEED FOR PDA TESTING. FOR PDA TESTING, SEE SECTION 450 OF THE STANDARD SPECIFICATIONS (AND FOR PILE DRIVING CRITERIA, SEE PILE DRIVING CRITERIA PROVISION).

FOR SUBMITTAL OF WORKING DRAWINGS, SEE SPECIAL PROVISIONS.

FOR FALSEWORK AND FORMWORK, SEE SPECIAL PROVISIONS.

FOR CRANE SAFETY, SEE SPECIAL PROVISIONS.

FOR OTHER DESIGN DATA AND GENERAL NOTES, SEE SHEET SN.

THIS STRUCTURE HAS BEEN DESIGNED IN ACCORDANCE WITH "HEC 18-EVALUATING SCOUR AT BRIDGES."

FOR GROUT FOR STRUCTURES, SEE SPECIAL PROVISIONS.

THIS BRIDGE IS LOCATED IN SEISMIC ZONE 1.

ASPHALT WEARING SURFACE IS INCLUDED IN THE ROADWAY QUANTITY ON ROADWAY PLANS.

TOTAL BILL OF MATERIAL

	REMOVAL OF EXISTING STRUCTURE	PDA TESTING	UNCLASSIFIED STRUCTURE EXCAVATION	PREDRILLING FOR PILES	CLASS A CONCRETE	BRIDGE APPROACH SLABS	REINFORCING STEEL	HP 12X53 STEEL PILES		STEEL PILE POINTS	VERTICAL CONCRETE BARRIER RAIL	RIP RAP CLASS II (2'-0" THICK)	GEOTEXTILE FOR DRAINAGE	ELASTOMERIC BEARINGS	3'-0" X 1'-9" PRESTRESSED CONCRETE CORED SLAB UNITS	
	LUMP SUM	EACH	LUMP SUM	LIN. FT.	CU. YDS.	LUMP SUM	LBS.	NO.	LIN. FT.	EACH	LIN. FT.	TONS	SQ. YD.	LUMP SUM	NO.	LIN. FT.
SUPERSTRUCTURE	LUMP SUM					LUMP SUM					100.25			LUMP SUM	10	500
END BENT NO. 1			LUMP SUM	55	20.0		2426	5	300	5		61	68			
END BENT NO. 2			LUMP SUM	55	20.0		2426	5	175	5		86	96			
TOTAL	LUMP SUM	1	LUMP SUM	110	40.0	LUMP SUM	4852	10	475	10	100.25	147	164	LUMP SUM	10	500

PROJECT NO. 17BP.14.R.73

MACON COUNTY

STATION: 12+91.35 -L-

SHEET 2 OF 2 REPLACES BRIDGE NO. 321

STATE OF NORTH CAROLINA
DEPARTMENT OF TRANSPORTATION
RALEIGH

GENERAL DRAWING
FOR BRIDGE ON
SR 1424 OVER LAKEY CREEK
BETWEEN SR 1359 AND DEAD END

NORTH CAROLINA PROFESSIONAL ENGINEER SEAL 14309 STEVEN A. CAMPBELL
7/25/14

REVISIONS						SHEET NO.
NO.	BY:	DATE:	NO.	BY:	DATE:	S-2
1			3			TOTAL SHEETS
2			4			14

Prepared in the Office of:
Mattern & Craig
CONSULTING ENGINEERS - SURVEYORS
12 BROAD STREET
ASHEVILLE, NORTH CAROLINA 28801
(828) 254-2201 - FAX (828) 254-4562

DRAWN BY :	PFC	DATE :	06/13
CHECKED BY :	CMT	DATE :	06/13

LOAD AND RESISTANCE FACTOR RATING (LRFD) SUMMARY FOR PRESTRESSED CONCRETE GIRDERS

LEVEL		VEHICLE	WEIGHT (W) (TONS)	CONTROLLING LOAD RATING	MINIMUM RATING FACTORS (RF)	TONS = W X RF	STRENGTH I LIMIT STATE											SERVICE III LIMIT STATE						COMMENT NUMBER
							LIVELOAD FACTORS	MOMENT					SHEAR					LIVELOAD FACTORS	MOMENT					
								DISTRIBUTION FACTORS (DF)	RATING FACTOR	SPAN	GIRDER LOCATION	DISTANCE FROM LEFT END OF SPAN (ft)	DISTRIBUTION FACTORS (DF)	RATING FACTOR	SPAN	GIRDER LOCATION	DISTANCE FROM LEFT END OF SPAN (ft)		DISTRIBUTION FACTORS (DF)	RATING FACTOR	SPAN	GIRDER LOCATION	DISTANCE FROM LEFT END OF SPAN (ft)	
DESIGN LOAD RATING		HL-93(Inv)	N/A	1	1.394	--	1.75	0.276	1.57	50'	EL	24.5	0.531	1.39	50'	EL	2.45	0.80	0.276	1.44	50'	EL	24.5	
		HL-93(Opr)	N/A	--	1.807	--	1.35	0.276	2.03	50'	EL	24.5	0.531	1.81	50'	EL	2.45	N/A	--	--	--	--	--	
		HS-20(Inv)	36.000	2	1.667	60.007	1.75	0.276	1.95	50'	EL	24.5	0.531	1.67	50'	EL	2.45	0.80	0.276	1.79	50'	EL	24.5	
		HS-20(Opr)	36.000	--	2.161	77.787	1.35	0.276	2.52	50'	EL	24.5	0.531	2.16	50'	EL	2.45	N/A	--	--	--	--	--	
LEGAL LOAD RATING	SV	SNSH	13.500	--	3.635	49.079	1.4	0.276	4.95	50'	EL	24.5	0.531	4.7	50'	EL	2.45	0.80	0.276	3.64	50'	EL	24.5	
		SNGARBS2	20.000	--	2.871	57.42	1.4	0.276	3.91	50'	EL	24.5	0.531	3.42	50'	EL	2.45	0.80	0.276	2.87	50'	EL	24.5	
		SNAGRIS2	22.000	--	2.778	61.109	1.4	0.276	3.78	50'	EL	19.6	0.531	3.21	50'	EL	2.45	0.80	0.276	2.78	50'	EL	24.5	
		SNCOTTS3	27.250	--	1.814	49.418	1.4	0.276	2.47	50'	EL	24.5	0.531	2.36	50'	EL	2.45	0.80	0.276	1.81	50'	EL	24.5	
		SNAGGRS4	34.925	--	1.577	55.063	1.4	0.276	2.15	50'	EL	24.5	0.531	2.01	50'	EL	2.45	0.80	0.276	1.58	50'	EL	24.5	
		SNS5A	35.550	--	1.537	54.657	1.4	0.276	2.09	50'	EL	24.5	0.531	2.07	50'	EL	2.45	0.80	0.276	1.54	50'	EL	24.5	
		SNS6A	39.950	--	1.438	57.43	1.4	0.276	1.96	50'	EL	24.5	0.531	1.91	50'	EL	2.45	0.80	0.276	1.44	50'	EL	24.5	
		SNS7B	42.000	--	1.370	57.54	1.4	0.276	1.87	50'	EL	24.5	0.531	1.91	50'	EL	2.45	0.80	0.276	1.37	50'	EL	24.5	
	TTST	TNAGRIT3	33.000	--	1.761	58.118	1.4	0.276	2.4	50'	EL	24.5	0.531	2.25	50'	EL	2.45	0.80	0.276	1.76	50'	EL	24.5	
		TNT4A	33.075	--	1.777	58.759	1.4	0.276	2.42	50'	EL	24.5	0.531	2.17	50'	EL	2.45	0.80	0.276	1.78	50'	EL	24.5	
		TNT6A	41.600	--	1.480	61.558	1.4	0.276	2.01	50'	EL	24.5	0.531	2.08	50'	EL	2.45	0.80	0.276	1.48	50'	EL	24.5	
		TNT7A	42.000	--	1.502	63.087	1.4	0.276	2.05	50'	EL	24.5	0.531	1.94	50'	EL	2.45	0.80	0.276	1.50	50'	EL	24.5	
		TNT7B	42.000	--	1.566	65.773	1.4	0.276	2.13	50'	EL	24.5	0.531	1.84	50'	EL	2.45	0.80	0.276	1.57	50'	EL	24.5	
		TNAGRIT4	43.000	--	1.486	63.902	1.4	0.276	2.02	50'	EL	24.5	0.531	1.77	50'	EL	2.45	0.80	0.276	1.49	50'	EL	24.5	
		TNAGT5A	45.000	--	1.388	62.47	1.4	0.276	1.89	50'	EL	24.5	0.531	1.8	50'	EL	2.45	0.80	0.276	1.39	50'	EL	24.5	
		TNAGT5B	45.000	3	1.360	61.206	1.4	0.276	1.85	50'	EL	24.5	0.531	1.68	50'	EL	2.45	0.80	0.276	1.36	50'	EL	24.5	

LOAD FACTORS:

DESIGN LOAD RATING FACTORS	LIMIT STATE	γ_{DC}	γ_{DW}
	STRENGTH I	1.25	1.50
	SERVICE III	1.00	1.00

NOTES:

MINIMUM RATING FACTORS ARE BASED ON THE STRENGTH I AND SERVICE III LIMIT STATES.

ALLOWABLE STRESSES FOR SERVICE III LIMIT STATE ARE AS REQUIRED FOR DESIGN.

(#) CONTROLLING LOAD RATING

(1) DESIGN LOAD RATING (HL-93)

(2) DESIGN LOAD RATING (HS-20)

(3) LEGAL LOAD RATING **

** SEE CHART FOR VEHICLE TYPE

GIRDER LOCATION

I - INTERIOR GIRDER
EL - EXTERIOR LEFT GIRDER
ER - EXTERIOR RIGHT GIRDER

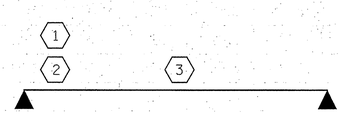

LRFR SUMMARY

PROJECT NO. 17BP.14.R.73

MACON COUNTY

STATION: 12+91.35 -L-

STATE OF NORTH CAROLINA
DEPARTMENT OF TRANSPORTATION
RALEIGH

STANDARD
LRFR SUMMARY FOR
50' CORED SLAB UNIT
90° SKEW
(NON-INTERSTATE TRAFFIC)

NORTH CAROLINA PROFESSIONAL SEAL 14350 ENGINEER STEVEN A. CAMPBELL 6/28/13

REVISIONS						SHEET NO.
NO.	BY:	DATE:	NO.	BY:	DATE:	S-3
1			3			TOTAL SHEETS
2			4			14

Prepared in the Office of: Mattern & Craig
CONSULTING ENGINEERS - SURVEYORS
12 BROAD STREET
ASHEVILLE, NORTH CAROLINA 28801
(828) 254-2201 - FAX (828) 254-4562

ASSEMBLED BY :	PFC	DATE :	06/13
CHECKED BY :	CMT	DATE :	06/13
DRAWN BY : CVC	6/10		
CHECKED BY : DNS	6/10		

$$$$$$SYSTIME$$$$$
$$$$$$$$$$$$$$$$$$$$$$$$$$DGN$$$$$$$$$$$$$$$$$$$$$$$$
$$$$USERNAME$$$$

STD. NO. 21LRFR1_90S_50L

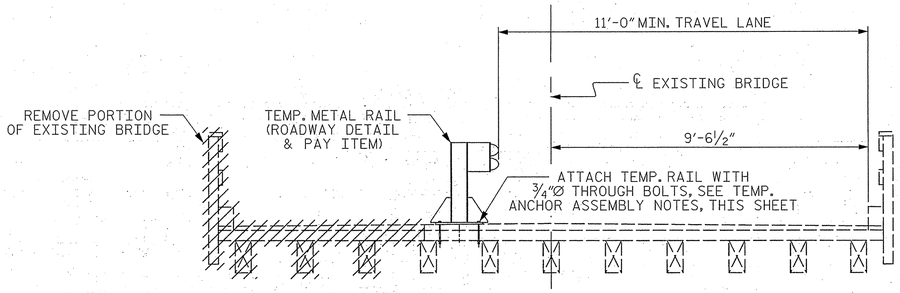

STAGE 1 CONSTRUCTION

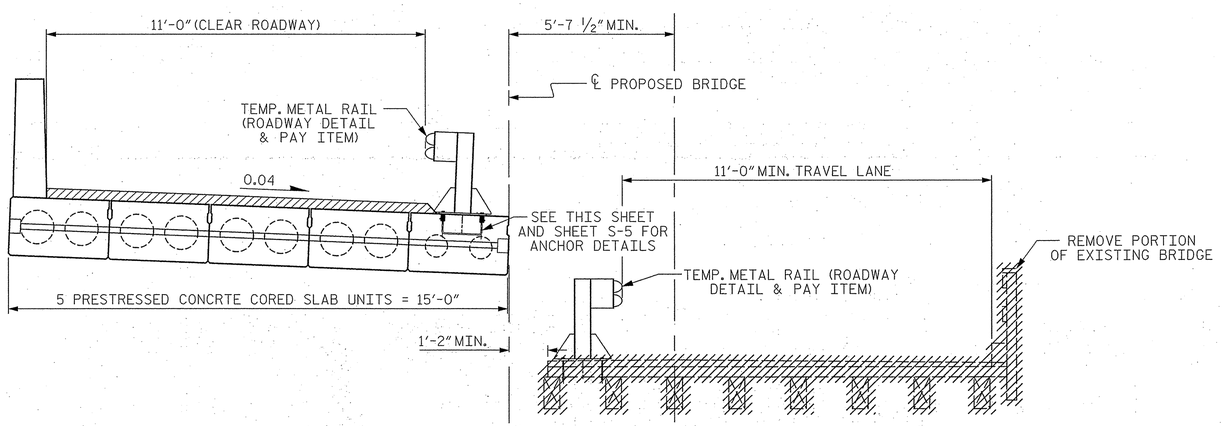

STAGE 2 CONSTRUCTION

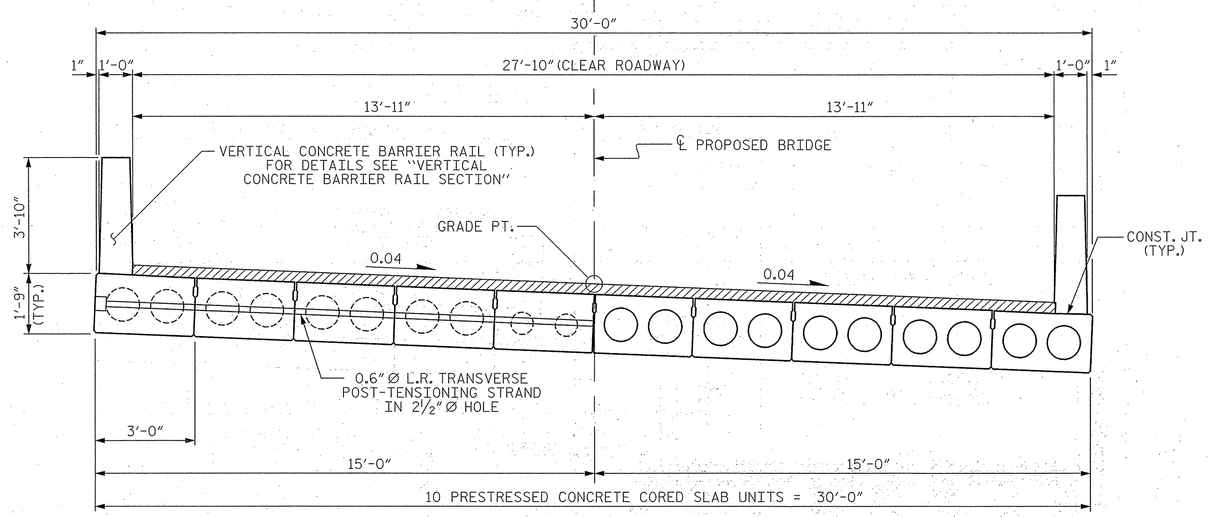

HALF SECTION
AT INTERMEDIATE DIAPHRAGMS

HALF SECTION
THROUGH VOIDS

STAGE 3 CONSTRUCTION

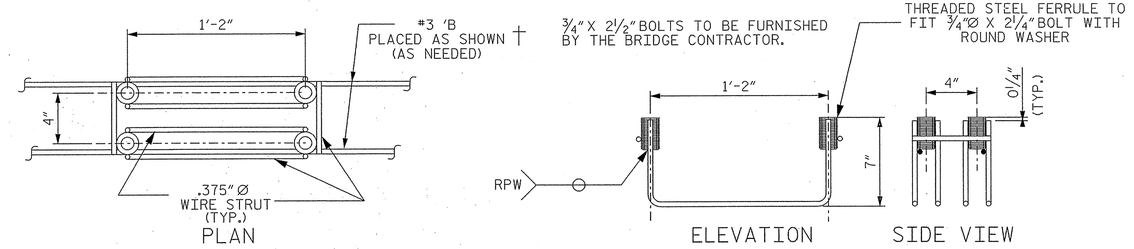

TEMPORARY GUARDRAIL ANCHOR ASSEMBLY

✻✻ ASSEMBLIES REQUIRED IN THE CORED SLABS

† THE #3 BARS ARE INCIDENTAL AND THEIR COST SHALL BE INCLUDED IN THE PRICE BID FOR THE PRESTRESSED CONCRETE CORED SLABS

ANCHOR ASSEMBLY NOTES

THE STRUCTURAL TEMPORARY ANCHOR ASSEMBLY SHALL CONSIST OF THE FOLLOWING COMPONENTS :

A. FERRULES SHALL BE MADE FROM STEEL MEETING THE REQUIREMENTS OFAASHTO M169, GRADE 12L14 AND SHALL HAVE A MINIMUM LENGTH OF THREADS OF 2" FOR ¾" FERRULES.

B. 4 - ¾" Ø X 2½" BOLTS WITH WASHERS. BOLTS SHALL CONFORM TO THE REQUIREMENTS OF ASTM A307. BOLTS AND WASHERS SHALL BE GALVANIZED. AT THE CONTRACTOR'S OPTION, STAINLESS STEEL BOLTS AND WASHERS MAY BE USED AS AN ALTERNATE FOR THE ¾" Ø X 2½" GALVANIZED BOLTS AND WASHERS. THEY SHALL CONFORM TO OR EXCEED THE MECHANICAL REQUIREMENTS OF ASTM A307. THE USE OF THIS ALTERNATE SHALL BE APPROVED BY THE ENGINEER.

C. WIRE STRUT SHOWN IN THE CONCRETE ANCHOR ASSEMBLY DETAIL IS THE MINIMUM ALLOWABLE SIZE AND SHALL HAVE A MINIMUM TENSILE STRENGTH OF 100,000 PSI. AS AN OPTION, A 7/16" Ø WIRE STRUT WITH A MINIMUM TENSILE STRENGTH OF 90,000 PSI IS ACCEPTABLE.

TEMPORARY GUARDRAIL ANCHOR ASSEMBLY WITH BOLTS SHALL BE ASSEMBLED IN THE SHOP. BOLT THREADS MAY BE RECUT AS NECESSARY TO INSURE FIT.

THE COST OF THE TEMPORARY GUARDRAIL ANCHOR ASSEMBLY COMPLETE IN PLACE SHALL BE INCLUDED IN THE UNIT CONTRACT BID FOR 3'-0" X 1'-9" PRESTRESSED CONCRETE CORED SLABS.

FERRULES TO BE PLUGGED DURING CASTING OF THE CORED SLAB UNITS AS RECOMMENDED BY THE MANUFACTURER.

AT THE CONTRACTOR'S OPTION, FERRULES WITH OPEN OR CLOSED ENDS MAY BE USED.

TEMPORARY GUARDRAIL IS A ROADWAY DETAIL AND PAY ITEM.

STAGED CONSTRUCTION NOTES

FOR TRAFFIC STAGING, SEE TRAFFIC CONTROL PLANS.

THE TEMPORARY METAL RAIL USED IN STAGE I AND STAGE II IS A ROADWAY DETAIL AND PAY ITEM.

AFTER THE REMOVAL OF TEMPORARY METAL RAIL, HOLES LEFT IN PRESTRESSED CONCRETE CORED SLAB SHALL BE FILLED WITH GROUT WITH AN EPOXY BONDING COMPOUND.

PROJECT NO. 17BP.14.R73
MACON COUNTY
STATION: 12+91.35 -L-

STATE OF NORTH CAROLINA
DEPARTMENT OF TRANSPORTATION
RALEIGH

BRIDGE CONSTRUCTION STAGING FOR MAINTENACE OF TRAFFIC

ASSEMBLED BY : PFC	DATE : 06/13
CHECKED BY : CMT	DATE : 06/13
DRAWN BY : DGE 5/09	REV. 12/11 MAA/AAC
CHECKED BY : BCH 6/09	

Prepared in the Office of: Mattern & Craig
CONSULTING ENGINEERS - SURVEYORS
12 BROAD STREET
ASHEVILLE, NORTH CAROLINA 28801
(828) 254-2201 - FAX (828) 254-4662

NORTH CAROLINA PROFESSIONAL SEAL 14309 ENGINEER STEVEN A. CAMPBELL
6/12/13

REVISIONS							SHEET NO.
NO.	BY:	DATE:	NO.	BY:	DATE:		S-4
1			3				TOTAL SHEETS
2			4				14

$$$$$$SYSTIME$$$$$
$$$$$$$$$$$$$$$$$$$$$$$$DGN$$$$$$$$$$$$$$$$$$$$$$$$
$$$$USERNAME$$$$

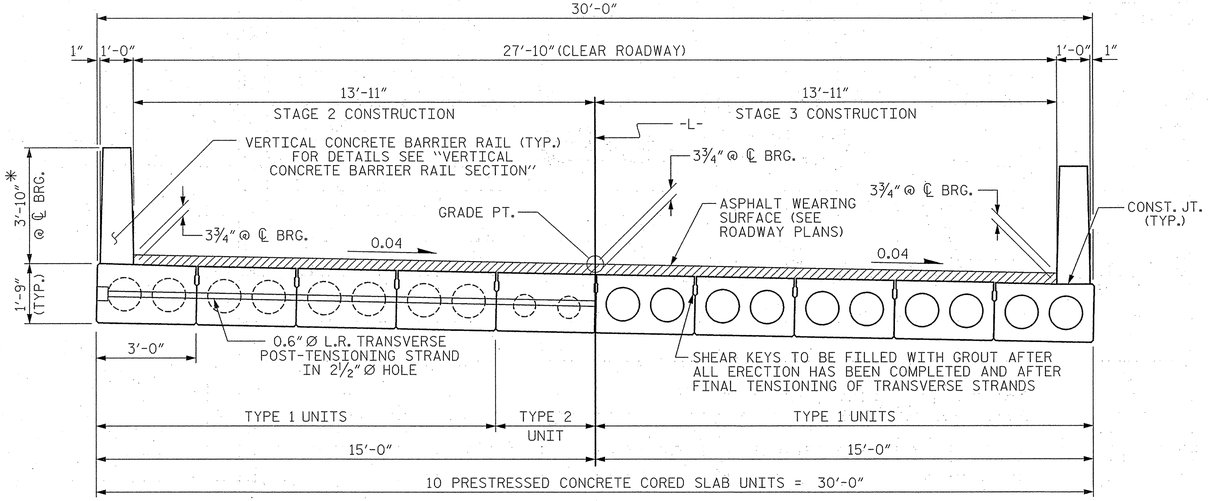

TYPICAL SECTION

* - THE MAXIMUM BARRIER RAIL HEIGHT AND ASPHALT THICKNESS IS SHOWN. THE HEIGHT OF THE BARRIER RAIL AND ASPHALT THICKNESS VARIES WHILE THE TOP OF THE BARRIER RAIL FOLLOWS THE PROFILE OF THE GUTTERLINE. FOR RAIL HEIGHT DETAILS AND ASPHALT THICKNESS SEE THE "VERTICAL CONCRETE BARRIER RAIL SECTION" DETAIL.

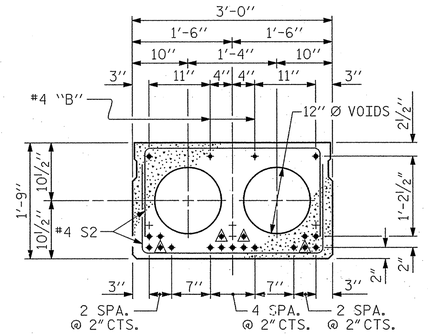

INTERIOR SLAB SECTION (50' UNIT)

(19 STRANDS REQUIRED)
(TYPE 1)

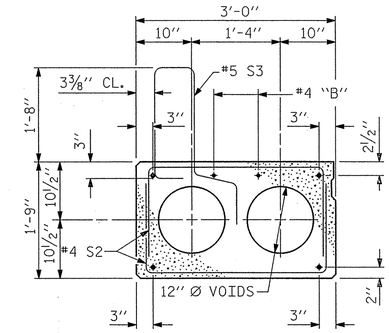

EXT. SLAB SECTION

(FOR PRESTRESSED STRAND LAYOUT, SEE INTERIOR SLAB SECTION.)

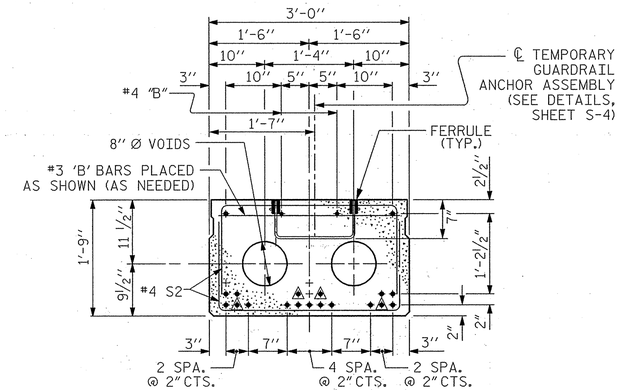

INTERIOR SLAB SECTION (50' UNIT)

(19 STRANDS REQUIRED)
(TYPE 2)

0.6" Ø LOW RELAXATION STRAND LAYOUT

▲ BOND SHALL BE BROKEN ON THESE STRANDS FOR A DISTANCE OF 6'-0" FROM END OF CORED SLAB UNIT. SEE STANDARD SPECIFICATIONS, ARTICLE 1078-7.

DEBONDING LEGEND

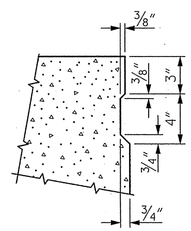

SHEAR KEY DETAIL

NOTE: OMIT SHEAR KEY ON OUTSIDE FACE OF EXTERIOR CORED SLABS.

FIXED END

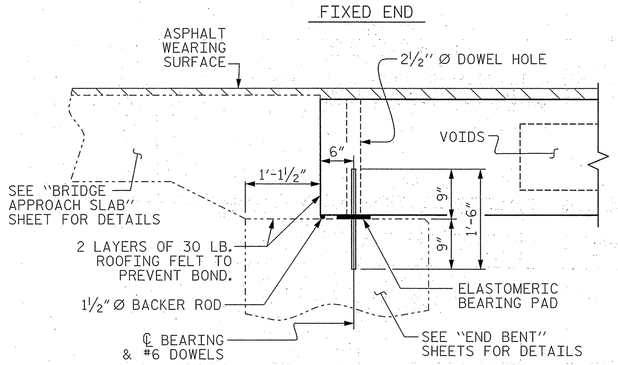

SECTION AT END BENT

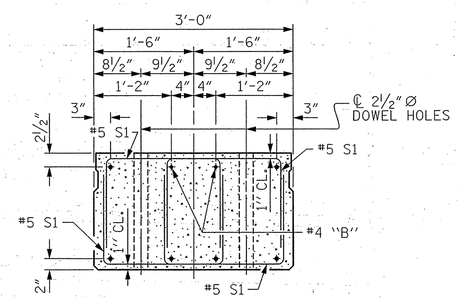

END ELEVATION

SHOWING PLACEMENT OF DOUBLE STIRRUPS AND LOCATION OF DOWEL HOLES. (STRAND LAYOUT NOT SHOWN.) INTERIOR SLAB UNIT SHOWN-EXTERIOR SLAB UNIT SIMILAR EXCEPT SHEAR KEY LOCATION.

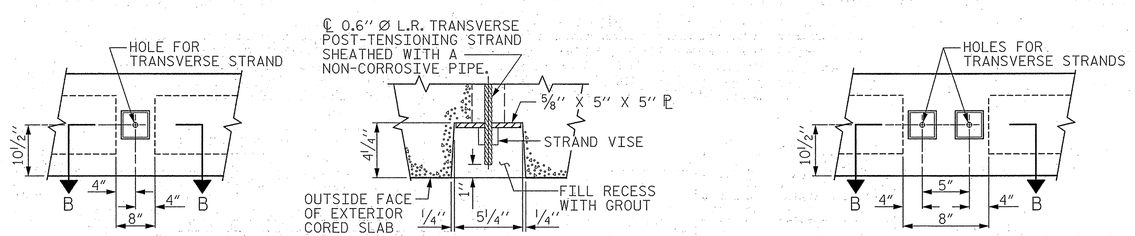

ELEVATION VIEW — SECTION B-B — CORED SLAB UNIT #10

ELEVATION VIEW — SECTION B-B — CORED SLAB UNIT #1

GROUTED RECESS AT END OF POST-TENSIONED STRAND OF CORED SLABS

PROJECT NO. 17BP.14.R73
MACON COUNTY
STATION: 12+91.35 -L-

SHEET 1 OF 3

STATE OF NORTH CAROLINA
DEPARTMENT OF TRANSPORTATION
RALEIGH

STANDARD
3'-0" X 1'-9"
PRESTRESSED CONCRETE CORED SLAB UNIT
90° SKEW

ASSEMBLED BY : PFC	DATE : 06/13
CHECKED BY : CMT	DATE : 06/13
DRAWN BY : DGE 5/09	REV. 12/11 MAA/AAC
CHECKED BY : BCH 6/09	

Prepared in the Office of: Mattern & Craig
CONSULTING ENGINEERS - SURVEYORS
12 BROAD STREET
ASHEVILLE, NORTH CAROLINA 28801
(828) 254-2201 - FAX (828) 254-4562

NORTH CAROLINA PROFESSIONAL SEAL 14209 ENGINEER STEVEN A. CAMPBELL
6/27/13

REVISIONS						SHEET NO.
NO.	BY:	DATE:	NO.	BY:	DATE:	S-5
1			3			TOTAL SHEETS
2			4			14

STD. NO. 21" PCS2_30_90S

$$$$$$SYSTIME$$$$$
$$$$$$$$$$$$$$$$$$$$$$$$DGN$$$$$$$$$$$$$$$$$$$$$$$$
$$$$USERNAME$$$$

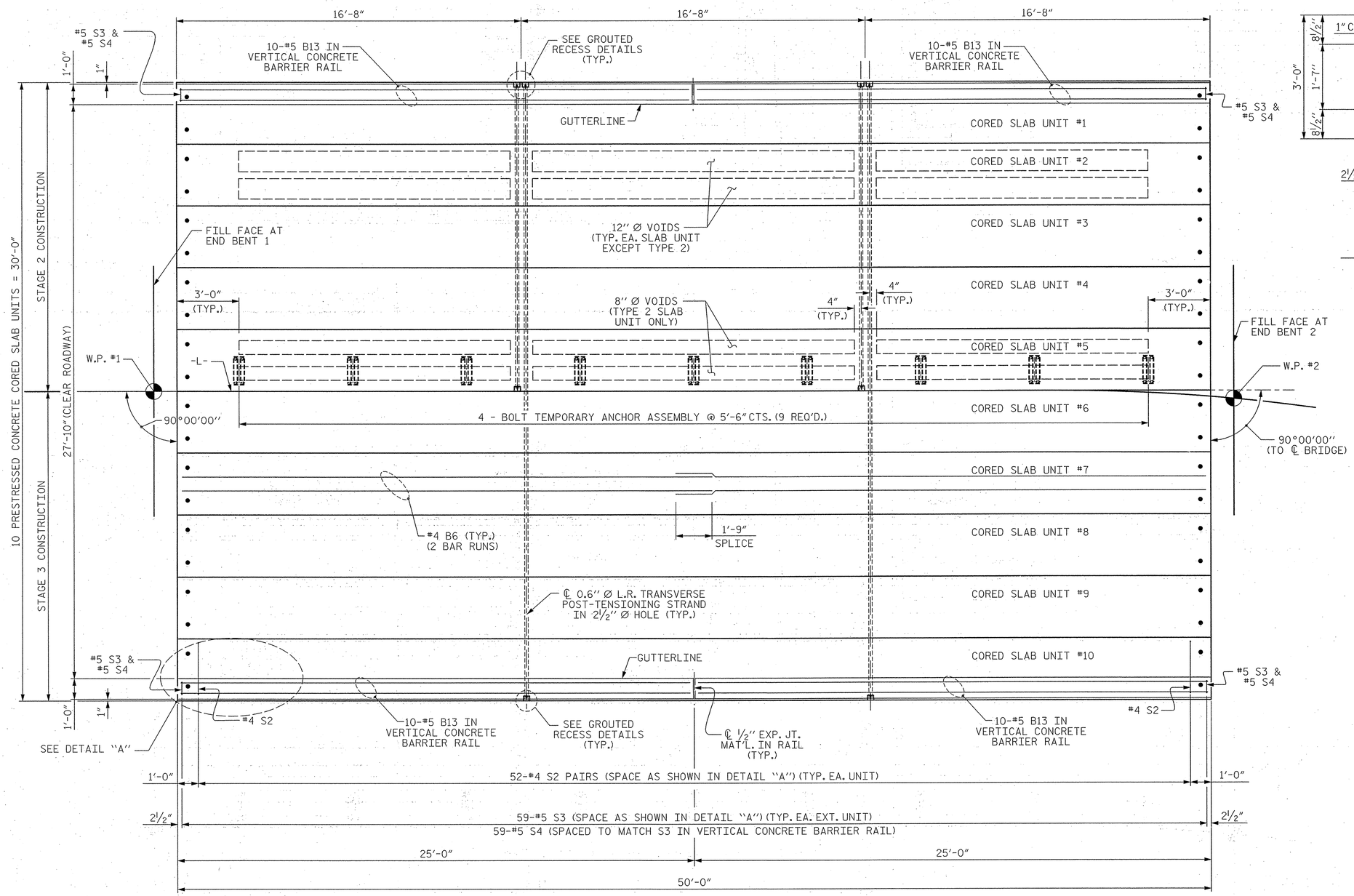

PLAN OF UNIT

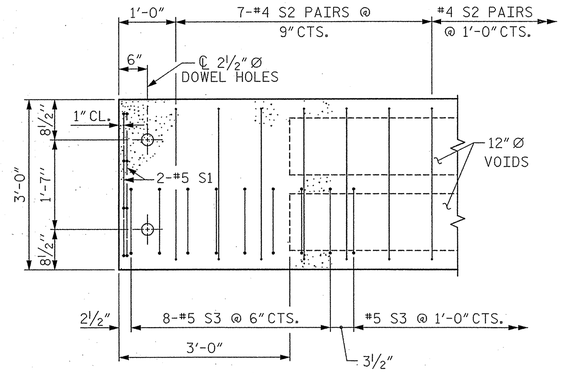

DETAIL "A"

NOTE: EXTERIOR UNIT SHOWN - INTERIOR UNIT SIMILAR EXCEPT OMIT #5 S3 BARS.

PROJECT NO. 17BP.14.R.73

MACON COUNTY

STATION: 12+91.35 -L-

SHEET 2 OF 3

STATE OF NORTH CAROLINA
DEPARTMENT OF TRANSPORTATION
RALEIGH

PLAN OF 50' UNIT 27'-10" CLEAR ROADWAY 90° SKEW

ASSEMBLED BY : PFC	DATE : 06/13		
CHECKED BY : CMT	DATE : 06/13		
DRAWN BY : DGE 3/09	REV. 12/5/11 MAA/AAC		
CHECKED BY : BCH 3/09			

Prepared in the Office of:
Mattern & Craig
CONSULTING ENGINEERS - SURVEYORS
12 BROAD STREET
ASHEVILLE, NORTH CAROLINA 28801
(828) 254-2201 - FAX (828) 254-4562

NORTH CAROLINA PROFESSIONAL SEAL 14309 ENGINEER STEPHEN A. CAMPBELL
6/21/13

REVISIONS								SHEET NO.
NO.	BY:	DATE:	NO.	BY:	DATE:			S-6
1			3					TOTAL SHEETS
2			4					14

STD. NO. 21" PCS_30_90S_50L

$$$$$$SYSTIME$$$$$
$$$$$$$$$$$$$$$$$$$$$$$$$$DGN$$$$$$$$$$$$$$$$$$$$$$$$
$$$$USERNAME$$$$

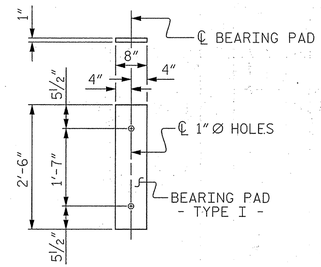

FIXED END
(TYPE I - 20 REQ'D)

ELASTOMERIC BEARING DETAILS

ELASTOMER IN ALL BEARINGS SHALL BE 50 DUROMETER HARDNESS.

CORED SLABS REQUIRED			
	NUMBER	LENGTH	TOTAL LENGTH
50' UNIT			
EXTERIOR C.S.	2	50'-0"	100
INTERIOR C.S.	8	50'-0"	400
TOTAL	10		500

DEAD LOAD DEFLECTION AND CAMBER	
	3'-0" x 1'-9"
50' CORED SLAB UNIT	0.6"Ø L.R. STRAND
CAMBER (SLAB ALONE IN PLACE)	2½" ↑
DEFLECTION DUE TO SUPERIMPOSED DEAD LOAD**	¼" ↓
FINAL CAMBER	2¼" ↑

** INCLUDES FUTURE WEARING SURFACE

BAR TYPES

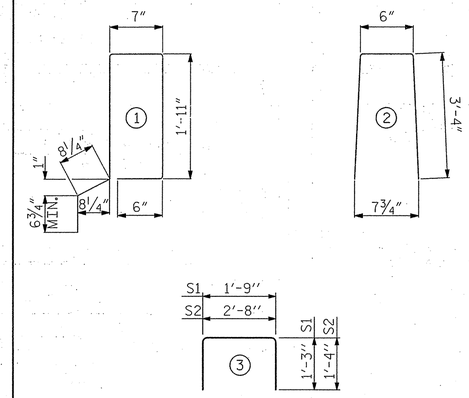

ALL BAR DIMENSIONS ARE OUT TO OUT

NOTES

ALL PRESTRESSING STRANDS SHALL BE 7-WIRE LOW RELAXATION GRADE 270 STRANDS AND SHALL CONFORM TO AASHTO M203 EXCEPT FOR SAMPLING REQUIREMENTS WHICH SHALL BE IN ACCORDANCE WITH THE STANDARD SPECIFICATIONS.

ALL REINFORCING STEEL CAST WITH THE CORED SLAB SECTIONS SHALL BE GRADE 60 AND SHALL BE INCLUDED IN THE UNIT PRICE BID FOR PRESTRESSED CONCRETE CORED SLABS.

RECESSES FOR TRANSVERSE STRANDS SHALL BE GROUTED AFTER THE TENSIONING OF THE STRANDS.

THE 2½"Ø DOWEL HOLES AT FIXED ENDS OF SLAB SECTIONS SHALL BE FILLED WITH NON-SHRINK GROUT.

THE BACKER ROD SHALL CONFORM TO THE REQUIREMENTS OF TYPE M BOND BREAKER. SEE SECTION 1028 OF THE STANDARD SPECIFICATIONS.

WHEN CORED SLABS ARE CAST, AN INTERNAL HOLD-DOWN SYSTEM SHALL BE EMPLOYED TO PREVENT VOIDS FROM RISING OR MOVING SIDEWAYS. AT LEAST SIX WEEKS PRIOR TO CASTING CORED SLABS, THE CONTRACTOR SHALL SUBMIT TO THE ENGINEER FOR REVIEW AND COMMENT, DETAILED DRAWINGS OF THE PROPOSED HOLD-DOWN SYSTEM. IN ADDITION TO STRUCTURAL DETAILS, LOCATION AND SPACING OF THE HOLD-DOWNS SHALL BE INDICATED.

ALL REINFORCING STEEL IN THE VERTICAL CONCRETE BARRIER RAIL SHALL BE EPOXY COATED.

PRESTRESSING STRANDS SHALL BE CUT FLUSH WITH THE CORED SLAB UNIT ENDS.

APPLY EPOXY PROTECTIVE COATING TO CORED SLAB UNIT ENDS.

GROOVED CONTRACTION JOINTS, ½" IN DEPTH, SHALL BE TOOLED IN ALL EXPOSED FACES OF THE BARRIER RAIL AND IN ACCORDANCE WITH ARTICLE 825-10(B) OF THE STANDARD SPECIFICATIONS. A CONTRACTION JOINT SHALL BE LOCATED AT EACH THIRD POINT BETWEEN BARRIER RAIL EXPANSION JOINTS. ONLY ONE CONTRACTION JOINT IS REQUIRED AT MIDPOINT OF BARRIER RAIL SEGMENTS LESS THAN 20 FEET IN LENGTH AND NO CONTRACTION JOINTS ARE REQUIRED FOR THOSE SEGMENTS LESS THAN 10 FEET IN LENGTH.

TRANSVERSE POST TENSIONING OF THE CORED SLAB UNITS SHALL BE DONE IN ACCORDANCE WITH THE STANDARD SPECIFICATIONS.

THE TRANSFER OF LOAD FROM THE ANCHORAGES TO THE CORED SLAB UNIT SHALL BE DONE WHEN THE CONCRETE HAS REACHED A COMPRESSIVE STRENGTH OF NOT LESS THAN THE REQUIRED STRENGTH SHOWN IN THE "CONCRETE RELEASE STRENGTH" TABLE.

FOR GROUT FOR STRUCTURES, SEE SPECIAL PROVISIONS.

FOR GUARDRAIL ANCHOR ASSEMBLY DETAILS, SEE SHEET S-8.

BILL OF MATERIAL FOR VERTICAL CONCRETE BARRIER RAIL						
BAR	BARS PER PAIR OF EXTERIOR UNITS	TOTAL NO.	SIZE	TYPE	LENGTH	WEIGHT
	50' UNIT					
*B13	40	40	#5	STR	24'-7"	1026
* S4	118	118	#5	2	7'-2"	882
* EPOXY COATED REINFORCING STEEL				LBS.		1908
CLASS AA CONCRETE				CU.YDS.		13.1
TOTAL VERTICAL CONCRETE BARRIER RAIL				LN. FT.		100.25

GUTTERLINE ASPHALT THICKNESS & RAIL HEIGHT		
27'-10" CLEAR ROADWAY	ASPHALT OVERLAY THICKNESS	RAIL HEIGHT
	@ MID-SPAN	@ MID-SPAN
	SUPERED SECTION	
50' UNITS	1½"	3'-7¾"

CONCRETE RELEASE STRENGTH	
UNIT	PSI
50' UNITS	4900

BILL OF MATERIAL FOR ONE 50' CORED SLAB UNIT							
				EXTERIOR UNIT		INTERIOR UNIT	
BAR	NUMBER	SIZE	TYPE	LENGTH	WEIGHT	LENGTH	WEIGHT
B6	4	#4	STR	25'-9"	69	25'-9"	69
S1	8	#5	3	4'-3"	35	4'-3"	35
S2	104	#4	3	5'-4"	371	5'-4"	371
* S3	59	#5	1	6'-2"	379		
REINFORCING STEEL			LBS.		475		475
* EPOXY COATED REINFORCING STEEL			LBS.		379		
6500 P.S.I. CONCRETE			CU. YDS.		7.1		7.1
0.6"Ø L.R. STRANDS			No.		19		19

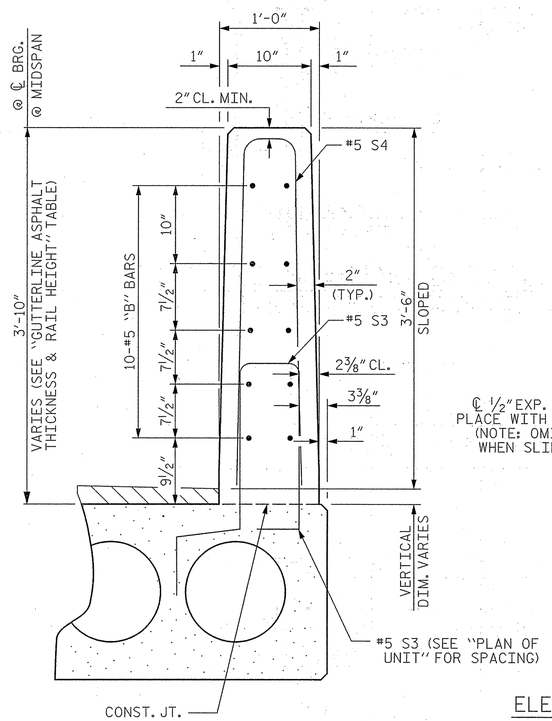

VERTICAL CONCRETE BARRIER RAIL SECTION

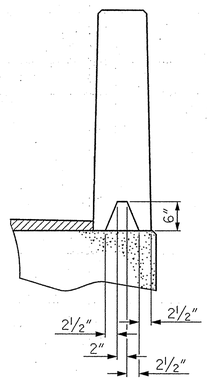

SECTION S-S
AT DAM IN OPEN JOINT
(THIS IS TO BE USED ONLY WHEN SLIP FORM IS USED)

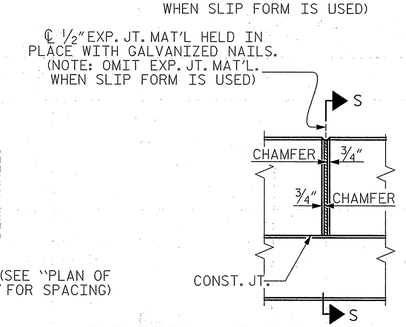

ELEVATION AT EXPANSION JOINTS

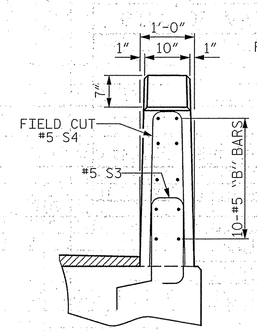

END VIEW

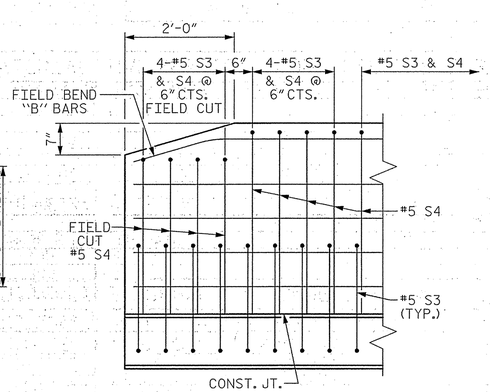

SIDE VIEW

END OF RAIL DETAILS

GRADE 270 STRANDS	
	0.6"Ø L.R.
AREA (SQUARE INCHES)	0.217
ULTIMATE STRENGTH (LBS. PER STRAND)	58,600
APPLIED PRESTRESS (LBS. PER STRAND)	43,950

PROJECT NO. 17BP.14.R.73
MACON COUNTY
STATION: 12+91.35 -L-

SHEET 3 OF 3

STATE OF NORTH CAROLINA
DEPARTMENT OF TRANSPORTATION
RALEIGH

STANDARD
3'-0" X 1'-9"
PRESTRESSED CONCRETE
CORED SLAB UNIT
90° SKEW

ASSEMBLED BY : PFC	DATE : 06/13
CHECKED BY : CMT	DATE : 06/13
DRAWN BY : DGE 5/09	REV. 12/11 MAA/AAC
CHECKED BY : BCH 6/09	

Prepared in the Office of: Mattern & Craig
CONSULTING ENGINEERS - SURVEYORS
12 BROAD STREET
ASHEVILLE, NORTH CAROLINA 28801
(828) 254-2201 - FAX (828) 254-4562

NORTH CAROLINA PROFESSIONAL SEAL 14309 ENGINEER STEVEN A. CAMPBELL
6/25/13

REVISIONS						SHEET NO.
NO.	BY:	DATE:	NO.	BY:	DATE:	S-7
1			3			TOTAL SHEETS
2			4			14

STD. NO. 21"PCS3_30_90S

$$$$$$SYSTIME$$$$$
$$$$$$$$$$$$$$$$$$$$$$$$DGN$$$$$$$$$$$$$$$$$$$$$$$$
$$$$USERNAME$$$$

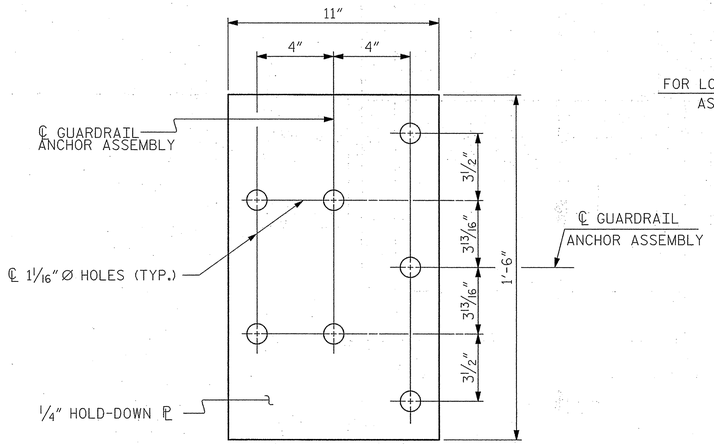

PLAN

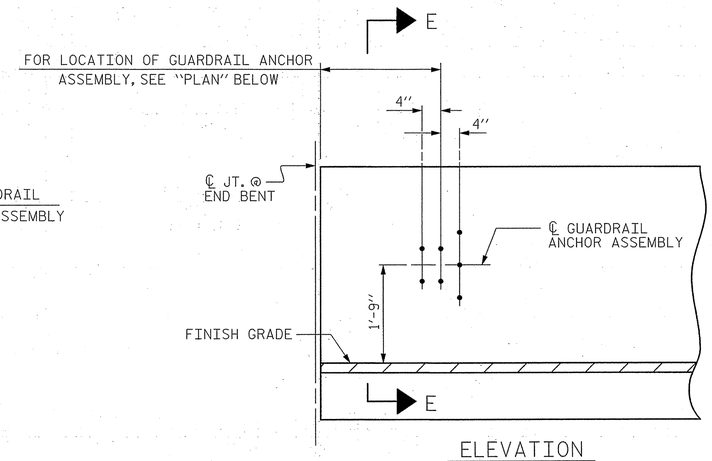

ELEVATION

NOTES

THE GUARDRAIL ANCHOR ASSEMBLY SHALL CONSIST OF A 1/4" HOLD DOWN PLATE AND 7 - 7/8" Ø BOLTS WITH NUTS AND WASHERS.

THE HOLD-DOWN PLATE SHALL CONFORM TO AASHTO M270 GRADE 36. AFTER FABRICATION, THE HOLD-DOWN PLATE SHALL BE HOT-DIP GALVANIZED IN ACCORDANCE WITH AASHTO M111.

BOLTS SHALL CONFORM TO THE REQUIREMENTS OF ASTM A307 AND NUTS SHALL CONFORM TO THE REQUIREMENTS OF AASHTO M291. BOLTS, NUTS AND WASHERS SHALL BE GALVANIZED. (AT THE CONTRACTOR'S OPTION, STAINLESS STEEL BOLTS, NUTS AND WASHERS MAY BE USED AS AN ALTERNATE FOR THE 7/8" Ø GALVANIZED BOLTS, NUTS AND WASHERS. THEY SHALL CONFORM TO OR EXCEED THE MECHANICAL REQUIREMENTS OF ASTM A307. THE USE OF THIS ALTERNATE SHALL BE APPROVED BY THE ENGINEER.)

THE GUARDRAIL ANCHOR ASSEMBLY IS REQUIRED AT ALL POINTS WHERE APPROACH GUARDRAIL IS TO BE ATTACHED TO THE END OF BARRIER RAIL. FOR POINTS OF ATTACHMENT, SEE SKETCH.

AFTER INSTALLATION, THE EXPOSED THREAD OF THE BOLT SHALL BE BURRED WITH A SHARP POINTED TOOL.

THE COST OF THE GUARDRAIL ANCHOR ASSEMBLY SHALL BE INCLUDED IN THE UNIT CONTRACT PRICE BID FOR VERTICAL CONCRETE BARRIER RAIL.

THE VERTICAL REINFORCING BARS MAY BE SHIFTED SLIGHTLY IN THE VERTICAL CONCRETE BARRIER RAIL TO CLEAR ASSEMBLY BOLTS.

THE 1 1/4" Ø HOLES SHALL BE FORMED OR DRILLED WITH A CORE BIT. IMPACT TOOLS WILL NOT BE PERMITTED. ANY CONCRETE DAMAGED BY THIS WORK SHALL BE REPAIRED TO THE SATISFACTION OF THE ENGINEER.

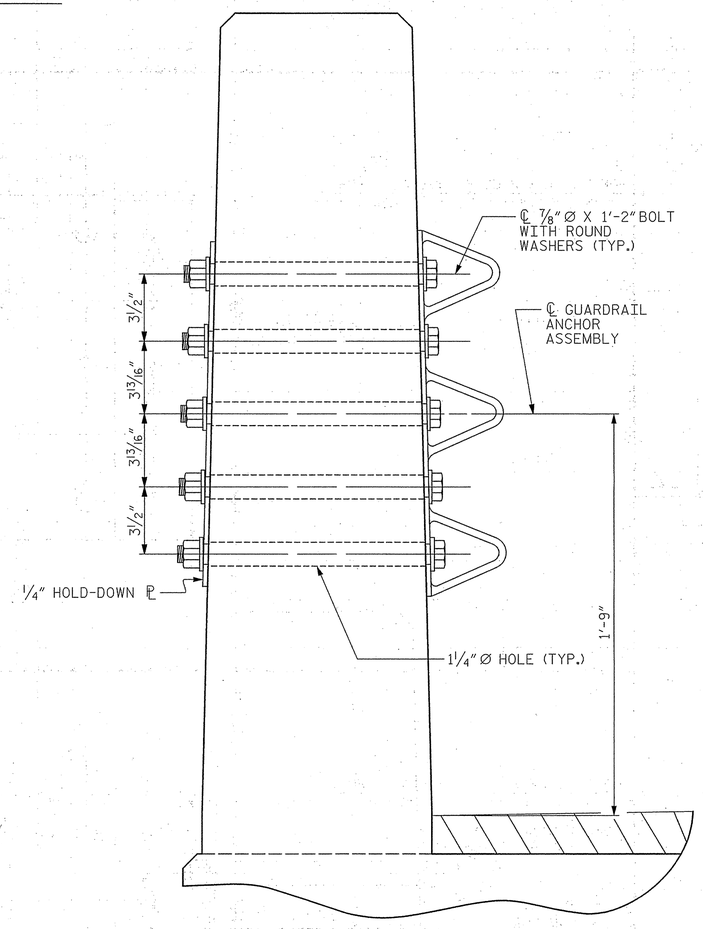

SECTION E-E

GUARDRAIL ANCHOR ASSEMBLY DETAILS

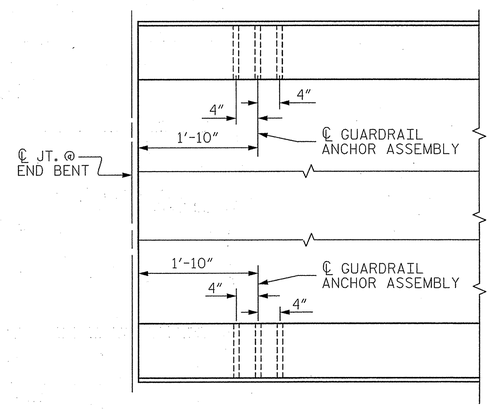

PLAN

LOCATION OF ANCHORS FOR GUARDRAIL

END BENT #1 SHOWN, END BENT #2 SIMILAR.

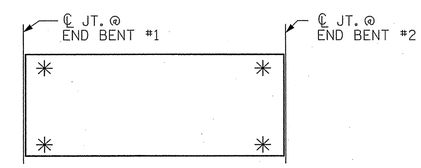

SKETCH SHOWING POINTS OF ATTACHMENT

✳ DENOTES GUARDRAIL ANCHOR ASSEMBLY

PROJECT NO. 17BP.14.R73

MACON COUNTY

STATION: 12+91.35 -L-

STATE OF NORTH CAROLINA
DEPARTMENT OF TRANSPORTATION
RALEIGH

STANDARD
GUARDRAIL ANCHORAGE FOR VERTICAL CONCRETE BARRIER RAIL

ASSEMBLED BY : PFC	DATE : 06/13		
CHECKED BY : CMT	DATE : 06/13		
DRAWN BY : MAA 5/10	ADDED 5/6/10		
CHECKED BY : GM 5/10	REV. 10/1/11	MAA/GM	
	REV. 12/5/11	MAA/GM	

Prepared in the Office of: Mattern & Craig
CONSULTING ENGINEERS - SURVEYORS
12 BROAD STREET
ASHEVILLE, NORTH CAROLINA 28801
(828) 254-2201 - FAX (828) 254-4562

NORTH CAROLINA PROFESSIONAL SEAL 14309 ENGINEER STEVEN A. CAMPBELL 6/24/13

REVISIONS						SHEET NO.
NO.	BY:	DATE:	NO.	BY:	DATE:	S-8
1			3			TOTAL SHEETS
2			4			14

(SHT 1) STD. NO. GRA3

$$$$$$$SYSTIME$$$$$
$$$$$$$$$$$$$$$$$$$$$$$$DGN$$$$$$$$$$$$$$$$$$$$$$$$
$$$$USERNAME$$$$

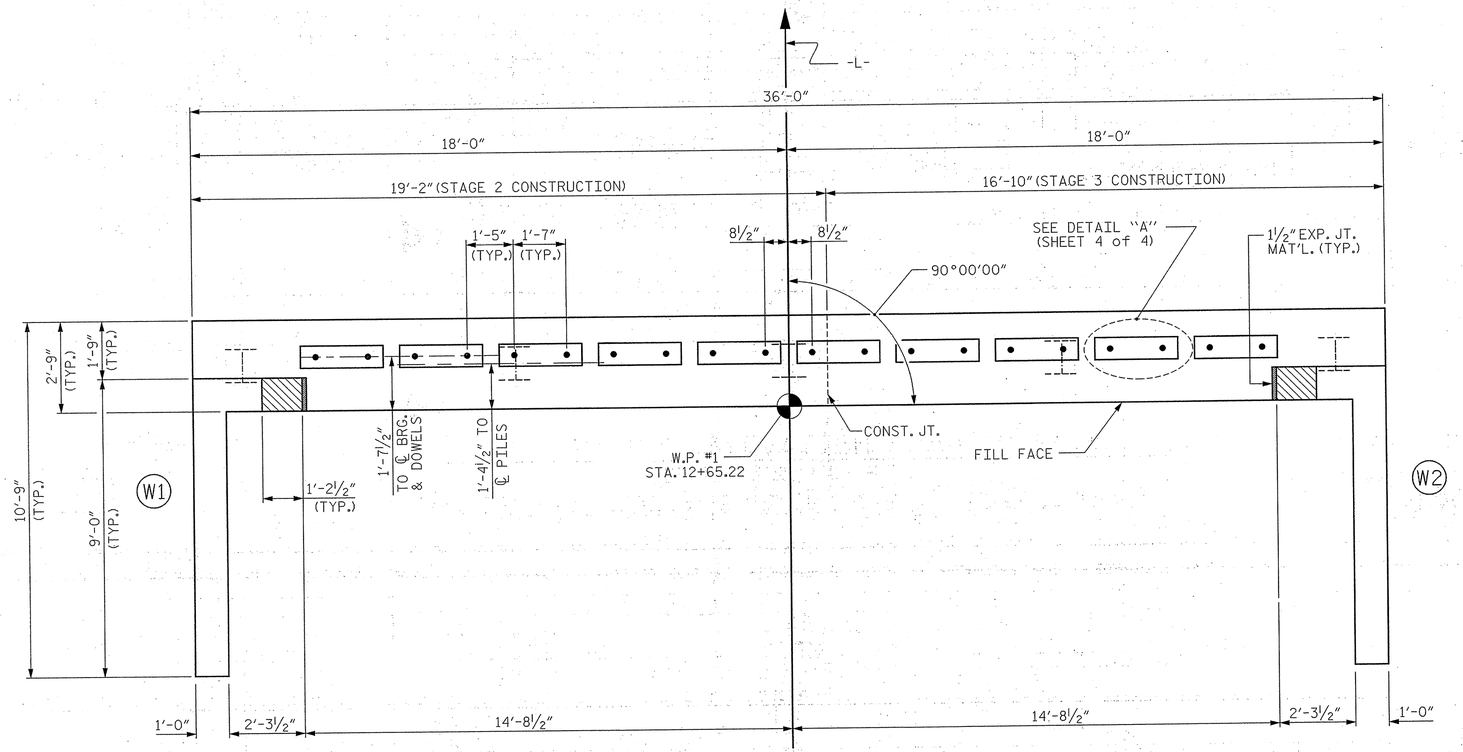

PLAN

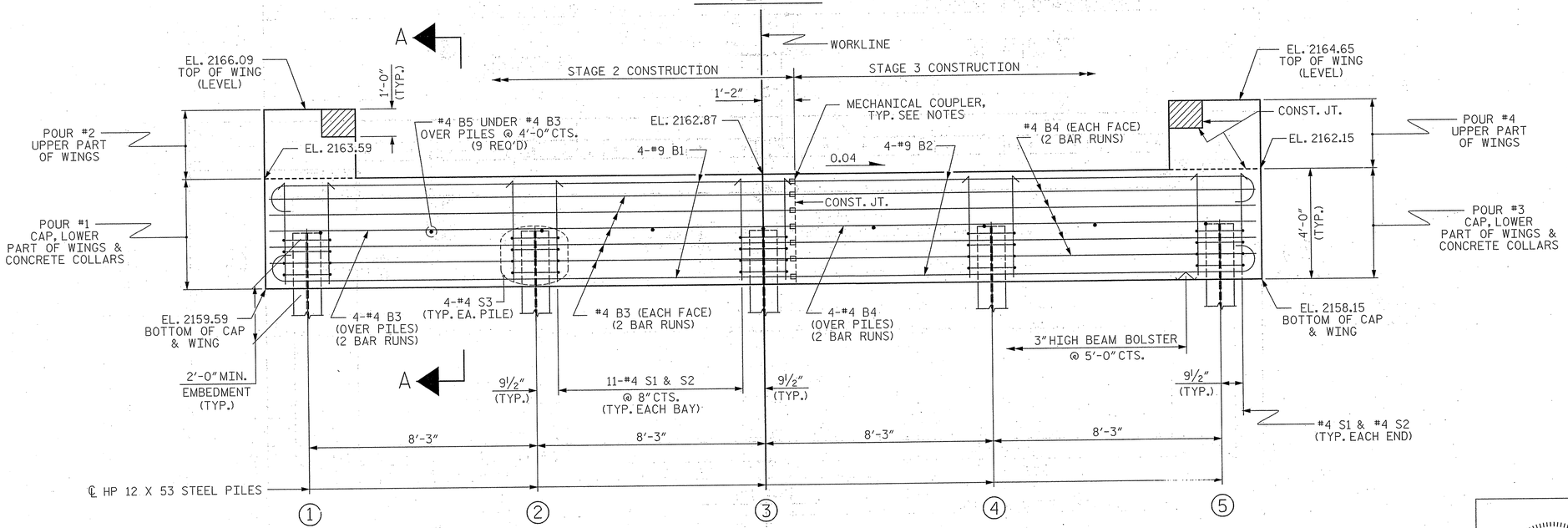

ELEVATION

WINGS NOT SHOWN FOR CLARITY.
FOR SECTION A-A, SEE SHEET 4 of 4.
CONCRETE COLLARS FOR STEEL PILES NOT SHOWN IN PLAN AND ELEVATION VIEWS FOR CLARITY.
SEE "CORROSION PROTECTION FOR STEEL PILES DETAIL", SHEET 4 of 4.

NOTES

STIRRUPS IN CAP MAY BE SHIFTED AS NECESSARY TO CLEAR DOWELS.

THE CONCRETE IN THE SHADED AREA OF THE WING SHALL BE POURED AFTER THE VERTICAL CONCRETE BARRIER RAIL IS CAST IF SLIP FORMING IS USED.

FOR PILE SPLICE DETAILS, SEE SHEET 4 of 4.

FOR WING DETAILS, SEE SHEET 3 of 4.

FOR MECHANICAL SPLICES SEE SECTION 425-5(B) OF THE STANDARD SPECIFICATIONS.

TOP OF PILE ELEVATIONS	
1	2161.53
2	2161.20
3	2160.87
4	2160.54
5	2160.21

PROJECT NO. 17BP.14.R.73
MACON COUNTY
STATION: 12+91.35 -L-

SHEET 1 OF 4

STATE OF NORTH CAROLINA
DEPARTMENT OF TRANSPORTATION
RALEIGH

SUBSTRUCTURE

END BENT No. 1

ASSEMBLED BY :	PFC	DATE :	06/13
CHECKED BY :	CMT	DATE :	06/13
DRAWN BY :	DGE	02/10	
CHECKED BY :	MKT	02/10	

Prepared in the Office of:
Mattern & Craig
CONSULTING ENGINEERS - SURVEYORS
12 BROAD STREET
ASHEVILLE, NORTH CAROLINA 28801
(828) 254-2201 - FAX (828) 254-4562

NORTH CAROLINA PROFESSIONAL SEAL 14308 ENGINEER STEVEN A. CAMPBELL 10/25/13

REVISIONS						SHEET NO.
NO.	BY:	DATE:	NO.	BY:	DATE:	S-9
1			3			TOTAL SHEETS
2			4			14

STD. NO. EB_30_90S4

$$$$$$SYSTIME$$$$$
$$$$$$$$$$$$$$$$$$$$$$$$DGN$$$$$$$$$$$$$$$$$$$$$$$$
$$$$USERNAME$$$$

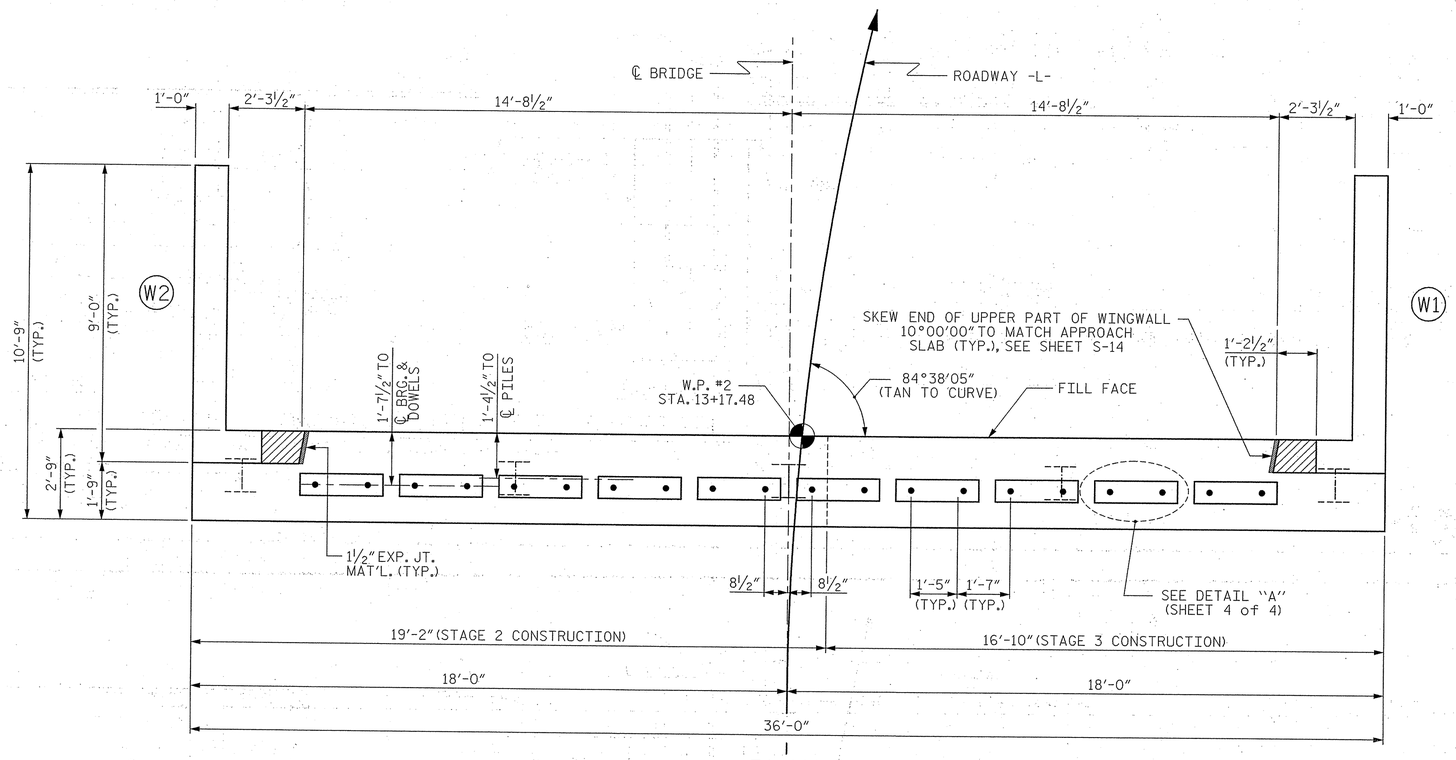

PLAN

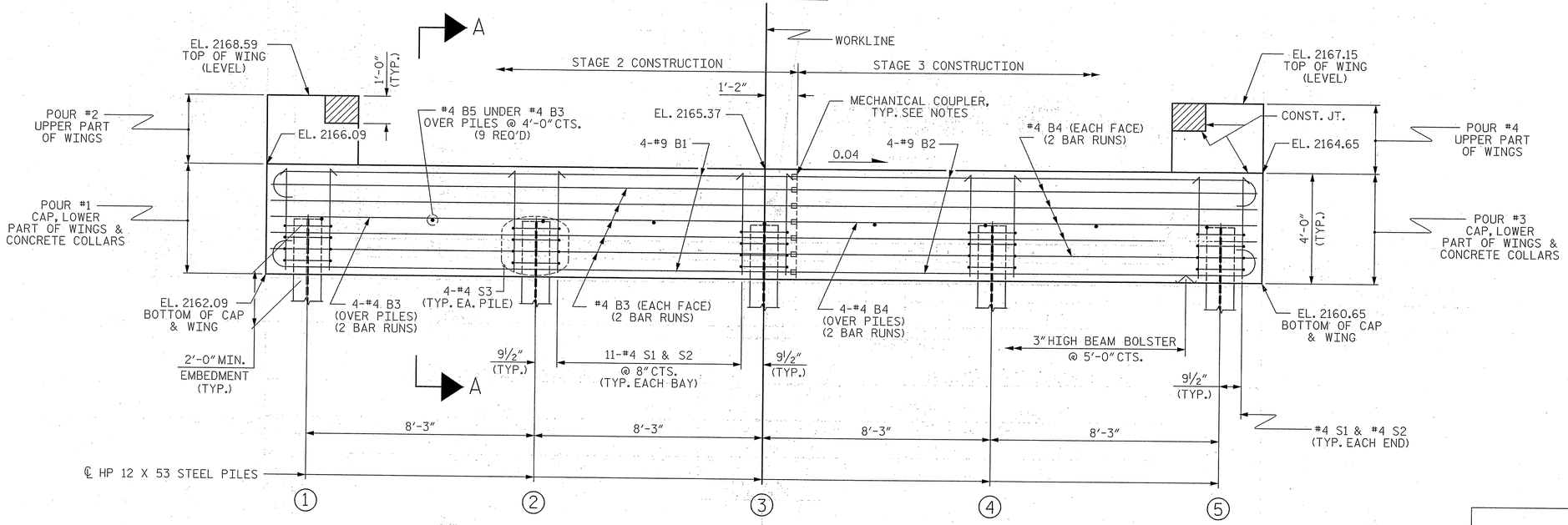

ELEVATION

WINGS NOT SHOWN FOR CLARITY.
FOR SECTION A-A, SEE SHEET 4 of 4.
CONCRETE COLLARS FOR STEEL PILES NOT SHOWN IN PLAN AND ELEVATION VIEWS FOR CLARITY.
SEE "CORROSION PROTECTION FOR STEEL PILES DETAIL", SHEET 4 of 4.

NOTES

STIRRUPS IN CAP MAY BE SHIFTED AS NECESSARY TO CLEAR DOWELS.

THE CONCRETE IN THE SHADED AREA OF THE WING SHALL BE POURED AFTER THE VERTICAL CONCRETE BARRIER RAIL IS CAST IF SLIP FORMING IS USED.

FOR PILE SPLICE DETAILS, SEE SHEET 4 of 4.

FOR WING DETAILS, SEE SHEET 4 of 4.

FOR MECHANICAL SPLICES SEE SECTION 425-5(B) OF THE STANDARD SPECIFICATIONS.

TOP OF PILE ELEVATIONS	
1	2164.03
2	2163.70
3	2163.37
4	2163.04
5	2162.71

PROJECT NO. 17BP.14.R.73
MACON COUNTY
STATION: 12+91.35 -L-

SHEET 2 OF 4

STATE OF NORTH CAROLINA
DEPARTMENT OF TRANSPORTATION
RALEIGH

SUBSTRUCTURE

END BENT No. 2

ASSEMBLED BY :	PFC	DATE :	06/13
CHECKED BY :	CMT	DATE :	06/13
DRAWN BY :	DGE	02/10	
CHECKED BY :	MKT	02/10	

Prepared in the Office of:
Mattern & Craig
CONSULTING ENGINEERS - SURVEYORS
12 BROAD STREET
ASHEVILLE, NORTH CAROLINA 28801
(828) 254-2201 - FAX (828) 254-4562

NORTH CAROLINA PROFESSIONAL SEAL 14309 ENGINEER STEVEN A. CAMPBELL
6/13/13

REVISIONS						SHEET NO.
NO.	BY:	DATE:	NO.	BY:	DATE:	S-10
1			3			TOTAL SHEETS
2			4			14

STD. NO. EB 30 90S4

$$$$$$$SYSTIME$$$$$
$$$$$$$$$$$$$$$$$$$$$$$$DGN$$$$$$$$$$$$$$$$$$$$$$$$
$$$$USERNAME$$$$

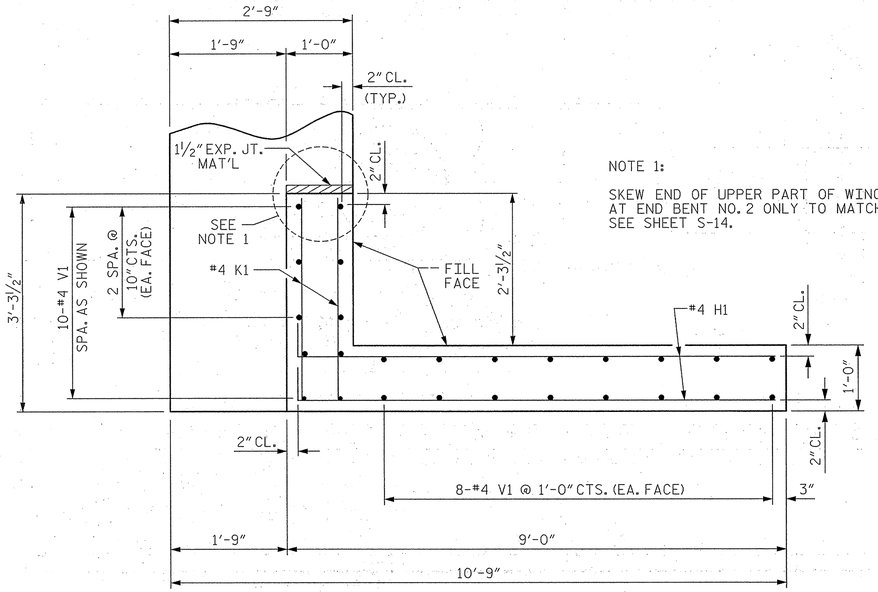

PLAN OF WING (W1)

NOTE 1:

SKEW END OF UPPER PART OF WINGWALL 10°00'00" AT END BENT NO. 2 ONLY TO MATCH APPROACH SLAB, SEE SHEET S-14.

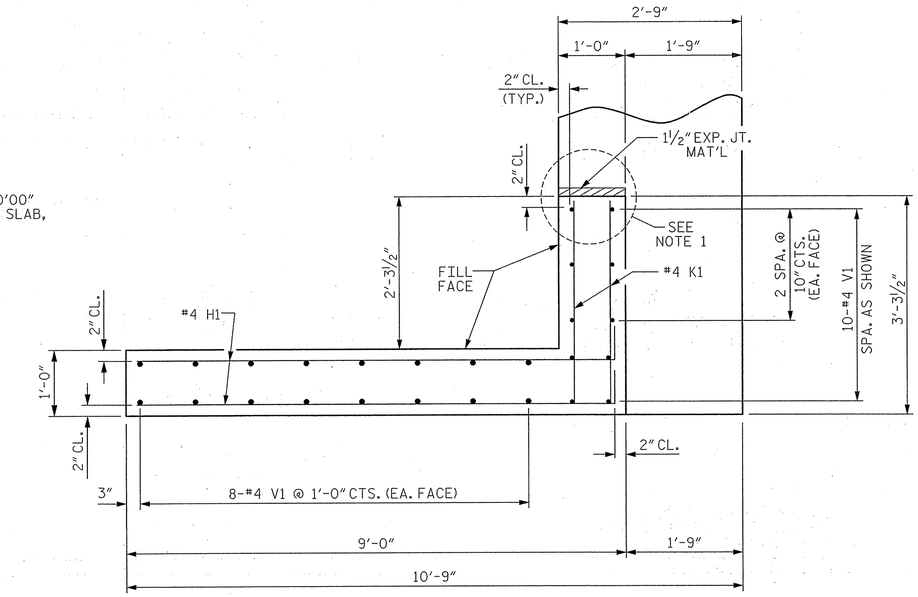

PLAN OF WING (W2)

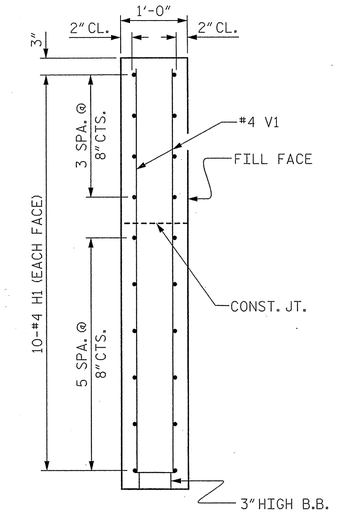

SECTION X-X

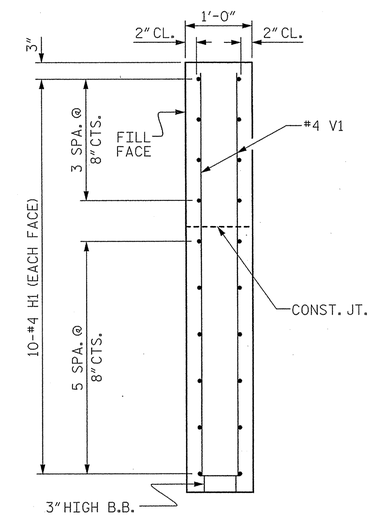

SECTION Y-Y

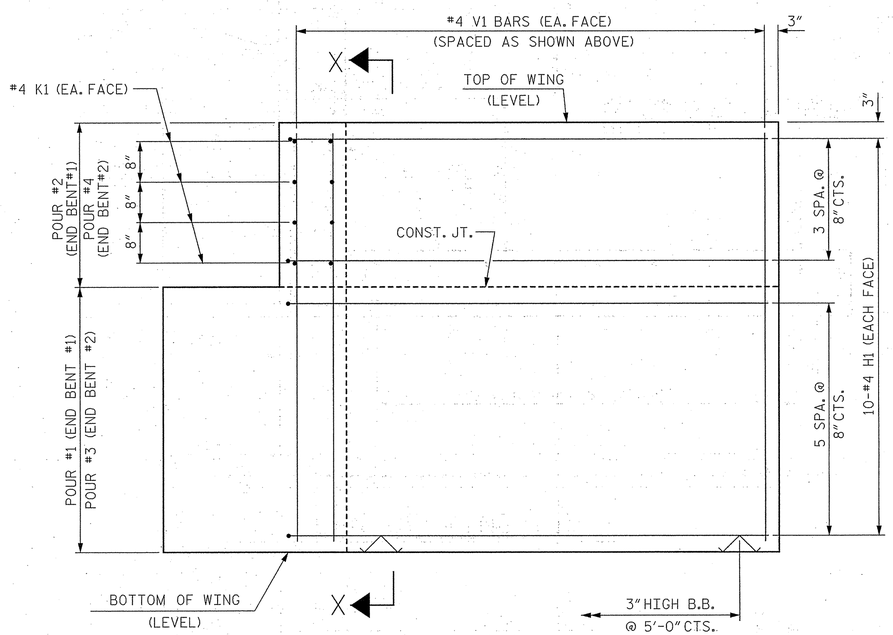

ELEVATION OF WING (W1)

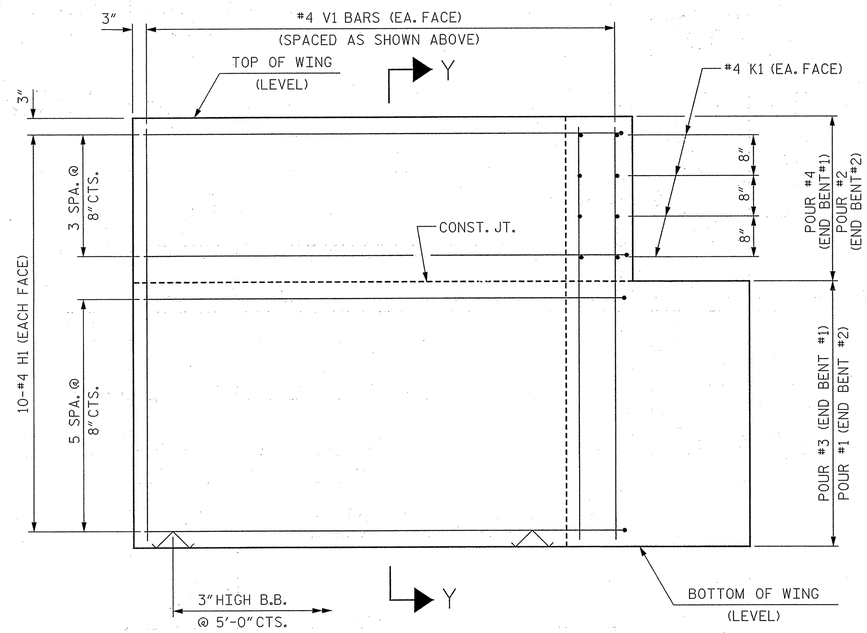

ELEVATION OF WING (W2)

WING DETAILS

PROJECT NO. 17BP.14.R.73

MACON COUNTY

STATION: 12+91.35 -L-

SHEET 3 OF 4

STATE OF NORTH CAROLINA
DEPARTMENT OF TRANSPORTATION
RALEIGH

SUBSTRUCTURE

END BENT
WING DETAILS

ASSEMBLED BY :	PFC	DATE :	06/13
CHECKED BY :	CMT	DATE :	06/13
DRAWN BY : DGE	02/10		
CHECKED BY : MKT	02/10		

Prepared in the Office of:
Mattern & Craig
CONSULTING ENGINEERS - SURVEYORS
12 BROAD STREET
ASHEVILLE, NORTH CAROLINA 28801
(828) 254-2201 - FAX (828) 254-4562

NORTH CAROLINA PROFESSIONAL SEAL 14383 ENGINEER STEVEN A. CAMPBELL
6/13

REVISIONS							SHEET NO.
NO.	BY:	DATE:	NO.	BY:	DATE:		S-11
1			3				TOTAL SHEETS
2			4				14

$$$$$$SYSTIME$$$$$
$$$$$$$$$$$$$$$$$$$$$$$$DGN$$$$$$$$$$$$$$$$$$$$$$$$
$$$$USERNAME$$$$

STD. NO. EB_30_90S4

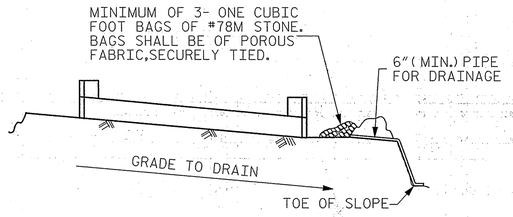

BAGGED STONE AND PIPE SHALL BE PLACED IMMEDIATELY AFTER COMPLETION OF END BENT EXCAVATION. PIPE MAY BE EITHER CONCRETE, CORRUGATED STEEL, CORRUGATED ALUMINUM ALLOY, OR CORRUGATED PLASTIC. PERFORATED PIPE WILL NOT BE ALLOWED.

BAGGED STONE SHALL REMAIN IN PLACE UNTIL THE ENGINEER DIRECTS THAT IT BE REMOVED. THE CONTRACTOR SHALL REMOVE AND DISPOSE OF SILT ACCUMULATIONS AT BAGGED STONE WHEN SO DIRECTED BY THE ENGINEER. BAGS SHALL BE REMOVED AND REPLACED WHENEVER THE ENGINEER DETERMINES THAT THEY HAVE DETERIORATED AND LOST THEIR EFFECTIVENESS.

NO SEPARATE PAYMENT WILL BE MADE FOR THIS WORK AND THE ENTIRE COST OF THIS WORK SHALL BE INCLUDED IN THE UNIT CONTRACT PRICE BID FOR THE SEVERAL PAY ITEMS.

TEMPORARY DRAINAGE AT END BENT

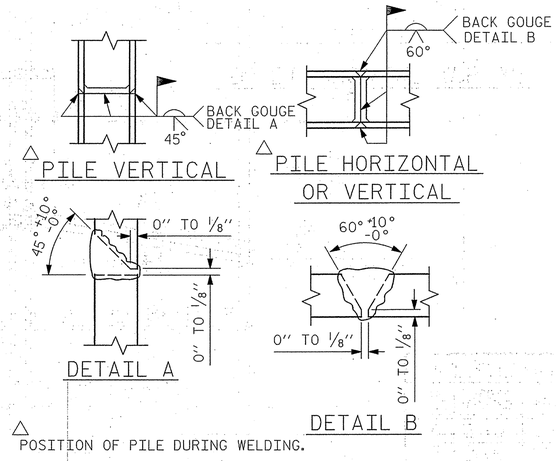

△ POSITION OF PILE DURING WELDING.

PILE SPLICE DETAILS

SCALE- 7/16" = 1'-0"

BAR TYPES

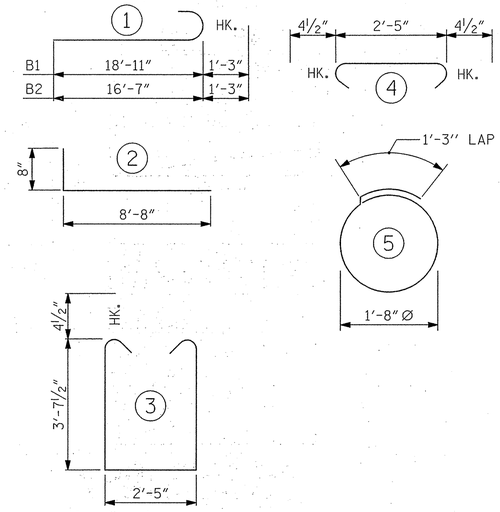

ALL BAR DIMENSIONS ARE OUT TO OUT.

END BENT No. 1	END BENT No. 2
HP 12 X 53 STEEL PILES	HP 12 X 53 STEEL PILES
NO: 5 LIN. FT.= 300	NO: 5 LIN. FT.= 175
STEEL PILE POINTS NO: 5	STEEL PILE POINTS NO: 5

BILL OF MATERIAL FOR ONE END BENT

BAR	NO.	SIZE	TYPE	LENGTH	WEIGHT
B1	8	#9	1	20'-2"	549
B2	8	#9	1	17'-10"	485
B3	14	#4	STR	19'-0"	178
B4	14	#4	STR	16'-8"	156
B5	9	#4	STR	2'-5"	15
D1	20	#6	STR	1'-6"	45
H1	40	#4	2	9'-4"	249
K1	16	#4	STR	2'-11"	31
S1	46	#4	3	10'-5"	320
S2	46	#4	4	3'-2"	97
S3	20	#4	5	6'-6"	87
V1	52	#4	STR	6'-2"	214

REINFORCING STEEL (FOR ONE END BENT) 2426 LBS.

CLASS A CONCRETE BREAKDOWN (FOR ONE END BENT)

POUR #1 CAP, LOWER PART OF WINGS & COLLARS 17.9 C.Y.

POUR #2 UPPER PART OF WINGS 2.1 C.Y.

TOTAL CLASS A CONCRETE 20.0 C.Y.

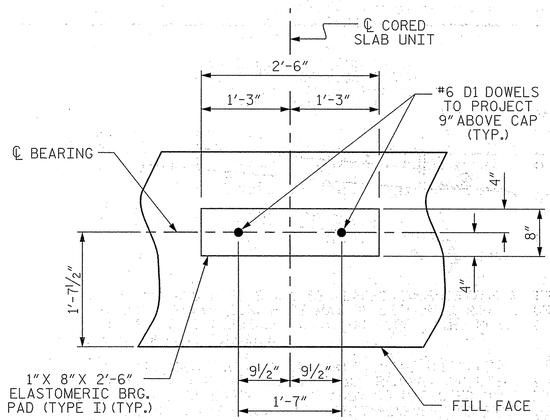

DETAIL "A"

(END BENT No. 1 SHOWN, END BENT No. 2 SIMILAR BY ROTATION)

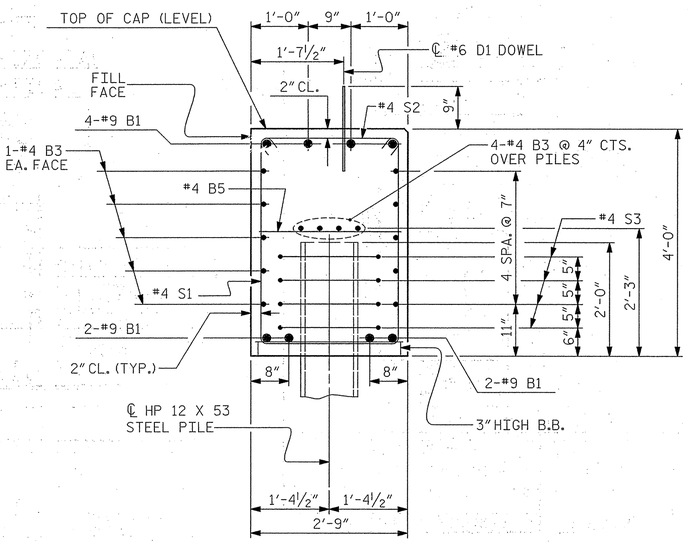

SECTION A-A

(CONCRETE COLLAR NOT SHOWN FOR CLARITY. SEE "CORROSION PROTECTION FOR STEEL PILES DETAIL.")

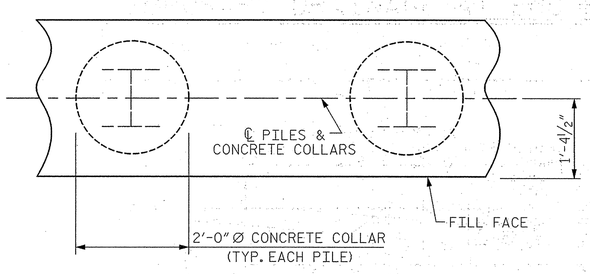

PLAN

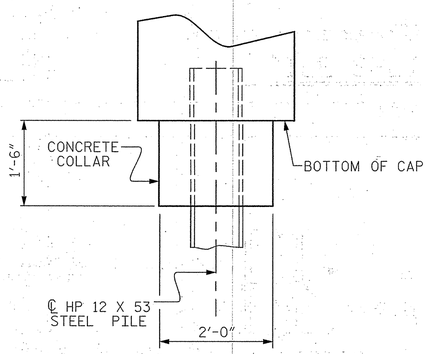

ELEVATION

CORROSION PROTECTION FOR STEEL PILES DETAIL

(END BENT No. 1 SHOWN, END BENT No. 2 SIMILAR BY ROTATION)

PROJECT NO. 17BP.14.R.73
MACON COUNTY
STATION: 12+91.35 -L-

SHEET 4 OF 4

STATE OF NORTH CAROLINA
DEPARTMENT OF TRANSPORTATION
RALEIGH

SUBSTRUCTURE

END BENT No. 1 & 2 DETAILS

ASSEMBLED BY :	PFC	DATE :	06/13
CHECKED BY :	CMT	DATE :	06/13
DRAWN BY :	DGE	02/10	
CHECKED BY :	MKT	02/10	

Prepared in the Office of: Mattern & Craig
CONSULTING ENGINEERS - SURVEYORS
12 BROAD STREET
ASHEVILLE, NORTH CAROLINA 28801
(828) 254-2201 - FAX (828) 254-4562

NORTH CAROLINA PROFESSIONAL SEAL 14308 ENGINEER STEVEN A. CAMPBELL
6/13/13

REVISIONS						SHEET NO.
NO.	BY:	DATE:	NO.	BY:	DATE:	S-12
1			3			TOTAL SHEETS
2			4			14

STD. NO. EB_30_90S4

$$$$$$SYSTIME$$$$$
$$$$$$$$$$$$$$$$$$$$$$DGN$$$$$$$$$$$$$$$$$$$$$$$$
$$$$USERNAME$$$$

NOTES :

FOR BERM WIDTH DIMENSIONS, SEE GENERAL DRAWING.

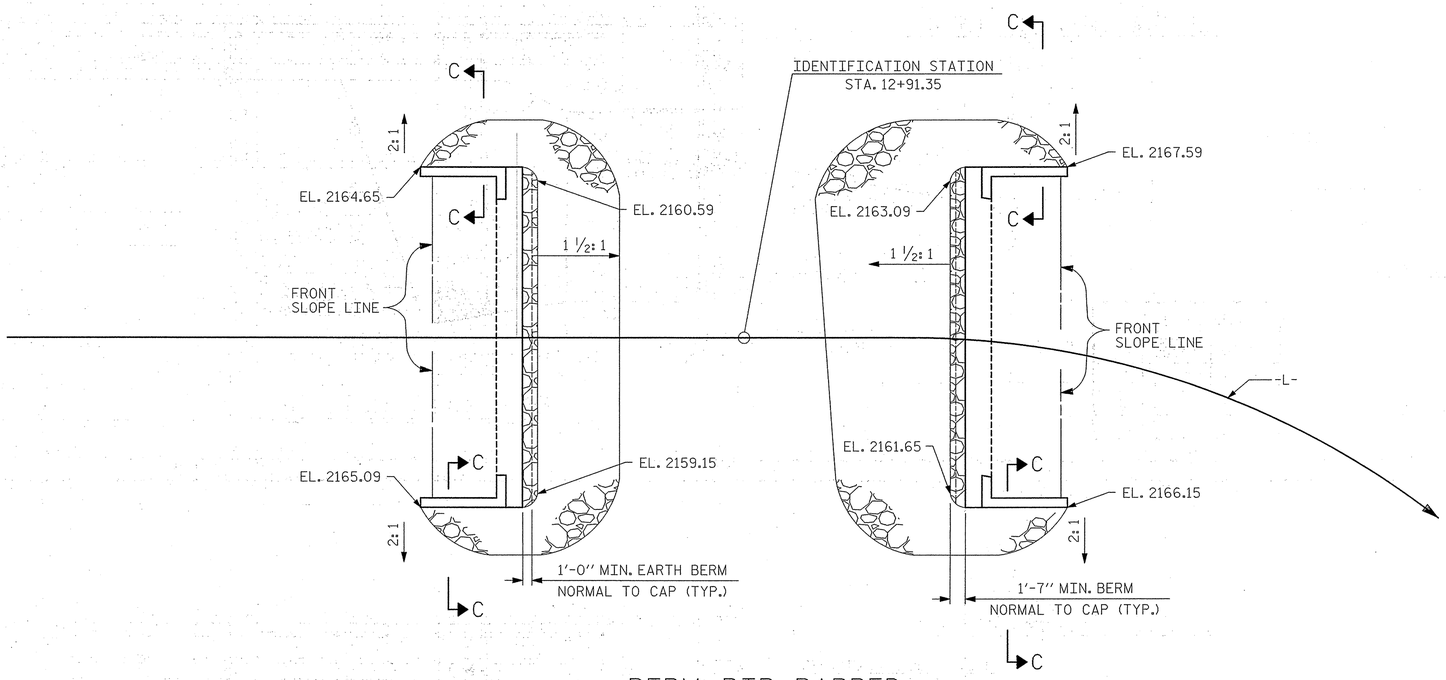

BERM RIP RAPPED

ESTIMATED QUANTITIES		
BRIDGE @ STA. 12+91.35 -L-	RIP RAP CLASS II (2'-0" THICK)	GEOTEXTILE FOR DRAINAGE
	TONS	SQUARE YARDS
END BENT 1	61	68
END BENT 2	86	96

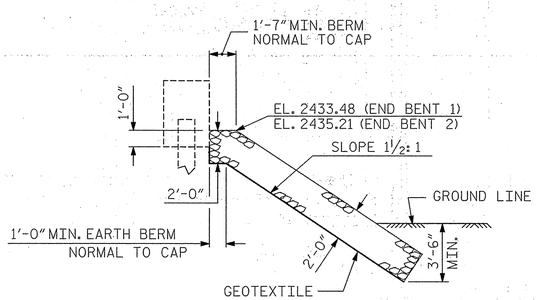

℄ SECTION

BERM RIP RAPPED

SEE PLAN FOR ELEVATIONS.

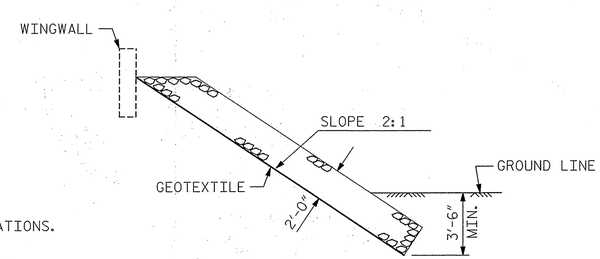

SECTION C-C

PROJECT NO. 17BP.14.R.73

MACON COUNTY

STATION: 12+91.35 -L-

STATE OF NORTH CAROLINA
DEPARTMENT OF TRANSPORTATION
RALEIGH

STANDARD

RIP RAP DETAILS

ASSEMBLED BY : PFC	DATE : 06/13		
CHECKED BY : CMT	DATE : 06/13		
DRAWN BY : REK 1/84	REV. 5/1/06R	TLA/GM	
CHECKED BY : RDU 1/84	REV. 10/1/11	MAA/GM	
	REV. 12/21/11	MAA/GM	

Prepared in the Office of: Mattern & Craig
CONSULTING ENGINEERS - SURVEYORS
12 BROAD STREET
ASHEVILLE, NORTH CAROLINA 28801
(828) 254-2201 - FAX (828) 254-4562

NORTH CAROLINA PROFESSIONAL SEAL 14389 ENGINEER STEVEN A. CAMPBELL 6/21/13

REVISIONS						SHEET NO.
NO.	BY:	DATE:	NO.	BY:	DATE:	S-13
1			3			TOTAL SHEETS
2			4			14

$$$$$$SYSTIME$$$$$
$$$$$$$$$$$$$$$$$$$$DGN$$$$$$$$$$$$$$$$$$$$$$$$
$$$$USERNAME$$$$

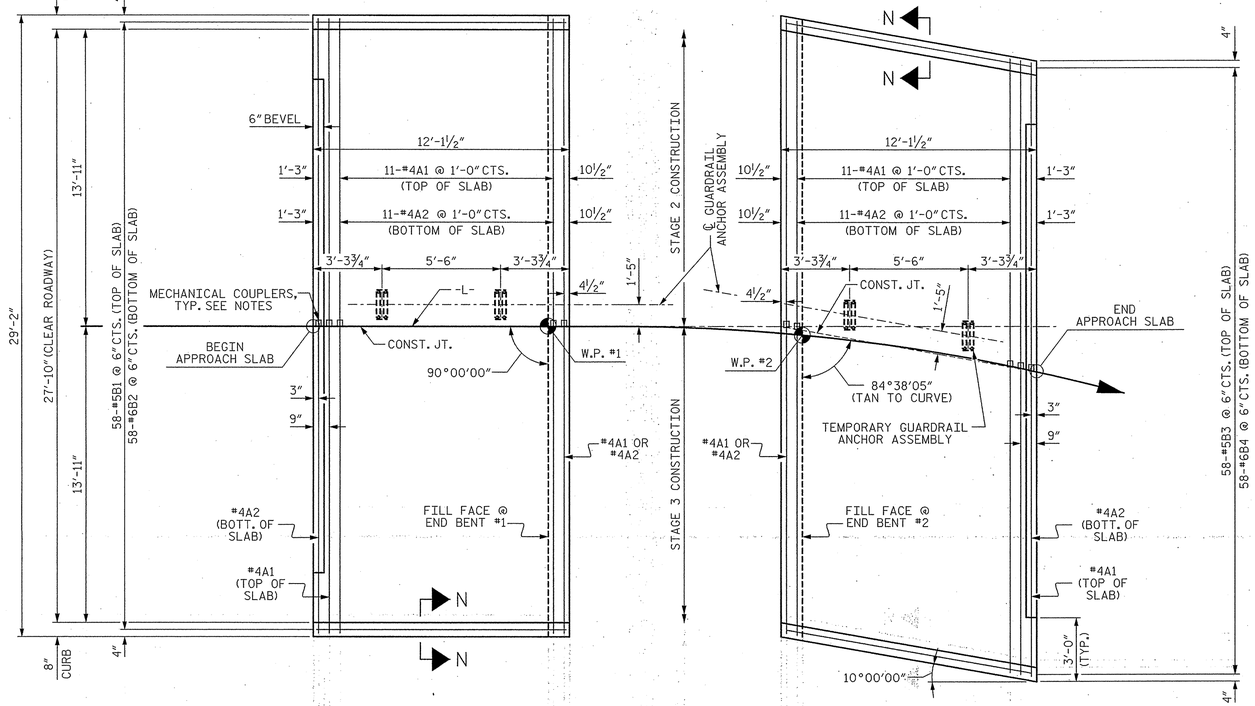

PLAN @ END BENT #1 PLAN @ END BENT #2

DIMENSIONS SHOWN ARE TYPICAL FOR BOTH APPROACH SLABS

NOTE: FOR MECHANICAL SPLICES SEE SECTION 425-5(B) OF THE STANDARD SPECIFICATIONS.

FOR TEMPORARY GUARDRAIL ANCHOR ASSEMBLY DETAILS, SEE SHEET S-4.

NOTES

FOR BRIDGE APPROACH FILL INCLUDING GEOTEXTILE, 4"Ø DRAINAGE PIPE, AND #78M STONE BACKFILL, SEE ROADWAY PLANS.

GEOTEXTILE SHALL BE TYPE 1IN ACCORDANCE WITH THE STANDARD SPECIFICATIONS SECTION 1056.

#78M STONE BACKFILL (CLASS V SELECT MATERIAL) SHALL BE IN ACCORDANCE WITH STANDARD SPECIFICATIONS SECTION 1016.

#78M STONE BACKFILL IS TO BE CONTINUOUS ALONG FILL FACE OF BACKWALL FROM OUTSIDE EDGE TO OUTSIDE EDGE OF APPROACH SLAB.

FOR THE 4"Ø DRAINAGE PIPE OUTLET(S), SEE ROADWAY STANDARD DRAWINGS.

AREA BETWEEN THE WINGWALL AND APPROACH SLAB SHALL BE GRADED TO DRAIN THE WATER AWAY FROM THE FILL FACE OF THE BRIDGE AND SHALL BE PAVED. SEE ROADWAY PLANS.

APPROACH SLAB GROOVING IS NOT REQUIRED.

BILL OF MATERIAL

APPROACH SLAB AT EB #1

BAR	NO.	SIZE	TYPE	LENGTH	WEIGHT
* A1	26	#4	STR	14'-5"	250
A2	26	#4	STR	14'-5"	250
* B1	58	#5	STR	11'-2"	676
B2	58	#6	STR	11'-8"	1016
REINFORCING STEEL				LBS.	1266
* EPOXY COATED REINFORCING STEEL				LBS.	926
CLASS AA CONCRETE				C.Y.	16.9

APPROACH SLAB AT EB #2

BAR	NO.	SIZE	TYPE	LENGTH	WEIGHT
* A1	26	#4	STR	14'-5"	250
A2	26	#4	STR	14'-5"	250
* B3	58	#5	STR	11'-4"	686
B4	58	#6	STR	11'-10"	1031
REINFORCING STEEL				LBS.	1266
* EPOXY COATED REINFORCING STEEL				LBS.	926
CLASS AA CONCRETE				C.Y.	16.9

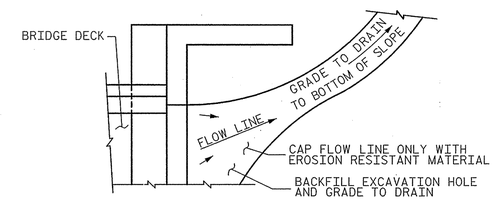

NOTE: IF THE APPROACH SLAB IS NOT CONSTRUCTED IMMEDIATELY AFTER THE BACKFILLING OF THE END BENT EXCAVATION, GRADE TO DRAIN TO THE BOTTOM OF THE SLOPE AND PROVIDE EROSION RESISTANT MATERIAL, SUCH AS FIBERGLASS ROVING OR AS DIRECTED BY THE ENGINEER TO PREVENT SOIL EROSION AND TO PROTECT THE AREA ADJACENT TO THE STRUCTURE. THE CONTRACTOR WILL BE REQUIRED TO REMOVE THESE MATERIALS PRIOR TO CONSTRUCTION OF THE APPROACH SLAB.

TEMPORARY DRAINAGE DETAIL

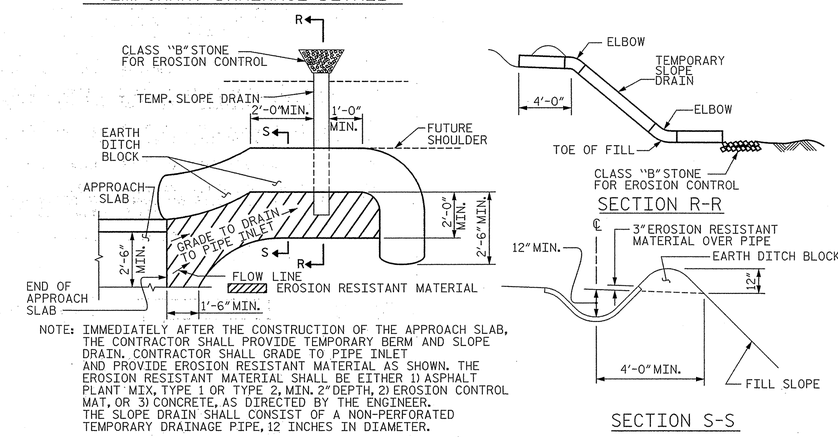

NOTE: IMMEDIATELY AFTER THE CONSTRUCTION OF THE APPROACH SLAB, THE CONTRACTOR SHALL PROVIDE TEMPORARY BERM AND SLOPE DRAIN. CONTRACTOR SHALL GRADE TO PIPE INLET AND PROVIDE EROSION RESISTANT MATERIAL AS SHOWN. THE EROSION RESISTANT MATERIAL SHALL BE EITHER 1) ASPHALT PLANT MIX, TYPE 1 OR TYPE 2, MIN. 2" DEPTH, 2) EROSION CONTROL MAT, OR 3) CONCRETE, AS DIRECTED BY THE ENGINEER. THE SLOPE DRAIN SHALL CONSIST OF A NON-PERFORATED TEMPORARY DRAINAGE PIPE, 12 INCHES IN DIAMETER.

PLAN VIEW

TEMPORARY BERM AND SLOPE DRAIN DETAILS

(TO BE USED WHEN SHOULDER BERM GUTTER IS REQUIRED)

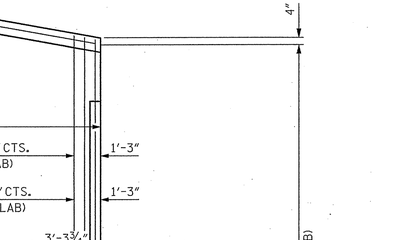

INSET SHOWING W.P. #2

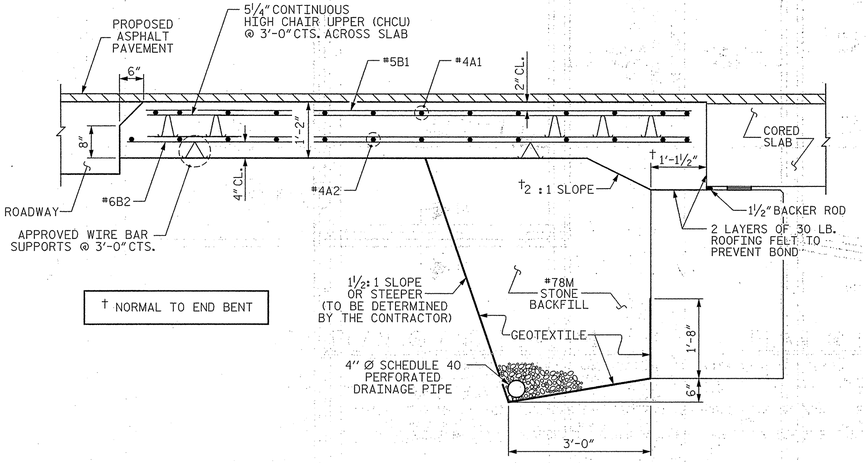

† NORMAL TO END BENT

SECTION THRU SLAB

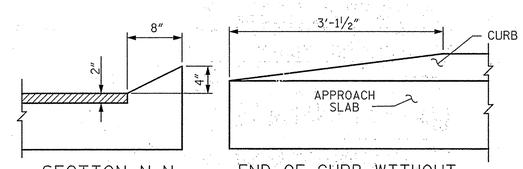

SECTION N-N END OF CURB WITHOUT SHOULDER BERM GUTTER

CURB DETAILS

SPLICE LENGTHS		
BAR SIZE	EPOXY COATED	UNCOATED
#4	2'-0"	1'-9"
#5	2'-6"	2'-2"
#6	3'-10"	2'-7"

PROJECT NO. 17BP.14.R.73

MACON COUNTY

STATION: 12+91.35 -L-

STATE OF NORTH CAROLINA
DEPARTMENT OF TRANSPORTATION
RALEIGH

BRIDGE APPROACH SLAB FOR PRESTRESSED CONCRETE CORED SLAB UNIT (SUB-REGIONAL TIER) 90° SKEW

NORTH CAROLINA PROFESSIONAL SEAL 14309 ENGINEER STEVEN A. CAMPBELL 6/27/13

Prepared in the Office of: Mattern & Craig
CONSULTING ENGINEERS - SURVEYORS
12 BROAD STREET
ASHEVILLE, NORTH CAROLINA 28801
(828) 254-2201 - FAX (828) 254-4562

REVISIONS						SHEET NO.
NO.	BY:	DATE:	NO.	BY:	DATE:	S-14
1			3			TOTAL SHEETS
2			4			14

ASSEMBLED BY :	PFC	DATE :	06/13
CHECKED BY :	CMT	DATE :	06/13
DRAWN BY : SHS/MAA	5-09	REV. 12-11	MAA/AAC
CHECKED BY : BCH	5-09		

$$$$$$SYSTIME$$$$$
$$$$$$$$$$$$$$$$$$$$$$$$DGN$$$$$$$$$$$$$$$$$$$$$$$$
$$$$USERNAME$$$$

STD. NO. BAS_30_90S

STANDARD NOTES

DESIGN DATA:

SPECIFICATIONS	A.A.S.H.T.O. (CURRENT)
LIVE LOAD	SEE PLANS
IMPACT ALLOWANCE	SEE A.A.S.H.T.O.
STRESS IN EXTREME FIBER OF	
STRUCTURAL STEEL - AASHTO M270 GRADE 36	20,000 LBS. PER SQ. IN.
- AASHTO M270 GRADE 50W	27,000 LBS. PER SQ. IN.
- AASHTO M270 GRADE 50	27,000 LBS. PER SQ. IN.
REINFORCING STEEL IN TENSION	
GRADE 60	24,000 LBS. PER SQ. IN.
CONCRETE IN COMPRESSION	1,200 LBS. PER SQ. IN.
CONCRETE IN SHEAR	SEE A.A.S.H.T.O.
STRUCTURAL TIMBER - TREATED OR	
UNTREATED - EXTREME FIBER STRESS	1,800 LBS. PER SQ. IN.
COMPRESSION PERPENDICULAR TO GRAIN OF TIMBER	375 LBS. PER SQ. IN.
EQUIVALENT FLUID PRESSURE OF EARTH	30 LBS. PER CU. FT. (MINIMUM)

MATERIAL AND WORKMANSHIP:

EXCEPT AS MAY OTHERWISE BE SPECIFIED ON PLANS OR IN THE SPECIAL PROVISIONS, ALL MATERIAL AND WORKMANSHIP SHALL BE IN ACCORDANCE WITH THE 2012 "STANDARD SPECIFICATIONS FOR ROADS AND STRUCTURES" OF THE N. C. DEPARTMENT OF TRANSPORTATION.

STEEL SHEET PILING FOR PERMANENT OR TEMPORARY APPLICATIONS SHALL BE HOT ROLLED.

CONCRETE:

UNLESS OTHERWISE REQUIRED ON PLANS, CLASS A CONCRETE SHALL BE USED FOR ALL PORTIONS OF ALL STRUCTURES WITH THE EXCEPTION THAT: CLASS AA CONCRETE SHALL BE USED IN BRIDGE SUPERSTRUCTURES, ABUTMENT BACKWALLS, AND APPROACH SLABS; AND CLASS B CONCRETE SHALL BE USED FOR SLOPE PROTECTION AND RIP RAP.

CONCRETE CHAMFERS:

UNLESS OTHERWISE NOTED ON THE PLANS, ALL EXPOSED CORNERS ON STRUCTURES SHALL BE CHAMFERED 3/4" WITH THE FOLLOWING EXCEPTIONS: TOP CORNERS OF CURBS MAY BE ROUNDED TO 1-1/2" RADIUS WHICH IS BUILT INTO CURB FORMS; CORNERS OF TRANSVERSE FLOOR EXPANSION JOINTS SHALL BE ROUNDED WITH A 1/4" FINISHING TOOL UNLESS OTHERWISE REQUIRED ON PLANS; AND CORNERS OF EXPANSION JOINTS IN THE ROADWAY FACES AND TOPS OF CURBS AND SIDEWALKS SHALL BE ROUNDED TO A 1/4" RADIUS WITH A FINISHING STONE OR TOOL UNLESS OTHERWISE REQUIRED ON PLANS.

DOWELS:

DOWELS WHEN INDICATED ON PLANS AS FOR CULVERT EXTENSIONS, SHALL BE EMBEDDED AT LEAST 12" INTO THE OLD CONCRETE AND GROUTED INTO PLACE WITH 1:2 CEMENT MORTAR.

ALLOWANCE FOR DEAD LOAD DEFLECTION, SETTLEMENT, ETC. IN CASTING SUPERSTRUCTURES:

BRIDGES SHALL BE BUILT ON THE GRADE OR VERTICAL CURVE SHOWN ON PLANS. SLABS, CURBS AND PARAPETS SHALL CONFORM TO THE GRADE OR CURVE.

ALL DIMENSIONS WHICH ARE GIVEN IN SECTION AND ARE AFFECTED BY DEAD LOAD DEFLECTIONS ARE DIMENSIONS AT CENTER LINE OF BEARING UNLESS OTHERWISE NOTED ON PLANS. IN SETTING FORMS FOR STEEL BEAM BRIDGES AND PRESTRESSED CONCRETE GIRDER BRIDGES, ADJUSTMENTS SHALL BE MADE DUE TO THE DEAD LOAD DEFLECTIONS FOR THE ELEVATIONS SHOWN. WHERE BLOCKS ARE SHOWN OVER BEAMS FOR BUILDING UP TO THE SLAB, THE VERTICAL DIMENSIONS OF THE BLOCKS SHALL BE ADJUSTED BETWEEN BEARINGS TO COMPENSATE FOR DEAD LOAD DEFLECTIONS, VERTICAL CURVE ORDINATE, AND ACTUAL BEAM CAMBER. WHERE BOTTOM OF SLAB IS IN LINE WITH BOTTOM OF TOP FLANGES, DEPTH OF SLAB BETWEEN BEARINGS SHALL BE ADJUSTED TO COMPENSATE FOR DEAD LOAD DEFLECTION, VERTICAL CURVE ORDINATE, AND ACTUAL BEAM CAMBER.

IN SETTING FALSEWORK AND FORMS FOR REINFORCED CONCRETE SPANS, AN ALLOWANCE SHALL BE MADE FOR DEAD LOAD DEFLECTIONS, SETTLEMENT OF FALSEWORK, AND PERMANENT CAMBER WHICH SHALL BE PROVIDED FOR IN ADDITION TO THE ELEVATIONS SHOWN. AFTER REMOVAL OF THE FALSEWORK, THE FINISHED STRUCTURES SHALL CONFORM TO THE PROFILE AND ELEVATIONS SHOWN ON THE PLANS AND CONSTRUCTION ELEVATIONS FURNISHED BY THE ENGINEER.

DETAILED DRAWINGS FOR FALSEWORK OR FORMS FOR BRIDGE SUPERSTRUCTURE AND ANY STRUCTURE OR PARTS OF A STRUCTURE AS NOTED ON THE PLANS SHALL BE SUBMITTED TO THE ENGINEER FOR APPROVAL BEFORE CONSTRUCTION OF THE FALSEWORK OR FORMS IS STARTED.

REINFORCING STEEL:

ALL REINFORCING STEEL SHALL BE DEFORMED. DIMENSIONS RELATIVE TO PLACEMENT OF REINFORCING ARE TO CENTERS OF BARS UNLESS OTHERWISE INDICATED IN THE PLANS. DIMENSIONS ON BAR DETAILS ARE TO CENTERS OF BARS OR ARE OUT TO OUT AS INDICATED ON PLANS.

WIRE BAR SUPPORTS SHALL BE PROVIDED FOR REINFORCING STEEL WHERE INDICATED ON THE PLANS. WHEN BAR SUPPORT PIECES ARE PLACED IN CONTINUOUS LINES, THEY SHALL BE SO PLACED THAT THE ENDS OF THE SUPPORTING WIRES SHALL BE LAPPED TO LOCK LEGS ON ADJOINING PIECES.

STRUCTURAL STEEL:

AT THE CONTRACTOR'S OPTION, HE MAY SUBSTITUTE 7/8" Ø SHEAR STUDS FOR THE 3/4" Ø STUDS SPECIFIED ON THE PLANS. THIS SUBSTITUTION SHALL BE MADE AT THE RATE OF 3 - 7/8" Ø STUDS FOR 4 - 3/4" Ø STUDS, AND STUD SPACING CHANGES SHALL BE MADE AS NECESSARY TO PROVIDE THE SAME EQUIVALENT NUMBER OF 7/8" Ø STUDS ALONG THE BEAM AS SHOWN FOR 3/4" Ø STUDS BASED ON THE RATIO OF 3 - 7/8" Ø STUDS FOR 4 - 3/4" Ø STUDS. STUDS OF THE LENGTH SPECIFIED ON THE PLANS MUST BE PROVIDED. THE MAXIMUM SPACING SHALL BE 2'-0".

EXCEPT AT THE INTERIOR SUPPORTS OF CONTINUOUS BEAMS WHERE THE COVER PLATE IS IN CONTACT WITH BEARING PLATE, THE CONTRACTOR MAY, AT HIS OPTION, SUBSTITUTE FOR THE COVER PLATES DESIGNATED ON THE PLANS COVER PLATES OF THE EQUIVALENT AREA PROVIDED THESE PLATES ARE AT LEAST 5/16" IN THICKNESS AND DO NOT EXCEED A WIDTH EQUAL TO THE FLANGE WIDTH LESS 2" OR A THICKNESS EQUAL TO 2 TIMES THE FLANGE THICKNESS. THE SIZE OF FILLET WELDS SHALL CONFORM TO THE REQUIREMENTS OF THE CURRENT ANSI/AASHTO/AWS "BRIDGE WELDING CODE". ELECTROSLAG WELDING WILL NOT BE PERMITTED.

WITH THE SOLE EXCEPTION OF EDGES AT SURFACES WHICH BEAR ON OTHER SURFACES, ALL SHARP EDGES AND ENDS OF SHAPES AND PLATES SHALL BE SLIGHTLY ROUNDED BY SUITABLE MEANS TO A RADIUS OF APPROXIMATELY 1/16 INCH OR EQUIVALENT FLAT SURFACE AT A SUITABLE ANGLE PRIOR TO PAINTING, GALVANIZING, OR METALLIZING.

HANDRAILS AND POSTS:

METAL STANDARDS AND FACES OF THE CONCRETE END POSTS FOR THE METAL RAIL SHALL BE SET NORMAL TO THE GRADE OF THE CURB, UNLESS OTHERWISE SHOWN ON PLANS. THE METAL RAIL AND TOPS OF CONCRETE POSTS USED WITH THE ALUMINUM RAIL SHALL BE BUILT PARALLEL TO THE GRADE OF THE CURB.

METAL HANDRAILS SHALL BE IN ACCORDANCE WITH THE PLANS. RAILS SHALL BE AS MANUFACTURED FOR BRIDGE RAILING. CASTINGS SHALL BE OF A UNIFORM APPEARANCE. FINS AND OTHER DEFORMATIONS RESULTING FROM CASTING OR OTHERWISE SHALL BE REMOVED IN A MANNER SO THAT A UNIFORM COLORING OF THE COMPLETED CASTING SHALL BE OBTAINED. CASTINGS WITH DISCOLORATIONS OR OF NON-UNIFORM COLORING WILL NOT BE ACCEPTED. CERTIFIED MILL REPORTS ARE REQUIRED FOR METAL RAILS AND POSTS.

SPECIAL NOTES:

GENERALLY, IN CASE OF DISCREPANCY, THIS STANDARD SHEET OF NOTES SHALL GOVERN OVER THE SPECIFICATIONS, BUT THE REMAINDER OF THE PLANS SHALL GOVERN OVER NOTES HEREON, AND SPECIAL PROVISIONS SHALL GOVERN OVER ALL. SEE SPECIFICATIONS ARTICLE 105-4.

ENGLISH

JANUARY, 1990

STD. NO. SN