This electronic collection of documents is provided for the convenience of the user and is Not a Certified Document –

The documents contained herein were originally issued and sealed by the individuals whose names and license numbers appear on each page, on the dates appearing with their signature on that page.
This file or an individual page shall not be considered a certified document.

TIP PROJECT: SS-4914CJ

CONTRACT: DN00624

10/03/2017

STATE OF NORTH CAROLINA
DIVISION OF HIGHWAYS

STATE	STATE PROJECT REFERENCE NO.	SHEET NO.	TOTAL SHEETS
N.C.	SS-4914CJ	1	

TIP NO.	WBS NO	DESCRIPTION
SS-4914CJ	44730.3.1	

HENDERSON COUNTY

LOCATION: SR 1127 CRAB CREEK ROAD FROM TRANSYVANIA COUNTY LINE TO SR 1123 LITTLE RIVER ROAD

TYPE OF WORK: GUARDRAIL INSTALLATION AND TRAFFIC CONTROL.

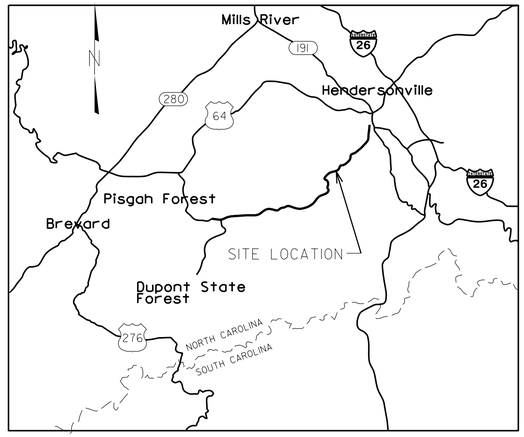

SR 1126 VICINITY MAP
NOT TO SCALE

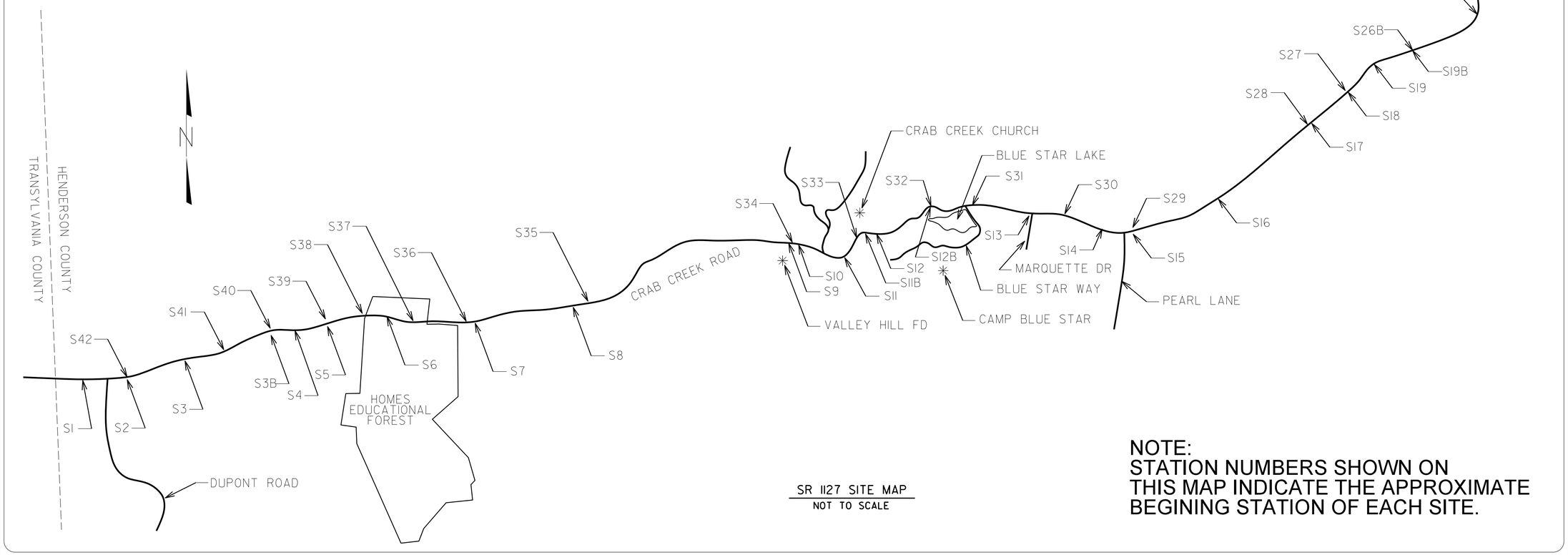

SR 1127 SITE MAP
NOT TO SCALE

NOTE:
STATION NUMBERS SHOWN ON THIS MAP INDICATE THE APPROXIMATE BEGINING STATION OF EACH SITE.

PROJECT LENGTH

SS-4914CJ (7.34 miles)

Prepared in the Office of:
DIVISION OF HIGHWAYS
1000 Birch Ridge Dr., Raleigh NC, 27610

2012 STANDARD SPECIFICATIONS

RIGHT OF WAY DATE:

LETTING DATE:

S.L. Cannon, PE
PROJECT ENGINEER

R.C. Chambard
PROJECT DESIGN ENGINEER

HYDRAULICS ENGINEER

SIGNATURE: P.E.

ROADWAY DESIGN ENGINEER

SIGNATURE: P.E.

STATE OF NORTH CAROLINA • DEPARTMENT OF TRANSPORTATION

PROJECT REFERENCE NO.	SHEET NO.
SS-4914CJ	1A

INDEX OF SHEETS

SHEET NUMBER:	SHEET:
1	TITLE SHEET
1A	INDEX OF SHEETS
1B	CONVENTIONAL SYMBOLS
2C-1 thru 2C-27	STANDARD DRAWINGS 862.01, 862.02, 862.03
3B-1 thru 3B-3	GUARDRAIL SUMMARY SHEETS
4	SITE 1
5	SITE 2
6	SITE 3
7	SITE 3-B
8	SITE 4
9	SITE 5
10	SITE 6
11	SITE 7
12	SITE 8
13	SITE 9
14	SITE 10
15	SITE 11
16	SITE 11-B
17	SITE 12
18	SITE 12-B
19	SITE 13
20	SITE 14
21	SITE 15
22	SITE 16
23	SITE 17
24	SITE 18
25	SITE 19
26	SITE 19-B
27	SITE 20
28	SITE 21
29	SITE 22
30	SITE 23
31	SITE 24
32	SITE 25
33	SITE 26
34	SITE 26-B
35	SITE 27
36	SITE 28
37	SITE 29
38	SITE 30
39	SITE 31
40	SITE 32
41	SITE 33
42	SITE 34
43	SITE 35
44	SITE 36
45	SITE 37
46	SITE 38
47	SITE 39
48	SITE 40
49	SITE 41
50	SITE 42

General Notes:

THE GUARDRAIL LOCATIONS SHOWN ON THE PLANS MAY BE ADJUSTED DURING CONSTRUCTION AS DIRECTED BY THE ENGINEER. THE CONTRACTOR SHOULD CONSULT WITH THE ENGINEER PRIOR TO ORDERING GUARDRAIL MATERIAL

NO SUBSURFACE PLANS ARE AVAILABLE ON THIS PROJECT. THE CONTRACTOR SHOULD MAKE HIS OWN INVESTIGATION AS TO THE SUBSURFACE CONDITIONS.

EACH OF THE GUARDRAIL SITES LISTED IN THESE PLANS HAVE BEEN IDENTIFIED AND MARKED IN THE FIELD PRIOR TO THE LET OF THIS CONTRACT.

MARKINGS OF EACH SITE INCLUDE "WHITE' PAINT ON THE PAVEMENT INDICATING THE STATION AND THE END UNIT TYPE, & 4 FOOT STAKE WITH SITE NUMBER.

ALL THE STANDARD DRAWINGS LISTED IN THIS CONTRACT, MAY OR MAY NOT BE APPLICABLE.

REVISIONS HAVE BEEN MADE TO THE STANDARD DRAWINGS TO INCLUDE THE USE OF 31" MASH COMPLIANT GUARDRAIL PLACEMENT (862.01, 862.02, 862.03, 862.04)

UTILITY OWNERS ON THIS PROJECT ARE

Morris Broadband LLC. (828-772-1167), AT&T (1-800-778-9140),

Duke Energy (1-800-769-3766),

ANY RELOCATION OF EXISTING UTILITIES WILL BE ACCOMPLISHED BY OTHERS.

2012 ROADWAY ENGLISH STANDARD DRAWINGS

EFF. 01-17-2012
REV. 10-30-2012

The following Roadway Standards as appear in "Roadway Standard Drawings" Highway Design Branch – N. C. Department of Transportation – Raleigh, N. C., Dated January, 2012 are applicable to this project and by reference hereby are considered a part of these plans:

STD.NO.	TITLE
DIVISION 8 –	INCIDENTALS
862.01	Guardrail Placement
862.02	Guardrail Installation
862.03	Structure Anchor Units
862.04	Anchoring End of Guardrail – B-77 and B-83 Anchor Units

10/03/2017

PROJECT REFERENCE NO.	SHEET NO.
SS-4914CJ	1B

STATE OF NORTH CAROLINA, DIVISION OF HIGHWAYS

CONVENTIONAL PLAN SHEET SYMBOLS

Note: Not to Scale **S.U.E. = Subsurface Utility Engineering*

BOUNDARIES AND PROPERTY:

- State Line
- County Line
- Township Line
- City Line
- Reservation Line
- Property Line
- Existing Iron Pin — EIP
- Computed Property Corner
- Property Monument — ECM
- Parcel/Sequence Number — 123
- Existing Fence Line
- Proposed Woven Wire Fence
- Proposed Chain Link Fence
- Proposed Barbed Wire Fence
- Existing Wetland Boundary — WLB
- Proposed Wetland Boundary — WLB
- Existing Endangered Animal Boundary — EAB
- Existing Endangered Plant Boundary — EPB
- Existing Historic Property Boundary — HPB
- Known Contamination Area: Soil — S
- Potential Contamination Area: Soil — S
- Known Contamination Area: Water — W
- Potential Contamination Area: Water — W
- Contaminated Site: Known or Potential

BUILDINGS AND OTHER CULTURE:

- Gas Pump Vent or U/G Tank Cap
- Sign — S
- Well — W
- Small Mine
- Foundation
- Area Outline
- Cemetery
- Building
- School
- Church
- Dam

HYDROLOGY:

- Stream or Body of Water
- Hydro, Pool or Reservoir
- Jurisdictional Stream — JS
- Buffer Zone 1 — BZ 1
- Buffer Zone 2 — BZ 2
- Flow Arrow
- Disappearing Stream
- Spring
- Wetland
- Proposed Lateral, Tail, Head Ditch — FLOW
- False Sump

RAILROADS:

- Standard Gauge — CSX TRANSPORTATION
- RR Signal Milepost — MILEPOST 35
- Switch — SWITCH
- RR Abandoned
- RR Dismantled

RIGHT OF WAY & PROJECT CONTROL:

- Secondary Horiz and Vert Control Point
- Primary Horiz Control Point
- Primary Horiz and Vert Control Point
- Exist Permanent Easment Pin and Cap
- New Permanent Easement Pin and Cap
- Vertical Benchmark
- Existing Right of Way Marker
- Existing Right of Way Line
- New Right of Way Line — RW
- New Right of Way Line with Pin and Cap — RW
- New Right of Way Line with Concrete or Granite R/W Marker — RW
- New Control of Access Line with Concrete C/A Marker — CA
- Existing Control of Access — CA
- New Control of Access — CA
- Existing Easement Line — E
- New Temporary Construction Easement — E
- New Temporary Drainage Easement — TDE
- New Permanent Drainage Easement — PDE
- New Permanent Drainage / Utility Easement — DUE
- New Permanent Utility Easement — PUE
- New Temporary Utility Easement — TUE
- New Aerial Utility Easement — AUE

ROADS AND RELATED FEATURES:

- Existing Edge of Pavement
- Existing Curb
- Proposed Slope Stakes Cut — C
- Proposed Slope Stakes Fill — F
- Proposed Curb Ramp — CR
- Existing Metal Guardrail
- Proposed Guardrail
- Existing Cable Guiderail
- Proposed Cable Guiderail
- Equality Symbol
- Pavement Removal

VEGETATION:

- Single Tree
- Single Shrub
- Hedge
- Woods Line
- Orchard
- Vineyard — Vineyard

EXISTING STRUCTURES:

MAJOR:

- Bridge, Tunnel or Box Culvert — CONC
- Bridge Wing Wall, Head Wall and End Wall — CONC WW

MINOR:

- Head and End Wall — CONC HW
- Pipe Culvert
- Footbridge
- Drainage Box: Catch Basin, DI or JB — CB
- Paved Ditch Gutter
- Storm Sewer Manhole — S
- Storm Sewer — S

UTILITIES:

POWER:

- Existing Power Pole
- Proposed Power Pole
- Existing Joint Use Pole
- Proposed Joint Use Pole
- Power Manhole — P
- Power Line Tower
- Power Transformer
- U/G Power Cable Hand Hole
- H-Frame Pole
- U/G Power Line LOS B (S.U.E.*) — P
- U/G Power Line LOS C (S.U.E.*) — P
- U/G Power Line LOS D (S.U.E.*) — P

TELEPHONE:

- Existing Telephone Pole
- Proposed Telephone Pole
- Telephone Manhole — T
- Telephone Pedestal — T
- Telephone Cell Tower
- U/G Telephone Cable Hand Hole — HH
- U/G Telephone Cable LOS B (S.U.E.*) — T
- U/G Telephone Cable LOS C (S.U.E.*) — T
- U/G Telephone Cable LOS D (S.U.E.*) — T
- U/G Telephone Conduit LOS B (S.U.E.*) — TC
- U/G Telephone Conduit LOS C (S.U.E.*) — TC
- U/G Telephone Conduit LOS D (S.U.E.*) — TC
- U/G Fiber Optics Cable LOS B (S.U.E.*) — T FO
- U/G Fiber Optics Cable LOS C (S.U.E.*) — T FO
- U/G Fiber Optics Cable LOS D (S.U.E.*) — T FO

WATER:

- Water Manhole — W
- Water Meter
- Water Valve
- Water Hydrant
- U/G Water Line LOS B (S.U.E*)
- U/G Water Line LOS C (S.U.E*)
- U/G Water Line LOS D (S.U.E*)
- Above Ground Water Line — A/G Water

TV:

- TV Pedestal — C
- TV Tower
- U/G TV Cable Hand Hole — HH
- U/G TV Cable LOS B (S.U.E.*) — TV
- U/G TV Cable LOS C (S.U.E.*) — TV
- U/G TV Cable LOS D (S.U.E.*) — TV
- U/G Fiber Optic Cable LOS B (S.U.E.*) — TV FO
- U/G Fiber Optic Cable LOS C (S.U.E.*) — TV FO
- U/G Fiber Optic Cable LOS D (S.U.E.*) — TV FO

GAS:

- Gas Valve
- Gas Meter
- U/G Gas Line LOS B (S.U.E.*) — G
- U/G Gas Line LOS C (S.U.E.*) — G
- U/G Gas Line LOS D (S.U.E.*) — G
- Above Ground Gas Line — A/G Gas

SANITARY SEWER:

- Sanitary Sewer Manhole
- Sanitary Sewer Cleanout
- U/G Sanitary Sewer Line — SS
- Above Ground Sanitary Sewer — A/G Sanitary Sewer
- SS Forced Main Line LOS B (S.U.E.*) — FSS
- SS Forced Main Line LOS C (S.U.E.*) — FSS
- SS Forced Main Line LOS D (S.U.E.*) — FSS

MISCELLANEOUS:

- Utility Pole
- Utility Pole with Base
- Utility Located Object
- Utility Traffic Signal Box — S
- Utility Unknown U/G Line LOS B (S.U.E.*) — ?UTL
- U/G Tank; Water, Gas, Oil
- Underground Storage Tank, Approx. Loc. — UST
- A/G Tank; Water, Gas, Oil
- Geoenvironmental Boring
- U/G Test Hole LOS A (S.U.E.*)
- Abandoned According to Utility Records — AATUR
- End of Information — E.O.I.

10/03/2017

PROJECT REFERENCE NO.	SHEET NO.
SS-4914CJ	2C-1

STD. DRAWING 862.01

STATE OF NORTH CAROLINA
DEPT. OF TRANSPORTATION
DIVISION OF HIGHWAYS
RALEIGH, N.C.

1-18

ROADWAY STANDARD DRAWING FOR
GUARDRAIL PLACEMENT

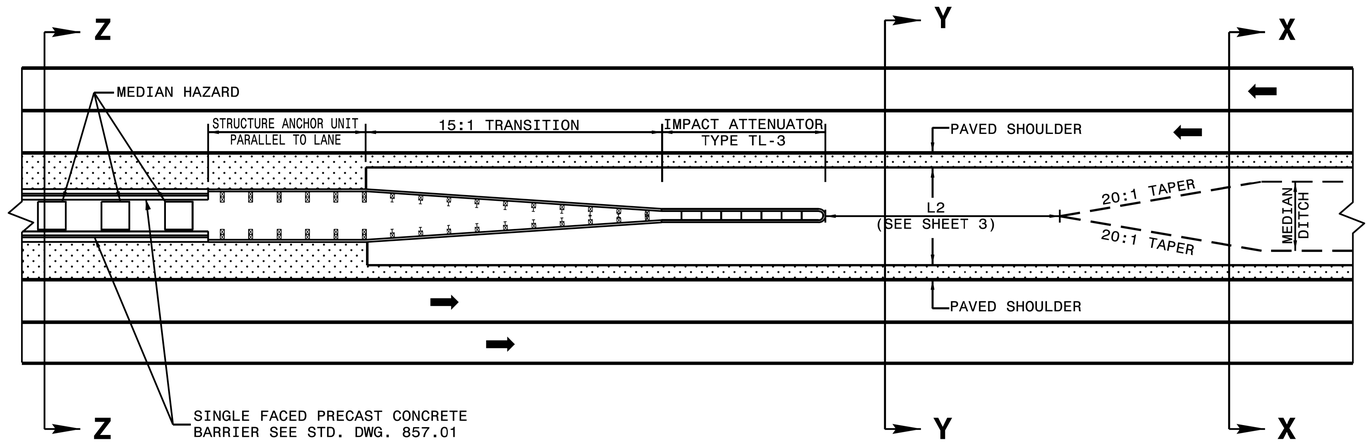

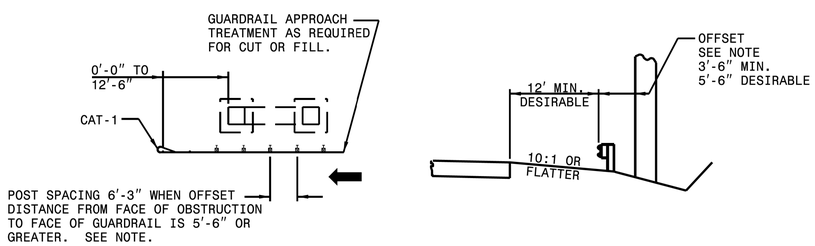

NOTE: WHEN OFFSET DISTANCE FROM FACE OF OBSTRUCTION TO FACE OF GUARDRAIL IS BETWEEN 3'-6" AND 5'-6", BEGIN 3'-1½" POST SPACING AT A POINT 25' BEFORE REACHING THE OBSTRUCTION AND CARRY THROUGHOUT ITS LENGTH. IF THE OFFSET IS LESS THAN 3'-6" USE CONCRETE BARRIER.

DETAIL OF RIGHT SIDE GUARDRAIL AT UNDERPASS

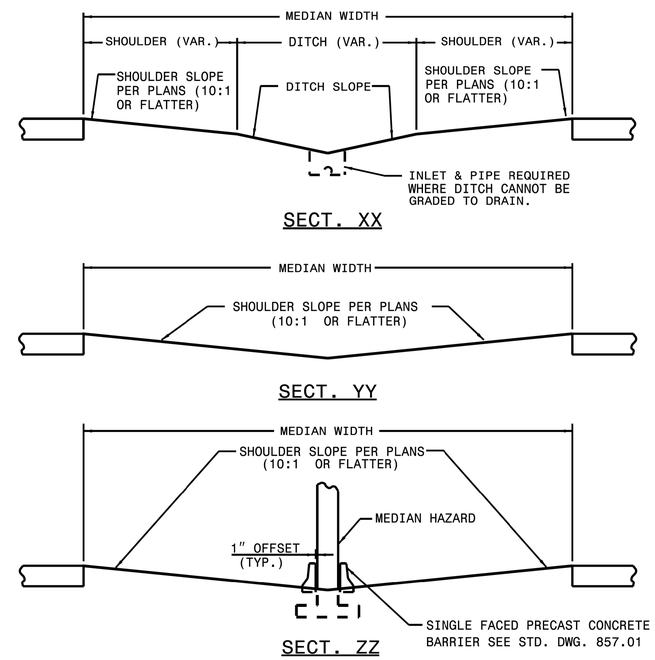

DETAIL OF MEDIAN TREATMENT AT UNDERPASS

STATE OF NORTH CAROLINA
DEPT. OF TRANSPORTATION
DIVISION OF HIGHWAYS
RALEIGH, N.C.

1-18

ROADWAY STANDARD DRAWING FOR
GUARDRAIL PLACEMENT

SHEET 1 OF 12
862.01

SHEET 1 OF 12
862.01

10/03/2017

PROJECT REFERENCE NO.	SHEET NO.
SS-4914CJ	2C-2

STD. DRAWING 862.01

STATE OF
NORTH CAROLINA
DEPT. OF TRANSPORTATION
DIVISION OF HIGHWAYS
RALEIGH, N.C.

1-18

ROADWAY STANDARD DRAWING FOR
GUARDRAIL PLACEMENT

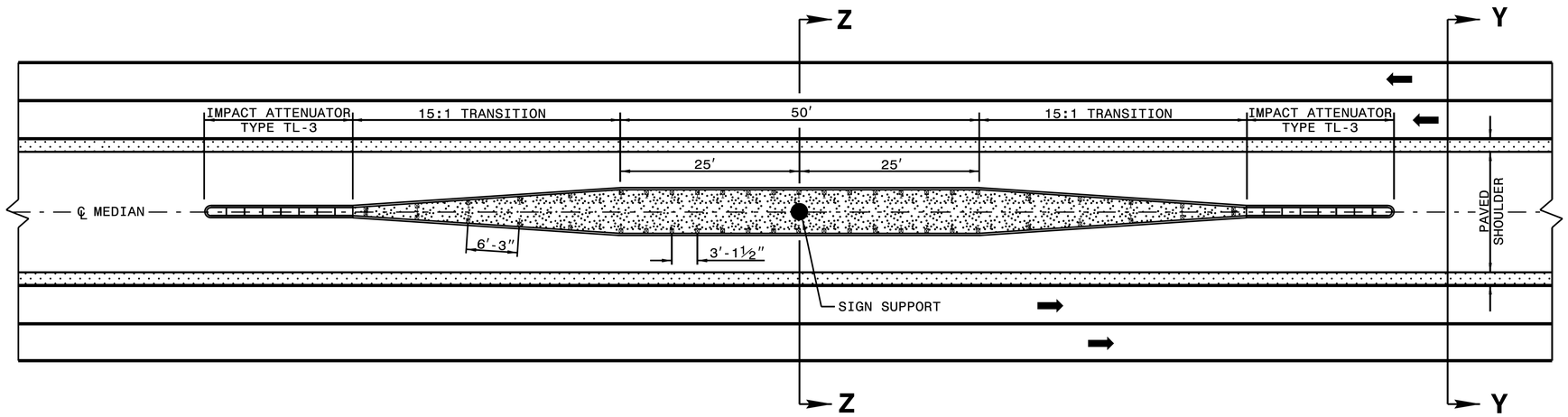

NOTE SPECIAL LAYER OF PAVEMENT .....

USE 3′-1½″ POST SPACING ON THE 50′ OF GUARDRAIL PARALLEL TO LANES AND 6′-3″ POST SPACING ON 15:1 TRANSITION SECTIONS.
GRADE MEDIAN IN THE VICINITY OF THE SIGN SUPPORT AS ILLUSTRATED IN THE ROADWAY STANDARD DRAWINGS (STARDARD 862.01 SHEET 1 OF 12).

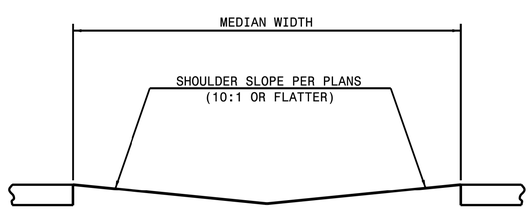

SECT. YY

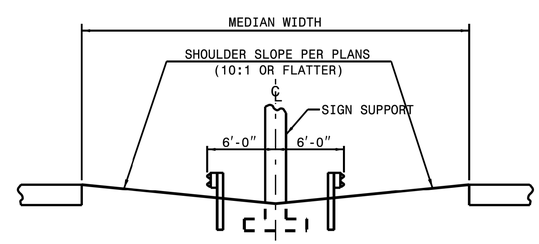

SECT. ZZ

DETAIL OF GUARDRAIL AT MEDIAN SIGN SUPPORT

SHEET 2 OF 12
862.01

STATE OF
NORTH CAROLINA
DEPT. OF TRANSPORTATION
DIVISION OF HIGHWAYS
RALEIGH, N.C.

1-18

ROADWAY STANDARD DRAWING FOR
GUARDRAIL PLACEMENT

SHEET 2 OF 12
862.01

10/03/2017

STATE OF NORTH CAROLINA
DEPT. OF TRANSPORTATION
DIVISION OF HIGHWAYS
RALEIGH, N.C.

1-18

ROADWAY STANDARD DRAWING FOR
GUARDRAIL PLACEMENT

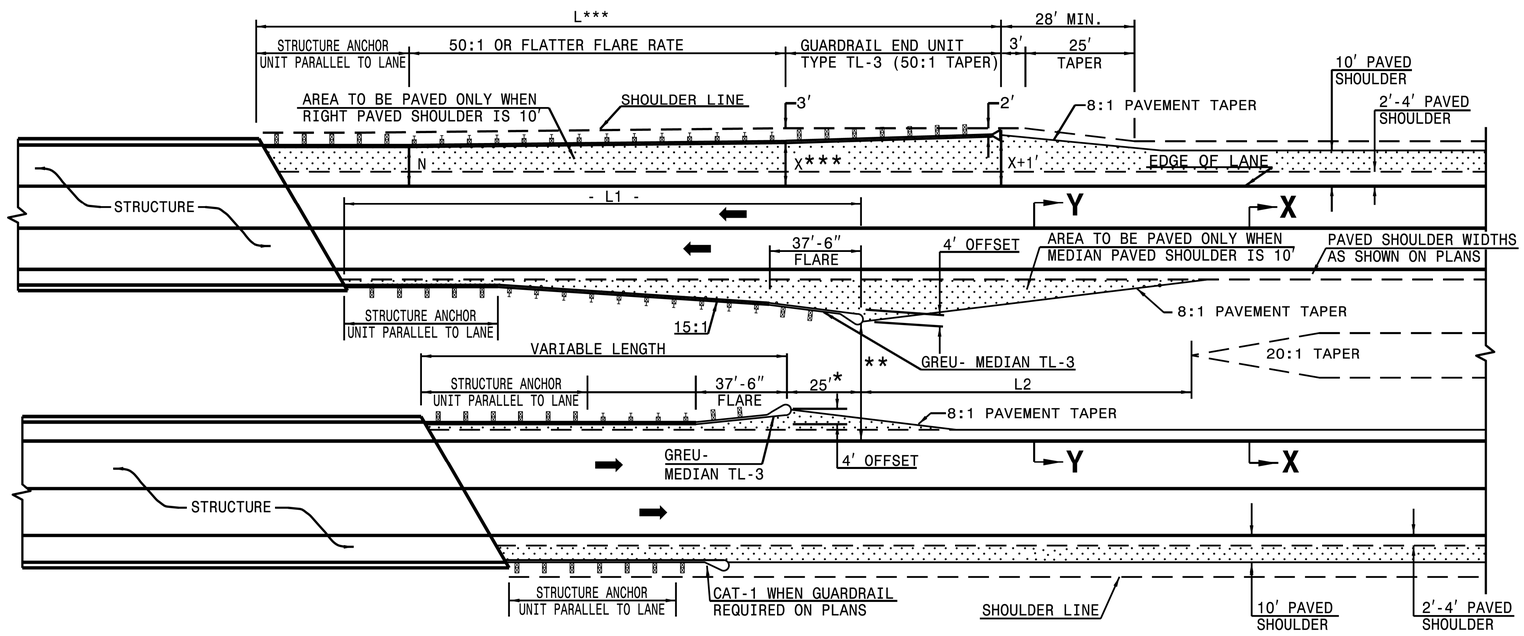

DIMENSIONS FOR LENGTH OF GUARDRAIL APPROACHING DUAL LANE BRIDGES							
MEDIAN WIDTH	-L-***			-L1-			-L2-
	70 MPH	60 MPH	50 MPH	70 MPH	60 MPH	50 MPH	DIM.
30'	300.0'	250.0'	150.0'	187.5'	162.5'	137.5'	80.0'
36'	300.0'	250.0'	150.0'	212.5'	187.5'	137.5'	60.0'
40' & ABOVE	300.0'	250.0'	150.0'	212.5'	187.5'	137.5'	40.0'

NOTES: * MINOR VARIATION TO THE 25'-0" DIMENSION IS PERMISSIBLE TO ACCOMODATE THE 12'-6" IN GUARDRAIL LENGTHS.

** NO GUARDRAIL IS REQUIRED ON THE TRAILING END WHEN THIS DISTANCE EXCEEDS CLEAR ROADSIDE RECOVERY AREA FOR THE APPROPRIATE DESIGN SPEED.

*** BASED ON "X" OF 12'
USE FLARE RATE AS THE CONTROL IF THE "X" DISTANCE IS NOT OBTAINED. ("X" IS BASED ON SHOULDER WIDTHS IN THE HIGHWAY DESIGN BRANCH MANUAL, PART 1, 1-4B, F1A).

"N"= DISTANCE FROM EDGE OF LANE TO FACE OF GUARDRAIL WHERE GUARDRAIL IS PARALLEL TO LANE.

THE DESIGN LAYOUT FOR LENGTHS SHOWN ON THIS STANDARD ARE MINIMUM DESIGN LENGTHS.

SEE SHEET 1 OF 12 FOR SECTIONS XX, YY

SEE STD. 862.03 FOR STRUCTURE ANCHOR UNITS

DETAIL OF GUARDRAIL APPROACHING DUAL LANE BRIDGES

STATE OF NORTH CAROLINA
DEPT. OF TRANSPORTATION
DIVISION OF HIGHWAYS
RALEIGH, N.C.

1-18

ROADWAY STANDARD DRAWING FOR
GUARDRAIL PLACEMENT

SHEET 3 OF 12
862.01

10/03/2017

STATE OF NORTH CAROLINA
DEPT. OF TRANSPORTATION
DIVISION OF HIGHWAYS
RALEIGH, N.C.

1-18

ROADWAY STANDARD DRAWING FOR
GUARDRAIL PLACEMENT

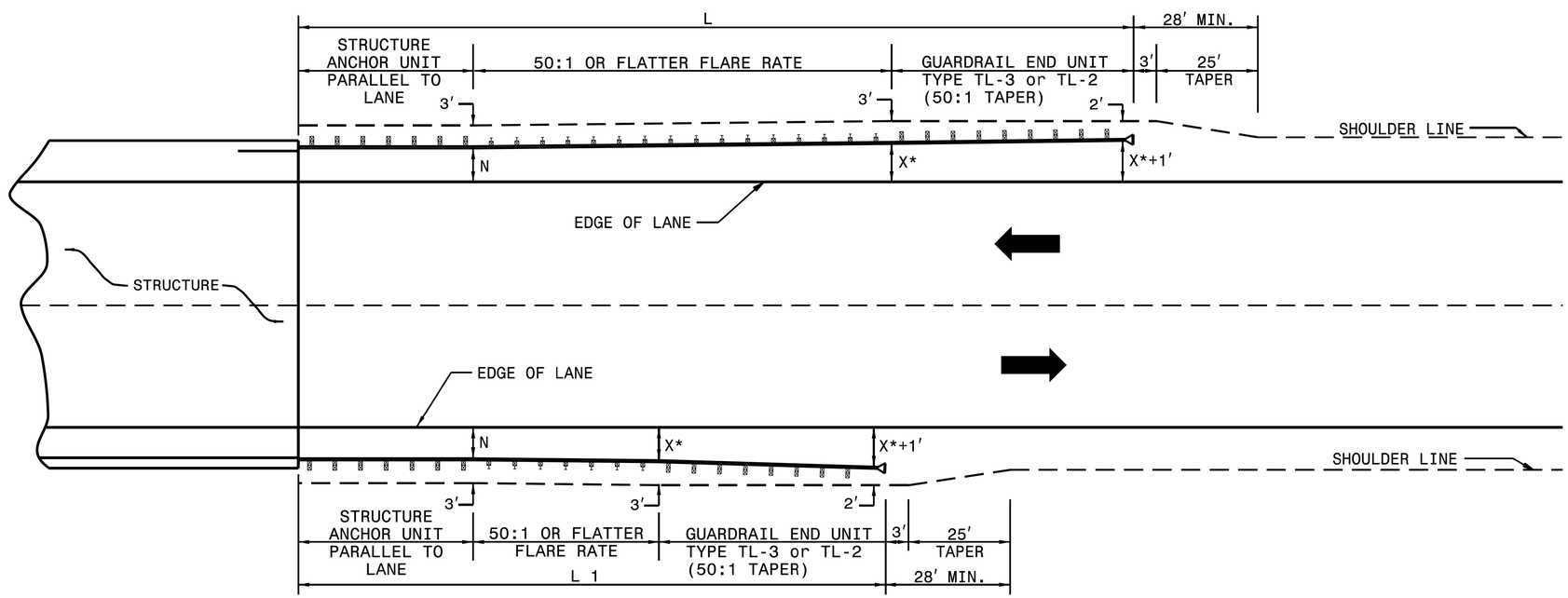

* USE FLARE RATE AS THE CONTROL IF THE "X" DISTANCE IS NOT OBTAINED. ("X" IS BASED ON SHOULDER WIDTHS IN THE HIGHWAY DESIGN BRANCH MANUAL, PART 1, 1-4B, F1).

"N"= DISTANCE FROM EDGE OF LANE TO FACE OF GUARDRAIL WHERE GUARDRAIL IS PARALLEL TO LANE.

SEE STD. 862.03 FOR STRUCTURE ANCHOR UNITS

GUARDRAIL INSTALLATION AT BRIDGE APPROACHES FOR TWO-LANE, TWO-WAY TRAFFIC

DESIGN SPEED (MPH)	"L" APPROACH LENGTH (FT.)				"L1" TRAILING LENGTH (FT.)			
	DESIGN YEAR ADT		CURRENT YEAR ADT		DESIGN YEAR ADT		CURRENT YEAR ADT	
	OVER 2000	1001-2000	400-1000	UNDER 400	OVER 2000	1001-2000	400-1000	UNDER 400
70	362.5′	362.5′	350.0′	287.5′	187.5′	187.5′	175.0′	75.0′
60	300.0′	287.5	275.0′	225.0′	137.5′	137.5′	100.0′	75.0′
50	212.5′	212.5′	200.0′	162.5′	87.5′	75.0′	75.0′	75.0′
40	175.0′	150.0′	137.5′	112.5′	75.0′	75.0′	75.0′	75.0′
X *	8′	6′	4′	4′	8′	6′	4′	4′

LENGTHS AND OFFSETS FOR PROPOSED GUARDRAIL AT TWO LANE - TWO WAY LOCATIONS

STATE OF NORTH CAROLINA
DEPT. OF TRANSPORTATION
DIVISION OF HIGHWAYS
RALEIGH, N.C.

1-18

ROADWAY STANDARD DRAWING FOR
GUARDRAIL PLACEMENT

SHEET 4 OF 12
862.01

10/03/2017

STATE OF NORTH CAROLINA
DEPT. OF TRANSPORTATION
DIVISION OF HIGHWAYS
RALEIGH, N.C.

1-18

ROADWAY STANDARD DRAWING FOR
GUARDRAIL PLACEMENT

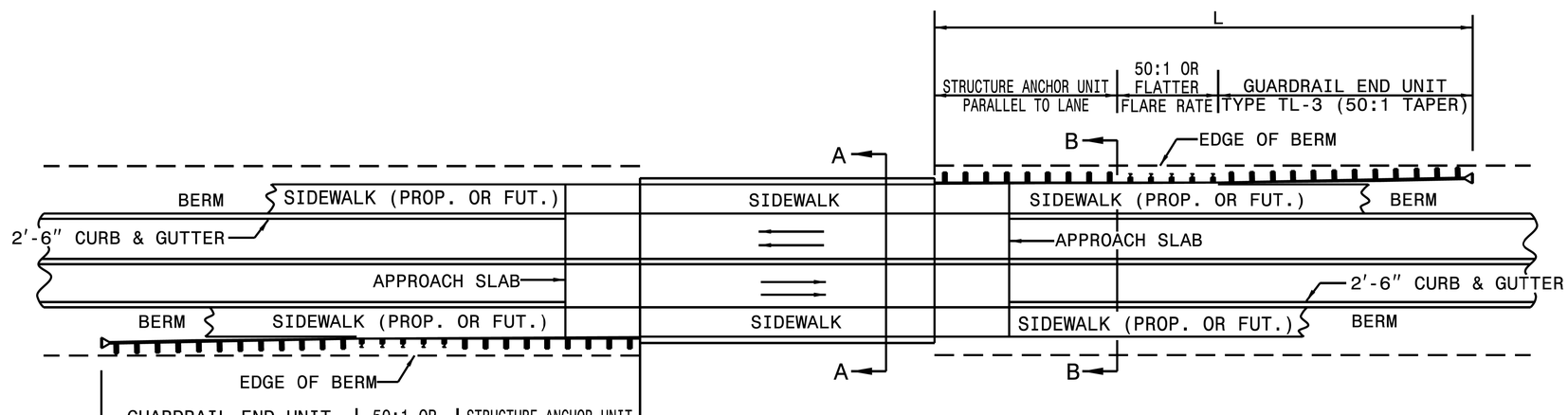

MINIMUM GUARDRAIL LENGTHS "L" REQUIRED AT BRIDGE APPROACHES ON 2'-6" CONCRETE CURB AND GUTTER ROADWAYS	
DESIGN SPEED (MPH)	"L"
40	150'
50	225'

NOTE: "L" VALUES ARE BASED ON NO HAZARDS OTHER THAN END OF BRIDGE BEING PRESENT WITHIN THE CLEAR ZONE.

SEE STD. 862.03 FOR STRUCTURE ANCHOR UNITS.

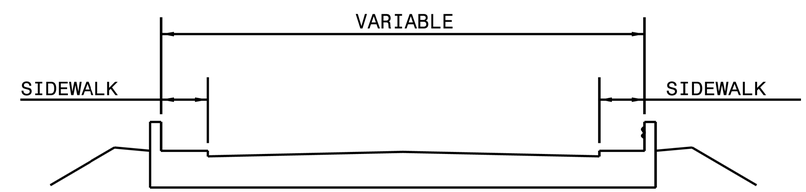

SECTION A-A

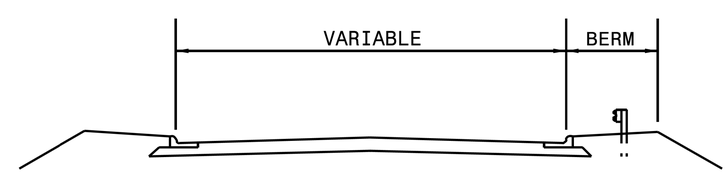

SECTION B-B

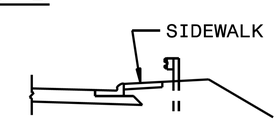

STANDARD GUARDRAIL PLACEMENT AT BRIDGES WITH 2'-6" CONCRETE CURB AND GUTTER

STATE OF NORTH CAROLINA
DEPT. OF TRANSPORTATION
DIVISION OF HIGHWAYS
RALEIGH, N.C.

1-18

ROADWAY STANDARD DRAWING FOR
GUARDRAIL PLACEMENT

SHEET 5 OF 12
862.01

10/03/2017

STATE OF NORTH CAROLINA
DEPT. OF TRANSPORTATION
DIVISION OF HIGHWAYS
RALEIGH, N.C.

1-18

ROADWAY STANDARD DRAWING FOR
GUARDRAIL PLACEMENT

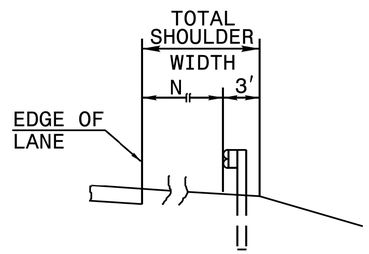

FILL SECTION

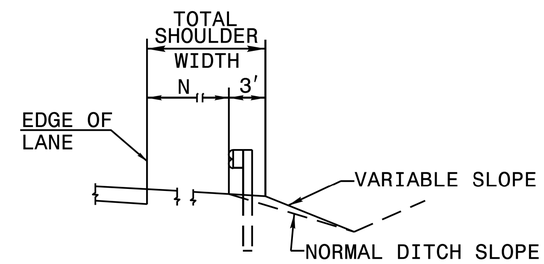

CUT SECTION

"N"= DISTANCE FROM EDGE OF LANE TO FACE OF GUARDRAIL WHERE GUARDRAIL IS PARALLEL TO LANE.

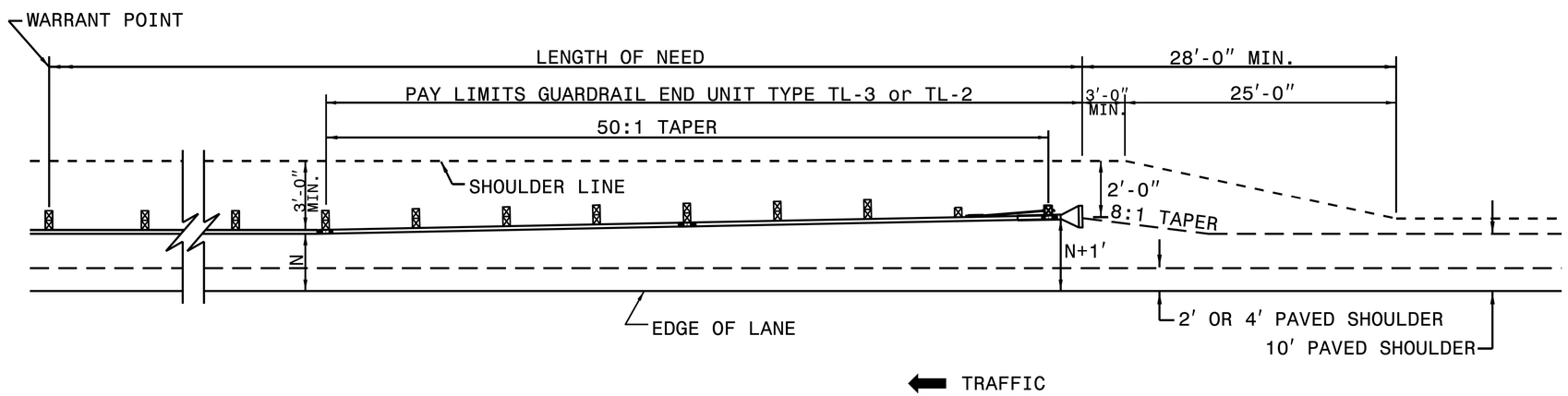

DETAIL OF BEGINNING OF GUARDRAIL IN CUT OR FILL SECTION

SHEET 6 OF 12
862.01

STATE OF NORTH CAROLINA
DEPT. OF TRANSPORTATION
DIVISION OF HIGHWAYS
RALEIGH, N.C.
1-18
ROADWAY STANDARD DRAWING FOR
GUARDRAIL PLACEMENT
SHEET 6 OF 12
862.01

10/03/2017

PROJECT REFERENCE NO.	SHEET NO.
SS-4914CJ	2C-7

STD. DRAWING 862.01

STATE OF NORTH CAROLINA
DEPT. OF TRANSPORTATION
DIVISION OF HIGHWAYS
RALEIGH, N.C.

1-18

ROADWAY STANDARD DRAWING FOR
GUARDRAIL PLACEMENT

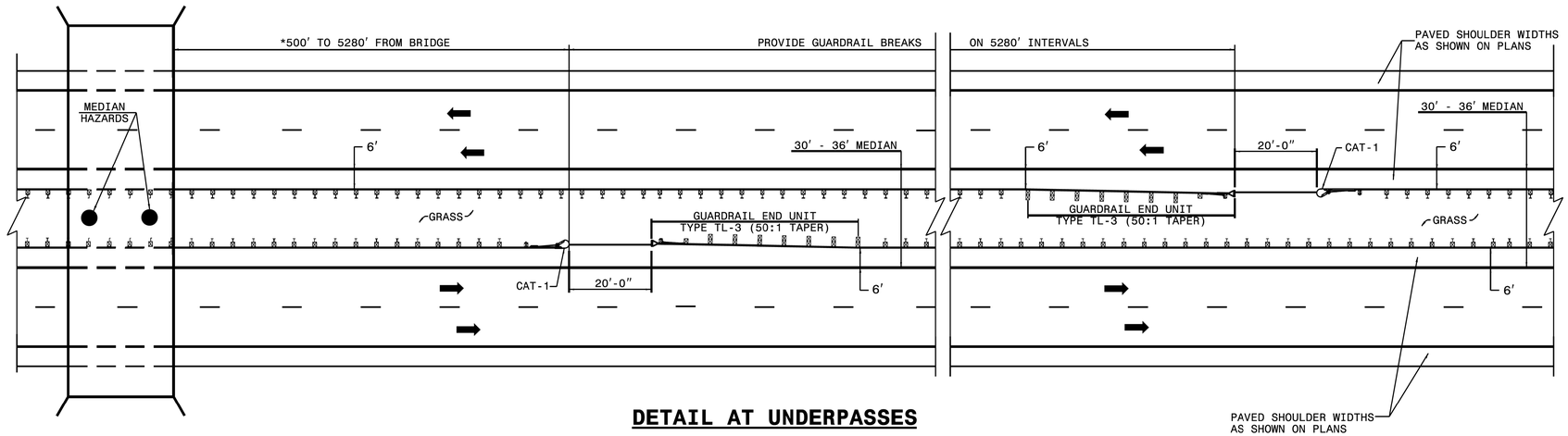

DETAIL AT UNDERPASSES

* GUARDRAIL OPENING MAY BE SPACED AS CLOSE AS 350 FT. FROM STRUCTURE IF NECCESSARY TO ALLOW MOWER ACCESS TO MEDIAN

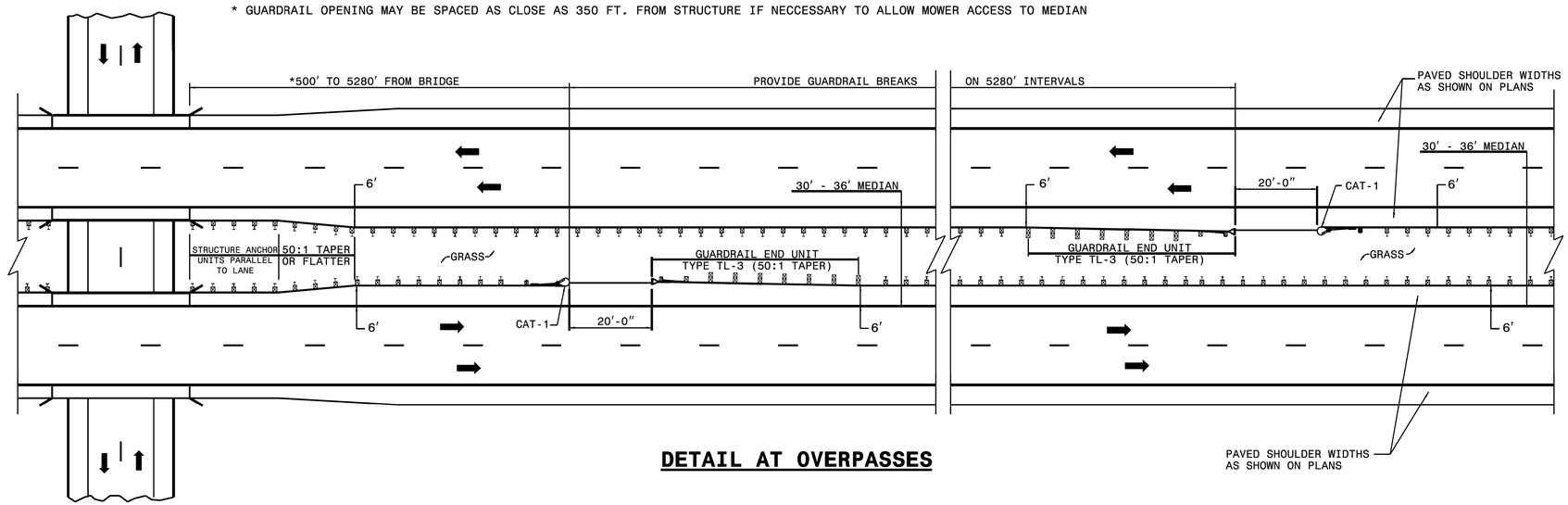

DETAIL AT OVERPASSES

GUARDRAIL BREAK INTERVALS WITH 30' - 36' MEDIANS

STATE OF NORTH CAROLINA
DEPT. OF TRANSPORTATION
DIVISION OF HIGHWAYS
RALEIGH, N.C.

1-18

ROADWAY STANDARD DRAWING FOR
GUARDRAIL PLACEMENT

SHEET 7 OF 12
862.01

SHEET 7 OF 12
862.01

10/03/2017

STATE OF NORTH CAROLINA
DEPT. OF TRANSPORTATION
DIVISION OF HIGHWAYS
RALEIGH, N.C.

1-18

ROADWAY STANDARD DRAWING FOR
GUARDRAIL PLACEMENT

NOTES:

SHOP CURVED GUARDRAIL IS DEFINED AS HAVING A RADIUS OF 150′ OR LESS.

WHEN RADIUS IS LESS THAN 20′ REFER TO SHEET 9.

WHENEVER SHOP CURVED GUARDRAIL IS USED AS AN ANCHOR AND THE RADIUS IS FROM 20′ TO 75′, USE A MINIMUM LENGTH OF 50′ OF SHOP CURVED GUARDRAIL AND FLARE WITH AN AT-1 ANCHOR UNIT. REFER TO DETAIL 1.

WHENEVER SHOP CURVED GUARDRAIL RADIUS IS MORE THAN 75′, REFER TO DETAIL 2.

MAINTAIN CLEAR SIGHT DISTANCE.

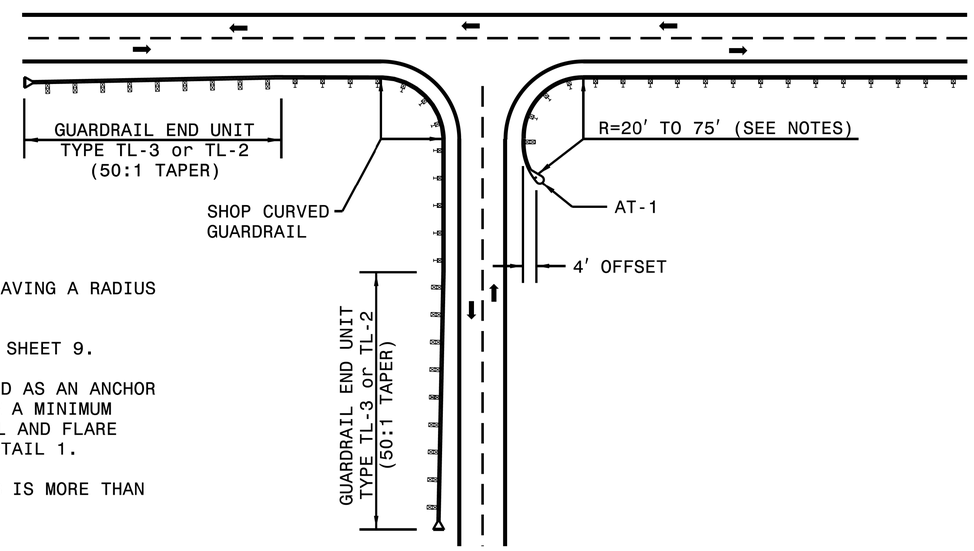

DETAIL-1

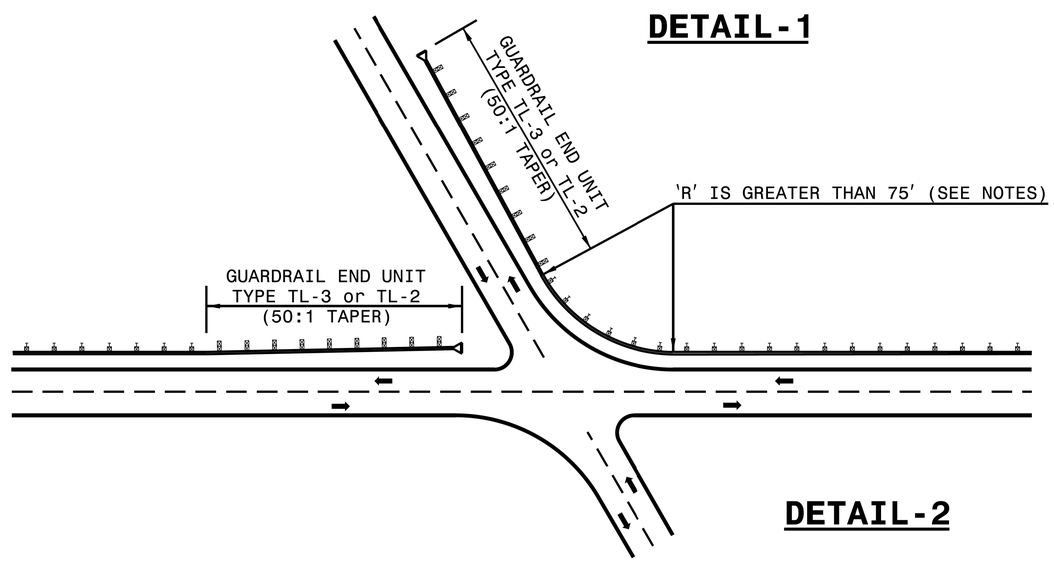

DETAIL-2

GUARDRAIL TREATMENT AT INTERSECTIONS

STATE OF NORTH CAROLINA
DEPT. OF TRANSPORTATION
DIVISION OF HIGHWAYS
RALEIGH, N.C.

1-18

ROADWAY STANDARD DRAWING FOR
GUARDRAIL PLACEMENT

SHEET 8 OF 12
862.01

10/03/2017

STATE OF
NORTH CAROLINA
DEPT. OF TRANSPORTATION
DIVISION OF HIGHWAYS
RALEIGH, N.C.

1-18

ROADWAY STANDARD DRAWING FOR
GUARDRAIL PLACEMENT

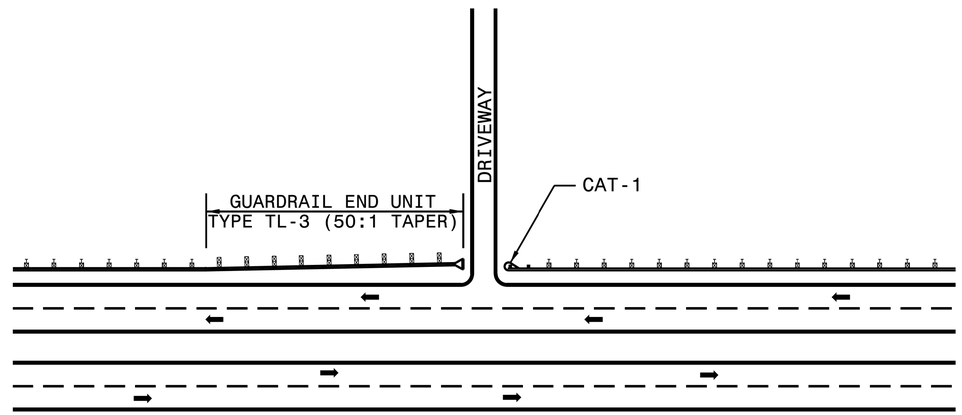

DETAIL-3

DIVIDED HIGHWAY

NOTE: USE DETAIL 3 & 4 WHENEVER 20′ OR LARGER RADIUS CANNOT BE UTILIZED.

MAINTAIN CLEAR SIGHT DISTANCE.

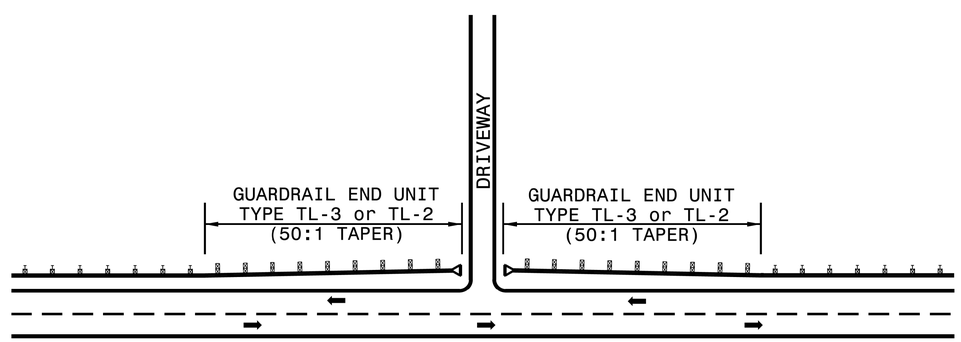

DETAIL-4

UNDIVIDED HIGHWAY

GUARDRAIL TREATMENT AT DRIVEWAYS

STATE OF
NORTH CAROLINA
DEPT. OF TRANSPORTATION
DIVISION OF HIGHWAYS
RALEIGH, N.C.

1-18

ROADWAY STANDARD DRAWING FOR
GUARDRAIL PLACEMENT

SHEET 9 OF 12
862.01

10/03/2017

PROJECT REFERENCE NO.	SHEET NO.
SS-4914CJ	2C-10

STD. DRAWING 862.01

STATE OF NORTH CAROLINA
DEPT. OF TRANSPORTATION
DIVISION OF HIGHWAYS
RALEIGH, N.C.

1-18

ROADWAY STANDARD DRAWING FOR
GUARDRAIL PLACEMENT
25'-0" CLEAR SPAN

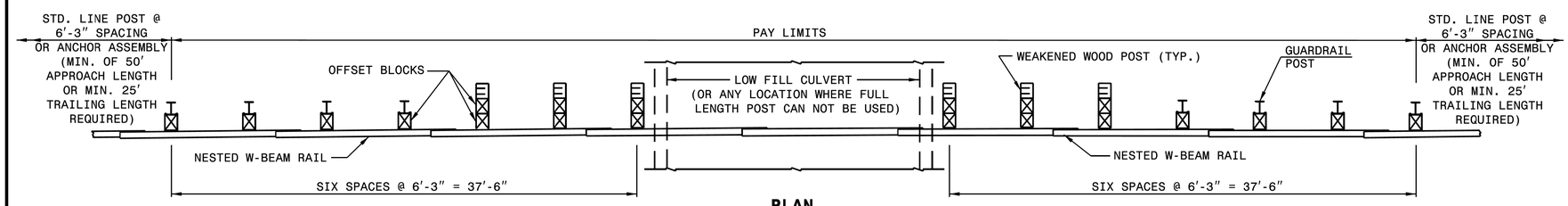

PLAN

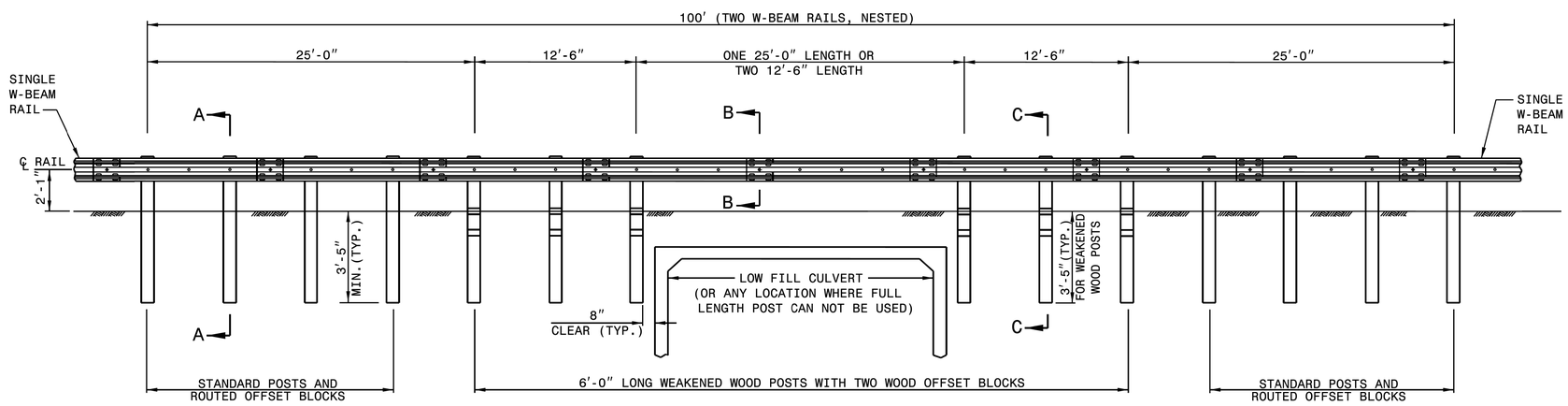

ELEVATION
25'-0" GUARDRAIL SPAN

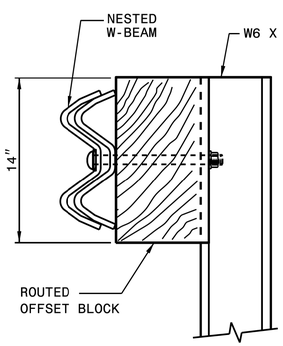

SECTION A-A

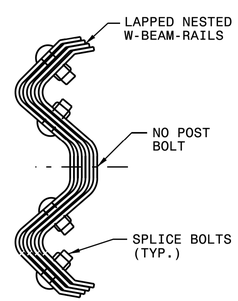

RAIL SPLICE
SECTION B-B

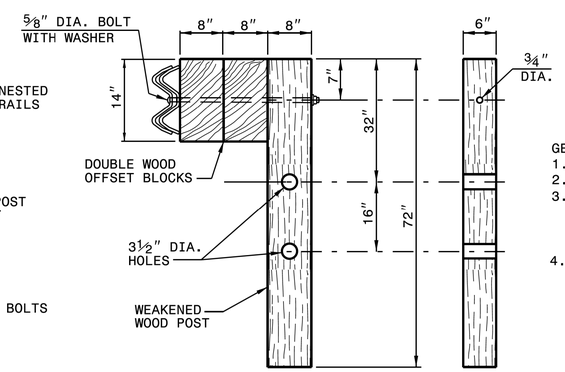

SECTION C-C
WEAKENED WOOD POST

FRONT

GENERAL NOTES:
1. LAP RAIL IN THE DIRECTION OF TRAFFIC FLOW.
2. SEE ROADWAY PLANS FOR LOCATIONS AND CONTINUATION OF RAIL OR END SECTIONS.
3. 25'-0" SPAN: POSTS MAY BE ELIMINATED SUCH THAT A MAXIMUM OF ONE RAIL SPLICE IS LOCATED WITHIN THE UNSUPPORTED LENGTH. A 25'-0" LENGTH OF NESTED W-BEAM RAIL MAY BE USED TO ELIMINATE A SPLICE WITHIN THE 25'-0" CLEAR SPAN.
4. MINIMUM DISTANCE OF 5 FEET BEHIND THE GUARDRAIL SHOULD BE CLEAR OF ANY FIXED-OBJECT HAZARDS THAT COULD SNAG AN IMPACTING VEHICLE.

STATE OF NORTH CAROLINA
DEPT. OF TRANSPORTATION
DIVISION OF HIGHWAYS
RALEIGH, N.C.

1-18

ROADWAY STANDARD DRAWING FOR
GUARDRAIL PLACEMENT
25'-0" CLEAR SPAN

SHEET 10 OF 12
862.01

10/03/2017

STATE OF
NORTH CAROLINA
DEPT. OF TRANSPORTATION
DIVISION OF HIGHWAYS
RALEIGH, N.C.

1-18

ENGLISH STANDARD DRAWING FOR

GUARDRAIL PLACEMENT

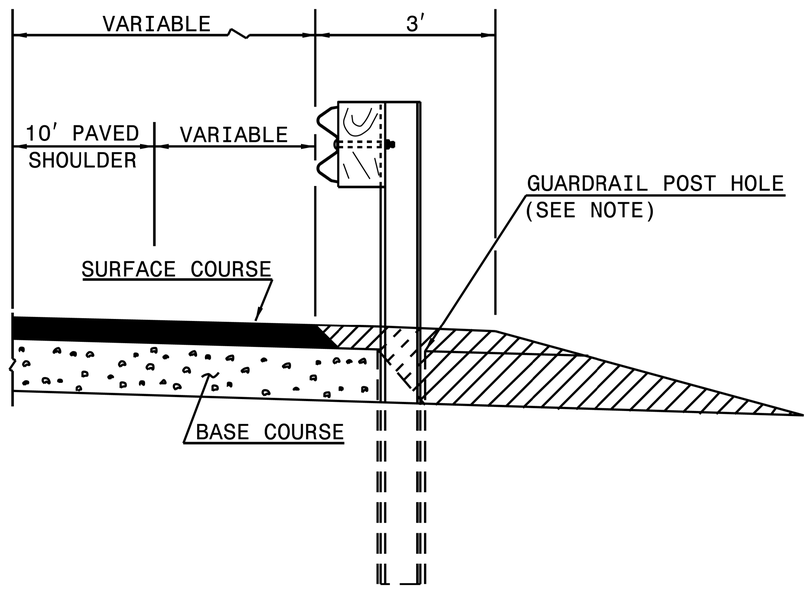

FLEXIBLE PAVED SHOULDER

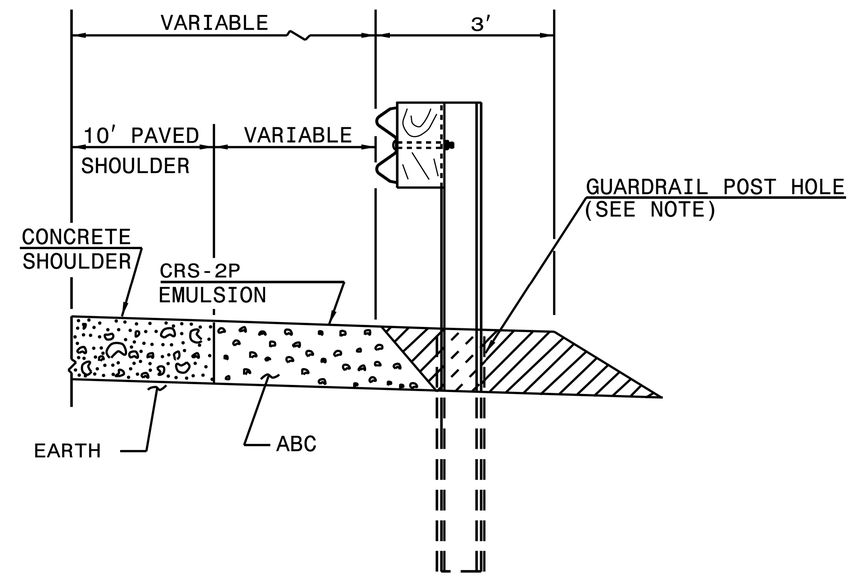

CONCRETE PAVED SHOULDER

EARTH MATERIAL

NOTE:
WHEN WOODEN GUARDRAIL POSTS ARE USED, DRILL HOLES THROUGH EARTH MATERIAL AND BASE COURSE.THE POST MAY THEN BE DRIVEN TO THE PROPER DEPTH. DRILL THE HOLE OF SUFFICIENT SIZE TO ACCOMMODATE THE PARTICULAR POST BEING USED. BACKFILL AND TAMP HOLES USING THE EXCAVATED MATERIAL.

STATE OF
NORTH CAROLINA
DEPT. OF TRANSPORTATION
DIVISION OF HIGHWAYS
RALEIGH, N.C.

1-18

ENGLISH STANDARD DRAWING FOR

GUARDRAIL PLACEMENT

SHEET 11 OF 12
862.01

10/03/2017

PROJECT REFERENCE NO.	SHEET NO.
SS-4914CJ	2C-12

STD. DRAWING 862.01

STATE OF NORTH CAROLINA
DEPT. OF TRANSPORTATION
DIVISION OF HIGHWAYS
RALEIGH, N.C.

1-18

ROADWAY STANDARD DRAWING FOR
GUARDRAIL PLACEMENT
GUARDRAIL TREATMENT AT CURB AND GUTTER

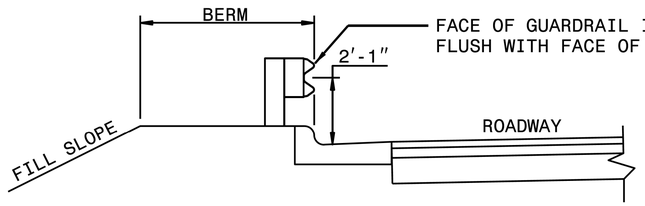

SECTION D-D

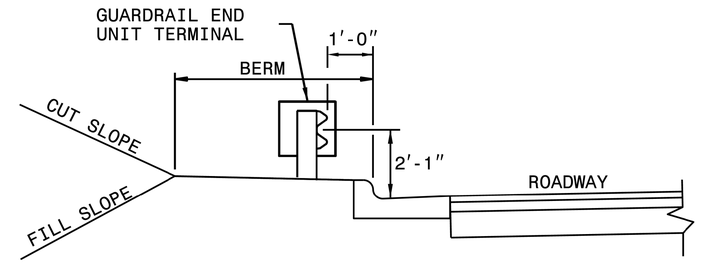

SECTION C-C

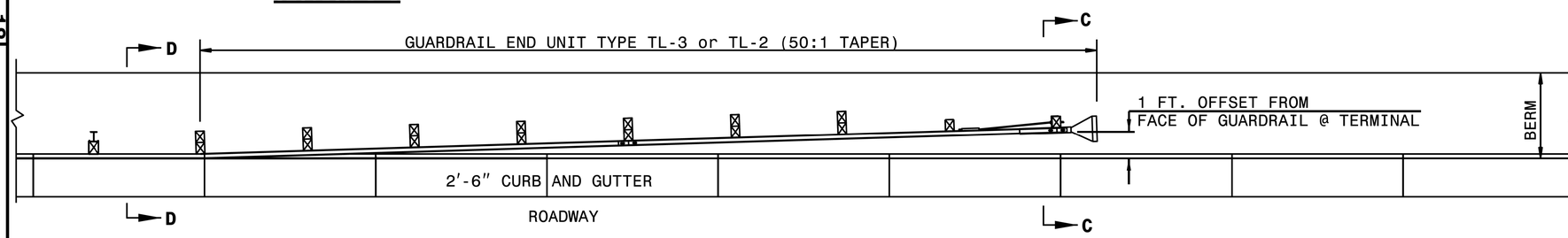

GUARDRAIL AT FACE OF CURB

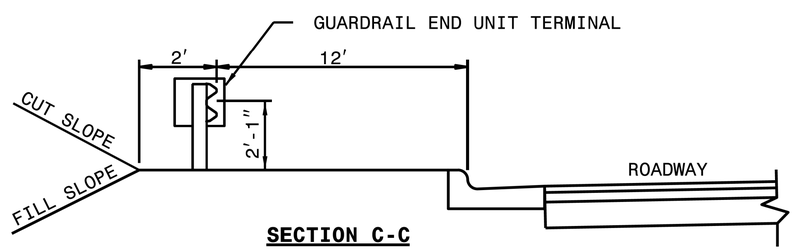

SECTION C-C

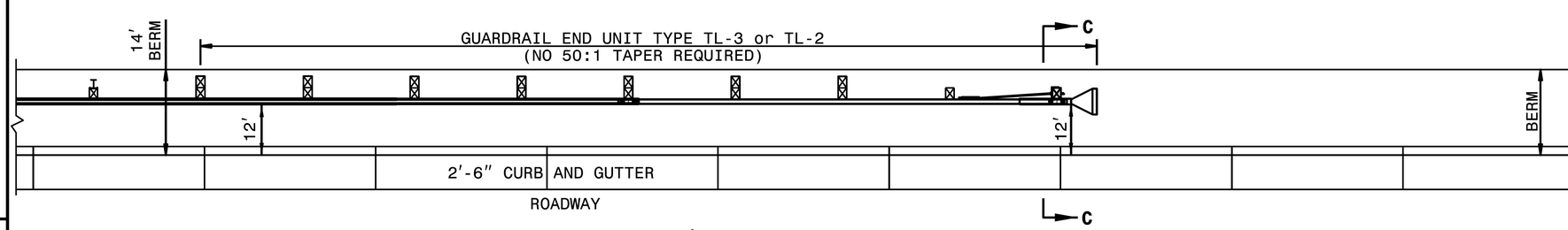

GUARDRAIL 12' OFFSET FROM FACE OF CURB

SHEET 12 OF 12
862.01

STATE OF NORTH CAROLINA
DEPT. OF TRANSPORTATION
DIVISION OF HIGHWAYS
RALEIGH, N.C.

1-18

ROADWAY STANDARD DRAWING FOR
GUARDRAIL PLACEMENT
GUARDRAIL TREATMENT AT CURB AND GUTTER

SHEET 12 OF 12
862.01

10/03/2017

PROJECT REFERENCE NO.	SHEET NO.
SS-4914CJ	2C-13

STD. DRAWING 862.02

STATE OF
NORTH CAROLINA
DEPT. OF TRANSPORTATION
DIVISION OF HIGHWAYS
RALEIGH, N.C.

1-18

ROADWAY STANDARD DRAWING FOR
GUARDRAIL INSTALLATION

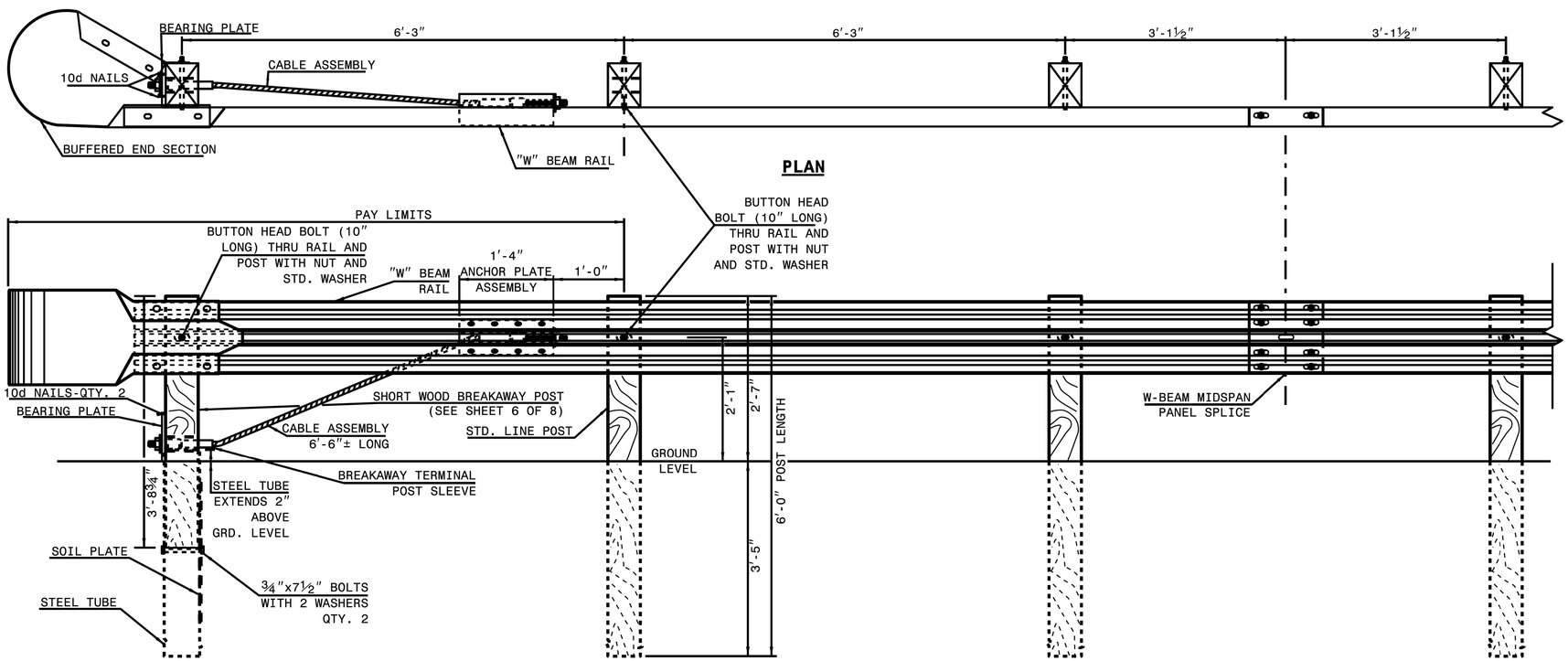

TRAILING END UNIT ASSEMBLY

C.A.T.-1 SYSTEM

SHEET 1 OF 8
862.02

STATE OF
NORTH CAROLINA
DEPT. OF TRANSPORTATION
DIVISION OF HIGHWAYS
RALEIGH, N.C.

1-18

ROADWAY STANDARD DRAWING FOR
GUARDRAIL INSTALLATION

SHEET 1 OF 8
862.02

10/03/2017

STATE OF
NORTH CAROLINA
DEPT. OF TRANSPORTATION
DIVISION OF HIGHWAYS
RALEIGH, N.C.

1-18

ROADWAY STANDARD DRAWING FOR
GUARDRAIL INSTALLATION

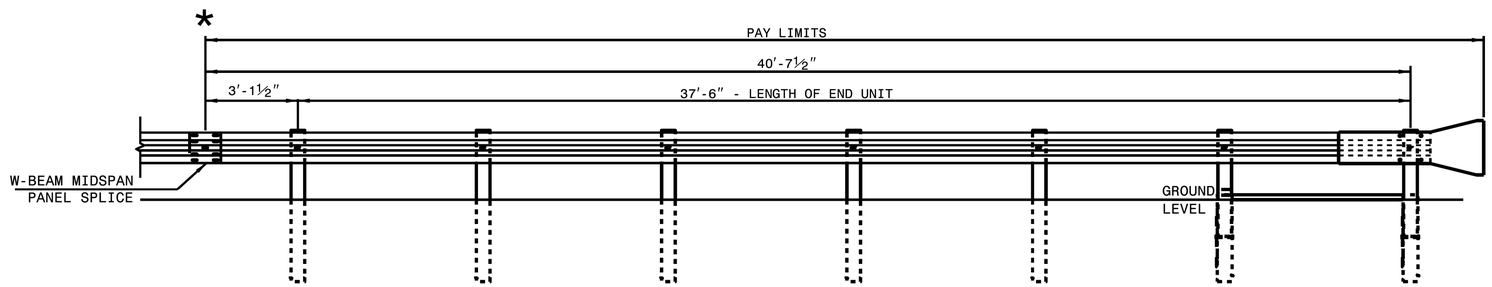

FLARED AND TANGENT
ELEVATION VIEW

*** WHEN INSTALLING GUARDRAIL END UNITS THAT ARE 2'-1" MOUNTING HEIGHT TO EXISTING GUARDRAIL, REMOVE THE EXISTING GUARDRAIL TO TRANSITION FROM THE EXISTING HEIGHT TO THE PROPOSED 2'-1" HEIGHT. SEE 862.02, SHEET 4 OF 8 FOR TRANSITION DETAILS.**

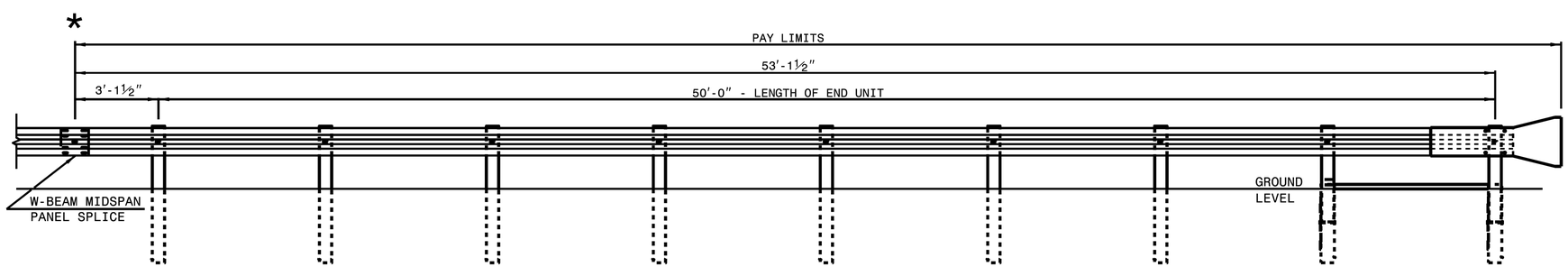

FLARED AND TANGENT
ELEVATION VIEW

APPROACH END UNITS

STATE OF
NORTH CAROLINA
DEPT. OF TRANSPORTATION
DIVISION OF HIGHWAYS
RALEIGH, N.C.

1-18

ROADWAY STANDARD DRAWING FOR
GUARDRAIL INSTALLATION

SHEET 2 OF 8
862.02

10/03/2017

PROJECT REFERENCE NO.	SHEET NO.
SS-4914CJ	2C-15

STD. DRAWING 862.02

STATE OF
NORTH CAROLINA
DEPT. OF TRANSPORTATION
DIVISION OF HIGHWAYS
RALEIGH, N.C.

1-18

ROADWAY STANDARD DRAWING FOR
GUARDRAIL INSTALLATION

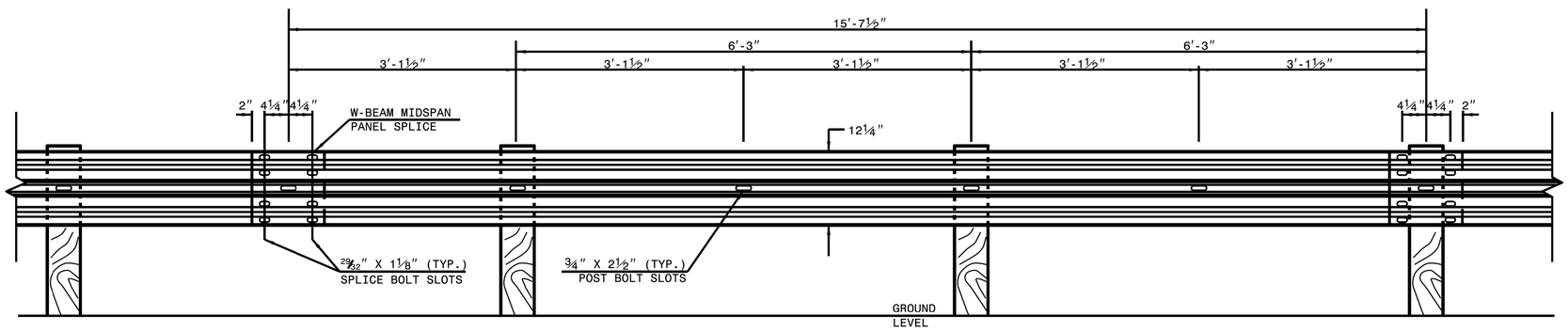

15'-7½" W-BEAM GUARDRAIL PANEL

NOTE: USE 5-SPACE 15'-7½" W-BEAM GUARDRAIL PANEL AT THE DOWNSTREAM END OF AN END UNIT THAT DOES NOT OFFSET THE W-BEAM PANEL SPLICE TO MIDSPAN

SHEET 3 OF 8

862.02

STATE OF
NORTH CAROLINA
DEPT. OF TRANSPORTATION
DIVISION OF HIGHWAYS
RALEIGH, N.C.

1-18

ROADWAY STANDARD DRAWING FOR
GUARDRAIL INSTALLATION

SHEET 3 OF 8

862.02

10/03/2017

STATE OF
NORTH CAROLINA
DEPT. OF TRANSPORTATION
DIVISION OF HIGHWAYS
RALEIGH, N.C.

1-18

ROADWAY STANDARD DRAWING FOR
GUARDRAIL INSTALLATION

NOTE: IF EXISTING GUARDRAIL IS LOWER THAN 1′-11″, USE AN ADDITIONAL 12′-6″ LONG SECTION OF GUARDRAIL, FOR EVERY 1″ OF HEIGHT DIFFERENCE, TO TRANSITION FROM EXISTING GUARDRAIL TO PROPOSED 2′-1″ GUARDRAIL.

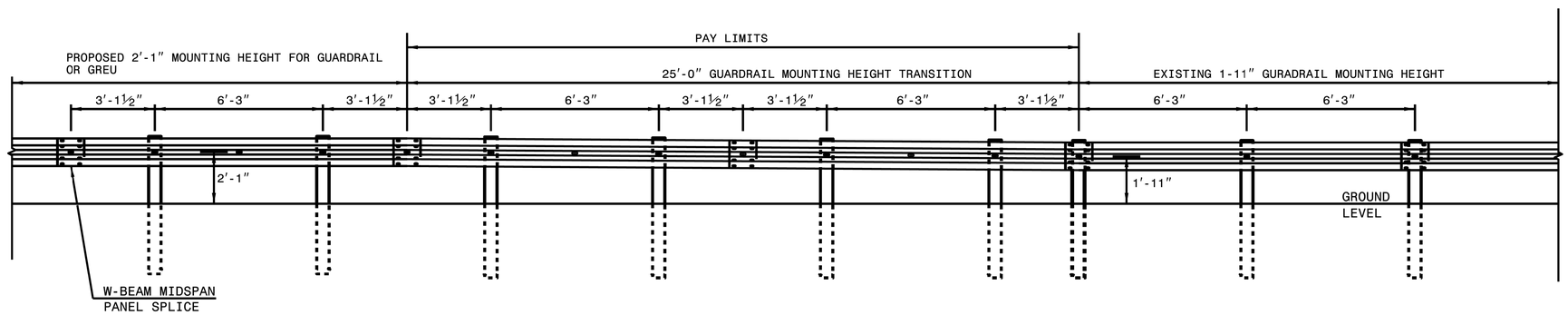

ELEVATION VIEW

TRANSITION FROM OR 1′-11″ TO 2′-1″ W-BEAM GUARDRAIL MOUNTING HEIGHT

STATE OF
NORTH CAROLINA
DEPT. OF TRANSPORTATION
DIVISION OF HIGHWAYS
RALEIGH, N.C.

1-18

ROADWAY STANDARD DRAWING FOR
GUARDRAIL INSTALLATION

SHEET 4 OF 8
862.02

10/03/2017

STATE OF
NORTH CAROLINA
DEPT. OF TRANSPORTATION
DIVISION OF HIGHWAYS
RALEIGH, N.C.

1-18

ROADWAY STANDARD DRAWING FOR
GUARDRAIL INSTALLATION

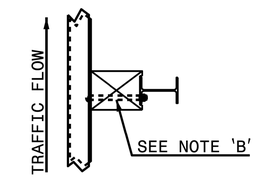

'W6' STEEL POST WITH
ROUTED OFFSET BLOCK

PLAN

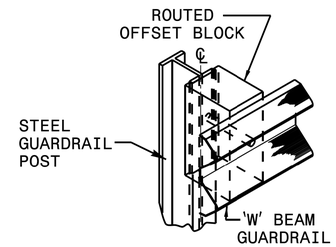

ISOMETRIC VIEW

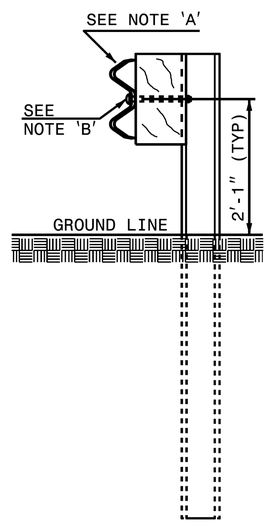

'W6' STEEL POST WITH
ROUTED OFFSET BLOCK

SIDE

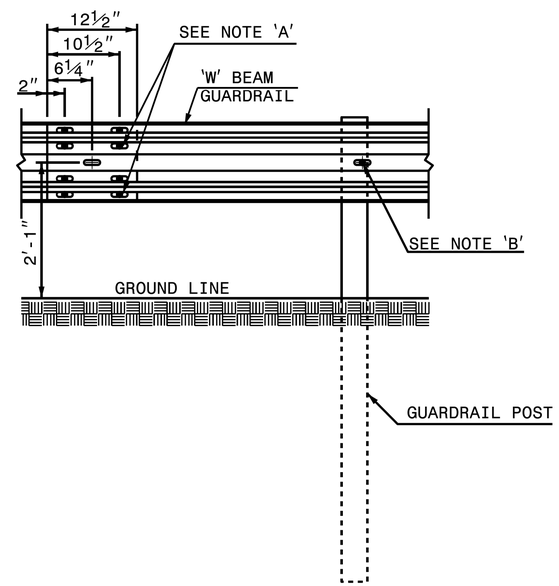

FRONT - MID SPAN SPLICE

NOTES:
A - ⅝" DIA. BUTTON HEAD SPLICE BOLT 1¼" LONG (8 REQ. PER SPLICE JOINT).
B - ⅝" DIA. BUTTON HEAD BOLT 7½"/9" LONG WITH NUT FOR BOLTING 6"/8" ROUTED OFFSET BLOCK TO STEEL POSTS.
C - FIELD PUNCHING OF HOLES INTO GUARDRAIL AS DIRECTED BY THE ENGINEER.

TYPICAL GUARDRAIL AND GUARDRAIL POST ALTERNATIVES

STATE OF
NORTH CAROLINA
DEPT. OF TRANSPORTATION
DIVISION OF HIGHWAYS
RALEIGH, N.C.

1-18

ROADWAY STANDARD DRAWING FOR
GUARDRAIL INSTALLATION

SHEET 5 OF 8
862.02

10/03/2017

PROJECT REFERENCE NO.	SHEET NO.
SS-4914CJ	2C-18

STD. DRAWING 862.02

STATE OF
NORTH CAROLINA
DEPT. OF TRANSPORTATION
DIVISION OF HIGHWAYS
RALEIGH, N.C.

1-18

ROADWAY STANDARD DRAWING FOR
GUARDRAIL INSTALLATION

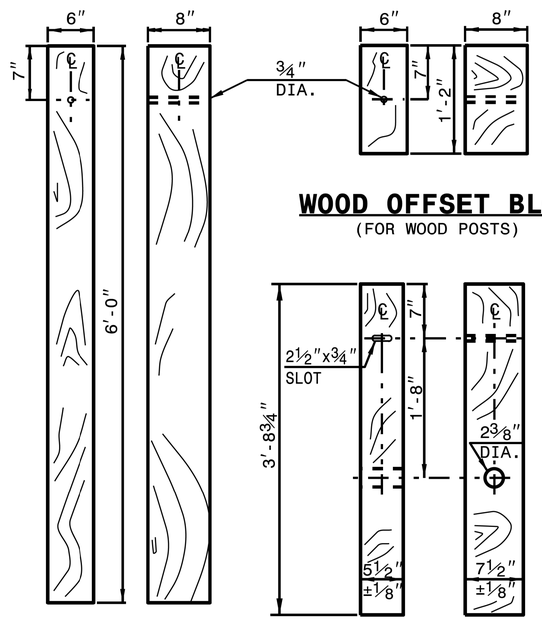

WOOD OFFSET BLOCK
(FOR WOOD POSTS)

STANDARD LINE POST

SHORT WOOD BREAKAWAY POST

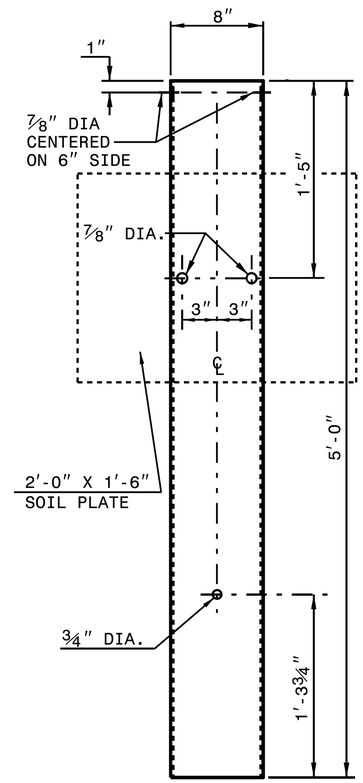

STEEL TUBE
TS 6"x8"x0.1875"

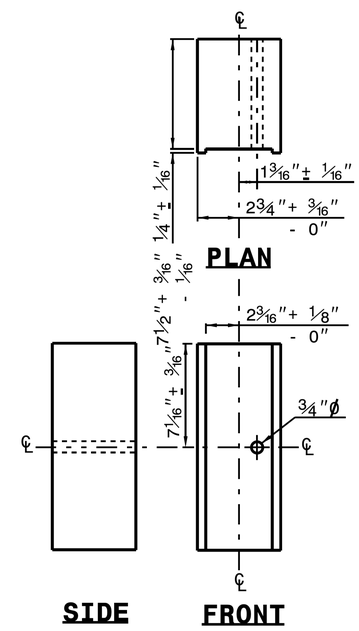

PLAN

SIDE **FRONT**

ROUTED OFFSET BLOCK

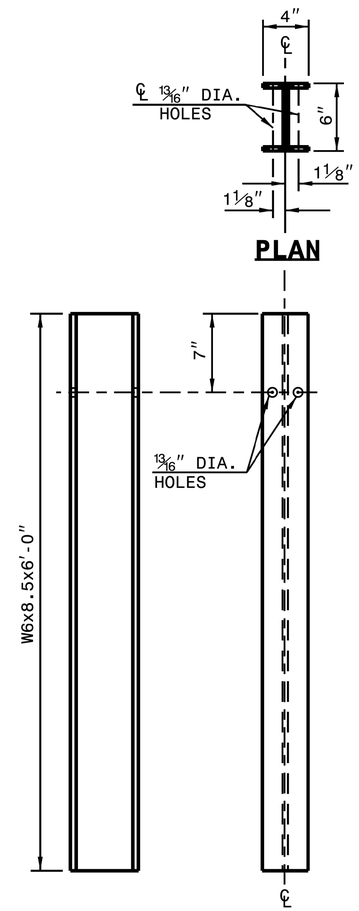

PLAN

SIDE **FRONT**

"W6" STEEL POST

STATE OF
NORTH CAROLINA
DEPT. OF TRANSPORTATION
DIVISION OF HIGHWAYS
RALEIGH, N.C.

1-18

ROADWAY STANDARD DRAWING FOR
GUARDRAIL INSTALLATION

SHEET 6 OF 8
862.02

SYSTEM PARTS

SHEET 6 OF 8
862.02

10/03/2017

STATE OF NORTH CAROLINA
DEPT. OF TRANSPORTATION
DIVISION OF HIGHWAYS
RALEIGH, N.C.

1-18

ROADWAY STANDARD DRAWING FOR
GUARDRAIL INSTALLATION

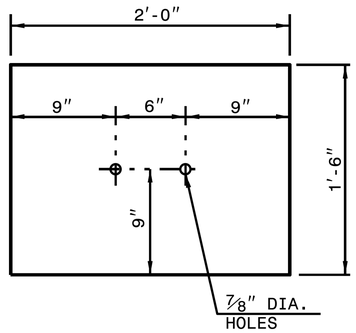

SOIL PLATE

1/4" THICK PLATE

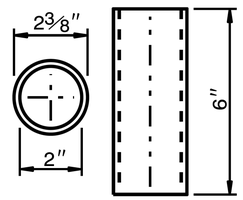

BREAKAWAY TERMINAL POST SLEEVE

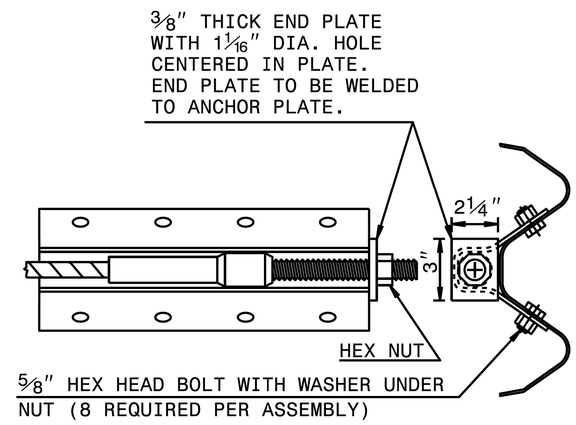

ANCHOR PLATE ASSEMBLY

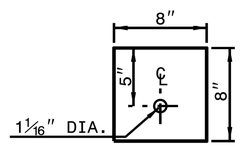

BEARING PLATE

5/8" THICK PLATE

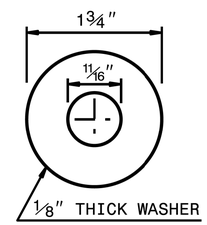

DETAIL OF STANDARD WASHER

STANDARD WASHER: TYPICAL USE UNDER NUT WITH WOOD POST

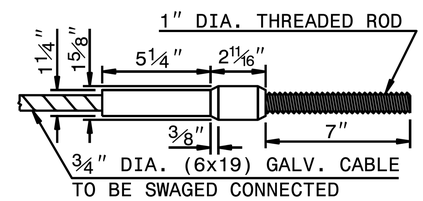

SWAGED CABLE

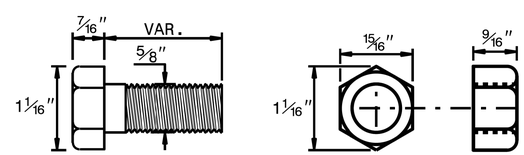

DETAIL OF STANDARD HEX BOLT AND NUT

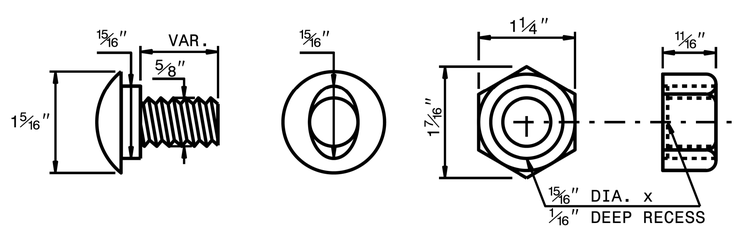

DETAIL OF BUTTON HEAD BOLT AND NUT

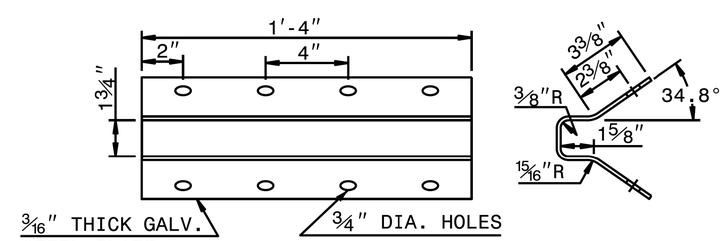

ANCHOR PLATE

CABLE ASSEMBLY

SYSTEM PARTS

STATE OF NORTH CAROLINA
DEPT. OF TRANSPORTATION
DIVISION OF HIGHWAYS
RALEIGH, N.C.

1-18

ROADWAY STANDARD DRAWING FOR
GUARDRAIL INSTALLATION

SHEET 7 OF 8
862.02

10/03/2017

PROJECT REFERENCE NO.	SHEET NO.
SS-4914CJ	2C-20

STD. DRAWING 862.02

STATE OF
NORTH CAROLINA
DEPT. OF TRANSPORTATION
DIVISION OF HIGHWAYS
RALEIGH, N.C.

1-18

ROADWAY STANDARD DRAWING FOR
GUARDRAIL INSTALLATION

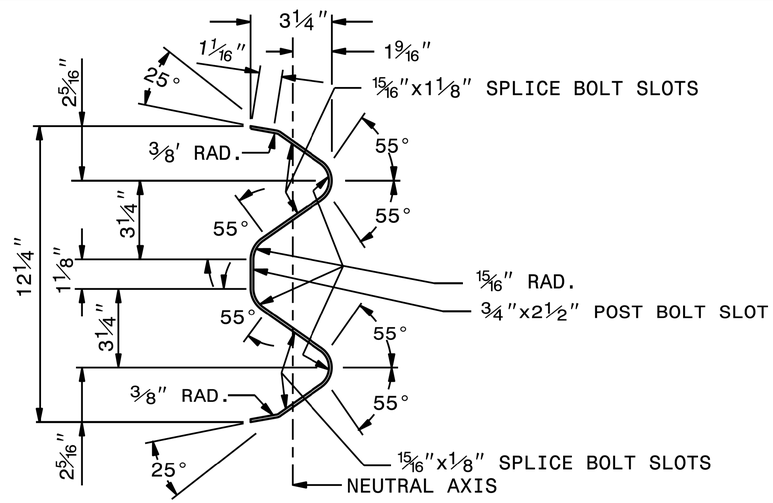

SECTION X-X

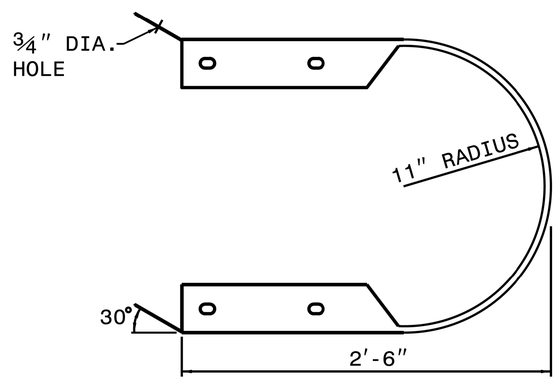

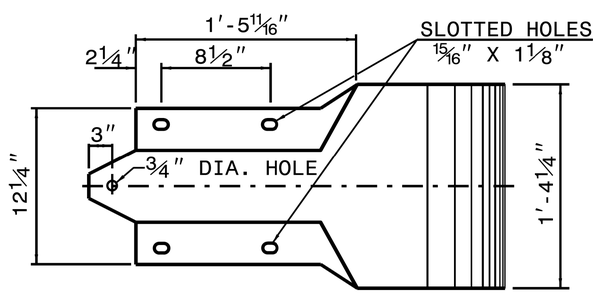

BUFFERED END SECTION

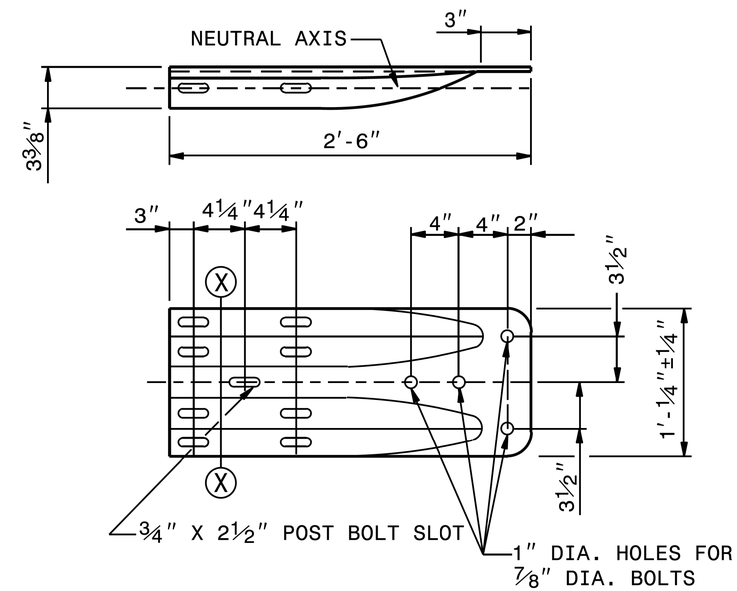

TYPICAL END SHOE

SYSTEM PARTS - GENERAL USE

STATE OF
NORTH CAROLINA
DEPT. OF TRANSPORTATION
DIVISION OF HIGHWAYS
RALEIGH, N.C.

1-18

ROADWAY STANDARD DRAWING FOR
GUARDRAIL INSTALLATION

SHEET 8 OF 8
862.02

SHEET 8 OF 8
862.02

10/03/2017

STATE OF NORTH CAROLINA
DEPT. OF TRANSPORTATION
DIVISION OF HIGHWAYS
RALEIGH, N.C.

1-18

ROADWAY STANDARD DRAWING FOR
STRUCTURE ANCHOR UNITS
GUARDRAIL ANCHOR UNIT, TYPE III
FOR ATTACHMENT TO RAIL ON BRIDGE

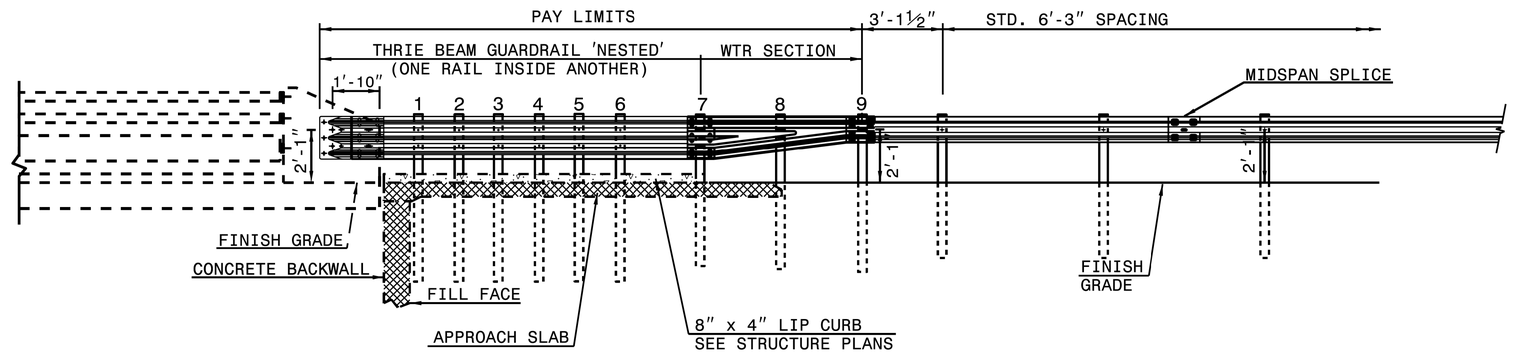

ELEVATION

NOTE:
**POST NOT REQUIRED FOR SKEW ANGLES GREATER THAN 150° OR LESS THAN 30° UNLESS OTHERWISE DIRECTED BY THE ENGINEER.
*THE DISTANCE FROM END OF BRIDGE RAIL TO CENTER LINE OF THE FIRST POST SHOULD BE 11½" IF CONCRETE BACKWALL IS NOT PRESENT.
-SHOULDER BERM GUTTER MUST BE INSTALLED TO THE LIMITS 8" x 4" LIP CURB IS SHOWN IF ANCHOR UNIT IS NOT ADJACENT TO AN APPROACH SLAB.
-MEASURE GUARDRAIL HEIGHT FROM THE TOP OF ADJACENT SURFACE (SHOULDER, BERM, OR GUTTER).
-LAP JOINTS IN THE DIRECTION OF TRAFFIC FLOW.
-SEE SHEET 5 FOR POST SECTIONS 1 THRU 9.

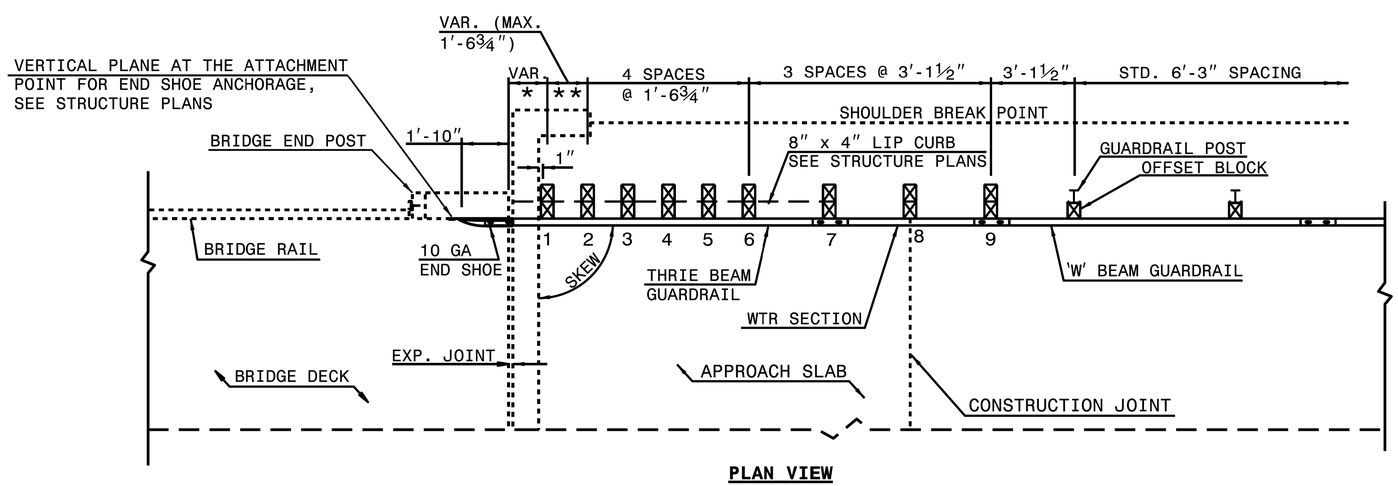

PLAN VIEW

GUARDRAIL ANCHOR UNIT, TYPE III
FOR ATTACHMENT TO RAIL ON BRIDGE

STATE OF NORTH CAROLINA
DEPT. OF TRANSPORTATION
DIVISION OF HIGHWAYS
RALEIGH, N.C.

1-18

ROADWAY STANDARD DRAWING FOR
STRUCTURE ANCHOR UNITS
GUARDRAIL ANCHOR UNIT, TYPE III
FOR ATTACHMENT TO RAIL ON BRIDGE

SHEET 1 OF 7
862.03

10/03/2017

STATE OF NORTH CAROLINA
DEPT. OF TRANSPORTATION
DIVISION OF HIGHWAYS
RALEIGH, N.C.

1-18

ROADWAY STANDARD DRAWING FOR
STRUCTURE ANCHOR UNITS
GUARDRAIL ANCHOR UNIT, TYPE III FOR ATTACHMENT TO RAIL ON BRIDGE - SUB REGIONAL TIER

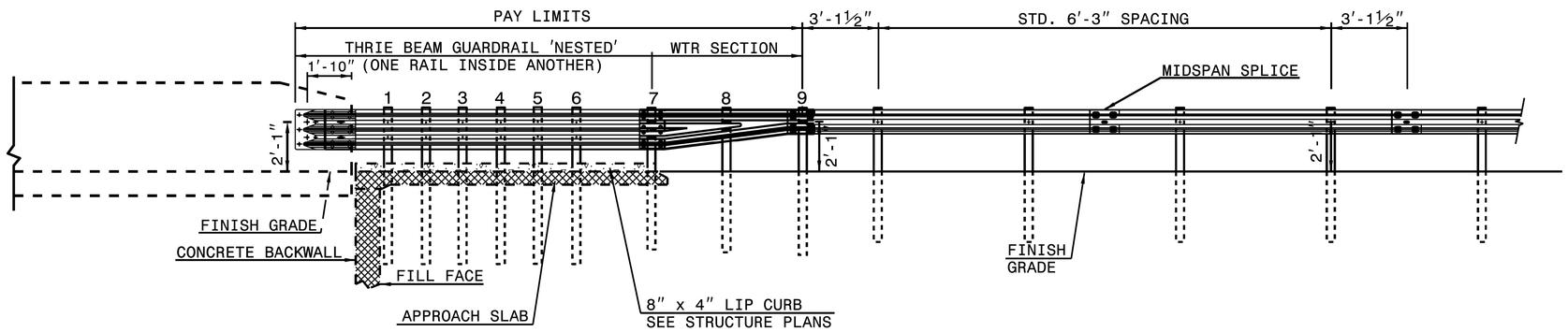

ELEVATION

NOTE:
**POST NOT REQUIRED FOR SKEW ANGLES GREATER THAN 150° OR LESS THAN 30° UNLESS OTHERWISE DIRECTED BY THE ENGINEER.
*THE DISTANCE FROM END OF BRIDGE RAIL TO CENTER LINE OF THE FIRST POST SHOULD BE 11½" IF CONCRETE BACKWALL IS NOT PRESENT.
-SHOULDER BERM GUTTER MUST BE INSTALLED TO THE LIMITS 8" x 4" LIP CURB IS SHOWN IF ANCHOR UNIT IS NOT ADJACENT TO AN APPROACH SLAB.
-MEASURE GUARDRAIL HEIGHT FROM THE TOP OF ADJACENT SURFACE (SHOULDER, BERM, OR GUTTER).
-LAP JOINTS IN THE DIRECTION OF TRAFFIC FLOW.
-SEE SHEET 5 FOR POST SECTIONS 1 THRU 9.

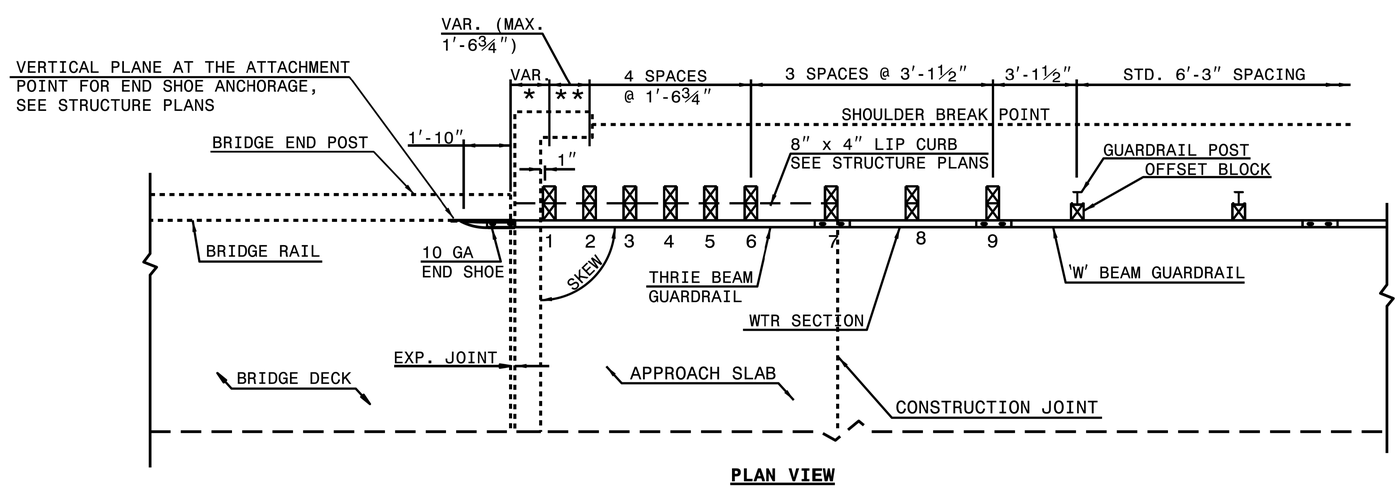

PLAN VIEW

GUARDRAIL ANCHOR UNIT, TYPE III FOR ATTACHMENT TO RAIL ON BRIDGE - SUB REGIONAL TIER

STATE OF NORTH CAROLINA
DEPT. OF TRANSPORTATION
DIVISION OF HIGHWAYS
RALEIGH, N.C.

1-18

ROADWAY STANDARD DRAWING FOR
STRUCTURE ANCHOR UNITS
GUARDRAIL ANCHOR UNIT, TYPE III FOR ATTACHMENT TO RAIL ON BRIDGE - SUB REGIONAL TIER

SHEET 2 OF 7
862.03

10/03/2017

STATE OF
NORTH CAROLINA
DEPT. OF TRANSPORTATION
DIVISION OF HIGHWAYS
RALEIGH, N.C.

1-18

ROADWAY STANDARD DRAWING FOR
STRUCTURE ANCHOR UNITS
GUARDRAIL ANCHOR UNIT, TYPE III

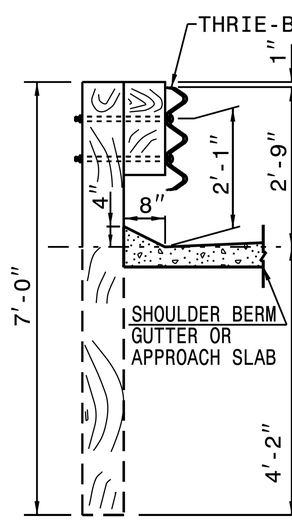

SECTION OF THRIE BEAM POSTS 1 THRU 6

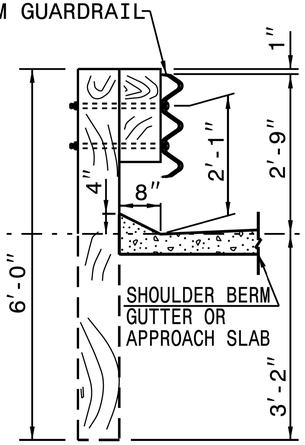

SECTION OF THRIE BEAM POST 7

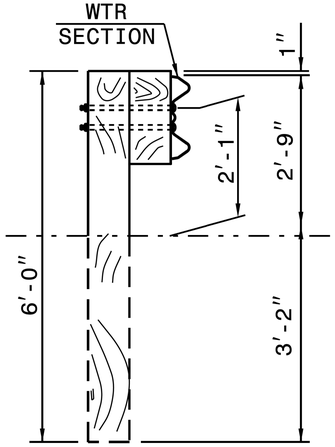

SECTION OF WTR BEAM POST 8

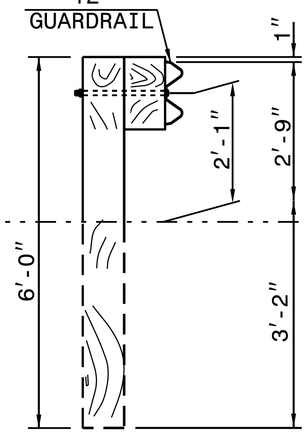

SECTION OF 'W' BEAM POST 9

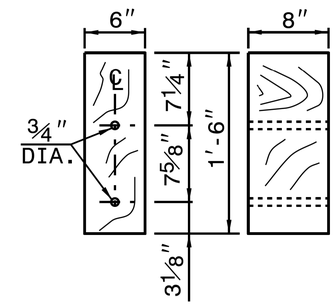

THRIE BEAM OFFSET BLOCK

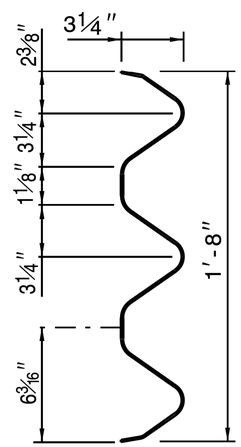

THRIE-BEAM SECTION

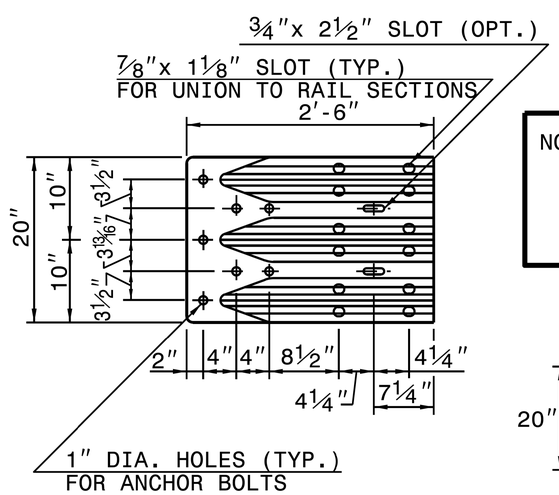

END SHOE

NOTE: THE MID POST AND OFFSET BLOCK OF THE WTR SECTION WILL REQUIRE SPECIAL BOLT HOLE DRILLING IN THE THRIE BEAM OFFSET BLOCK AND LINE POST.

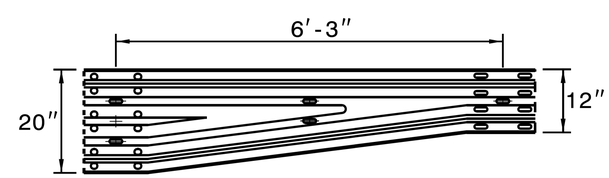

WTR SECTION
ELEVATION VIEW

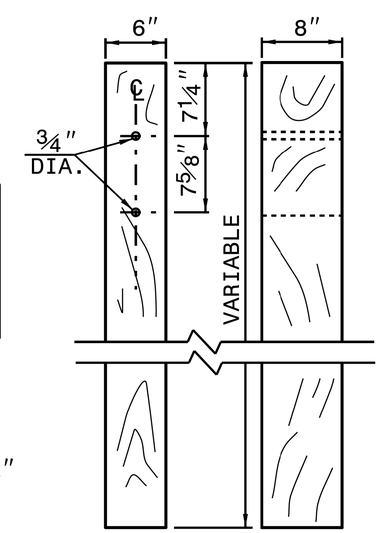

THRIE BEAM LINE POST

STATE OF
NORTH CAROLINA
DEPT. OF TRANSPORTATION
DIVISION OF HIGHWAYS
RALEIGH, N.C.

1-18

ROADWAY STANDARD DRAWING FOR
STRUCTURE ANCHOR UNITS
GUARDRAIL ANCHOR UNIT, TYPE III

SHEET 3 OF 7
862.03

10/03/2017

PROJECT REFERENCE NO.	SHEET NO.
SS-4914CJ	2C-24

STD. DRAWING 862.03

STATE OF NORTH CAROLINA
DEPT. OF TRANSPORTATION
DIVISION OF HIGHWAYS
RALEIGH, N.C.

1-18

ROADWAY STANDARD DRAWING FOR
GUARDRAIL ANCHOR UNIT
GUARDRAIL ANCHOR UNIT TYPE B-77
FOR F-SHAPE BARRIER

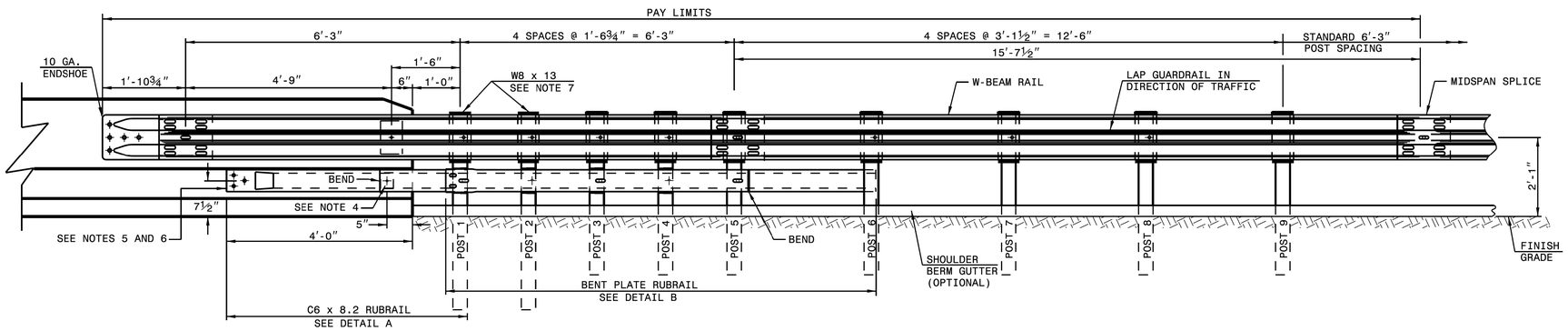

ELEVATION

GENERAL NOTES:
1) POSTS 1 THROUGH 5 REQUIRE AN ADDITIONAL HOLE TO ATTACH LOWER BLOCKOUTS AND/OR RUBRAIL.
2) RUBRAIL BLOCKOUTS LOCATED ON POSTS 1 THROUGH 4 ARE OFFSET DRILLED AND SECURED WITH ⅝" BUTTONHEAD BOLTS (SEE CHART FOR BOLT LENGTHS). SECURE BLOCKS ONLY TO POSTS 2 AND 4. SECURE RUBRAIL AND BLOCKOUTS TO POSTS 1 AND 3. RUBRAIL IS SECURED TO POST 5 WITH A ⅝" x 4½" BUTTONHEAD BOLT. RUBRAIL IS FLARED TO BACK OF POST 6 AND NOT SECURED.
3) STEEL SPACER TUBE IS A SCHEDULE 40 GALVANIZED PIPE 6" INSIDE DIAMETER x 9" LONG. ATTACH TUBE TO GUARDRAIL ONLY WITH ⅝" x 1¼" LONG BUTTONHEAD BOLT AND RECTANGULAR PLATE WASHER.
4) SEE DETAIL D FOR SLOPED RUBRAIL BLOCKOUT. BLOCKOUT IS ATTACHED TO RAIL ELEMENT ONLY. USE ⅜" x 3" LAG BOLT WITH FLAT WASHER.
5) SHOP FABRICATE THE C6 x 8.2 RUBRAIL END TO BE CONSISTENT WITH THE SLOPE OF THE F SHAPE AND ATTACH FLUSH WITH THE SLOPED TOE OF THE BARRIER OR BRIDGE RAIL.
6) ANCHORAGE:
   (a) AT EXISTING BRIDGE RAIL AND NEW OR EXISTING BARRIERS, ANCHOR RUBRAIL USING THREE ⅝" x 6" CHEMICALLY ANCHORED BOLTS WITH WASHERS. MAXIMUM PROJECTION FOR BOLTS IS ½".
   (b) AT EXISTING BRIDGE RAIL AND NEW OR EXISTING BARRIERS, ANCHOR THE W-BEAM END SHOE USING A 4 BOLT HOLD DOWN PLATE (SEE STD. DWG. 862.04). A 4 BOLT INSERT ASSEMBLY IS ALLOWED ON PRECAST REINFORCED CONCRETE BARRIER (SEE STD. DWG. 857.01). INSTALL THE W-BEAM END SHOE BEHIND THE NESTED W-BEAM ELEMENTS.
   (c) AT NEW BRIDGE RAIL, ANCHOR THE W-BEAM END SHOE AND RUBRAIL AS DETAILED ON THE STRUCTURE PLANS.
7) POSTS 1 AND 2 ARE W8 x 13, 7'-6" LONG. ALL OTHER POSTS IN THE ANCHOR UNIT ARE W6 x 8.5.

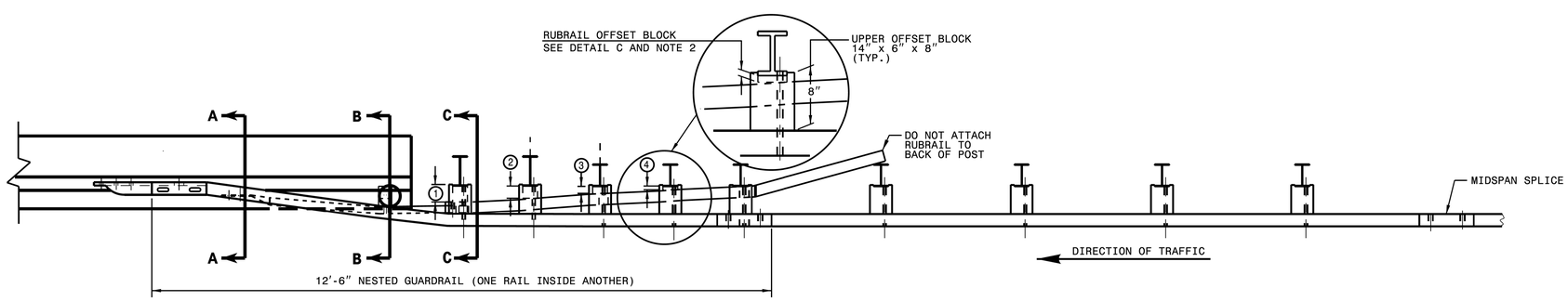

PLAN

GUARDRAIL ANCHOR UNIT TYPE B-77

STATE OF NORTH CAROLINA
DEPT. OF TRANSPORTATION
DIVISION OF HIGHWAYS
RALEIGH, N.C.

1-18

ROADWAY STANDARD DRAWING FOR
STRUCTURE ANCHOR UNIT
GUARDRAIL ANCHOR UNIT TYPE B-77
FOR F-SHAPE BARRIER

SHEET 4 OF 7
862.03

SHEET 4 OF 7
862.03

10/03/2017

PROJECT REFERENCE NO.	SHEET NO.
SS-4914CJ	2C-25

STD. DRAWING 862.03

STATE OF NORTH CAROLINA
DEPT. OF TRANSPORTATION
DIVISION OF HIGHWAYS
RALEIGH, N.C.

1-18

ROADWAY STANDARD DRAWING FOR
STRUCTURE ANCHOR UNIT
GUARDRAIL ANCHOR UNIT TYPE B-77
FOR F-SHAPE BARRIER

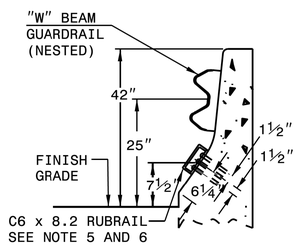

SECTION A-A

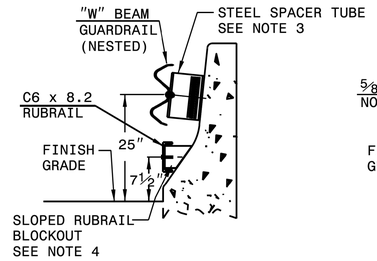

SECTION B-B

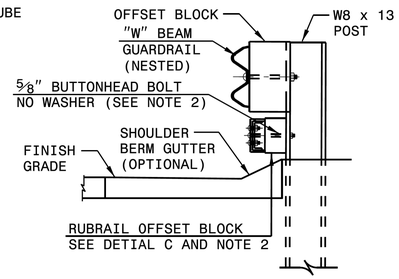

SECTION C-C

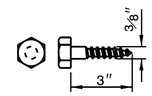

DETAIL E
LAG BOLT

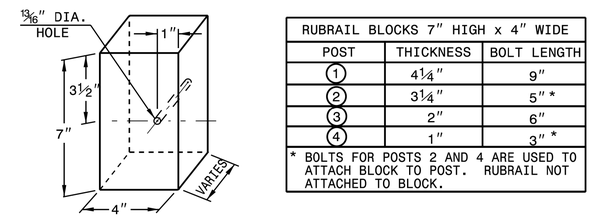

RUBRAIL BLOCKS 7" HIGH x 4" WIDE		
POST	THICKNESS	BOLT LENGTH
1	4¼"	9"
2	3¼"	5" *
3	2"	6"
4	1"	3" *

* BOLTS FOR POSTS 2 AND 4 ARE USED TO ATTACH BLOCK TO POST. RUBRAIL NOT ATTACHED TO BLOCK.

DETAIL C
RUBRAIL BLOCKOUT

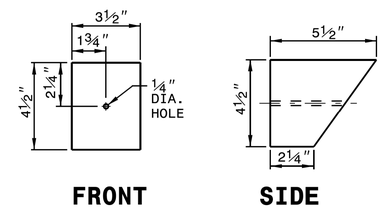

DETAIL D
SLOPED RUBRAIL BLOCKOUT

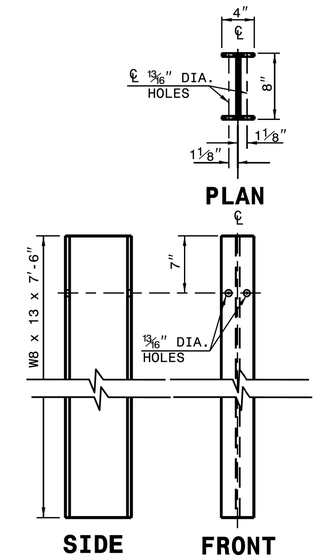

DETAIL F STEEL POST
"W8 X 13 X 7'-6"

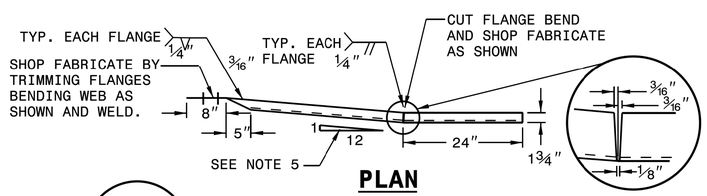

PLAN

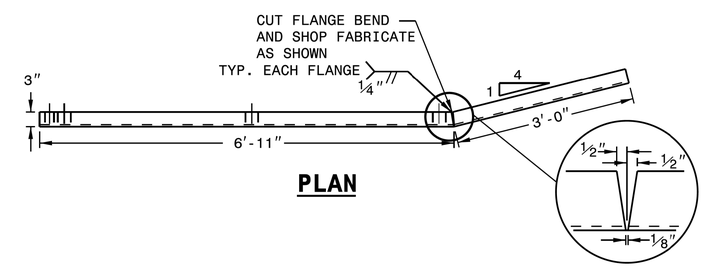

PLAN

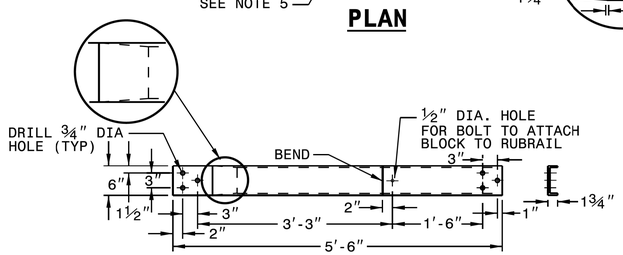

ELEVATION

DETAIL A
C6 x 8.2 RUBRAIL

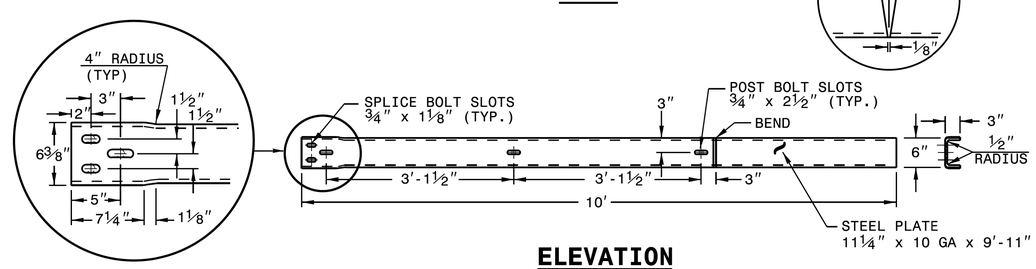

ELEVATION

DETAIL B
BENT PLATE RUBRAIL

GUARDRAIL ANCHOR UNIT TYPE B-77

STATE OF NORTH CAROLINA
DEPT. OF TRANSPORTATION
DIVISION OF HIGHWAYS
RALEIGH, N.C.

1-18

ROADWAY STANDARD DRAWING FOR
STRUCTURE ANCHOR UNIT
GUARDRAIL ANCHOR UNIT TYPE B-77
FOR F-SHAPE BARRIER

SHEET 5 OF 7
862.03

SHEET 5 OF 7
862.03

10/03/2017

PROJECT REFERENCE NO.	SHEET NO.
SS-4914CJ	2C-26

STD. DRAWING 862.03

STATE OF NORTH CAROLINA
DEPT. OF TRANSPORTATION
DIVISION OF HIGHWAYS
RALEIGH, N.C.

1-18

ROADWAY STANDARD DRAWING FOR
STRUCTURE ANCHOR UNITS
GUARDRAIL ANCHOR UNIT TYPE B-83

SECTION A-A

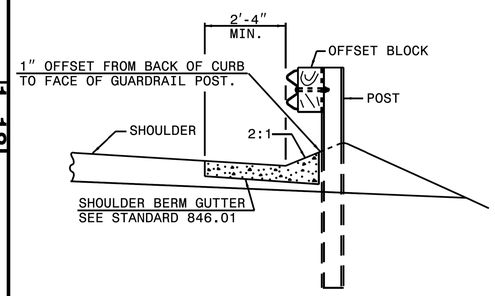

SECTION B-B

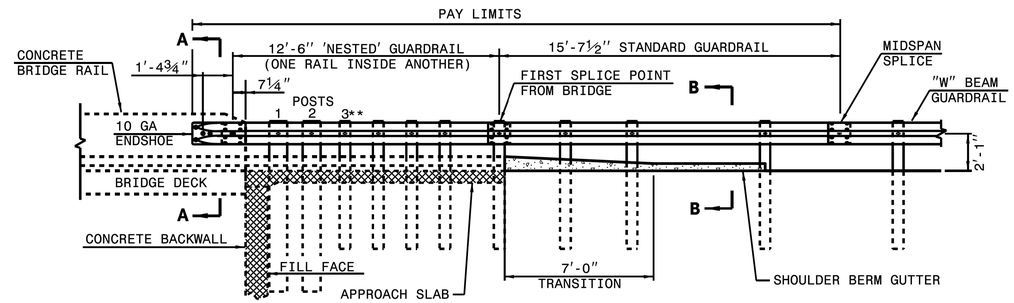

ELEVATION VIEW

NOTE:
**ELIMINATE POST 3 AND SHIFT POSTS 1 & 2 ON SKEW ANGLES GREATER THAN 150° OR LESS THAN 30° UNLESS OTHERWISE DIRECTED BY THE ENGINEER.
*THE DISTANCE FROM END OF BRIDGE RAIL TO CENTER LINE OF THE FIRST POST SHOULD BE 11½" IF CONCRETE BACKWALL IS NOT PRESENT.
-MEASURE GUARDRAIL HEIGHT FROM THE TOP OF ADJACENT SURFACE (SHOULDER, BERM, OR GUTTER).
-USE NO WOOD POSTS WITHIN THE GUARDRAIL ANCHOR UNIT LIMITS.
-LAP JOINTS IN THE DIRECTION OF TRAFFIC FLOW.
-POSTS 1 AND 2 TO BE W8 x 21 X 8'-0" LONG STEEL POST AND 8" X 8" X 14" WOOD ROUTED OFFSET BLOCK.
-SHOULDER BERM GUTTER IS REQUIRED IF NO CURBING EXISTS THROUGH ANCHOR UNIT PAY LIMITS.
-ANCHOR THE W-BEAM END SHOE USING A 4 BOLT HOLD DOWN PLATE AS SHOWN IN STANDARD 862.04

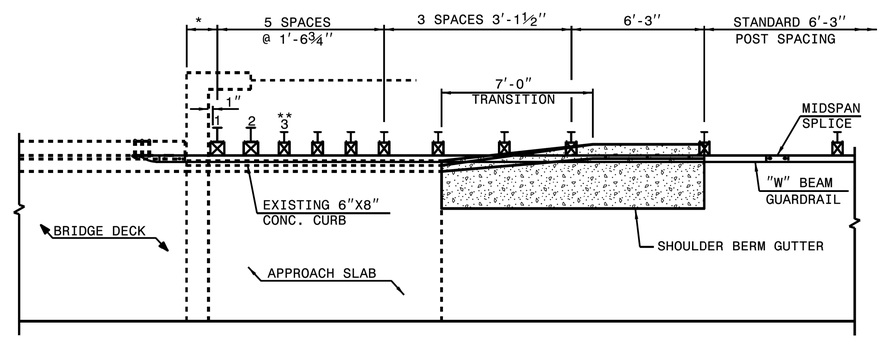

PLAN VIEW

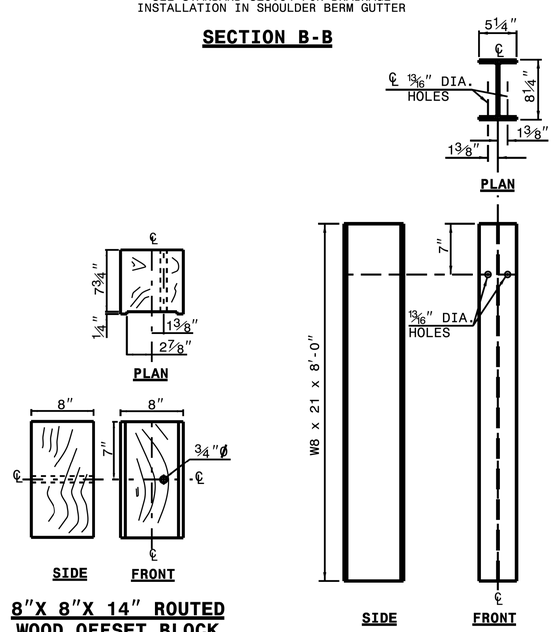

8"X 8"X 14" ROUTED WOOD OFFSET BLOCK

"W8 X 21 X 8'-0" STEEL POST

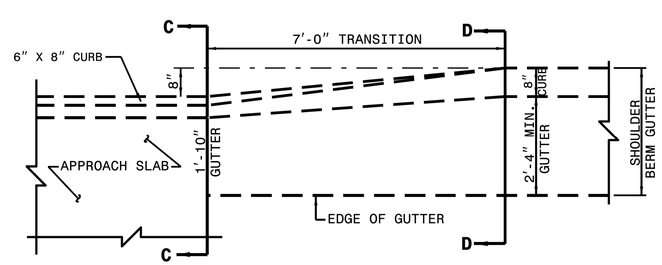

TRANSITION APPROACH SLAB CURB TO SHOULDER BERM GUTTER

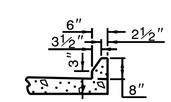

SECTION C-C
APPROACH SLAB CURB

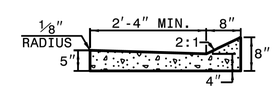

SECTION D-D
SHOULDER BERM GUTTER

GUARDRAIL ANCHOR UNIT TYPE B-83

SHEET 6 OF 7
862.03

STATE OF NORTH CAROLINA
DEPT. OF TRANSPORTATION
DIVISION OF HIGHWAYS
RALEIGH, N.C.
1-18
ROADWAY STANDARD DRAWING FOR
STRUCTURE ANCHOR UNITS
GUARDRAIL ANCHOR UNIT TYPE B-83
SHEET 6 OF 7
862.03

10/03/2017

PROJECT REFERENCE NO.	SHEET NO.
SS-4914CJ	2C-27

STD. DRAWING 862.03

STATE OF NORTH CAROLINA
DEPT. OF TRANSPORTATION
DIVISION OF HIGHWAYS
RALEIGH, N.C.

1-18

ROADWAY STANDARD DRAWING FOR
STRUCTURE ANCHOR UNITS
ANCHORAGE FOR GUARDRAIL POST ON BOX CULVERT

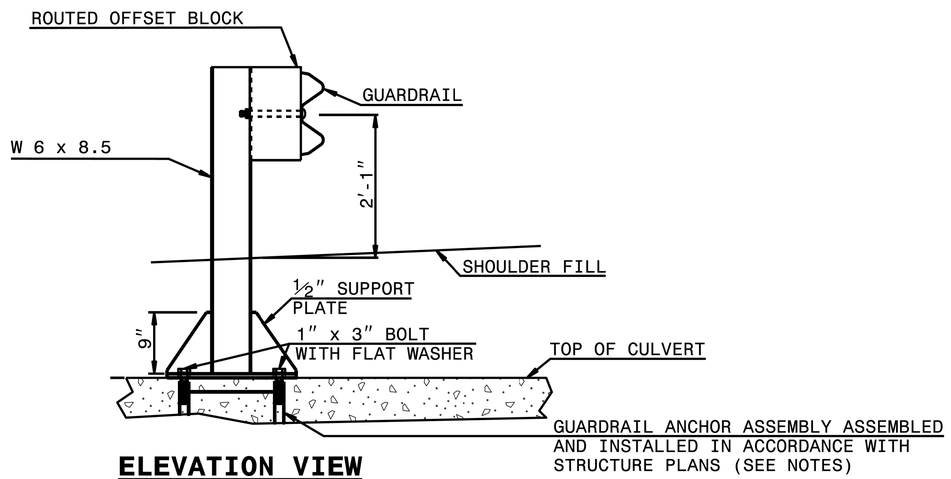

ELEVATION VIEW

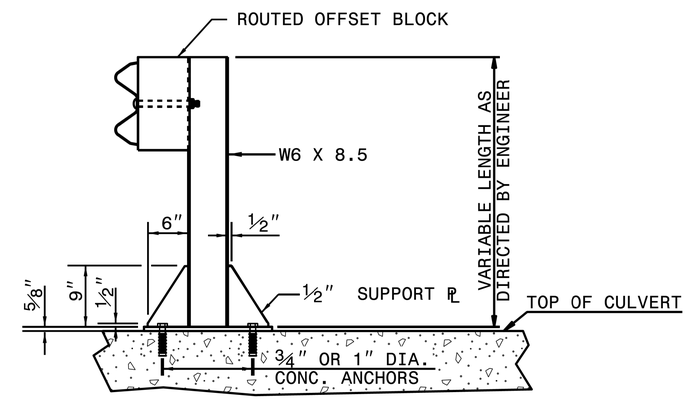

ELEVATION VIEW

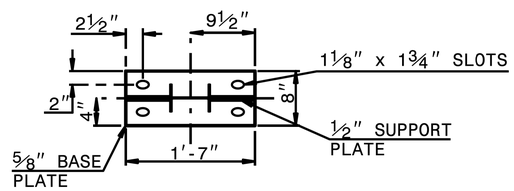

PLAN VIEW

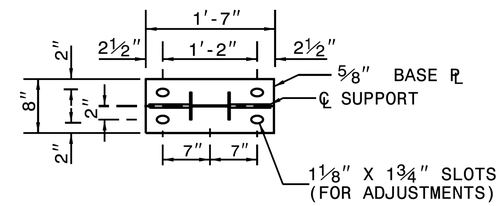

PLAN VIEW

NOTES FOR:
GUARDRAIL POST ANCHORED TO STRUCTURE:
- -USE FULL LENGTH ¼" BUTT WELDS AT ALL LOCATIONS OF CONTACT BETWEEN THE BASE PLATE, SUPPORT PLATES AND STEEL POST.
- -USE POST AND POST BASE PLATES CONFORMING TO THE REQUIREMENTS OF A.S.T.M. A-36 AND GALVANIZED AFTER FABRICATION TO CONFORM TO A.S.T.M. A-123.

NEW STRUCTURES:
- -ATTACH POST TO INSERT ASSEMBLY UNITS (USING ANCHOR BOLTS SUPPLIED WITH INSERTS) WHICH HAVE BEEN CAST INTO THE STRUCTURE DURING CONSTRUCTION.

EXISTING STRUCTURES:
- -USE CONCRETE ANCHORS CONSISTING OF A STUD BOLT WITH NUT AND WASHER. USE STUDS THREADED ON ONE END AND HAVING AN EXPANDED WEDGE ASSEMBLY POSITIONED AROUND A TAPERED AREA AT THE OTHER END. USE ANCHORS WHICH PROVIDE A MINIMUM SAFE HOLDING POWER OF 2875 LBS. FOR A ¾" OR 1" DIAMETER BOLT. CALCULATE HOLDING POWER BASED ON ¼ THE ACTUAL HOLDING POWER OF THE ANCHOR IN 3500 PSI CONCRETE AS DETERMINED BY AN APPROVED COMMERCIAL TESTING LABORATORY.

- -USE ANCHORS GALVANIZED IN ACCORDANCE WITH A.S.T.M. A-153. SIZE HOLES FOR THE CONCRETE ANCHORS IN ACCORDANCE WITH THE ANCHOR MANUFACTURER'S RECOMMENDATIONS. DRILL HOLES WITH A CARBIDE OR DIAMOND TIPPED MASONRY BIT POWERED BY A ROTARY OR ROTARY IMPACT DRILL. NO OTHER IMPACT TOOLS WILL BE PERMITTED. DRILL HOLES VERTICALLY. FURNISH DOCUMENTATION OF HOLE SIZE RECOMMENDED FOR THE SPECIFIED ANCHOR TO THE ENGINEER BEFORE DRILLING HOLES. THOROUGHLY CLEAN HOLES FOR ANCHORS OF ALL CONCRETE CHIPS, DUST, GREASE, OIL, ETC. BEFORE ANCHORS ARE INSTALLED. REPAIR ALL DAMAGE CAUSED BY THIS WORK TO THE SATISFACTION OF THE ENGINEER.

ANCHORAGE FOR GUARDRAIL POST ON BOX CULVERT

STATE OF NORTH CAROLINA
DEPT. OF TRANSPORTATION
DIVISION OF HIGHWAYS
RALEIGH, N.C.

1-18

ROADWAY STANDARD DRAWING FOR
STRUCTURE ANCHOR UNITS
ANCHORAGE FOR GUARDRAIL POST ON BOX CULVERT

SHEET 7 OF 7
862.03

SHEET 7 OF 7
862.03

10/03/2017

COMPUTED BY: BGS DATE: 10/03/2017
CHECKED BY: RCC DATE: 10/03/2017

STATE OF NORTH CAROLINA
DIVISION OF HIGHWAYS

PROJECT REFERENCE NO.	SHEET NO.
SS-4914CJ	3B-1

CRAB CREEK ROAD – GUARDRAIL SUMMARY

SITE NO.	BEG. STA.	END STA.	LOCATION	LENGTH				WARRANT POINT		"N" DIST. FROM E.O.L.	TOTAL SHOULDER WIDTH	FLARE LENGTH		W		ANCHORS								IMPACT ATTENUATOR TYPE 350	REMOVE EXISTING GUARDRAIL	REMARKS
				NUGUARD STRAIGHT	NUGUARD SHOP CURVED	STRAIGHT	SHOP CURVED	APPROACH END	TRAILING END			APPROACH END	TRAILING END	APPROACH END	TRAILING END	GREU TL-3 END UNIT	GREU C.A.T.-1 END UNIT	GREU B-77 END UNIT	GRAU 350 END UNIT	AT-1 END UNIT	B-77 END UNIT	PERMITTED NO.	PERMITTED G	PERMITTED NG			
S1	0+10	4+89	RT			425.0	25.0									1	1										
S2	16+00	18+00	RT			100.0										2											
S3	27+93	38+40	RT			950.0										2											
S3B	47+31	48+56	RT			125.0										2											POSSIBLE GUARDRAIL SPAN OR ANCHOR POSTS TO BOX CULVERT
S4	54+31	55+80	RT			50.0										2											
S5	63+85	64+56	RT			37.5	50.0										2										
S6	74+75	79+99	RT			425.0										2											
S7	94+10	97+66	RT			287.5	25.0									1	1										
S8	114+58	117+00	RT			175.0	25.0									1	1										
S9	166+37	167+50	RT			12.5										2											
S10	167+90	172+18	RT			350.0	25.0									1	1										
S11	178+20	181+68	RT			250.0										2											
S11B	187+82	190+07	RT			125.0										2											
S12	191+22	194+58	RT			237.5										2											
S12B	203+14	204+77	RT			62.5										2											
S13	220+58	221+70	RT			50.0	25.0									1	1										
S14	242+20	248+17	RT			500.0										2											
S15	249+96	250+87	RT			37.5	25.0									2											
S16	274+85	277+05	RT			125.0										2											
S17	287+90	289+40	RT			50.0										2											
S18	300+51	303+02	RT			150.0										2											
S19	311+49	312+61	RT			12.5										2											
PAGE TOTALS						4537.5	200.0									37	7										

10/03/2017

COMPUTED BY: BGS DATE: 10/03/2017
CHECKED BY: RCC DATE: 10/03/2017

STATE OF NORTH CAROLINA
DIVISION OF HIGHWAYS

PROJECT REFERENCE NO.	SHEET NO.
SS-4914CJ	3B-2

CRAB CREEK ROAD – GUARDRAIL SUMMARY

SITE NO.	BEG. STA.	END STA.	LOCATION	LENGTH				WARRANT POINT		"N" DIST. FROM E.O.L.	TOTAL SHOULDER WIDTH	FLARE LENGTH		W		ANCHORS									IMPACT ATTENUATOR TYPE 350	REMOVE EXISTING GUARDRAIL	REMARKS
				NUGUARD STRAIGHT	NUGUARD SHOP CURVED	STRAIGHT	SHOP CURVED	APPROACH END	TRAILING END			APPROACH END	TRAILING END	APPROACH END	TRAILING END	GREU TL-3 END UNIT	GREU C.A.T.-1 END UNIT	GREU B-77 END UNIT	GRAU 350 END UNIT	AT-1 END UNIT	B-77 END UNIT	PERMITTED NO.	PERMITTED G	PERMITTED NG			
S19B	327+12	329+40	RT			125.0										2											
S20	341+58	344+33	RT			175.0										2											
S21	346+60	347+87	RT			62.5	25.0									1	1										
S22	366+00	370+16	RT			325.0										2										275.0	
S23	375+85	377+10	RT			25.0										2											
S24	376+35	377+15	LT			12.5	25.0									1	1										
S25	358+00	360+00	LT			100.0										2											
S26	341+75	343+25	LT			50.0										2											
S26B	327+12	329+15	LT			100.0										2											
S27	300+99	303+49	LT			150.0										2											
S28	287+42	288+65	LT			50.0	25.0									1	1										
S29	250+10	251+06	LT			25.0	25.0									1	1										
S30	231+23	232+40	LT			25.0										2											
S31	212+00	213+12	LT			12.5										2											
S32	203+72	204+85	LT			12.5										2											
S33	184+58	186+20	LT			150.0	25.0									1	1										
S34	166+19	167+25	LT			37.5	25.0									1	1										
S35	117+17	117+90	LT			12.5	12.5									1	1										POSSIBLE ANCHOR POSTS TO BOX CULVERT
S36	93+64	94+45	LT			12.5	25.0									1	1										POSSIBLE ANCHOR POSTS TO BOX CULVERT
S37	80+35	82+23	LT			87.5										2											
S38	70+75	72+50	LT			75.0										2											
S39	63+74	64+56	LT			12.5	25.0									1	1										
PAGE TOTALS						1367.5	212.5									35	9									275.0	

10/03/2017

COMPUTED BY: BGS DATE: 10/03/2017
CHECKED BY: RCC DATE: 10/03/2017

STATE OF NORTH CAROLINA
DIVISION OF HIGHWAYS

PROJECT REFERENCE NO.	SHEET NO.
SS-4914CJ	3B-3

CRAB CREEK ROAD – GUARDRAIL SUMMARY

SITE NO.	BEG. STA.	END STA.	LOCATION	LENGTH				WARRANT POINT		"N" DIST. FROM E.O.L.	TOTAL SHOULDER WIDTH	FLARE LENGTH		W		ANCHORS								IMPACT ATTENUATOR TYPE 350	REMOVE EXISTING GUARDRAIL	REMARKS
				NUGUARD STRAIGHT	NUGUARD SHOP CURVED	STRAIGHT	SHOP CURVED	APPROACH END	TRAILING END			APPROACH END	TRAILING END	APPROACH END	TRAILING END	GREU TL-3 END UNIT	GREU C.A.T.-1 END UNIT	GREU B-77 END UNIT	GRAU 350 END UNIT	AT-1 END UNIT	B-77 END UNIT	PERMITTED NO.	PERMITTED G	PERMITTED NG			
S40	47+02	49+31	LT			150.0	25.0									1	1									
S41	38+90	39+86	LT			25.0	25.0									1	1									
S42	16+30	18+55	LT			125.0										2										
PAGE TOTALS						300.0	50.0									4	2									
PROJECT TOTAL						6475.0	462.5									76	18								275.0	

10/03/2017