This electronic collection of documents is provided for the convenience of the user and is Not a Certified Document –

The documents contained herein were originally issued and sealed by the individuals whose names and license numbers appear on each page, on the dates appearing with their signature on that page.
This file or an individual page shall not be considered a certified document.

DocuSign Envelope ID: 22B9EE86-A4FA-4CBE-BB28-FE41CCDED726

08/17/11

TIP PROJECT: 17BP.14.R.132

CONTRACT: DN-000112

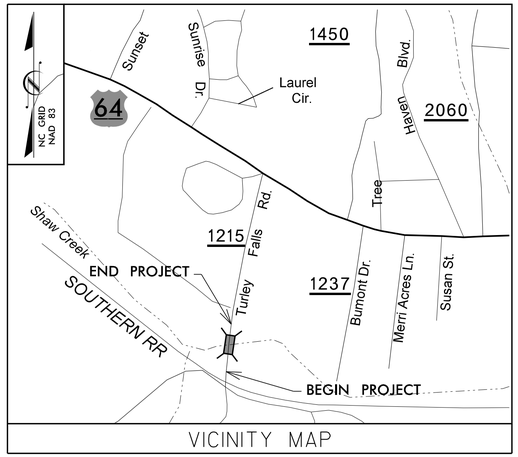

VICINITY MAP

STATE OF NORTH CAROLINA
DIVISION OF HIGHWAYS

HENDERSON COUNTY

LOCATION: BRIDGE NO. 135 OVER SHAW CREEK ON SR 1215 (TURLEY FALLS ROAD)

TYPE OF WORK: GRADING, DRAINAGE, PAVING, AND STRUCTURE

STATE	STATE PROJECT REFERENCE NO.	SHEET NO.	TOTAL SHEETS
N.C.	17BP.14.R.132	1	

STATE PROJ. NO.	F. A. PROJ. NO.	DESCRIPTION
45360.1.25	BRZ-1215(3)	PE
45360.2.25	BRZ-1215(3)	R/W & UTIL
45360.3.25	BRZ-1215(3)	CONSTR.

4

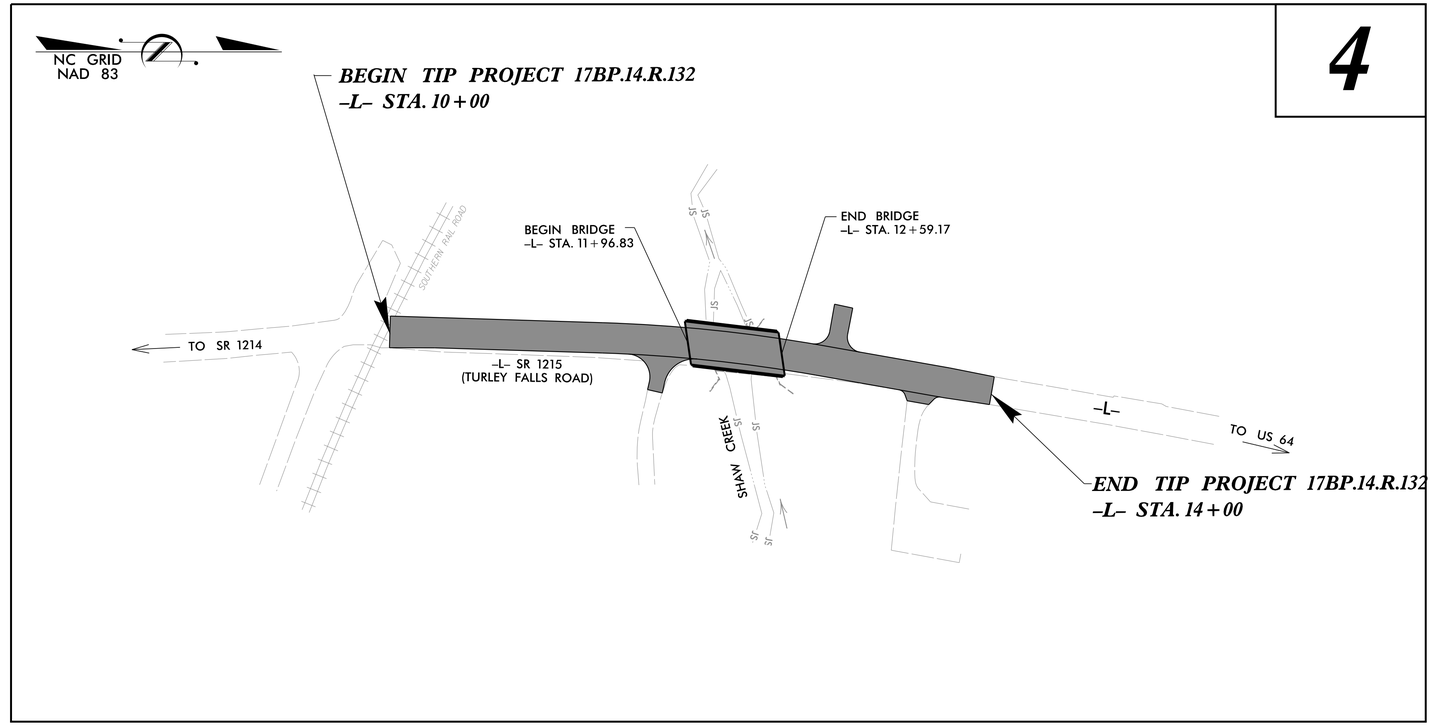

Vaughn & Melton
Consulting Engineers
Asheville, North Carolina 828-253-2796
Charlotte, North Carolina 704-357-0488
Tri-Cities, Tennessee 423-467-8400
Knoxville, Tennessee 865-546-5800
Middlesboro, Kentucky 606-248-6600
Spartanburg, South Carolina 864-574-4775
Copyright © 1994, Vaughn & Melton, Inc.
All Rights Reserved

GRAPHIC SCALES

20 10 0 20 40
PLANS

20 10 0 20 40
PROFILE (HORIZONTAL)

4 2 0 4 8
PROFILE (VERTICAL)

DESIGN DATA

ADT 2013 = 560
ADT 2035 = 1340
T = 7%
V = 35 MPH

FUNC CLASS = LOCAL

PROJECT LENGTH

LENGTH ROADWAY TIP PROJECT 17BP.14.R.132 =	0.064 MI
LENGTH STRUCTURE TIP PROJECT 17BP.14.R.132 =	0.012 MI
TOTAL LENGTH OF TIP PROJECT 17BP.14.R.132 =	0.076 MI

Prepared in the Office of:
VAUGHN & MELTON
1318-F PATTON AVE.
ASHEVILLE NC, 28806
FOR THE NORTH CAROLINA DIVISION OF HIGHWAYS

2012 STANDARD SPECIFICATIONS

RIGHT OF WAY DATE:
MAY 9, 2013

LETTING DATE:
FEBRUARY 27, 2014

REECE SCHULER, PE
PROJECT ENGINEER

AARON CARVER, PE
PROJECT DESIGN ENGINEER

NCDOT CONTACT:
JOSH DEYTON, PE
DIVISION 14 - BRIDGE MANAGER

HYDRAULICS ENGINEER

DocuSigned by:
29E802BEB76D44D...
SIGNATURE:
P.E.
NORTH CAROLINA PROFESSIONAL SEAL 31977 ENGINEER KEVIN B. ALCORN
10/22/2015

ROADWAY DESIGN ENGINEER

DocuSigned by:
Reece M. Schuler
16B34024C7824FC...
SIGNATURE:
P.E.
NORTH CAROLINA PROFESSIONAL SEAL 26960 ENGINEER REECE M. SCHULER
10/22/2015

DIVISION OF HIGHWAYS STATE OF NORTH CAROLINA

STATE OF NORTH CAROLINA DEPARTMENT OF TRANSPORTATION

$$$$$$$SYSTIME$$$$$
$$$$$$$$$$$$$$$$DGN$$$$$$$$$$$$$$$$
$$$$$$USERNAME$$$$

PROJECT REFERENCE NO.	SHEET NO.
17BP.14.R.132	1-A

ROADWAY DESIGN ENGINEER

NORTH CAROLINA PROFESSIONAL SEAL 26960 ENGINEER
10/21/2015

INDEX OF SHEETS

SHEET NUMBER	SHEET
1	TITLE SHEET
1-A	INDEX OF SHEETS, GENERAL NOTES, AND LIST OF STANDARD DRAWINGS
1-B	CONVENTIONAL SYMBOLS
1-C	SURVEY CONTROL SHEET
2	PAVEMENT SCHEDULE, TYPICAL SECTIONS, AND WEDGING DETAILS
2-A	STRUCTURE UNIT ANCHOR DETAIL
2-B	MODIFIED CONCRETE FLUME
3-A	SUMMARY OF DRAINAGE QUANTITIES, SUMMARY OF GUARDRAIL, AND ASPHALT PAVEMENT REMOVAL SUMMARY
4	PLAN AND PROFILE SHEET
TMP-1 THRU TMP-5	TRAFFIC MANAGEMENT PLANS
PM-1	PAVEMENT MARKING PLAN
SIG-1	SIGNAL PLAN
EC-1 THRU EC-3A	EROSION CONTROL PLANS
RF1	REFORESTATION DETAIL SHEET
UO-1 THRU UO-2	UTILITIES BY OTHERS
X-0	CROSS-SECTION SUMMARY
X-1 THRU X-5	CROSS-SECTIONS
S-1 THRU S-22	STRUCTURE PLANS

GENERAL NOTES:

2012 SPECIFICATIONS
EFFECTIVE: 01-17-2012
REVISED: 07-30-2012

GRADING AND SURFACING OR RESURFACING AND WIDENING:

THE GRADE LINES SHOWN DENOTE THE FINISHED ELEVATION OF THE PROPOSED SURFACING AT GRADE POINTS SHOWN ON THE TYPICAL SECTIONS. WHERE NO GRADE LINES ARE SHOWN, THE PROFILES SHOWN DENOTE THE TOP ELEVATION OF THE EXISTING PAVEMENT ALONG THE CENTER LINE OF SURVEY ON WHICH THE PROPOSED RESURFACING WILL BE PLACED. GRADE LINES MAY BE ADJUSTED BY THE ENGINEER IN ORDER TO SECURE A PROPER TIE-IN.

CLEARING:

CLEARING ON THIS PROJECT SHALL BE PERFORMED TO THE LIMITS ESTABLISHED BY METHOD II.

SUPERELEVATION:

ALL CURVES ON THIS PROJECT SHALL BE SUPERELEVATED IN ACCORDANCE WITH STD. NO. 225.04 USING THE RATE OF SUPERELEVATION AND RUNOFF SHOWN ON THE PLANS. SUPERELEVATION IS TO BE REVOLVED ABOUT THE GRADE POINTS SHOWN ON THE TYPICAL SECTIONS.

SHOULDER CONSTRUCTION:

ASPHALT, EARTH, AND CONCRETE SHOULDER CONSTRUCTION ON THE HIGH SIDE OF SUPERELEVATED CURVES SHALL BE IN ACCORDANCE WITH STD. NO. 560.01 AND/OR STD. NO. 560.02

UNDERDRAINS:

UNDERDRAINS SHALL BE CONSTRUCTED IN ACCORDANCE WITH STD. NO. 815.03 AT LOCATIONS DIRECTED BY THE ENGINEER.

GUARDRAIL:

THE GUARDRAIL LOCATIONS SHOWN ON THE PLANS MAY BE ADJUSTED DURING CONSTRUCTION AS DIRECTED BY THE ENGINEER. THE CONTRACTOR SHOULD CONSULT WITH THE ENGINEER PRIOR TO ORDERING GUARDRAIL MATERIAL.

TEMPORARY SHORING:

SHORING REQUIRED FOR THE MAINTENANCE OF TRAFFIC NOT SHOWN ON THE PLANS WILL BE PAID FOR AT THE CONTRACT PRICE FOR "TEMPORARY SHORING".

SUBSURFACE PLANS:

NO SUBSURFACE PLANS ARE AVAILABLE ON THIS PROJECT. THE CONTRACTOR SHOULD MAKE HIS OWN INVESTIGATION AS TO THE SUBSURFACE CONDITIONS.

END BENTS:

THE ENGINEER SHALL CHECK THE STRUCTURE END BENT PLANS, DETAILS, AND CROSS-SECTION PRIOR TO SETTING OF THE SLOPE STAKES FOR THE EMBANKMENT OR EXCAVATION APPROACHING A BRIDGE.

UTILITIES:

UTILITY OWNERS ON THIS PROJECT ARE DUKE ENERGY, MORRIS BROADBAND, AND AT&T.

RIGHT-OF-WAY MARKERS:

ALL RIGHT-OF-WAY MARKERS ON THIS PROJECT SHALL BE PLACED BY CONTRACT IN ACCORDANCE WITH SECTION 801 OF THE 2012 NORTH CAROLINA STANDARD SPECIFICATIONS FOR ROADS AND STRUCTURES.

EFF. 01-17-2012
REV. 10-30-2012

2012 ROADWAY ENGLISH STANDARD DRAWINGS

The following Roadway Standards as appear in "Roadway Standard Drawings" Highway Design Branch - N. C. Department of Transportation - Raleigh, N. C., Dated January, 2012 are applicable to this project and by reference hereby are considered a part of these plans:

STD.NO.	TITLE
DIVISION 2 - EARTHWORK	
200.02	Method of Clearing - Method II
225.02	Guide for Grading Subgrade - Secondary and Local
225.04	Method of Obtaining Superelevation - Two Lane Pavement
DIVISION 3 - PIPE CULVERTS	
300.01	Method of Pipe Installation - Method 'A'
310.10	Driveway Pipe Construction
DIVISION 4 - MAJOR STRUCTURES	
422.11	Reinforced Bridge Approach Fills - Sub Regional Tier
DIVISION 5 - SUBGRADE, BASES AND SHOULDERS	
560.01	Method of Shoulder Construction - High Side of Superelevated Curve - Method I
DIVISION 8 - INCIDENTALS	
815.03	Pipe Underdrain and Blind Drain
838.01	Concrete Endwall for Single and Double Pipe Culverts - 15" thru 48" Pipe 90 Skew
862.01	Guardrail Placement
862.02	Guardrail Installation

$$$$SYSTIME$$$$
$$$$DGN$$$$
$$$$USERNAME$$$$

04/06/15

PROJECT REFERENCE NO.	SHEET NO.
17BP.14.R.J32	1-B

STATE OF NORTH CAROLINA, DIVISION OF HIGHWAYS

CONVENTIONAL PLAN SHEET SYMBOLS

Note: Not to Scale **S.U.E. = Subsurface Utility Engineering*

BOUNDARIES AND PROPERTY:

- State Line
- County Line
- Township Line
- City Line
- Reservation Line
- Property Line
- Existing Iron Pin — EIP
- Property Corner
- Property Monument — ECM
- Parcel/Sequence Number — 123
- Existing Fence Line
- Proposed Woven Wire Fence
- Proposed Chain Link Fence
- Proposed Barbed Wire Fence
- Existing Wetland Boundary — WLB
- Proposed Wetland Boundary — WLB
- Existing Endangered Animal Boundary — EAB
- Existing Endangered Plant Boundary — EPB
- Existing Historic Property Boundary — HPB
- Known Contamination Area: Soil
- Potential Contamination Area: Soil
- Known Contamination Area: Water
- Potential Contamination Area: Water
- Contaminated Site: Known or Potential

BUILDINGS AND OTHER CULTURE:

- Gas Pump Vent or U/G Tank Cap
- Sign — S
- Well — W
- Small Mine
- Foundation
- Area Outline
- Cemetery
- Building
- School
- Church
- Dam

HYDROLOGY:

- Stream or Body of Water
- Hydro, Pool or Reservoir
- Jurisdictional Stream — JS
- Buffer Zone 1 — BZ 1
- Buffer Zone 2 — BZ 2
- Flow Arrow
- Disappearing Stream
- Spring
- Wetland
- Proposed Lateral, Tail, Head Ditch — FLOW
- False Sump

RAILROADS:

- Standard Gauge — CSX TRANSPORTATION
- RR Signal Milepost — MILEPOST 35
- Switch — SWITCH
- RR Abandoned
- RR Dismantled

RIGHT OF WAY:

- Baseline Control Point
- Existing Right of Way Marker
- Existing Right of Way Line
- Proposed Right of Way Line — RW
- Proposed Right of Way Line with Iron Pin and Cap Marker — RW
- Proposed Right of Way Line with Concrete or Granite R/W Marker — RW
- Proposed Control of Access Line with Concrete C/A Marker — CA
- Existing Control of Access — CA
- Proposed Control of Access — CA
- Existing Easement Line — E
- Proposed Temporary Construction Easement — E
- Proposed Temporary Drainage Easement — TDE
- Proposed Permanent Drainage Easement — PDE
- Proposed Permanent Drainage / Utility Easement — DUE
- Proposed Permanent Utility Easement — PUE
- Proposed Temporary Utility Easement — TUE
- Proposed Aerial Utility Easement — AUE
- Proposed Permanent Easement with Iron Pin and Cap Marker

ROADS AND RELATED FEATURES:

- Existing Edge of Pavement
- Existing Curb
- Proposed Slope Stakes Cut — C
- Proposed Slope Stakes Fill — F
- Proposed Curb Ramp — CR
- Existing Metal Guardrail
- Proposed Guardrail
- Existing Cable Guiderail
- Proposed Cable Guiderail
- Equality Symbol
- Pavement Removal

VEGETATION:

- Single Tree
- Single Shrub
- Hedge
- Woods Line
- Orchard
- Vineyard — Vineyard

EXISTING STRUCTURES:

MAJOR:

- Bridge, Tunnel or Box Culvert — CONC
- Bridge Wing Wall, Head Wall and End Wall — CONC WW

MINOR:

- Head and End Wall — CONC HW
- Pipe Culvert
- Footbridge
- Drainage Box: Catch Basin, DI or JB — CB
- Paved Ditch Gutter
- Storm Sewer Manhole — S
- Storm Sewer — S

UTILITIES:

POWER:

- Existing Power Pole
- Proposed Power Pole
- Existing Joint Use Pole
- Proposed Joint Use Pole
- Power Manhole — P
- Power Line Tower
- Power Transformer
- U/G Power Cable Hand Hole
- H-Frame Pole
- U/G Power Line LOS B (S.U.E.*) — P
- U/G Power Line LOS C (S.U.E.*) — P
- U/G Power Line LOS D (S.U.E.*) — P

TELEPHONE:

- Existing Telephone Pole
- Proposed Telephone Pole
- Telephone Manhole — T
- Telephone Pedestal — T
- Telephone Cell Tower
- U/G Telephone Cable Hand Hole
- U/G Telephone Cable LOS B (S.U.E.*) — T
- U/G Telephone Cable LOS C (S.U.E.*) — T
- U/G Telephone Cable LOS D (S.U.E.*) — T
- U/G Telephone Conduit LOS B (S.U.E.*) — TC
- U/G Telephone Conduit LOS C (S.U.E.*) — TC
- U/G Telephone Conduit LOS D (S.U.E.*) — TC
- U/G Fiber Optics Cable LOS B (S.U.E.*) — T FO
- U/G Fiber Optics Cable LOS C (S.U.E.*) — T FO
- U/G Fiber Optics Cable LOS D (S.U.E.*) — T FO

WATER:

- Water Manhole — W
- Water Meter
- Water Valve
- Water Hydrant
- U/G Water Line LOS B (S.U.E*) — W
- U/G Water Line LOS C (S.U.E*) — W
- U/G Water Line LOS D (S.U.E*) — W
- Above Ground Water Line — A/G Water

TV:

- TV Pedestal — C
- TV Tower
- U/G TV Cable Hand Hole — HH
- U/G TV Cable LOS B (S.U.E.*) — TV
- U/G TV Cable LOS C (S.U.E.*) — TV
- U/G TV Cable LOS D (S.U.E.*) — TV
- U/G Fiber Optic Cable LOS B (S.U.E.*) — TV FO
- U/G Fiber Optic Cable LOS C (S.U.E.*) — TV FO
- U/G Fiber Optic Cable LOS D (S.U.E.*) — TV FO

GAS:

- Gas Valve
- Gas Meter
- U/G Gas Line LOS B (S.U.E.*) — G
- U/G Gas Line LOS C (S.U.E.*) — G
- U/G Gas Line LOS D (S.U.E.*) — G
- Above Ground Gas Line — A/G Gas

SANITARY SEWER:

- Sanitary Sewer Manhole
- Sanitary Sewer Cleanout
- U/G Sanitary Sewer Line — SS
- Above Ground Sanitary Sewer — A/G Sanitary Sewer
- SS Forced Main Line LOS B (S.U.E.*) — FSS
- SS Forced Main Line LOS C (S.U.E.*) — FSS
- SS Forced Main Line LOS D (S.U.E.*) — FSS

MISCELLANEOUS:

- Utility Pole
- Utility Pole with Base
- Utility Located Object
- Utility Traffic Signal Box — S
- Utility Unknown U/G Line LOS B (S.U.E.*) — ?UTL
- U/G Tank; Water, Gas, Oil
- Underground Storage Tank, Approx. Loc. — UST
- A/G Tank; Water, Gas, Oil
- Geoenvironmental Boring
- U/G Test Hole LOS A (S.U.E.*)
- Abandoned According to Utility Records — AATUR
- End of Information — E.O.I.

PROJECT REFERENCE NO.	SHEET NO.
17BP.14.R.132	1-C
Location and Surveys	

SURVEY CONTROL SHEET BD-5114Y

BL

POINT	DESC.	NORTH	EAST	ELEVATION	L STATION	OFFSET
1	BL-1	592649.6195	950350.1537	2115.56	10+20.06	14.74 LT
2	BL-2	592895.8165	950371.5628	2115.84	12+66.01	8.97 LT
3	BL-3	593170.9790	950442.4101	2121.79	15+49.14	13.17 RT

BM1 ELEVATION = 2117.81
N 592599 E 950377
BL STATION 5+00.00
S 27°54'12" E DIST 57.63'
NAIL IN BASE OF RR CROSSING SIGN

BM2 ELEVATION = 2124.77
N 593166 E 950403
BL STATION 10+17.00 37 LEFT
NAIL IN BASE OF UTILITY POLE

ROW MARKER PERMENANT EASEMENT-E

ALIGN	STATION	OFFSET	NORTH	EAST
L	10+46.00	-27.42	592675.9420	950338.2962
L	10+73.62	-55.71	592704.4274	950310.8834
L	10+80.00	-53.92	592710.7523	950312.8689
L	10+80.00	-27.04	592709.9139	950339.7299

FINAL -L-

TYPE	STATION	NORTH	EAST
POT	10+00.00	592629.1091	950364.2638
PC	11+40.41	592769.4493	950368.6444
PT	12+83.74	592911.8981	950383.3499
POT	15+50.51	593174.6162	950429.6741

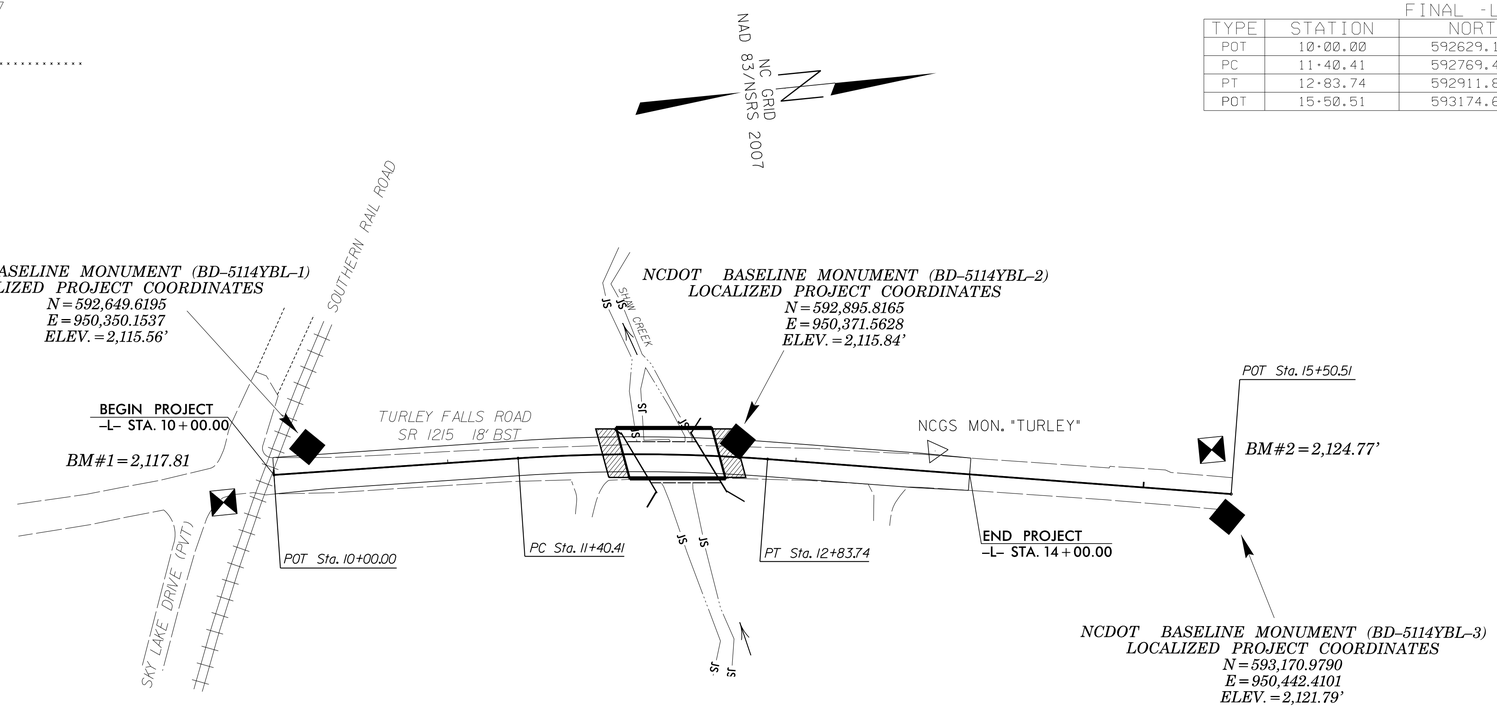

DATUM DESCRIPTION

THE LOCALIZED COORDINATE SYSTEM DEVELOPED FOR THIS PROJECT IS BASED ON THE STATE PLANE COORDINATES ESTABLISHED BY NCDOT FOR MONUMENT "440135 BL-2"
WITH NAD 83/NSRS 2007 STATE PLANE GRID COORDINATES OF
NORTHING: 592895.8165(ft) EASTING: 950371.5628(ft)
ELEVATION: 2115.84(ft)
THE AVERAGE COMBINED GRID FACTOR USED ON THIS PROJECT (GROUND TO GRID) IS: 0.99984380
THE N.C. LAMBERT GRID BEARING AND LOCALIZED HORIZONTAL GROUND DISTANCE FROM "440135 BL-2" TO -L- STATION 10+00.00 IS
S 1°34'03" W 266.81'
ALL LINEAR DIMENSIONS ARE LOCALIZED HORIZONTAL DISTANCES
VERTICAL DATUM USED IS NAVD 88

NOTES:

1. THE CONTROL DATA FOR THIS PROJECT CAN BE FOUND ELECTRONICALLY BY SELECTING PROJECT CONTROL DATA AT:
HTTP://WWW.NCDOT.ORG/DOH/PRECONSTRUCT/HIGHWAY/LOCATION/PROJECT/

THE FILES TO BE FOUND ARE AS FOLLOWS:
BD-5114Y_LS_CONTROL_131223.TXT

SITE CALIBRATION INFORMATION HAS NOT BEEN PROVIDED FOR THIS PROJECT. IF FURTHER INFORMATION IS NEEDED, PLEASE CONTACT THE LOCATION AND SURVEYS UNIT.

■ INDICATES GEODETIC CONTROL MONUMENTS USED OR SET FOR HORIZONTAL PROJECT CONTROL BY THE NCDOT LOCATION AND SURVEYS UNIT.
PROJECT CONTROL ESTABLISHED USING GLOBAL POSITIONING SYSTEM.
NETWORK ESTABLISHED FROM NGS ONLINE POSITIONING SERVICE (OPUS)

NOTE: DRAWING NOT TO SCALE

6/2/99

DocuSign Envelope ID: E9225FD0-13A5-467A-9BE5-9F01A30562A3

PROJECT REFERENCE NO.	SHEET NO.
17BP.14.R.132	2
ROADWAY DESIGN ENGINEER	PAVEMENT DESIGN ENGINEER
NORTH CAROLINA PROFESSIONAL SEAL 26960 ENGINEER REECE M. SCHULER	NORTH CAROLINA PROFESSIONAL SEAL 20134 ENGINEER ROBERT M. CRISP
DocuSigned by: Reece M. Schuler 10/22/2015	DocuSigned by: Robert M. Crisp 10/22/2015
16634024C7824FC...	56AE951EA2424B2...

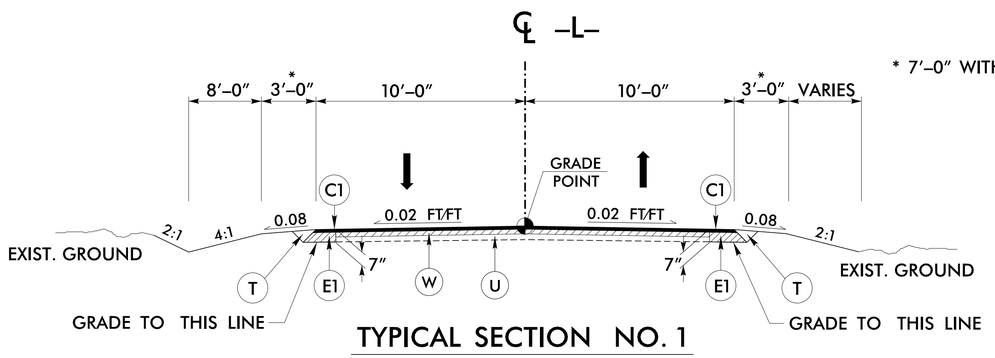

* 7′–0″ WITH GUARDRAIL

TYPICAL SECTION NO. 1

USE TYPICAL SECTION NO. 1

–L– STA. 10+00 TO –L– STA. 11+96.83 (BEGIN BRIDGE)
–L– STA. 12+59.17 (END BRIDGE) TO –L– STA. 14+00.00

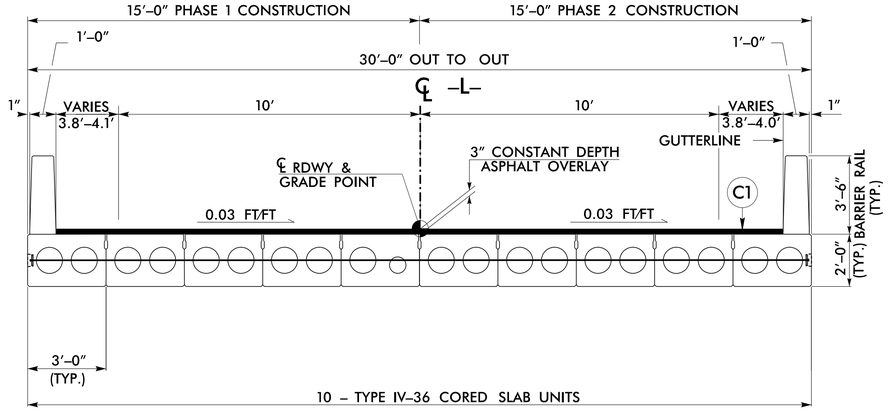

TYPICAL SECTION NO. 2

USE TYPICAL SECTION NO. 2

–L– STA. 11+96.83 (BEGIN BRIDGE) TO
–L– STA. 12+59.17 (END BRIDGE)

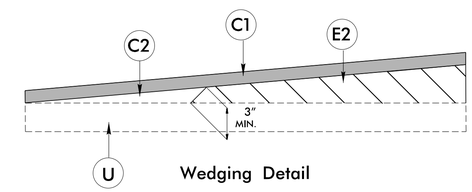

Wedging Detail

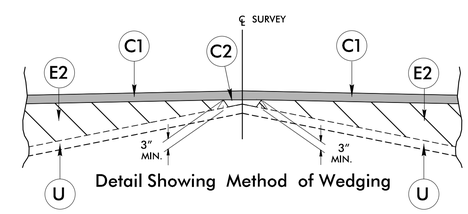

Detail Showing Method of Wedging

	PAVEMENT SCHEDULE
C1	PROP. APPROX. 3″ ASPHALT CONCRETE SURFACE COURSE, TYPE S9.5B, AT AN AVERAGE RATE OF 168 LBS. PER SQ. YD. IN EACH OF TWO LAYERS.
C2	PROP. VAR. DEPTH ASPHALT CONCRETE SURFACE COURSE, TYPE S9.5B AT AN AVERAGE RATE OF 112 LBS. PER SQ. YD. PER 1″ DEPTH. TO BE PLACED IN LAYERS NOT TO EXCEED 1½″ IN DEPTH.
E1	PROP. APPROX. 4″ ASPHALT CONCRETE BASE COURSE, TYPE B25.0B, AT AN AVERAGE RATE OF 456 LBS. PER SQ. YD.
E2	PROP. VAR. DEPTH ASPHALT CONCRETE BASE COURSE, TYPE B25.0B, AT AN AVERAGE RATE OF 114 LBS. PER SQ. YD. PER 1″ DEPTH. TO BE PLACED IN LAYERS NOT LESS THAN 3″ IN DEPTH OR GREATER THAN 5½″ IN DEPTH.
T	EARTH MATERIAL
U	EXISTING PAVEMENT
W	PROPOSED WEDGING (SEE APPROPRIATE DETAILS)

NOTE: PAVEMENT EDGE SLOPES ARE 1:1 UNLESS SHOWN OTHERWISE

6/2/99
SYTYLESHEET
DGN
PLEDRAFT

STATE OF NORTH CAROLINA
DEPT. OF TRANSPORTATION
DIVISION OF HIGHWAYS
RALEIGH, N.C.

ENGLISH DETAIL DRAWING FOR
STRUCTURE ANCHOR UNITS
GUARDRAIL ANCHOR UNIT, TYPE III FOR ATTACHMENT TO RAIL ON BRIDGE - SUB REGIONAL TIER

SHEET 2 OF 7
862d03

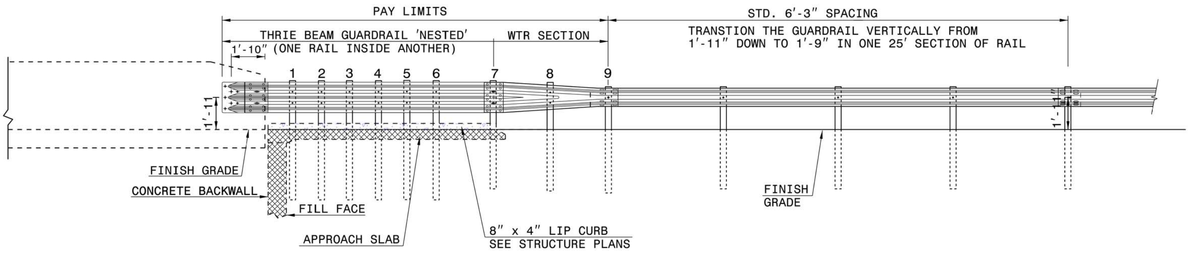

ELEVATION

NOTE:
- **POST NOT REQUIRED FOR SKEW ANGLES GREATER THAN 150° OR LESS THAN 30° UNLESS OTHERWISE DIRECTED BY THE ENGINEER.
- *THE DISTANCE FROM END OF BRIDGE RAIL TO CENTER LINE OF THE FIRST POST SHOULD BE 11½" IF CONCRETE BACKWALL IS NOT PRESENT.
- -SHOULDER BERM GUTTER MUST BE INSTALLED TO THE LIMITS 8" x 4" LIP CURB IS SHOWN IF ANCHOR UNIT IS NOT ADJACENT TO AN APPROACH SLAB.
- -MEASURE GUARDRAIL HEIGHT FROM THE TOP OF ADJACENT SURFACE (SHOULDER, BERM, OR GUTTER).
- -LAP JOINTS IN THE DIRECTION OF TRAFFIC FLOW.
- -SEE SHEET 5 FOR POST SECTIONS 1 THRU 9.

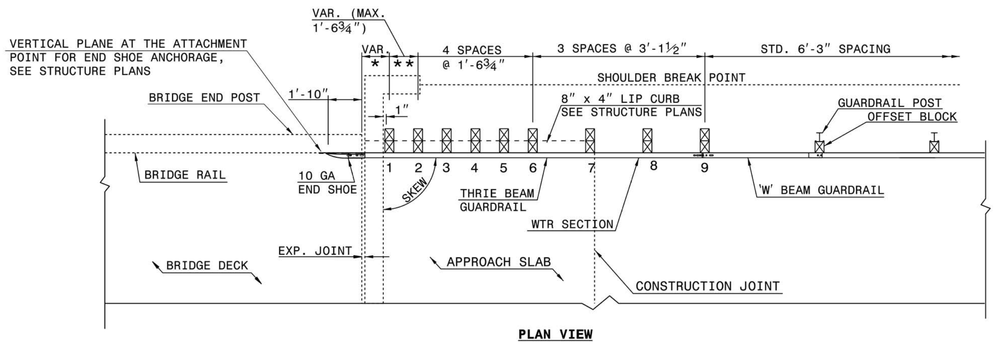

PLAN VIEW

GUARDRAIL ANCHOR UNIT, TYPE III FOR ATTACHMENT TO RAIL ON BRIDGE - SUB REGIONAL TIER

STATE OF NORTH CAROLINA
DEPT. OF TRANSPORTATION
DIVISION OF HIGHWAYS
RALEIGH, N.C.

ENGLISH DETAIL DRAWING FOR
STRUCTURE ANCHOR UNITS
GUARDRAIL ANCHOR UNIT, TYPE III FOR ATTACHMENT TO RAIL ON BRIDGE - SUB REGIONAL TIER

SHEET 2 OF 7
862d03

STATE OF NORTH CAROLINA
DEPT. OF TRANSPORTATION
DIVISION OF HIGHWAYS
RALEIGH, N.C.

ENGLISH DETAIL DRAWING FOR
STRUCTURE ANCHOR UNITS
GUARDRAIL ANCHOR UNIT, TYPE III

SHEET 3 OF 7
862d03

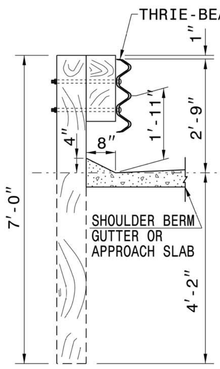

SECTION OF THRIE BEAM POSTS 1 THRU 6

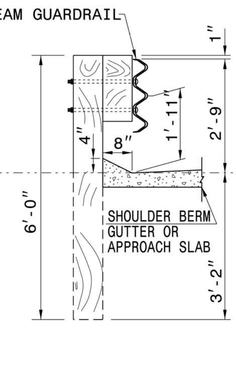

SECTION OF THRIE BEAM POST 7

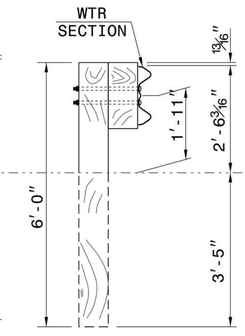

SECTION OF WTR BEAM POST 8

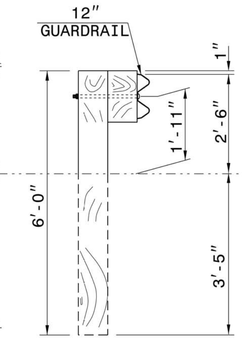

SECTION OF 'W' BEAM POST 9

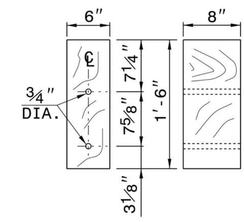

THRIE BEAM OFFSET BLOCK

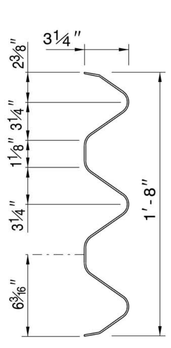

THRIE-BEAM SECTION

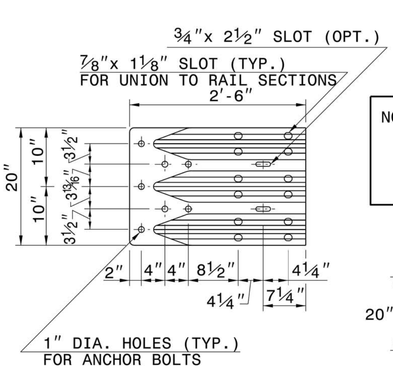

END SHOE

NOTE: THE MID POST AND OFFSET BLOCK OF THE WTR SECTION WILL REQUIRE SPECIAL BOLT HOLE DRILLING IN THE THRIE BEAM OFFSET BLOCK AND LINE POST.

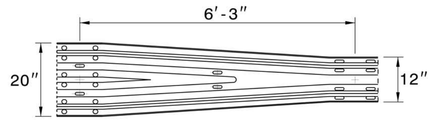

WTR SECTION
ELEVATION VIEW

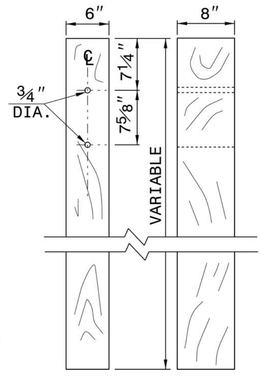

THRIE BEAM LINE POST

ENGLISH DETAIL DRAWING FOR
STRUCTURE ANCHOR UNITS
GUARDRAIL ANCHOR UNIT, TYPE III

SHEET 3 OF 7
862d03

CONTRACT STANDARDS AND DEVELOPMENT UNIT
Office 919-707-6950 FAX 919-250-4119

SEE TITLE BLOCK

ORIGINAL BY: J. HOWERTON DATE: 06-22-12
MODIFIED BY: DATE:
CHECKED BY: DATE:
FILE SPEC.:

PROJECT REFERENCE NO. 17BP.14.R.132
SHEET NO. 2-A

STATE OF NORTH CAROLINA
DEPT. OF TRANSPORTATION
DIVISION OF HIGHWAYS
RALEIGH, N.C.

ENGLISH DETAIL DRAWING FOR
STRUCTURE ANCHOR UNITS
GUARDRAIL ANCHOR UNIT, TYPE III FOR ATTACHMENT TO RAIL ON BRIDGE - SUB REGIONAL TIER

SHEET 2 OF 7
862d03

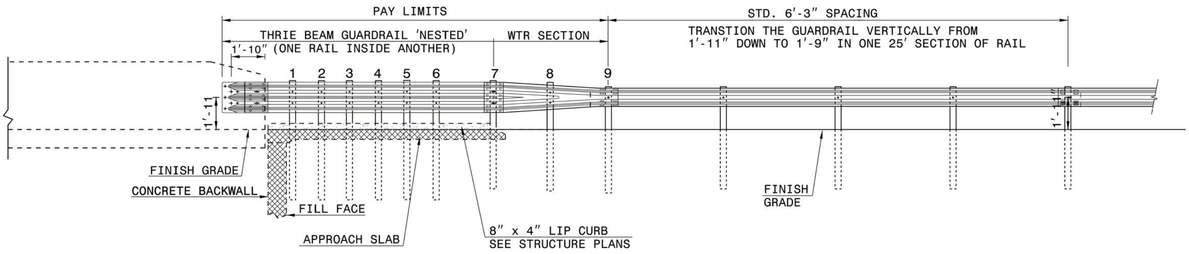

ELEVATION

NOTE:
- **POST NOT REQUIRED FOR SKEW ANGLES GREATER THAN 150° OR LESS THAN 30° UNLESS OTHERWISE DIRECTED BY THE ENGINEER.
- *THE DISTANCE FROM END OF BRIDGE RAIL TO CENTER LINE OF THE FIRST POST SHOULD BE 11½" IF CONCRETE BACKWALL IS NOT PRESENT.
- -SHOULDER BERM GUTTER MUST BE INSTALLED TO THE LIMITS 8" x 4" LIP CURB IS SHOWN IF ANCHOR UNIT IS NOT ADJACENT TO AN APPROACH SLAB.
- -MEASURE GUARDRAIL HEIGHT FROM THE TOP OF ADJACENT SURFACE (SHOULDER, BERM, OR GUTTER).
- -LAP JOINTS IN THE DIRECTION OF TRAFFIC FLOW.
- -SEE SHEET 5 FOR POST SECTIONS 1 THRU 9.

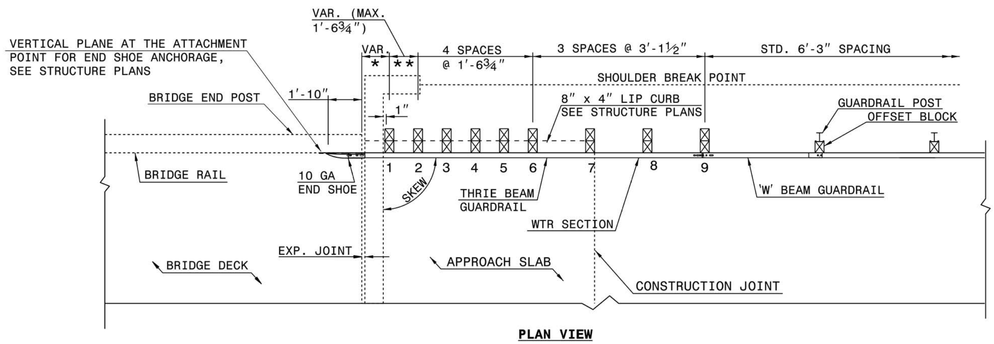

PLAN VIEW

GUARDRAIL ANCHOR UNIT, TYPE III FOR ATTACHMENT TO RAIL ON BRIDGE - SUB REGIONAL TIER

STATE OF NORTH CAROLINA
DEPT. OF TRANSPORTATION
DIVISION OF HIGHWAYS
RALEIGH, N.C.

ENGLISH DETAIL DRAWING FOR
STRUCTURE ANCHOR UNITS
GUARDRAIL ANCHOR UNIT, TYPE III FOR ATTACHMENT TO RAIL ON BRIDGE - SUB REGIONAL TIER

SHEET 2 OF 7
862d03

STATE OF NORTH CAROLINA
DEPT. OF TRANSPORTATION
DIVISION OF HIGHWAYS
RALEIGH, N.C.

ENGLISH DETAIL DRAWING FOR
STRUCTURE ANCHOR UNITS
GUARDRAIL ANCHOR UNIT, TYPE III

SHEET 3 OF 7
862d03

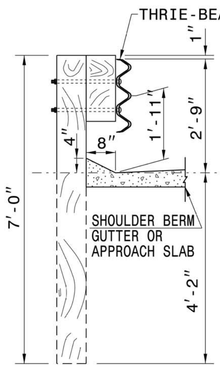

SECTION OF THRIE BEAM POSTS 1 THRU 6

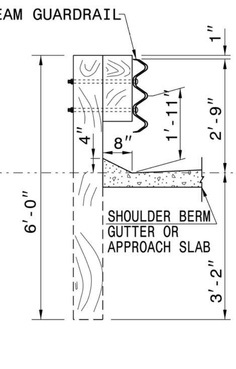

SECTION OF THRIE BEAM POST 7

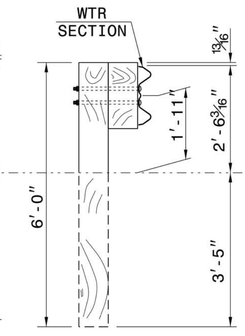

SECTION OF WTR BEAM POST 8

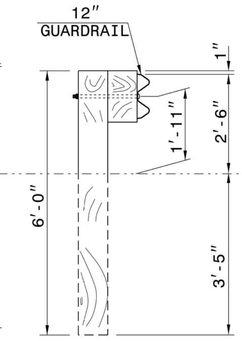

SECTION OF 'W' BEAM POST 9

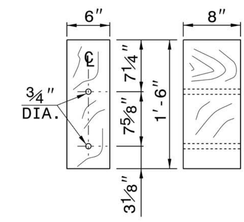

THRIE BEAM OFFSET BLOCK

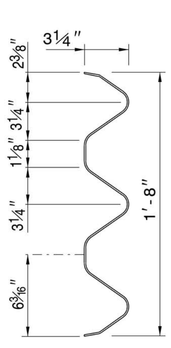

THRIE-BEAM SECTION

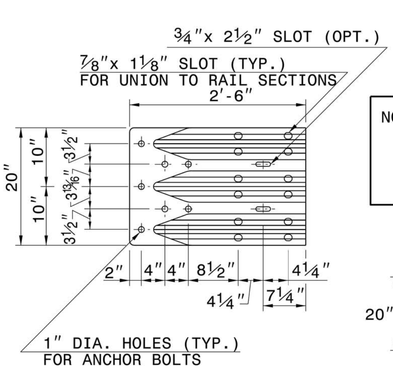

END SHOE

NOTE: THE MID POST AND OFFSET BLOCK OF THE WTR SECTION WILL REQUIRE SPECIAL BOLT HOLE DRILLING IN THE THRIE BEAM OFFSET BLOCK AND LINE POST.

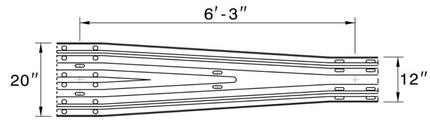

WTR SECTION
ELEVATION VIEW

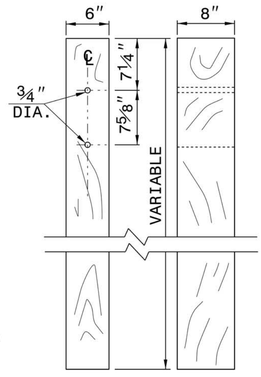

THRIE BEAM LINE POST

ENGLISH DETAIL DRAWING FOR
STRUCTURE ANCHOR UNITS
GUARDRAIL ANCHOR UNIT, TYPE III

SHEET 3 OF 7
862d03

CONTRACT STANDARDS AND DEVELOPMENT UNIT
Office 919-707-6950 FAX 919-250-4119

SEE TITLE BLOCK

ORIGINAL BY: J. HOWERTON DATE: 06-22-12
MODIFIED BY: DATE:
CHECKED BY: DATE:
FILE SPEC.:

PROJECT REFERENCE NO. 17BP.14.R.132
SHEET NO. 2-A

PROJECT REFERENCE NO.	SHEET NO.
17BPJ4.RJ32	2-B

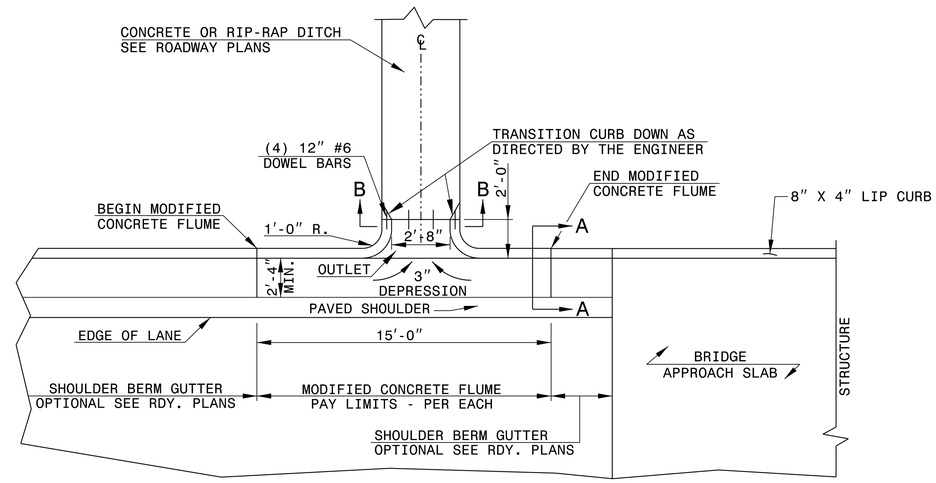

PLAN VIEW

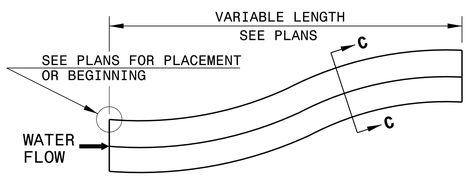

DOWNGRADE OR SAG

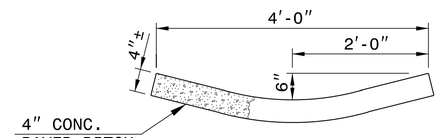

SECTION C-C

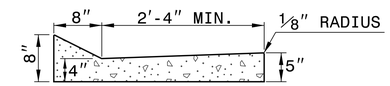

SECTION A-A

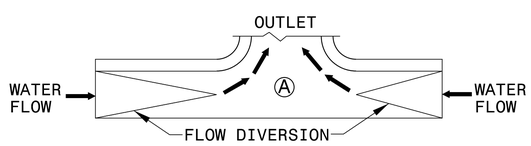

SAG

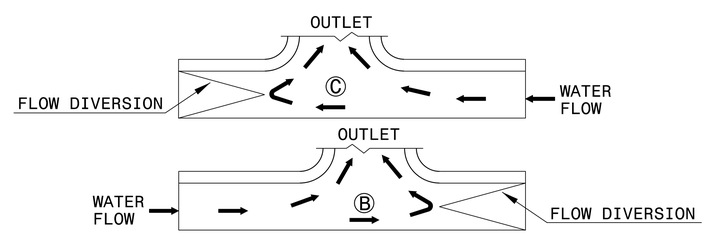

DOWN GRADE

FLOW DIVERSION EXAMPLES

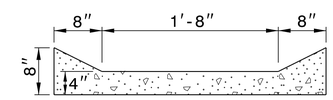

SECTION B-B

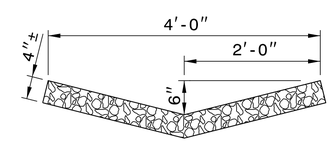

RIP-RAP LINED DITCH

NOTES:

- CONSTRUCT MODIFIED CONCRETE FLUME AND SHOULDER BERM GUTTER IN ACCORDANCE WITH THIS DETAIL.
- CONSTRUCT CONCRETE DITCH IN ACCORDANCE WITH STD. DWG. NO. 850.01.
- CONSTRUCT RIP RAP LINED DITCH IN ACCORDANCE WITH THIS DETAIL, IF CALLED FOR IN PLANS.
- CONCRETE OR RIP RAP LINED DITCH SHALL BE THE TYPE AND LENGTH SPECIFIED BY THE ROADWAY PLANS. THE DITCH SHALL TERMINATE AS SHOWN ON THE PLANS. IF NO TERMINATION IS INDICATED PLACE RIP-RAP AT THE END OF THE DITCH AS INDICATED BY STD. DWG. 876.02 FOR AN 18" PIPE. TRANSITIONS FROM THE DITCH TO TERMINATION SHALL BE AS DIRECTED BY THE ENGINEER.
- MODIFICATIONS SHALL BE AS DICTATED BY SITE CONDITIONS AND DIRECTED BY THE ENGINEER.
- MODIFIED CONCRETE FLUME OUTLET SHALL BE PLACED BETWEEN PROPOSED GUARDRAIL POSTS.

MODIFIED CONCRETE FLUME

COMPUTED BY: PHS	DATE: 12-27-13
CHECKED BY: RMS	DATE: 12-27-13

STATE OF NORTH CAROLINA
DIVISION OF HIGHWAYS

PROJECT REFERENCE NO.	SHEET NO.
17BP.14.R.132	3-A

SUMMARY OF EARTHWORK
IN CUBIC YARDS

LOCATION	UNCLASSIFIED EXCAVATION	UNDERCUT	EMBT+%	BORROW	WASTE
SUMMARY NO.1					
-L- STA. 10+00 TO STA. 11+96.84 (BEG. BRIDGE)	287		214		73
SUBTOTAL SUMMARY NO.1	287		214		73
SUMMARY NO.2					
-L- STA. 12+59.18 (END BRIDGE) TO STA. 14+00.00	99		89		10
SUBTOTAL SUMMARY NO.2	99		89		10
PROJECT SUBTOTAL	386		303		60
GRAND TOTAL	386		303		83
SAY	390				

NOTE: Earthwork quantities are calculated by the Roadway Design Unit. These earthwork quantities are based in part on subsurface data provided by the Geotechnical Engineering Unit.

Approximate quantities only. Unclassified Excavation, Borrow Excavation, Fine Grading, Clearing and Grubbing, Breaking of Existing Pavement, and Removal of Existing Pavement will be paid for at the contract lump sum price for "Grading."

CONTINGENCY ITEMS:
INCIDENTAL STONE = 30 TONS
UNDERCUT EXCAVATION = 50 CY
SELECT GRANULAR MATERIAL = 50 CY
CLASS IV SUBGRADE STABILIZATION = 50 TONS
GEOTEXTILE FOR SOIL STABILIZATION = 50 SY

DDE EXCAVATION = 363 CY

PAVEMENT REMOVAL SUMMARY

IN SQUARE YARDS					
LINE	LOCATION	ASPHALT REMOVAL	ASPHALT BREAK-UP	CONCRETE REMOVAL	CONCRETE REMOVAL
-L-	10+00 TO 11+60	48			
-L-	12+70 TO 13+37	5			
	TOTAL	53			
	SAY	55			

SUB-REGIONAL & REGIONAL LIST OF PIPES, ENDWALLS, ETC. (FOR PIPES 48" & UNDER)

STATION / SIZE / THICKNESS OR GAUGE	LOCATION (LT,RT, OR CL)	STRUCTURE NO. FROM	STRUCTURE NO. TO	TOP ELEVATION	INVERT ELEVATION	INVERT ELEVATION	SLOPE CRITICAL	DRAINAGE PIPE (RCP, CSP, CAAP, HDPE, or PVC) 12"	15"	18"	24"	30"	36"	42"	48"	DO NOT USE RCP	DO NOT USE CSP	DO NOT USE CAAP	DO NOT USE HDPE
-L- 10+45.81	CL	401		2109.93	2109.74							64							
-L- 11+86.35	RT	402																	
-L- 12+93.65	LT	403																	
TOTAL												64							

STATION	C.S. PIPE 12" (.064)	15" (.064)	18" (.064)	24" (.064)	36" (.079)	42" (.109)	48" (.109)	R.C. PIPE (CLASS III) 15"	18"	24"	30"	36"	42"	48"	R.C. PIPE (CLASS IV) 12"	15"	18"	24"	30"	36"	42"	48"
-L- 10+45.81																						
-L- 11+86.35																						
-L- 12+93.65																						
TOTAL																						

STATION	**" R. C. PIPE (CLASS V)	**" R. C. PIPE CULVERTS, CONTRACTOR DESIGN PIPE	**" R. C. PIPE CULVERTS, CONTRACTOR DESIGN PIPE	15" SIDE DRAIN PIPE	18" SIDE DRAIN PIPE	ENDWALLS STD. 838.01, STD. 838.11 OR STD. 838.80 (UNLESS NOTED OTHERWISE) CU. YDS. R.C.P.	C.S.P.	QUANTITIES FOR DRAINAGE STRUCTURES PER EACH (0' THRU 5.0')	* TOTAL L.F. FOR PAY QUANTITY SHALL BE COL. 'A' + (1.3 X COL.'B') LIN. *FT. A 5.0' THRU 10.0'	B 10.0' AND ABOVE	C.B. STD. 840.01 OR STD. 840.02
-L- 10+45.81											
-L- 11+86.35											
-L- 12+93.65				24							
TOTAL				24							

STATION	FRAME, GRATES AND HOOD STANDARD 840.03 TYPE OF GRATE E	F	G		CONCRETE TRANSITIONAL SECTION CATCH BASIN	DROP INLET	T.B.D.I STD. 840.35	T.B.D.I FRAME WITH TWO GRATES STD. 840.29	MODIFIED CONCRETE FLUME				CORR. STEEL ELBOWS NO. & SIZE	CONC. COLLARS CL. "B" C.Y. STD 840.72	CONC. & BRICK PIPE PLUG, C.Y. STD. 840.71	PIPE REMOVAL LIN.FT.	REMARKS
-L- 10+45.81																	
-L- 11+86.35									1								
-L- 12+93.65																20	REMOVE 12" HDPE
TOTAL									1							20	

ABBREVIATIONS

- C.B. — CATCH BASIN
- N.D.I. — NARROW DROP INLET
- D.I. — DROP INLET
- G.D.I. — GRATED DROP INLET
- G.D.I. (N.S.) — GRATED DROP INLET (NARROW SLOT)
- J.B. — JUNCTION BOX
- M.H. — MANHOLE
- T.B.D.I. — TRAFFIC BEARING DROP INLET
- T.B.J.B. — TRAFFIC BEARING JUNCTION BOX

NOTE: Invert Elevations are for Bid Purposes only and shall not be used for project construction stakeout.
See "Standard Specifications For Roads and Structures, Section 300-5".

"N" = DISTANCE FROM EDGE OF LANE TO FACE OF GUARDRAIL.
TOTAL SHOULDER WIDTH = DISTANCE FROM EDGE OF TRAVEL LANE TO SHOULDER BREAK POINT.
FLARE LENGTH = DISTANCE FROM LAST SECTION OF PARALLEL GUARDRAIL TO END OF GUARDRAIL.
W = TOTAL WIDTH OF FLARE FROM BEGINNING OF TAPER TO END OF GUARDRAIL.
G = GATING IMPACT ATTENUATOR TYPE 350
NG = NON-GATING IMPACT ATTENUATOR TYPE 350

GUARDRAIL SUMMARY

SURVEY LINE	BEG. STA.	END STA.	LOCATION	LENGTH STRAIGHT	LENGTH SHOP CURVED	TEMPORARY STRAIGHT	WARRANT POINT APPROACH END	WARRANT POINT TRAILING END	"N" DIST. FROM E.O.L.	TOTAL SHOUL. WIDTH	FLARE LENGTH APPROACH END	FLARE LENGTH TRAILING END	W APPROACH END	W TRAILING END
-L-	11+37.34	11+93.59	LT	56.25			11+93.59		4	4		25		1
-L-	11+75.17	12+00.17	RT		25			12+00.17	4	4				
-L-	12+55.07	12+80.07	LT		25			12+55.07	4	4				
-L-	12+63.39	13+19.64	RT	56.25			12+63.39		4	4		25		1
-L-	11+72.00	12+82.00	LT/RT			225								
			SUBTOTAL	112.5	50									
			LESS DEDUCTIONS FOR ANCHORS											
			GRAU-350 TL-2 2 @ 25'=	-50										
			TEMP GRAU-350 TL-2 4 @ 25'=			-100								
			TYPE III 2 @ 18.75'=	-37.5										
			TYPE III SHOP CURVED 2 @ 18.75'=		-37.5									
			AT-I 2 @ 6.25'=		-12.5									
			PROJECT TOTALS:	25		125								
ADDITIONAL GUARDRAIL POSTS=5 EA.														

SURVEY LINE	BEG. STA.	ANCHORS XI MOD	XI	GRAU 350 TL-2	M-350	TYPE III	TYPE III SHOP CURVED	B-77	BIC	AT-1	TEMP ANCHORS GRAU 350 TL-2	IMPACT ATTENUATOR TYPE 350 EA	G	NG	SINGLE FACED GUARDRAIL	REMOVE EXISTING GUARDRAIL	REMOVE AND STOCKPILE EXISTING GUARDRAIL	REMARKS
-L-	11+37.34			1		1												
-L-	11+75.17						1			1								
-L-	12+55.07						1			1								
-L-	12+63.39			1		1												
-L-	11+72.00										4							TEMPORARY GUARDRAIL FOR PHASE 1 AND 2
SUBTOTAL				2		2	2			2	4							

6/21/00
$$$$SYSTIME$$$$ $$$$DGN$$$$ $$$$USERNAME$$$$

DocuSign Envelope ID: 22B9EE86-A4FA-4CBE-BB28-FE41CCDED726

PROJECT REFERENCE NO.	SHEET NO.
17BP.14.R.132	4
R/W SHEET NO.	

ROADWAY DESIGN ENGINEER: NORTH CAROLINA PROFESSIONAL SEAL 26960 ENGINEER — Reece M. Schuler — 10/21/2015

HYDRAULICS ENGINEER: NORTH CAROLINA PROFESSIONAL SEAL 31977 ENGINEER — Kevin B. Alford — 10/22/2015

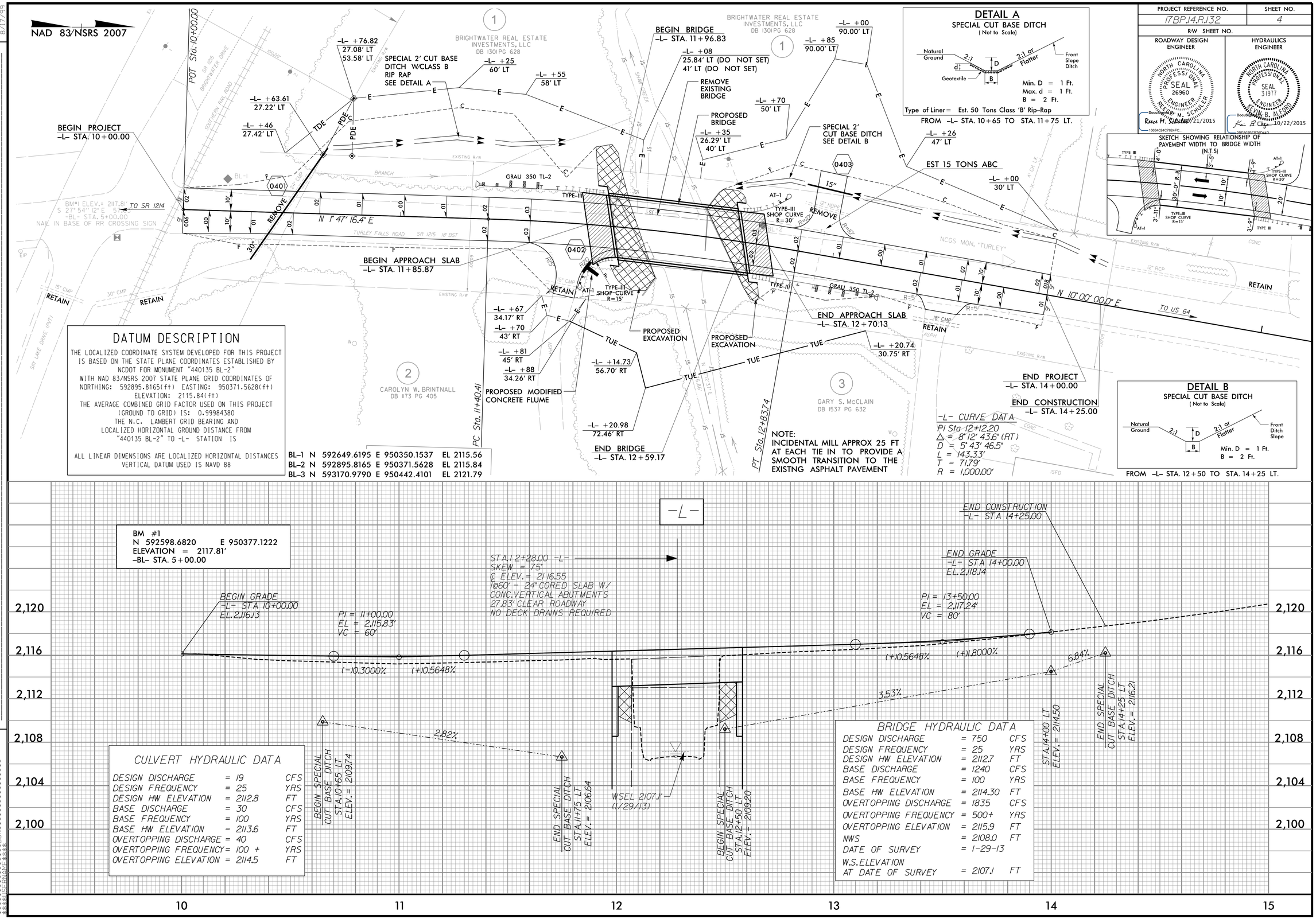

DETAIL A
SPECIAL CUT BASE DITCH
(Not to Scale)

Natural Ground, 2:1, d, D, B, Geotextile, 2:1 or Flatter, Front Slope Ditch

Min. D = 1 Ft.
Max. d = 1 Ft.
B = 2 Ft.

Type of Liner = Est. 50 Tons Class 'B' Rip-Rap

FROM -L- STA. 10+65 TO STA. 11+75 LT.

SKETCH SHOWING RELATIONSHIP OF PAVEMENT WIDTH TO BRIDGE WIDTH (N.T.S)

DATUM DESCRIPTION

THE LOCALIZED COORDINATE SYSTEM DEVELOPED FOR THIS PROJECT IS BASED ON THE STATE PLANE COORDINATES ESTABLISHED BY NCDOT FOR MONUMENT "440135 BL-2"
WITH NAD 83/NSRS 2007 STATE PLANE GRID COORDINATES OF
NORTHING: 592895.8165(ft) EASTING: 950371.5628(ft)
ELEVATION: 2115.84(ft)
THE AVERAGE COMBINED GRID FACTOR USED ON THIS PROJECT (GROUND TO GRID) IS: 0.99984380
THE N.C. LAMBERT GRID BEARING AND LOCALIZED HORIZONTAL GROUND DISTANCE FROM "440135 BL-2" TO -L- STATION IS

ALL LINEAR DIMENSIONS ARE LOCALIZED HORIZONTAL DISTANCES
VERTICAL DATUM USED IS NAVD 88

BL-1	N 592649.6195	E 950350.1537	EL 2115.56
BL-2	N 592895.8165	E 950371.5628	EL 2115.84
BL-3	N 593170.9790	E 950442.4101	EL 2121.79

NOTE:
INCIDENTAL MILL APPROX 25 FT AT EACH TIE IN TO PROVIDE A SMOOTH TRANSITION TO THE EXISTNG ASPHALT PAVEMENT

-L- CURVE DATA
PI Sta 12+12.20
Δ = 8° 12' 43.6" (RT)
D = 5° 43' 46.5"
L = 143.33'
T = 71.79'
R = 1,000.00'

DETAIL B
SPECIAL CUT BASE DITCH
(Not to Scale)

Natural Ground, 2:1, D, B, 2:1 or Flatter, Front Ditch Slope

Min. D = 1 Ft.
B = 2 Ft.

FROM -L- STA. 12+50 TO STA. 14+25 LT.

CULVERT HYDRAULIC DATA

DESIGN DISCHARGE	= 19	CFS
DESIGN FREQUENCY	= 25	YRS
DESIGN HW ELEVATION	= 2112.8	FT
BASE DISCHARGE	= 30	CFS
BASE FREQUENCY	= 100	YRS
BASE HW ELEVATION	= 2113.6	FT
OVERTOPPING DISCHARGE	= 40	CFS
OVERTOPPING FREQUENCY	= 100 +	YRS
OVERTOPPING ELEVATION	= 2114.5	FT

BRIDGE HYDRAULIC DATA

DESIGN DISCHARGE	= 750	CFS
DESIGN FREQUENCY	= 25	YRS
DESIGN HW ELEVATION	= 2112.7	FT
BASE DISCHARGE	= 1240	CFS
BASE FREQUENCY	= 100	YRS
BASE HW ELEVATION	= 2114.30	FT
OVERTOPPING DISCHARGE	= 1835	CFS
OVERTOPPING FREQUENCY	= 500+	YRS
OVERTOPPING ELEVATION	= 2115.9	FT
NWS	= 2108.0	FT
DATE OF SURVEY	= 1-29-13	
W.S.ELEVATION AT DATE OF SURVEY	= 2107.1	FT

REVISIONS

1. CHANGED OWNER NAME ON PARCEL 3 (4/10/14) RMS

8/17/99

STATE OF NORTH CAROLINA
DIVISION OF HIGHWAYS

TRANSPORTATION MANAGEMENT PLAN

HENDERSON COUNTY

DIVISION 14

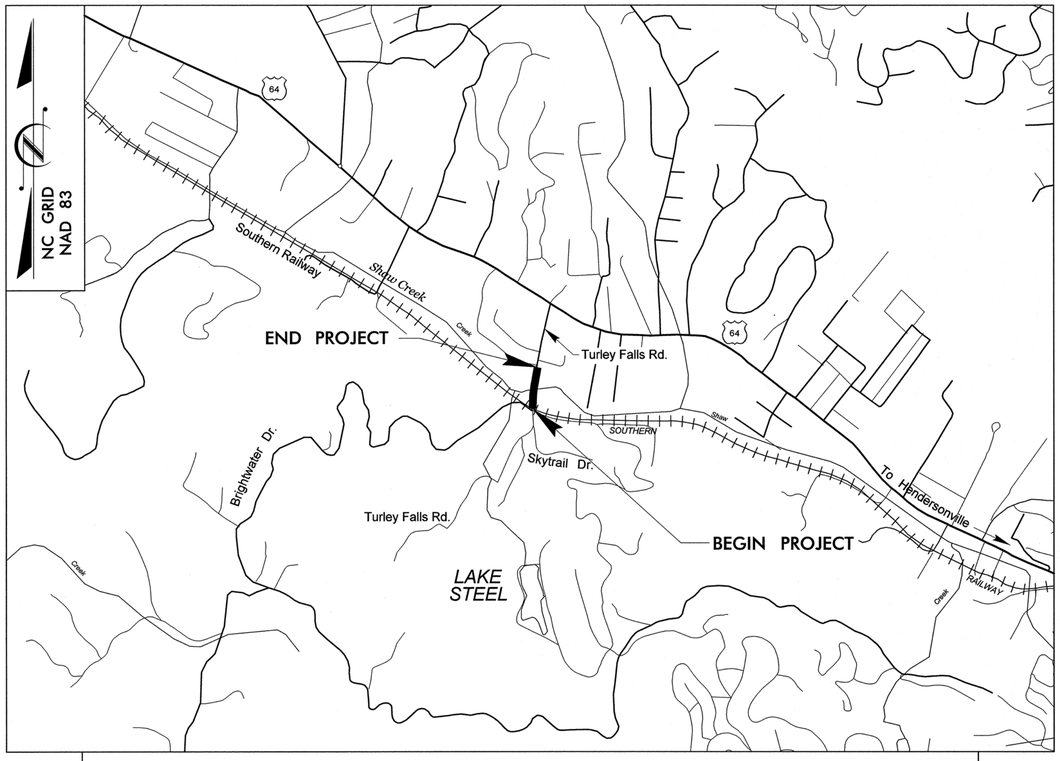

VICINITY MAP

INDEX OF SHEETS

SHEET NO.	TITLE
TMP-1	TITLE SHEET AND INDEX OF SHEETS
TMP-1A	ROADWAY STANDARD DRAWINGS AND LEGEND
TMP-2	PROJECT NOTES
TMP-3	PHASING
TMP-4	PHASE I DETAIL
TMP-5	PHASE II DETAIL

SHEET NO.
TMP-1

TIP PROJECT: 17BP.14.R.132

V&M
Vaughn & Melton
Consulting Engineers

Asheville, North Carolina 828-253-2796
Charlotte, North Carolina 704-357-0488
Tri-Cities, Tennessee 423-467-8401
Knoxville, Tennessee 865-546-5800
Middlesboro, Kentucky 606-248-6600
Spartanburg, South Carolina 864-574-4775

Copyright © 2006 Vaughn & Melton, Inc.
All Rights Reserved

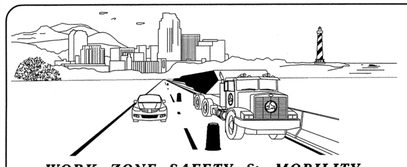

WORK ZONE SAFETY & MOBILITY
"from the MOUNTAINS to the COAST"

N.C.D.O.T. WORK ZONE TRAFFIC CONTROL
1561 MAIL SERVICE CENTER (MSC) RALEIGH, NC 27699-1561
750 N. GREENFIELD PARKWAY, GARNER, NC 27529 (DELIVERY)
PHONE: (919) 773-2800 FAX: (919) 771-2745

J. S. BOURNE, P.E. STATE TRAFFIC MANAGEMENT ENGINEER

_____ TRAFFIC CONTROL PROJECT ENGINEER

_____ TRAFFIC CONTROL PROJECT DESIGN ENGINEER

_____ TRAFFIC CONTROL DESIGN ENGINEER

DIVISION OF HIGHWAYS
STATE OF NORTH CAROLINA
DEPARTMENT OF TRANSPORTATION
WORK ZONE TRAFFIC CONTROL

STV / Ralph Whitehead Associates, Inc.
900 West Trade St., Ste. 715
Charlotte, NC 28202
NC License Number F-0991

PROJECT ENGINEER NIKKI T. HONEYCUTT, PE
DESIGN ENGINEER GERALD H. McCAULEY, PE

APPROVED: Gerald H. McCauley
DATE: 5/7/2014

NORTH CAROLINA PROFESSIONAL SEAL 13008 ENGINEER GERALD H. McCAULEY

5/7/2014
R:\Traffic\TrafficControl\TCP\B05114Y_TCP_TSH.dgn
wrightsp

ROADWAY STANDARD DRAWINGS

THE FOLLOWING ROADWAY STANDARDS AS SHOWN IN "ROADWAY STANDARD DRAWINGS" - PROJECT SERVICES UNIT - N.C. DEPARTMENT OF TRANSPORTATION - RALEIGH, N.C., DATED JAN 2012 ARE APPLICABLE TO THIS PROJECT AND BY REFERENCE HEREBY ARE CONSIDERED A PART OF THESE PLANS:

STD.NO.	TITLE
1101.01	WORK ZONE ADVANCE WARNING SIGNS
1101.02	TEMPORARY LANE CLOSURES
1101.04	TEMPORARY SHOULDER CLOSURES
1101.05	WORK ZONE VEHICLE ACCESSES
1101.11	TRAFFIC CONTROL DESIGN TABLES
1110.01	STATIONARY WORK ZONE SIGNS
1110.02	PORTABLE WORK ZONE SIGNS
1115.01	FLASHING ARROW BOARDS
1130.01	DRUM
1135.01	CONES
1145.01	BARRICADES - TYPE III
1150.01	FLAGGING DEVICES
1180.01	SKINNY DRUM
1205.01	PAVEMENT MARKINGS - LINE TYPES & OFFSETS
1205.04	PAVEMENT MARKINGS - INTERSECTIONS
1205.08	PAVEMENT MARKINGS - SYMBOLS & WORD MESSAGES
1205.12	PAVEMENT MARKINGS - BRIDGES
1261.01	GUARDRAIL & BARRIER DELINEATOR SPACING
1261.02	GUARDRAIL & BARRIER DELINEATOR TYPES AND MOUNTING
1262.01	GUARDRAIL END DELINEATION

LEGEND

GENERAL

DIRECTION OF TRAFFIC FLOW

DIRECTION OF PEDESTRIAN TRAFFIC FLOW

EXIST. PVMT.

NORTH ARROW

PROPOSED PVMT.

WORK AREA

REMOVAL/BREAKING OF PAVEMENT

TEMPORARY PAVEMENT

TEMPORARY PAVEMENT MARKING

PAINT 24"

P2 WHITE STOPBAR

TRAFFIC CONTROL DEVICES

BARRICADE (TYPE III)

CONE

DRUM SKINNY DRUM TUBULAR MARKER

TEMPORARY CRASH CUSHION

FLASHING ARROW PANEL (TYPE C)

FLAGGER

LAW ENFORCEMENT

TRUCK MOUNTED IMPACT ATTENUATOR (TMIA)

CHANGEABLE MESSAGE SIGN

TEMPORARY SIGNING

PORTABLE SIGN

STATIONARY SIGN

STATIONARY OR PORTABLE SIGN

SIGNALS

EXISTING PROPOSED TEMPORARY PORTABLE TRAFFIC SIGNAL

PAVEMENT MARKINGS

EXISTING LINES

TEMPORARY LINES

PAVEMENT MARKERS

CRYSTAL/CRYSTAL

CRYSTAL/RED

YELLOW/YELLOW

PAVEMENT MARKING SYMBOLS

PAVEMENT MARKING SYMBOLS

PROJ. REFERENCE NO.	SHEET NO.
17BP.14.R.132	TMP-1A

STV/Ralph Whitehead Associates, Inc.
900 West Trade St., Ste. 715
Charlotte, NC 28202
NC License Number F-0991

V&M Vaughn & Melton Consulting Engineers
Charlotte, North Carolina 704-357-0488
Tri-Cities, Tennessee 423-467-8401
Knoxville, Tennessee 865-546-5800
Asheville, North Carolina 828-253-2796
Middlesboro, Kentucky 606-248-6600
Spartanburg, South Carolina 864-574-4775

Copyright © 2006 Vaughn & Melton, Inc. All Rights Reserved

APPROVED: Gerald H. McCauley DATE: 5/7/14

NORTH CAROLINA PROFESSIONAL SEAL 13008 ENGINEER GERALD H. McCAULEY

DIVISION OF HIGHWAYS STATE OF NORTH CAROLINA DEPARTMENT OF TRANSPORTATION WORK ZONE TRAFFIC CONTROL

ROADWAY STANDARD DRAWINGS & LEGEND

5/7/2014
R:\Traffic\TrafficControl\TCP\BD5ll4Y_TCP_1A.dgn
wrlghtep

PROJ. REFERENCE NO.	SHEET NO.
17BP.14.R.132	TMP-2

STV / Ralph Whitehead Associates, Inc.
900 West Trade St., Ste. 715
Charlotte, NC 28202
NC License Number F-0991

PROJECT NOTES

GENERAL NOTES

CHANGES MAY BE REQUIRED WHEN PHYSICAL DIMENSIONS IN THE DETAIL DRAWINGS, STANDARD DETAILS, AND ROADWAY DETAILS ARE NOT ATTAINABLE TO MEET FIELD CONDITIONS OR RESULT IN DUPLICATE OR UNDESIRED OVERLAPPING OF DEVICES. MODIFICATION MAY INCLUDE: MOVING, SUPPLEMENTING, COVERING, OR REMOVAL OF DEVICES AS DIRECTED BY THE ENGINEER.

THE FOLLOWING GENERAL NOTES APPLY AT ALL TIMES FOR THE DURATION OF THE CONSTRUCTION PROJECT EXCEPT WHEN OTHERWISE NOTED IN THE PLAN OR DIRECTED BY THE ENGINEER.

LANE AND SHOULDER CLOSURE REQUIREMENTS

A) REMOVE LANE CLOSURE DEVICES FROM THE LANE WHEN WORK IS NOT BEING PERFORMED BEHIND THE LANE CLOSURE OR WHEN A LANE CLOSURE IS NO LONGER NEEDED OR AS DIRECTED BY THE ENGINEER.

B) WHEN PERSONNEL AND/OR EQUIPMENT ARE WORKING WITHIN 15 FT OF AN OPEN TRAVEL LANE, CLOSE THE NEAREST OPEN SHOULDER USING ROADWAY STANDARD DRAWING NO. 1101.04 UNLESS THE WORK AREA IS PROTECTED BY BARRIER OR GUARDRAIL OR A LANE CLOSURE IS INSTALLED.

C) WHEN PERSONNEL AND/OR EQUIPMENT ARE WORKING ON THE SHOULDER ADJACENT TO AN UNDIVIDED FACILITY AND WITHIN 5 FT OF AN OPEN TRAVEL LANE, CLOSE THE NEAREST OPEN TRAVEL LANE USING ROADWAY STANDARD DRAWING NO. 1101.02 UNLESS THE WORK AREA IS PROTECTED BY BARRIER OR GUARDRAIL.

WHEN PERSONNEL AND/OR EQUIPMENT ARE WORKING ON THE SHOULDER ADJACENT TO A DIVIDED FACILITY AND WITHIN 10 FT OF AN OPEN TRAVEL LANE, CLOSE THE NEAREST OPEN TRAVEL LANE USING ROADWAY STANDARD DRAWING NO. 1101.02 UNLESS THE WORK AREA IS PROTECTED BY BARRIER OR GUARDRAIL.

D) WHEN PERSONNEL AND/OR EQUIPMENT ARE WORKING WITHIN A LANE OF TRAVEL OF AN UNDIVIDED OR DIVIDED FACILITY, CLOSE THE LANE ACCORDING TO THE TRAFFIC CONTROL PLANS, ROADWAY STANDARD DRAWINGS, OR AS DIRECTED BY THE ENGINEER. CONDUCT THE WORK SO THAT ALL PERSONNEL AND/OR EQUIPMENT REMAIN WITHIN THE CLOSED TRAVEL LANE.

E) DO NOT WORK SIMULTANEOUSLY WITHIN 15 FT ON BOTH SIDES OF AN OPEN TRAVELWAY, RAMP, OR LOOP WITHIN THE SAME LOCATION UNLESS PROTECTED WITH GUARDRAIL OR BARRIER.

PAVEMENT EDGE DROP OFF REQUIREMENTS

F) BACKFILL AT A 6:1 SLOPE UP TO THE EDGE AND ELEVATION OF EXISTING PAVEMENT IN AREAS ADJACENT TO AN OPENED TRAVEL LANE THAT HAS AN EDGE OF PAVEMENT DROP-OFF AS FOLLOWS:

BACKFILL DROP-OFFS THAT EXCEED 2 INCHES ON ROADWAYS WITH POSTED SPEED LIMITS OF 45 MPH OR GREATER.

BACKFILL DROP-OFFS THAT EXCEED 3 INCHES ON ROADWAYS WITH POSTED SPEED LIMITS LESS THAN 45 MPH.

BACKFILL WITH SUITABLE COMPACTED MATERIAL, AS APPROVED BY THE ENGINEER, AT NO EXPENSE TO THE DEPARTMENT.

G) DO NOT EXCEED A DIFFERENCE OF 2 INCHES IN ELEVATION BETWEEN OPEN LANES OF TRAFFIC FOR NOMINAL LIFTS OF 1.5 INCHES. INSTALL ADVANCE WARNING "UNEVEN LANES" SIGNS (W8-11) 350 ft IN ADVANCE AND A MINIMUM OF EVERY HALF MILE THROUGHOUT THE UNEVEN AREA.

TRAFFIC PATTERN ALTERATIONS

H) NOTIFY THE ENGINEER TWENTY ONE (21) CALENDAR DAYS PRIOR TO ANY TRAFFIC PATTERN ALTERATION.

SIGNING

I) INSTALL ADVANCE WORK ZONE WARNING SIGNS WHEN WORK IS WITHIN 40 FT FROM THE EDGE OF TRAVEL LANE AND NO MORE THAN THREE (3) DAYS PRIOR TO THE BEGINNING OF CONSTRUCTION.

J) ENSURE ALL NECESSARY SIGNING IS IN PLACE PRIOR TO ALTERING ANY TRAFFIC PATTERN.

TRAFFIC CONTROL DEVICES

K) WHEN LANE CLOSURES ARE NOT IN EFFECT SPACE CHANNELIZING DEVICES IN WORK AREAS NO GREATER IN FEET THAN TWICE THE POSTED SPEED LIMIT (MPH) EXCEPT, 10 FT ON-CENTER IN RADII, AND 3 FT OFF THE EDGE OF AN OPEN TRAVELWAY. REFER TO STANDARD SPECIFICATIONS FOR ROADS AND STRUCTURES SECTIONS 1130 (DRUMS), 1135 (CONES) AND 1180 (SKINNY DRUMS) FOR ADDITIONAL REQUIREMENTS.

L) PLACE ADDITIONAL SETS OF THREE CHANNELIZING DEVICES PERPENDICULAR TO THE EDGE OF TRAVELWAY ON 500 FT CENTERS WHEN OPENED LANES ARE CLOSED TO TRAFFIC.

PAVEMENT MARKINGS AND MARKERS

M) INSTALL TEMPORARY PAVEMENT MARKINGS AND TEMPORARY PAVEMENT MARKERS ON INTERIM LAYERS OF PAVEMENT AS FOLLOWS:

ROAD NAME	MARKING	MARKER
SR 1215 - TURLEY FALLS ROAD (-L-)	PAINT	NONE

N) PLACE ONE APPLICATION OF PAINT FOR TEMPORARY TRAFFIC PATTERNS. PLACE A SECOND APPLICATION OF PAINT SIX (6) MONTHS AFTER THE INITIAL APPLICATION AND EVERY SIX MONTHS AS DIRECTED BY THE ENGINEER.

O) TIE PROPOSED PAVEMENT MARKING LINES TO EXISTING PAVEMENT MARKING LINES.

P) REMOVE/REPLACE ANY CONFLICTING/DAMAGED PAVEMENT MARKINGS AND MARKERS BY THE END OF EACH DAY'S OPERATION.

MISCELLANEOUS

Q) IN THE EVENT A TIE-IN CANNOT BE MADE IN ONE DAY'S TIME, BRING THE TIE-IN AREA TO AN APPROPRIATE ROADWAY ELEVATION AS DETERMINED BY THE ENGINEER. PLACE BLACK ON ORANGE "LOOSE GRAVEL" SIGNS (W8-7) AND BLACK ON ORANGE "PAVEMENT ENDS" SIGNS (W8-3) 100 FT AND 200 FT RESPECTIVELY IN ADVANCE OF THE UNEVEN AREAS. USE DRUMS TO DELINEATE THE EDGE OF ROADWAY ALONG UNPAVED AREAS.

LOCAL NOTES

1. CONTACT HENDERSON COUNTY EMERGENCY SERVICES AND SCHOOLS AT LEAST ONE MONTH PRIOR TO CONSTRUCTION.
2. THE CONTRACTOR SHALL BUILD AS MUCH AS POSSIBLE AWAY FROM TRAFFIC.

MANAGEMENT STRATEGIES

TRAFFIC WILL BE MAINTAINED ON THE EXISTING ROAD BUT REDUCED TO ONE LANE USING TEMPORARY SIGNALS AND PAVEMENT MARKINGS AS THE NEW ALIGNMENT IS CONSTRUCTED.
PHASE 2 SHOWS TRAFFIC SHIFTED TO ONE LANE ON THE NEW ALIGNMENT USING TEMPORARY SIGNALS AND PAVEMENT MARKINGS WHILE THE REMAINDER IS CONSTRUCTED. A FLAGGING OPERATION WILL BE USED TO CONSTRUCT THE NEW TIE-INS.

V&M
Vaughn & Melton
Consulting Engineers
Asheville, North Carolina 828-253-2796
Charlotte, North Carolina 704-357-0488
Tri-Cities, Tennessee 423-467-8401
Knoxville, Tennessee 865-546-5800
Middlesboro, Kentucky 606-248-6600
Spartanburg, South Carolina 864-574-4775

Copyright © 2006 Vaughn & Melton, Inc.
All Rights Reserved

APPROVED: Gerald H. McCauley DATE: 5/7/14

NORTH CAROLINA PROFESSIONAL SEAL 13008 ENGINEER GERALD H. McCAULEY

DIVISION OF HIGHWAYS · STATE OF NORTH CAROLINA · DEPARTMENT OF TRANSPORTATION · WORK ZONE TRAFFIC CONTROL UNIT

PROJECT NOTES

5/7/2014
R:\Traffic\TrafficControl\TCP\BD5114Y_TCP_2.dgn
wrigntep

PROJ. REFERENCE NO.	SHEET NO.
17BP.14.R.132	TMP-3

STV / Ralph Whitehead Associates, Inc.
900 West Trade St., Ste. 715
Charlotte, NC 28202
NC License Number F-0391

PROJECT PHASING

PHASE I

STEP 1: INSTALL ADVANCED WORK ZONE WARNING SIGNS IN ACCORDANCE TO NCDOT RSD. 1101.01 SHEET 3 OF 3.

STEP 2: USING NCDOT RSD. 1101.02 SHEET 1 OF 15, INSTALL PORTABLE TRAFFIC SIGNALS AS REQUIRED IN THE SIGNAL PLANS. INSTALL SIGNING,TEMPORARY PAVEMENT MARKINGS, TEMPORARY GUARDRAIL, AND DRUMS AS SHOWN ON SHEET TMP-4. ONCE SIGNS AND DEVICES ARE IN PLACE, ACTIVATE PORTABLE TRAFFIC SIGNALS; AND PLACE TRAFFIC INTO A ONE-LANE, TWO-WAY OPERATION.

STEP 3: REMOVE EXISTING LEFT SIDE BRIDGE RAIL AND SAWCUT AND REMOVE LEFT SIDE OF EXISTING BRIDGE AS SHOWN IN SECTION B-B ON SHEET TMP-4. INSTALL TEMPORARY SHORING NO. 1 AND NO. 2 AS SHOWN ON SHEET TMP-4.

STEP 4: CONSTRUCT LEFT SIDE OF -L- (SR 1215 TURLEY FALLS RD.) FROM STA. 10+15± TO 14+00, UP TO BUT NOT INCLUDING, FINAL LAYER OF SURFACE COURSE, SEE SHEET TMP-4.

PHASE II

STEP 1: USING NCDOT RSD. 1101.02 SHEET 1 OF 15, REMOVE GUARDRAIL FROM PHASE I, INSTALL GUARDRAIL FOR PHASE II, SEE SHEET TMP-5

STEP 2: ACTIVATE PORTABLE TRAFFIC SIGNALS; AND PLACE TRAFFIC INTO A ONE-LANE, TWO-WAY TRAFFIC OPERATION ON THE LEFT SIDE COMPLETED IN PHASE I.

STEP 3: REMOVE RIGHT SIDE OF EXISTING STRUCTURE AND SHORING FROM PHASE I; SEE SHEET TMP-5.

STEP 4: CONSTRUCT RIGHT SIDE OF-L- (SR 1215 TURLEY FALLS RD.) FROM STA. 10+00 TO 14+00, UP TO BUT NOT INCLUDING, FINAL LAYER OF SURFACE COURSE. SEE SHEET TMP-5.

STEP 5: USING NCDOT RSD. 1101.02 SHEET 1 OF 15, REMOVE TEMPORARY GUARDRAIL, PLACE FINAL LAYER OF SURFACE COURSE, AND PAVEMENT MARKINGS ON -L- (SR 1215 TURLEY FALLS RD.).

STEP 6: ONCE ALL CONSTRUCTION IS COMPLETE, REMOVE ALL SIGNS AND DEVICES; AND PLACE TRAFFIC IN ITS FINAL PATTERN.

Vaughn & Melton
Consulting Engineers
Asheville, North Carolina 828-253-2796
Charlotte, North Carolina 704-357-0488
Tri-Cities, Tennessee 423-467-8401
Knoxville, Tennessee 865-546-5800
Middlesboro, Kentucky 606-248-6600
Spartanburg, South Carolina 864-574-4775
Copyright © 2006 Vaughn & Melton, Inc.
All Rights Reserved

APPROVED: Donald H. McCauley DATE: 5/7/14

NORTH CAROLINA PROFESSIONAL SEAL 13008 ENGINEER GERALD H. McCAULEY

DIVISION OF HIGHWAYS
STATE OF NORTH CAROLINA
DEPARTMENT OF TRANSPORTATION
WORK ZONE TRAFFIC CONTROL UNIT

PHASING

5/7/2014
R:\Traffic\TrafficControl\TCP\BD5114Y_TCP_3.dgn
wrightep

PROJ. REFERENCE NO.	SHEET NO.
17BP.14.R.132	TMP-4

STV / Ralph Whitehead Associates, Inc.
900 West Trade St., Ste. 715
Charlotte, NC 28202
NC License Number F-0991

SCALE 1" = 20'

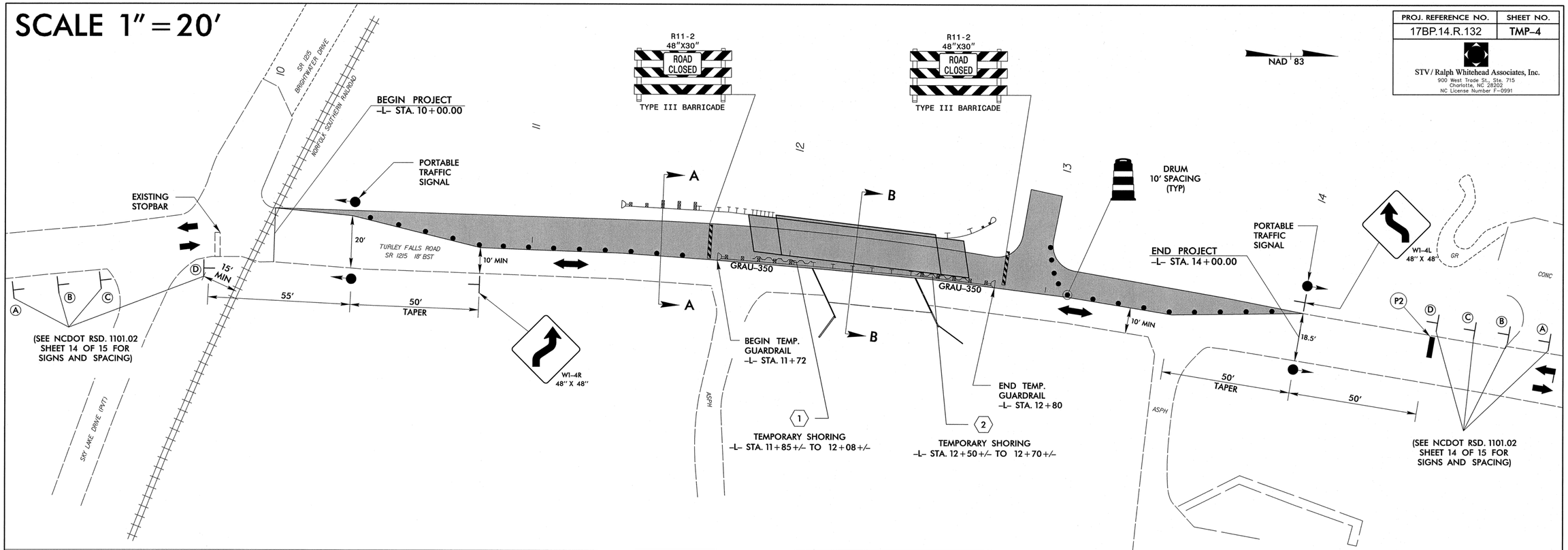

SECTION A-A

-L- STA. 11+50

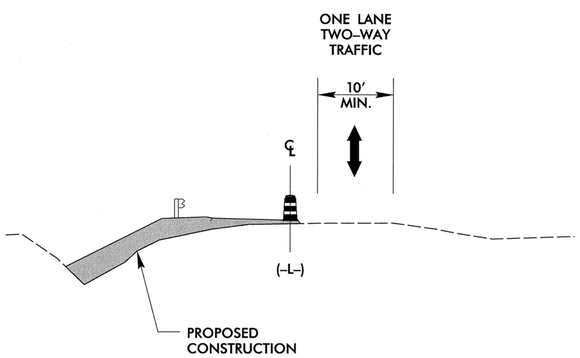

N.T.S

SECTION B-B

-L- STA. 12+25

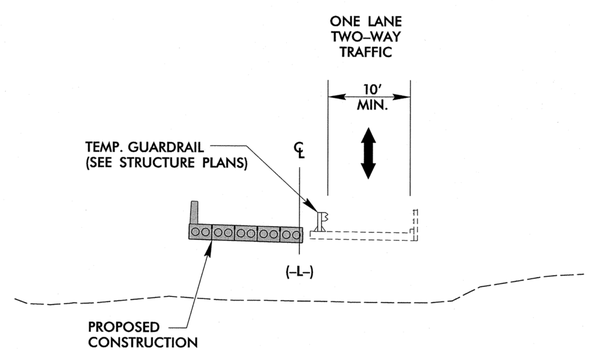

N.T.S

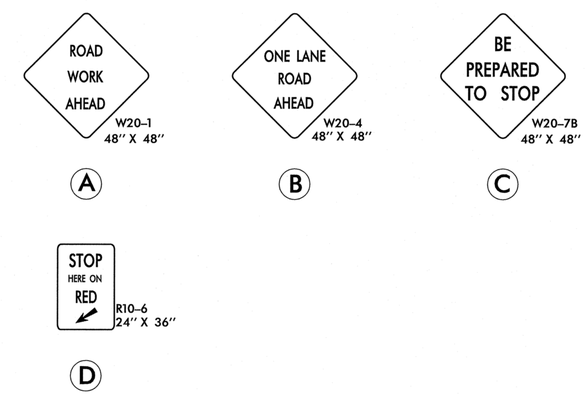

Vaughn & Melton
Consulting Engineers
Asheville, North Carolina 828-253-2796
Charlotte, North Carolina 704-357-0488
Tri-Cities, Tennessee 423-467-8401
Knoxville, Tennessee 865-546-5800
Middlesboro, Kentucky 606-248-6600
Spartanburg, South Carolina 864-574-4715
Copyright © 2006 Vaughn & Melton, Inc. All Rights Reserved

APPROVED: Donald H. McCauley DATE: 5/7/14

NORTH CAROLINA PROFESSIONAL SEAL 13008 ENGINEER GERALD H. McCAULEY

DIVISION OF HIGHWAYS · STATE OF NORTH CAROLINA · DEPARTMENT OF TRANSPORTATION · WORK ZONE TRAFFIC CONTROL UNIT

PHASE I DETAIL

5/7/2014
R:\Traffic\TrafficControl\TCP\BD5114Y_TCP_4.dgn
wrightep

PROJ. REFERENCE NO.	SHEET NO.
17BP.14.R.132	TMP-5

STV / Ralph Whitehead Associates, Inc.
900 West Trade St., Ste. 715
Charlotte, NC 28202
NC License Number F-0991

SCALE 1" = 20'

NAD 83

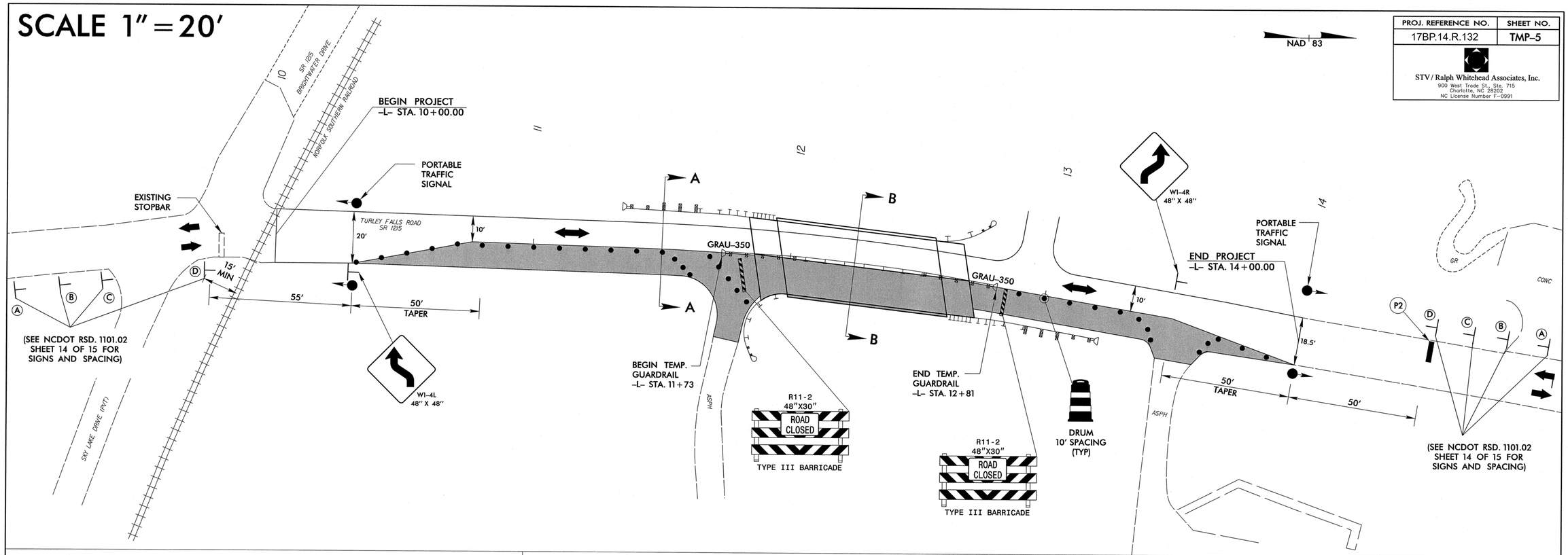

SECTION A-A

-L- STA. 11+50

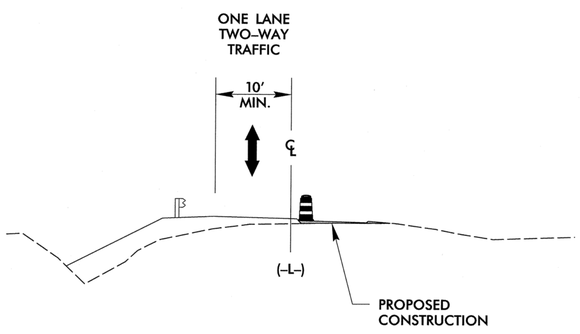

N.T.S

SECTION B-B

-L- STA. 12+25

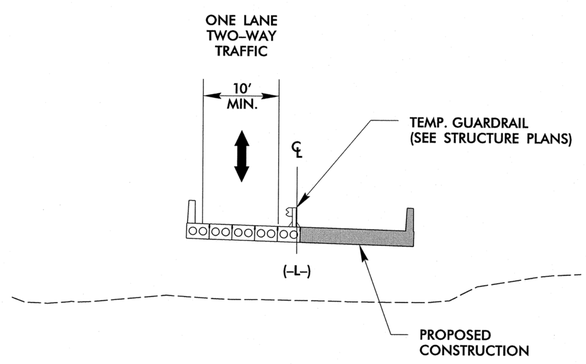

N.T.S

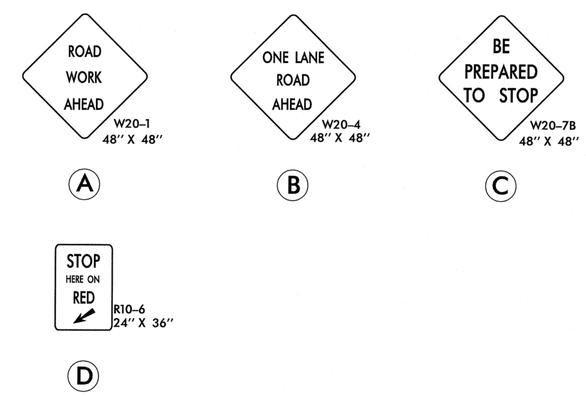

Vaughn & Melton
Consulting Engineers
Asheville, North Carolina 828-253-2796
Charlotte, North Carolina 704-357-0488
Tri-Cities, Tennessee 423-467-8401
Knoxville, Tennessee 865-546-5800
Middlesboro, Kentucky 606-248-6600
Spartanburg, South Carolina 864-574-4775

Copyright © 2006 Vaughn & Melton, Inc.
All Rights Reserved

APPROVED: Donald H. McCauley DATE: 5/7/14

NORTH CAROLINA PROFESSIONAL SEAL 13008 ENGINEER GERALD H. McCAULEY

DIVISION OF HIGHWAYS
STATE OF NORTH CAROLINA
DEPARTMENT OF TRANSPORTATION
WORK ZONE TRAFFIC CONTROL UNIT

PHASE II DETAIL

5/7/2014
R:\Traffic\TrafficControl\TCP\BD5114Y_TCP_5.dgn
wrightep

PROJ. REFERENCE NO.	SHEET NO.
17BP.14.R.132	PM-1

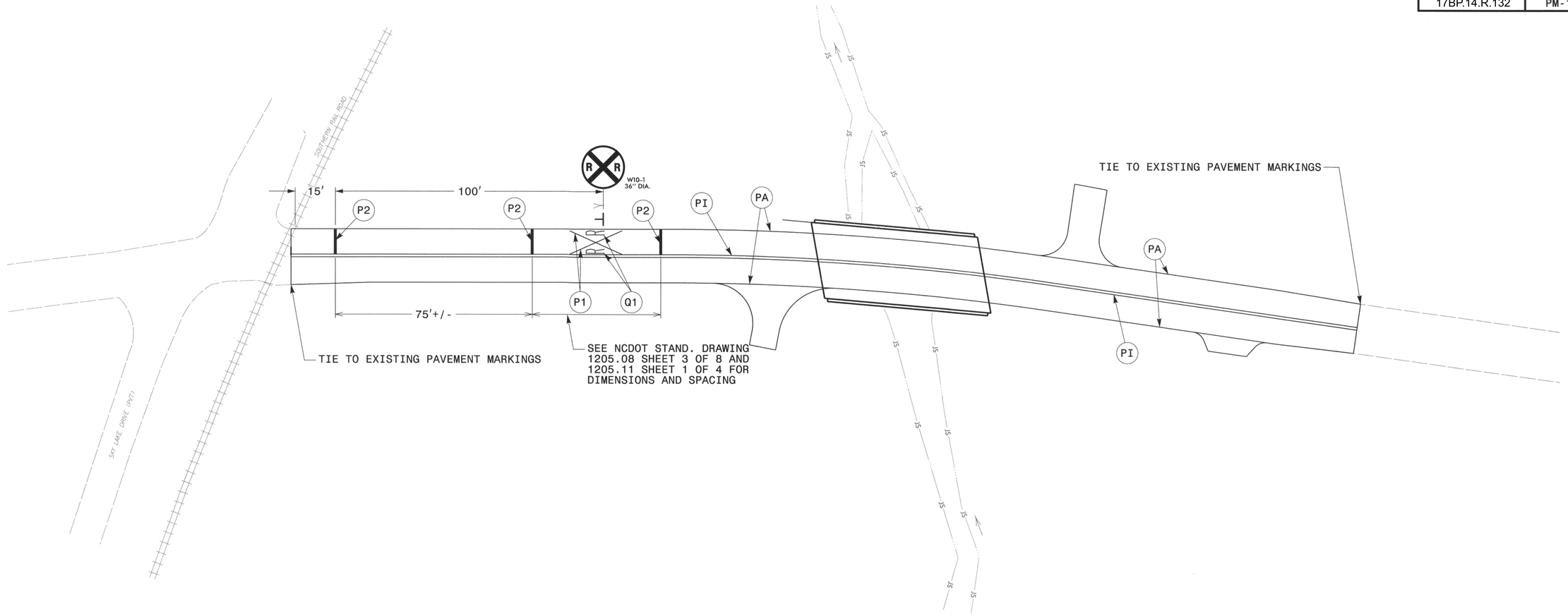

FINAL PAVEMENT MARKING SCHEDULE

SYMBOL	DESCRIPTION	QUANTITY BREAKDOWN	PAY ITEM	TOTAL QUANTITY
		PAVEMENT MARKING LINES		
P1	WHITE LINE, RR X (16")	44 FT	PAINT (16")	88 FT
P2	WHITE STOP BAR / WHITE TRANSVERSE BAND	30 FT	PAINT (24")	60 FT
PA	WHITE SOLID EDGE LINE	800 FT	PAINT (4")	1600 FT
PI	YELLOW DOUBLE CENTER LINE	400 FT	PAINT (4")	1600 FT
Q1	ALPHANUMERICAL CHARACTER	2 EA	PAINT CHARACTER	4 EA

Vaughn & Melton
Consulting Engineers
Asheville, North Carolina 828-253-2796
Charlotte, North Carolina 704-357-8488
Tri-Cities, Tennessee 423-467-8401
865-546-5800
Middlesboro, Kentucky 606-248-6600
Spartanburg, South Carolina 864-574-4775

Copyright © 2006 Vaughn & Melton, Inc. All Rights Reserved

APPROVED: DATE: 5/7/2014

SEAL

NORTH CAROLINA PROFESSIONAL SEAL 20119 ENGINEER LLOYD D. BROWN

DIVISION OF HIGHWAYS · STATE OF NORTH CAROLINA · DEPARTMENT OF TRANSPORTATION · WORK ZONE TRAFFIC CONTROL

TRANSPORTATION OPERATIONS PLAN

$$$$$$$$$$SYSTIME$$$$$$$$$$
$$$$$$$$$$SUBTRAME$$$$$$$$$$

PROJECT REFERENCE NO.	SHEET NO.
17BP.14.R.132	SIG. 1

PHASING DIAGRAM

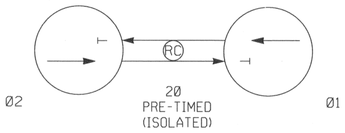

PHASING DIAGRAM DETECTION LEGEND

- DETECTED MOVEMENT
- UNDETECTED MOVEMENT (OVERLAP)
- UNSIGNALIZED MOVEMENT
- PEDESTRIAN MOVEMENT

TABLE OF OPERATION

SIGNAL FACE	Ø2 R/W	Ø2 CLEAR Ø1 1	Ø2 CLEAR Ø1 2	Ø1 R/W	Ø1 CLEAR Ø2 1	Ø1 CLEAR Ø2 2	FLASH
11,12	R	R	R	G	Y	R	R
21,22	G	Y	R	R	R	R	R

SIGNAL FACE I.D.

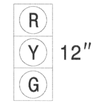

11, 12
21, 22

NOTES

1. PORTABLE TEMPORARY INSTALLATION.
2. SIGNAL HEADS SHALL BE NO CLOSER THAN 40 FEET FROM THE STOPLINE.
3. NO COUNTS AVAILABLE.
4. CONTRACTOR TO UTILIZE NCDOT PRE-APPROVED PORTABLE TRAFFIC SIGNAL MANUFACTURER AND MODEL.

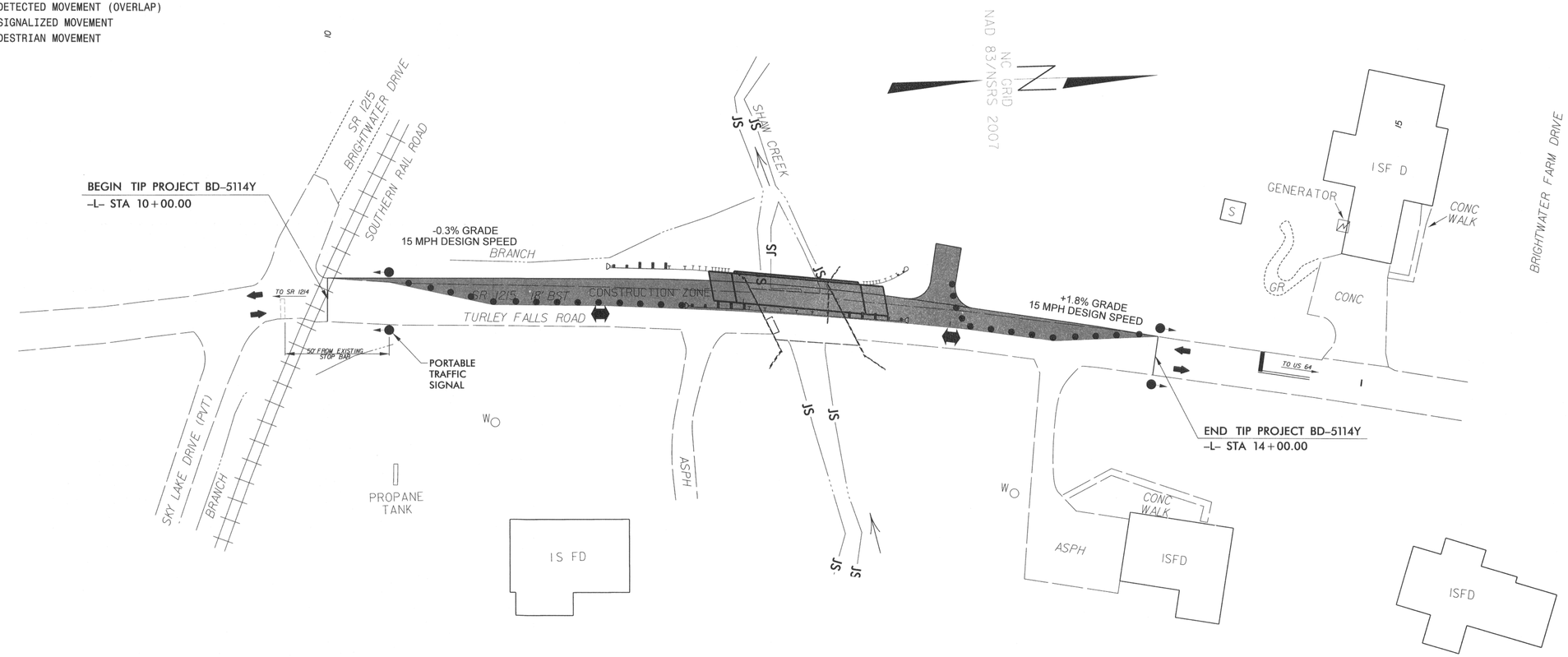

TIMING CHART
NEMA CONTROLLER

PHASE	Ø1	Ø2
MINIMUM GREEN	40 SEC.	40 SEC.
PASSAGE/GAP	0 SEC.	0 SEC.
YELLOW CHANGE INT.	4.0 SEC.	4.0 SEC.
RED CLEARANCE	20 SEC.	20 SEC.
MAX. 1	40 SEC.	40 SEC.
RECALL POSITION	MAX. RECALL	MAX. RECALL
VEHI. CALL MEMORY	–	–

Prepared in the Offices of:

V&M Vaughn & Melton Consulting Engineers

Charlotte, North Carolina 704-357-0486
Tri-Cities, Tennessee 423-467-940
Knoxville, Tennessee 865-546-5800
Middlesboro, Kentucky 606-248-5600
Spartanburg, South Carolina 864-574-4775
Asheville, North Carolina 828-253-2796

Copyright © 2006 Vaughn & Melton, Inc. All Rights Reserved

SCALE 0 30

PORTABLE TRAFFIC SIGNAL PLAN
SR 1215 TURKEY FALLS ROAD

DIV. 14 HENDERSON COUNTY

PLAN DATE: 5/5/14	REVIEWED BY: ACC
PREPARED BY: JDD	REVIEWED BY:

REVISIONS	INIT.	DATE

SEAL

NORTH CAROLINA PROFESSIONAL SEAL 20119 ENGINEER LLOYD D. BROWN

SIGNATURE 5/7/2014 DATE

SIG. INVENTORY NO.

$$$$SYSTIME$$$$
$$$$DATE$$$$
$$$$USERNAME$$$$

PROJECT REFERENCE NO.	SHEET NO.
17BP.14.R.132	EC-1

EROSION CONTROL PLAN

KEVIN B. ALFORD, PE
LEVEL IIIA NAME

396
LEVEL IIIA CERTIFICATION NO.

THESE EROSION AND SEDIMENT CONTROL PLANS COMPLY WITH THE REGULATIONS SET FORTH BY THE NCG-010000 GENERAL CONSTRUCTION PERMIT EFFECTIVE AUGUST 3, 2011 ISSUED BY THE NORTH CAROLINA DEPARTMENT OF ENVIRONMENT AND NATURAL RESOURCES DIVISION OF WATER QUALITY.

CLEARING AND GRUBBING EROSION CONTROL FOR CONSTRUCTION SHEET 4

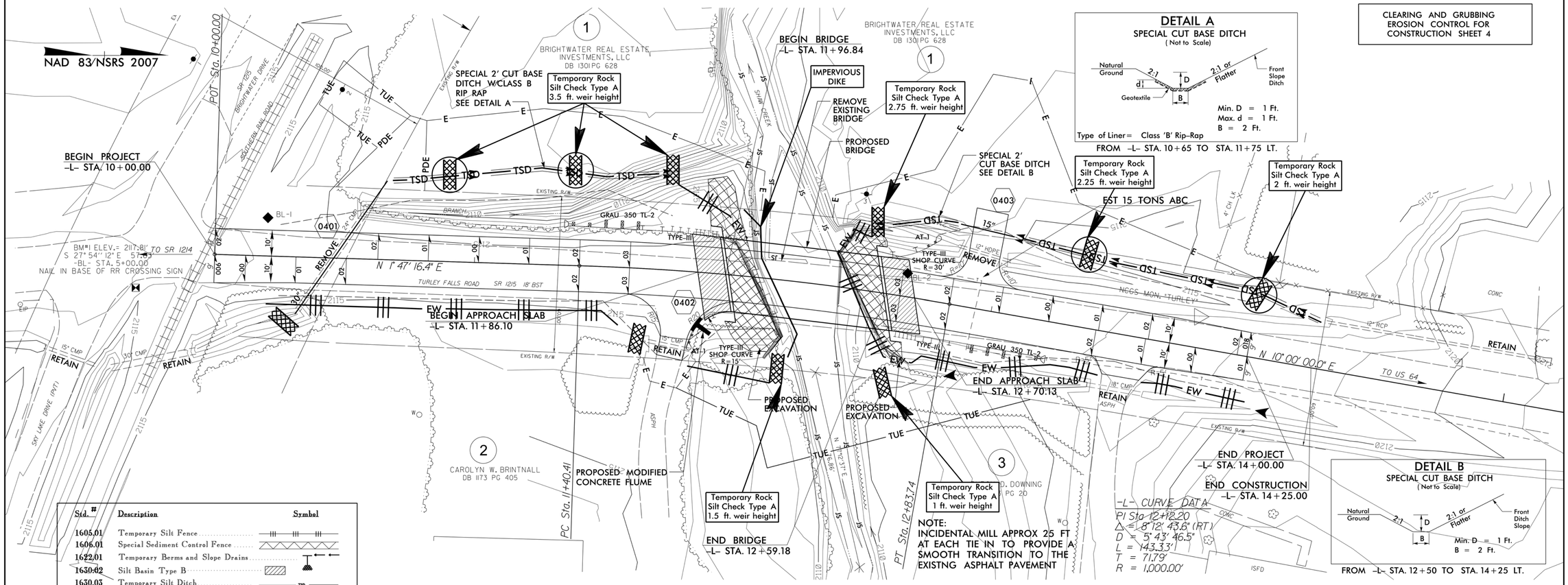

Std. #	Description	Symbol
1605.01	Temporary Silt Fence	
1606.01	Special Sediment Control Fence	
1622.01	Temporary Berms and Slope Drains	
1630.02	Silt Basin Type B	
1630.03	Temporary Silt Ditch	TSD
1630.05	Temporary Diversion	TD
1630.06	Special Stilling Basin	
1632.03	Rock Inlet Sediment Trap Type C	
1633.01	Temporary Rock Silt Check Type-A	
	Temporary Rock Silt Check Type-A with Matting and Polyacrylamide (PAM)	
1633.02	Temporary Rock Silt Check Type-B	
	Silt Fence Excelsior Wattle Break	EW
	Wattle with Polyacrylamide (PAM)	
1634.01	Temporary Rock Sediment Dam Type-A	
1635.01	Rock Pipe Inlet Sediment Trap Type-A	
	Earthen Dam With Skimmer	

2012 STANDARD DRAWINGS

1604.01	Railroad Erosion Control Detail	1632.01	Rock Inlet Sediment Trap Type A
1605.01	Temporary Silt Fence	1632.02	Rock Inlet Sediment Trap Type B
1606.01	Special Sediment Control Fence	1632.03	Rock Inlet Sediment Trap Type C
1607.01	Gravel Construction Entrance	1633.01	Temporary Rock Silt Check Type A
1622.01	Temporary Berms and Slope Drains	1633.02	Temporary Rock Silt Check Type B
1630.01	Riser Basin	1634.01	Temporary Rock Sediment Dam Type A
1630.02	Silt Basin Type B	1634.02	Temporary Rock Sediment Dam Type B
1630.03	Temporary Silt Ditch	1635.01	Rock Pipe Inlet Sediment Trap Type A
1630.04	Stilling Basin	1635.02	Rock Pipe Inlet Sediment Trap Type B
1630.05	Temporary Diversion	1640.01	Coir Fiber Baffle
1630.06	Special Stilling Basin	1645.01	Temporary Stream Crossing
1631.01	Matting Installation		

NOTES: ANY DEVIATION FROM OPTIONS GIVEN WILL REQUIRE PRIOR APPROVAL BY ENGINEER.

ADDITIONAL EROSION CONTROL DEVICES MAY NEED TO BE INSTALLED AS DIRECTED BY THE ENGINEER.

ROADSIDE ENVIRONMENTAL UNIT
DEPARTMENT OF TRANSPORTATION
DIVISION OF HIGHWAYS
RALEIGH, N.C.

2012 STANDARD SPECIFICATIONS

REVISIONS

8/17/93

1:48:52 PM
5/20/2013
11/18/2013

bridge = 135_Henderson_Vaughn & Melton\Erosion Control\bd5114y_ec_psh.dgn

PROJECT REFERENCE NO.	SHEET NO.
17BP.14.R.132	EC-1A

EROSION CONTROL PLAN

KEVIN B. ALFORD, PE
LEVEL IIIA NAME

396
LEVEL IIIA CERTIFICATION NO.

THESE EROSION AND SEDIMENT CONTROL PLANS COMPLY WITH THE REGULATIONS SET FORTH BY THE NCG-010000 GENERAL CONSTRUCTION PERMIT EFFECTIVE AUGUST 3, 2011 ISSUED BY THE NORTH CAROLINA DEPARTMENT OF ENVIRONMENT AND NATURAL RESOURCES DIVISION OF WATER QUALITY.

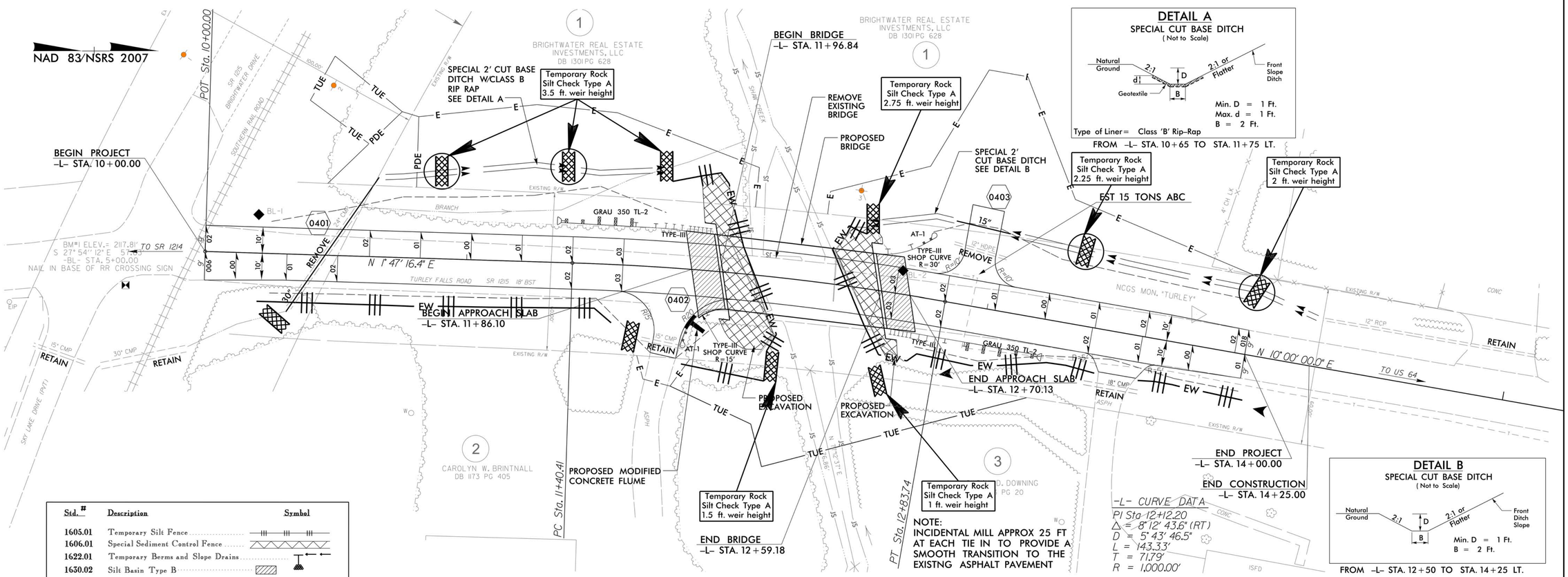

Std. #	Description	Symbol
1605.01	Temporary Silt Fence	
1606.01	Special Sediment Control Fence	
1622.01	Temporary Berms and Slope Drains	
1630.02	Silt Basin Type B	
1630.03	Temporary Silt Ditch	TSD
1630.05	Temporary Diversion	TD
1630.06	Special Stilling Basin	
1632.03	Rock Inlet Sediment Trap Type C	
1633.01	Temporary Rock Silt Check Type-A	
	Temporary Rock Silt Check Type-A with Matting and Polyacrylamide (PAM)	
1633.02	Temporary Rock Silt Check Type-B	
	Silt Fence Excelsior Wattle Break	EW
	Wattle with Polyacrylamide (PAM)	
1634.01	Temporary Rock Sediment Dam Type-A	
1635.01	Rock Pipe Inlet Sediment Trap Type-A	
	Earthen Dam With Skimmer	

2012 STANDARD DRAWINGS

1604.01	Railroad Erosion Control Detail	1632.01	Rock Inlet Sediment Trap Type A
1605.01	Temporary Silt Fence	1632.02	Rock Inlet Sediment Trap Type B
1606.01	Special Sediment Control Fence	1632.03	Rock Inlet Sediment Trap Type C
1607.01	Gravel Construction Entrance	1633.01	Temporary Rock Silt Check Type A
1622.01	Temporary Berms and Slope Drains	1633.02	Temporary Rock Silt Check Type B
1630.01	Riser Basin	1634.01	Temporary Rock Sediment Dam Type A
1630.02	Silt Basin Type B	1634.02	Temporary Rock Sediment Dam Type B
1630.03	Temporary Silt Ditch	1635.01	Rock Pipe Inlet Sediment Trap Type A
1630.04	Stilling Basin	1635.02	Rock Pipe Inlet Sediment Trap Type B
1630.05	Temporary Diversion	1640.01	Coir Fiber Baffle
1630.06	Special Stilling Basin	1645.01	Temporary Stream Crossing
1631.01	Matting Installation		

NOTES: ANY DEVIATION FROM OPTIONS GIVEN WILL REQUIRE PRIOR APPROVAL BY ENGINEER.

ADDITIONAL EROSION CONTROL DEVICES MAY NEED TO BE INSTALLED AS DIRECTED BY THE ENGINEER.

ROADSIDE ENVIRONMENTAL UNIT
DEPARTMENT OF TRANSPORTATION
DIVISION OF HIGHWAYS
RALEIGH, N.C.

2012 STANDARD SPECIFICATIONS

REVISIONS

8/17/99

13941PM
5/20/13
11/18/2013

I:\Bridge # 135_Henderson_Vaughn & Melton\Erosion Control\bd5114y_ec_psh.dgn

PROJECT REFERENCE NO.	SHEET NO.
17BP.14.R.132	EC-2

TEMPORARY ROCK SILT CHECK TYPE 'A' WITH EXCELSIOR MATTING AND POLYACRYLAMIDE (PAM)

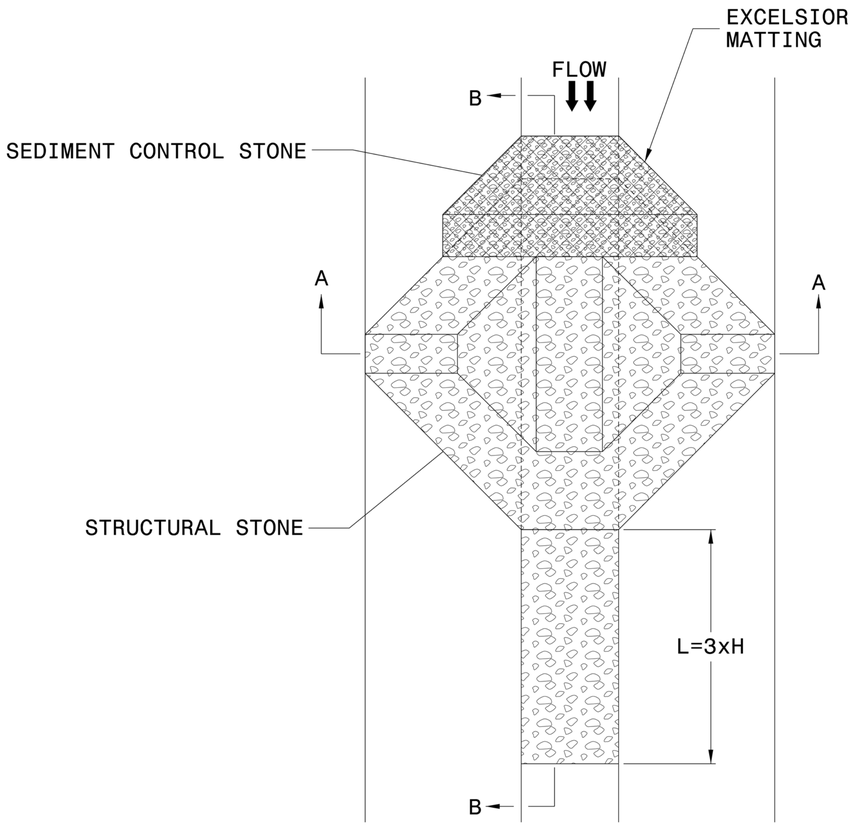

PLAN

NOTES

USE EXCELSIOR FOR MATTING MATERIAL AND ANCHOR MATTING SECTION AT TOP AND BOTTOM WITH CLASS B STONE.

PRIOR TO POLYACRYLAMIDE (PAM) APPLICATION, OBTAIN A SOIL SAMPLE FROM PROJECT LOCATION, AND FROM OFFSITE MATERIAL, AND ANALYZE FOR APPROPRIATE PAM FLOCCULANT TO BE APPLIED TO EACH ROCK SILT CHECK.

INITIALLY APPLY 4 OUNCES OF POLYACRYLAMIDE (PAM) TO TOP OF MATTING SECTION AND AFTER EVERY RAINFALL EVENT THAT EQUALS OR EXCEEDS 0.50 INCHES.

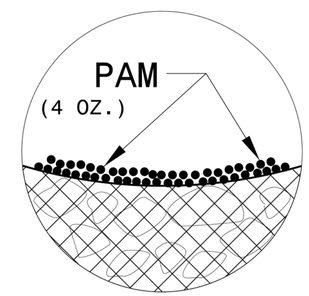

INSET A

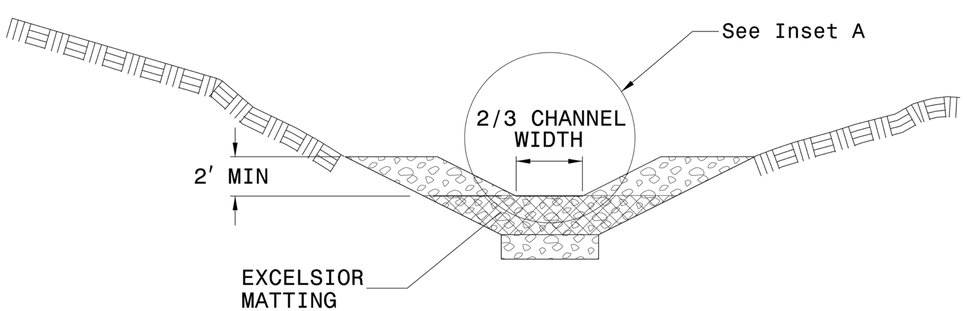

SECTION A-A

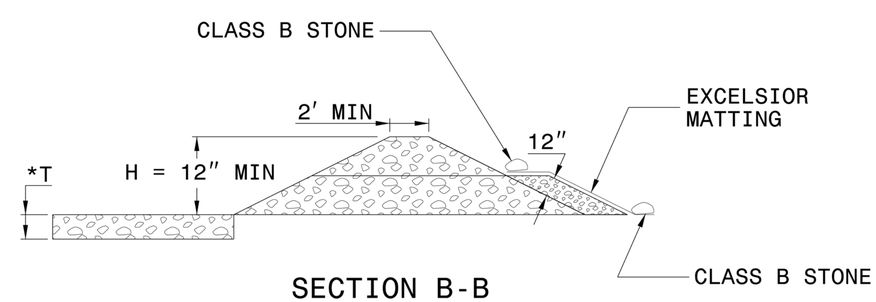

SECTION B-B

*T = 12" MIN., 18" MAX.

NOT TO SCALE

PROJECT REFERENCE NO.	SHEET NO.
17BP.14.R.132	EC-2A

SILT FENCE WATTLE BREAK DETAIL

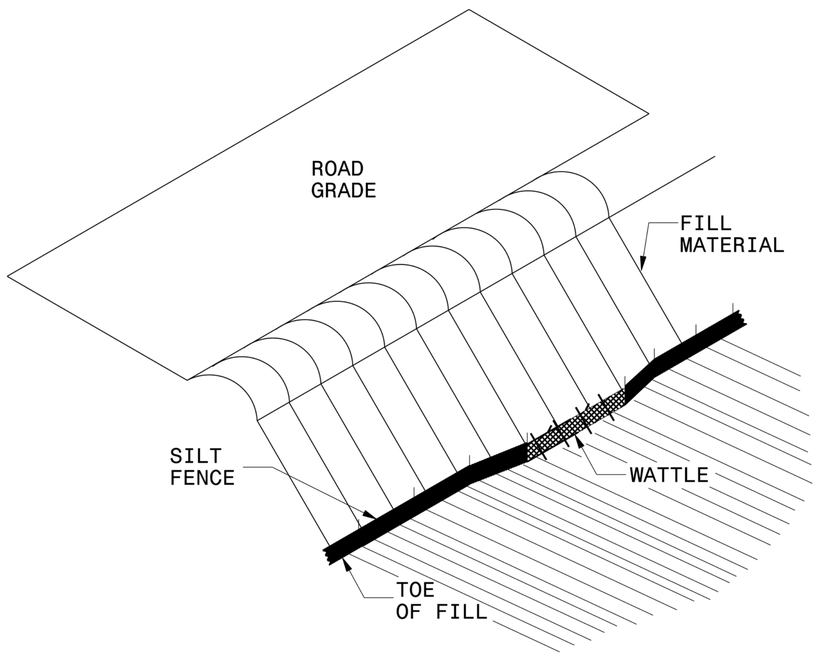

ISOMETRIC VIEW

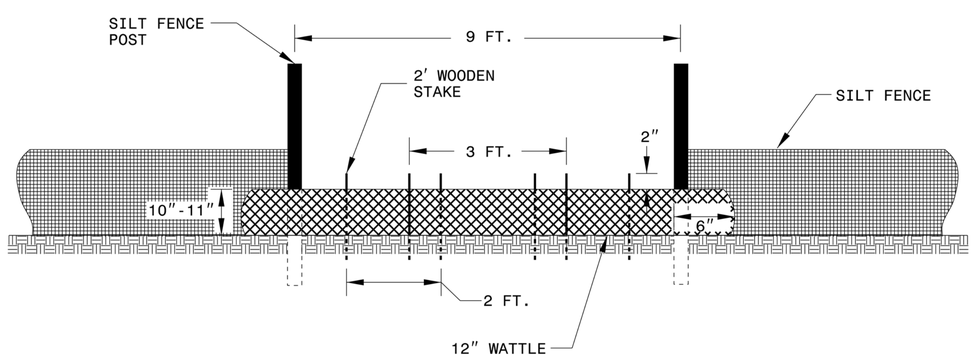

VIEW FROM SLOPE

NOTES:

USE MINIMUM 12 IN. DIAMETER EXCELSIOR WATTLE AND LENGTH OF 10 FT.

EXCAVATE A 1 TO 2 INCH TRENCH FOR WATTLE TO BE PLACED.

DO NOT PLACE WATTLE ON TOE OF SLOPE.

USE 2 FT. WOODEN STAKES WITH A 2 IN. BY 2 IN. NOMINAL CROSS SECTION.

INSTALL A MINIMUM OF 2 UPSLOPE STAKES AND 4 DOWNSLOPE STAKES AT AN ANGLE TO WEDGE WATTLE TO GROUND.

PROVIDE STAPLES MADE OF 0.125 IN. DIAMETER STEEL WIRE FORMED INTO A U SHAPE NOT LESS THAN 12" IN LENGTH.

INSTALL STAPLES APPROXIMATELY EVERY 1 LINEAR FOOT ON BOTH SIDES OF WATTLE AND AT EACH END TO SECURE IT TO THE SOIL.

WATTLE INSTALLATION CAN BE ON OUTSIDE OF THE SILT FENCE AS DIRECTED.

INSTALL TEMPORARY SILT FENCE IN ACCORDANCE WITH SECTION 1605 OF THE STANDARD SPECIFICATIONS.

INSET A

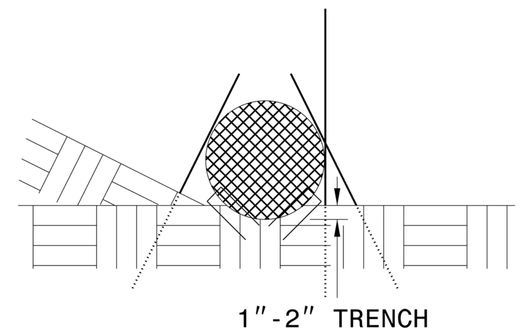

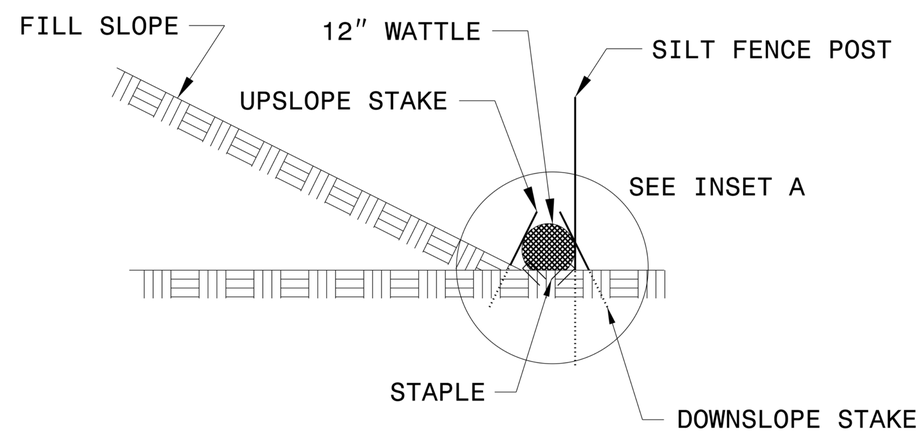

SIDE VIEW

PROJECT REFERENCE NO.	SHEET NO.
17BP.14.R.132	EC-3

DIVISION OF HIGHWAYS
STATE OF NORTH CAROLINA

SOIL STABILIZATION SUMMARY SHEET

MATTING FOR EROSION CONTROL

CONST SHEET NO.	LINE	FROM STATION	TO STATION	SIDE	ESTIMATE (SY)
4	-L-	12+75	14+00	LT	180
				SUBTOTAL	180
MISCELLANEOUS MATTING TO BE INSTALLED AS DIRECTED BY THE ENGINEER					20
				TOTAL	200
				SAY	200

MATTING FOR EROSION CONTROL

CONST SHEET NO.	LINE	FROM STATION	TO STATION	SIDE	ESTIMATE (SY)

PROJECT REFERENCE NO.	SHEET NO.
17BP.14.R.132	EC-3A

DIVISION OF HIGHWAYS
STATE OF NORTH CAROLINA

SOIL STABILIZATION TIMEFRAMES

SITE DESCRIPTION	STABILIZATION TIME	TIMEFRAME EXCEPTIONS
PERIMETER DIKES, SWALES, DITCHES AND SLOPES	7 DAYS	NONE
HIGH QUALITY WATER (HQW) ZONES	7 DAYS	NONE
SLOPES STEEPER THAN 3:1	7 DAYS	IF SLOPES ARE 10' OR LESS IN LENGTH AND ARE NOT STEEPER THAN 2:1, 14 DAYS ARE ALLOWED.
SLOPES 3:1 OR FLATTER	14 DAYS	7 DAYS FOR SLOPES GREATER THAN 50' IN LENGTH.
ALL OTHER AREAS WITH SLOPES FLATTER THAN 4:1	14 DAYS	NONE, EXCEPT FOR PERIMETERS AND HQW ZONES.

STATE	STATE PROJECT REFERENCE NO.	SHEET NO.	TOTAL SHEETS
N.C.	17BP.14.R.132	RF-1	
STATE PROJ. NO.	F. A. PROJ. NO.	DESCRIPTION	

PLANTING DETAILS

SEEDLING / LINER BAREROOT PLANTING DETAIL

HEALING IN

1. Locate a healing-in site in a shady, well protected area.
2. Excavate a flat bottom trench 12 inches deep and provide drainage.

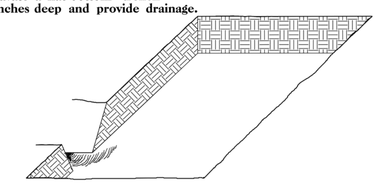

3. Backfill the trench with 2 inches well rotted sawdust. Place a 2 inch layer of well rotted sawdust at a sloping angle at one end of the trench.

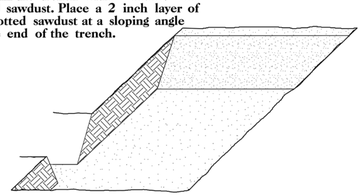

4. Place a single layer of plants against the sloping end so that the root collar is at ground level.

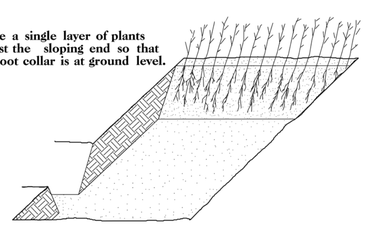

5. Place a 2 inch layer of well rotted sawdust over the roots maintaining a sloping angle.

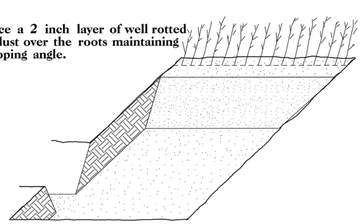

6. Repeat layers of plants and sawdust as necessary and water thoroughly.

DIBBLE PLANTING METHOD
USING THE KBC PLANTING BAR

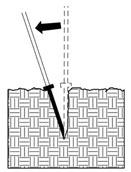

1. Insert planting bar as shown and pull handle toward planter.

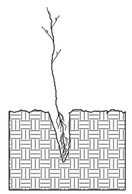

2. Remove planting bar and place seedling at correct depth.

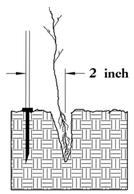

3. Insert planting bar 2 inches toward planter from seedling.

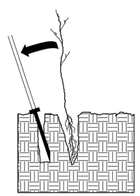

4. Pull handle of bar toward planter, firming soil at bottom.

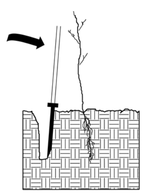

5. Push handle forward firming soil at top.

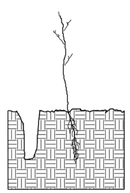

6. Leave compaction hole open. Water thoroughly.

PLANTING NOTES:

PLANTING BAG
During planting, seedlings shall be kept in a moist canvas bag or similar container to prevent the root systems from drying.

KBC PLANTING BAR
Planting bar shall have a blade with a triangular cross section, and shall be 12 inches long, 4 inches wide and 1 inch thick at center.

ROOT PRUNING
All seedlings shall be root pruned, if necessary, so that no roots extend more than 10 inches below the root collar.

REFORESTATION

☐ TREE REFORESTATION SHALL BE PLANTED 6 FT. TO 10 FT. ON CENTER, RANDOM SPACING, AVERAGING 8 FT. ON CENTER, APPROXIMATELY 680 PLANTS PER ACRE.

REFORESTATION

MIXTURE, TYPE, SIZE, AND FURNISH SHALL CONFORM TO THE FOLLOWING:

25%	LIRIODENDRON TULIPIFERA	TULIP POPLAR	12 in – 18 in BR
25%	PLATANUS OCCIDENTALIS	SYCAMORE	12 in – 18 in BR
25%	FRAXINUS PENNSYLVANICA	GREEN ASH	12 in – 18 in BR
25%	BETULA NIGRA	RIVER BIRCH	12 in – 18 in BR

REFORESTATION DETAIL SHEET

N.C.D.O.T. - ROADSIDE ENVIRONMENTAL UNIT

8/25/14

TIP PROJECT: 17BP.14.R.132

CONTRACT: DN00112

T.I.P. NO.	SHEET NO.
17BP.14.R.132	UO–1

STATE OF NORTH CAROLINA
DIVISION OF HIGHWAYS

UTILITIES BY OTHERS
HENDERSON COUNTY

LOCATION: BRIDGE NO. 135 OVER SHAW CREEK ON SR 1215 (TURLEY FALLS ROAD)

TYPE OF WORK: AERIAL POWER, TELEPHONE AND CABLE TV, UNDERGROUND TELEPHONE

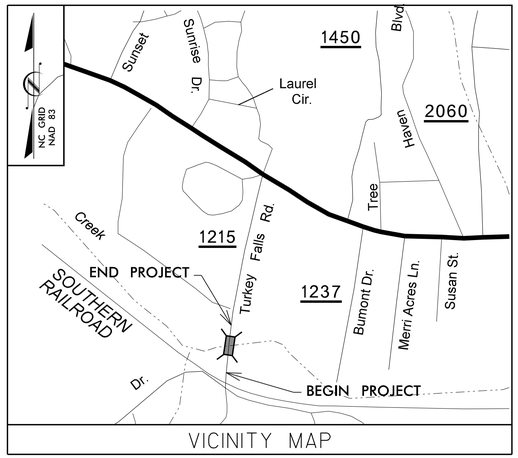

VICINITY MAP

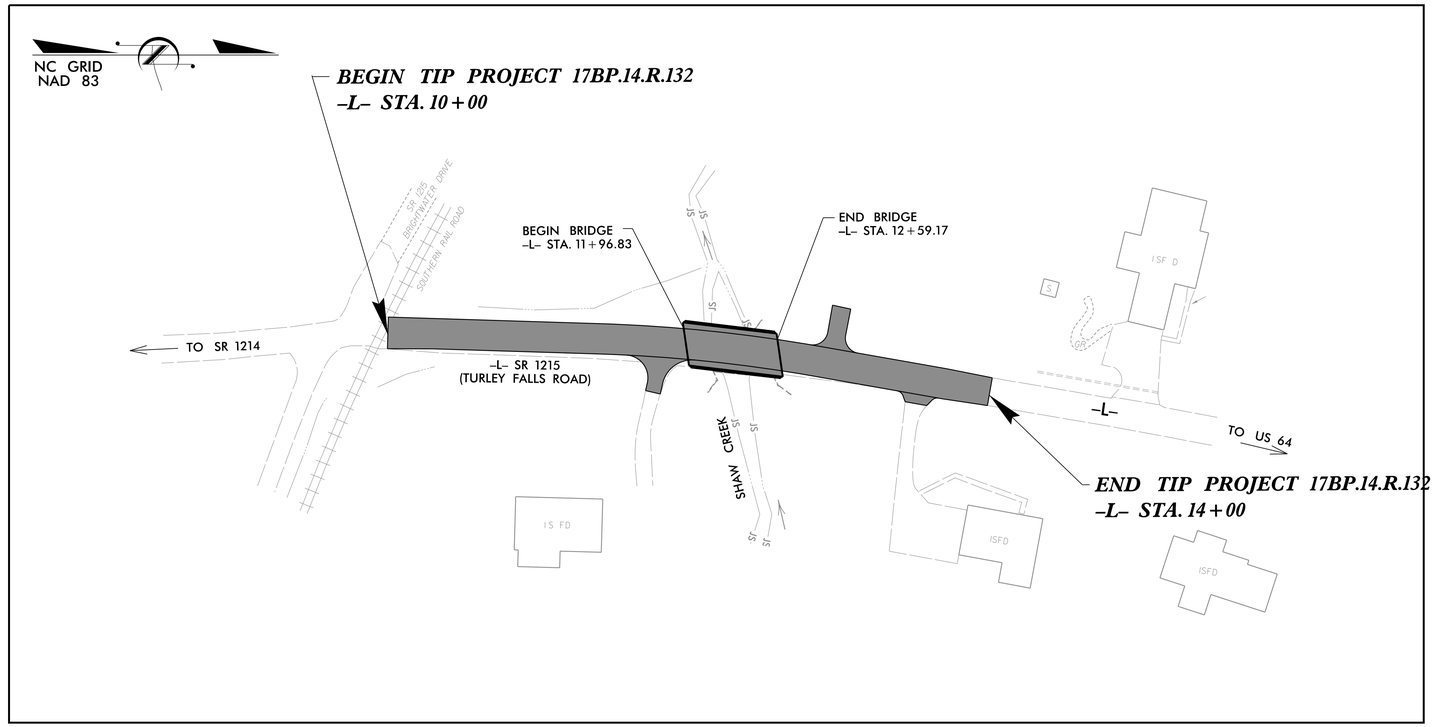

V&M
Vaughn & Melton
Consulting Engineers
Asheville, North Carolina 828-253-2796
Charlotte, North Carolina 704-357-0488
Tri-Cities, Tennessee 423-467-8401
Knoxville, Tennessee 865-546-5800
Middlesboro, Kentucky 606-248-6600
Spartanburg, South Carolina 864-574-4775

Copyright © 1994 Vaughn & Melton, Inc. All Rights Reserved

GRAPHIC SCALES

20 10 0 20 40
PLANS

INDEX OF SHEETS

SHEET NO.	DESCRIPTION
UO–1	TITLE SHEET
UO–2	UTILITIES BY OTHERS PLAN SHEET

UTILITY OWNERS ON PROJECT

(1) POWER – DUKE ENERGY

(2) CABLE TV – MORRIS BROADBAND

(3) TELEPHONE – AT&T

PLANS PREPARED BY:

V&M
Vaughn & Melton
Consulting Engineers
3089-L Beam Road
Charlotte, NC 28217
704-357-0488

PREPARED FOR THE OFFICE OF:

DIVISION OF HIGHWAYS
UTILITIES ENGINEERING SECTION

1591 MAIL SERVICES CENTER
RALEIGH NC 27699–1591
PHONE (919) 250–4128
FAX (919) 250–4119

Roger Worthington, P.E.	UTILITIES SECTION ENGINEER
Xxxxx Xxxxx, P.E.	UTILITIES SQUAD LEADER PROJECT ENGINEER
Lynn Mann, P.G.	UTILITIES PROJECT DESIGNER

V&M PROJECT #31235-03
TRANSPORTATION\31235-03\UTILITIES\UO-1.DGN

12/10/14

TIP PROJECT: 17BP.14.R.132

CONTRACT: DN00112

PROJECT REFERENCE NO.	SHEET NO.
17BP.14.R.132	UO-2

UTILITIES BY OTHERS

NOTE:
ALL PROPOSED UTILITY WORK SHOWN ON THIS SHEET WILL BE DONE BY OTHERS

TEMPORARY POLES 1, 2 & 3 WILL BE SET BY DUKE ENERGY, OTHER UTILITIES WILL ATTACH TO POLES 1 & 2.
ONCE BRIDGE CONSTRUCTION IS COMPLETE, TEMPORARY POLES WILL BE REMOVED & UTILITIES WILL BE ATTACHED TO NEW POLE 4.

EXISTING POLE #4 TO BE REMOVED PRIOR TO CONSTRUCTION.
AFTER BRIDGE CONSTRUCTION IS COMPLETE, AT&T WILL SET NEW 45' POLE AT THIS LOCATION. POWER AND CATV WILL REATTACH TO NEW POLE AND FOLLOW PRECONSTRUCTION ROUTE(S) TO EXISTING POLES #5 AND #6.

(A) TEMPORARY UNDERGROUND TELEPHONE LINE WILL BE ROUTED TO TEMPORARY POLE 2 AND GO AERIAL FROM THIS POINT.
(B) NEW PERMANENT UNDERGROUND TELEPHONE LINE WILL BE INSTALLED TO NEW POLE 4 AFTER BRIDGE CONSTRUCTION IS COMPLETED.

TEMPORARY POLE 7 WILL BE SET BY AT&T, MORRIS BROADBAND WILL ALSO ATTACH. BOTH WILL CONSTRUCT TEMPORARY LINES FROM TEMP POLE 1 TO TEMP. POLE 2 TO TEMP POLE 7 TO EX. POLE 6

V&M
Vaughn & Melton
Consulting Engineers
Asheville, North Carolina 828-253-2796
Charlotte, North Carolina 828-357-0488
Tri-Cities, Tennessee 423-467-8401
Knoxville, Tennessee 865-546-5800
Middlesboro, Kentucky 606-248-6600
Spartanburg, South Carolina 864-574-4775

Copyright © 1994 Vaughn & Melton, Inc. All Rights Reserved

NAD 83/
NSRS 2007

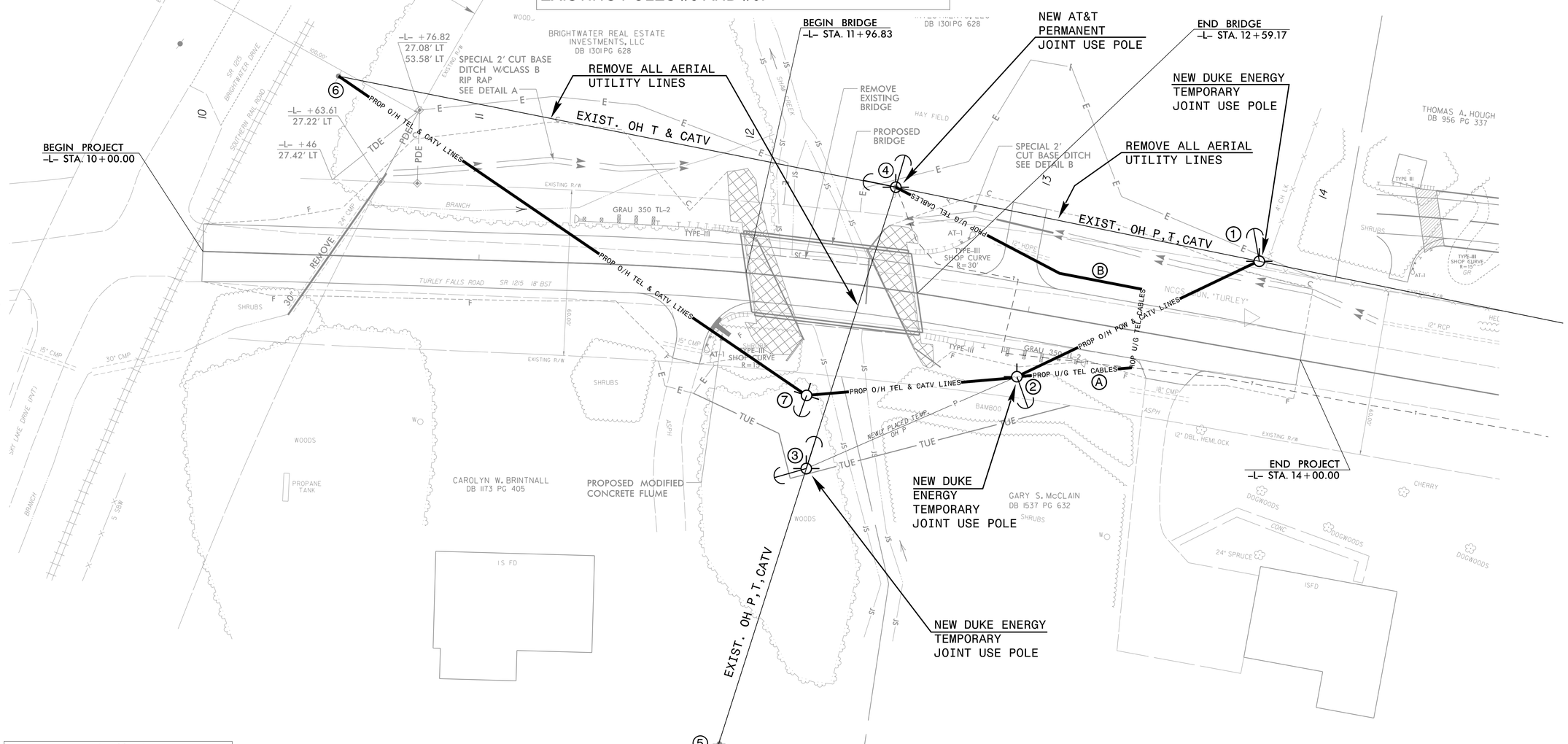

DETAIL B
SPECIAL CUT BASE DITCH
(Not to Scale)

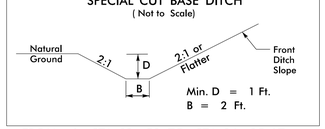

FROM -L- STA. 12+50 TO STA. 14+25 LT.

V&M PROJECT #31235-03
TRANSPORTATION\31235-03\UTILITIES\UO-2.DGN

COMPUTED BY: NVA DATE: 04-12-13
CHECKED BY: RMS DATE: 04-12-13

PROJECT REFERENCE NO.	SHEET NO.
17BP.4.R.J32	X-0

DIVISION OF HIGHWAYS
STATE OF NORTH CAROLINA

NORTH CAROLINA PROFESSIONAL SEAL 26960 ENGINEER
Designed by: RYAN M. SCHULTZ
Date: 04/24/2015

CROSS SECTION SUMMARY

IN CUBIC YARDS

-L- LOCATION	UNCLASSIFIED EXCAVATION	EMBT
10+00	0	0
10+25	0	0
10+50	0	3
10+75	29	14
11+00	66	27
11+25	83	40
11+50	77	50
11+75	32	35
11+96.84 BEGIN BRIDGE	0	17
12+59.18 END BRIDGE	0	0
12+75	21	19
13+00	16	25
13+25	14	15
13+50	23	8
13+75	13	6
14+00	12	4

NOTE: EMBANKMENT COLUMN DOES NOT INCLUDE BACKFILL FOR UNDERCUT.

Approximate quantities only. Unclassified excavation, borrow excavation, fine grading, clearing and grubbing, and removal of existing pavement will be paid for at the contract lump sum price for "grading".

8/23/99

0 2.5 5	PROJ. REFERENCE NO.	SHEET NO.
	17BP.14.R.132	X-1

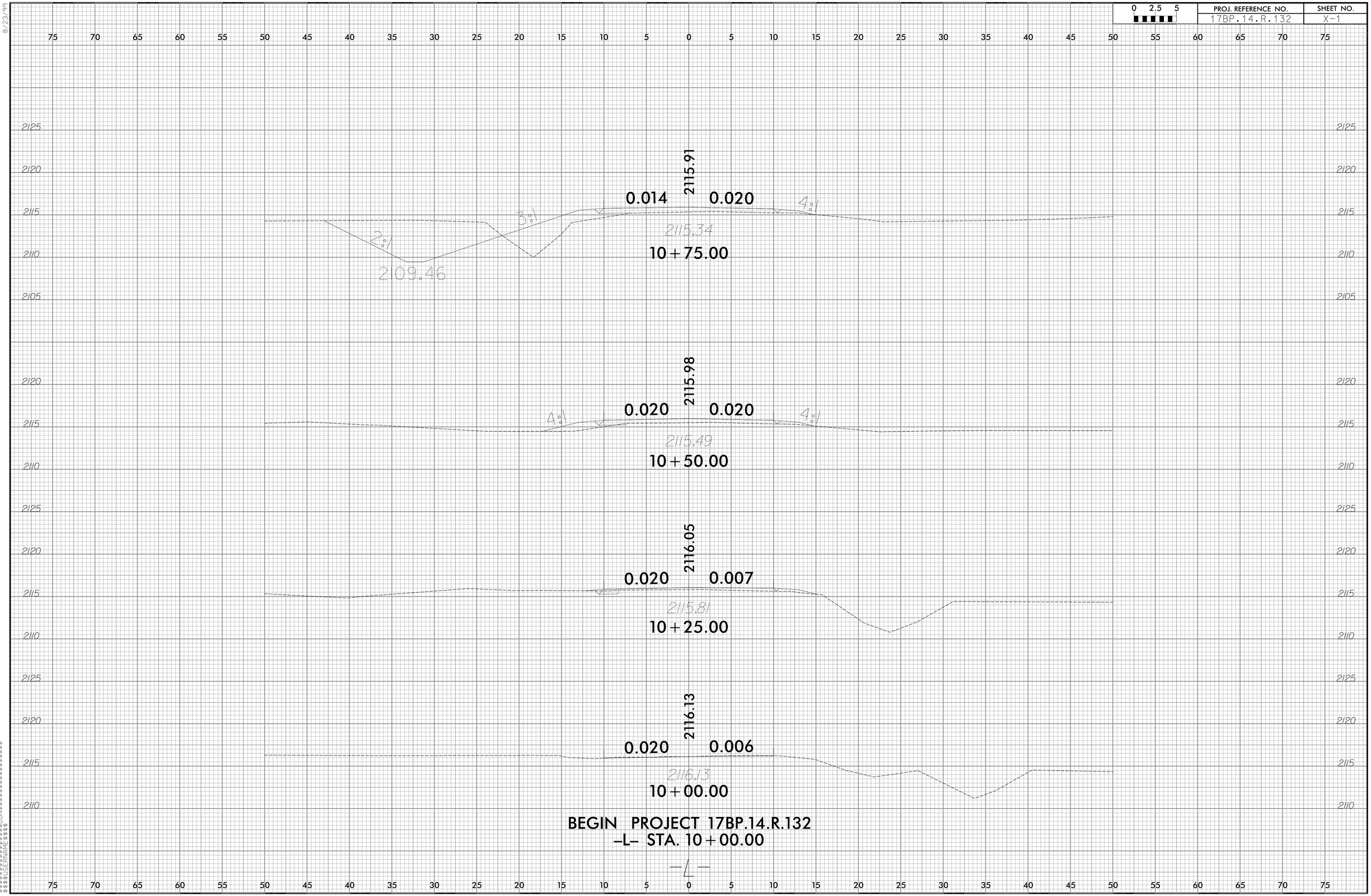

$$$$$$SYSTIME$$$$
$$$$$$SYSNAME$$$$
$$$$$$DGNS$$$$$$$$$$$$$$$$$$$$
$$$$$$USERNAME$$$$

8/23/99

0 2.5 5	PROJ. REFERENCE NO.	SHEET NO.
	17BP.14.R.132	X-2

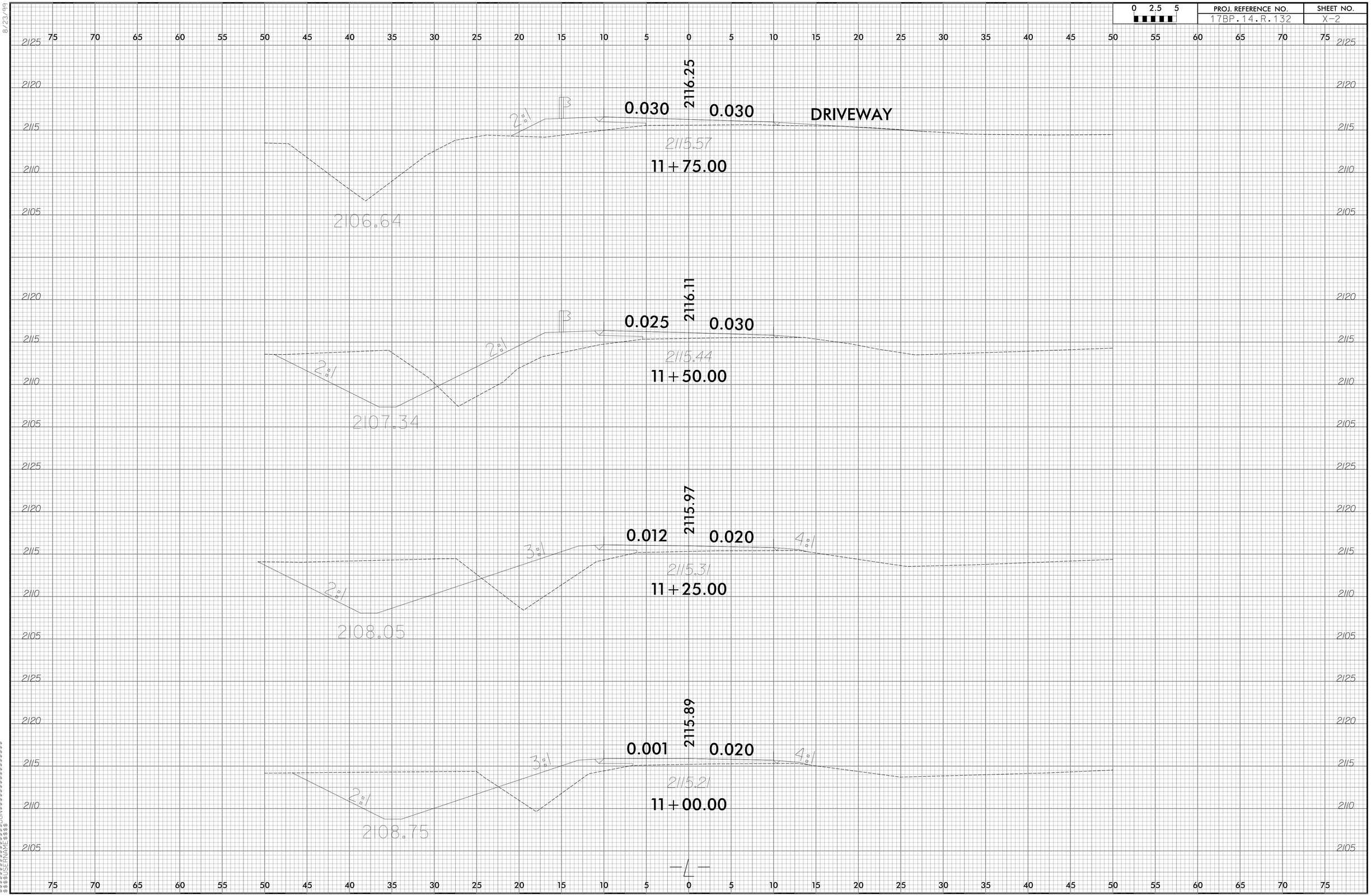

$$$$$SYSTIME$$$$$
$$$$$SNAME$$$$$
$$$$$DGN$$$$$
$$$$$USERNAME$$$$$

PROJ. REFERENCE NO.	SHEET NO.
17BP.14.R.132	X-3

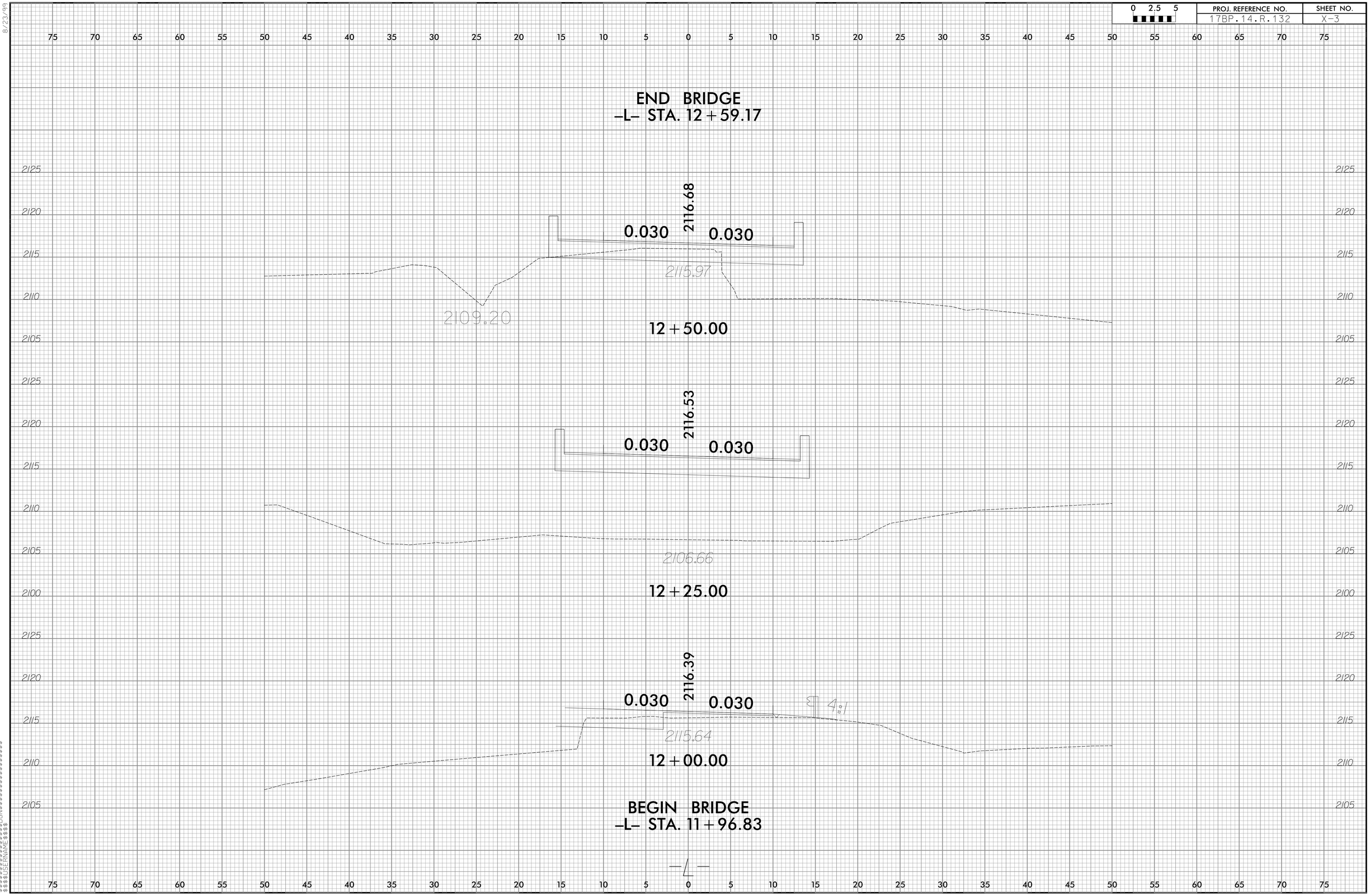

8/23/99

$$$$$SYSTIME$$$$
$$$$$SYSNAME$$$$DGN$$$$$$$$$$$$$$$$$$$$
$$$$$USERNAME$$$$

8/23/99

0 2.5 5	PROJ. REFERENCE NO.	SHEET NO.
	17BP.14.R.132	X-4

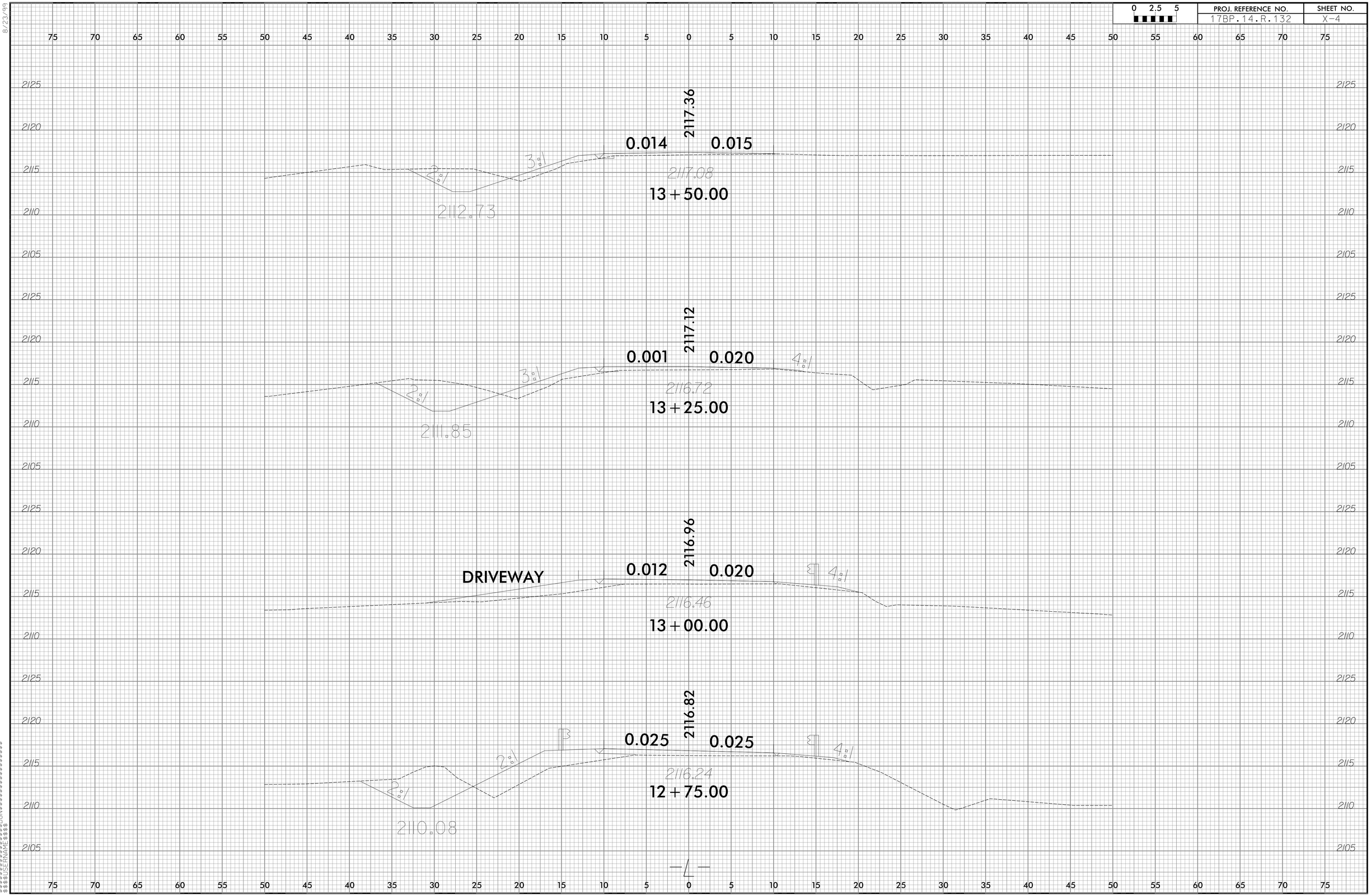

$$$$$SYSTIME$$$$
$$$$$SYSTIME$$$$
$$$$$DGN$$$$$$$$$$$$$$$$$$$$$$
$$$$$USERNAME$$$$

8/23/99

0 2.5 5	PROJ. REFERENCE NO.	SHEET NO.
	17BP.14.R.132	X-5

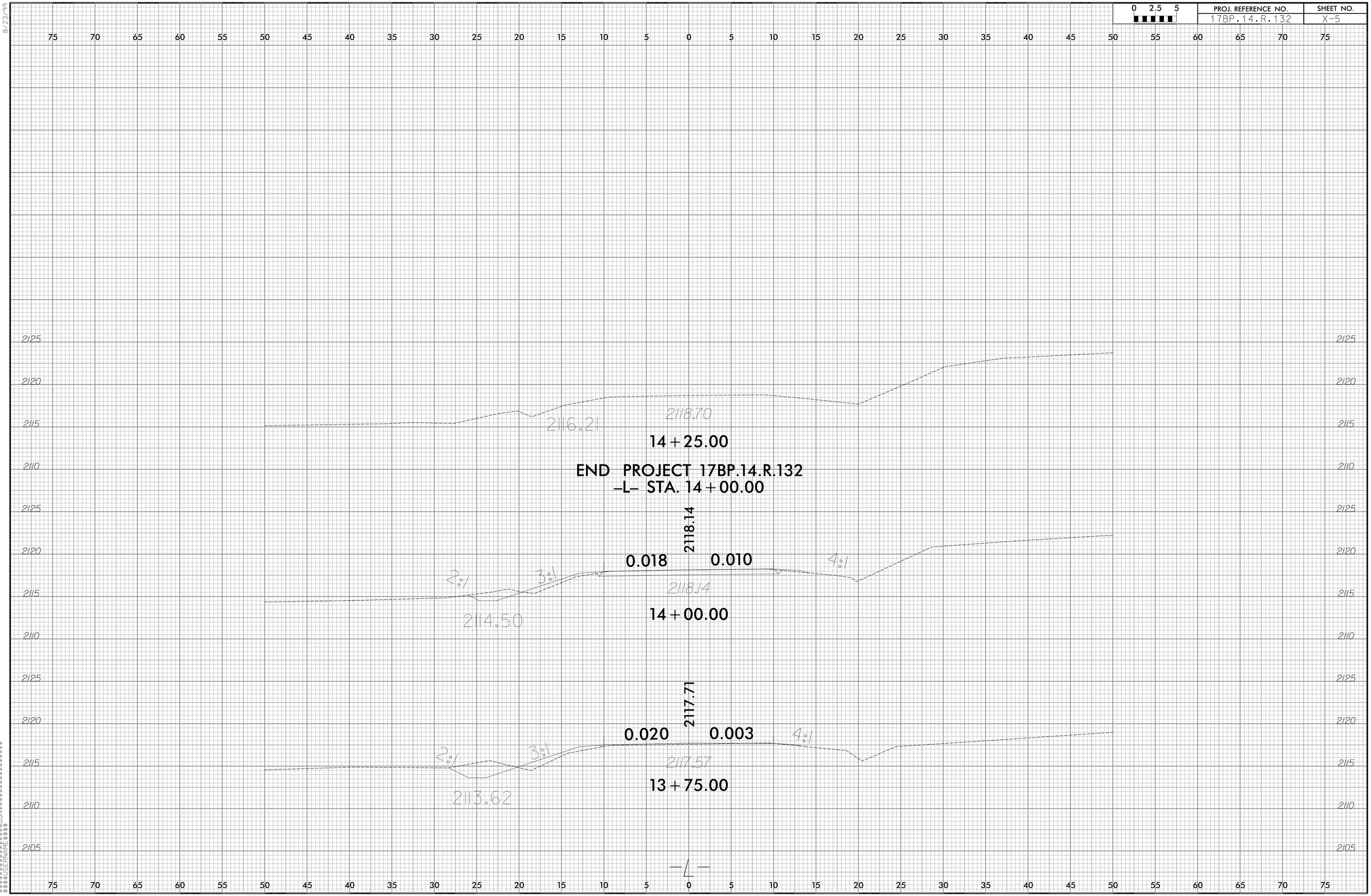

$$$$$SYSTIME$$$$
$$$$$SAVE$$$$DGN$$$$$$$$$$$$$$$$$$$$
$$$$USERNAME$$$$

NO: 17BP.14.R.132

CONTRACT: DN00112

STATE	STATE PROJECT REFERENCE NO.	SHEET NO.	TOTAL SHEETS
N.C.	17BP.14.R.132	0	00

STATE PROJ. NO.	F. A. PROJ. NO.	DESCRIPTION
45360.1.25	BRZ-1215(3)	PE
45360.2.25	BRZ-1215(3)	R/W
17BP.14.R.132		CONST.

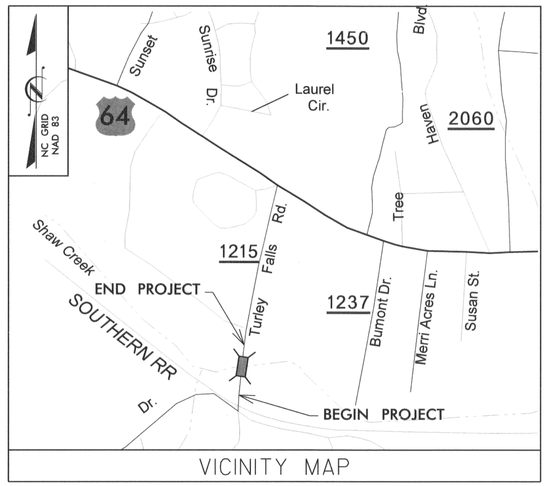

VICINITY MAP

STATE OF NORTH CAROLINA

DIVISION OF HIGHWAYS

HENDERSON COUNTY

BRIDGE NO. 135 OVER SHAW CREEK ON SR 1215 (TURLEY FALLS ROAD)

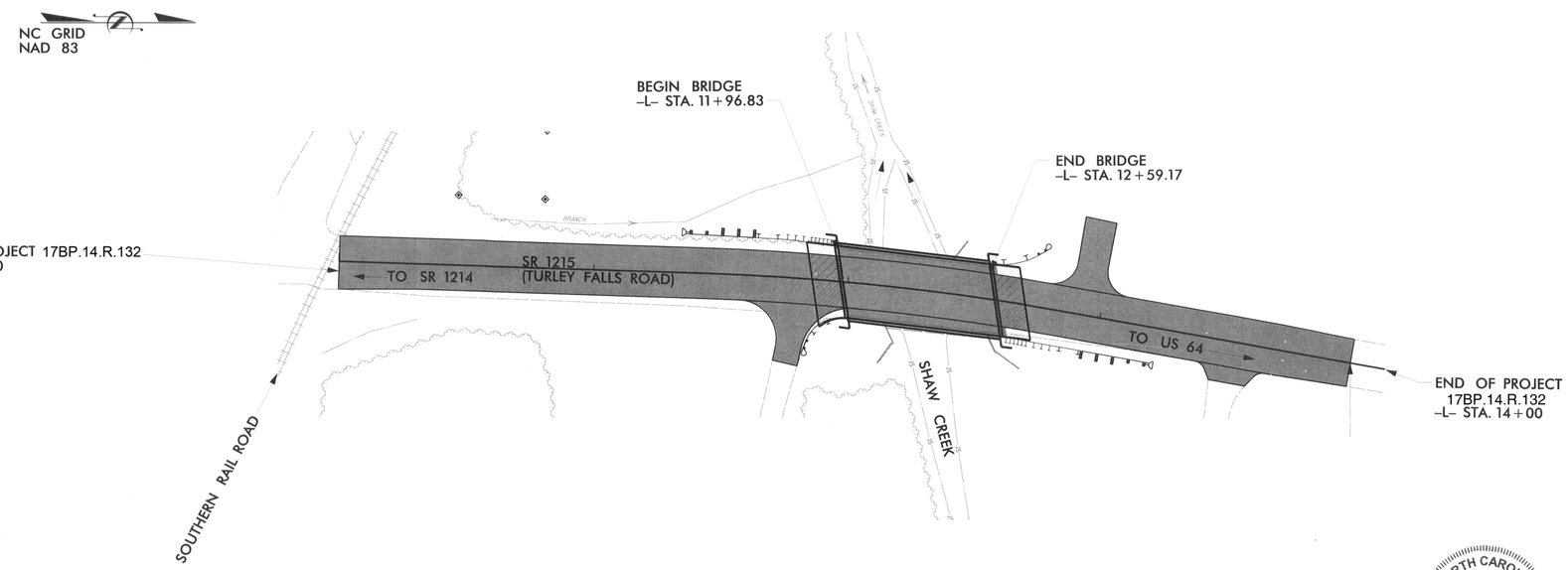

STRUCTURE

NORTH CAROLINA PROFESSIONAL SEAL 027777 ENGINEER HARDY L. WILLIS 7/14/14

V&M Vaughn & Melton Consulting Engineers

Asheville, North Carolina 828-253-2796

Charlotte, North Carolina 704-357-0488

Tri-Cities, Tennessee 423-467-8401

Knoxville, Tennessee 865-546-5800

Middlesboro, Kentucky 606-248-6600

Spartanburg, South Carolina 864-574-4775

Copyright © 2006 Vaughn & Melton, Inc. All Rights Reserved

STATE OF NORTH CAROLINA DEPARTMENT OF TRANSPORTATION

DESIGN DATA

ADT 2010 = 230
ADT 2025 = 380

T = %
V = 35 MPH

FUNC CLASS = LOCAL
SUBREGIONAL TIER

PROJECT LENGTH

LENGTH ROADWAY PROJECT	=	0.064 MI
LENGTH STRUCTURE PROJECT	=	0.012 MI
TOTAL LENGTH OF PROJECT	=	0.076 MI

Prepared In the Office of:
VAUGHN & MELTON
1318-F PATTON AVE.
ASHEVILLE NC. 28806
FOR THE NORTH CAROLINA DIVISION OF HIGHWAYS

2012 STANDARD SPECIFICATIONS

LETTING DATE :

JUNE 26, 2014

HARDY WILLIS, PE
PROJECT ENGINEER

RYAN SHIPMAN, E. I.
PROJECT DESIGN ENGINEER

STRUCTURES MANAGEMENT UNIT
1000 BIRCH RIDGE DR.
RALEIGH, N.C. 27610

DIVISION OF HIGHWAYS
STATE OF NORTH CAROLINA

JOSHUA DEYTON P.E.
STATE DESIGN ENGINEER

DEPARTMENT OF TRANSPORTATION
FEDERAL HIGHWAY ADMINISTRATION

APPROVED
DIVISION ADMINISTRATOR DATE

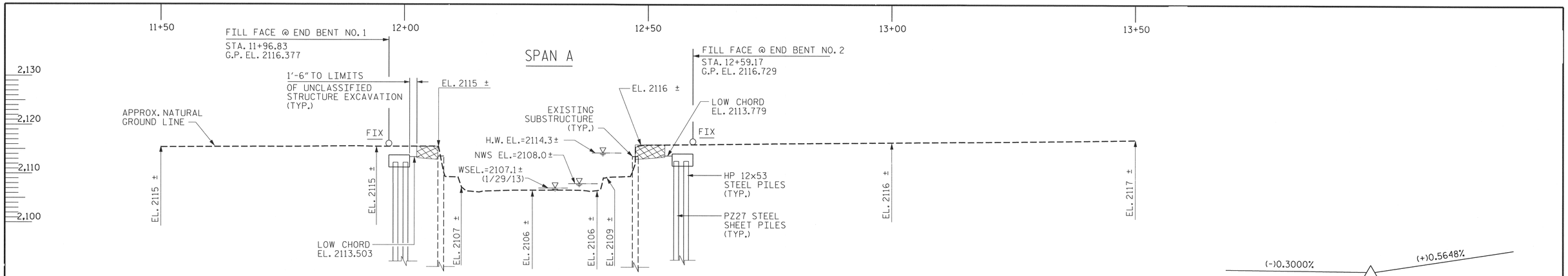

END BENT NO. 1

END BENT NO. 2

SECTION ALONG ℄ SURVEY -L-

SECTIONS AT END BENTS ARE AT RIGHT ANGLES.

UNCLASSIFIED
STRUCTURE EXCAVATION

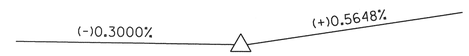

PI = 11+00.00
EL = 2,115.83'
VC = 60'

GRADE DATA -L-

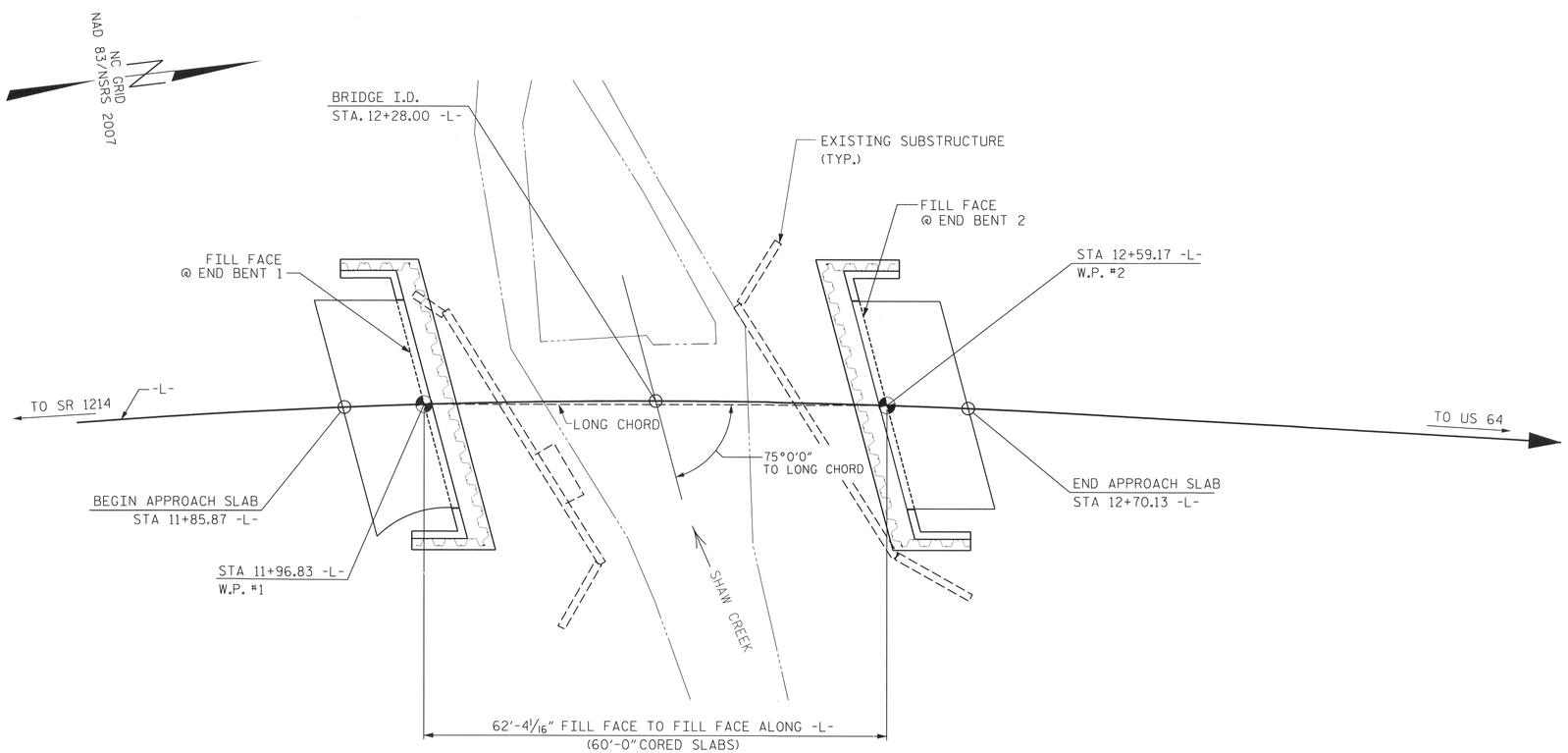

PI Sta 12+12.20
Δ = 8° 12' 43.6"(RT)
D = 5° 43' 46.5"
L = 143.33'
T = 71.79'
R = 1,000.00'

HORIZONTAL CURVE DATA -L-

NOTES:

END BENTS ARE PARALLEL.
PILES NOT SHOWN IN PLAN VIEW FOR CLARITY.
CORED SLABS ARE PARALLEL TO LONG CORD

PLAN ALONG ℄ SURVEY -L-

NORTH CAROLINA PROFESSIONAL SEAL ENGINEER HARDY L. WILLIS 11/14/14

PROJECT NO. 17BP.14.R.132

HENDERSON COUNTY

STATION: 12+28.00 -L-

SHEET 1 OF 3 REPLACES BRIDGE NO. 135

V&M Vaughn & Melton Consulting Engineers
Asheville, North Carolina 828-253-2796
Charlotte, North Carolina 704-357-0488
Tri-Cities, Tennessee 423-467-8401
Knoxville, Tennessee 865-546-5800
Middlesboro, Kentucky 606-248-6600
Spartanburg, South Carolina 864-574-4775
Copyright © 2006 Vaughn & Melton, Inc. All Rights Reserved

STATE OF NORTH CAROLINA
DEPARTMENT OF TRANSPORTATION
RALEIGH

GENERAL DRAWING
BRIDGE ON SR 1215
(TURLEY FALLS RD.) OVER SHAW CREEK
BETWEEN SR. 1214 AND US 64.

NOVEMBER 2013

DWN. BY: CJR DATE: 11/2013
CHKD. BY: HLW DATE: 11/2013
ENG. OF REC.: RTS DATE: 11/2013

REVISIONS							
NO.	BY:	DATE:	NO.	BY:	DATE:	SHEET NO.	S-1
1			3			TOTAL SHEETS	22
2			4				

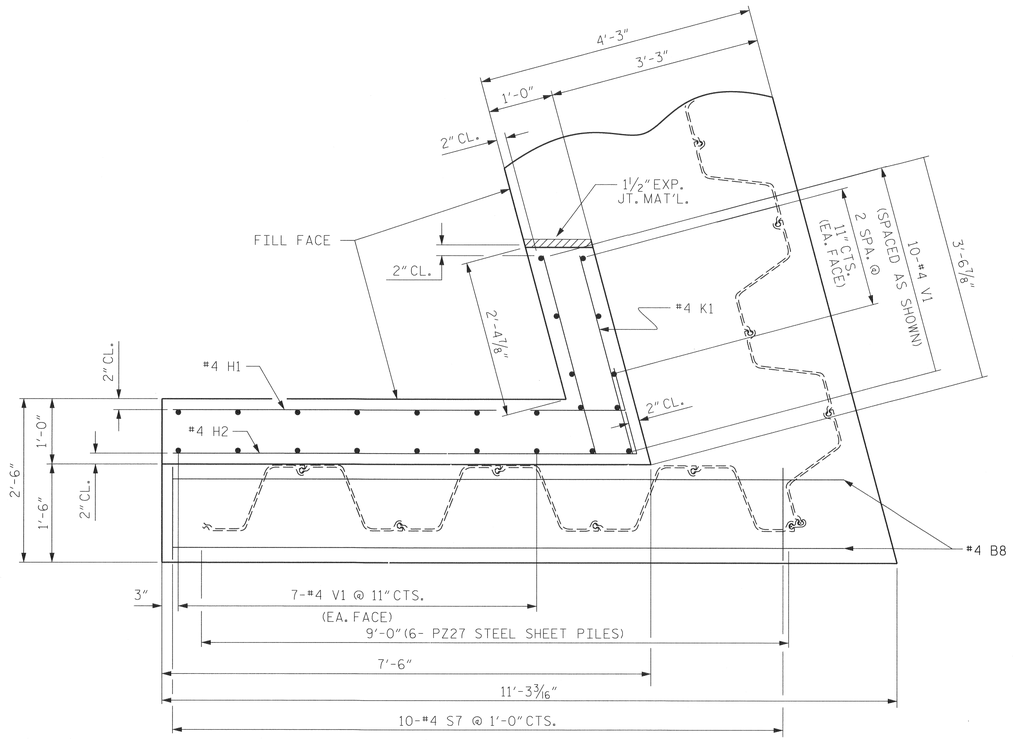

PLAN OF WING (W3)

(STAGE I)

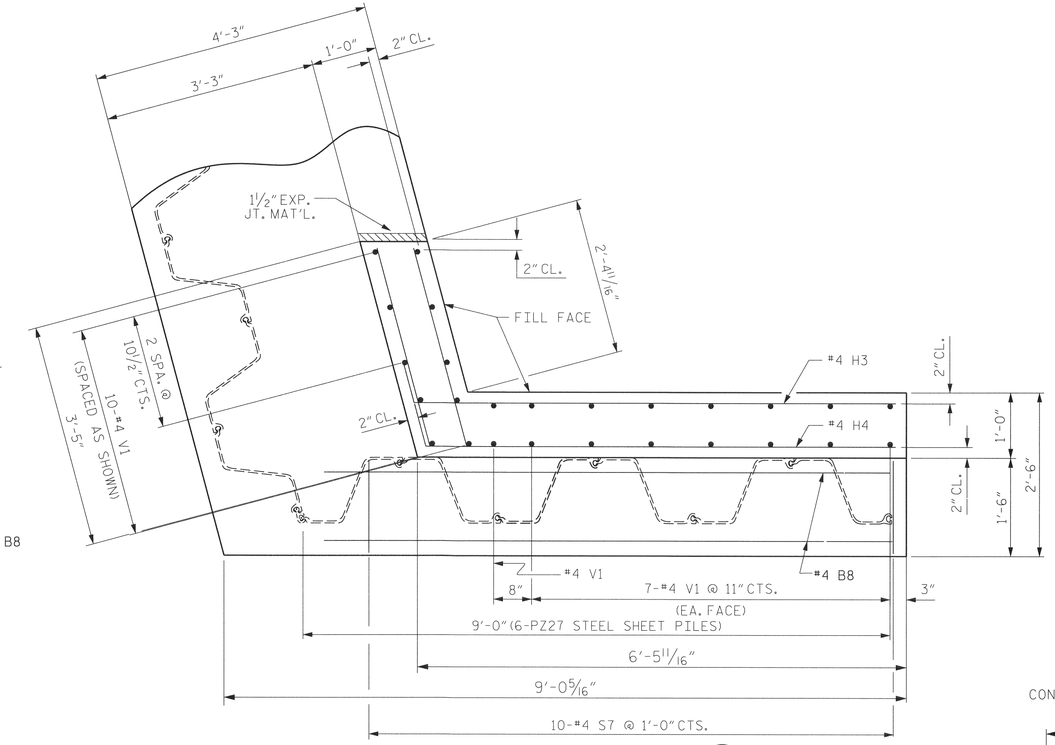

PLAN OF WING (W4)

(STAGE II)

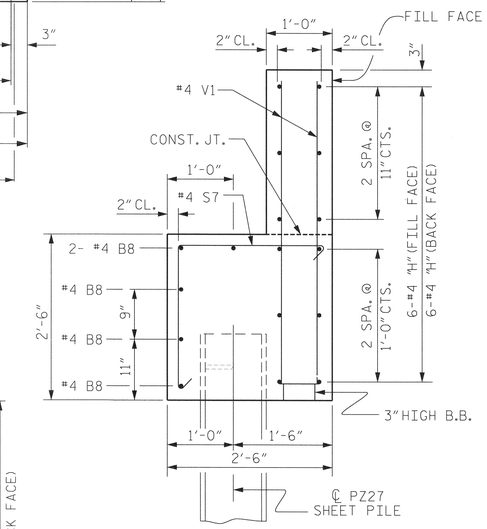

SECTION X-X

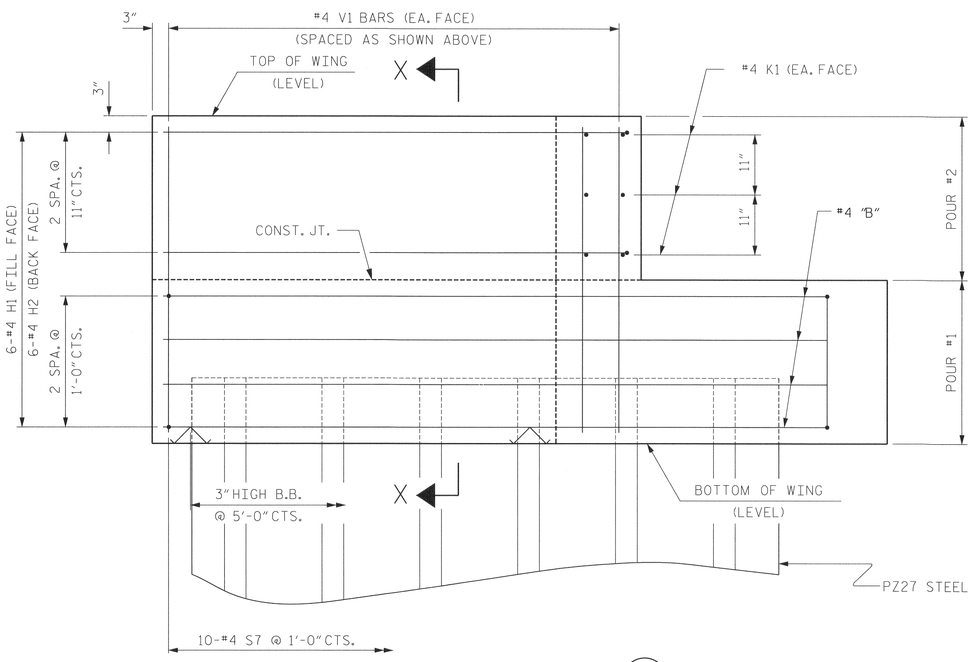

ELEVATION OF WING (W3)

(STAGE I)

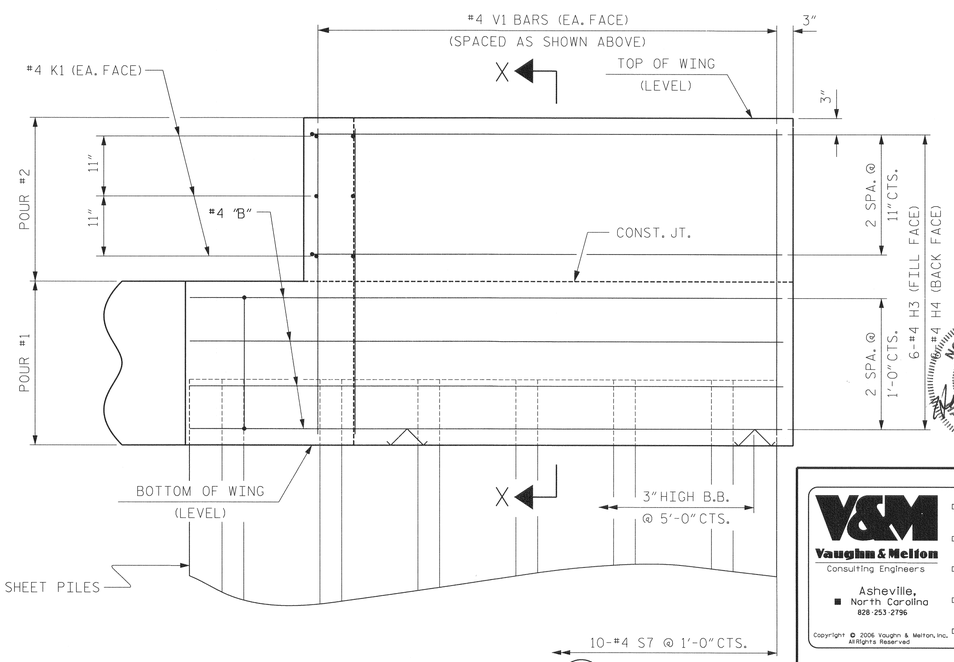

ELEVATION OF WING (W4)

(STAGE II)

WING DETAILS

NORTH CAROLINA PROFESSIONAL SEAL 030787 ENGINEER HARDY L. WILLIS 11/14/14

PROJECT NO. 17BP.14.R.132

HENDERSON COUNTY

STATION: 12+28.00 -L-

SHEET 3 OF 4

V&M Vaughn & Melton Consulting Engineers

Asheville, North Carolina 828-253-2796

Charlotte, North Carolina 704-357-0488
Tri-Cities, Tennessee 423-467-840
Knoxville, Tennessee 865-546-5900
Middlesboro, Kentucky 606-248-6600
Spartanburg, South Carolina 864-574-4775

Copyright © 2006 Vaughn & Melton, Inc. All Rights Reserved

STATE OF NORTH CAROLINA
DEPARTMENT OF TRANSPORTATION
RALEIGH

SUBSTRUCTURE

END BENT NO. 2
DETAILS

DWN. BY: CJR DATE: 11/2013
CHKD. BY: HLW DATE: 11/2013
ENG. OF REC.: RTS DATE: 11/2013

REVISIONS						
NO.	BY:	DATE:	NO.	BY:	DATE:	
1			3			
2			4			

SHEET NO. S-19

TOTAL SHEETS 22

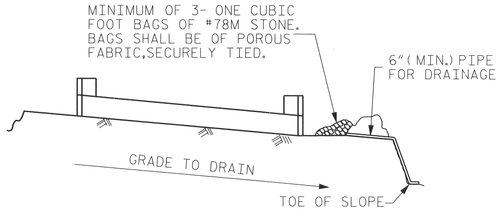

BAGGED STONE AND PIPE SHALL BE PLACED IMMEDIATELY AFTER COMPLETION OF END BENT EXCAVATION. PIPE MAY BE EITHER CONCRETE, CORRUGATED STEEL, CORRUGATED ALUMINUM ALLOY, OR CORRUGATED PLASTIC. PERFORATED PIPE WILL NOT BE ALLOWED.

BAGGED STONE SHALL REMAIN IN PLACE UNTIL THE ENGINEER DIRECTS THAT IT BE REMOVED. THE CONTRACTOR SHALL REMOVE AND DISPOSE OF SILT ACCUMULATIONS AT BAGGED STONE WHEN SO DIRECTED BY THE ENGINEER. BAGS SHALL BE REMOVED AND REPLACED WHENEVER THE ENGINEER DETERMINES THAT THEY HAVE DETERIORATED AND LOST THEIR EFFECTIVENESS.

NO SEPARATE PAYMENT WILL BE MADE FOR THIS WORK AND THE ENTIRE COST OF THIS WORK SHALL BE INCLUDED IN THE UNIT CONTRACT PRICE BID FOR THE SEVERAL PAY ITEMS.

TEMPORARY DRAINAGE AT END BENT

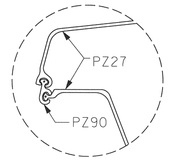

DETAIL "B"

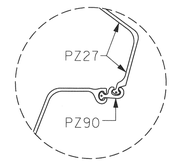

DETAIL "C"

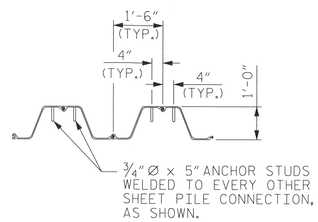

ANCHOR STUD DETAIL

SHEET PILE CONNECTION DETAILS

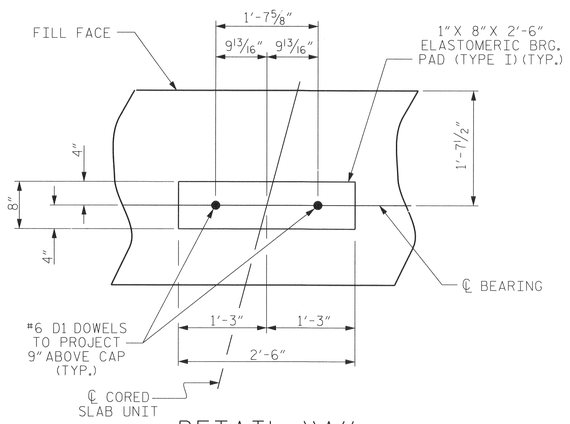

DETAIL "A"

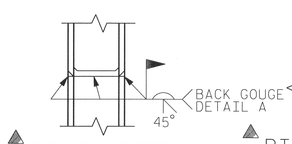

▲ PILE VERTICAL

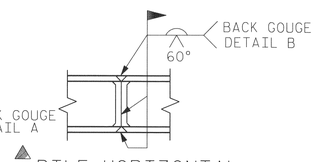

▲ PILE HORIZONTAL OR VERTICAL

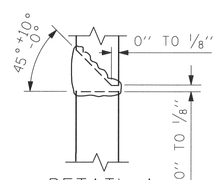

DETAIL A

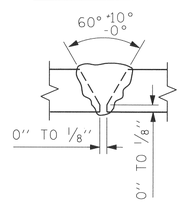

DETAIL B

▲ POSITION OF PILE DURING WELDING.

PILE SPLICE DETAILS

BAR TYPES

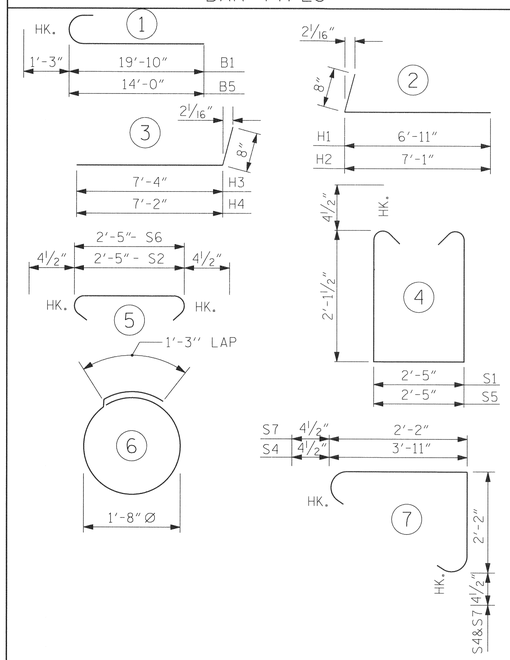

ALL BAR DIMENSIONS ARE OUT TO OUT.

HP 12 X 53 STEEL PILES NO: 5 LIN. FT.= 238

18" STEEL SHEET PILES

NO. PZ27 = 38
NO. PZ90 = 2
TOTAL = 40 SQ. FT. = 1009

BILL OF MATERIAL FOR END BENT 2

STAGE I

BAR	NO.	SIZE	TYPE	LENGTH	WEIGHT
B1	8	#9	1	22'-3"	605
B2	8	#4	STR	21'-3"	114
B3	5	#4	STR	2'-5"	8
B4	5	#4	STR	22'-7"	75
B8	5	#4	STR	9'-0"	30
D1	10	#6	STR	1'-6"	23
H1	6	#4	2	7'-7"	30
H2	6	#4	2	7'-9"	31
K1	6	#4	STR	3'-1"	12
S1	23	#4	4	7'-5"	114
S2	23	#4	5	3'-2"	49
S3	6	#4	6	6'-6"	26
S4	20	#4	7	6'-10"	91
S5	1	#4	4	7'-6"	5
S6	1	#4	5	3'-3"	2
S7	10	#4	7	5'-1"	34
V1	24	#4	STR	4'-8"	75

STAGE I SUBTOTAL: 1324 LBS.

STAGE II

BAR	NO.	SIZE	TYPE	LENGTH	WEIGHT
B3	5	#4	STR	2'-5"	8
B5	8	#9	1	20'-3"	551
B6	8	#4	STR	18'-4"	98
B7	5	#4	STR	19'-10"	66
B8	5	#4	STR	9'-0"	30
D1	10	#6	STR	1'-6"	23
H3	6	#4	3	8'-0"	32
H4	6	#4	3	7'-10"	31
K1	6	#4	STR	3'-1"	12
S1	25	#4	4	7'-5"	124
S2	25	#4	5	3'-2"	53
S3	4	#4	6	6'-6"	17
S4	20	#4	7	6'-10"	91
S5	1	#4	4	7'-6"	5
S6	1	#4	5	3'-3"	2
S7	10	#4	7	5'-1"	34
V1	26	#4	STR	4'-8"	81

STAGE II SUBTOTAL: 1258 LBS.

STAGE I

CLASS A CONCRETE BREAKDOWN

POUR #1 CAP, LOWER PART OF WINGS 9.4 C.Y.

POUR #2 UPPER PART OF WINGS 0.9 C.Y.

TOTAL CLASS A CONCRETE 10.3 C.Y.

STAGE II

CLASS A CONCRETE BREAKDOWN

POUR #1 CAP, LOWER PART OF WINGS 9.6 C.Y.

POUR #2 UPPER PART OF WINGS 0.9 C.Y.

TOTAL CLASS A CONCRETE 10.5 C.Y.

TOTAL BILL MATERIAL FOR END BENT 2

CLASS A CONCRETE	REINF. STEEL	HP 12 X 53 STEEL PILES		18" STEEL SHEET PILES
CU. YDS.	LBS	NO.	LIN. FT.	SQ. FT.
20.8	2582	5	235	1009

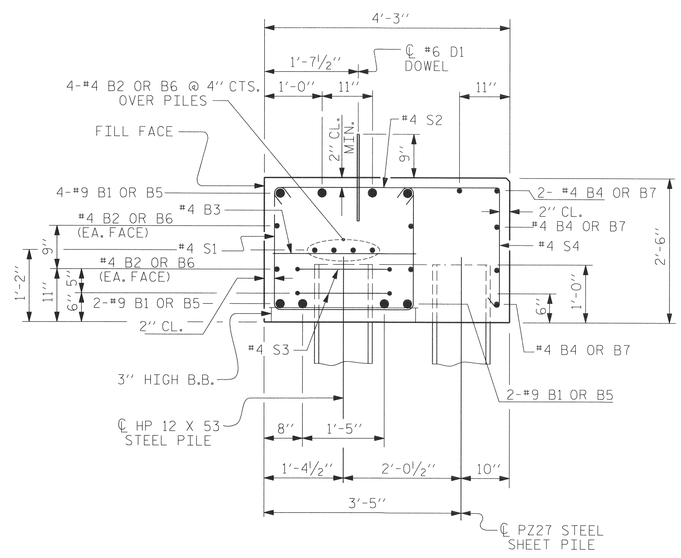

SECTION A-A

PROJECT NO. 17BP.14.R.132

HENDERSON COUNTY

STATION: 12+28.00

SHEET 4 OF 4

NORTH CAROLINA PROFESSIONAL SEAL ENGINEER HARDY L. WILLIS 1/14/14

STATE OF NORTH CAROLINA
DEPARTMENT OF TRANSPORTATION
RALEIGH

SUBSTRUCTURE

END BENT No. 2 DETAILS

REVISIONS						SHEET NO.
NO.	BY:	DATE:	NO.	BY:	DATE:	S-20
1			3			TOTAL SHEETS
2			4			22

ASSEMBLED BY : RTS	DATE : 3/13
CHECKED BY : HLW	DATE : 3/13
DRAWN BY : DGE 03/10	
CHECKED BY : MKT 03/10	

$$$$$$SYSTIME$$$$$
$$$$$$$$$$$$$$$$$$$$$$$$DGN$$$$$$$$$$$$$$$$$$$$$$$
$$$$USERNAME$$$$

STD. NO. EB_30_75S

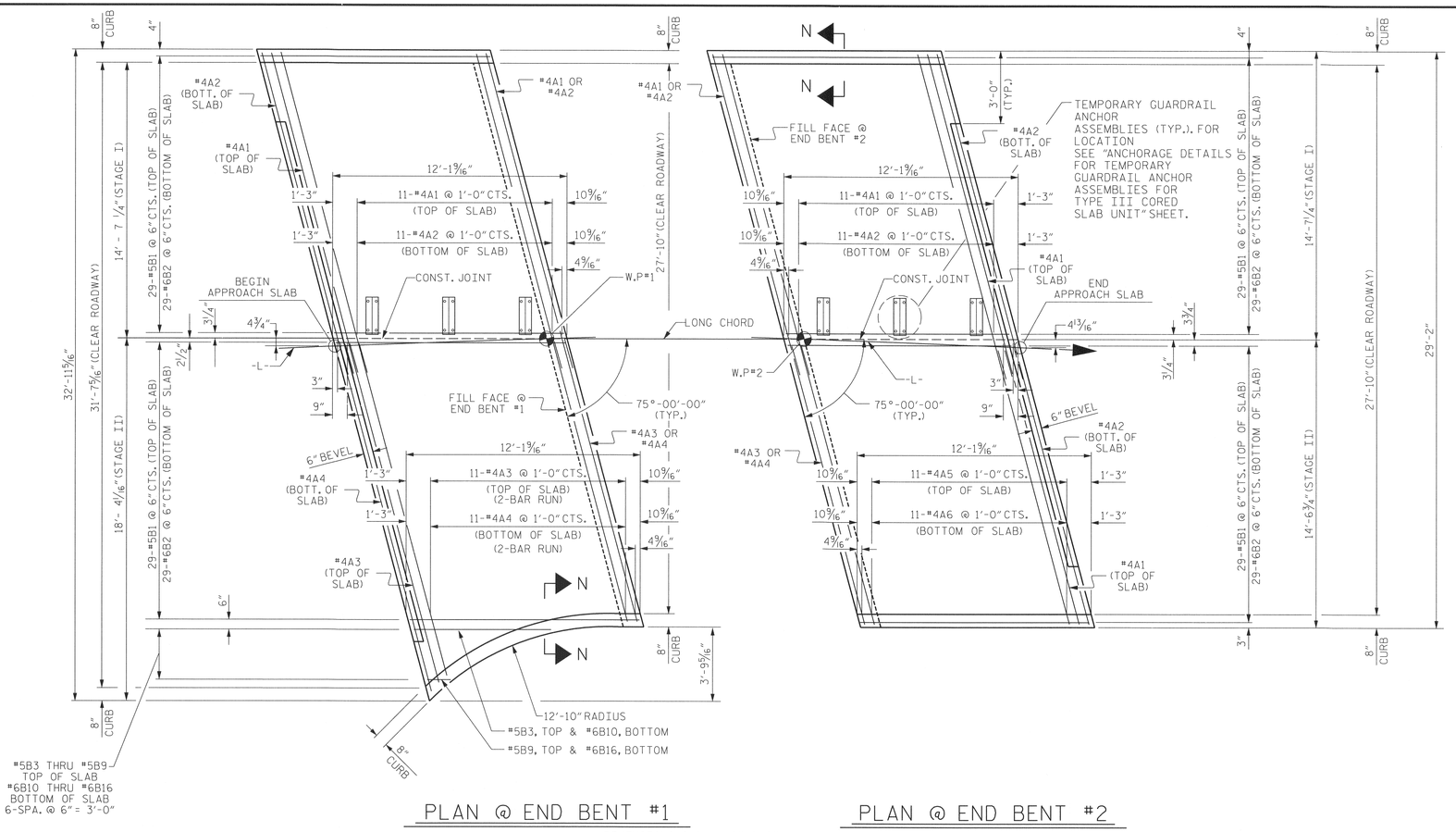

PLAN @ END BENT #1

PLAN @ END BENT #2

DIMENSIONS SHOWN ARE TYPICAL FOR BOTH APPROACH SLABS

BILL OF MATERIAL

APPROACH SLAB AT EB #1 STAGE I

BAR	NO.	SIZE	TYPE	LENGTH	WEIGHT
* A1	13	#4	STR	17'-2"	149
A2	13	#4	STR	16'-11"	147
* B1	29	#5	STR	11'-1"	335
B2	29	#6	STR	11'-7"	505
REINFORCING STEEL				LBS.	652
* EPOXY COATED REINFORCING STEEL				LBS.	484
CLASS AA CONCRETE				C. Y.	8.6

APPROACH SLAB AT EB #1 STAGE II

BAR	NO.	SIZE	TYPE	LENGTH	WEIGHT
* A3	26	#4	STR	10'-4"	179
A4	26	#4	STR	10'-3"	178
* B1	29	#5	STR	6'-3"	335
B2	29	#6	STR	11'-7"	505
* B3	1	#5	STR	6'-3"	7
* B4	1	#5	STR	5'-0"	5
* B5	1	#5	STR	3'-9"	4
* B6	1	#5	STR	2'-11"	3
* B7	1	#5	STR	2'-1"	2
* B8	1	#5	STR	1'-4"	1
* B9	1	#5	STR	8"	1
B10	1	#6	STR	6'-3"	9
B11	1	#6	STR	5'-0"	8
B12	1	#6	STR	3'-9"	6
B13	1	#6	STR	2'-11"	4
B14	1	#6	STR	2'-1"	3
B15	1	#6	STR	1'-4"	2
B16	1	#6	STR	8"	1
REINFORCING STEEL				LBS.	716
* EPOXY COATED REINFORCING STEEL				LBS.	537
CLASS AA CONCRETE				C. Y.	9.3

BILL OF MATERIAL

APPROACH SLAB AT EB #2 STAGE I

BAR	NO.	SIZE	TYPE	LENGTH	WEIGHT
* A1	13	#4	STR	17'-2"	149
A2	13	#4	STR	16'-11"	147
* B1	29	#5	STR	11'-1"	335
B2	29	#6	STR	11'-7"	505
REINFORCING STEEL				LBS.	652
* EPOXY COATED REINFORCING STEEL				LBS.	484
CLASS AA CONCRETE				C. Y.	8.6

APPROACH SLAB AT EB #2 STAGE II

BAR	NO.	SIZE	TYPE	LENGTH	WEIGHT
* A5	13	#4	STR	14'-9"	128
A6	13	#4	STR	14'-9"	128
* B1	29	#5	STR	11'-1"	335
B2	29	#6	STR	11'-7"	505
REINFORCING STEEL				LBS.	633
* EPOXY COATED REINFORCING STEEL				LBS.	463
CLASS AA CONCRETE				C. Y.	8.6

SPLICE LENGTHS

BAR SIZE	EPOXY COATED	UNCOATED
#4	2'-0"	1'-9"
#5	2'-6"	2'-2"
#6	3'-10"	2'-7"

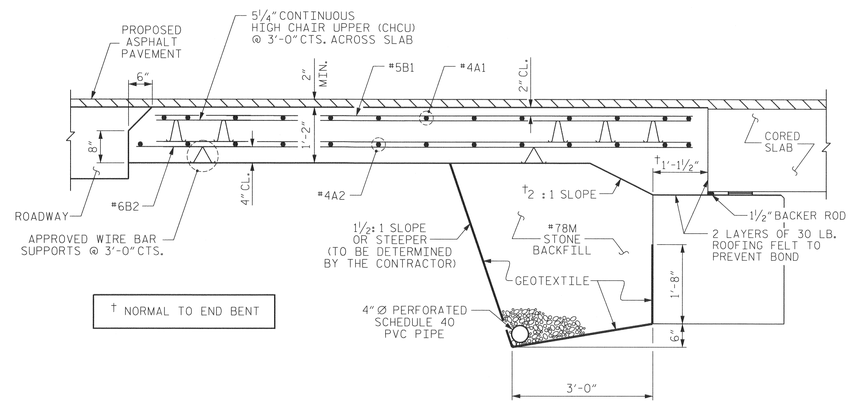

† NORMAL TO END BENT

SECTION THRU SLAB

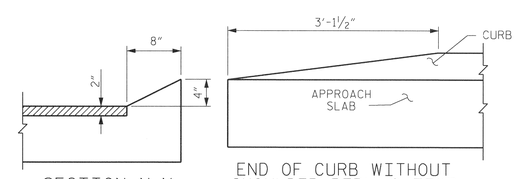

SECTION N-N

END OF CURB WITHOUT SHOULDER BERM GUTTER

CURB DETAILS

NORTH CAROLINA PROFESSIONAL SEAL 20724 ENGINEER HARDY L. WILLIS 1/14/14

PROJECT NO. 17BP.14.R.132

HENDERSON COUNTY

STATION: 12+28.00 -L-

SHEET 1 OF 2

STATE OF NORTH CAROLINA
DEPARTMENT OF TRANSPORTATION
RALEIGH

STANDARD
BRIDGE APPROACH SLAB
FOR PRESTRESSED CONCRETE
CORED SLAB UNIT

REVISIONS						SHEET NO.
NO.	BY:	DATE:	NO.	BY:	DATE:	S-21
1			3			TOTAL SHEETS
2			4			22

ASSEMBLED BY :	CJR	DATE :	11/13
CHECKED BY :	HLW	DATE :	11/13
DRAWN BY : SHS/MAA	5-09	REV. 12-11	MAA/AAC
CHECKED BY : BCH	5-09		

$$$$$$SYSTIME$$$$$
$$$$$$$$$$$$$$$$$$$$$$$$DGN$$$$$$$$$$$$$$$$$$$$$$$
$$$$USERNAME$$$$

STD. NO. BAS_27_75S

NOTES

FOR BRIDGE APPROACH FILL INCLUDING GEOTEXTILE, 4"Ø DRAINAGE PIPE, AND #78M STONE BACKFILL, SEE ROADWAY PLANS.

GEOTEXTILE SHALL BE TYPE 1IN ACCORDANCE WITH THE STANDARD SPECIFICATIONS SECTION 1056.

#78M STONE BACKFILL (CLASS V SELECT MATERIAL) SHALL BE IN ACCORDANCE WITH STANDARD SPECIFICATIONS SECTION 1016.

#78M STONE BACKFILL IS TO BE CONTINUOUS ALONG FILL FACE OF BACKWALL FROM OUTSIDE EDGE TO OUTSIDE EDGE OF APPROACH SLAB.

FOR THE 4"Ø DRAINAGE PIPE OUTLET(S), SEE ROADWAY STANDARD DRAWINGS. THE CONTRACTOR SHALL ENSURE THAT DRAIN PIPE OUTFALL IS ABOVE STREAM ELEVATION.

AREA BETWEEN THE WINGWALL AND APPROACH SLAB SHALL BE GRADED TO DRAIN THE WATER AWAY FROM THE FILL FACE OF THE BRIDGE AND SHALL BE PAVED. SEE ROADWAY PLANS.

APPROACH SLAB GROOVING IS NOT REQUIRED.

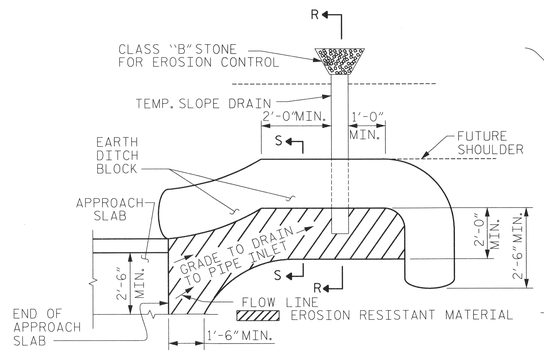

NOTE: IMMEDIATELY AFTER THE CONSTRUCTION OF THE APPROACH SLAB, THE CONTRACTOR SHALL PROVIDE TEMPORARY BERM AND SLOPE DRAIN. CONTRACTOR SHALL GRADE TO PIPE INLET AND PROVIDE EROSION RESISTANT MATERIAL AS SHOWN. THE EROSION RESISTANT MATERIAL SHALL BE EITHER 1) ASPHALT PLANT MIX, TYPE 1 OR TYPE 2, MIN. 2" DEPTH, 2) EROSION CONTROL MAT, OR 3) CONCRETE, AS DIRECTED BY THE ENGINEER. THE SLOPE DRAIN SHALL CONSIST OF A NON-PERFORATED TEMPORARY DRAINAGE PIPE, 12 INCHES IN DIAMETER.

PLAN VIEW

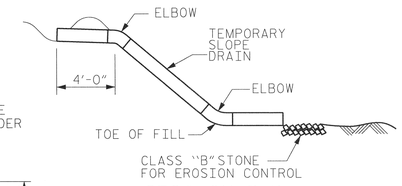

SECTION R-R

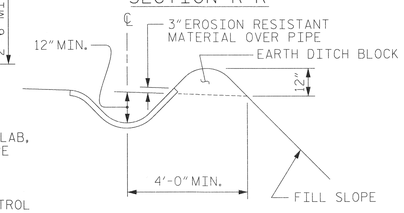

SECTION S-S

TEMPORARY BERM AND SLOPE DRAIN DETAILS

(TO BE USED WHEN SHOULDER BERM GUTTER IS REQUIRED)

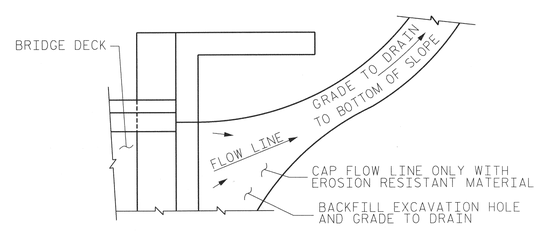

NOTE: IF THE APPROACH SLAB IS NOT CONSTRUCTED IMMEDIATELY AFTER THE BACKFILLING OF THE END BENT EXCAVATION, GRADE TO DRAIN TO THE BOTTOM OF THE SLOPE AND PROVIDE EROSION RESISTANT MATERIAL, SUCH AS FIBERGLASS ROVING OR AS DIRECTED BY THE ENGINEER TO PREVENT SOIL EROSION AND TO PROTECT THE AREA ADJACENT TO THE STRUCTURE. THE CONTRACTOR WILL BE REQUIRED TO REMOVE THESE MATERIALS PRIOR TO CONSTRUCTION OF THE APPROACH SLAB.

TEMPORARY DRAINAGE DETAIL

PROJECT NO. 17BP.14.R.132

HENDERSON COUNTY

STATION: 12+28.00 -L-

SHEET 2 OF 2

STATE OF NORTH CAROLINA
DEPARTMENT OF TRANSPORTATION
RALEIGH

STANDARD
BRIDGE APPROACH SLAB
FOR PRESTRESSED CONCRETE
CORED SLAB UNIT
(SUB-REGIONAL TIER)
75° SKEW

NORTH CAROLINA PROFESSIONAL SEAL 20177 ENGINEER HARDY L. WILLIS
5/6/14

REVISIONS						SHEET NO.
NO.	BY:	DATE:	NO.	BY:	DATE:	22
1			3			TOTAL SHEETS
2			4			22

ASSEMBLED BY :	MAF	DATE :	11/13
CHECKED BY :	HLW	DATE :	11/13
DRAWN BY : SHS/MAA	5-09	REV. 12-11	MAA/AAC
CHECKED BY : BCH	5-09		

$$$$$$SYSTIME$$$$$
$$$$$$$$$$$$$$$$$$$$$$$$DGN$$$$$$$$$$$$$$$$$$$$$$$$

STD. NO. BAS_27_75S

STANDARD NOTES

DESIGN DATA:

SPECIFICATIONS	A.A.S.H.T.O. (CURRENT)
LIVE LOAD	SEE PLANS
IMPACT ALLOWANCE	SEE A.A.S.H.T.O.
STRESS IN EXTREME FIBER OF	
STRUCTURAL STEEL - AASHTO M270 GRADE 36	20,000 LBS. PER SQ. IN.
- AASHTO M270 GRADE 50W	27,000 LBS. PER SQ. IN.
- AASHTO M270 GRADE 50	27,000 LBS. PER SQ. IN.
REINFORCING STEEL IN TENSION	
GRADE 60	24,000 LBS. PER SQ. IN.
CONCRETE IN COMPRESSION	1,200 LBS. PER SQ. IN.
CONCRETE IN SHEAR	SEE A.A.S.H.T.O.
STRUCTURAL TIMBER - TREATED OR	
UNTREATED - EXTREME FIBER STRESS	1,800 LBS. PER SQ. IN.
COMPRESSION PERPENDICULAR TO GRAIN OF TIMBER	375 LBS. PER SQ. IN.
EQUIVALENT FLUID PRESSURE OF EARTH	30 LBS. PER CU. FT. (MINIMUM)

MATERIAL AND WORKMANSHIP:

EXCEPT AS MAY OTHERWISE BE SPECIFIED ON PLANS OR IN THE SPECIAL PROVISIONS, ALL MATERIAL AND WORKMANSHIP SHALL BE IN ACCORDANCE WITH THE 2012 "STANDARD SPECIFICATIONS FOR ROADS AND STRUCTURES" OF THE N. C. DEPARTMENT OF TRANSPORTATION.

STEEL SHEET PILING FOR PERMANENT OR TEMPORARY APPLICATIONS SHALL BE HOT ROLLED.

CONCRETE:

UNLESS OTHERWISE REQUIRED ON PLANS, CLASS A CONCRETE SHALL BE USED FOR ALL PORTIONS OF ALL STRUCTURES WITH THE EXCEPTION THAT: CLASS AA CONCRETE SHALL BE USED IN BRIDGE SUPERSTRUCTURES, ABUTMENT BACKWALLS, AND APPROACH SLABS; AND CLASS B CONCRETE SHALL BE USED FOR SLOPE PROTECTION AND RIP RAP.

CONCRETE CHAMFERS:

UNLESS OTHERWISE NOTED ON THE PLANS, ALL EXPOSED CORNERS ON STRUCTURES SHALL BE CHAMFERED 3/4" WITH THE FOLLOWING EXCEPTIONS: TOP CORNERS OF CURBS MAY BE ROUNDED TO 1-1/2" RADIUS WHICH IS BUILT INTO CURB FORMS; CORNERS OF TRANSVERSE FLOOR EXPANSION JOINTS SHALL BE ROUNDED WITH A 1/4" FINISHING TOOL UNLESS OTHERWISE REQUIRED ON PLANS; AND CORNERS OF EXPANSION JOINTS IN THE ROADWAY FACES AND TOPS OF CURBS AND SIDEWALKS SHALL BE ROUNDED TO A 1/4" RADIUS WITH A FINISHING STONE OR TOOL UNLESS OTHERWISE REQUIRED ON PLANS.

DOWELS:

DOWELS WHEN INDICATED ON PLANS AS FOR CULVERT EXTENSIONS, SHALL BE EMBEDDED AT LEAST 12" INTO THE OLD CONCRETE AND GROUTED INTO PLACE WITH 1:2 CEMENT MORTAR.

ALLOWANCE FOR DEAD LOAD DEFLECTION, SETTLEMENT, ETC. IN CASTING SUPERSTRUCTURES:

BRIDGES SHALL BE BUILT ON THE GRADE OR VERTICAL CURVE SHOWN ON PLANS. SLABS, CURBS AND PARAPETS SHALL CONFORM TO THE GRADE OR CURVE.

ALL DIMENSIONS WHICH ARE GIVEN IN SECTION AND ARE AFFECTED BY DEAD LOAD DEFLECTIONS ARE DIMENSIONS AT CENTER LINE OF BEARING UNLESS OTHERWISE NOTED ON PLANS. IN SETTING FORMS FOR STEEL BEAM BRIDGES AND PRESTRESSED CONCRETE GIRDER BRIDGES, ADJUSTMENTS SHALL BE MADE DUE TO THE DEAD LOAD DEFLECTIONS FOR THE ELEVATIONS SHOWN. WHERE BLOCKS ARE SHOWN OVER BEAMS FOR BUILDING UP TO THE SLAB, THE VERTICAL DIMENSIONS OF THE BLOCKS SHALL BE ADJUSTED BETWEEN BEARINGS TO COMPENSATE FOR DEAD LOAD DEFLECTIONS, VERTICAL CURVE ORDINATE, AND ACTUAL BEAM CAMBER. WHERE BOTTOM OF SLAB IS IN LINE WITH BOTTOM OF TOP FLANGES, DEPTH OF SLAB BETWEEN BEARINGS SHALL BE ADJUSTED TO COMPENSATE FOR DEAD LOAD DEFLECTION, VERTICAL CURVE ORDINATE, AND ACTUAL BEAM CAMBER.

IN SETTING FALSEWORK AND FORMS FOR REINFORCED CONCRETE SPANS, AN ALLOWANCE SHALL BE MADE FOR DEAD LOAD DEFLECTIONS, SETTLEMENT OF FALSEWORK, AND PERMANENT CAMBER WHICH SHALL BE PROVIDED FOR IN ADDITION TO THE ELEVATIONS SHOWN. AFTER REMOVAL OF THE FALSEWORK, THE FINISHED STRUCTURES SHALL CONFORM TO THE PROFILE AND ELEVATIONS SHOWN ON THE PLANS AND CONSTRUCTION ELEVATIONS FURNISHED BY THE ENGINEER.

DETAILED DRAWINGS FOR FALSEWORK OR FORMS FOR BRIDGE SUPERSTRUCTURE AND ANY STRUCTURE OR PARTS OF A STRUCTURE AS NOTED ON THE PLANS SHALL BE SUBMITTED TO THE ENGINEER FOR APPROVAL BEFORE CONSTRUCTION OF THE FALSEWORK OR FORMS IS STARTED.

REINFORCING STEEL:

ALL REINFORCING STEEL SHALL BE DEFORMED. DIMENSIONS RELATIVE TO PLACEMENT OF REINFORCING ARE TO CENTERS OF BARS UNLESS OTHERWISE INDICATED IN THE PLANS. DIMENSIONS ON BAR DETAILS ARE TO CENTERS OF BARS OR ARE OUT TO OUT AS INDICATED ON PLANS.

WIRE BAR SUPPORTS SHALL BE PROVIDED FOR REINFORCING STEEL WHERE INDICATED ON THE PLANS. WHEN BAR SUPPORT PIECES ARE PLACED IN CONTINUOUS LINES, THEY SHALL BE SO PLACED THAT THE ENDS OF THE SUPPORTING WIRES SHALL BE LAPPED TO LOCK LEGS ON ADJOINING PIECES.

STRUCTURAL STEEL:

AT THE CONTRACTOR'S OPTION, HE MAY SUBSTITUTE 7/8" Ø SHEAR STUDS FOR THE 3/4" Ø STUDS SPECIFIED ON THE PLANS. THIS SUBSTITUTION SHALL BE MADE AT THE RATE OF 3 - 7/8" Ø STUDS FOR 4 - 3/4" Ø STUDS, AND STUD SPACING CHANGES SHALL BE MADE AS NECESSARY TO PROVIDE THE SAME EQUIVALENT NUMBER OF 7/8" Ø STUDS ALONG THE BEAM AS SHOWN FOR 3/4" Ø STUDS BASED ON THE RATIO OF 3 - 7/8" Ø STUDS FOR 4 - 3/4" Ø STUDS. STUDS OF THE LENGTH SPECIFIED ON THE PLANS MUST BE PROVIDED. THE MAXIMUM SPACING SHALL BE 2'-0".

EXCEPT AT THE INTERIOR SUPPORTS OF CONTINUOUS BEAMS WHERE THE COVER PLATE IS IN CONTACT WITH BEARING PLATE, THE CONTRACTOR MAY, AT HIS OPTION, SUBSTITUTE FOR THE COVER PLATES DESIGNATED ON THE PLANS COVER PLATES OF THE EQUIVALENT AREA PROVIDED THESE PLATES ARE AT LEAST 5/16" IN THICKNESS AND DO NOT EXCEED A WIDTH EQUAL TO THE FLANGE WIDTH LESS 2" OR A THICKNESS EQUAL TO 2 TIMES THE FLANGE THICKNESS. THE SIZE OF FILLET WELDS SHALL CONFORM TO THE REQUIREMENTS OF THE CURRENT ANSI/AASHTO/AWS "BRIDGE WELDING CODE". ELECTROSLAG WELDING WILL NOT BE PERMITTED.

WITH THE SOLE EXCEPTION OF EDGES AT SURFACES WHICH BEAR ON OTHER SURFACES, ALL SHARP EDGES AND ENDS OF SHAPES AND PLATES SHALL BE SLIGHTLY ROUNDED BY SUITABLE MEANS TO A RADIUS OF APPROXIMATELY 1/16 INCH OR EQUIVALENT FLAT SURFACE AT A SUITABLE ANGLE PRIOR TO PAINTING, GALVANIZING, OR METALLIZING.

HANDRAILS AND POSTS:

METAL STANDARDS AND FACES OF THE CONCRETE END POSTS FOR THE METAL RAIL SHALL BE SET NORMAL TO THE GRADE OF THE CURB, UNLESS OTHERWISE SHOWN ON PLANS. THE METAL RAIL AND TOPS OF CONCRETE POSTS USED WITH THE ALUMINUM RAIL SHALL BE BUILT PARALLEL TO THE GRADE OF THE CURB.

METAL HANDRAILS SHALL BE IN ACCORDANCE WITH THE PLANS. RAILS SHALL BE AS MANUFACTURED FOR BRIDGE RAILING. CASTINGS SHALL BE OF A UNIFORM APPEARANCE. FINS AND OTHER DEFORMATIONS RESULTING FROM CASTING OR OTHERWISE SHALL BE REMOVED IN A MANNER SO THAT A UNIFORM COLORING OF THE COMPLETED CASTING SHALL BE OBTAINED. CASTINGS WITH DISCOLORATIONS OR OF NON-UNIFORM COLORING WILL NOT BE ACCEPTED. CERTIFIED MILL REPORTS ARE REQUIRED FOR METAL RAILS AND POSTS.

SPECIAL NOTES:

GENERALLY, IN CASE OF DISCREPANCY, THIS STANDARD SHEET OF NOTES SHALL GOVERN OVER THE SPECIFICATIONS, BUT THE REMAINDER OF THE PLANS SHALL GOVERN OVER NOTES HEREON, AND SPECIAL PROVISIONS SHALL GOVERN OVER ALL. SEE SPECIFICATIONS ARTICLE 105-4.

ENGLISH

JANUARY, 1990

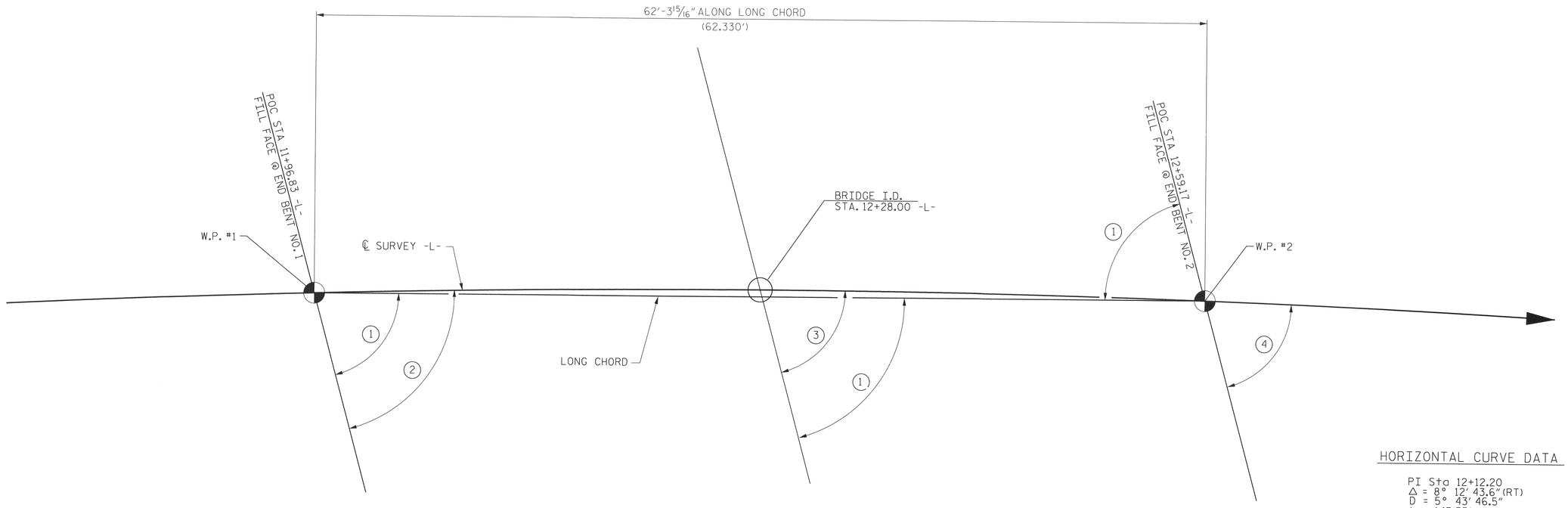

HORIZONTAL CURVE DATA

PI Sta 12+12.20
Δ = 8° 12' 43.6" (RT)
D = 5° 43' 46.5"
L = 143.33'
T = 71.79'
R = 1,000.00'

LONG CHORD LAYOUT

END BENTS ARE PARALLEL.

1. 75°00'00" TO LONG CHORD
2. 76°47'09" TAN TO CURVE, ℄ SURVEY -L-
3. 75°00'00" TAN TO CURVE, ℄ SURVEY -L-
4. 73°12'51" TAN TO CURVE, ℄ SURVEY -L-

NORTH CAROLINA PROFESSIONAL SEAL ENGINEER HARDY L. WILLIS 11/14/14

PROJECT NO. 17BP.14.R.132

HENDERSON COUNTY

STATION: 12+28.00 -L-

SHEET 2 OF 3

V&M Vaughn & Melton Consulting Engineers
Charlotte, North Carolina 704-357-0488
Tri-Cities, Tennessee 423-467-8401
Knoxville, Tennessee 865-546-5800
Asheville, North Carolina 828-253-2796
Middlesboro, Kentucky 606-248-6600
Spartanburg, South Carolina 864-574-4775

Copyright © 2006 Vaughn & Melton, Inc. All Rights Reserved

STATE OF NORTH CAROLINA
DEPARTMENT OF TRANSPORTATION
RALEIGH

LONG CHORD LAYOUT

BRIDGE ON SR 1215
(TURLEY FALLS RD.) OVER SHAW CREEK
BETWEEN SR. 1214 AND US 64.

DWN. BY: CJR DATE: 11/2013
CHKD. BY: HLW DATE: 11/2013
ENG. OF REC.: RTS DATE: 11/2013

REVISIONS						
NO.	BY:	DATE:	NO.	BY:	DATE:	
1			3			
2			4			

SHEET NO. S-2

TOTAL SHEETS 22

BM #2: N 593166 E 950403 -BL- STA 10+16.70 36.58' LT ELEV. 2124.77' NAIL IN BASE OF UTILITY POLE

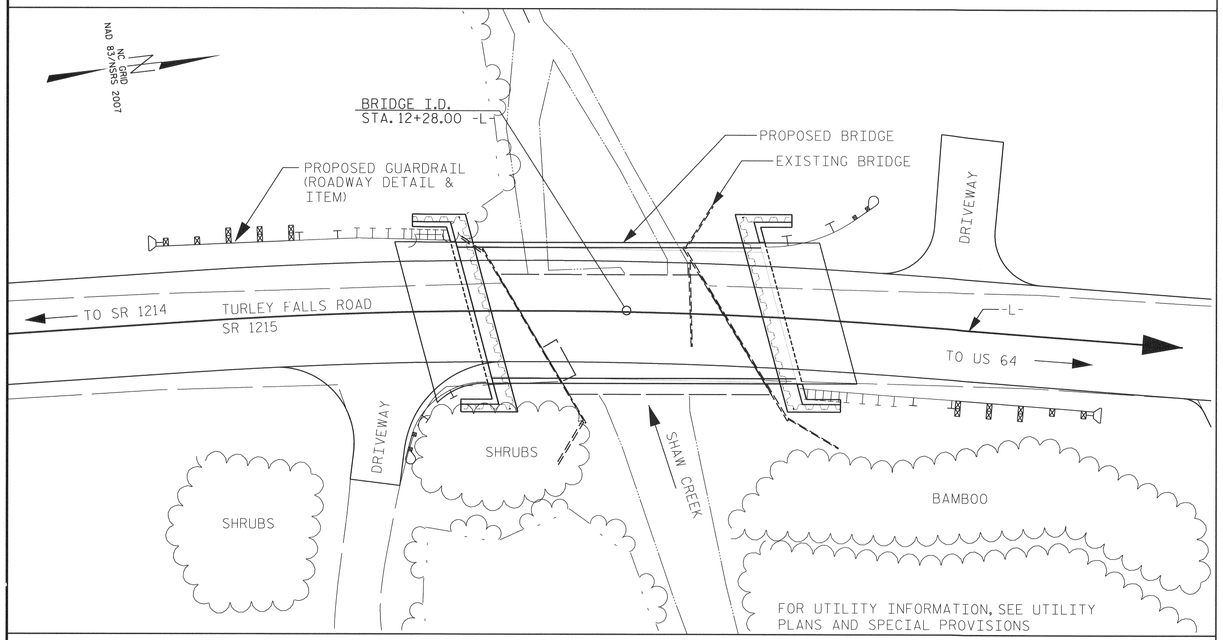

LOCATION SKETCH

GENERAL NOTES:

ASSUMED LIVE LOAD = HL-93 OR ALTERNATE LOADING.

THIS BRIDGE HAS BEEN DESIGNED IN ACCORDANCE WITH THE REQUIREMENTS OF THE AASHTO LRFD BRIDGE DESIGN SPECIFICATIONS.

THIS BRIDGE IS LOCATED IN SEISMIC ZONE 1.

FOR OTHER DESIGN DATA AND GENERAL NOTES, SEE SHEET SN.

FOR EROSION CONTROL MEASURES, SEE EROSION CONTROL PLANS.

THE EXISTING STRUCTURE, CONSISTING OF A SINGLE SPAN, 41.3-FOOT LONG TIMBER DECK ON STEEL I-BEAMS, 24.0 FEET WIDE, ON TIMBER VERTICAL END BENTS AND LOCATED AT THE PROPOSED STRUCTURE, SHALL BE REMOVED. THE EXISTING BRIDGE IS PRESENTLY POSTED BELOW THE LEGAL LOAD LIMIT. SHOULD THE STRUCTURAL INTEGRITY OF THE BRIDGE FURTHER DETERIORATE, THIS LOAD LIMITATION MAY BE REDUCED AS FOUND NECESSARY DURING THE LIFE OF THE PROJECT.

REMOVAL OF THE EXISTING BRIDGE SHALL BE PERFORMED SO AS NOT TO ALLOW DEBRIS TO FALL INTO THE WATER. THE CONTRACTOR SHALL REMOVE THE BRIDGE AND SUBMIT PLANS FOR DEMOLITION IN ACCORDANCE WITH ARTICLE 402-2 OF THE STANDARD SPECIFICATIONS.

THE SUBSTRUCTURE OF THE EXISTING BRIDGE INDICATED ON THE PLANS IS FROM THE BEST INFORMATION AVAILABLE. SINCE THIS INFORMATION IS SHOWN FOR THE CONVENIENCE OF THE CONTRACTOR, THE CONTRACTOR SHALL HAVE NO CLAIM WHATSOEVER AGAINST THE DEPARTMENT OF TRANSPORTATION FOR ANY DELAYS OR ADDITIONAL COST INCURRED BASED ON DIFFERENCES BETWEEN THE EXISTING BRIDGE SUBSTRUCTURE SHOWN ON THE PLANS AND THE ACTUAL CONDITIONS AT THE PROJECT SITE.

THIS STRUCTURE HAS BEEN DESIGNED IN ACCORDANCE WITH "HEC 18 - EVALUATING SCOUR AT BRIDGES".

FOR SUBMITTAL OF WORKING DRAWINGS, SEE SPECIAL PROVISIONS.

FOR FALSEWORK AND FORMWORK, SEE SPECIAL PROVISIONS.

FOR CRANE SAFETY, SEE SPECIAL PROVISIONS.

FOR GROUT FOR STRUCTURES, SEE SPECIAL PROVISIONS.

THE MATERIAL SHOWN IN THE CROSS-HATCHED AREA SHALL BE EXCAVATED FOR A DISTANCE OF 25 FT. EACH SIDE OF CENTERLINE ROADWAY AS DIRECTED BY THE ENGINEER. THIS WORK WILL BE PAID FOR AT THE CONTRACT LUMP SUM PRICE FOR UNCLASSIFIED STRUCTURE EXCAVATION. SEE SECTION 412 OF THE STANDARD SPECIFICATIONS.

ASPHALT WEARING SURFACE IS INCLUDED IN ROADWAY QUANTITY ON ROADWAY PLANS.

INASMUCH AS THE PAINT SYSTEM ON THE EXISTING STRUCTURAL STEEL CONTAINS LEAD, THE CONTRACTOR'S ATTENTION IS DIRECTED TO ARTICLE 107-1 OF THE STANDARD SPECIFICATIONS. ANY COSTS RESULTING FROM COMPLIANCE WITH APPLICABLE STATE OR FEDERAL REGULATIONS PERTAINING TO HANDLING OF MATERIALS CONTAINING LEAD BASED PAINT SHALL BE INCLUDED IN THE BID PRICE FOR "REMOVAL OF EXISTING STRUCTURE AT STATION 12+28.00-L-.

THE CONTRACTOR SHALL PROVIDE INDEPENDENT ASSURANCE SAMPLES OF REINFORCING STEEL AS FOLLOWS: FOR PROJECTS REQUIRING UP TO 400 TONS OF REINFORCING STEEL, ONE 30 INCH SAMPLE OF EACH SIZE BAR USED, AND FOR PROJECTS REQUIRING OVER 400 TONS OF REINFORCING STEEL, TWO 30 INCH SAMPLES OF EACH SIZE BAR USED. THE BARS FROM WHICH THE SAMPLES ARE TAKEN MUST THEN BE SPLICED WITH REPLACEMENT BARS OF THE SIZE AND LENGTH OF THE SAMPLE, PLUS A MINIMUM LAP SPLICE OF THIRTY BAR DIAMETERS. PAYMENT FOR THE SAMPLES OF REINFORCING STEEL SHALL BE CONSIDERED INCIDENTAL TO VARIOUS PAY ITEMS.

FOUNDATION NOTES:

FOR PILES, SEE SECTION 450 OF THE STANDARD SPECIFICATIONS.

PILES AT END BENT NO. 1 AND END BENT NO. 2 ARE DESIGNED FOR A FACTORED RESISTANCE OF 90 TONS PER PILE.

DRIVE PILES AT END BENT NO. 1 AND END BENT NO. 2 TO A REQUIRED DRIVING RESISTANCE OF 150 TONS PER PILE.

TESTING PILES WITH THE PDA DURING DRIVING, RESTRIKING OR REDRIVING MAY BE REQUIRED. THE ENGINEER WILL DETERMINE THE NEED FOR PDA TESTING. FOR PDA TESTING, SEE SECTION 450 OF THE STANDARD SPECIFICATIONS (AND FOR PILE DRIVING CRITERIA, SEE DRIVING CRITERIA PROVISION).

FOR STEEL SHEET PILES, SEE SECTION 1084 OF THE STANDARD SPECIFICATIONS.

PZ 27 SHEETING IS TO BE DRIVEN IN FRONT (STREAM SIDE) OF THE HP 12 X 53 PILES AT END BENT NO. 1 AND END BENT NO. 2 AS SHOWN IN THE STRUCTURE PLANS.

AT END BENT NO. 1 AND END BENT NO. 2, SHEET PILES SHOULD BE DRIVEN TO AN ELEVATION NO HIGHER THAN 2095.0 FT.

THE SCOUR CRITICAL ELEVATION FOR END BENT NO. 1 IS ELEVATION 2098.0 FT. AND FOR END BENT NO. 2 IS ELEVATION 2097.0 FT. SCOUR CRITICAL ELEVATIONS ARE USED TO MONITOR POSSIBLE SCOUR PROBLEMS DURING THE LIFE OF THE STRUCTURE.

HYDRAULIC DATA

DESIGN DISCHARGE	= 750	CFS
DESIGN FREQUENCY	= 25	YRS
DESIGN HW ELEVATION	= 2112.7	FT
BASE DISCHARGE	= 1240	CFS
BASE FREQUENCY	= 100	YRS
BASE HW ELEVATION	= 2114.30	FT

OVERTOPPING FLOOD DATA

OVERTOPPING DISCHARGE	= 1835	CFS
OVERTOPPING FREQUENCY	= 500	YRS+
OVERTOPPING ELEVATION	= 2115.9	FT
DRAINAGE AREA	= 2.3	SQ. MI

TOTAL BILL OF MATERIAL

	REMOVAL OF EXISTING STRUCTURE	UNCLASSIFIED STRUCTURE EXCAVATION	CLASS A CONCRETE	BRIDGE APPROACH SLABS	REINFORCING STEEL	HP 12 X 53 STEEL PILES		18" STEEL SHEET PILES	VERTICAL CONCRETE BARRIER RAIL	ELASTOMERIC BEARINGS	3'-0" x 2'-0" PRESTRESSED CONCRETE CORED SLABS	
	LUMP SUM	LUMP SUM	CU. YARDS	LUMP SUM		NO.	LIN. FT.	SQ. FT.	LIN. FT.	LUMP SUM	NO.	LIN. FT.
SUPERSTRUCTURE				LUMP SUM					120.26	LUMP SUM	10	600.0
END BENT 1		LUMP SUM	20.8		2582	5	160	994				
END BENT 2		LUMP SUM	20.8		2582	5	235	1009				
TOTAL	LUMP SUM	LUMP SUM	41.6	LUMP SUM	5164	10	395	2003	120.26	LUMP SUM	10	600.0

NORTH CAROLINA PROFESSIONAL SEAL ENGINEER HARDY L. WILLIS 11/14/14

PROJECT NO. 17BP.14.R.132

HENDERSON COUNTY

STATION: 12+28.00 -L-

SHEET 3 OF 3

V&M Vaughn & Melton Consulting Engineers
Asheville, North Carolina 828-253-2796
Charlotte, North Carolina 704-357-0488
Tri-Cities, Tennessee 423-467-8401
Knoxville, Tennessee 865-546-5800
Middlesboro, Kentucky 606-248-6600
Spartanburg, South Carolina 864-574-4775

Copyright © 2006 Vaughn & Melton, Inc. All Rights Reserved

STATE OF NORTH CAROLINA
DEPARTMENT OF TRANSPORTATION
RALEIGH

GENERAL DRAWING
BRIDGE ON SR 1215
(TURLEY FALLS RD.) OVER SHAW CREEK
BETWEEN SR. 1214 AND US 64.

DWN. BY: CJR DATE: 11/2013
CHKD. BY: HLW DATE: 11/2013
ENG. OF REC.: RTS DATE: 11/2013

REVISIONS						SHEET NO.
NO.	BY:	DATE:	NO.	BY:	DATE:	S-3
1			3			TOTAL SHEETS
2			4			22

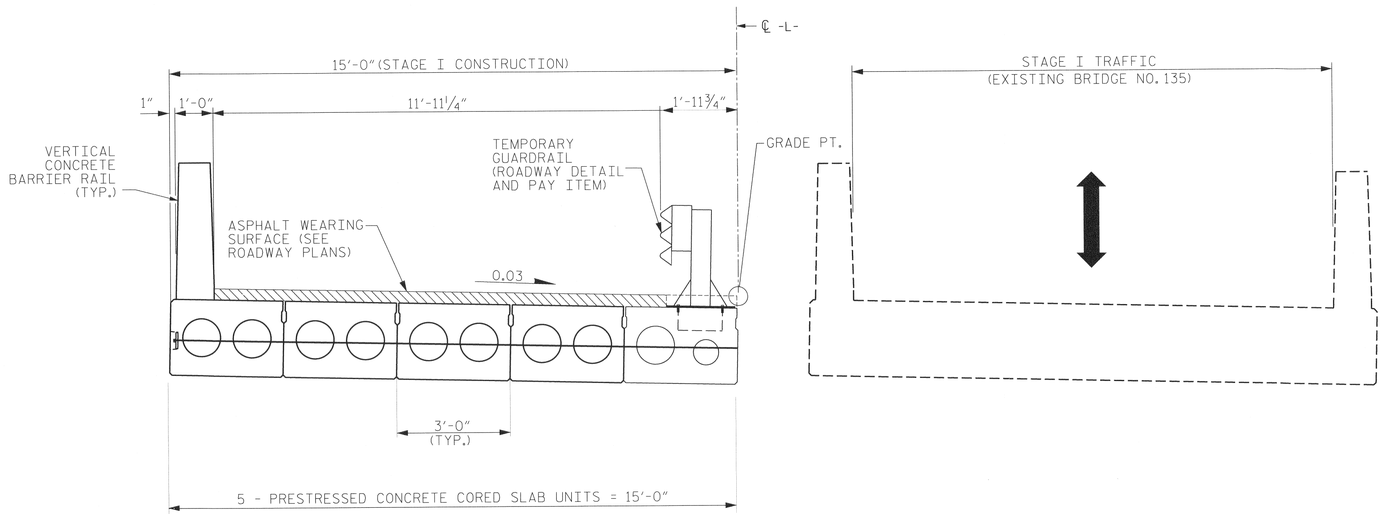

STAGE I

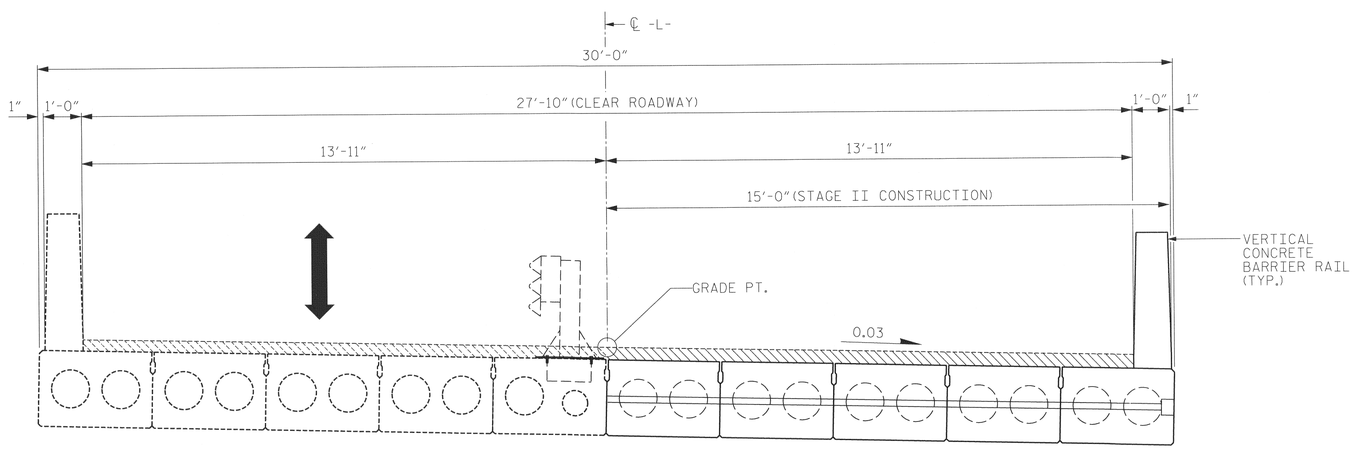

STAGE II

STAGING SEQUENCE

NOTES

FOR TEMPORARY GUARDRAIL DETAILS, SEE "ANCHORAGE DETAILS FOR TEMPORARY GUARDRAIL ANCHOR ASSEMBLY FOR TYPE IV CORED SLAB UNIT" SHEET (S-11).

FOR PHASING OF TRAFFIC, SEE TRAFFIC MANAGEMENT PLANS.

NORTH CAROLINA PROFESSIONAL SEAL ENGINEER HARDY L. WILLIS 11/14/14

PROJECT NO. 17BP.14.R.132

HENDERSON COUNTY

STATION: 12+28.00 -L-

V&M Vaughn & Melton Consulting Engineers

Asheville, North Carolina 828-253-2796
Charlotte, North Carolina 704-357-0488
Tri-Cities, Tennessee 423-467-8410
Knoxville, Tennessee 865-546-5800
Middlesboro, Kentucky 606-248-6600
Spartanburg, South Carolina 864-574-4775

Copyright © 2006 Vaughn & Melton, Inc. All Rights Reserved

STATE OF NORTH CAROLINA
DEPARTMENT OF TRANSPORTATION
RALEIGH

CONSTRUCTION STAGING

DWN. BY: CJR DATE: 11/2013
CHKD. BY: HLW DATE: 11/2013
ENG. OF REC.: RTS DATE: 11/2013

REVISIONS					
NO.	BY:	DATE:	NO.	BY:	DATE:
1			3		
2			4		

SHEET NO. S-4

TOTAL SHEETS 22

LOAD AND RESISTANCE FACTOR RATING (LRFD) SUMMARY FOR PRESTRESSED CONCRETE GIRDERS

LEVEL		VEHICLE	WEIGHT (W) (TONS)	CONTROLLING LOAD RATING	MINIMUM RATING FACTORS (RF)	TONS = W X RF	STRENGTH I LIMIT STATE											SERVICE III LIMIT STATE						COMMENT NUMBER
							LIVELOAD FACTORS	MOMENT					SHEAR					LIVELOAD FACTORS	MOMENT					
								DISTRIBUTION FACTORS (DF)	RATING FACTOR	SPAN	GIRDER LOCATION	DISTANCE FROM LEFT END OF SPAN (ft)	DISTRIBUTION FACTORS (DF)	RATING FACTOR	SPAN	GIRDER LOCATION	DISTANCE FROM LEFT END OF SPAN (ft)		DISTRIBUTION FACTORS (DF)	RATING FACTOR	SPAN	GIRDER LOCATION	DISTANCE FROM LEFT END OF SPAN (ft)	
DESIGN LOAD RATING		HL-93(Inv)	N/A	1	1.128	--	1.75	0.27	1.35	60'	EL	29.482	0.608	**1.13**	60'	EL	**2.948**	0.80	0.27	1.39	60'	EL	29.482	
		HL-93(Opr)	N/A	--	1.463	--	1.35	0.27	1.76	60'	EL	29.482	0.608	1.46	60'	EL	2.948	N/A	--	--	--	--	--	
		HS-20(Inv)	36.000	2	1.381	49.722	1.75	0.27	1.72	60'	EL	29.482	0.608	**1.38**	60'	EL	**2.948**	0.80	0.27	1.76	60'	EL	29.482	
		HS-20(Opr)	36.000	--	1.79	64.455	1.35	0.27	2.22	60'	EL	29.482	0.608	1.79	60'	EL	2.948	N/A	--	--	--	--	--	
LEGAL LOAD RATING	SV	SNSH	13.500	--	3.791	51.185	1.4	0.27	4.62	60'	EL	29.482	0.608	4.02	60'	EL	2.948	0.80	0.27	3.79	60'	EL	29.482	
		SNGARBS2	20.000	--	2.888	57.751	1.4	0.27	3.53	60'	EL	29.482	0.608	2.89	60'	EL	2.948	0.80	0.27	2.90	60'	EL	29.482	
		SNAGRIS2	22.000	--	2.691	59.194	1.4	0.27	3.39	60'	EL	29.482	0.608	2.69	60'	EL	2.948	0.80	0.27	2.78	60'	EL	29.482	
		SNCOTTS3	27.250	--	1.889	51.473	1.4	0.27	2.3	60'	EL	29.482	0.608	2.01	60'	EL	2.948	0.80	0.27	1.89	60'	EL	29.482	
		SNAGGRS4	34.925	--	1.608	56.157	1.4	0.27	1.96	60'	EL	29.482	0.608	1.69	60'	EL	2.948	0.80	0.27	1.61	60'	EL	29.482	
		SNS5A	35.550	--	1.57	55.826	1.4	0.27	1.91	60'	EL	29.482	0.608	1.72	60'	EL	2.948	0.80	0.27	1.57	60'	EL	29.482	
		SNS6A	39.950	--	1.453	58.064	1.4	0.27	1.77	60'	EL	29.482	0.608	1.58	60'	EL	2.948	0.80	0.27	1.45	60'	EL	29.482	
		SNS7B	42.000	--	1.385	58.152	1.4	0.27	1.69	60'	EL	29.482	0.608	1.56	60'	EL	2.948	0.80	0.27	1.38	60'	EL	29.482	
	TTST	TNAGRIT3	33.000	--	1.776	58.612	1.4	0.27	2.16	60'	EL	29.482	0.608	1.87	60'	EL	2.948	0.80	0.27	1.78	60'	EL	29.482	
		TNT4A	33.075	--	1.787	59.12	1.4	0.27	2.18	60'	EL	29.482	0.608	1.81	60'	EL	2.948	0.80	0.27	1.79	60'	EL	29.482	
		TNT6A	41.600	--	1.474	61.31	1.4	0.27	1.79	60'	EL	29.482	0.608	1.68	60'	EL	2.948	0.80	0.27	1.47	60'	EL	29.482	
		TNT7A	42.000	--	1.488	62.489	1.4	0.27	1.81	60'	EL	29.482	0.608	1.62	60'	EL	2.948	0.80	0.27	1.49	60'	EL	29.482	
		TNT7B	42.000	--	1.515	63.636	1.4	0.27	1.89	60'	EL	29.482	0.608	1.52	60'	EL	2.948	0.80	0.27	1.55	60'	EL	29.482	
		TNAGRIT4	43.000	--	1.464	62.958	1.4	0.27	1.79	60'	EL	29.482	0.608	1.46	60'	EL	2.948	0.80	0.27	1.47	60'	EL	29.482	
		TNAGT5A	45.000	--	1.378	62.016	1.4	0.27	1.68	60'	EL	29.482	0.608	1.47	60'	EL	2.948	0.80	0.27	1.38	60'	EL	29.482	
		TNAGT5B	45.000	3	1.356	61.038	1.4	0.27	1.65	60'	EL	29.482	0.608	1.39	60'	EL	2.948	0.80	0.27	**1.36**	60'	EL	**29.482**	

LOAD FACTORS:

DESIGN LOAD RATING FACTORS	LIMIT STATE	γ_{DC}	γ_{DW}
	STRENGTH I	1.25	1.50
	SERVICE III	1.00	1.00

NOTES:

MINIMUM RATING FACTORS ARE BASED ON THE STRENGTH I AND SERVICE III LIMIT STATES.

ALLOWABLE STRESSES FOR SERVICE III LIMIT STATE ARE AS REQUIRED FOR DESIGN.

COMMENTS:

1.
2.
3.
4.

(#) CONTROLLING LOAD RATING
(1) DESIGN LOAD RATING (HL-93)
(2) DESIGN LOAD RATING (HS-20)
(3) LEGAL LOAD RATING **
** SEE CHART FOR VEHICLE TYPE
GIRDER LOCATION
I - INTERIOR GIRDER
EL - EXTERIOR LEFT GIRDER
ER - EXTERIOR RIGHT GIRDER

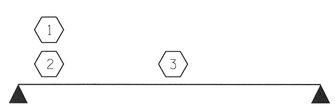

LRFR SUMMARY

FOR SINGLE SPAN

PROJECT NO. 17BP.14.R.132

HENDERSON COUNTY

STATION: 12+28.00 -L-

NORTH CAROLINA PROFESSIONAL SEAL 027 ENGINEER HARDY L. WILLIS 11/4/14

STATE OF NORTH CAROLINA
DEPARTMENT OF TRANSPORTATION
RALEIGH

STANDARD

LRFR SUMMARY FOR 60' CORED SLAB UNIT 75° SKEW & 105° SKEW (NON-INTERSTATE TRAFFIC)

REVISIONS						SHEET NO.
NO.	BY:	DATE:	NO.	BY:	DATE:	S-5
1			3			TOTAL SHEETS
2			4			22

ASSEMBLED BY :	RTS	DATE : 11/2013
CHECKED BY :	HLW	DATE : 11/2013
DRAWN BY : CVC	6/10	
CHECKED BY : DNS	6/10	

$$$$$$SYSTIME$$$$$
$$$$$$$$$$$$$$$$$$$$$$DGN$$$$$$$$$$$$$$$$$$$$$$
$$$$USERNAME$$$$

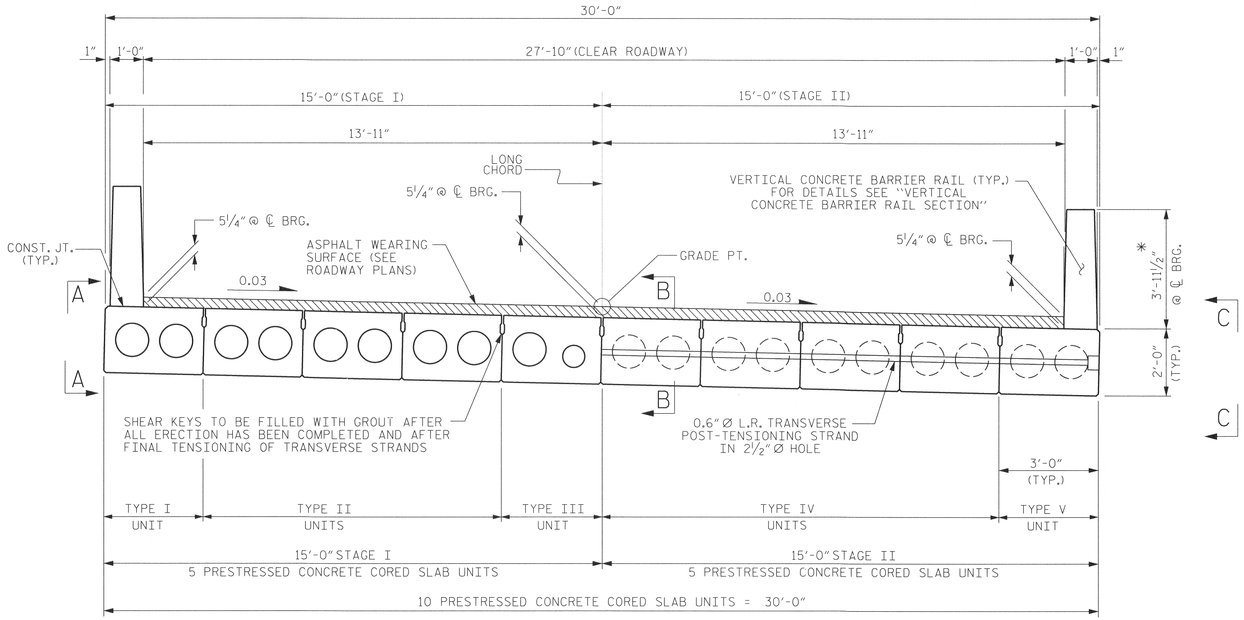

HALF SECTION
THROUGH VOIDS

HALF SECTION
AT INTERMEDIATE DIAPHRAGMS

TYPICAL SECTION

* -THE MAXIMUM BARRIER RAIL HEIGHT AND ASPHALT THICKNESS IS SHOWN. THE HEIGHT OF THE BARRIER RAIL AND ASPHALT THICKNESS VARIES WHILE THE TOP OF THE BARRIER RAIL FOLLOWS THE PROFILE OF THE GUTTERLINE. FOR RAIL HEIGHT DETAILS AND ASPHALT THICKNESS, SEE THE "VERTICAL CONCRETE BARRIER RAIL SECTION" DETAIL.

◈ BOND SHALL BE BROKEN ON THESE STRANDS FOR A DISTANCE OF 12'-0" FROM END OF CORED SLAB UNIT. SEE STANDARD SPECIFICATIONS, ARTICLE 1078-7.

◉ OPTIONAL FULL LENGTH DEBONDED STRANDS. THESE STRANDS ARE NOT REQUIRED. IF THE FABRICATOR CHOOSES TO INCLUDE THESE STRANDS IN THE CORED SLAB UNIT, THE STRANDS SHALL BE DEBONDED FOR THE FULL LENGTH OF THE UNIT AT NO ADDITIONAL COST. SEE STANDARD SPECIFICATIONS, ARTICLE 1078-7.

DEBONDING LEGEND

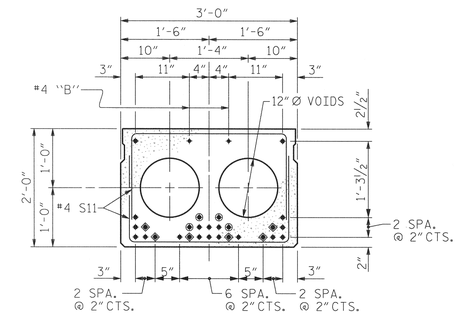

INTERIOR SLAB SECTION FOR 60' UNIT
(TYPE II & IV)
(24 STRANDS REQUIRED)

0.6" Ø LOW RELAXATION STRAND LAYOUT

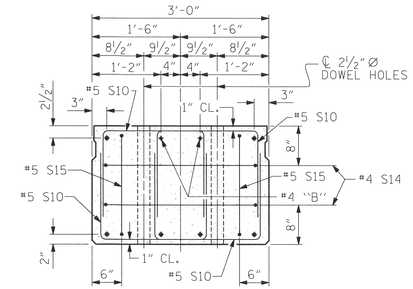

END ELEVATION

SHOWING PLACEMENT OF DOUBLE STIRRUPS AND LOCATION OF DOWEL HOLES. (STRAND LAYOUT NOT SHOWN.) INTERIOR SLAB UNIT SHOWN-EXTERIOR SLAB UNIT SIMILAR EXCEPT SHEAR KEY LOCATION.

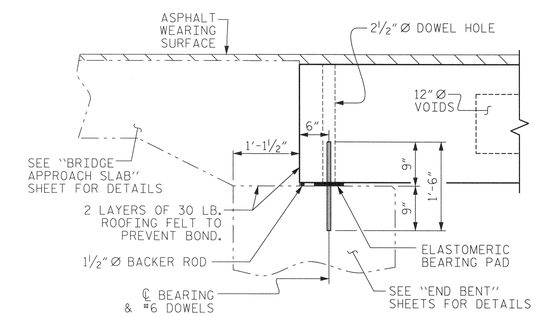

SECTION AT END BENT

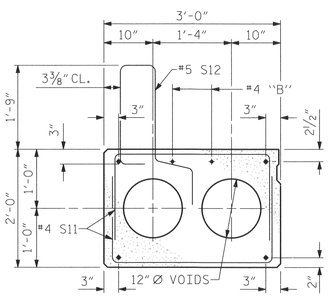

TYPE I AND V SLAB DETAIL

(FOR PRESTRESSED STRAND LAYOUT, SEE INTERIOR SLAB SECTION.)

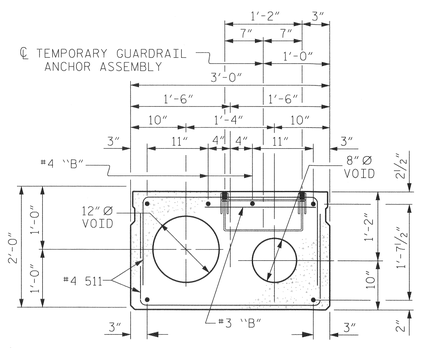

INTERIOR SLAB SECTION

(TYPE III)

(FOR PRESTRESSED STRAND LAYOUT, SEE "INTERIOR SLAB SECTION - FOR 60' UNIT"

FOR TEMPORARY GUARDRAIL ANCHOR ASSEMBLY LOCATION, SEE SECTION OF ANCHOR ASSEMBLY LOCATION ON "ANCHORAGE DETAILS FOR TEMPORARY GUARDRAIL ANCHOR ASSEMBLY FOR TYPE III CORED SLAB UNIT" SHEET.

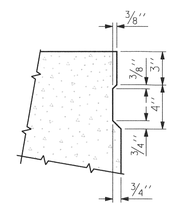

SHEAR KEY DETAIL

NOTE: OMIT SHEAR KEY ON OUTSIDE FACE OF EXTERIOR CORED SLABS.

NORTH CAROLINA PROFESSIONAL SEAL ENGINEER HARDY L. WILLIS 11/14/14

PROJECT NO. 17BP.14.R.132
HENDERSON COUNTY
STATION: 12+28.00 -L-

SHEET 1 OF 5

STATE OF NORTH CAROLINA
DEPARTMENT OF TRANSPORTATION
RALEIGH

3'-0" X 2'-0" PRESTRESSED CONCRETE CORED SLAB UNIT

ASSEMBLED BY :	RTS	DATE : 11/2013	
CHECKED BY :	HLW	DATE : 11/2013	
DRAWN BY : MAA	6/10	REV. 12/11	MAA/AAC
CHECKED BY : MKT	7/10		

REVISIONS							SHEET NO.
NO.	BY:	DATE:	NO.	BY:	DATE:		S-6
1			3				TOTAL SHEETS
2			4				22

$$$$$$$SYSTIME$$$$$
$$$$$$$$$$$$$$$$$$$$$$DGN$$$$$$$$$$$$$$$$$$$$$$
$$$$USERNAME$$$$

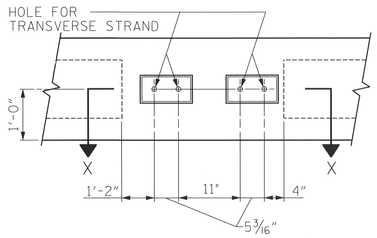

VIEW A-A
SEE SHEET 1 OF 5

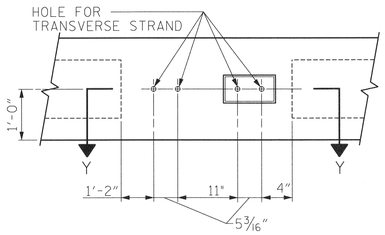

VIEW B-B
SEE SHEET 1 OF 5

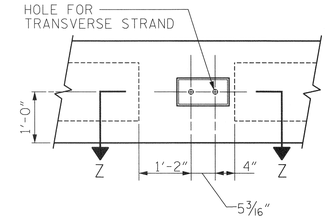

VIEW C-C
SEE SHEET 1 OF 5

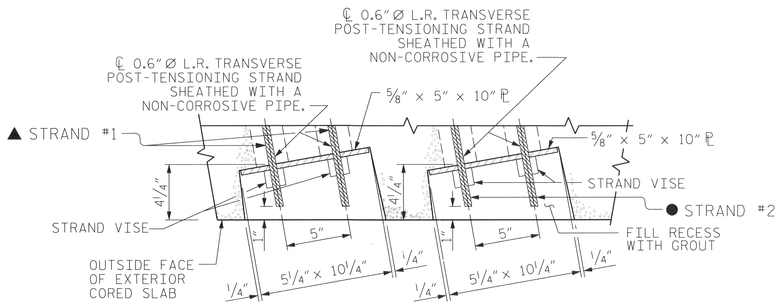

SECTION X-X
(TYPE I UNIT)

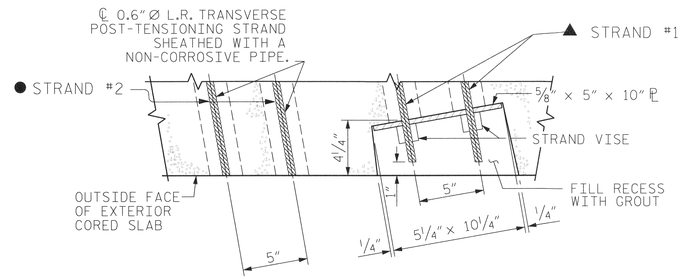

SECTION Y-Y
(TYPE III UNIT)

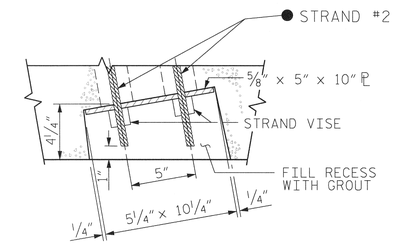

SECTION Z-Z
(TYPE V UNIT)

GROUTED RECESS AT END OF POST-TENSIONED STRAND

▲ STRANDS #1 GO THROUGH 5 CORED SLAB UNITS (TO BE TENSIONED DURING STAGE I CONSTRUCTION).

● STRANDS #2 GO THROUGH ALL 10 CORED SLAB UNITS (TO BE TENSIONED DURING STAGE II CONSTRUCTION).

NORTH CAROLINA PROFESSIONAL SEAL 6078 ENGINEER HARDY L. WILLIS
1/14/14

PROJECT NO. 17BP.14.R.132
HENDERSON COUNTY
STATION: 12+28.00 -L-

SHEET 2 OF 5

V&M
Vaughn & Melton
Consulting Engineers
Asheville, North Carolina 828-253-2796
Charlotte, North Carolina 704-357-0488
Tri-Cities, Tennessee 423-467-8401
Knoxville, Tennessee 865-546-5800
Middlesboro, Kentucky 606-248-6600
Spartanburg, South Carolina 864-574-4775
Copyright © 2006 Vaughn & Melton, Inc.
All Rights Reserved

STATE OF NORTH CAROLINA
DEPARTMENT OF TRANSPORTATION
RALEIGH

STANDARD
3'-0'' X 2'-0''
PRESTRESSED CONCRETE
CORED SLAB UNIT

DWN. BY: CJR DATE: 11/2013
CHKD. BY: HLW DATE: 11/2013
ENG. OF REC.: RTS DATE: 11/2013

REVISIONS						SHEET NO.
NO.	BY:	DATE:	NO.	BY:	DATE:	S-7
1			3			TOTAL SHEETS
2			4			22

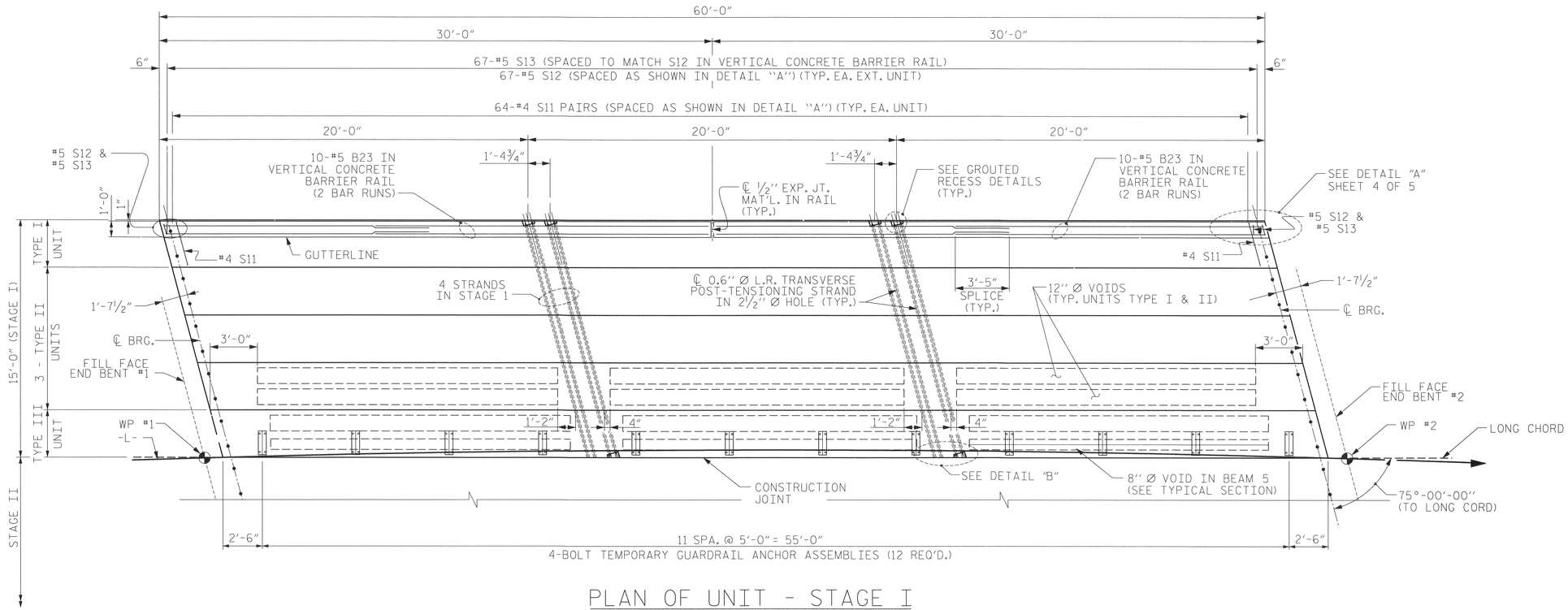

PLAN OF UNIT - STAGE I

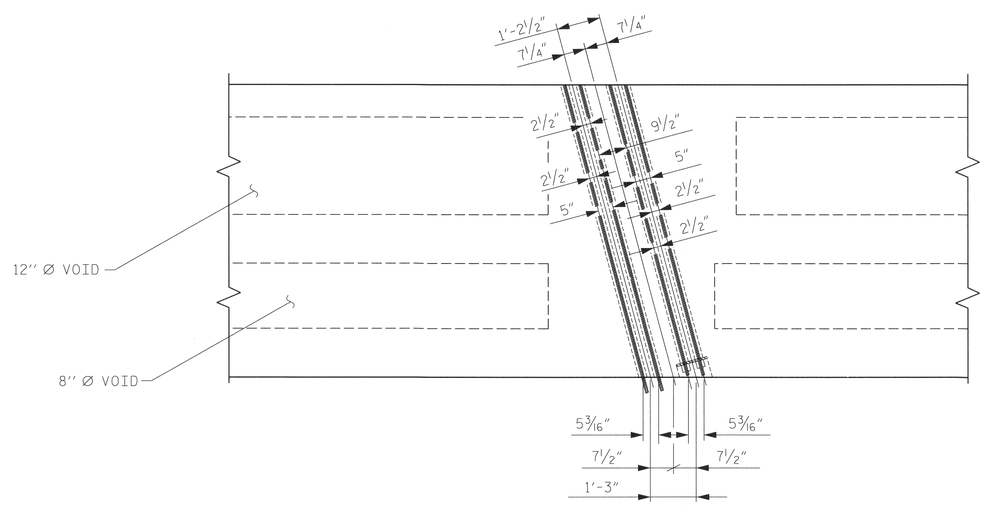

DETAIL "B"

#4 S11 BARS MAY BE SHIFTED AS NECESSARY TO MAINTAIN 1" CLEAR TO GROUTED RECESS AND 2½" Ø TRANSVERSE POST-TENSIONING STRAND HOLES

NORTH CAROLINA PROFESSIONAL SEAL 20771 ENGINEER HARDY L. WILLIS 11/14/14

PROJECT NO. 17BP.14.R.132

HENDERSON COUNTY

STATION: 12+28.00 -L-

SHEET 3 OF 5

V&M Vaughn & Melton Consulting Engineers

Asheville, North Carolina 828-253-2796

Charlotte, North Carolina 704-357-0488

Tri-Cities, Tennessee 423-467-8401

Knoxville, Tennessee 865-546-5800

Middlesboro, Kentucky 606-248-6400

Spartanburg, South Carolina 864-574-4775

Copyright © 2006 Vaughn & Melton, Inc. All Rights Reserved

STATE OF NORTH CAROLINA
DEPARTMENT OF TRANSPORTATION
RALEIGH

PLAN OF 60' UNIT 27'-10" CLEAR ROADWAY 75° SKEW

STAGE I

DWN. BY: CJR DATE: 11/2013
CHKD. BY: HLW DATE: 11/2013
ENG. OF REC.: RTS DATE: 11/2013

REVISIONS						
NO.	BY:	DATE:	NO.	BY:	DATE:	
1			3			
2			4			

SHEET NO. S-8

TOTAL SHEETS 22

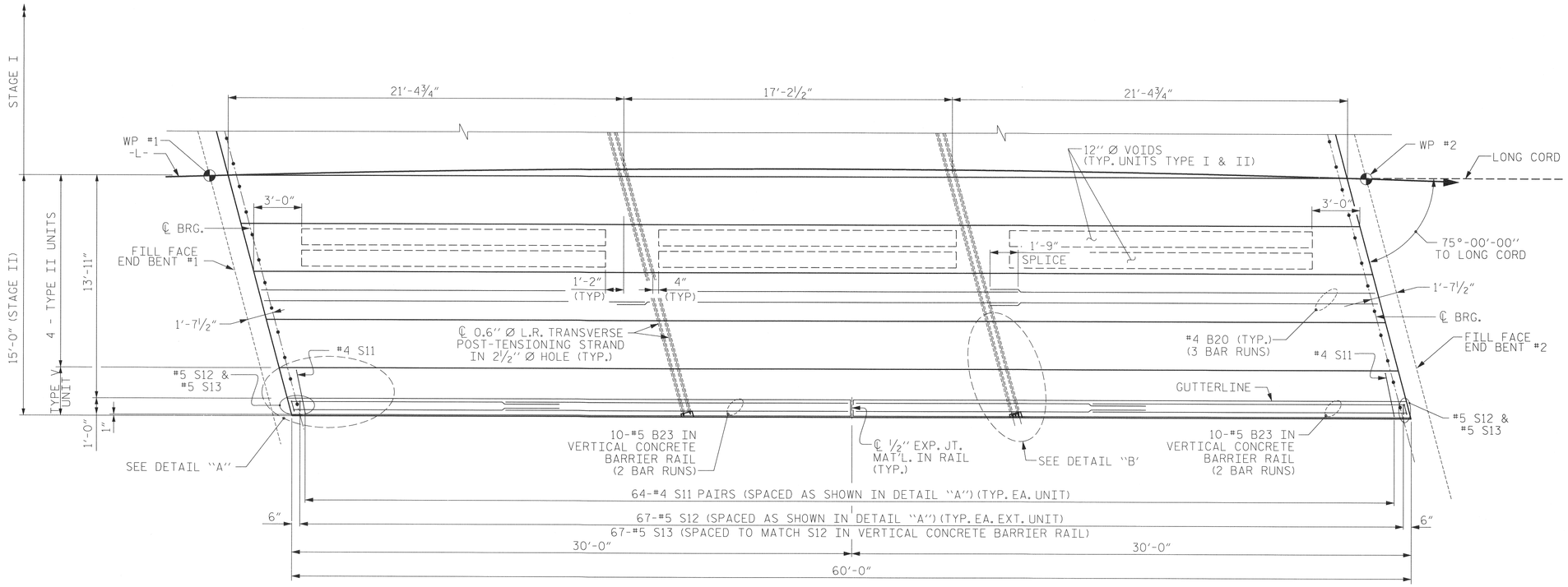

PLAN OF UNIT - STAGE II

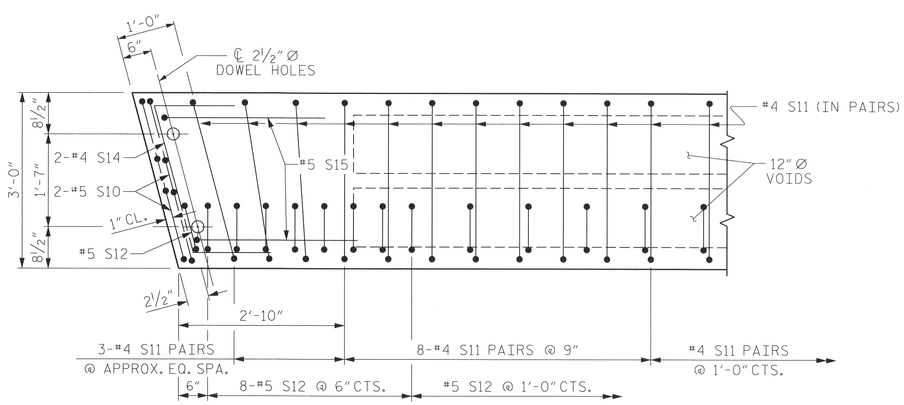

DETAIL "A"

NOTE: EXTERIOR UNIT SHOWN - INTERIOR UNIT SIMILAR EXCEPT OMIT #5 S12 BARS.

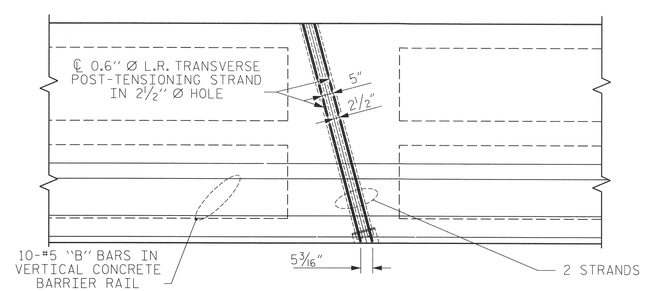

DETAIL "B"

#4 S11 BARS MAY BE SHIFTED AS NECESSARY TO MAINTAIN 1" CLEAR TO GROUTED RECESS AND 2½" Ø TRANSVERSE POST-TENSIONING STRAND HOLES

NORTH CAROLINA PROFESSIONAL SEAL 20777 ENGINEER HARDY L. WILLIS 11/14/14

PROJECT NO. 17BP.14.R.132

HENDERSON COUNTY

STATION: 12+28.00 -L-

SHEET 4 OF 5

V&M
Vaughn & Melton
Consulting Engineers
Asheville, North Carolina 828-253-2796
Charlotte, North Carolina 704-357-0488
Tri-Cities, Tennessee 423-467-8400
Knoxville, Tennessee 865-546-5800
Middlesboro, Kentucky 606-248-6600
Spartanburg, South Carolina 864-574-4775

Copyright © 2006 Vaughn & Melton, Inc. All Rights Reserved

STATE OF NORTH CAROLINA
DEPARTMENT OF TRANSPORTATION
RALEIGH

PLAN OF 60' UNIT 27'-10" CLEAR ROADWAY 75° SKEW

STAGE II

DWN. BY: CJR	DATE: 11/2013
CHKD. BY: HLW	DATE: 11/2013
ENG. OF REC.: RTS	DATE: 11/2013

REVISIONS						
NO.	BY:	DATE:	NO.	BY:	DATE:	
1			3			
2			4			

SHEET NO. S-9

TOTAL SHEETS 22

NOTES

ALL PRESTRESSING STRANDS SHALL BE 7-WIRE LOW RELAXATION GRADE 270 STRANDS AND SHALL CONFORM TO AASHTO M203 EXCEPT FOR SAMPLING REQUIREMENTS WHICH SHALL BE IN ACCORDANCE WITH THE STANDARD SPECIFICATIONS.

ALL REINFORCING STEEL CAST WITH THE CORED SLAB SECTIONS SHALL BE GRADE 60 AND SHALL BE INCLUDED IN THE UNIT PRICE BID FOR PRESTRESSED CONCRETE CORED SLABS.

RECESSES FOR TRANSVERSE STRANDS SHALL BE GROUTED AFTER THE TENSIONING OF THE STRANDS.

THE 2½"Ø DOWEL HOLES AT FIXED ENDS OF SLAB SECTIONS SHALL BE FILLED WITH NON-SHRINK GROUT.

THE BACKER RODS SHALL CONFORM TO THE REQUIREMENTS OF TYPE M BOND BREAKER. SEE SECTION 1028 OF THE STANDARD SPECIFICATIONS.

WHEN CORED SLABS ARE CAST, AN INTERNAL HOLD-DOWN SYSTEM SHALL BE EMPLOYED TO PREVENT VOIDS FROM RISING OR MOVING SIDEWAYS. AT LEAST SIX WEEKS PRIOR TO CASTING CORED SLABS, THE CONTRACTOR SHALL SUBMIT TO THE ENGINEER FOR REVIEW AND COMMENT, DETAILED DRAWINGS OF THE PROPOSED HOLD-DOWN SYSTEM. IN ADDITION TO STRUCTURAL DETAILS, LOCATION AND SPACING OF THE HOLD-DOWNS SHALL BE INDICATED.

THE TRANSFER OF LOAD FROM THE ANCHORAGES TO THE CORED SLAB UNIT SHALL BE DONE WHEN THE CONCRETE HAS REACHED A COMPRESSIVE STRENGTH OF NOT LESS THAN THE REQUIRED STRENGTH SHOWN IN THE "CONCRETE RELEASE STRENGTH" TABLE.

ALL REINFORCING STEEL IN VERTICAL CONCRETE BARRIER RAILS SHALL BE EPOXY COATED.

PRESTRESSING STRANDS SHALL BE CUT FLUSH WITH THE CORED SLAB UNIT ENDS.

APPLY EPOXY PROTECTIVE COATING TO CORED SLAB UNIT ENDS.

GROOVED CONTRACTION JOINTS, ½" IN DEPTH, SHALL BE TOOLED IN ALL EXPOSED FACES OF THE BARRIER RAIL AND IN ACCORDANCE WITH ARTICLE 825-10(B) OF THE STANDARD SPECIFICATIONS. A CONTRACTION JOINT SHALL BE LOCATED AT EACH THIRD POINT BETWEEN BARRIER RAIL EXPANSION JOINTS. ONLY ONE CONTRACTION JOINT IS REQUIRED AT MIDPOINT OF BARRIER RAIL SEGMENTS LESS THAN 20 FEET IN LENGTH AND NO CONTRACTION JOINTS ARE REQUIRED FOR THOSE SEGMENTS LESS THAN 10 FEET IN LENGTH.

TRANSVERSE POST TENSIONING OF THE CORED SLAB UNITS SHALL BE DONE IN ACCORDANCE WITH THE STANDARD SPECIFICATIONS.

MAINTAIN A SYMMETRIC TENSION FORCE BETWEEN EACH PAIR OF TRANSVERSE POST TENSIONING STRANDS IN THE DIAPHRAGM.

THE #4 S11 STIRRUPS MAY BE SHIFTED AS NECESSARY TO MAINTAIN 1" CLEAR TO THE GROUTED RECESS.

FOR GROUT FOR STRUCTURES, SEE SPECIAL PROVISIONS.

BAR TYPES

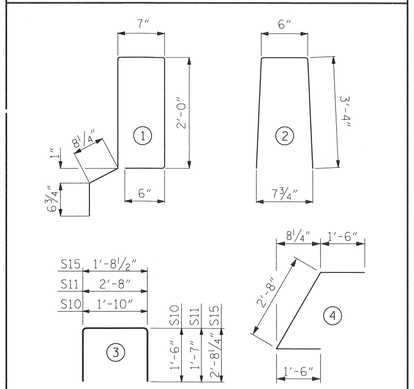

ALL BAR DIMENSIONS ARE OUT TO OUT

BILL OF MATERIAL FOR ONE 60' CORED SLAB UNIT

				EXTERIOR UNIT		INTERIOR UNIT	
BAR	NUMBER	SIZE	TYPE	LENGTH	WEIGHT	LENGTH	WEIGHT
B20	6	#4	STR	21'-2"	85	21'-2"	85
S10	8	#5	3	4'-10"	40	4'-10"	40
S11	128	#4	3	5'-10"	499	5'-10"	499
✳S12	69	#5	1	6'-4"	456		
S14	4	#4	4	5'-8"	15	5'-8"	15
S15	4	#5	3	7'-1"	30	7'-1"	30
REINFORCING STEEL			LBS.		669		669
✳EPOXY COATED REINFORCING STEEL			LBS.		456		
7500 P.S.I. CONCRETE			CU. YDS.		10.3		10.3
0.6"Ø L.R. STRANDS			No.		24		24

GUTTERLINE ASPHALT THICKNESS & RAIL HEIGHT

	ASPHALT OVERLAY THICKNESS @ MID-SPAN	RAIL HEIGHT @ MID-SPAN
60' UNITS	2⅜"	3'-8⅝"

BILL OF MATERIAL FOR VERTICAL CONCRETE BARRIER RAIL

BAR	BARS PER PAIR OF EXTERIOR UNITS 60' UNIT	TOTAL NO.	SIZE	TYPE	LENGTH	WEIGHT
✳B23	80	80	#5	STR	16'-11"	1412
✳S13	138	138	#5	2	7'-2"	1032
✳EPOXY COATED REINFORCING STEEL				LBS.		2444
CLASS AA CONCRETE				CU.YDS.		16.2
TOTAL VERTICAL CONCRETE BARRIER RAIL				LN. FT.		120.26

CORED SLABS REQUIRED

	NUMBER	LENGTH	TOTAL LENGTH
60' UNIT			
EXTERIOR C.S.	2	60'-0"	120'-0"
INTERIOR C.S.	8	60'-0"	480'-0"
TOTAL	10		600'-0"

GRADE 270 STRANDS

	0.6"Ø L.R.
AREA (SQUARE INCHES)	0.217
ULTIMATE STRENGTH (LBS. PER STRAND)	58,600
APPLIED PRESTRESS (LBS. PER STRAND)	43,950

CONCRETE RELEASE STRENGTH

UNIT	PSI
60'	5000

DEAD LOAD DEFLECTION AND CAMBER

	3'-0" x 2'-0"
60' CORED SLAB UNIT	0.6"Ø L.R. STRAND
CAMBER (SLAB ALONE IN PLACE)	3⅜" ↑
DEFLECTION DUE TO SUPERIMPOSED DEAD LOAD✳✳	½" ↓
FINAL CAMBER	2⅞" ↑

✳✳ INCLUDES FUTURE WEARING SURFACE

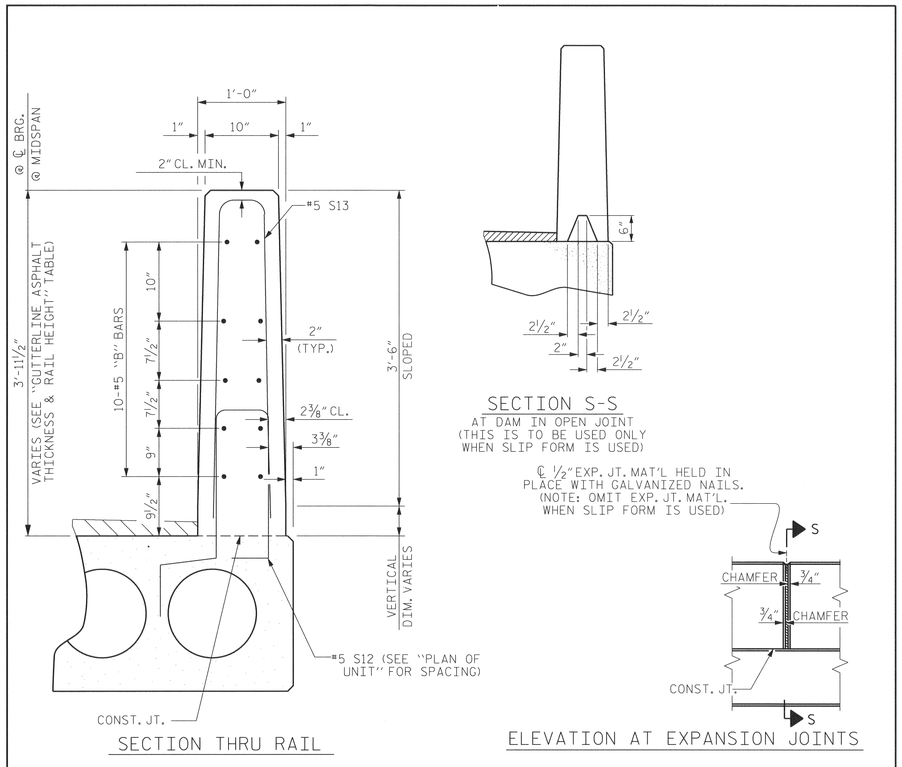

VERTICAL CONCRETE BARRIER RAIL DETAILS

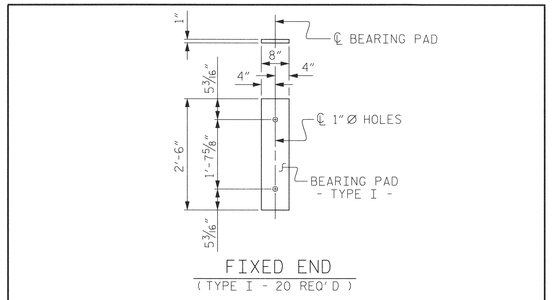

ELASTOMERIC BEARING DETAILS

ELASTOMER IN ALL BEARINGS SHALL BE 60 DUROMETER HARDNESS.

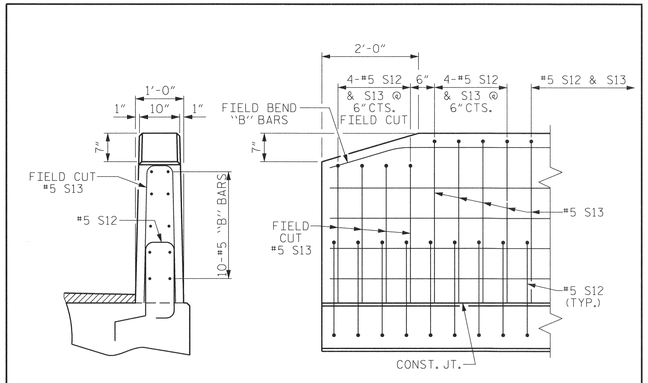

END OF RAIL DETAILS

PROJECT NO. 17BP.14.R.132

HENDERSON COUNTY

STATION: 12+28.00 -L-

SHEET 5 OF 5

STATE OF NORTH CAROLINA
DEPARTMENT OF TRANSPORTATION
RALEIGH

STANDARD
3'-0" X 2'-0"
PRESTRESSED CONCRETE
CORED SLAB UNIT

NORTH CAROLINA PROFESSIONAL SEAL 027177 ENGINEER HARDY L. WILLIS 1/14/14

ASSEMBLED BY :	RTS	DATE : 11/2013
CHECKED BY :	HLW	DATE : 11/2013
DRAWN BY : MAA	6/10	REV. 12/11 MAA/AAC
CHECKED BY : MKT	7/10	

REVISIONS						SHEET NO.
NO.	BY:	DATE:	NO.	BY:	DATE:	S-10
1			3			TOTAL SHEETS
2			4			22

STD. NO. 24PCS3_30_75&105S

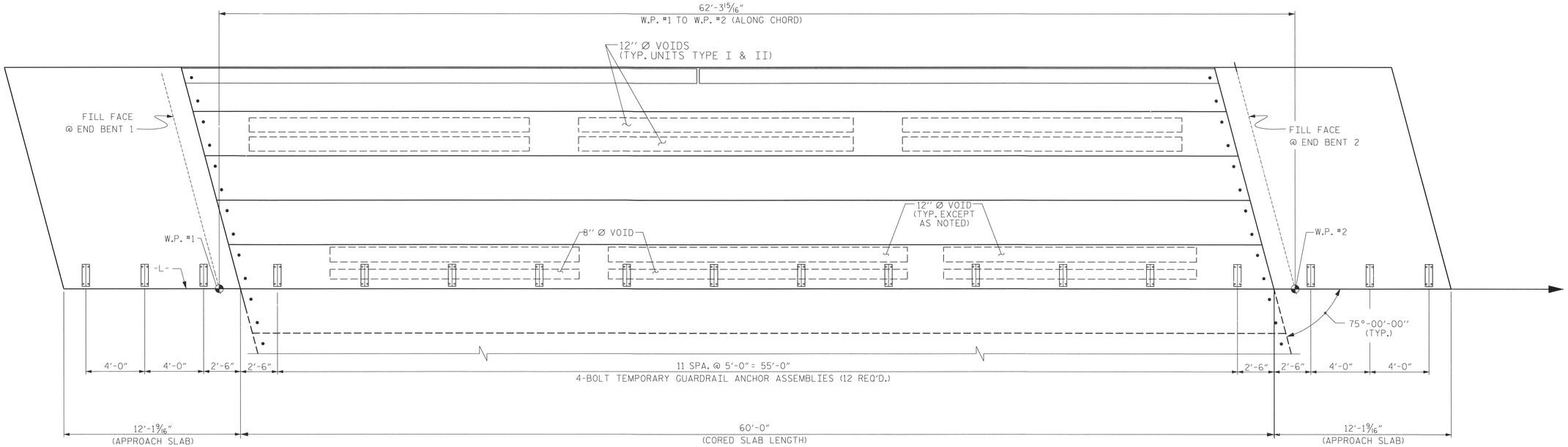

RAIL POST SPACING FOR TEMPORARY GUARDRAIL - STAGE I

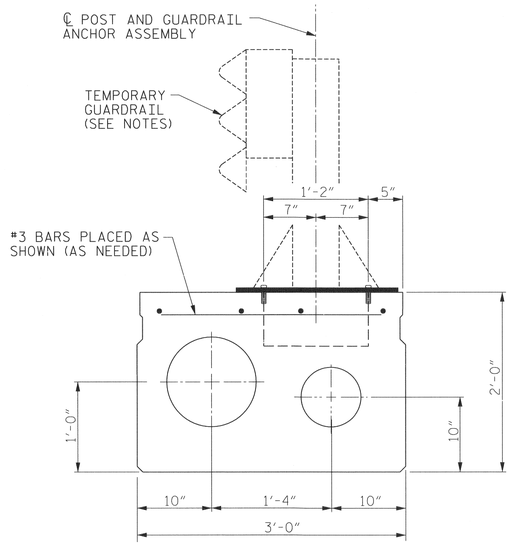

SECTION OF ANCHOR ASSEMBLY LOCATION

(TYPE III UNIT - STAGE I)
THE #3 BARS ARE INCIDENTAL AND THEIR COST SHALL BE INCLUDED IN THE PRICE BID FOR THE PRESTRESSED CONCRETE CORED SLABS.

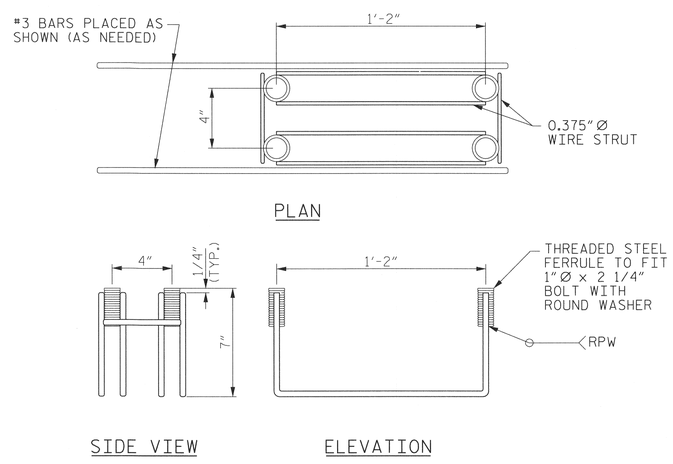

MINIMUM LENGTH OF THREADS IN INSERT (FERRULE): 2 1/2"

TEMPORARY GUARDRAIL ANCHOR ASSEMBLY

(12 ASSEMBLIES REQUIRED IN THE TYPE III CORED SLAB UNITS)
(6 ASSEMBLIES REQUIRED IN THE APPROACH SLABS)

NOTES

THE TEMPORARY GUARDRAIL ANCHOR ASSEMBLY SHALL CONSIST OF THE FOLLOWING COMPONENTS:

A. FERRULES SHALL BE MADE FROM STEEL MEETING THE REQUIREMENTS OF AASHTO M169, GRADE 12L14 AND SHALL HAVE A MINIMUM LENGTH OF THREADS OF 2½".

B. 4 - 1" Ø X 2¼" BOLTS WITH WASHERS. BOLTS SHALL CONFORM TO THE REQUIREMENTS OF ASTM A307. BOLTS AND WASHERS SHALL BE GALVANIZED. (AT THE CONTRACTOR'S OPTION STAINLESS STEEL BOLTS AND WASHERS MAY BE USED AS AN ALTERNATE FOR THE 1" Ø X 2¼" GALVANIZED BOLTS AND WASHERS. THEY SHALL CONFORM TO OR EXCEED THE MECHANICAL REQUIREMENTS OF ASTM A307. THE USE OF THIS ALTERNATE SHALL BE APPROVED BY THE ENGINEER.)

C. WIRE STRUTS SHOWN IN THE TEMPORARY GUARDRAIL ANCHOR ASSEMBLY DETAIL ARE THE MINIMUM ALLOWABLE SIZE AND SHALL HAVE A MINIMUM TENSILE STRENGTH OF 100,000 PSI.

TEMPORARY GUARDRAIL ANCHOR ASSEMBLY WITH BOLTS SHALL BE ASSEMBLED IN THE SHOP. BOLT THREADS MAY BE RECUT AS NECESSARY TO ENSURE FIT.

THE COST OF THE TEMPORARY GUARDRAIL ANCHOR ASSEMBLY COMPLETE IN PLACE SHALL BE INCLUDED, AS APPLICABLE, IN THE UNIT CONTRACT PRICE BID FOR 3'-0" X 2'-0" PRESTRESSED CONCRETE CORED SLAB OR LUMP SUM PRICE BID FOR APPROACH SLABS.

FERRULES SHALL BE PLUGGED DURING CASTING OF THE CORED SLAB UNITS OR POURING OF APPROACH SLAB AS RECOMMENDED BY THE MANUFACTURER.

AT THE CONTRACTOR'S OPTION, FERRULES WITH OPEN OR CLOSED ENDS MAY BE USED.

PAYMENT FOR TEMPORARY GUARDRAIL, POST, AND POST BASE PLATES IS INCLUDED IN ROADWAY PAY ITEMS.

PROJECT NO. 17BP.14.R.132
HENDERSON COUNTY
STATION: 12+28.00 -L-

NORTH CAROLINA PROFESSIONAL SEAL 027777 ENGINEER HARDY L. WILLIS 11/14/14

V&M
Vaughn & Melton
Consulting Engineers
Asheville, North Carolina 828-253-2796
Charlotte, North Carolina 704-357-0488
Tri-Cities, Tennessee 423-467-8401
Knoxville, Tennessee 865-546-5800
Middlesboro, Kentucky 606-248-6600
Spartanburg, South Carolina 864-574-4775

Copyright © 2006 Vaughn & Melton, Inc. All Rights Reserved

STATE OF NORTH CAROLINA
DEPARTMENT OF TRANSPORTATION
RALEIGH

ANCHORAGE DETAILS FOR TEMPORARY GAURDRAIL ANCHOR ASSEMBLY FOR TYPE III CORED SLAB UNIT - STAGE I

DWN. BY: CJR DATE: 11/2013
CHKD. BY: HLW DATE: 11/2013
ENG. OF REC.: RTS DATE: 11/2013

REVISIONS						SHEET NO.
NO.	BY:	DATE:	NO.	BY:	DATE:	S-11
1			3			TOTAL SHEETS
2			4			22

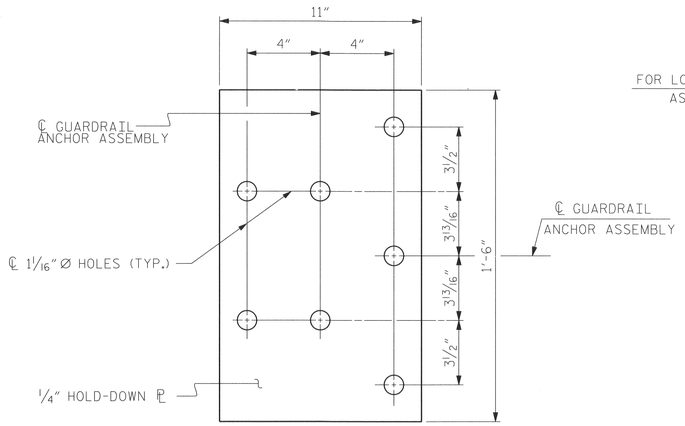

PLAN

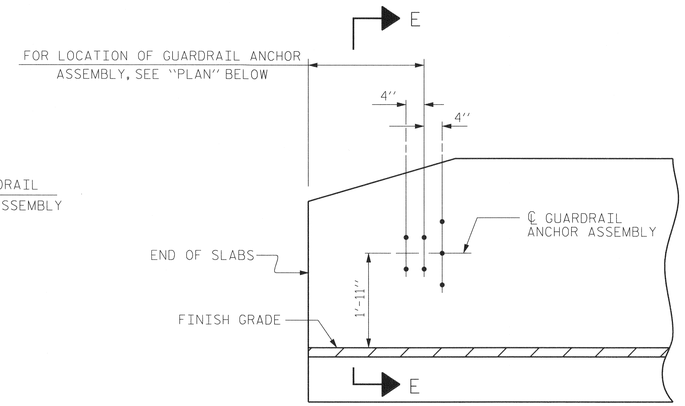

ELEVATION

NOTES (FOR VERTICAL CONCRETE BARRIER RAIL)

THE GUARDRAIL ANCHOR ASSEMBLY SHALL CONSIST OF A 1/4" HOLD DOWN PLATE AND 7 - 7/8" Ø BOLTS WITH NUTS AND WASHERS.

THE HOLD-DOWN PLATE SHALL CONFORM TO AASHTO M270 GRADE 36. AFTER FABRICATION, THE HOLD-DOWN PLATE SHALL BE HOT-DIP GALVANIZED IN ACCORDANCE WITH AASHTO M111.

BOLTS SHALL CONFORM TO THE REQUIREMENTS OF ASTM A307 AND NUTS SHALL CONFORM TO THE REQUIREMENTS OF AASHTO M291. BOLTS, NUTS AND WASHERS SHALL BE GALVANIZED. (AT THE CONTRACTOR'S OPTION, STAINLESS STEEL BOLTS, NUTS AND WASHERS MAY BE USED AS AN ALTERNATE FOR THE 7/8" Ø GALVANIZED BOLTS, NUTS AND WASHERS. THEY SHALL CONFORM TO OR EXCEED THE MECHANICAL REQUIREMENTS OF ASTM A307. THE USE OF THIS ALTERNATE SHALL BE APPROVED BY THE ENGINEER.)

THE GUARDRAIL ANCHOR ASSEMBLY IS REQUIRED AT ALL POINTS WHERE APPROACH GUARDRAIL IS TO BE ATTACHED TO THE END OF BARRIER RAIL. FOR POINTS OF ATTACHMENT, SEE SKETCH.

AFTER INSTALLATION, THE EXPOSED THREAD OF THE BOLT SHALL BE BURRED WITH A SHARP POINTED TOOL.

THE COST OF THE GUARDRAIL ANCHOR ASSEMBLY SHALL BE INCLUDED IN THE UNIT CONTRACT PRICE BID FOR VERTICAL CONCRETE BARRIER RAIL.

THE VERTICAL REINFORCING BARS MAY BE SHIFTED SLIGHTLY IN THE VERTICAL CONCRETE BARRIER RAIL TO CLEAR ASSEMBLY BOLTS.

THE 1 1/4" Ø HOLES SHALL BE FORMED OR DRILLED WITH A CORE BIT. IMPACT TOOLS WILL NOT BE PERMITTED. ANY CONCRETE DAMAGED BY THIS WORK SHALL BE REPAIRED TO THE SATISFACTION OF THE ENGINEER.

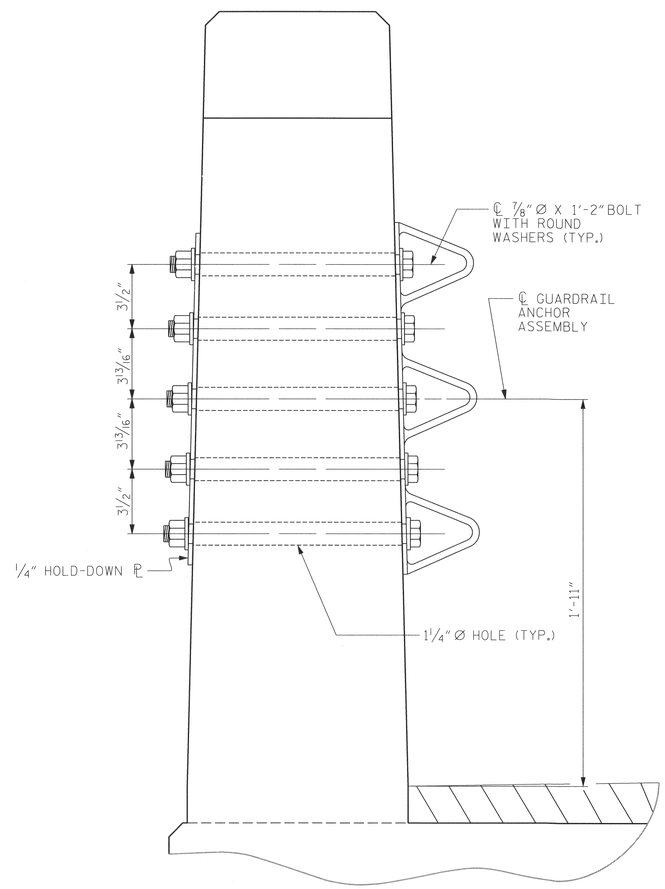

SECTION E-E

GUARDRAIL ANCHOR ASSEMBLY DETAILS

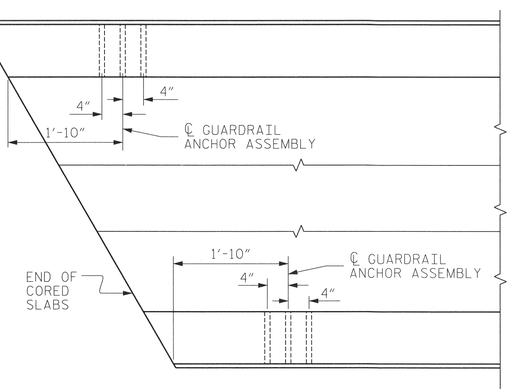

PLAN

LOCATION OF ANCHORS FOR GUARDRAIL

END BENT #1 SHOWN, END BENT #2 SIMILAR.

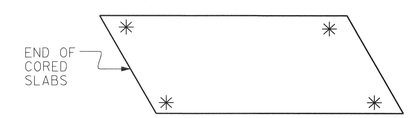

SKETCH SHOWING POINTS OF ATTACHMENT

✳ DENOTES GUARDRAIL ANCHOR ASSEMBLY

PROJECT NO. 17BP.14.R.132

HENDERSON COUNTY

STATION: 12+28.00 -L-

NORTH CAROLINA PROFESSIONAL SEAL 017777 ENGINEER RICHARDY L. WILLIS 7/14/14

STATE OF NORTH CAROLINA
DEPARTMENT OF TRANSPORTATION
RALEIGH

STANDARD

GUARDRAIL ANCHORAGE FOR VERTICAL CONCRETE BARRIER RAIL

REVISIONS						SHEET NO.
NO.	BY:	DATE:	NO.	BY:	DATE:	S-12
1			3			TOTAL SHEETS
2			4			22

ASSEMBLED BY :	RTS	DATE :	11/2013
CHECKED BY :	HLW	DATE :	11/2013
DRAWN BY : CVC	6/10		
CHECKED BY : DNS	6/10		

$$$$$$SYSTIME$$$$$
$$$$$$$$$$$$$$$$$$$$$$$$DGN$$$$$$$$$$$$$$$$$$$$$$$$
$$$$USERNAME$$$$

(SHT. 3) STD. NO. GRA3

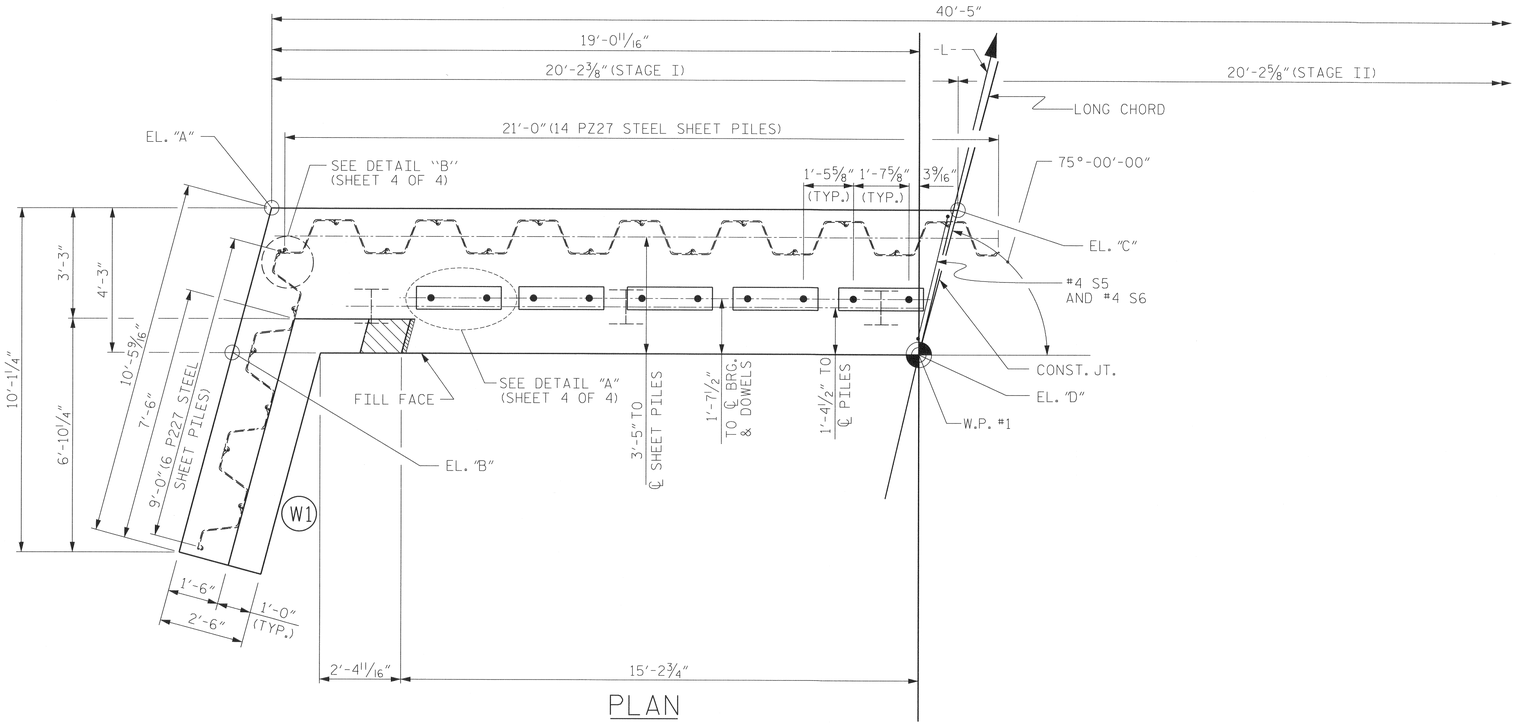

PLAN

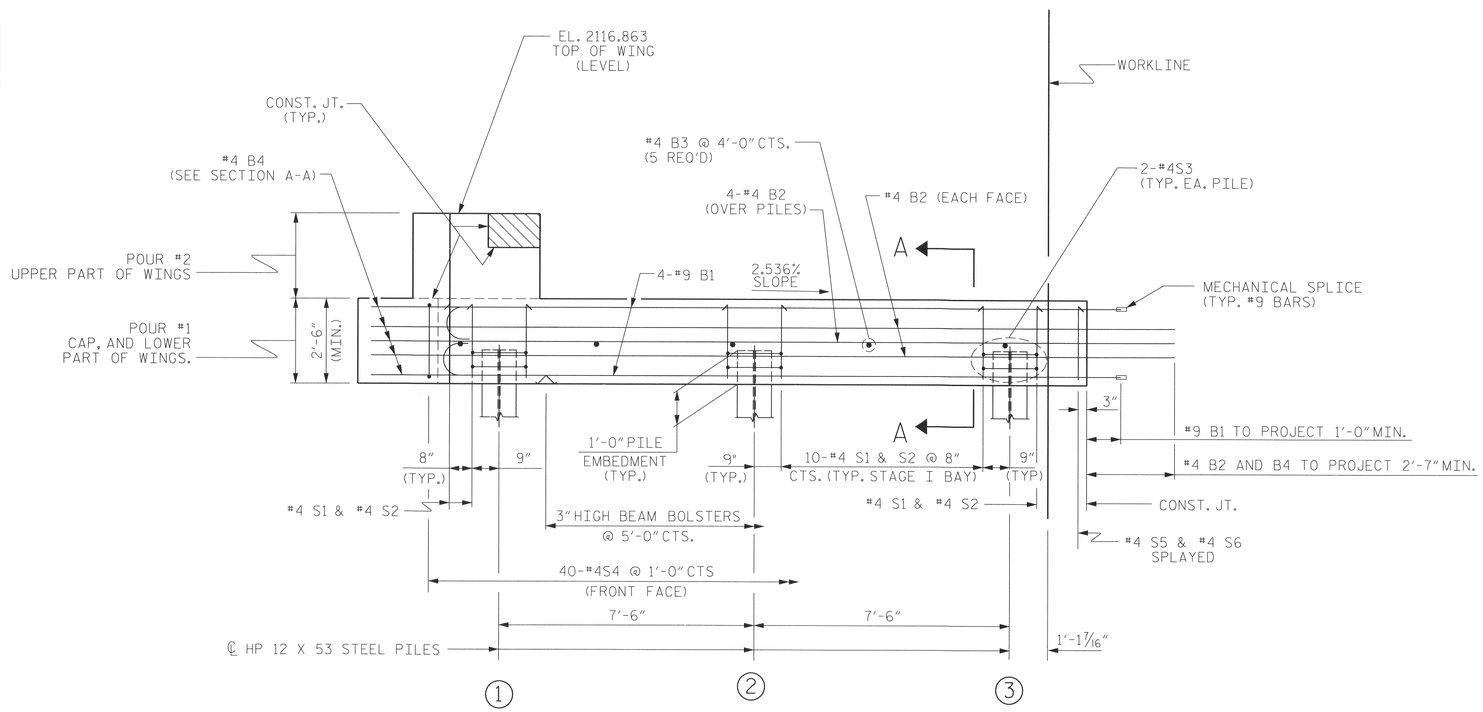

ELEVATION

WINGS NOT SHOWN FOR CLARITY.
FOR SECTION A-A, SEE SHEET 4 OF 4.
SHEET PILES NOT SHOWN FOR CLARITY

NOTES

STIRRUPS IN CAP MAY BE SHIFTED AS NECESSARY TO CLEAR DOWELS.

THE CONCRETE IN THE SHADED AREA OF THE WING SHALL BE POURED AFTER THE VERTICAL CONCRETE BARRIER RAIL IS CAST IF SLIP FORMING IS USED.

FOR PILE SPLICE DETAILS, SEE SHEET 4 OF 4.

FOR WING DETAILS, SEE SHEET 3 OF 4.

TOP OF PILE ELEVATIONS	
1	2112.812
2	2112.622
3	2112.432

	TOP OF CAP ELEVATIONS	BOTTOM OF CAP ELEVATIONS
A	2114.388	2111.888
B	2114.363	2111.863
C	2113.876	2111.376
D	2113.851	2111.351

NORTH CAROLINA PROFESSIONAL SEAL 24177 ENGINEER HARDY L. WILLIS 1/14/14

PROJECT NO. 17BP.14.R.132

HENDERSON COUNTY

STATION: 12+28.00 -L-

SHEET 1 OF 4

Vaughn & Melton Consulting Engineers
Asheville, North Carolina 828-253-2796
Charlotte, North Carolina 704-357-0488
Tri-Cities, Tennessee 423-467-8401
Knoxville, Tennessee 865-546-5800
Middlesboro, Kentucky 606-248-6600
Spartanburg, South Carolina 864-574-4775

Copyright © 2006 Vaughn & Melton, Inc. All Rights Reserved

STATE OF NORTH CAROLINA
DEPARTMENT OF TRANSPORTATION
RALEIGH

SUBSTRUCTURE
END BENT No. 1
STAGE I

DWN. BY: CJR DATE: 11/2013
CHKD. BY: HLW DATE: 11/2013
ENG. OF REC.: RTS DATE: 11/2013

REVISIONS						
NO.	BY:	DATE:	NO.	BY:	DATE:	
1			3			
2			4			

SHEET NO. S-13
TOTAL SHEETS 22

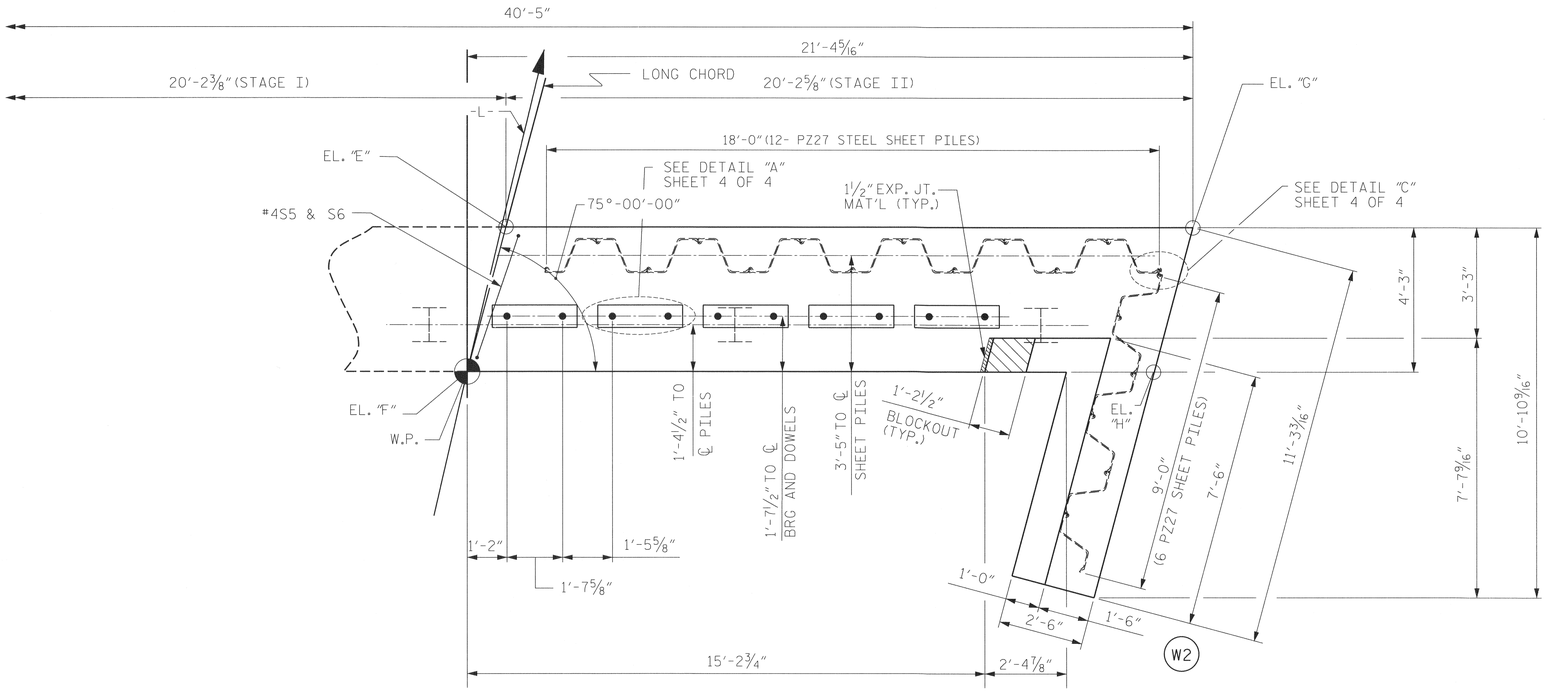

PLAN

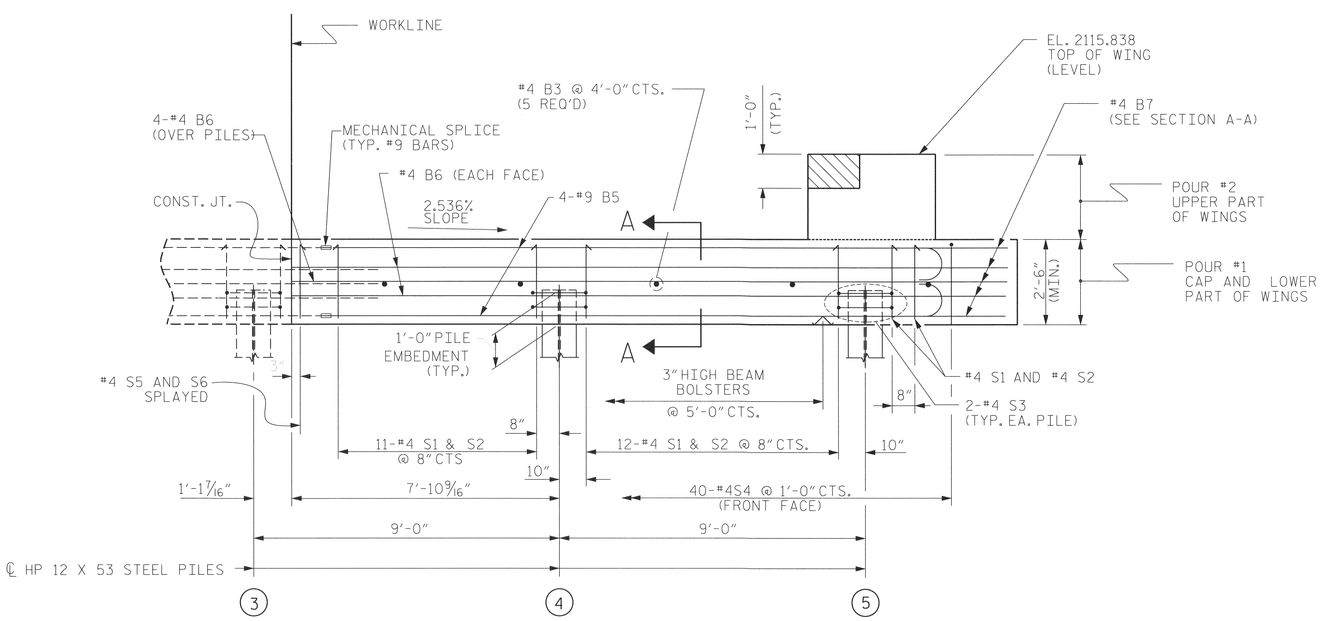

ELEVATION

WINGS NOT SHOWN FOR CLARITY.
FOR SECTION A-A, SEE SHEET 4 OF 4.
SHEET PILES NOT SHOWN FOR CLARITY

NOTES

STIRRUPS IN CAP MAY BE SHIFTED AS NECESSARY TO CLEAR DOWELS.

THE CONCRETE IN THE SHADED AREA OF THE WING SHALL BE POURED AFTER THE VERTICAL CONCRETE BARRIER RAIL IS CAST IF SLIP FORMING IS USED.

FOR PILE SPLICE DETAILS, SEE SHEET 4 OF 4.

FOR WING DETAILS, SEE SHEET 3 OF 4.

TOP OF PILE ELEVATIONS	
4	2112.204
5	2111.976

	TOP OF CAP ELEVATIONS	BOTTOM OF CAP ELEVATIONS
E	2113.876	2111.376
F	21113.851	2111.351
G	2113.363	2110.863
H	2113.338	2110.838

NORTH CAROLINA PROFESSIONAL SEAL 022 ENGINEER HARDY L. WILLIS 1/14/14

PROJECT NO. 17BP.14.R.132

HENDERSON COUNTY

STATION: 12+28.00 -L-

SHEET 2 OF 4

V&M Vaughn & Melton Consulting Engineers
Asheville, North Carolina 828-253-2796
Charlotte, North Carolina 704-357-0488
Tri-Cities, Tennessee 423-467-8401
Knoxville, Tennessee 865-546-5800
Middlesboro, Kentucky 606-248-6600
Spartanburg, South Carolina 864-574-4775
Copyright © 2006 Vaughn & Melton, Inc. All Rights Reserved

STATE OF NORTH CAROLINA
DEPARTMENT OF TRANSPORTATION
RALEIGH

SUBSTRUCTURE
END BENT No. 1
STAGE II

DWN. BY: CJR DATE: 11/2013
CHKD. BY: HLW DATE: 11/2013
ENG. OF REC.: RTS DATE: 11/2013

REVISIONS						
NO.	BY:	DATE:	NO.	BY:	DATE:	
1			3			
2			4			

SHEET NO. S-14
TOTAL SHEETS 22

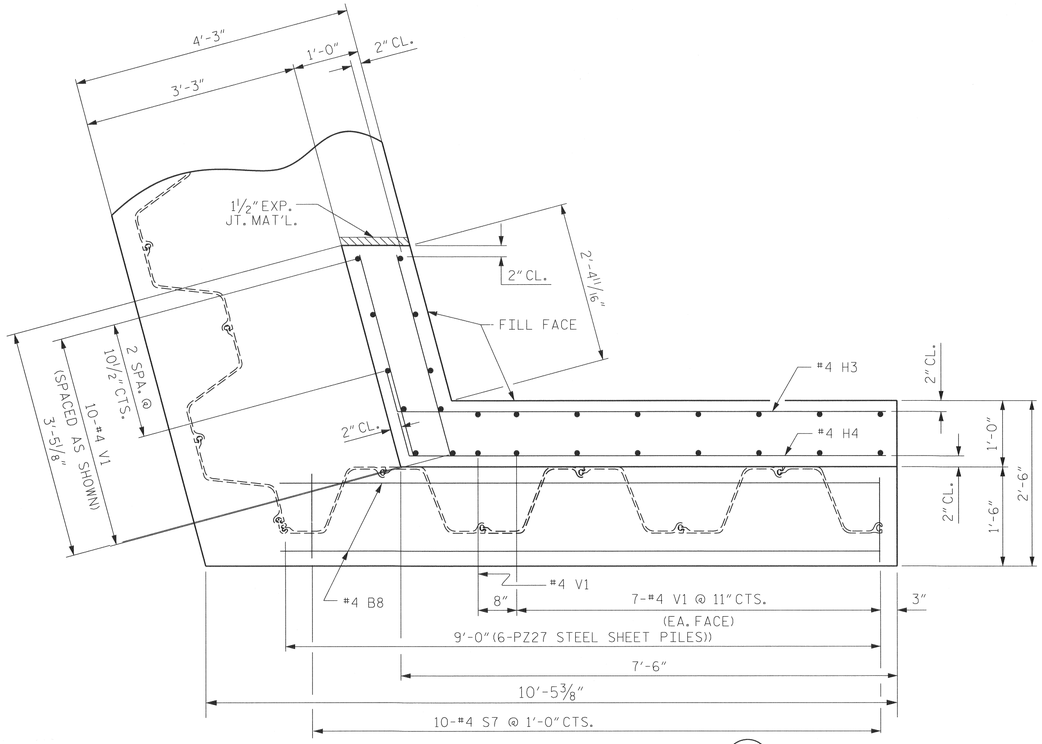

PLAN OF WING (W1)
(STAGE I)

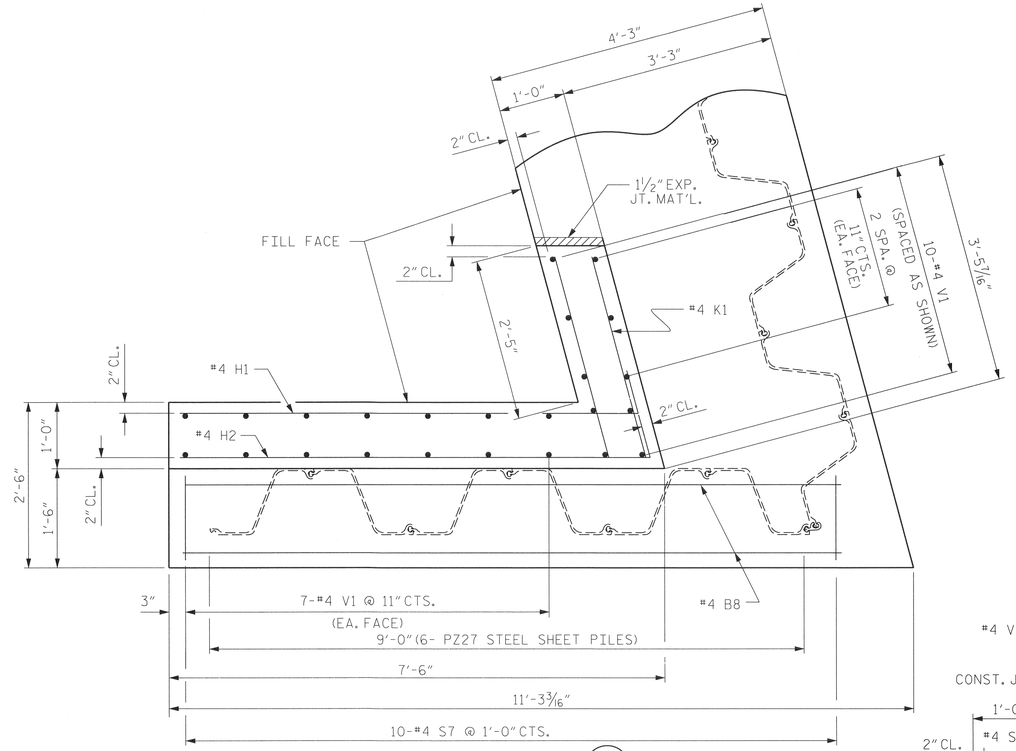

PLAN OF WING (W2)
(STAGE II)

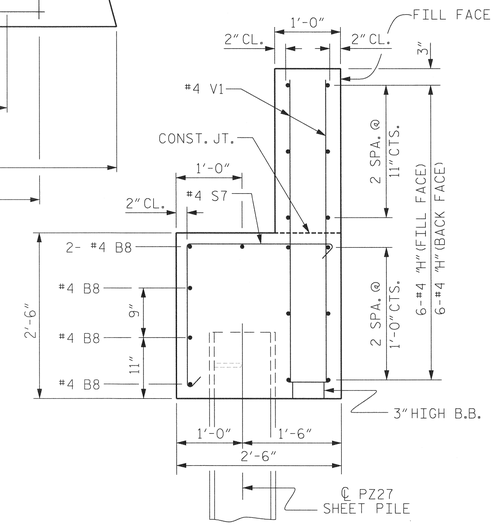

SECTION X-X

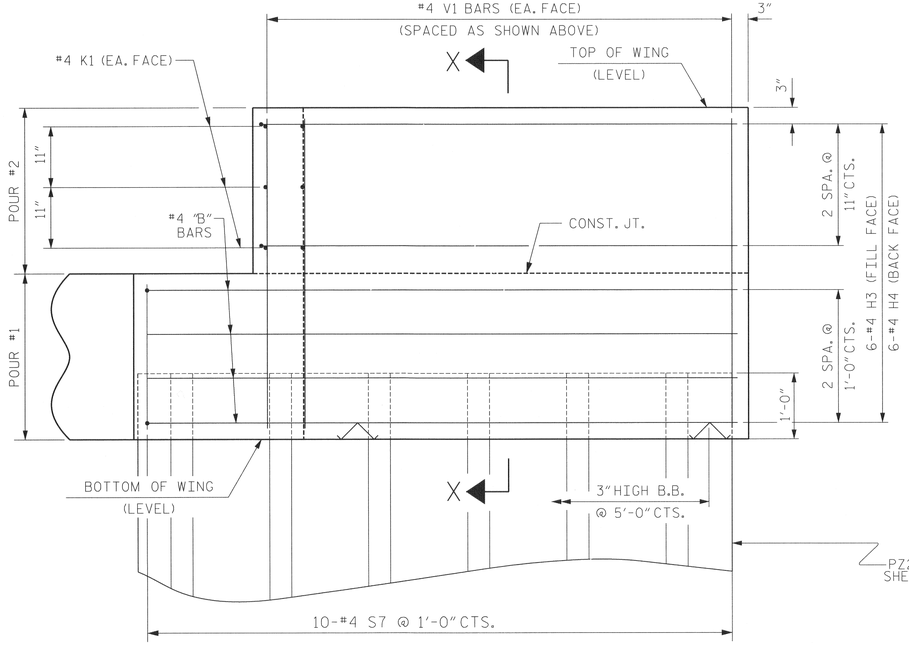

ELEVATION OF WING (W1)
(STAGE I)

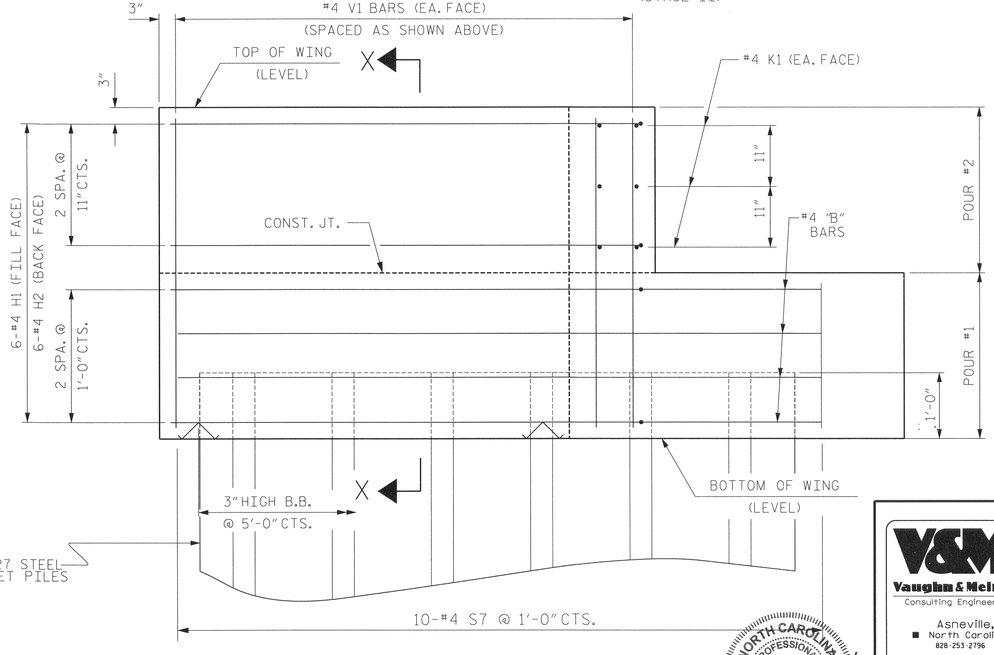

ELEVATION OF WING (W2)
(STAGE II)

WING DETAILS

PROJECT NO. 17BP.14.R.132

HENDERSON COUNTY

STATION: 12+28.00 -L-

SHEET 3 OF 4

V&M
Vaughn & Melton
Consulting Engineers
Asheville, North Carolina 828-253-2796
Charlotte, North Carolina 704-357-0488
Tri-Cities, Tennessee 423-467-8401
Knoxville, Tennessee 865-546-5800
Middlesboro, Kentucky 606-248-6600
Spartanburg, South Carolina 864-574-4775

Copyright © 2006 Vaughn & Melton, Inc. All Rights Reserved

NORTH CAROLINA PROFESSIONAL SEAL 007772 ENGINEER HARDY L. WILLIS 1/14/14

STATE OF NORTH CAROLINA
DEPARTMENT OF TRANSPORTATION
RALEIGH

SUBSTRUCTURE
END BENT NO. 1
DETAILS

DWN. BY: CJR DATE: 11/2013
CHKD. BY: HLW DATE: 11/2013
ENG. OF REC.: RTS DATE: 11/2013

REVISIONS							
NO.	BY:	DATE:	NO.	BY:	DATE:	SHEET NO.	
1			3			S-15	
2			4			TOTAL SHEETS 22	

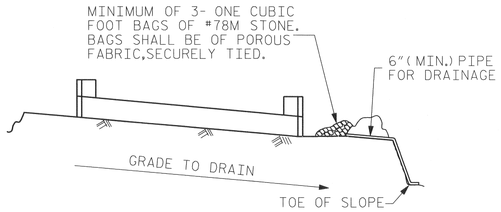

BAGGED STONE AND PIPE SHALL BE PLACED IMMEDIATELY AFTER COMPLETION OF END BENT EXCAVATION. PIPE MAY BE EITHER CONCRETE, CORRUGATED STEEL, CORRUGATED ALUMINUM ALLOY, OR CORRUGATED PLASTIC. PERFORATED PIPE WILL NOT BE ALLOWED.

BAGGED STONE SHALL REMAIN IN PLACE UNTIL THE ENGINEER DIRECTS THAT IT BE REMOVED. THE CONTRACTOR SHALL REMOVE AND DISPOSE OF SILT ACCUMULATIONS AT BAGGED STONE WHEN SO DIRECTED BY THE ENGINEER. BAGS SHALL BE REMOVED AND REPLACED WHENEVER THE ENGINEER DETERMINES THAT THEY HAVE DETERIORATED AND LOST THEIR EFFECTIVENESS.

NO SEPARATE PAYMENT WILL BE MADE FOR THIS WORK AND THE ENTIRE COST OF THIS WORK SHALL BE INCLUDED IN THE UNIT CONTRACT PRICE BID FOR THE SEVERAL PAY ITEMS.

TEMPORARY DRAINAGE AT END BENT

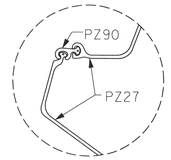

DETAIL "B"

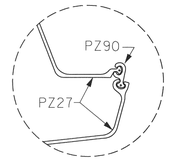

DETAIL "C"

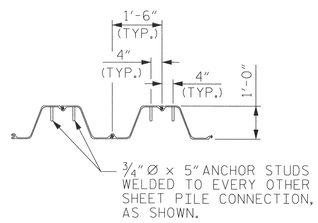

ANCHOR STUD DETAIL

SHEET PILE CONNECTION DETAILS

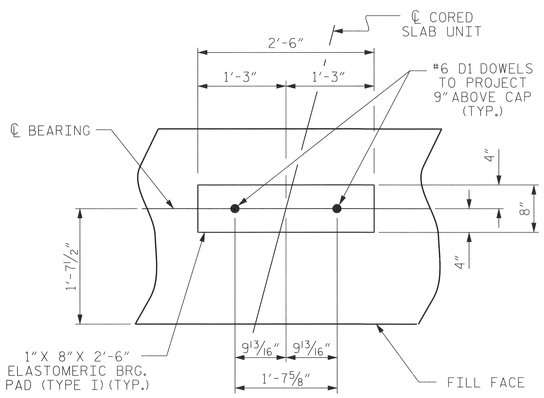

DETAIL "A"

(END BENT No. 1 SHOWN, END BENT No. 2 SIMILAR BY ROTATION)

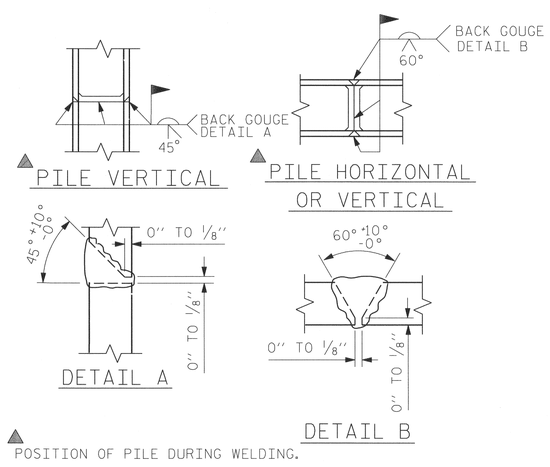

▲ POSITION OF PILE DURING WELDING.

PILE SPLICE DETAILS

SCALE- 7/16" = 1'-0"

BAR TYPES

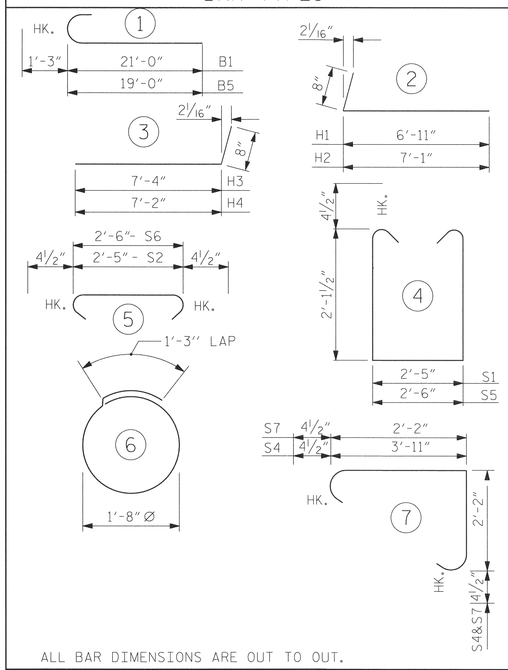

ALL BAR DIMENSIONS ARE OUT TO OUT.

HP 12 X 53 STEEL PILES NO: 5 LIN. FT.= 163

18" STEEL SHEET PILES

NO. PZ27 = 38

NO. PZ90 = 2

TOTAL = 40 SQ. FT. = 994

BILL OF MATERIAL FOR END BENT 1

STAGE I						STAGE II					
BAR	NO.	SIZE	TYPE	LENGTH	WEIGHT	BAR	NO.	SIZE	TYPE	LENGTH	WEIGHT
B1	8	#9	1	22'-3"	605	B3	5	#4	STR	2'-5"	8
B2	8	#4	STR	21'-3"	114	B5	8	#9	1	20'-3"	551
B3	5	#4	STR	2'-5"	8	B6	8	#4	STR	18'-4"	98
B4	5	#4	STR	22'-7"	75	B7	5	#4	STR	19'-10"	66
B8	5	#4	STR	9'-0"	30	B8	5	#4	STR	9'-0"	30
D1	10	#6	STR	1'-6"	23	D1	10	#6	STR	1'-6"	23
H3	6	#4	3	8'-0"	32	H1	6	#4	2	7'-7"	30
H4	6	#4	3	7'-10"	31	H2	6	#4	2	7'-9"	31
K1	6	#4	STR	3'-1"	12	K1	6	#4	STR	3'-1"	12
S1	23	#4	4	7'-5"	114	S1	25	#4	4	7'-5"	124
S2	23	#4	5	3'-2"	49	S2	25	#4	5	3'-2"	53
S3	6	#4	6	6'-6"	26	S3	4	#4	6	6'-6"	17
S4	20	#4	7	6'-10"	91	S4	20	#4	7	6'-10"	91
S5	1	#4	4	7'-6"	5	S5	1	#4	4	7'-6"	5
S6	1	#4	5	3'-3"	2	S6	1	#4	5	3'-3"	2
S7	10	#4	7	5'-1"	34	S7	10	#4	7	5'-1"	34
V1	26	#4	STR	4'-8"	81	V1	24	#4	STR	4'-8"	75
STAGE I SUBTOTAL: 1332 LBS.						STAGE II SUBTOTAL: 1250 LBS.					

STAGE I

CLASS A CONCRETE BREAKDOWN

POUR #1	CAP, LOWER PART OF WINGS	9.6 C.Y.
POUR #2	UPPER PART OF WINGS	0.9 C.Y.
TOTAL CLASS A CONCRETE		10.5 C.Y.

STAGE II

CLASS A CONCRETE BREAKDOWN

POUR #1	CAP, LOWER PART OF WINGS	9.4 C.Y.
POUR #2	UPPER PART OF WINGS	0.9 C.Y.
TOTAL CLASS A CONCRETE		10.3 C.Y.

TOTAL BILL MATERIAL FOR END BENT 1

CLASS A CONCRETE	REINF. STEEL	HP 12 X 53 STEEL PILES		18" STEEL SHEET PILES
CU. YDS.	LBS	NO.	LIN. FT.	SQ. FT.
20.8	2582	5	160	994

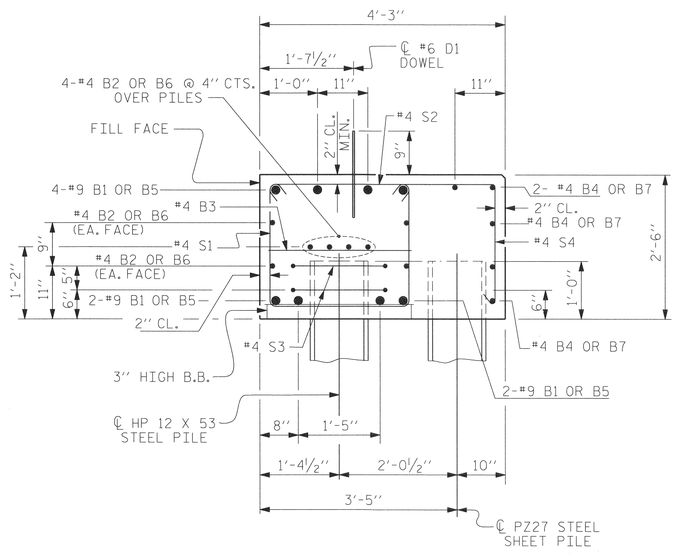

SECTION A-A

PROJECT NO. 17BP.14.R.132

HENDERSON COUNTY

STATION: 12+28.00 -L-

SHEET 4 OF 4

STATE OF NORTH CAROLINA
DEPARTMENT OF TRANSPORTATION
RALEIGH

SUBSTRUCTURE

END BENT No. 1 DETAILS

REVISIONS						SHEET NO.
NO.	BY:	DATE:	NO.	BY:	DATE:	S-16
1			3			TOTAL SHEETS
2			4			22

ASSEMBLED BY :	CJR	DATE : 11/2013	
CHECKED BY :	HLW	DATE : 11/2013	
DRAWN BY : DGE	03/10		
CHECKED BY : MKT	03/10		

$$$$$$SYSTIME$$$$$
$$$$$$$$$$$$$$$$$$$$$$$$DGN$$$$$$$$$$$$$$$$$$$$$$$
$$$$USERNAME$$$$

STD. NO. EB_30_75S

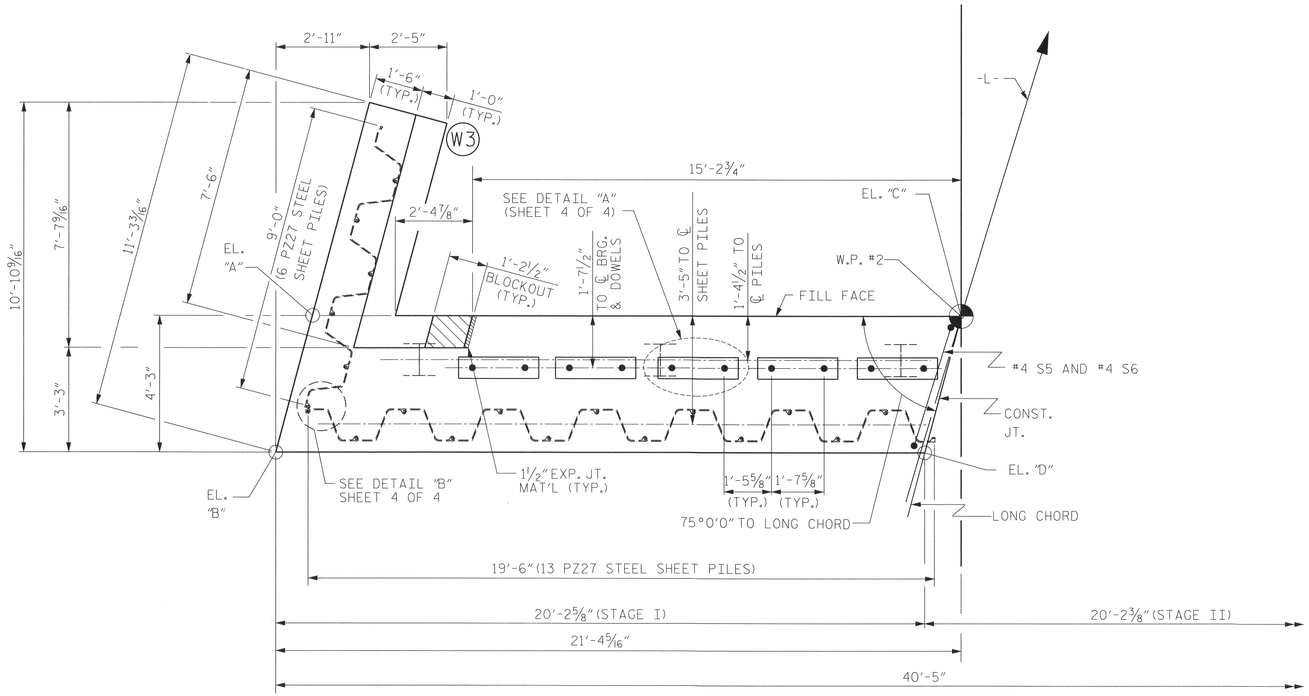

PLAN

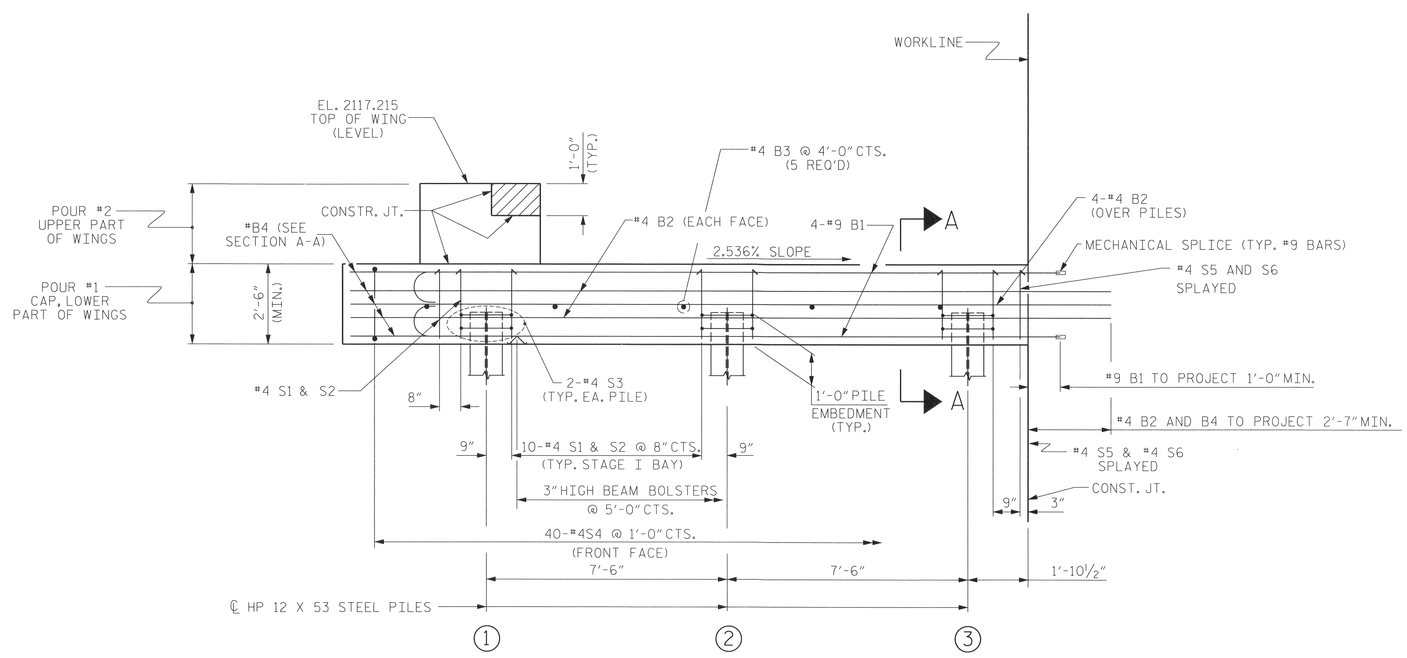

ELEVATION

WINGS NOT SHOWN FOR CLARITY.
FOR SECTION A-A, SEE SHEET 4 OF 4.
SHEET PILES NOT SHOWN FOR CLARITY

NOTES

STIRRUPS IN CAP MAY BE SHIFTED AS NECESSARY TO CLEAR DOWELS.

THE CONCRETE IN THE SHADED AREA OF THE WING SHALL BE POURED AFTER THE VERTICAL CONCRETE BARRIER RAIL IS CAST IF SLIP FORMING IS USED.

FOR PILE SPLICE DETAILS, SEE SHEET 4 OF 4.

FOR WING DETAILS, SEE SHEET 3 OF 4.

TOP OF PILE ELEVATIONS	
1	2113.090
2	2112.899
3	2112.709

	TOP OF CAP ELEVATIONS	BOTTOM OF CAP ELEVATIONS
A	2114.715	2112.215
B	2114.690	2112.190
C	2114.203	2111.703
D	2114.178	2111.678

NORTH CAROLINA PROFESSIONAL SEAL 24 ENGINEER HARDY L. WILLIS 11/14/14

PROJECT NO. 17BP.14.R.132
HENDERSON COUNTY
STATION: 12+28.00 -L-

SHEET 1 OF 4

Vaughn & Melton Consulting Engineers
Asheville, North Carolina 828-253-2796
Charlotte, North Carolina 704-357-0488
Tri-Cities, Tennessee 423-467-8400
Knoxville, Tennessee 865-546-5800
Middlesboro, Kentucky 606-248-6600
Spartanburg, South Carolina 864-574-4775

Copyright © 2006 Vaughn & Melton, Inc. All Rights Reserved

STATE OF NORTH CAROLINA
DEPARTMENT OF TRANSPORTATION
RALEIGH

SUBSTRUCTURE
END BENT No. 2
STAGE I

DWN. BY: CJR DATE: 11/2013
CHKD. BY: HLW DATE: 11/2013
ENG. OF REC.: RTS DATE: 11/2013

REVISIONS						
NO.	BY:	DATE:	NO.	BY:	DATE:	
1			3			
2			4			

SHEET NO. S-17
TOTAL SHEETS 22

NOTES

STIRRUPS IN CAP MAY BE SHIFTED AS NECESSARY TO CLEAR DOWELS.

THE CONCRETE IN THE SHADED AREA OF THE WING SHALL BE POURED AFTER THE VERTICAL CONCRETE BARRIER RAIL IS CAST IF SLIP FORMING IS USED.

FOR PILE SPLICE DETAILS, SEE SHEET 4 OF 4.

FOR WING DETAILS, SEE SHEET 3 OF 4.

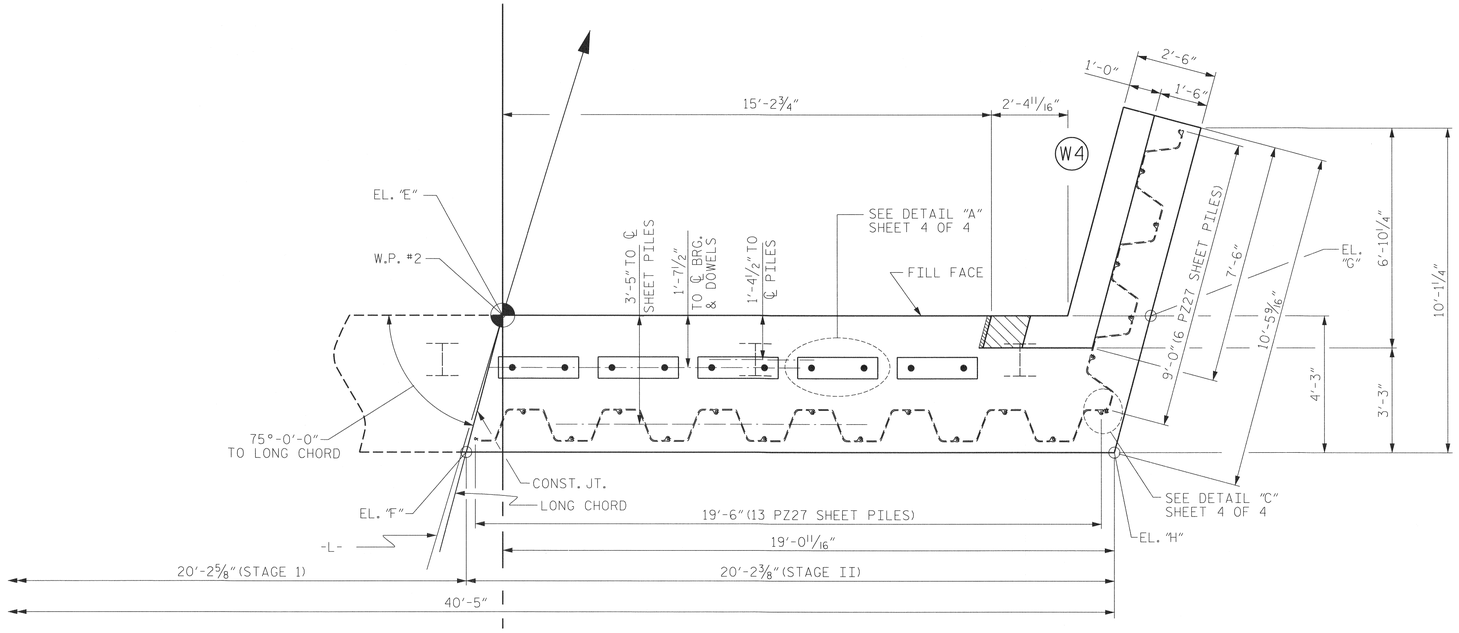

PLAN

TOP OF PILE ELEVATIONS	
4	2112.481
5	2112.253

	TOP OF CAP ELEVATIONS	BOTTOM OF CAP ELEVATIONS
E	2114.203	2111.703
F	2114.178	2111.678
G	2113.690	2111.190
H	2113.665	2111.165

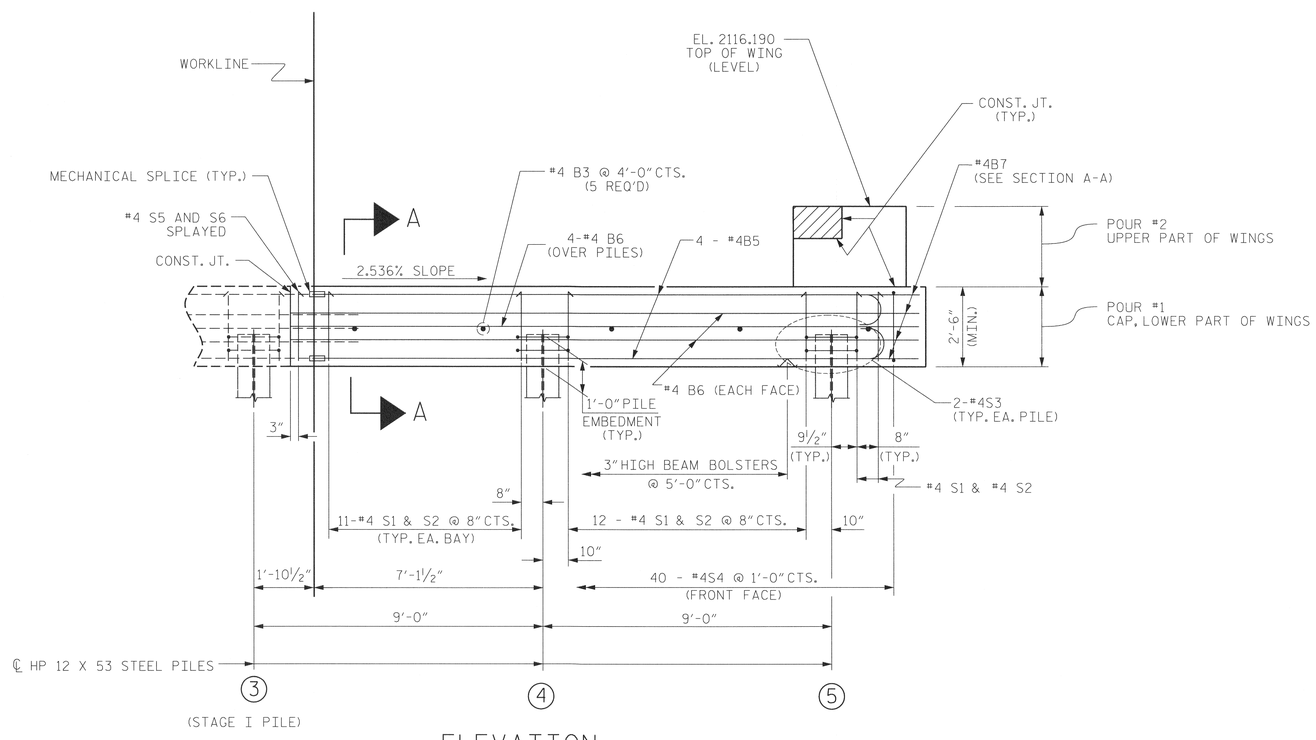

ELEVATION

WINGS NOT SHOWN FOR CLARITY.
FOR SECTION A-A, SEE SHEET 4 OF 4.
SHEET PILES NOT SHOWN FOR CLARITY

NORTH CAROLINA PROFESSIONAL SEAL 20777 ENGINEER HARDY L. WILLIS 1/14/14

PROJECT NO. 17BP.14.R.132

HENDERSON COUNTY

STATION: 12+28.00 -L-

SHEET 2 OF 4

V&M Vaughn & Melton Consulting Engineers
Asheville, North Carolina 828-253-2796
Charlotte, North Carolina 704-357-0488
Tri-Cities, Tennessee 423-467-8401
Knoxville, Tennessee 865-546-5800
Middlesboro, Kentucky 606-248-6600
Spartanburg, South Carolina 864-574-4775

Copyright © 2006 Vaughn & Melton, Inc. All Rights Reserved

STATE OF NORTH CAROLINA
DEPARTMENT OF TRANSPORTATION
RALEIGH

SUBSTRUCTURE
END BENT No. 2
STAGE II

DWN. BY: CJR DATE: 11/2013
CHKD. BY: HLW DATE: 11/2013
ENG. OF REC.: RTS DATE: 11/2013

REVISIONS						
NO.	BY:	DATE:	NO.	BY:	DATE:	
1			3			
2			4			

SHEET NO. S-18

TOTAL SHEETS 22