This electronic collection of documents is provided for the convenience of the user and is Not a Certified Document –

The documents contained herein were originally issued and sealed by the individuals whose names and license numbers appear on each page, on the dates appearing with their signature on that page.
This file or an individual page shall not be considered a certified document.

NO: 17BP.14.R.134

CONTRACT: DN00114

STATE	STATE PROJECT REFERENCE NO.	SHEET NO.	TOTAL SHEETS
N.C.	17BP.14.R.134		

STATE PROJ. NO.	F. A. PROJ. NO.	DESCRIPTION
45360.1.27	BRZ-1105(23)	P.E.
45360.2.27	BRZ-1105(23)	R/W & UTIL.
17BP.14.R.134		CONST.

STATE OF NORTH CAROLINA

DIVISION OF HIGHWAYS

TRANSYLVANIA COUNTY

BRIDGE NO. 117 OVER EAST FORK CREEK OF THE FRENCH BROAD RIVER ON SR 1105

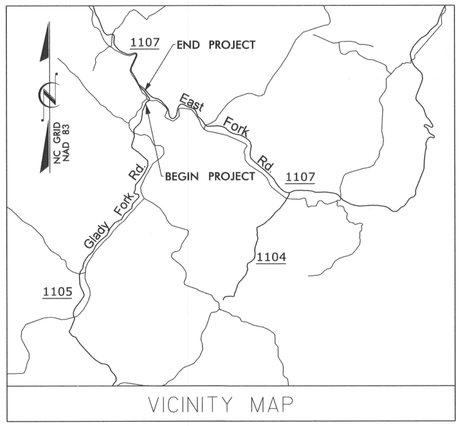

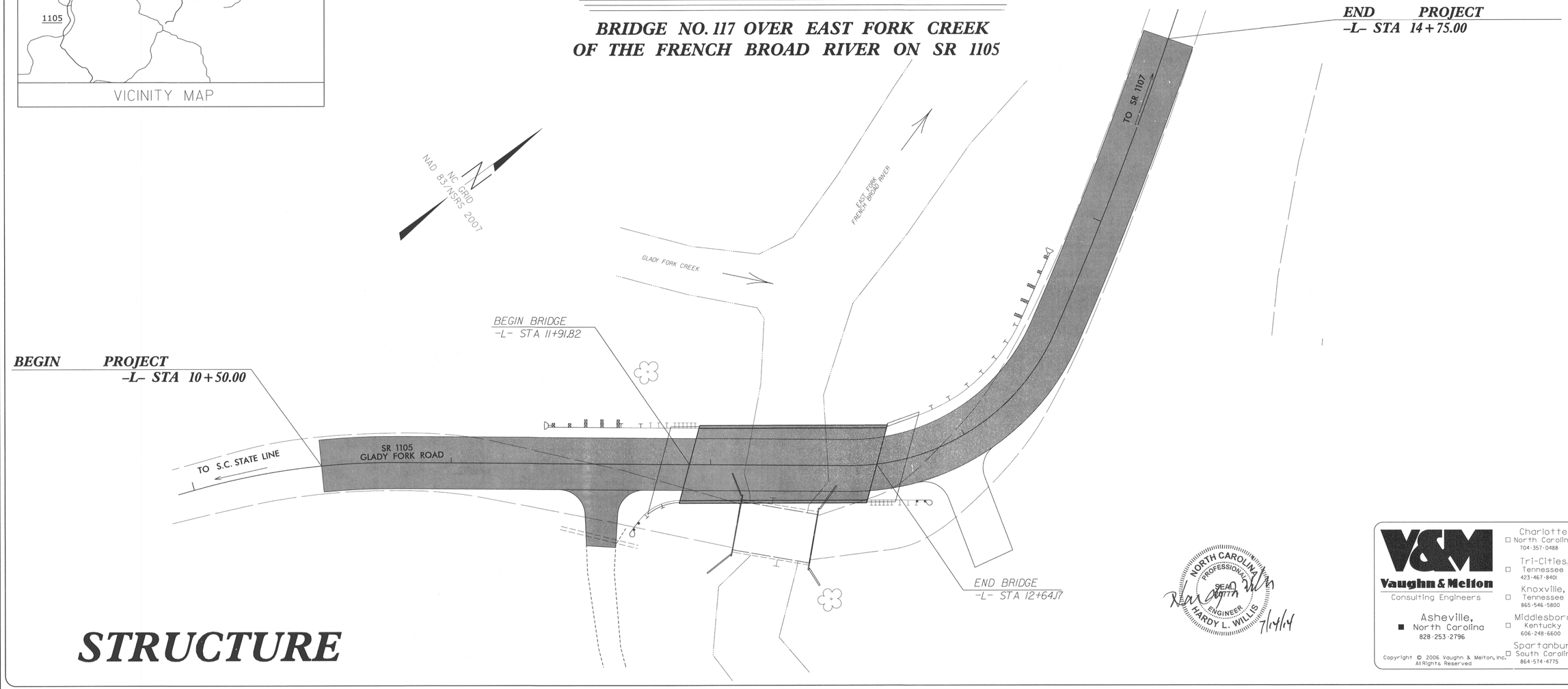

STRUCTURE

NORTH CAROLINA PROFESSIONAL SEAL 031775 ENGINEER HARDY L. WILLIS 7/14/14

V&M Vaughn & Melton Consulting Engineers

Asheville, North Carolina 828-253-2796

Charlotte, North Carolina 704-357-0488

Tri-Cities, Tennessee 423-467-8401

Knoxville, Tennessee 865-546-5800

Middlesboro, Kentucky 606-248-6600

Spartanburg, South Carolina 864-574-4775

Copyright © 2006 Vaughn & Melton, Inc. All Rights Reserved

STATE OF NORTH CAROLINA DEPARTMENT OF TRANSPORTATION

DESIGN DATA

ADT 2011 = 120

ADT 2025 = 240

T = 6%

V = 20 MPH

FUNCT. CLASS = LOCAL

PROJECT LENGTH

LENGTH ROADWAY	PROJECT 17BP.14.R.134 =	0.066 MI
LENGTH STRUCTURE	PROJECT 17BP.14.R.134 =	0.014 MI
TOTAL LENGTH OF	PROJECT 17BP.14.R.134 =	0.080 MI

Prepared in the Office of:

VAUGHN & MELTON

1318-F PATTON AVE.
ASHEVILLE NC, 28806

FOR THE NORTH CAROLINA DIVISION OF HIGHWAYS

2012 STANDARD SPECIFICATIONS

LETTING DATE :

HARDY WILLIS, PE
PROJECT ENGINEER

RYAN SHIPMAN, EI
PROJECT DESIGN ENGINEER

STRUCTURES MANAGEMENT UNIT
1000 BIRCH RIDGE DR.
RALEIGH, N.C. 27610

DIVISION OF HIGHWAYS
STATE OF NORTH CAROLINA

P.E.
STATE DESIGN ENGINEER

DEPARTMENT OF TRANSPORTATION
FEDERAL HIGHWAY ADMINISTRATION

APPROVED
DIVISION ADMINISTRATOR DATE

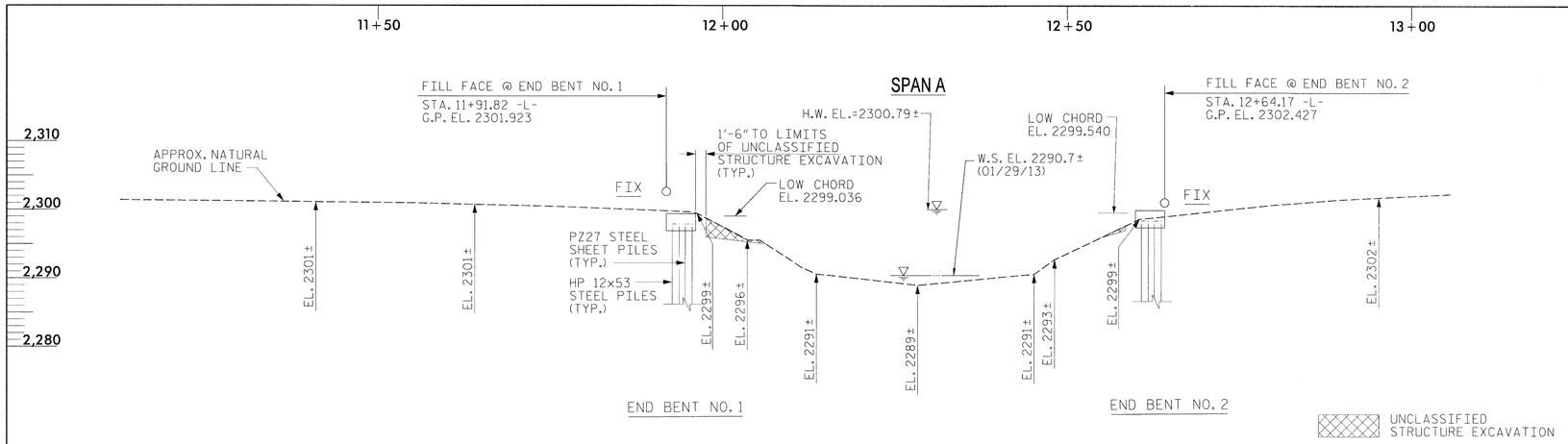

SECTION ALONG -L-

SECTIONS AT END BENTS ARE AT RIGHT ANGLES.

PI = 13+00.00
EL = 2,302.56'
VC = 120'

GRADE DATA -L-

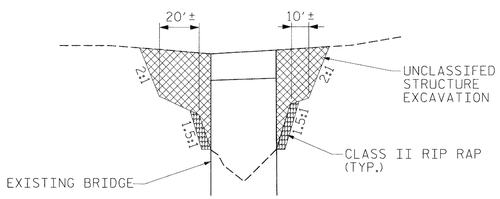

SECTION A-A

SECTION ALONG EXISTING BRIDGE

PI STA. 13+10.27
△ = 66° 45' 39.8" (LT)
D = 66° 37' 22.8"
L = 100.21'
T = 56.66'
R = 86.00'

HORIZONTAL CURVE DATA -L-

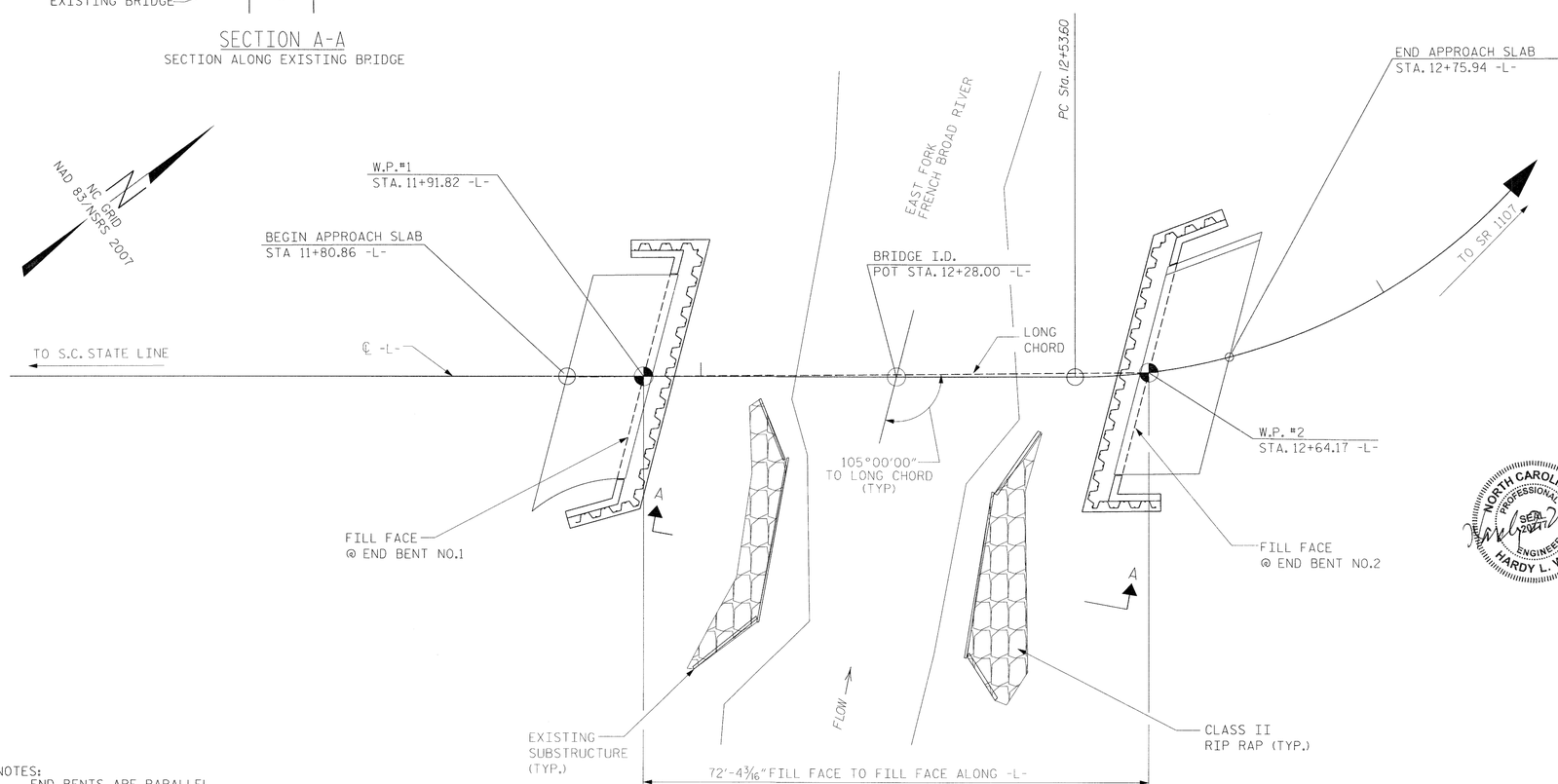

PLAN ALONG -L-

NOTES:
END BENTS ARE PARALLEL.
PILES NOT SHOWN IN PLAN VIEW FOR CLARITY.
CORED SLABS ARE PARALLEL TO LONG CHORD.

NORTH CAROLINA PROFESSIONAL SEAL ENGINEER HARDY L. WILLIS 1/17/14

I HEREBY CERTIFY THAT THESE PLANS ARE THE AS-BUILT PLANS.

PROJECT NO. 17BP.14.R.134

TRANSYLVANIA COUNTY

STATION: 12+28.00 -L-

SHEET 1 OF 3 REPLACES BRIDGE NO. 117

V&M
Vaughn & Melton
Consulting Engineers
Asheville, North Carolina 828-253-2796
Charlotte, North Carolina 704-357-0488
Tri-Cities, Tennessee 423-467-8401
Knoxville, Tennessee 865-546-5800
Middlesboro, Kentucky 606-248-6400
Spartanburg, South Carolina 864-574-4175

Copyright © 2006 Vaughn & Melton, Inc. All Rights Reserved

STATE OF NORTH CAROLINA
DEPARTMENT OF TRANSPORTATION
RALEIGH

GENERAL DRAWING

BRIDGE on SR 1105 (GLADY FORK ROAD)
over EAST FORK OF THE
FRENCH BROAD RIVER
Between S.C. STATE LINE & SR 1107

DWN. BY: AW	DATE: 01/2014	
CHKD. BY: HLW	DATE: 01/2014	
DES. EGR. OF RECORD: RTS	DATE: 01/2014	

REVISIONS

NO.	BY:	DATE:	NO.	BY:	DATE:
1			3		
2			4		

SHEET NO. S-1

TOTAL SHEETS 23

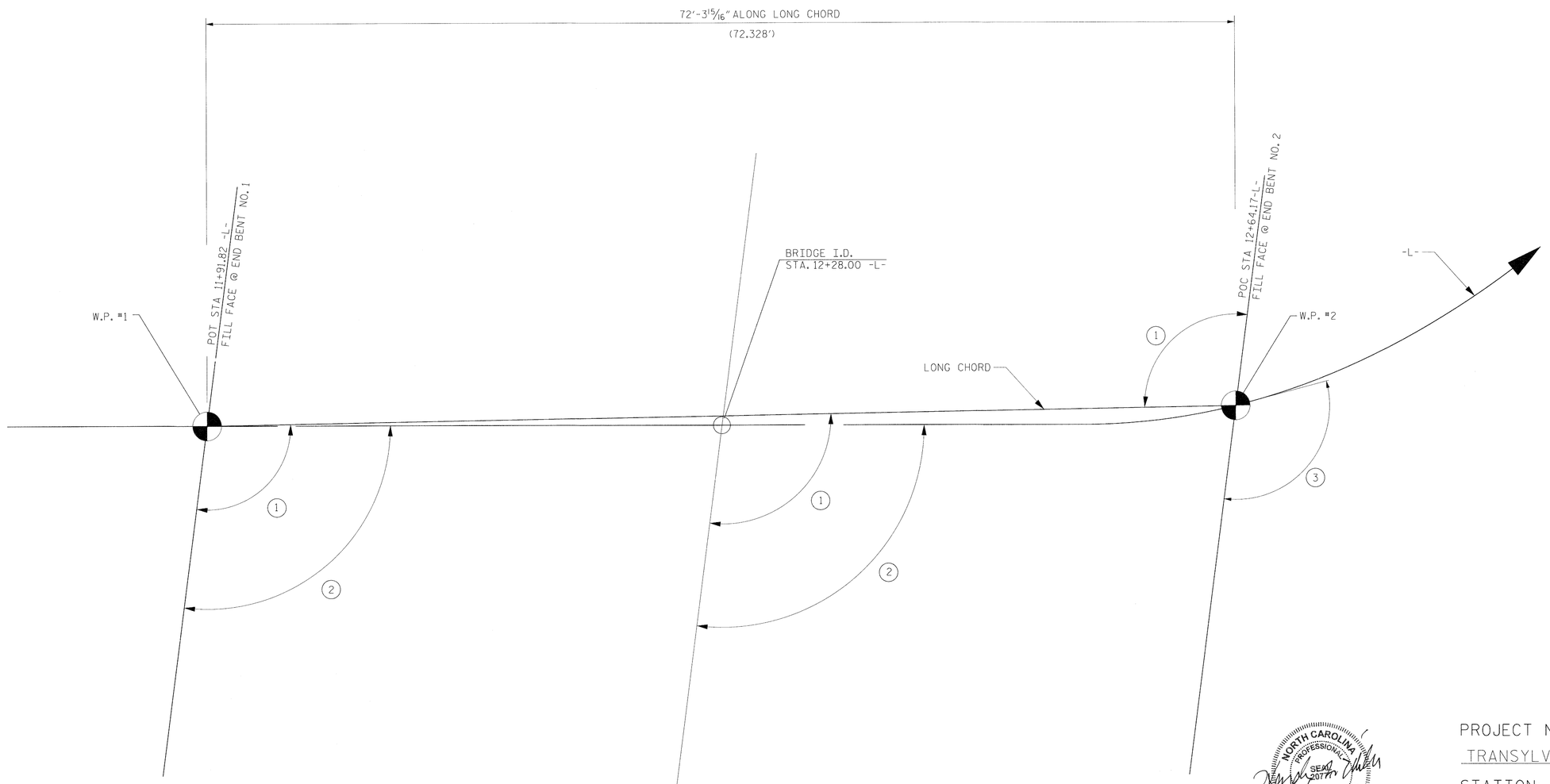

LONG CHORD LAYOUT

END BENTS ARE PARALLEL.

(1) 105°0'00" TO LONG CHORD

(2) 104°29'09" TAN TO CURVE, ℄ SURVEY -L-

(3) 111°31'41" TAN TO CURVE, ℄ SURVEY -L-

NORTH CAROLINA PROFESSIONAL SEAL 20770 ENGINEER HARDY L. WILLIS 7/14/14

PROJECT NO. 17BP.14.R.134

TRANSYLVANIA COUNTY

STATION: 12+28.00 -L-

SHEET 2 OF 3

V&M Vaughn & Melton Consulting Engineers

Asheville, North Carolina 828-253-2796

Charlotte, North Carolina 704-357-0488

Tri-Cities, Tennessee 423-467-8401

Knoxville, Tennessee 865-546-5800

Middlesboro, Kentucky 606-248-6600

Spartanburg, South Carolina 864-574-4775

Copyright © 2006 Vaughn & Melton, Inc. All Rights Reserved

STATE OF NORTH CAROLINA
DEPARTMENT OF TRANSPORTATION
RALEIGH

LONG CHORD LAYOUT

BRIDGE on SR 1105 (GLADY FORK ROAD) over EAST FORK OF THE FRENCH BROAD RIVER Between S.C. STATE LINE & SR 1107

DWN. BY: AW DATE: 01/2014
CHKD. BY: HLW DATE: 01/2014
DES. EGR. OF RECORD: RTS DATE: 01/2014

REVISIONS						
NO.	BY:	DATE:	NO.	BY:	DATE:	
1			3			
2			4			

SHEET NO. S-2

TOTAL SHEETS 23

BM#1 N519762.2552, E875478.1094, STA.12+88 -L- , 42.48 RT., ELEV=2301.17' RR SPIKE IN BASE OF 12" WALNUT

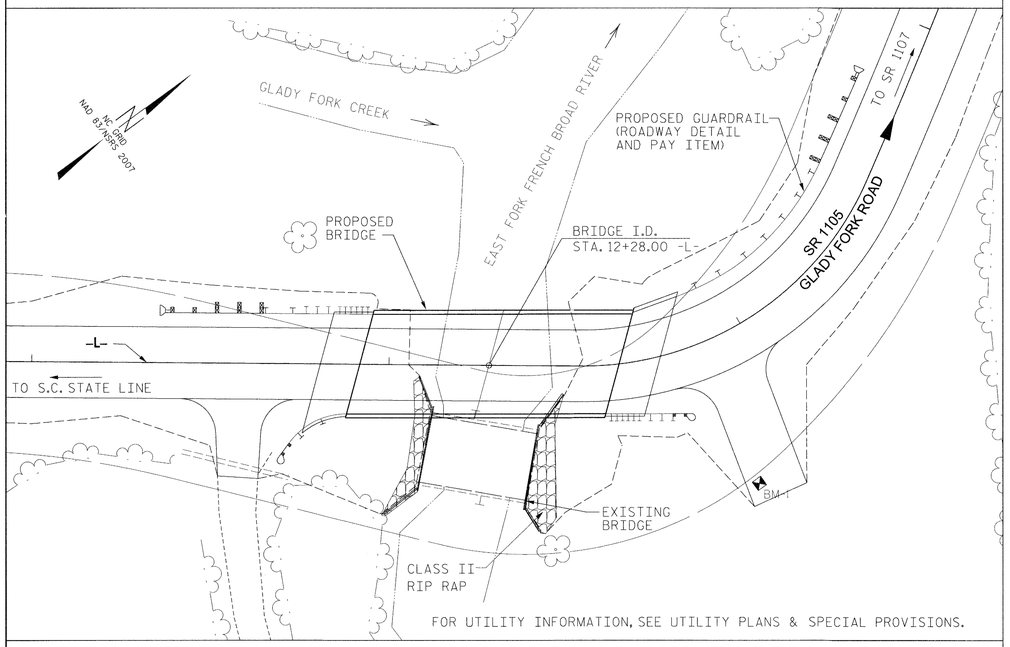

FOR UTILITY INFORMATION, SEE UTILITY PLANS & SPECIAL PROVISIONS.

LOCATION SKETCH

HYDRAULIC DATA

DESIGN DISCHARGE	= 2100	CFS
DESIGN FREQUENCY	= 25	YRS
DESIGN HW ELEVATION	= 2299.1	FT
BASE DISCHARGE	= 2900	CFS
BASE FREQUENCY	= 100	YRS
BASE HW ELEVATION	= 2300.79	FT

OVERTOPPING FLOOD DATA

OVERTOPPING DISCHARGE	= 4300	CFS
OVERTOPPING FREQUENCY	= > 500	YRS
OVERTOPPING ELEVATION	= 2302.1	FT
DRAINAGE AREA	= 9.7	SQ. MI.

GENERAL NOTES:

ASSUMED LIVE LOAD = HL-93 OR ALTERNATE LOADING.

THIS BRIDGE HAS BEEN DESIGNED IN ACCORDANCE WITH THE REQUIREMENTS OF THE AASHTO LRFD BRIDGE DESIGN SPECIFICATIONS.

THIS BRIDGE IS LOCATED IN SEISMIC ZONE 1.

FOR OTHER DESIGN DATA AND GENERAL NOTES, SEE SHEET SN.

FOR EROSION CONTROL MEASURES, SEE EROSION CONTROL PLANS.

THE EXISTING STRUCTURE, CONSISTING OF A SINGLE SPAN, 30'-6" LONG TIMBER DECK ON STEEL I- BEAMS, 20'-9" WIDE, ON TIMBER VERTICAL END BENTS, AND LOCATED AT THE PROPOSED STRUCTURE, SHALL BE REMOVED. THE EXISTING BRIDGE IS PRESENTLY POSTED BELOW THE LEGAL LOAD LIMIT. SHOULD THE STRUCTURAL INTEGRITY OF THE BRIDGE FURTHER DETERIORATE, THIS LOAD LIMITATION MAY BE REDUCED AS FOUND NECESSARY DURING THE LIFE OF THE PROJECT.

REMOVAL OF THE EXISTING BRIDGE SHALL BE PERFORMED SO AS NOT TO ALLOW DEBRIS TO FALL INTO THE WATER. THE CONTRACTOR SHALL REMOVE THE BRIDGE AND SUBMIT PLANS FOR DEMOLITION IN ACCORDANCE WITH ARTICLE 402-2 OF THE STANDARD SPECIFICATIONS.

THE SUBSTRUCTURE OF THE EXISTING BRIDGE INDICATED ON THE PLANS IS FROM THE BEST INFORMATION AVAILABLE. SINCE THIS INFORMATION IS SHOWN FOR THE CONVENIENCE OF THE CONTRACTOR, THE CONTRACTOR SHALL HAVE NO CLAIM WHATSOEVER AGAINST THE DEPARTMENT OF TRANSPORTATION FOR ANY DELAYS OR ADDITIONAL COST INCURRED BASED ON DIFFERENCES BETWEEN THE EXISTING BRIDGE SUBSTRUCTURE SHOWN ON THE PLANS AND THE ACTUAL CONDITIONS AT THE PROJECT SITE.

THIS STRUCTURE HAS BEEN DESIGNED IN ACCORDANCE WITH "HEC 18-EVALUATING SCOUR AT BRIDGES."

FOR SUBMITTAL OF WORKING DRAWINGS, SEE SPECIAL PROVISIONS.

FOR FALSEWORK AND FORMWORK, SEE SPECIAL PROVISIONS.

FOR CRANE SAFETY, SEE SPECIAL PROVISIONS.

FOR GROUT FOR STRUCTURES, SEE SPECIAL PROVISIONS.

THE MATERIAL SHOWN IN THE CROSS-HATCHED AREA SHALL BE EXCAVATED FOR A DISTANCE OF 25 FT. EACH SIDE OF CENTERLINE ROADWAY AS DIRECTED BY THE ENGINEER. THIS WORK WILL BE PAID FOR AT THE CONTRACT LUMP SUM PRICE FOR UNCLASSIFIED STRUCTURE EXCAVATION. SEE SECTION 412 OF THE STANDARD SPECIFICATIONS.

ASPHALT WEARING SURFACE IS INCLUDED IN ROADWAY QUANTITY ON ROADWAY PLANS.

THE CONTRACTOR SHALL PROVIDE INDEPENDENT ASSURANCE SAMPLES OF REINFORCING STEEL AS FOLLOWS: FOR PROJECTS REQUIRING UP TO 400 TONS OF REINFORCING STEEL, ONE 30 INCH SAMPLE OF EACH SIZE BAR USED, AND FOR PROJECTS REQUIRING OVER 400 TONS OF REINFORCING STEEL, TWO 30 INCH SAMPLES OF EACH SIZE BAR USED. THE BARS FROM WHICH THE SAMPLES ARE TAKEN MUST THEN BE SPLICED WITH REPLACEMENT BARS OF THE SIZE AND LENGTH OF THE SAMPLE, PLUS A MINIMUM LAP SPLICE OF THIRTY BAR DIAMETERS. PAYMENT FOR THE SAMPLES OF REINFORCING STEEL SHALL BE CONSIDERED INCIDENTAL TO VARIOUS PAY ITEMS.

INASMUCH AS THE PAINT SYSTEM ON THE EXISTING STRUCTURAL STEEL CONTAINS LEAD, THE CONTRACTOR'S ATTENTION IS DIRECTED TO ARTICLE 107-1 OF THE STANDARD SPECIFICATIONS. ANY COSTS RESULTING FROM COMPLIANCE WITH APPLICABLE STATE OR FEDERAL REGULATIONS PERTAINING TO HANDLING OF MATERIALS CONTAINING LEAD BASED PAINT SHALL BE INCLUDED IN THE BID PRICE FOR "REMOVAL OF EXISTING STRUCTURE AT STATION 12+28.00."

FOUNDATION NOTES:

FOR PILES, SEE SECTION 450 OF THE STANDARD SPECIFICATIONS.

PILES AT END BENT NO. 1 ARE DESIGNED FOR A FACTORED RESISTANCE OF 100 TONS PER PILE.

DRIVE PILES AT END BENT NO. 1 TO A REQUIRED DRIVING RESISTANCE OF 170 TONS PER PILE.

PILES AT END BENT NO. 2 ARE DESIGNED FOR A FACTORED RESISTANCE OF 100 TONS PER PILE.

DRIVE PILES AT END BENT NO. 2 TO A REQUIRED DRIVING RESISTANCE OF 170 TONS PER PILE.

IT HAS BEEN ESTIMATED THAT A HAMMER WITH AN EQUIVALENT RATED ENERGY IN THE RANGE OF 15,000 TO 30,000 FT-LBS PER BLOW WILL BE REQUIRED TO DRIVE PILES AT END BENT NO. 1 AND END BENT NO. 2. THIS ESTIMATED ENERGY RANGE DOES NOT RELEASE THE CONTRACTOR FROM PROVIDING DRIVING EQUIPMENT IN ACCORDANCE WITH SUBARTICLE 450-3(D)(2) OF THE STANDARD SPECIFICATIONS.

CONCRETE IS REQUIRED TO FILL HOLES FOR PILE EXCAVATION AT END BENT NO. 1 AND END BENT NO. 2.

PILE EXCAVATION IS REQUIRED TO INSTALL PILES AT END BENT NO. 1. EXCAVATE HOLES AT PILE LOCATIONS TO ELEVATION 2282 FT. AND HAVE AT LEAST 5 FEET OF PENETRATION INTO WEATHERED ROCK OR ROCK. SEE SECTION 450 OF THE STANDARD SPECIFICATIONS.

PILE EXCAVATION IS REQUIRED TO INSTALL PILES AT END BENT NO. 2. EXCAVATE HOLES AT PILE LOCATIONS TO ELEVATION 2284 FT. AND HAVE AT LEAST 5 FEET OF PENETRATION INTO WEATHERED ROCK OF ROCK. SEE SECTION 450 OF THE STANDARD SPECIFICATIONS.

FOR STEEL SHEET PILES, SEE SECTION 1084 OF THE STANDARD SPECIFICATIONS.

PZ27 SHEETING IS TO BE DRIVEN IN FRONT (STREAM SIDE) OF THE HP 12X53 PILES AT EACH END BENT AS SHOWN IN THE STRUCTURE PLANS.

SHEET PILES SHOULD BE DRIVEN TO REFUSAL. REFUSAL IS ESTIMATED AT ELEVATION 2285.8 FT. (LT) AND 2287.1 FT. (RT) FOR END BENT NO. 1

SHEET PILES SHOULD BE DRIVEN TO REFUSAL. REFUSAL IS ESTIMATED AT ELEVATION 2287.7 FT. (LT) AND 2288.4 FT. (RT) FOR END BENT NO. 2.

THE SCOUR CRITICAL ELEVATION FOR END BENT NO. 1 IS 2285.0 FT. THE SCOUR CRITICAL ELEVATION FOR END BENT NO. 2 IS 2289.0 FT. SCOUR CRITICAL ELEVATIONS ARE USED TO MONITOR POSSIBLE SCOUR PROBLEMS DURING THE LIFE OF THE STRUCTURE.

TOTAL BILL OF MATERIAL

	REMOVAL OF EXISTING STRUCTURE	PILE EXCAVATION IN SOIL	PILE EXCAVATION NOT IN SOIL	UNCLASSIFIED STRUCTURE EXCAVATION	CLASS A CONCRETE	BRIDGE APPROACH SLABS	REINFORCING STEEL	HP 12 X 53 STEEL PILES		18" STEEL SHEET PILES	VERTICAL CONCRETE BARRIER RAIL	RIP RAP CLASS II (2'-0" THICK)	GEOTEXTILE FOR DRAINAGE	ELASTOMERIC BEARINGS	3'-0" x 2'-0" PRESTRESSED CONCRETE CORED SLAB UNIT	
	LUMP SUM	LIN. FT	LIN. FT	LUMP SUM	CU. YARDS	LUMP SUM	LBS.	NO.	LIN. FT.	SQ. FT.	LIN. FT.	TONS	SQ. YARDS	LUMP SUM	NO.	LIN. FT.
SUPERSTRUCTURE						LUMP SUM					140.26			LUMP SUM	10	700.0
END BENT 1		55	25	LUMP SUM	21.0		2443	5	100	635		22	25			
END BENT 2		50	25	LUMP SUM	21.6		2514	5	75	573		28	32			
TOTAL	LUMP SUM	105	50	LUMP SUM	42.6	LUMP SUM	4957	10	175	1208	140.26	50	57	LUMP SUM	10	700.0

NORTH CAROLINA PROFESSIONAL SEAL ENGINEER HARDY L. WILLIS 7/14/14

PROJECT NO. 17BP.14.R.134

TRANSYLVANIA COUNTY

STATION: 12+28.00 -L-

SHEET 3 OF 3

V&M Vaughn & Melton Consulting Engineers
Asheville, North Carolina 828-253-2796
Charlotte, North Carolina 704-357-0488
Tri-Cities, Tennessee 423-467-8401
Knoxville, Tennessee 865-546-5800
Middlesboro, Kentucky 606-248-6600
Spartanburg, South Carolina 864-574-4175

Copyright © 2006 Vaughn & Melton, Inc. All Rights Reserved

STATE OF NORTH CAROLINA
DEPARTMENT OF TRANSPORTATION
RALEIGH

GENERAL DRAWING
BRIDGE on SR 1105 (GLADY FORK ROAD) over EAST FORK OF THE FRENCH BROAD RIVER Between S.C. STATE LINE & SR 1107

DWN. BY: AW DATE: 01/2014
CHKD. BY: HLW DATE: 01/2014
DES. EGR. OF RECORD: RTS DATE: 01/2014

REVISIONS						SHEET NO.
NO.	BY:	DATE:	NO.	BY:	DATE:	S-3
1			3			TOTAL SHEETS
2			4			23

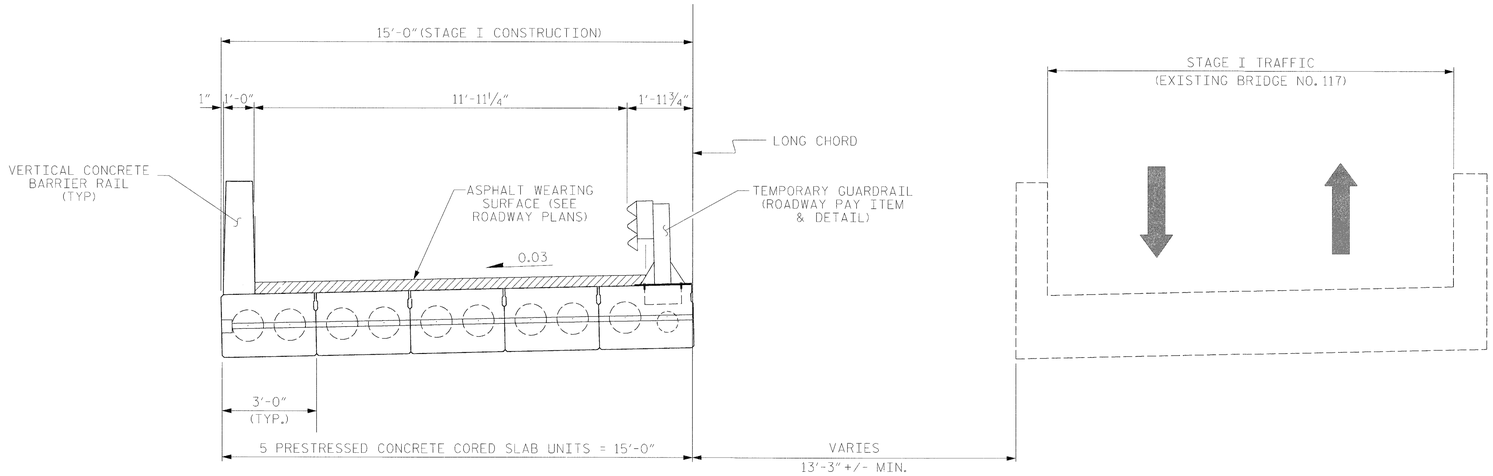

NOTE:
FOR TEMPORARY GUARDRAIL DETAIL & PAY ITEM, SEE ROADWAY PLANS

STAGE I

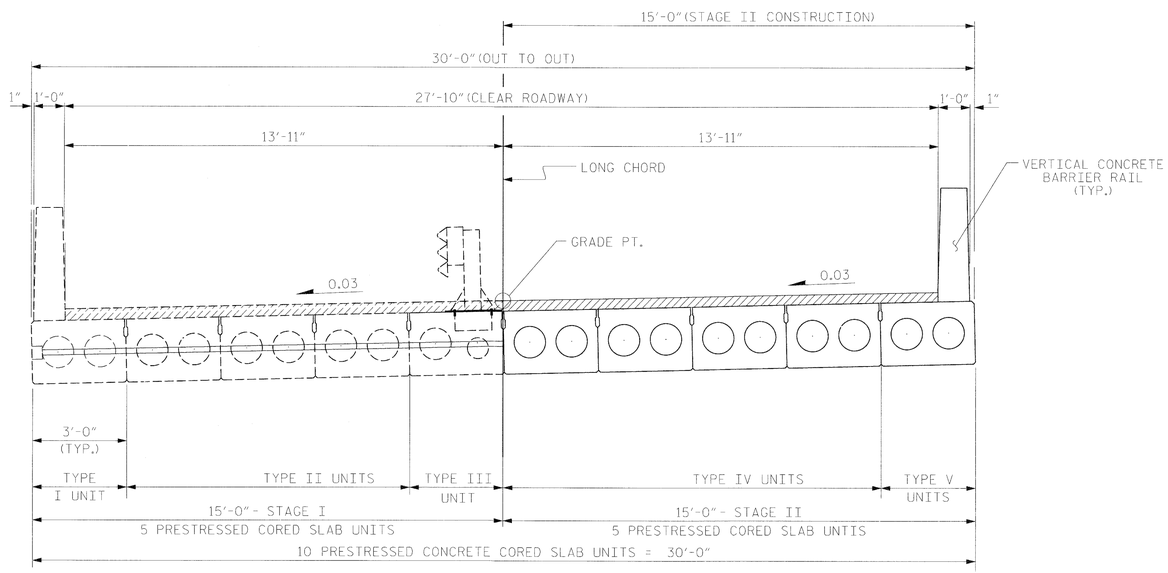

STAGE II

STAGING SEQUENCE

NORTH CAROLINA PROFESSIONAL SEAL ENGINEER HARDY L. WILLIS
1/14/14

PROJECT NO. 17BP.14.R.134
TRANSYLVANIA COUNTY
STATION: 12+28.00 -L-

V&M
Vaughn & Melton
Consulting Engineers
Asheville, North Carolina 828-253-2796
Charlotte, North Carolina 704-357-0488
Tri-Cities, Tennessee 423-467-8401
Knoxville, Tennessee 865-546-5800
Middlesboro, Kentucky 606-248-6600
Spartanburg, South Carolina 864-574-4775

Copyright © 2006 Vaughn & Melton, Inc. All Rights Reserved

STATE OF NORTH CAROLINA
DEPARTMENT OF TRANSPORTATION
RALEIGH

CONSTRUCTION STAGING

DWN. BY: AW DATE: 01/2014
CHKD. BY: HLW DATE: 01/2014
DES. EGR. OF RECORD: RTS DATE: 01/2014

REVISIONS							SHEET NO.
NO.	BY:	DATE:	NO.	BY:	DATE:		S-4
1			3				TOTAL SHEETS
2			4				23

$$$$$$SYSTIME$$$$$
$$$$$$$$$$$$$$$$$$$$$$$$DGN$$$$$$$$$$$$$$$$$$$$$$$$
$$$$USERNAME$$$$

LOAD AND RESISTANCE FACTOR RATING (LRFD) SUMMARY FOR PRESTRESSED CONCRETE GIRDERS

LEVEL		VEHICLE	WEIGHT (W) (TONS)	CONTROLLING LOAD RATING	MINIMUM RATING FACTORS (RF)	TONS = W X RF	STRENGTH I LIMIT STATE											SERVICE III LIMIT STATE						COMMENT NUMBER
								MOMENT					SHEAR						MOMENT					
							LIVELOAD FACTORS	DISTRIBUTION FACTORS (DF)	RATING FACTOR	SPAN	GIRDER LOCATION	DISTANCE FROM LEFT END OF SPAN (ft)	DISTRIBUTION FACTORS (DF)	RATING FACTOR	SPAN	GIRDER LOCATION	DISTANCE FROM LEFT END OF SPAN (ft)	LIVELOAD FACTORS	DISTRIBUTION FACTORS (DF)	RATING FACTOR	SPAN	GIRDER LOCATION	DISTANCE FROM LEFT END OF SPAN (ft)	
DESIGN LOAD RATING		HL-93(Inv)	N/A	1	1.014	--	1.75	0.269	1.04	70'	EL	34.482	0.608	1.1	70'	EL	3.448	0.80	0.269	1.01	70'	EL	34.482	
		HL-93(Opr)	N/A	--	1.355	--	1.35	0.269	1.35	70'	EL	34.482	0.608	1.43	70'	EL	3.448	N/A	--	--	--	--	--	
		HS-20(Inv)	36.000	2	1.315	47.356	1.75	0.269	1.36	70'	EL	34.482	0.608	1.38	70'	EL	3.448	0.80	0.269	1.32	70'	EL	34.482	
		HS-20(Opr)	36.000	--	1.757	63.236	1.35	0.269	1.76	70'	EL	34.482	0.608	1.79	70'	EL	3.448	N/A	--	--	--	--	--	
LEGAL LOAD RATING	SV	SNSH	13.500	--	2.938	39.656	1.4	0.269	3.78	70'	EL	34.482	0.608	4.12	70'	EL	3.448	0.80	0.269	2.94	70'	EL	34.482	
		SNGARBS2	20.000	--	2.203	44.052	1.4	0.269	2.84	70'	EL	34.482	0.608	2.93	70'	EL	3.448	0.80	0.269	2.20	70'	EL	34.482	
		SNAGRIS2	22.000	--	2.092	46.016	1.4	0.269	2.69	70'	EL	34.482	0.608	2.72	70'	EL	3.448	0.80	0.269	2.09	70'	EL	34.482	
		SNCOTTS3	27.250	--	1.462	39.844	1.4	0.269	1.88	70'	EL	34.482	0.608	2.06	70'	EL	3.448	0.80	0.269	1.46	70'	EL	34.482	
		SNAGGRS4	34.925	--	1.227	42.856	1.4	0.269	1.58	70'	EL	34.482	0.608	1.71	70'	EL	3.448	0.80	0.269	1.23	70'	EL	34.482	
		SNS5A	35.550	--	1.2	42.646	1.4	0.269	1.54	70'	EL	34.482	0.608	1.73	70'	EL	3.448	0.80	0.269	1.20	70'	EL	34.482	
		SNS6A	39.950	--	1.103	44.058	1.4	0.269	1.42	70'	EL	34.482	0.608	1.58	70'	EL	3.448	0.80	0.269	1.10	70'	EL	34.482	
		SNS7B	42.000	--	1.05	44.113	1.4	0.269	1.35	70'	EL	34.482	0.608	1.55	70'	EL	3.448	0.80	0.269	1.05	70'	EL	34.482	
	TTST	TNAGRIT3	33.000	--	1.345	44.401	1.4	0.269	1.73	70'	EL	34.482	0.608	1.88	70'	EL	3.448	0.80	0.269	1.35	70'	EL	34.482	
		TNT4A	33.075	--	1.352	44.717	1.4	0.269	1.74	70'	EL	34.482	0.608	1.83	70'	EL	3.448	0.80	0.269	1.35	70'	EL	34.482	
		TNT6A	41.600	--	1.108	46.073	1.4	0.269	1.43	70'	EL	34.482	0.608	1.65	70'	EL	3.448	0.80	0.269	1.11	70'	EL	34.482	
		TNT7A	42.000	--	1.114	46.794	1.4	0.269	1.43	70'	EL	34.482	0.608	1.62	70'	EL	3.448	0.80	0.269	1.11	70'	EL	34.482	
		TNT7B	42.000	--	1.155	48.526	1.4	0.269	1.49	70'	EL	34.482	0.608	1.51	70'	EL	3.448	0.80	0.269	1.16	70'	EL	34.482	
		TNAGRIT4	43.000	--	1.097	47.174	1.4	0.269	1.41	70'	EL	34.482	0.608	1.46	70'	EL	3.448	0.80	0.269	1.10	70'	EL	34.482	
		TNAGT5A	45.000	--	1.033	46.505	1.4	0.269	1.33	70'	EL	34.482	0.608	1.45	70'	EL	3.448	0.80	0.269	1.03	70'	EL	34.482	
		TNAGT5B	45.000	3	1.02	45.905	1.4	0.269	1.31	70'	EL	34.482	0.608	1.39	70'	EL	3.448	0.80	0.269	1.02	70'	EL	34.482	

LOAD FACTORS:

DESIGN LOAD RATING FACTORS	LIMIT STATE	γ_{DC}	γ_{DW}
	STRENGTH I	1.25	1.50
	SERVICE III	1.00	1.00

NOTES:

MINIMUM RATING FACTORS ARE BASED ON THE STRENGTH I AND SERVICE III LIMIT STATES.

ALLOWABLE STRESSES FOR SERVICE III LIMIT STATE ARE AS REQUIRED FOR DESIGN.

COMMENTS:

1.
2.
3.
4.

(#) CONTROLLING LOAD RATING

(1) DESIGN LOAD RATING (HL-93)

(2) DESIGN LOAD RATING (HS-20)

(3) LEGAL LOAD RATING **

** SEE CHART FOR VEHICLE TYPE

GIRDER LOCATION

I - INTERIOR GIRDER
EL - EXTERIOR LEFT GIRDER
ER - EXTERIOR RIGHT GIRDER

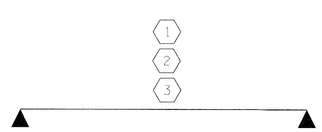

LRFR SUMMARY

FOR SINGLE SPAN

PROJECT NO. 17BP.14.R.134

TRANSYLVANIA COUNTY

STATION: 12+28.00 -L-

STATE OF NORTH CAROLINA
DEPARTMENT OF TRANSPORTATION
RALEIGH

STANDARD
LRFR SUMMARY FOR
70' CORED SLAB UNIT
105° SKEW
(NON-INTERSTATE TRAFFIC)

NORTH CAROLINA PROFESSIONAL SEAL 29011 ENGINEER HARDY L. WILLIS 7/14/14

REVISIONS						SHEET NO.
NO.	BY:	DATE:	NO.	BY:	DATE:	S-5
1			3			TOTAL SHEETS
2			4			23

ASSEMBLED BY :	DPP	DATE :	9/2013
CHECKED BY :	RTS	DATE :	9/2013
DRAWN BY : CVC	6/10		
CHECKED BY : DNS	6/10		

$$$$$$SYSTIME$$$$$
$$$$$$$$$$$$$$$$$$$$DGN$$$$$$$$$$$$$$$$$$$$$$$
$$$$USERNAME$$$$

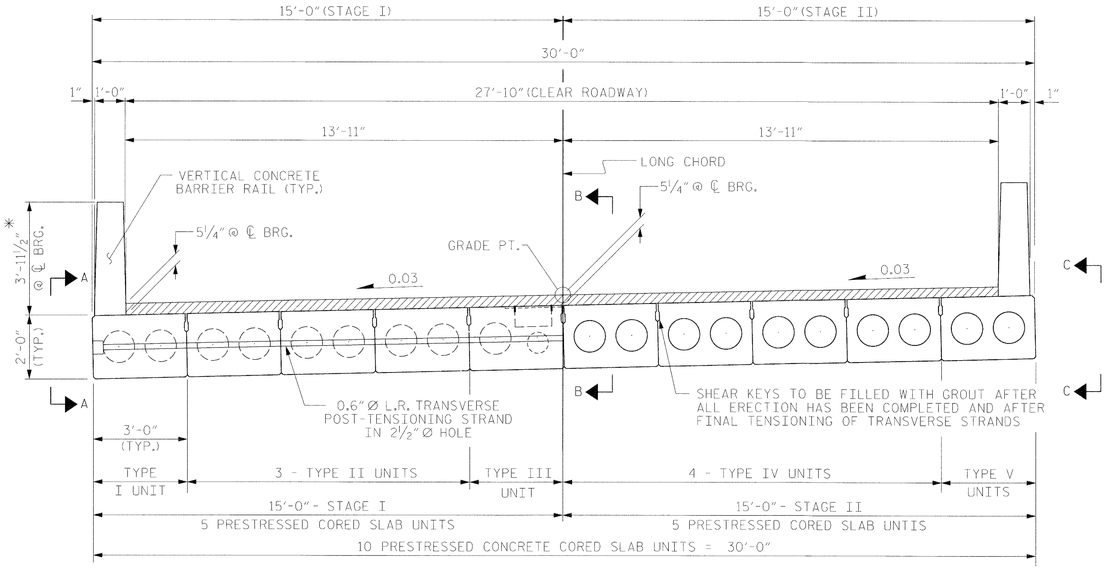

HALF SECTION
AT INTERMEDIATE DIAPHRAGMS

TYPICAL SECTION

HALF SECTION
THROUGH VOIDS

* - THE MAXIMUM BARRIER RAIL HEIGHT AND ASPHALT THICKNESS IS SHOWN. THE HEIGHT OF THE BARRIER RAIL AND ASPHALT THICKNESS VARIES WHILE THE TOP OF THE BARRIER RAIL FOLLOWS THE PROFILE OF THE GUTTERLINE. FOR RAIL HEIGHT DETAILS AND ASPHALT THICKNESS, SEE THE "VERTICAL CONCRETE BARRIER RAIL SECTION" DETAIL.

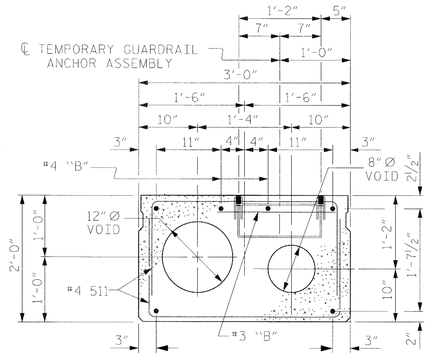

INTERIOR SLAB SECTION

TYPE III

(FOR PRESTRESSED STRAND LAYOUT, SEE "INTERIOR SLAB SECTION - TYPE II, IV)

FOR TEMPORARY GUARDRAIL ANCHOR ASSEMBLY LOCATION, SEE SECTION OF ANCHOR ASSEMBLY LOCATION ON "ANCHORAGE DETAILS FOR TEMPORARY GUARDRAIL ANCHOR ASSEMBLY FOR TYPE III CORED SLAB UNIT" SHEET.

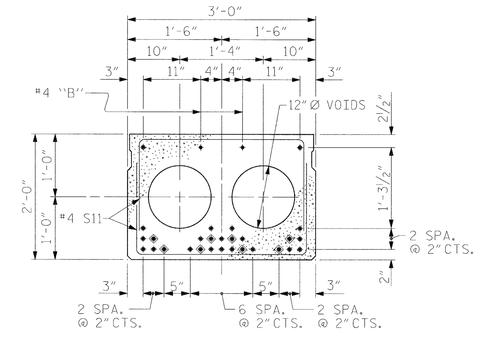

STRAND LAYOUT FOR 70' UNIT

(28 STRANDS REQUIRED)

INTERIOR TYPE II & IV INTERIOR SLAB SECTION

0.6"Ø LOW RELAXATION

◈ BOND SHALL BE BROKEN ON THESE STRANDS FOR A DISTANCE OF 12'-0" FROM END OF CORED SLAB UNIT. SEE STANDARD SPECIFICATIONS, ARTICLE 1078-7.

DEBONDING LEGEND

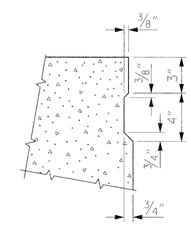

SHEAR KEY DETAIL

NOTE: OMIT SHEAR KEY ON OUTSIDE FACE OF EXTERIOR CORED SLABS.

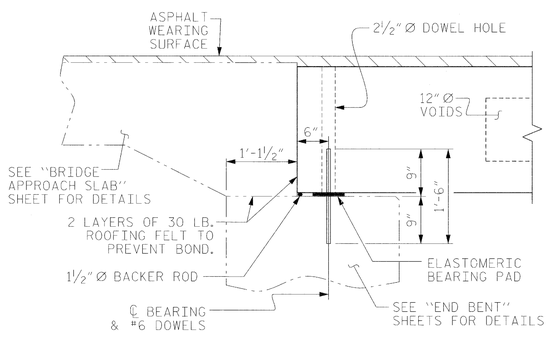

SECTION AT END BENT

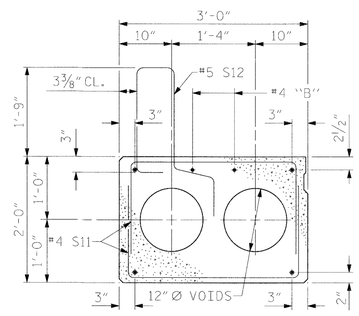

EXTERIOR SLAB SECTION

TYPE I & V

(FOR PRESTRESSED STRAND LAYOUT, SEE INTERIOR SLAB SECTION TYPE II & IV)
(FOR SLAB SECTION TYPE II & IV)

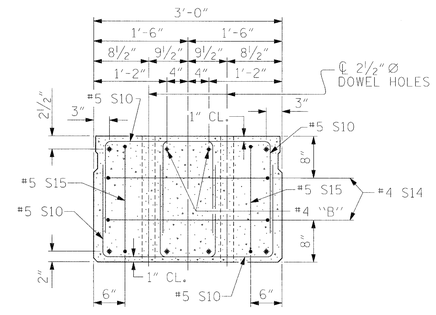

END ELEVATION

SHOWING PLACEMENT OF DOUBLE STIRRUPS AND LOCATION OF DOWEL HOLES. (STRAND LAYOUT NOT SHOWN.) INTERIOR SLAB UNIT SHOWN-EXTERIOR SLAB UNIT SIMILAR EXCEPT SHEAR KEY LOCATION.

PROJECT NO. 17BP.14.R.134
TRANSYLVANIA COUNTY
STATION: 12+28.00 -L-

SHEET 1 OF 5

STATE OF NORTH CAROLINA
DEPARTMENT OF TRANSPORTATION
RALEIGH

STANDARD

3'-0" X 2'-0"
PRESTRESSED CONCRETE
CORED SLAB UNIT

NORTH CAROLINA PROFESSIONAL ENGINEER SEAL 19774 HARDY L. WILLIS 7/14/14

REVISIONS						SHEET NO.
NO.	BY:	DATE:	NO.	BY:	DATE:	S-6
1			3			TOTAL SHEETS
2			4			23

ASSEMBLED BY :	AW	DATE : 01/2014	
CHECKED BY :	RTS	DATE : 01/2014	
DRAWN BY : MAA	6/10	REV. 12/11	MAA/AAC
CHECKED BY : MKT	7/10		

$$$$$$SYSTIME$$$$$
$$$$$$$$$$$$$$$$$$$$$$$$DGN$$$$$$$$$$$$$$$$$$$$$$$$
$$$$USERNAME$$$$

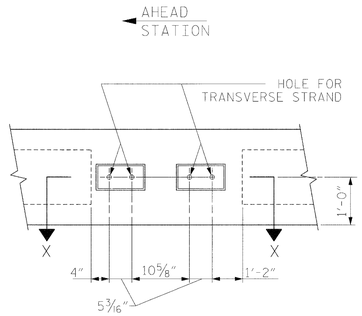

VIEW A-A
SEE SHEET 1 OF 5

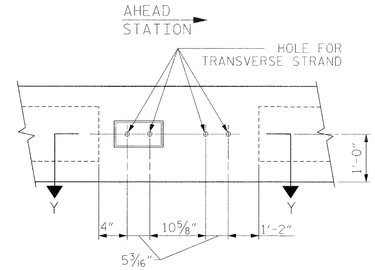

VIEW B-B
SEE SHEET 1 OF 5

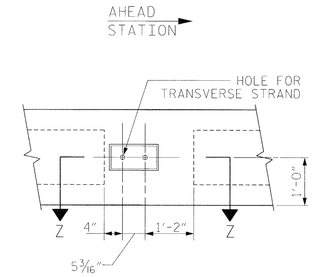

VIEW C-C
SEE SHEET 1 OF 5

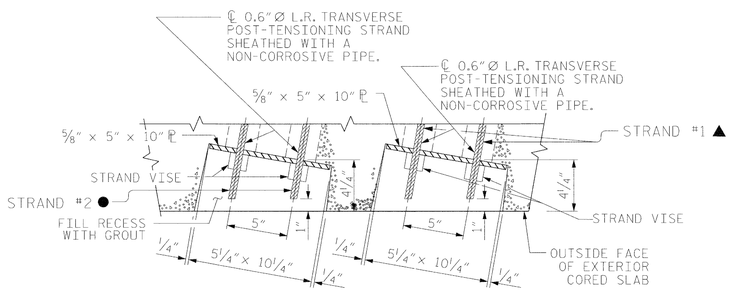

SECTION X-X
(TYPE I UNIT)

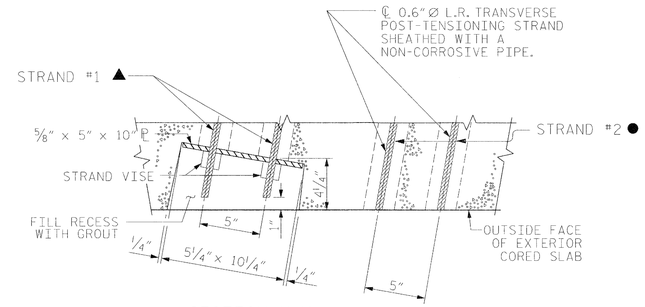

SECTION Y-Y
(TYPE III UNIT)

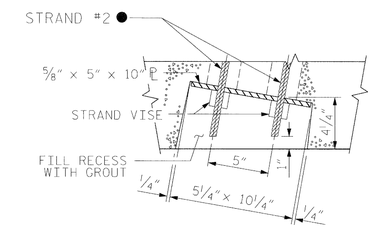

SECTION Z-Z
(TYPE V UNIT)

▲ STRANDS #1 GO THROUGH 5 CORED SLAB UNITS (TO BE TENSIONED DURING STAGE I CONSTRUCTION).

● STRANDS #2 GO THROUGH ALL 10 CORED SLAB UNITS (TO BE TENSIONED DURING STAGE II CONSTRUCTION).

GROUTED RECESS AT END OF POST-TENSIONED STRAND

PROJECT NO. 17BP.14.R.134

TRANSYLVANIA COUNTY

STATION: 12+28.00 -L-

SHEET 2 OF 5

NORTH CAROLINA PROFESSIONAL SEAL 20176 ENGINEER HARDY L. WILLIS 7/14/14

V&M
Vaughn & Melton
Consulting Engineers
Asheville, North Carolina 828-253-2796
Charlotte, North Carolina 704-357-0488
Tri-Cities, Tennessee 423-467-8410
Knoxville, Tennessee 865-546-5800
Middlesboro, Kentucky 606-248-0600
Spartanburg, South Carolina 864-574-4775

Copyright © 2006 Vaughn & Melton, Inc. All Rights Reserved

STATE OF NORTH CAROLINA
DEPARTMENT OF TRANSPORTATION
RALEIGH

3'-0" X 2'-0"
PRESTRESSED CONCRETE
CORED SLAB UNIT

DWN. BY: AW	DATE: 01/2014	
CHKD. BY: HLW	DATE: 01/2014	
DES. EGR. OF RECORD: RTS	DATE: 01/2014	

REVISIONS						
NO.	BY:	DATE:	NO.	BY:	DATE:	
1			3			
2			4			

SHEET NO. S-7
TOTAL SHEETS 23

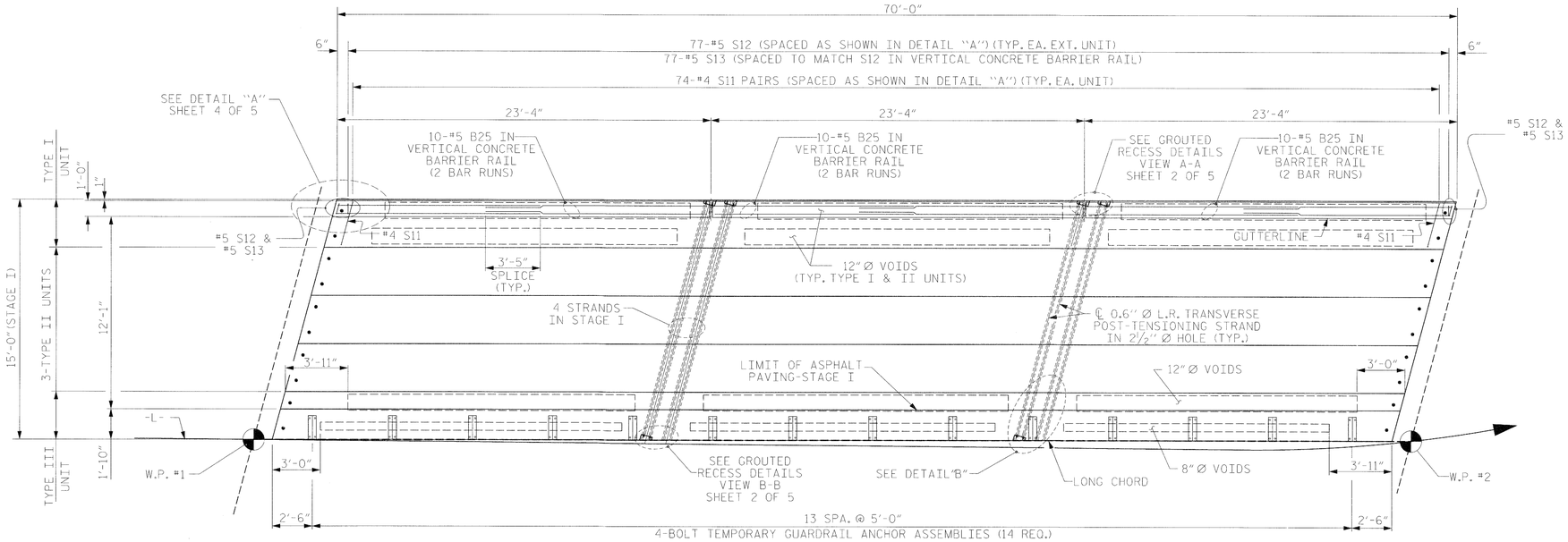

PLAN OF UNIT
(STAGE I)

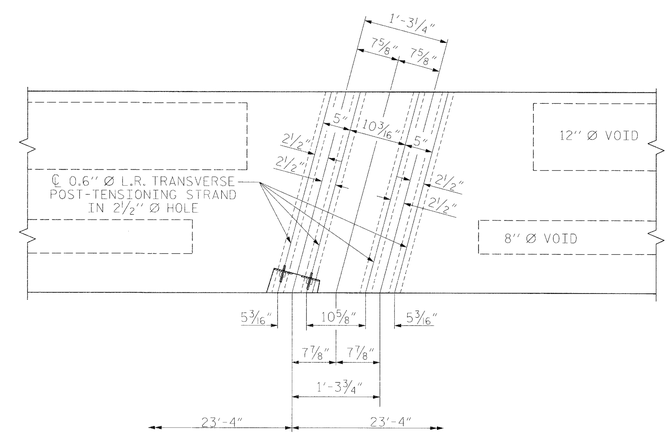

DETAIL "B"

#4 S11 BARS MAY BE SHIFTED AS NECESSARY TO MAINTAIN 1" CLEAR TO GROUTED RECESS AND 2½" Ø TRANSVERSE POST-TENSIONING STRAND HOLES

PROJECT NO. 17BP.14.R.134

TRANSYLVANIA COUNTY

STATION: 12+28.00 -L-

SHEET 3 OF 5

STATE OF NORTH CAROLINA
DEPARTMENT OF TRANSPORTATION
RALEIGH

PLAN OF 70' UNIT 27'-10" CLEAR ROADWAY 105° SKEW (STAGE I)

NORTH CAROLINA PROFESSIONAL SEAL 20777 ENGINEER HARDY L. WILLIS
7/14/14

V&M
Vaughn & Melton
Consulting Engineers
Asheville, North Carolina 828-253-2796
Charlotte, North Carolina 704-357-0488
Tri-Cities, Tennessee 423-467-8401
Knoxville, Tennessee 865-546-5800
Middlesboro, Kentucky 606-248-6600
Spartanburg, South Carolina 864-574-4775

Copyright © 2006 Vaughn & Melton, Inc. All Rights Reserved

DWN. BY: AW DATE: 01/2014
CHKD. BY: HLW DATE: 01/2014
DES. EGR. OF RECORD: RTS DATE: 01/2014

REVISIONS						
NO.	BY:	DATE:	NO.	BY:	DATE:	
1			3			
2			4			

SHEET NO. S-8
TOTAL SHEETS 23

$$$$$$SYSTIME$$$$$
$$$$$$$$$$$$$$$$$$$$$$$$DGN$$$$$$$$$$$$$$$$$$$$$$$$
$$$$USERNAME$$$$

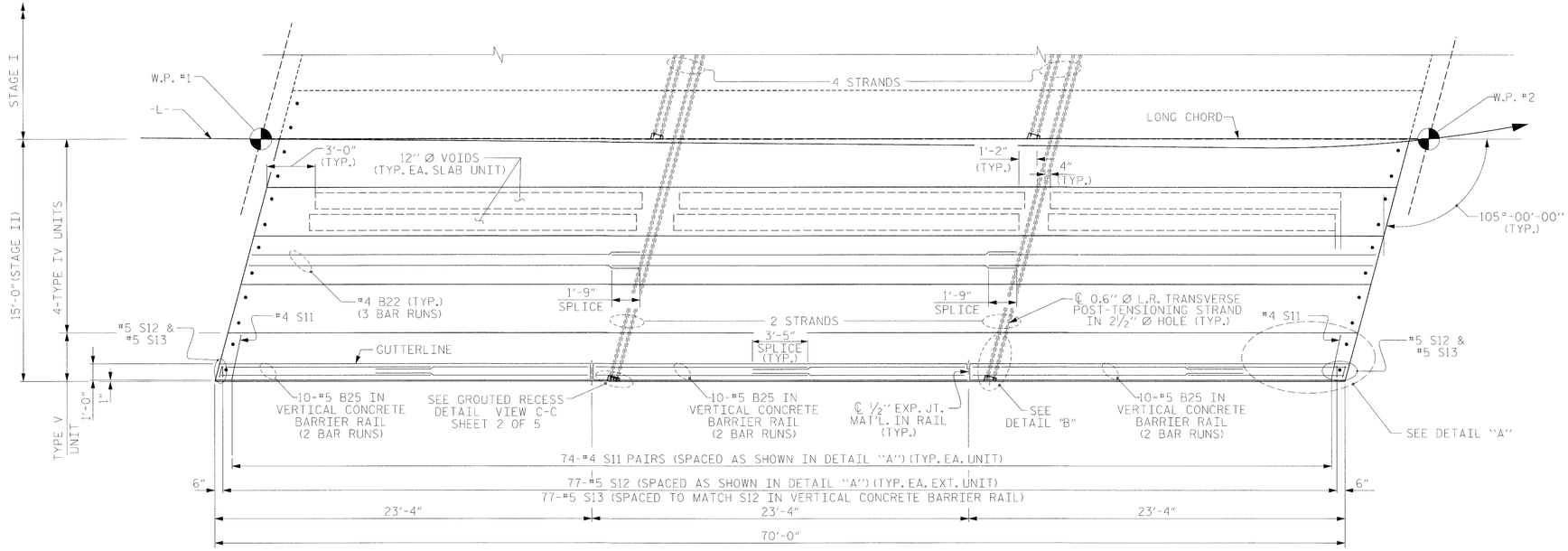

PLAN OF UNIT

(STAGE II)

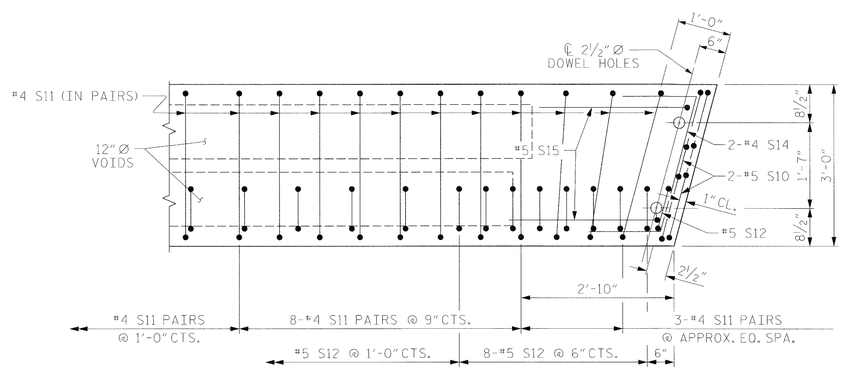

DETAIL "A"

NOTE: EXTERIOR UNIT SHOWN - INTERIOR UNIT SIMILAR EXCEPT OMIT #5 S12 BARS.

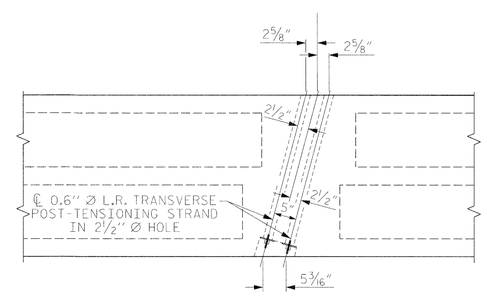

DETAIL "B"

#4 S11 BARS MAY BE SHIFTED AS NECESSARY TO MAINTAIN 1" CLEAR TO GROUTED RECESS AND 2½" Ø TRANSVERSE POST-TENSIONING STRAND HOLES

NORTH CAROLINA PROFESSIONAL SEAL 20777 ENGINEER HARDY L. WILLIS 3/14/14

PROJECT NO. 17BP.14.R.134

TRANSYLVANIA COUNTY

STATION: 12+28.00 -L-

SHEET 4 OF 5

STATE OF NORTH CAROLINA
DEPARTMENT OF TRANSPORTATION
RALEIGH

PLAN OF 70' UNIT 27'-10" CLEAR ROADWAY 105° SKEW (STAGE II)

V&M Vaughn & Melton Consulting Engineers
Asheville, North Carolina 828-253-2796
Charlotte, North Carolina 704-357-0488
Tri-Cities, Tennessee 423-467-8401
Knoxville, Tennessee 865-546-5800
Middlesboro, Kentucky 606-248-6600
Spartanburg, South Carolina 864-574-4775

Copyright © 2006 Vaughn & Melton, Inc. All Rights Reserved

DWN. BY: AW DATE: 01/2014
CHKD. BY: HLW DATE: 01/2014
DES. EGR. OF RECORD: RTS DATE: 01/2014

REVISIONS							
NO.	BY:	DATE:	NO.	BY:	DATE:		
1			3				
2			4				

SHEET NO. S-9
TOTAL SHEETS 23

$$$$$$SYSTIME$$$$$
$$$$$$$$$$$$$$$$$$$$$$DGN$$$$$$$$$$$$$$$$$$$$$$
$$$$USERNAME$$$$

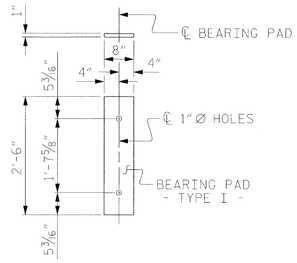

FIXED END
(TYPE I - 20 REQ'D)

ELASTOMERIC BEARING DETAILS

ELASTOMER IN ALL BEARINGS SHALL BE 60 DUROMETER HARDNESS.

GUTTERLINE ASPHALT THICKNESS & RAIL HEIGHT		
	ASPHALT OVERLAY THICKNESS @ MID-SPAN	RAIL HEIGHT @ MID-SPAN
70' UNITS	1 3/4"	3'-8"

DEAD LOAD DEFLECTION AND CAMBER	
	3'-0" x 2'-0"
70' CORED SLAB UNIT	0.6" Ø L.R. STRAND
CAMBER (SLAB ALONE IN PLACE)	4 5/16" ↑
DEFLECTION DUE TO SUPERIMPOSED DEAD LOAD**	13/16" ↓
FINAL CAMBER	3 1/2" ↑

** INCLUDES FUTURE WEARING SURFACE

CORED SLABS REQUIRED			
	NUMBER	LENGTH	TOTAL LENGTH
70' UNIT			
EXTERIOR C.S.	2	70'-0"	140'-0"
INTERIOR C.S.	8	70'-0"	560'-0"
TOTAL	10		700'-0"

BAR TYPES

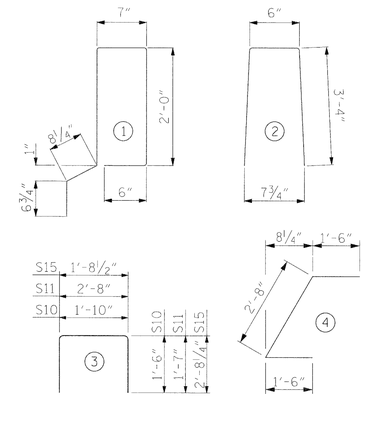

ALL BAR DIMENSIONS ARE OUT TO OUT

NOTES

ALL PRESTRESSING STRANDS SHALL BE 7-WIRE LOW RELAXATION GRADE 270 STRANDS AND SHALL CONFORM TO AASHTO M203 EXCEPT FOR SAMPLING REQUIREMENTS WHICH SHALL BE IN ACCORDANCE WITH THE STANDARD SPECIFICATIONS.

ALL REINFORCING STEEL CAST WITH THE CORED SLAB SECTIONS SHALL BE GRADE 60 AND SHALL BE INCLUDED IN THE UNIT PRICE BID FOR PRESTRESSED CONCRETE CORED SLABS.

RECESSES FOR TRANSVERSE STRANDS SHALL BE GROUTED AFTER THE TENSIONING OF THE STRANDS.

THE 2 1/2" Ø DOWEL HOLES AT FIXED ENDS OF SLAB SECTIONS SHALL BE FILLED WITH NON-SHRINK GROUT.

THE BACKER RODS SHALL CONFORM TO THE REQUIREMENTS OF TYPE M BOND BREAKER. SEE SECTION 1028 OF THE STANDARD SPECIFICATIONS.

WHEN CORED SLABS ARE CAST, AN INTERNAL HOLD-DOWN SYSTEM SHALL BE EMPLOYED TO PREVENT VOIDS FROM RISING OR MOVING SIDEWAYS. AT LEAST SIX WEEKS PRIOR TO CASTING CORED SLABS, THE CONTRACTOR SHALL SUBMIT TO THE ENGINEER FOR REVIEW AND COMMENT, DETAILED DRAWINGS OF THE PROPOSED HOLD-DOWN SYSTEM. IN ADDITION TO STRUCTURAL DETAILS, LOCATION AND SPACING OF THE HOLD-DOWNS SHALL BE INDICATED.

THE TRANSFER OF LOAD FROM THE ANCHORAGES TO THE CORED SLAB UNIT SHALL BE DONE WHEN THE CONCRETE HAS REACHED A COMPRESSIVE STRENGTH OF NOT LESS THAN THE REQUIRED STRENGTH SHOWN IN THE "CONCRETE RELEASE STRENGTH" TABLE.

ALL REINFORCING STEEL IN VERTICAL CONCRETE BARRIER RAILS SHALL BE EPOXY COATED.

PRESTRESSING STRANDS SHALL BE CUT FLUSH WITH THE CORED SLAB UNIT ENDS.

APPLY EPOXY PROTECTIVE COATING TO CORED SLAB UNIT ENDS.

GROOVED CONTRACTION JOINTS, 1/2" IN DEPTH, SHALL BE TOOLED IN ALL EXPOSED FACES OF THE BARRIER RAIL AND IN ACCORDANCE WITH ARTICLE 825-10(B) OF THE STANDARD SPECIFICATIONS. A CONTRACTION JOINT SHALL BE LOCATED AT EACH THIRD POINT BETWEEN BARRIER RAIL EXPANSION JOINTS. ONLY ONE CONTRACTION JOINT IS REQUIRED AT MIDPOINT OF BARRIER RAIL SEGMENTS LESS THAN 20 FEET IN LENGTH AND NO CONTRACTION JOINTS ARE REQUIRED FOR THOSE SEGMENTS LESS THAN 10 FEET IN LENGTH.

TRANSVERSE POST TENSIONING OF THE CORED SLAB UNITS SHALL BE DONE IN ACCORDANCE WITH THE STANDARD SPECIFICATIONS.

MAINTAIN A SYMMETRIC TENSION FORCE BETWEEN EACH PAIR OF TRANSVERSE POST TENSIONING STRANDS IN THE DIAPHRAGM.

THE #4 S11 STIRRUPS MAY BE SHIFTED AS NECESSARY TO MAINTAIN 1" CLEAR TO THE GROUTED RECESS.

FOR GROUT FOR STRUCTURES, SEE SPECIAL PROVISIONS.

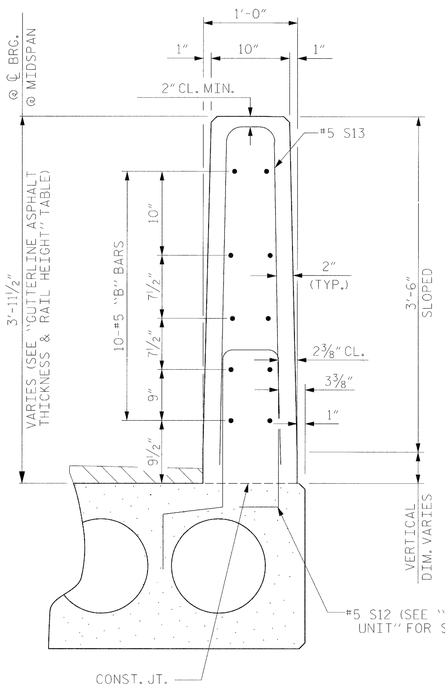

SECTION THRU RAIL

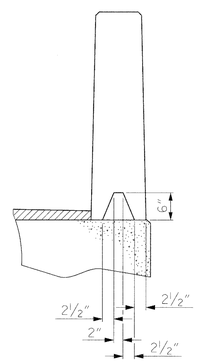

SECTION S-S
AT DAM IN OPEN JOINT
(THIS IS TO BE USED ONLY WHEN SLIP FORM IS USED)

℄ 1/2" EXP. JT. MAT'L HELD IN PLACE WITH GALVANIZED NAILS.
(NOTE: OMIT EXP. JT. MAT'L. WHEN SLIP FORM IS USED)

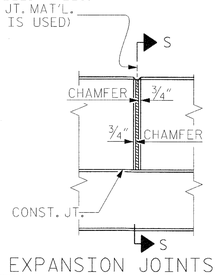

ELEVATION AT EXPANSION JOINTS

VERTICAL CONCRETE BARRIER RAIL DETAILS

BILL OF MATERIAL FOR ONE 70' CORED SLAB UNIT							
				EXTERIOR UNIT		INTERIOR UNIT	
BAR	NUMBER	SIZE	TYPE	LENGTH	WEIGHT	LENGTH	WEIGHT
B22	6	#4	STR	24'-6"	98	24'-6"	98
S10	8	#5	3	4'-10"	40	4'-10"	40
S11	148	#4	3	5'-10"	577	5'-10"	577
*S12	79	#5	1	6'-4"	522		
S14	4	#4	4	5'-8"	15	5'-8"	15
S15	4	#5	3	7'-1"	30	7'-1"	30
REINFORCING STEEL			LBS.		760		760
*EPOXY COATED REINFORCING STEEL			LBS.		522		
9000 P.S.I. CONCRETE			CU. YDS.		12.0		12.0
0.6" Ø L.R. STRANDS			No.		28		28

BILL OF MATERIAL FOR VERTICAL CONCRETE BARRIER RAIL						
BAR	BARS PER PAIR OF EXTERIOR UNITS	TOTAL NO.	SIZE	TYPE	LENGTH	WEIGHT
	70' UNIT					
*B25	120		#5	STR	13'-8"	1711
*S13	158		#5	2	7'-2"	1181
*EPOXY COATED REINFORCING STEEL				LBS.		2892
CLASS AA CONCRETE				CU.YDS.		18.9
TOTAL VERTICAL CONCRETE BARRIER RAIL				LN. FT.		140.26

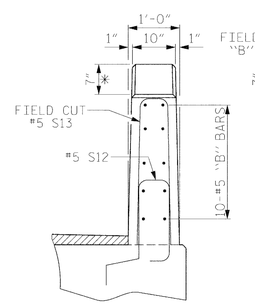

END VIEW

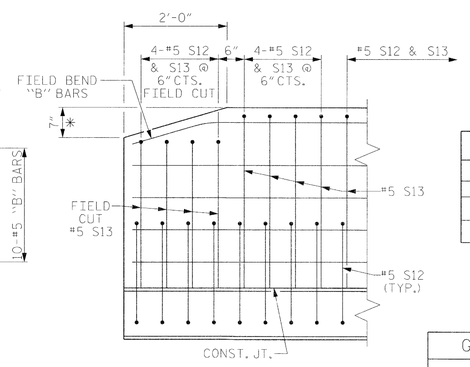

SIDE VIEW

END OF RAIL DETAILS

* NOTES: OMIT TAPER ON LEFT SIDE AT END BENT 2
SEE BRIDGE APPROACH SLAB SHEETS FOR DETAILS

CONCRETE RELEASE STRENGTH	
UNIT	PSI
70' UNITS	6000

GRADE 270 STRANDS	
	0.6" Ø L.R.
AREA (SQUARE INCHES)	0.217
ULTIMATE STRENGTH (LBS. PER STRAND)	58,600
APPLIED PRESTRESS (LBS. PER STRAND)	43,950

NORTH CAROLINA PROFESSIONAL ENGINEER SEAL 20777 HARDY L. WILLIS
7/14/14

PROJECT NO. 17BP.14.R.134
TRANSYLVANIA COUNTY
STATION: 12+28.00 -L-

SHEET 5 OF 5

STATE OF NORTH CAROLINA
DEPARTMENT OF TRANSPORTATION
RALEIGH

STANDARD
3'-0" X 2'-0"
PRESTRESSED CONCRETE
CORED SLAB UNIT

ASSEMBLED BY :	DPP	DATE : 9/2013
CHECKED BY :	RTS	DATE : 9/2013
DRAWN BY : MAA	6/10	REV. 12/11 MAA/AAC
CHECKED BY : MKT	7/10	

REVISIONS						SHEET NO.
NO.	BY:	DATE:	NO.	BY:	DATE:	S-10
1			3			TOTAL SHEETS
2			4			23

$$$$$$SYSTIME$$$$$
$$$$$$$$$$$$$$$$$$$$$$DGN$$$$$$$$$$$$$$$$$$$$$
$$$$USERNAME$$$$

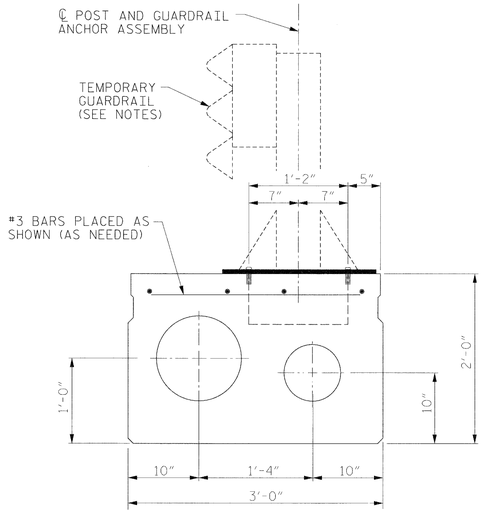

SECTION OF ANCHOR ASSEMBLY LOCATION

(TYPE III UNIT - STAGE I)
THE #3 BARS ARE INCIDENTAL AND THEIR COST SHALL
BE INCLUDED IN THE PRICE BID FOR THE PRESTRESSED CONCRETE CORED SLABS.

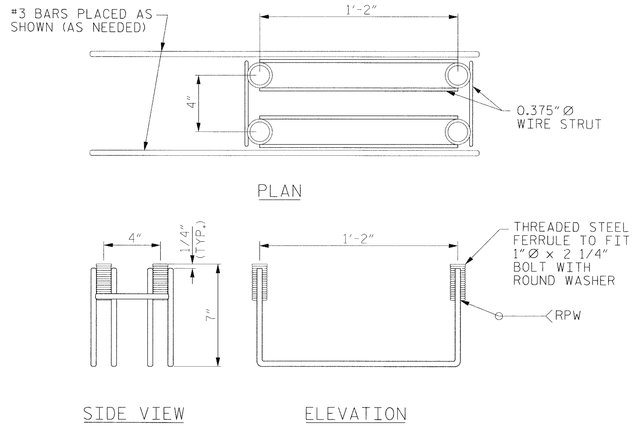

MINIMUM LENGTH OF THREADS IN INSERT (FERRULE): 2 1/2"

TEMPORARY GUARDRAIL ANCHOR ASSEMBLY

(14 ASSEMBLIES REQUIRED IN THE TYPE III CORED SLAB UNITS)
(6 ASSEMBLIES REQUIRED IN THE APPROACH SLABS)

NOTES

THE TEMPORARY GUARDRAIL ANCHOR ASSEMBLY SHALL CONSIST OF THE FOLLOWING COMPONENTS:

A. FERRULES SHALL BE MADE FROM STEEL MEETING THE REQUIREMENTS OF AASHTO M169, GRADE 12L14 AND SHALL HAVE A MINIMUM LENGTH OF THREADS OF 2½".

B. 4 - 1"Ø X 2¼" BOLTS WITH WASHERS. BOLTS SHALL CONFORM TO THE REQUIREMENTS OF ASTM A307. BOLTS AND WASHERS SHALL BE GALVANIZED. (AT THE CONTRACTOR'S OPTION STAINLESS STEEL BOLTS AND WASHERS MAY BE USED AS AN ALTERNATE FOR THE 1"Ø X 2¼" GALVANIZED BOLTS AND WASHERS. THEY SHALL CONFORM TO OR EXCEED THE MECHANICAL REQUIREMENTS OF ASTM A307. THE USE OF THIS ALTERNATE SHALL BE APPROVED BY THE ENGINEER.)

C. WIRE STRUTS SHOWN IN THE TEMPORARY GUARDRAIL ANCHOR ASSEMBLY DETAIL ARE THE MINIMUM ALLOWABLE SIZE AND SHALL HAVE A MINIMUM TENSILE STRENGTH OF 100,000 PSI.

TEMPORARY GUARDRAIL ANCHOR ASSEMBLY WITH BOLTS SHALL BE ASSEMBLED IN THE SHOP. BOLT THREADS MAY BE RECUT AS NECESSARY TO ENSURE FIT.

THE COST OF THE TEMPORARY GUARDRAIL ANCHOR ASSEMBLY COMPLETE IN PLACE SHALL BE INCLUDED, AS APPLICABLE, IN THE UNIT CONTRACT PRICE BID FOR 3'-0" X 2'-0" PRESTRESSED CONCRETE CORED SLAB OR LUMP SUM PRICE BID FOR APPROACH SLABS.

FERRULES SHALL BE PLUGGED DURING CASTING OF THE CORED SLAB UNITS OR POURING OF APPROACH SLAB AS RECOMMENDED BY THE MANUFACTURER.

AT THE CONTRACTOR'S OPTION, FERRULES WITH OPEN OR CLOSED ENDS MAY BE USED.

PAYMENT FOR TEMPORARY GUARDRAIL, POST, AND POST BASE PLATES IS INCLUDED IN ROADWAY PAY ITEMS.

CORED SLAB REINFORCING STEEL MAY BE SHIFTED AS NECESSARY TO CLEAR GUARDRAIL ANCHOR ASSEMBLY. CARE SHOULD BE TAKEN TO KEEP THE SHIFTING OF THE REINFORCING STEEL TO A MIMIMUM.

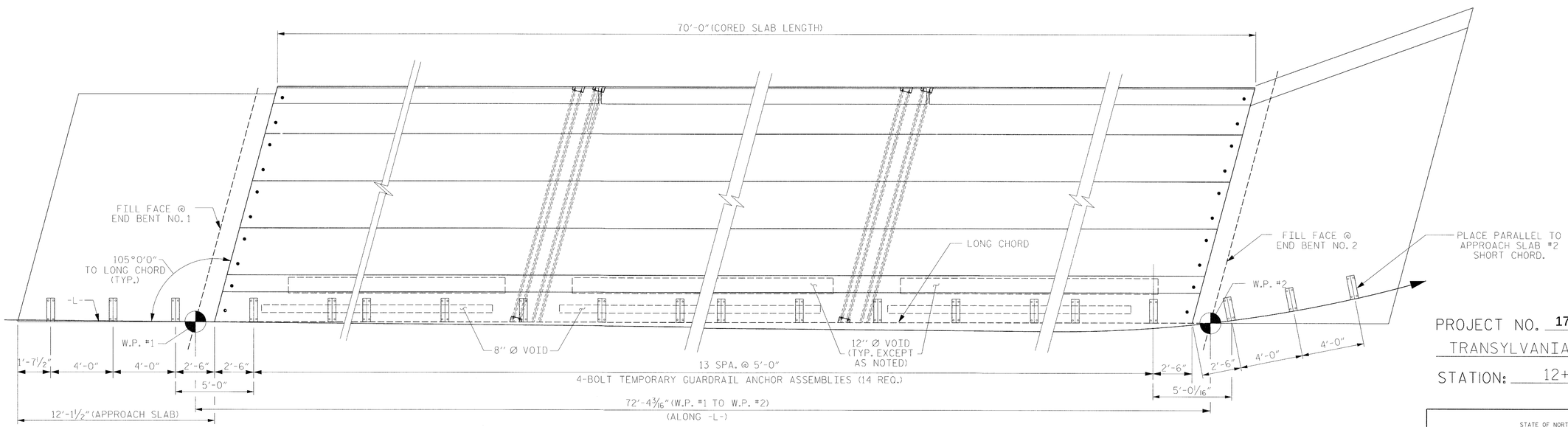

RAIL POST SPACING FOR TEMPORARY GUARDRAIL - STAGE I

PROJECT NO. 17BP.14.R.134
TRANSYLVANIA COUNTY
STATION: 12+28.00 -L-

STATE OF NORTH CAROLINA
DEPARTMENT OF TRANSPORTATION
RALEIGH

ANCHORAGE DETAILS FOR TEMPORARY GUARDRAIL ANCHOR ASSEMBLY FOR TYPE III CORED SLAB UNIT - STAGE I

NORTH CAROLINA PROFESSIONAL SEAL 22457 ENGINEER HARDY L. WILLIS
7/14/14

REVISIONS						SHEET NO.
NO.	BY:	DATE:	NO.	BY:	DATE:	S-11
1			3			TOTAL SHEETS
2			4			23

ASSEMBLED BY :	AW	DATE : 01/2014	
CHECKED BY :	HLW	DATE : 01/2014	
DRAWN BY : DGE	5/09	REV. 12/11	MAA/AAC
CHECKED BY : BCH	6/09		

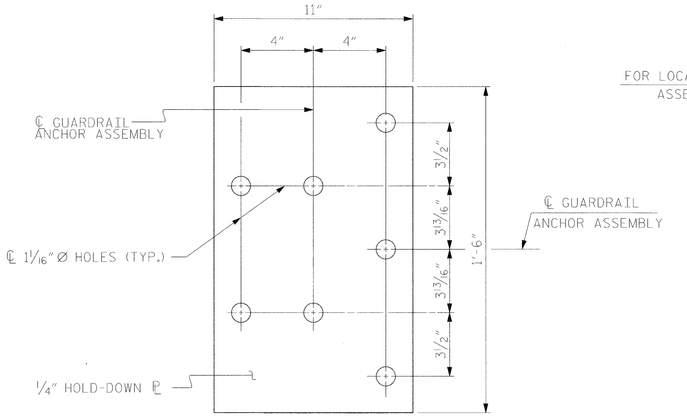

PLAN

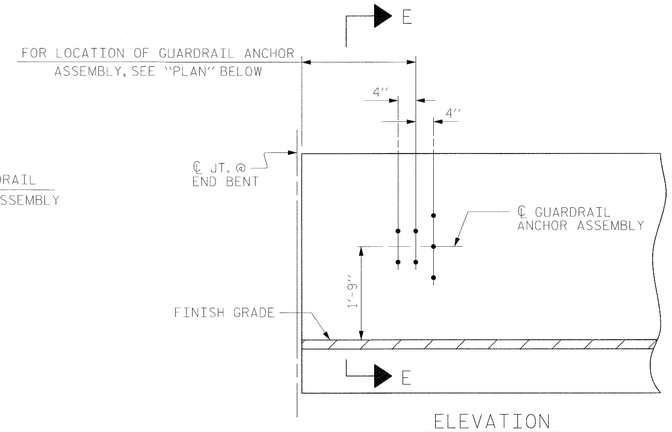

ELEVATION

NOTES

THE GUARDRAIL ANCHOR ASSEMBLY SHALL CONSIST OF A 1/4" HOLD DOWN PLATE AND 7 - 7/8" Ø BOLTS WITH NUTS AND WASHERS.

THE HOLD-DOWN PLATE SHALL CONFORM TO AASHTO M270 GRADE 36. AFTER FABRICATION, THE HOLD-DOWN PLATE SHALL BE HOT-DIP GALVANIZED IN ACCORDANCE WITH AASHTO M111.

BOLTS SHALL CONFORM TO THE REQUIREMENTS OF ASTM A307 AND NUTS SHALL CONFORM TO THE REQUIREMENTS OF AASHTO M291. BOLTS, NUTS AND WASHERS SHALL BE GALVANIZED. (AT THE CONTRACTOR'S OPTION, STAINLESS STEEL BOLTS, NUTS AND WASHERS MAY BE USED AS AN ALTERNATE FOR THE 7/8" Ø GALVANIZED BOLTS, NUTS AND WASHERS. THEY SHALL CONFORM TO OR EXCEED THE MECHANICAL REQUIREMENTS OF ASTM A307. THE USE OF THIS ALTERNATE SHALL BE APPROVED BY THE ENGINEER.)

THE GUARDRAIL ANCHOR ASSEMBLY IS REQUIRED AT ALL POINTS WHERE APPROACH GUARDRAIL IS TO BE ATTACHED TO THE END OF BARRIER RAIL. FOR POINTS OF ATTACHMENT, SEE SKETCH.

AFTER INSTALLATION, THE EXPOSED THREAD OF THE BOLT SHALL BE BURRED WITH A SHARP POINTED TOOL.

THE COST OF THE GUARDRAIL ANCHOR ASSEMBLY SHALL BE INCLUDED IN THE UNIT CONTRACT PRICE BID FOR VERTICAL CONCRETE BARRIER RAIL.

THE VERTICAL REINFORCING BARS MAY BE SHIFTED SLIGHTLY IN THE VERTICAL CONCRETE BARRIER RAIL TO CLEAR ASSEMBLY BOLTS.

THE 1 1/4" Ø HOLES SHALL BE FORMED OR DRILLED WITH A CORE BIT. IMPACT TOOLS WILL NOT BE PERMITTED. ANY CONCRETE DAMAGED BY THIS WORK SHALL BE REPAIRED TO THE SATISFACTION OF THE ENGINEER.

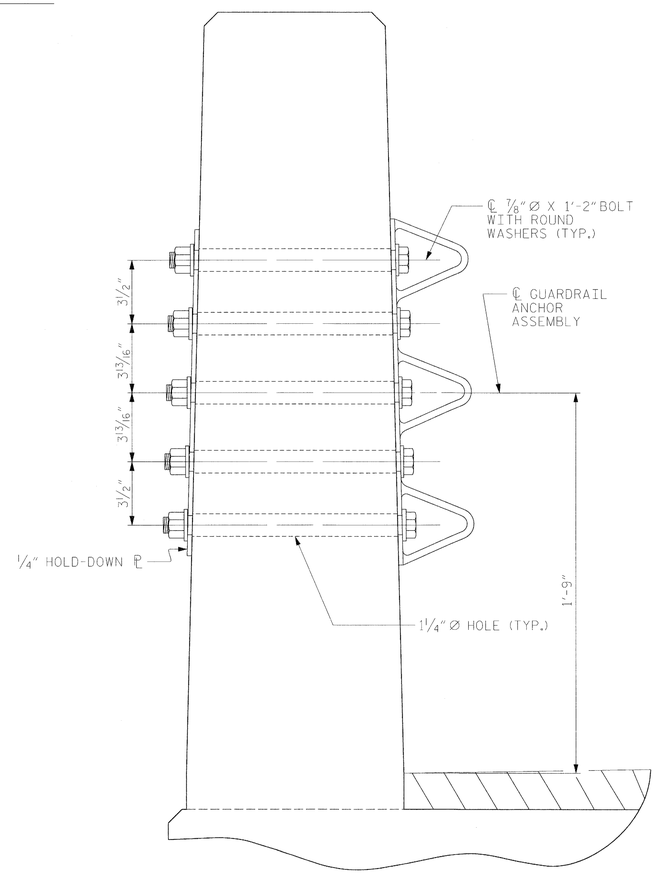

SECTION E-E

GUARDRAIL ANCHOR ASSEMBLY DETAILS

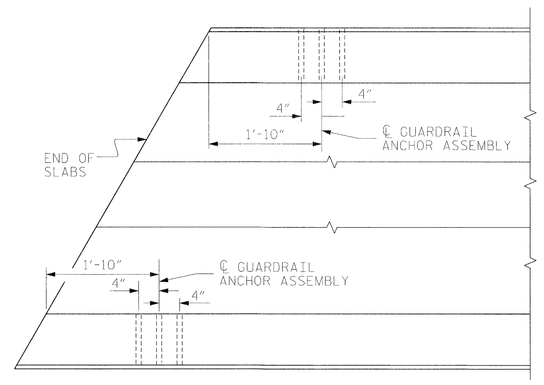

PLAN

LOCATION OF ANCHORS FOR GUARDRAIL

END BENT #1 SHOWN, END BENT #2 SIMILAR.

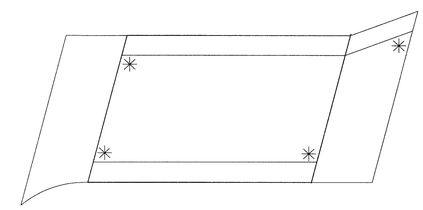

SKETCH SHOWING POINTS OF ATTACHMENT

✳ DENOTES GUARDRAIL ANCHOR ASSEMBLY

PROJECT NO. 17BP.14.R.134

TRANSYLVANIA COUNTY

STATION: 12+28.00 -L-

STATE OF NORTH CAROLINA
DEPARTMENT OF TRANSPORTATION
RALEIGH

STANDARD
GUARDRAIL ANCHORAGE FOR VERTICAL CONCRETE BARRIER RAIL

NORTH CAROLINA PROFESSIONAL SEAL ENGINEER HARDY L. WILLIS 7/14/14

REVISIONS						SHEET NO.
NO.	BY:	DATE:	NO.	BY:	DATE:	S-12
1			3			TOTAL SHEETS
2			4			23

ASSEMBLED BY : RWW	DATE : 1/14/14
CHECKED BY : HLW	DATE : 1/27/14
DRAWN BY : MAA 5/10	ADDED 5/6/10
CHECKED BY : GM 5/10	REV. 10/1/11 MAA/GM
	REV. 12/5/11 MAA/GM

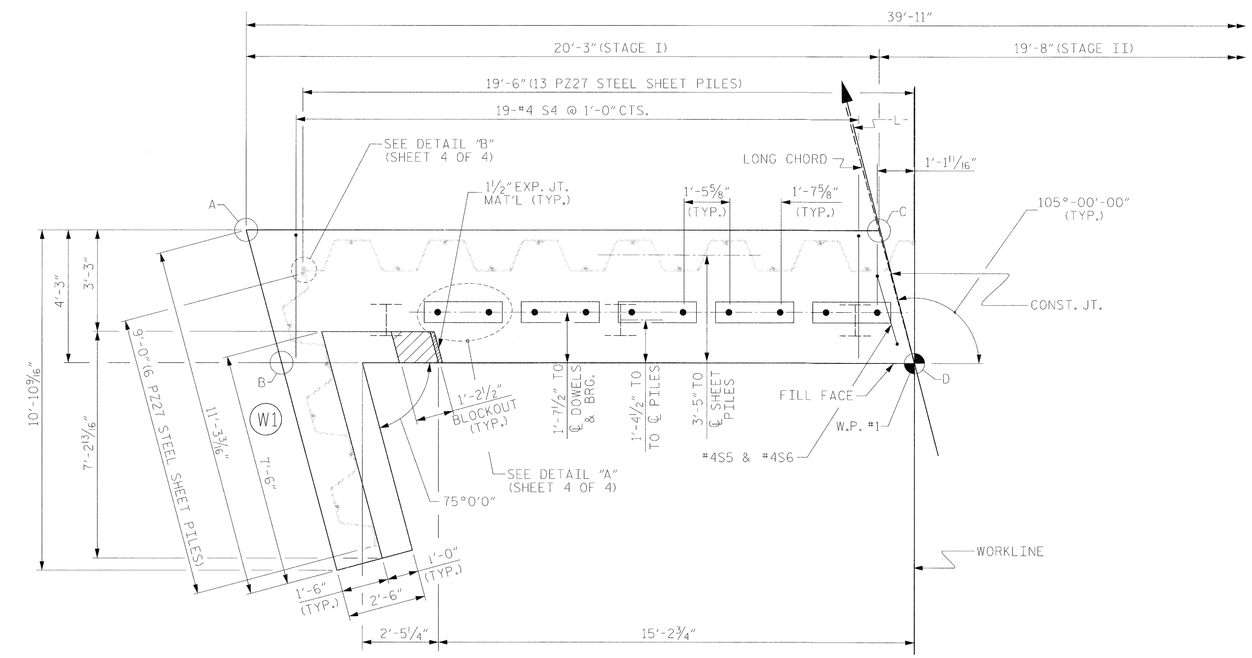

PLAN

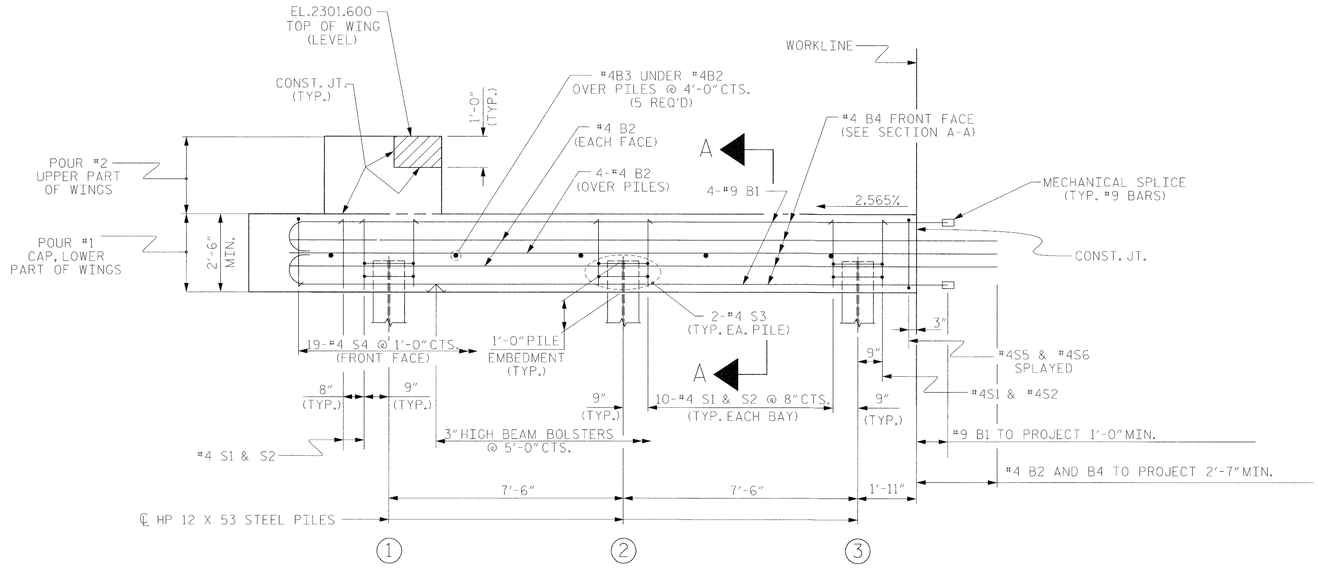

ELEVATION

WINGS NOT SHOWN FOR CLARITY.
FOR SECTION A-A, SEE SHEET 4 OF 4.

NOTES

STIRRUPS IN CAP MAY BE SHIFTED AS NECESSARY TO CLEAR DOWELS.

THE CONCRETE IN THE SHADED AREA OF THE WING SHALL BE POURED AFTER THE VERTICAL CONCRETE BARRIER RAIL IS CAST IF SLIP FORMING IS USED.

FOR PILE SPLICE DETAILS, SEE SHEET 4 OF 4.

FOR WING DETAILS, SEE SHEET 3 OF 4.

ELEVATIONS OF NOTED POINTS		
	TOP OF CAP	BOTTOM OF CAP
POINT A	2298.881	2296.381
POINT B	2298.850	2296.350
POINT C	2299.400	2296.900
POINT D	2299.369	2296.869

TOP OF PILE ELEVATIONS	
1	2297.458
2	2297.651
3	2297.843

NORTH CAROLINA PROFESSIONAL SEAL 029 ENGINEER HARDY L. WILLIS
7/14/14

PROJECT NO. 17BP.14.R.134
TRANSYLVANIA COUNTY
STATION: 12+28.00 -L-

SHEET 1 OF 4

V&M Vaughn & Melton Consulting Engineers
Asheville, North Carolina 828-253-2796
Charlotte, North Carolina 704-357-0488
Tri-Cities, Tennessee 423-467-8401
Knoxville, Tennessee 865-546-5800
Middlesboro, Kentucky 606-248-6600
Spartanburg, South Carolina 864-574-4175
Copyright © 2006 Vaughn & Melton, Inc. All Rights Reserved

STATE OF NORTH CAROLINA
DEPARTMENT OF TRANSPORTATION
RALEIGH

SUBSTRUCTURE
END BENT No. 1
STAGE I

DWN. BY: AW DATE: 01/2014
CHKD. BY: HLW DATE: 01/2014
DES. EGR. OF RECORD: RTS DATE: 01/2014

REVISIONS						SHEET NO.
NO.	BY:	DATE:	NO.	BY:	DATE:	S-13
1			3			TOTAL SHEETS
2			4			23

$$$$$$SYSTIME$$$$$
$$$$$$$$$$$$$$$$$$$$$$DGN$$$$$$$$$$$$$$$$$$$$$$
$$$$$IISFRNAME$$$$

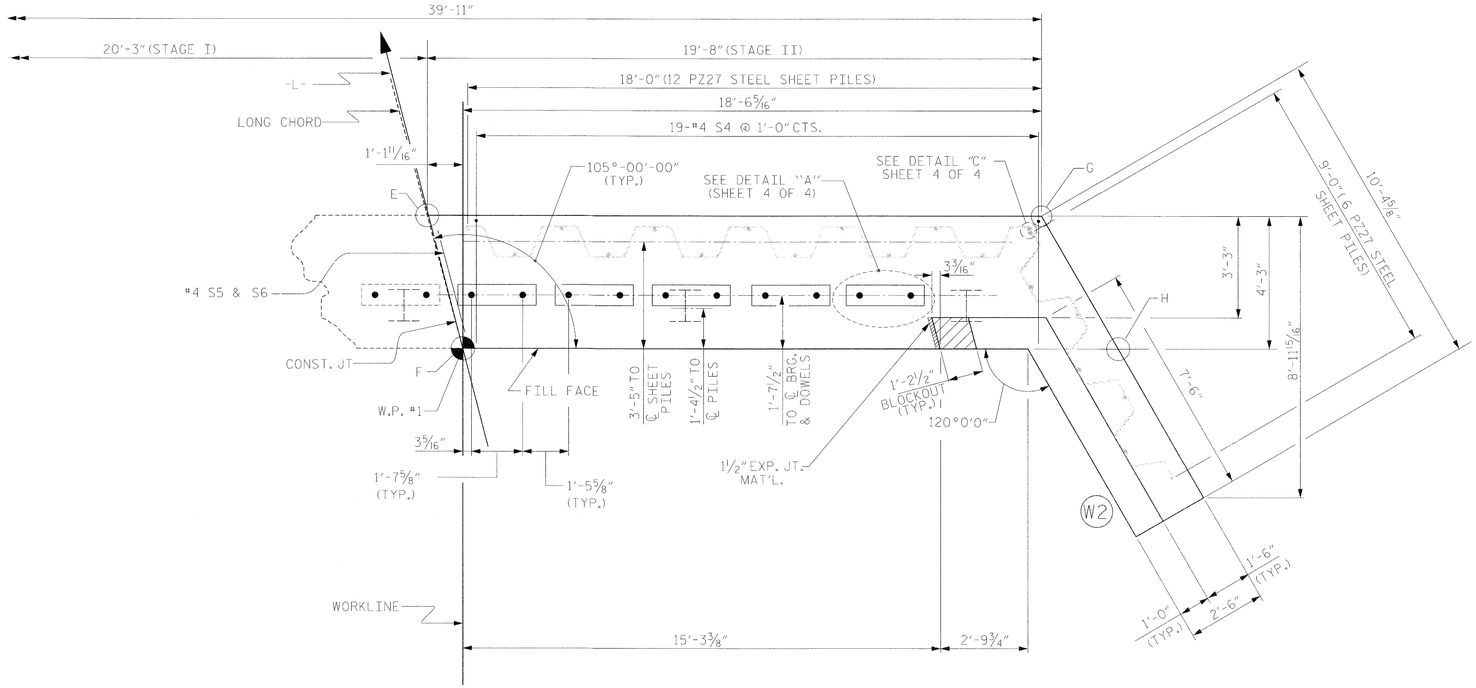

PLAN

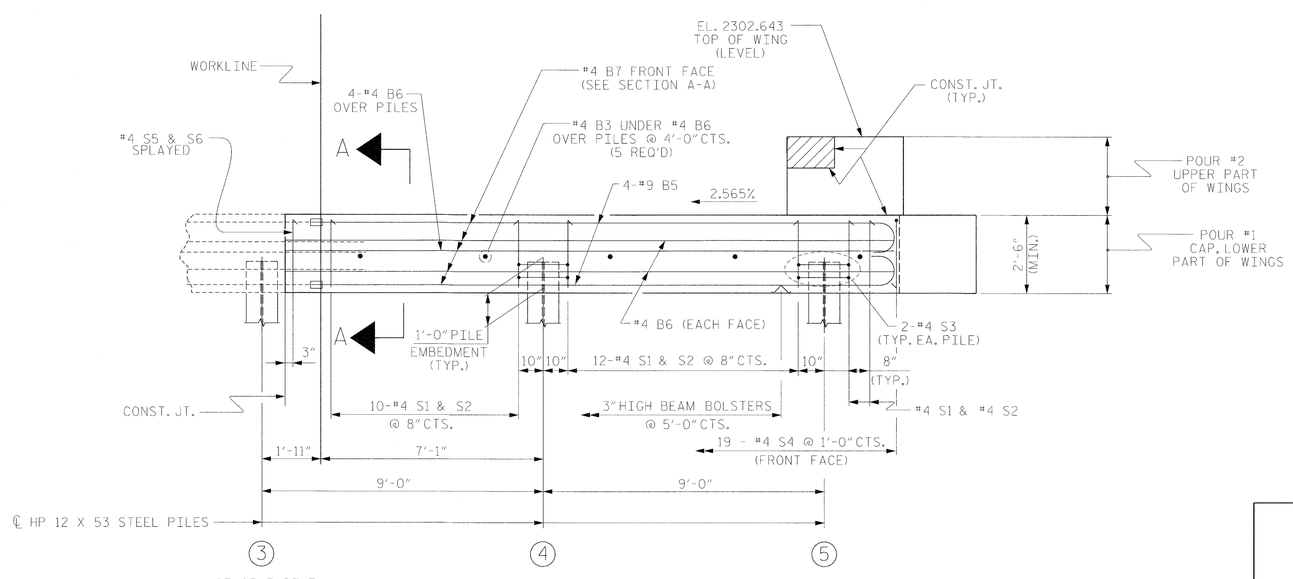

ELEVATION

WINGS NOT SHOWN FOR CLARITY.
FOR SECTION A-A, SEE SHEET 4 OF 4.

NOTES

STIRRUPS IN CAP MAY BE SHIFTED AS NECESSARY TO CLEAR DOWELS.

THE CONCRETE IN THE SHADED AREA OF THE WING SHALL BE POURED AFTER THE VERTICAL CONCRETE BARRIER RAIL IS CAST IF SLIP FORMING IS USED.

FOR PILE SPLICE DETAILS, SEE SHEET 4 OF 4.

FOR WING DETAILS, SEE SHEET 3 OF 4.

ELEVATIONS OF NOTED POINTS		
	TOP OF CAP	BOTTOM OF CAP
POINT E	2299.400	2296.900
POINT F	2299.369	2296.869
POINT G	2299.928	2297.428
POINT H	2299.893	2297.393

TOP OF PILE ELEVATIONS	
4	2298.074
5	2298.305

NORTH CAROLINA PROFESSIONAL SEAL 20174 ENGINEER HARDY L. WILLIG 7/14/14

PROJECT NO. 17BP.14.R.134
TRANSYLVANIA COUNTY
STATION: 12+28.00 -L-

SHEET 2 OF 4

STATE OF NORTH CAROLINA
DEPARTMENT OF TRANSPORTATION
RALEIGH

SUBSTRUCTURE
END BENT No. 1
STAGE II

V&M Vaughn & Melton Consulting Engineers
Asheville, North Carolina 828 253 2796
Charlotte, North Carolina 704-357-0488
Tri-Cities, Tennessee 423-467-8401
Knoxville, Tennessee 865-546-5800
Middlesboro, Kentucky 606-248-6600
Spartanburg, South Carolina 864-574-4775
Copyright © 2006 Vaughn & Melton, Inc. All Rights Reserved

DWN. BY: AW DATE: 01/2014
CHKD. BY: HLW DATE: 01/2014
DES. EGR. OF RECORD: RTS DATE: 01/2014

REVISIONS						SHEET NO.
NO.	BY:	DATE:	NO.	BY:	DATE:	S-14
1			3			TOTAL SHEETS
2			4			23

$$$$$$SYSTIME$$$$$
$$$$$$$$$$$$$$$$$$$$DGN$$$$$$$$$$$$$$$$$$$$$$$$
$$$$USERNAME$$$$

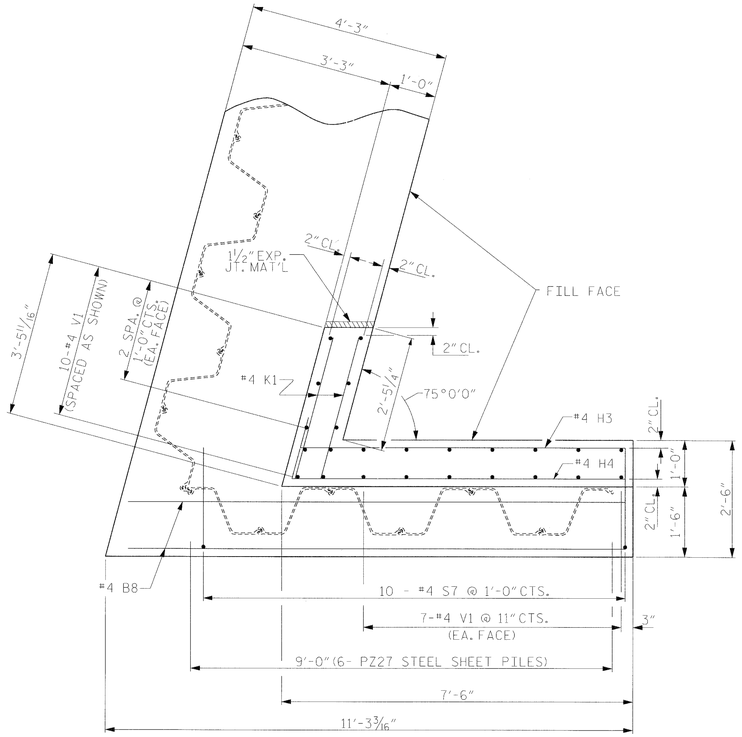

PLAN OF WING (W1)

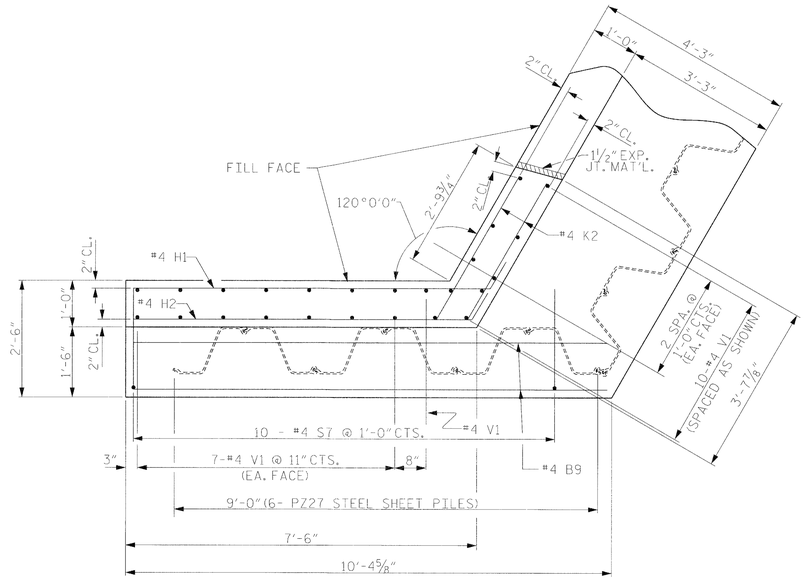

PLAN OF WING (W2)

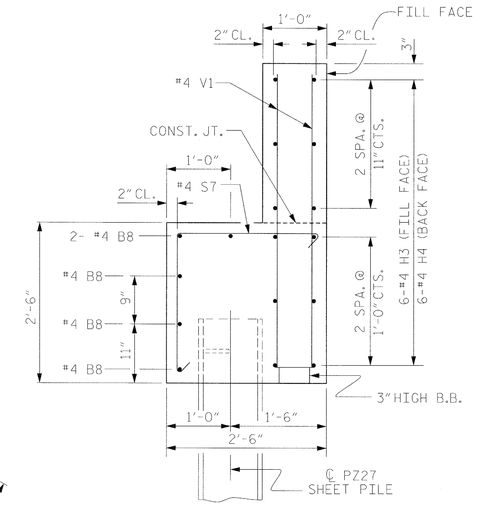

SECTION X-X

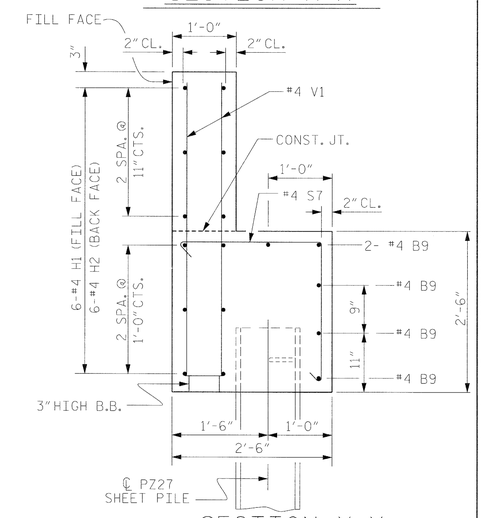

SECTION Y-Y

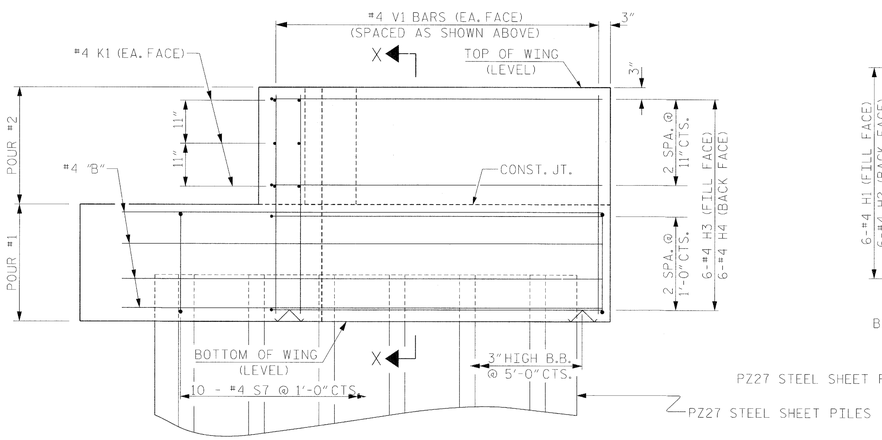

ELEVATION OF WING (W1)

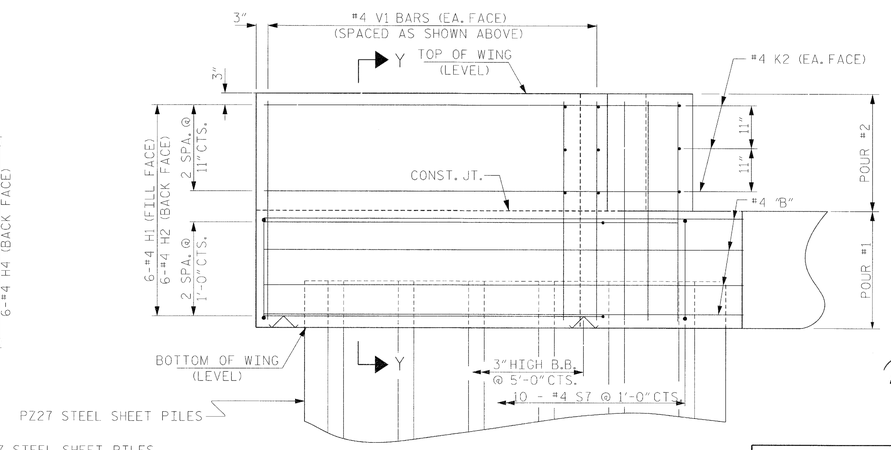

ELEVATION OF WING (W2)

WING DETAILS

NORTH CAROLINA PROFESSIONAL SEAL 027777 ENGINEER HARDY L. WILLIS
7/14/14

PROJECT NO. 17BP.14.R.134

TRANSYLVANIA COUNTY

STATION: 12+28.00 -L-

SHEET 3 OF 4

V&M
Vaughn & Melton
Consulting Engineers
Asheville, North Carolina 828 253 2796
Charlotte, North Carolina 704 357 0488
Tri-Cities, Tennessee 423 467 8401
Knoxville, Tennessee 865 546 5800
Middlesboro, Kentucky 606 248 6600
Spartanburg, South Carolina 864 574 4775

Copyright © 2006 Vaughn & Melton, Inc. All Rights Reserved

STATE OF NORTH CAROLINA
DEPARTMENT OF TRANSPORTATION
RALEIGH

SUBSTRUCTURE
END BENT NO.1
WING DETAILS

DWN. BY: AW	DATE: 01/2014	
CHKD. BY: HLW	DATE: 01/2014	
DES. EGR. OF RECORD: RTS	DATE: 01/2014	

REVISIONS								
NO.	BY:	DATE:	NO.	BY:	DATE:			
1			3					
2			4					

SHEET NO. S-15

TOTAL SHEETS 23

$$$$$$SYSTIME$$$$$
$$$$$$$$$$$$$$$$$$$$$$DGN$$$$$$$$$$$$$$$$$$$$$$$$
$$$$USERNAME$$$$

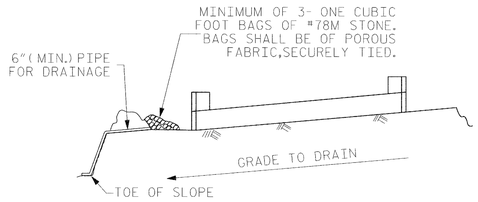

BAGGED STONE AND PIPE SHALL BE PLACED IMMEDIATELY AFTER COMPLETION OF END BENT EXCAVATION. PIPE MAY BE EITHER CONCRETE, CORRUGATED STEEL, CORRUGATED ALUMINUM ALLOY, OR CORRUGATED PLASTIC. PERFORATED PIPE WILL NOT BE ALLOWED.

BAGGED STONE SHALL REMAIN IN PLACE UNTIL THE ENGINEER DIRECTS THAT IT BE REMOVED. THE CONTRACTOR SHALL REMOVE AND DISPOSE OF SILT ACCUMULATIONS AT BAGGED STONE WHEN SO DIRECTED BY THE ENGINEER. BAGS SHALL BE REMOVED AND REPLACED WHENEVER THE ENGINEER DETERMINES THAT THEY HAVE DETERIORATED AND LOST THEIR EFFECTIVENESS.

NO SEPARATE PAYMENT WILL BE MADE FOR THIS WORK AND THE ENTIRE COST OF THIS WORK SHALL BE INCLUDED IN THE UNIT CONTRACT PRICE BID FOR THE SEVERAL PAY ITEMS.

TEMPORARY DRAINAGE AT END BENT

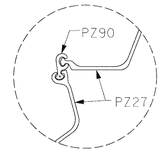

DETAIL "B"

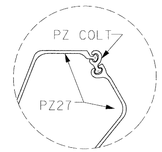

DETAIL "C"

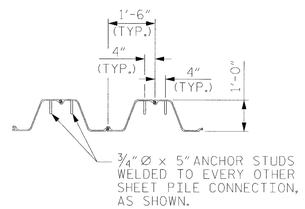

ANCHOR STUD DETAIL

SHEET PILE CONNECTION DETAILS

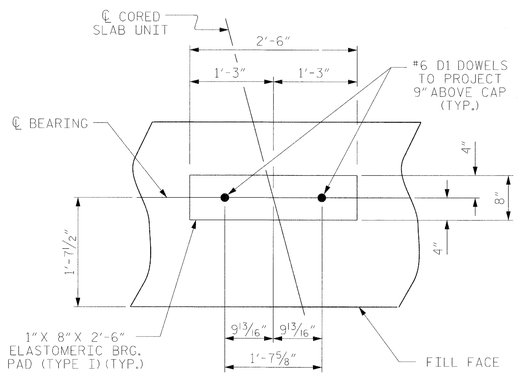

DETAIL "A"

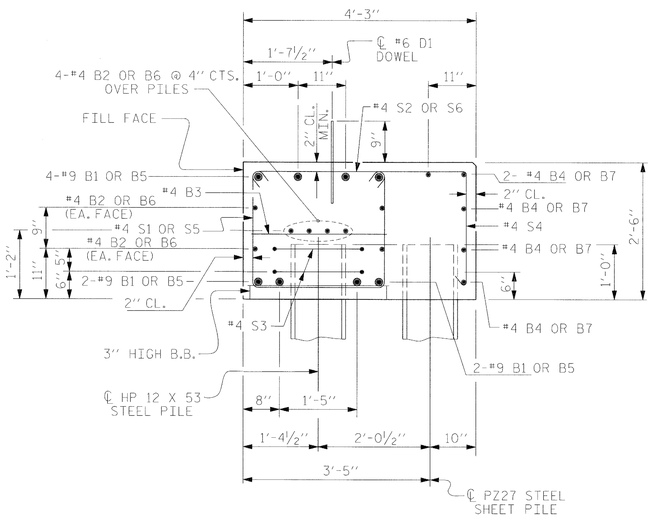

SECTION A-A

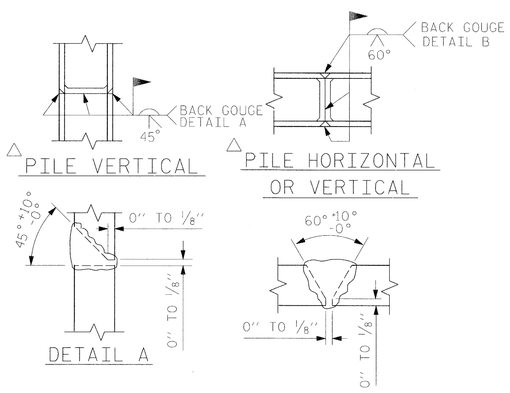

PILE SPLICE DETAILS

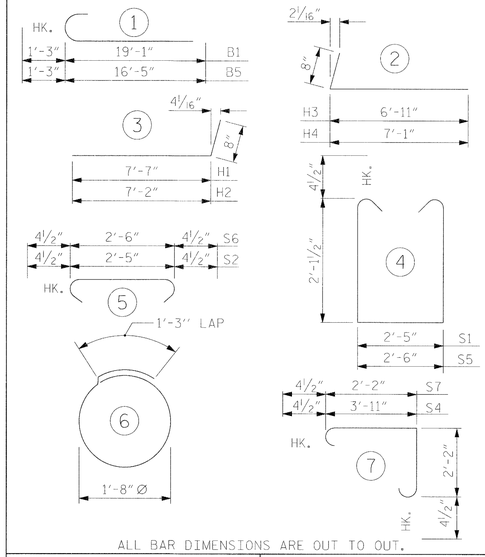

ALL BAR DIMENSIONS ARE OUT TO OUT.

END BENT No. 1	18" STEEL SHEET PILES	
HP 12 X 53 STEEL PILES	NO. PZ 27 =	37
	NO. PZ 90 =	1
	NO. PZ COLT =	1
	TOTAL =	39
NO: 5 LIN. FT.= 100	TOTAL SQ. FT. =	635

PILE EXCAVATION

IN SOIL	NOT IN SOIL
LIN. FT. = 55	LIN. FT. = 25

BILL OF MATERIAL FOR END BENT NO. 1

STAGE I						STAGE II					
BAR	NO.	SIZE	TYPE	LENGTH	WEIGHT	BAR	NO.	SIZE	TYPE	LENGTH	WEIGHT
B1	8	#9	1	20'-4"	553	B3	5	#4	STR	2'-5"	8
B2	8	#4	STR	20'-8"	110	B5	8	#9	1	17'-8"	481
B3	5	#4	STR	2'-5"	8	B6	8	#4	STR	16'-5"	88
B4	5	#4	STR	22'-7"	75	B7	5	#4	STR	19'-3"	64
B8	5	#4	STR	10'-7"	35	B9	5	#4	STR	10'-1"	34
D1	10	#6	STR	1'-6"	23	D1	10	#6	STR	1'-6"	23
H3	6	#4	2	7'-7"	30	H1	6	#4	3	8'-3"	33
H4	6	#4	2	7'-9"	31	H2	6	#4	3	7'-10"	31
K1	6	#4	STR	3'-1"	12	K2	6	#4	STR	3'-4"	13
S1	23	#4	4	7'-5"	113	S1	24	#4	4	7'-5"	118
S2	23	#4	5	3'-2"	49	S2	24	#4	5	3'-2"	51
S3	6	#4	6	6'-6"	26	S3	4	#4	6	6'-6"	17
S4	19	#4	7	6'-10"	87	S4	19	#4	7	6'-10"	87
S5	1	#4	4	7'-6"	5	S5	1	#4	4	7'-6"	5
S6	1	#4	5	3'-3"	2	S6	1	#4	5	3'-3"	2
S7	10	#4	7	5'-1"	34	S7	10	#4	7	5'-1"	34
V1	24	#4	STR	4'-11"	79	V1	25	#4	STR	4'-11"	82
REINFORCING STEEL					1272 LBS.	REINFORCING STEEL					1171 LBS.

CLASS A CONCRETE BREAKDOWN - STAGE I			CLASS A CONCRETE BREAKDOWN - STAGE II		
POUR #1	CAP, LOWER PART OF WINGS	9.5 C.Y.	POUR #1	CAP, LOWER PART OF WINGS	9.3 C.Y.
POUR #2	UPPER PART OF WINGS	1.1 C.Y.	POUR #2	UPPER PART OF WINGS	1.1 C.Y.
TOTAL CLASS A CONCRETE		10.6 C.Y.	TOTAL CLASS A CONCRETE		10.4 C.Y.

TOTAL BILL OF MATERIAL FOR END BENT NO. 1

PILE EXCAVATION		CLASS A CONC.	REINF. STEEL	HP 12x53 STEEL PILES		18" STEEL SHEET PILES
IN SOIL LIN. FT.	NOT IN SOIL LIN. FT.	CU. YDS.	LBS.	NO.	LIN. FT.	SQ. FT.
55	25	21.0	2443	5	100	635

PROJECT NO. 17BP.14.R.134

TRANSYLVANIA COUNTY

STATION: 12+28.00 -L-

SHEET 4 OF 4

NORTH CAROLINA PROFESSIONAL SEAL 20777 ENGINEER HARDY L. WILLIS 7/17/14

V&M Vaughn & Melton Consulting Engineers
Asheville, North Carolina 828-253-2796
Charlotte, North Carolina 704-357-0488
Tri-Cities, Tennessee 423-467-8401
Knoxville, Tennessee 865-546-5800
Middlesboro, Kentucky 606-248-6600
Spartanburg, South Carolina 864-574-4775
Copyright © 2006 Vaughn & Melton, Inc. All Rights Reserved

STATE OF NORTH CAROLINA
DEPARTMENT OF TRANSPORTATION
RALEIGH

SUBSTRUCTURE

END BENT No. 1 DETAILS

DWN. BY: AW DATE: 01/2014
CHKD. BY: HLW DATE: 01/2014
DES. EGR. OF RECORD: RTS DATE: 01/2014

REVISIONS: NO. BY: DATE: NO. BY: DATE: 1 2 3 4

SHEET NO. S-16

TOTAL SHEETS 23

$$$$$$SYSTIME$$$$$
$$$$$$$$$$$$$$$$$$$$$$$$DGN$$$$$$$$$$$$$$$$$$$$$$$$
$$$$USERNAME$$$$

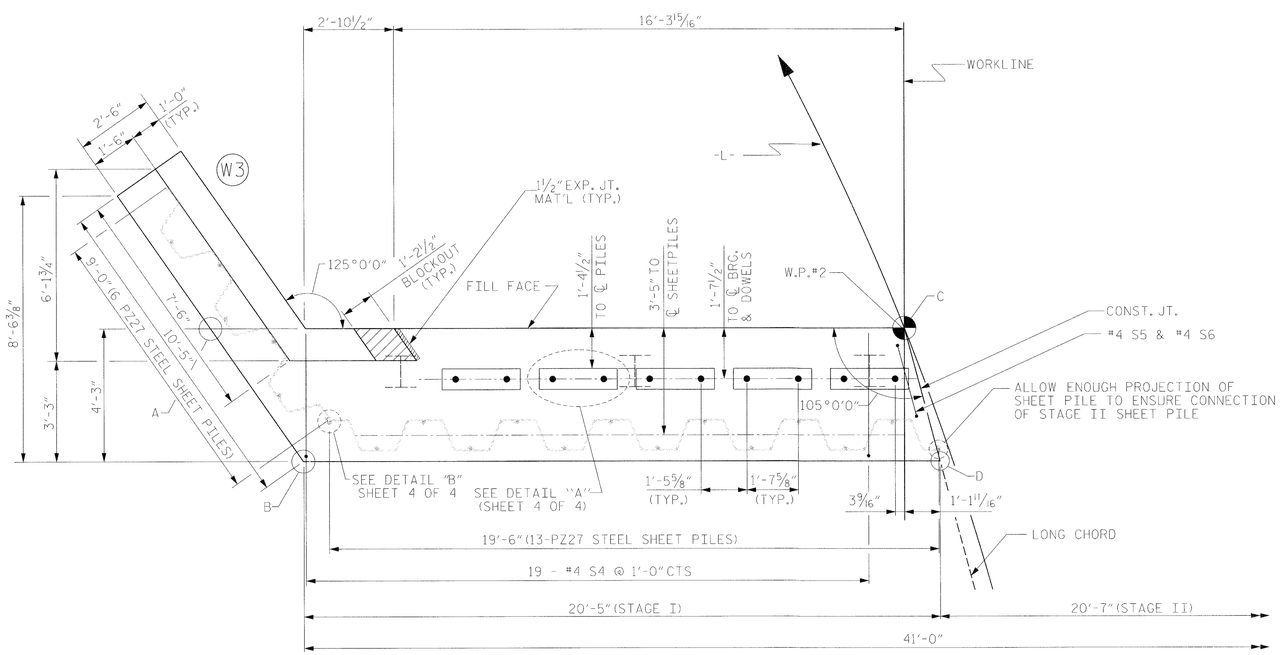

PLAN

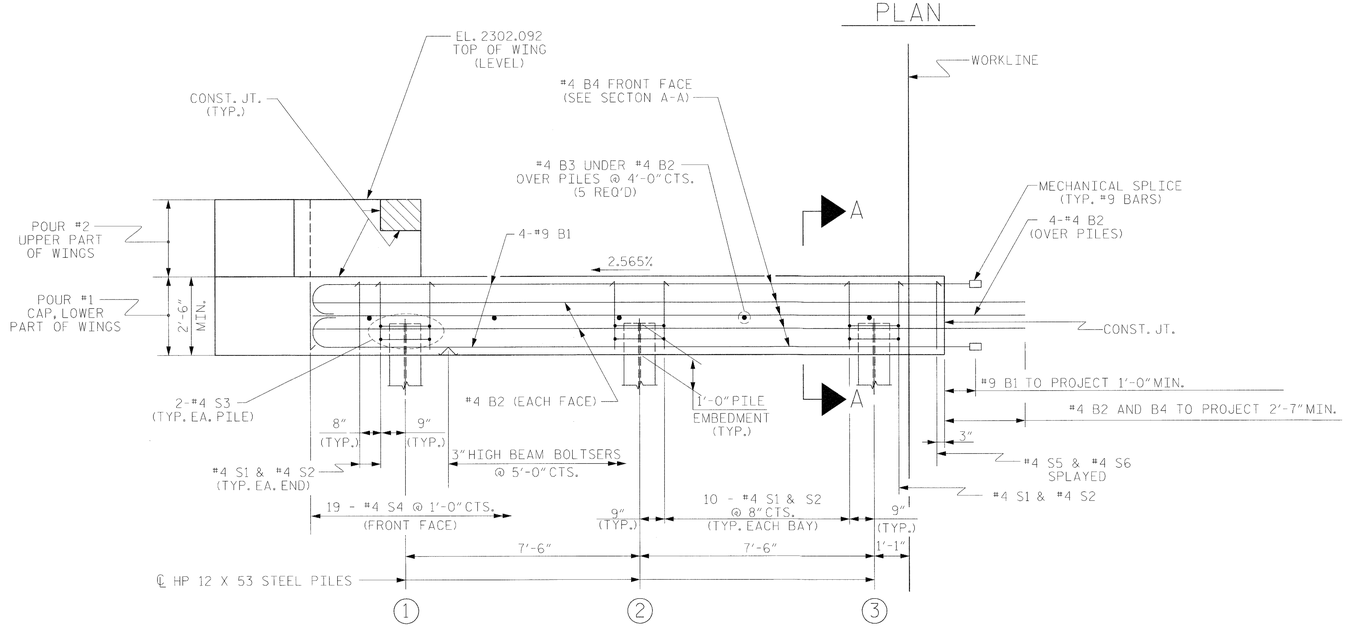

ELEVATION

WINGS NOT SHOWN FOR CLARITY.
FOR SECTION A-A, SEE SHEET 4 OF 4.

NOTES

STIRRUPS IN CAP MAY BE SHIFTED AS NECESSARY TO CLEAR DOWELS.

THE CONCRETE IN THE SHADED AREA OF THE WING SHALL BE POURED AFTER THE VERTICAL CONCRETE BARRIER RAIL IS CAST IF SLIP FORMING IS USED.

FOR PILE SPLICE DETAILS, SEE SHEET 4 OF 4.

FOR WING DETAILS, SEE SHEET 3 OF 4.

ELEVATIONS OF NOTED POINTS		
	TOP OF CAP	BOTTOM OF CAP
POINT A	2299.342	2296.842
POINT B	2299.311	2296.811
POINT C	2299.895	2297.395
POINT D	2299.864	2297.364

TOP OF PILE ELEVATIONS	
1	2297.957
2	2298.149
3	2298.342

NORTH CAROLINA PROFESSIONAL SEAL 20722 ENGINEER HARDY L. WILLIS 7/14/14

PROJECT NO. 17BP.14.R.134
TRANSYLVANIA COUNTY
STATION: 12+28.00 -L-

SHEET 1 OF 4

STATE OF NORTH CAROLINA
DEPARTMENT OF TRANSPORTATION
RALEIGH

SUBSTRUCTURE

END BENT No. 2
STAGE I

V&M Vaughn & Melton Consulting Engineers
Asheville, North Carolina 828-253-2796
Charlotte, North Carolina 704-357-0488
Tri-Cities, Tennessee 423-467-8401
Knoxville, Tennessee 865-546-5800
Middlesboro, Kentucky 606-248-6600
Spartanburg, South Carolina 864-574-4775
Copyright © 2006 Vaughn & Melton, Inc. All Rights Reserved

DWN. BY: AW DATE: 01/2014
CHKD. BY: HLW DATE: 01/2014
DES. EGR. OF RECORD: RTS DATE: 01/2014

REVISIONS						SHEET NO.
NO.	BY:	DATE:	NO.	BY:	DATE:	S-17
1			3			TOTAL SHEETS
2			4			23

$$$$$$SYSTIME$$$$$
$$$$$$$$$$$$$$$$$$$$$$DGN$$$$$$$$$$$$$$$$$$$$$$
$$$$USFRNAMF$$$$

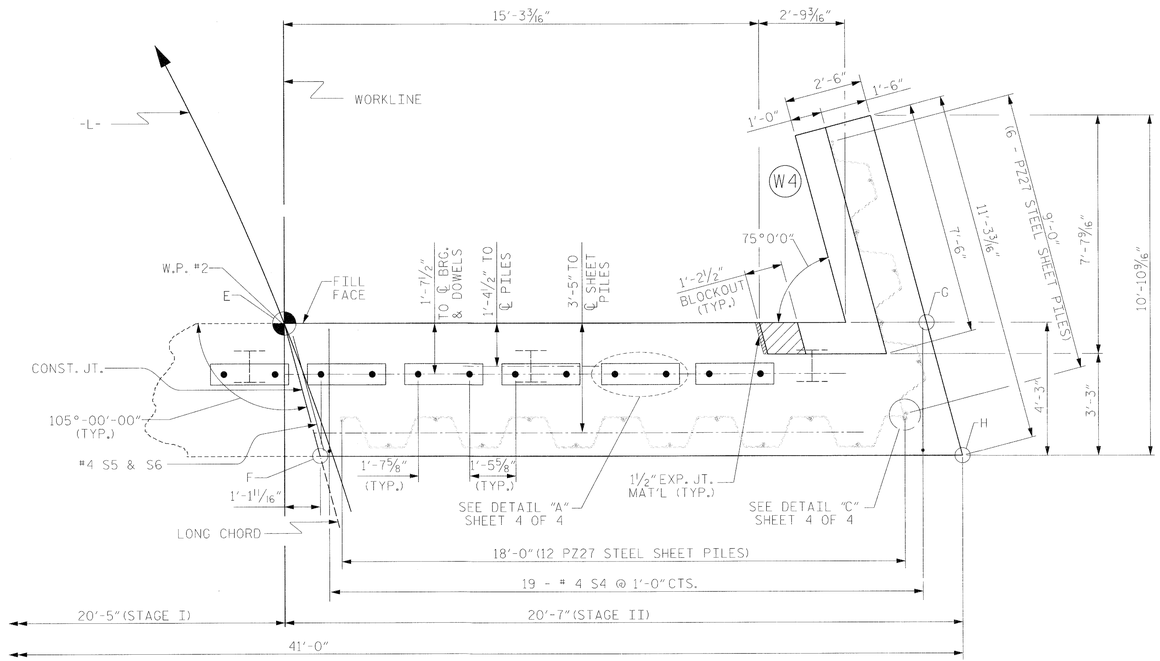

PLAN

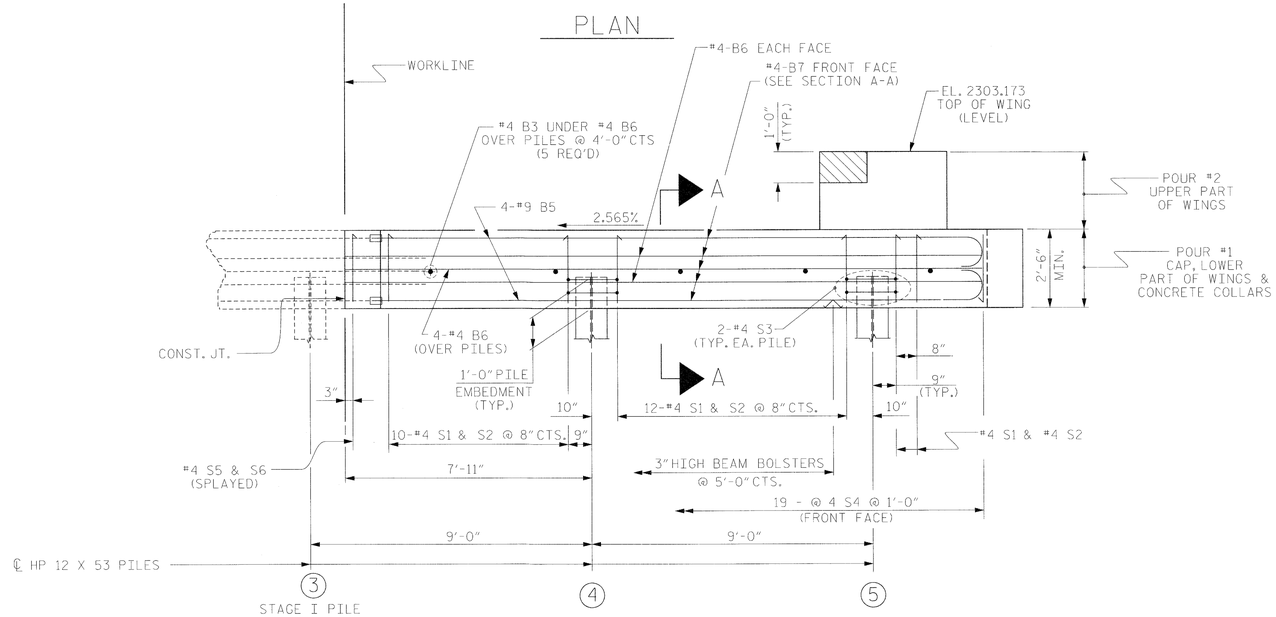

ELEVATION

WINGS NOT SHOWN FOR CLARITY.
FOR SECTION A-A, SEE SHEET 4 OF 4.

NOTES

STIRRUPS IN CAP MAY BE SHIFTED AS NECESSARY TO CLEAR DOWELS.

THE CONCRETE IN THE SHADED AREA OF THE WING SHALL BE POURED AFTER THE VERTICAL CONCRETE BARRIER RAIL IS CAST IF SLIP FORMING IS USED.

FOR PILE SPLICE DETAILS, SEE SHEET 4 OF 4.

FOR WING DETAILS, SEE SHEET 3 OF 4.

ELEVATIONS OF NOTED POINTS		
	TOP OF CAP	BOTTOM OF CAP
POINT E	2299.895	2297.395
POINT F	2299.864	2297.364
POINT G	2300.423	2297.923
POINT H	2300.392	2297.892

TOP OF PILE ELEVATIONS	
4	2298.573
5	2298.803

NORTH CAROLINA PROFESSIONAL SEAL 20774 ENGINEER HARDY L. WILLIS 7/14/14

PROJECT NO. 17BP.14.R.134

TRANSYLVANIA COUNTY

STATION: 12+28.00 -L-

SHEET 2 OF 4

V&M Vaughn & Melton Consulting Engineers
Asheville, North Carolina 828-253-2796
Charlotte, North Carolina 704-357-0488
Tri-Cities, Tennessee 423-467-8401
Knoxville, Tennessee 865-546-5800
Middlesboro, Kentucky 606-248-6600
Spartanburg, South Carolina 864-574-4775
Copyright © 2006 Vaughn & Melton, Inc. All Rights Reserved

STATE OF NORTH CAROLINA
DEPARTMENT OF TRANSPORTATION
RALEIGH

SUBSTRUCTURE

END BENT No. 2
STAGE II

DWN. BY: AW DATE: 01/2014
CHKD. BY: HLW DATE: 01/2014
DES. EGR. OF RECORD: RTS DATE: 01/2014

REVISIONS							SHEET NO.
NO.	BY:	DATE:	NO.	BY:	DATE:		S-18
1			3				TOTAL SHEETS
2			4				23

$$$$$$SYSTIME$$$$$
$$$$$$$$$$$$$$$$$$$$DGN$$$$$$$$$$$$$$$$$$$$$$$
$$$$USERNAME$$$$

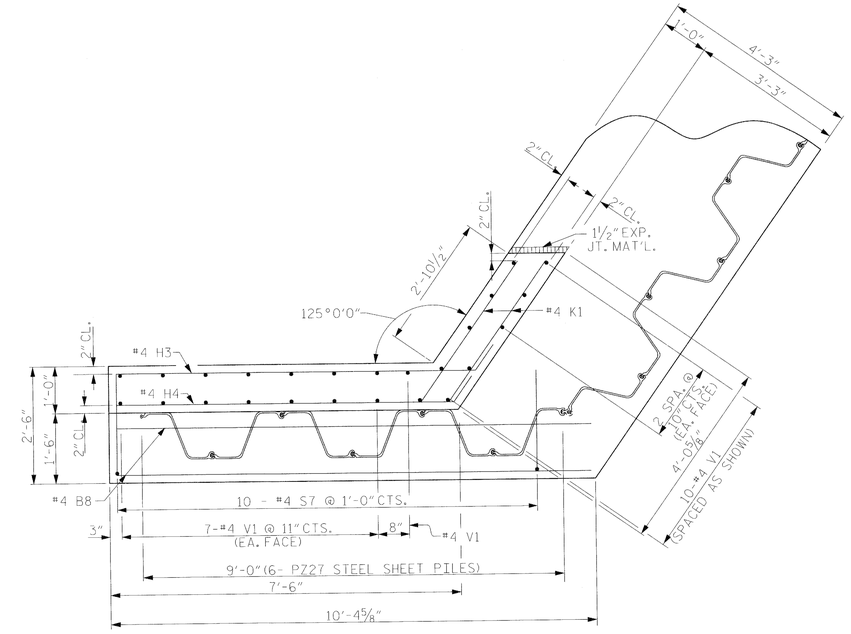

PLAN OF WING (W3)

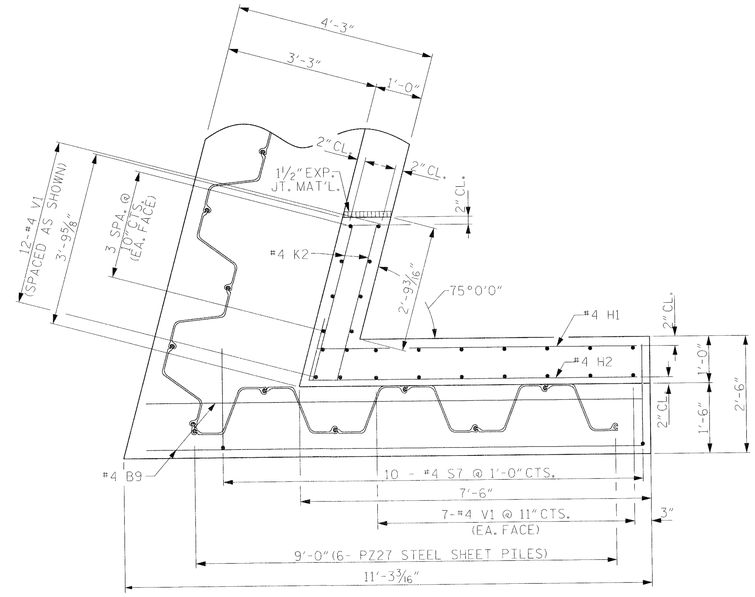

PLAN OF WING (W4)

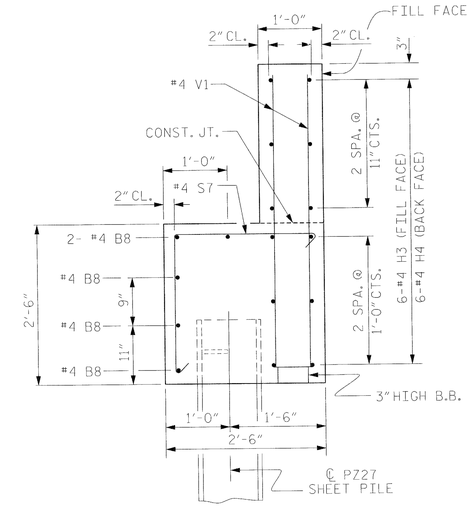

SECTION X-X

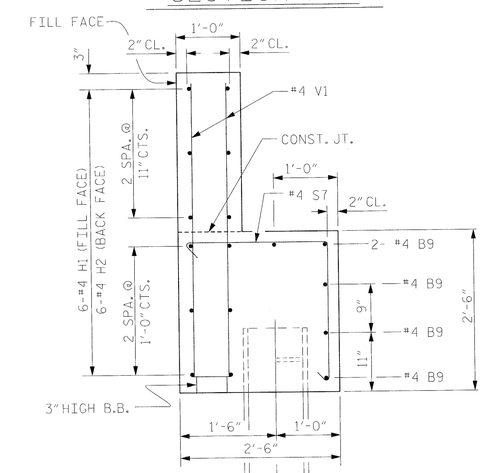

SECTION Y-Y

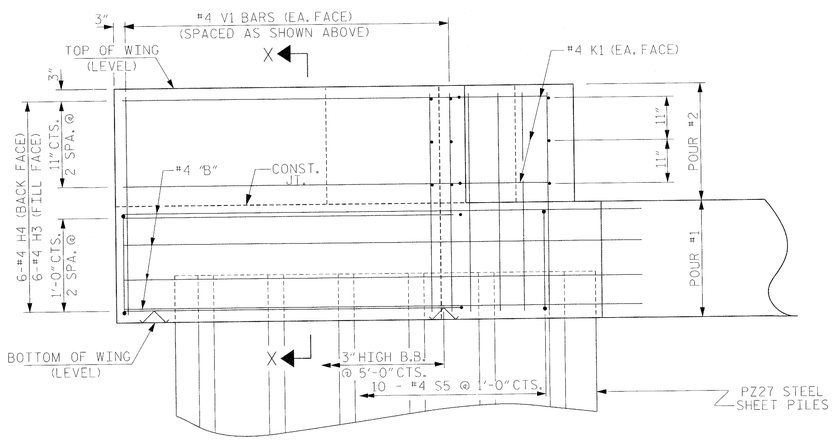

ELEVATION OF WING (W3)

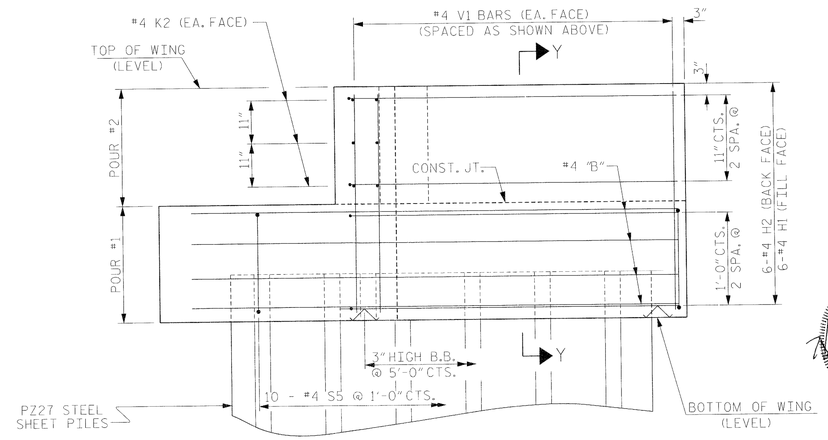

ELEVATION OF WING (W4)

WING DETAILS

NORTH CAROLINA PROFESSIONAL SEAL 030747 ENGINEER HARDY L. WILLIS
7/14/14

PROJECT NO. 17BP.14.R.134

TRANSYLVANIA COUNTY

STATION: 12+28.00 -L-

SHEET 3 OF 4

V&M Vaughn & Melton Consulting Engineers

Asheville, North Carolina 828-253-2796

Charlotte, North Carolina 704-357-0488
Tri-Cities, Tennessee 423-467-8401
Knoxville, Tennessee 865-546-5800
Middlesboro, Kentucky 606-248-6600
Spartanburg, South Carolina 864-574-4775

Copyright © 2006 Vaughn & Melton, Inc. All Rights Reserved

DWN. BY: AW DATE: 01/2014
CHKD. BY: HLW DATE: 01/2014
DES. EGR. OF RECORD: RTS DATE: 01/2014

REVISIONS								SHEET NO.
NO.	BY:	DATE:	NO.	BY:	DATE:			S-19
1			3					TOTAL SHEETS
2			4					23

STATE OF NORTH CAROLINA
DEPARTMENT OF TRANSPORTATION
RALEIGH

SUBSTRUCTURE
END BENT NO. 2
WING DETAILS

$$$$$$SYSTIME$$$$$
$$$$$$$$$$$$$$$$$$$$DGN$$$$$$$$$$$$$$$$$$$$$$
$$$$USERNAME$$$$

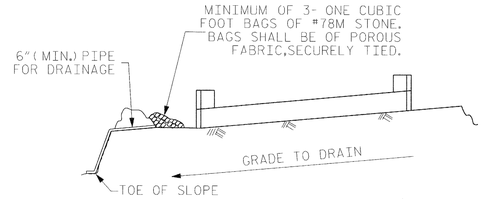

BAGGED STONE AND PIPE SHALL BE PLACED IMMEDIATELY AFTER COMPLETION OF END BENT EXCAVATION. PIPE MAY BE EITHER CONCRETE, CORRUGATED STEEL, CORRUGATED ALUMINUM ALLOY, OR CORRUGATED PLASTIC. PERFORATED PIPE WILL NOT BE ALLOWED.

BAGGED STONE SHALL REMAIN IN PLACE UNTIL THE ENGINEER DIRECTS THAT IT BE REMOVED. THE CONTRACTOR SHALL REMOVE AND DISPOSE OF SILT ACCUMULATIONS AT BAGGED STONE WHEN SO DIRECTED BY THE ENGINEER. BAGS SHALL BE REMOVED AND REPLACED WHENEVER THE ENGINEER DETERMINES THAT THEY HAVE DETERIORATED AND LOST THEIR EFFECTIVENESS.

NO SEPARATE PAYMENT WILL BE MADE FOR THIS WORK AND THE ENTIRE COST OF THIS WORK SHALL BE INCLUDED IN THE UNIT CONTRACT PRICE BID FOR THE SEVERAL PAY ITEMS.

TEMPORARY DRAINAGE AT END BENT

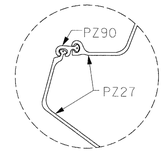

DETAIL "B"

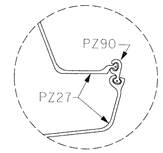

DETAIL "C"

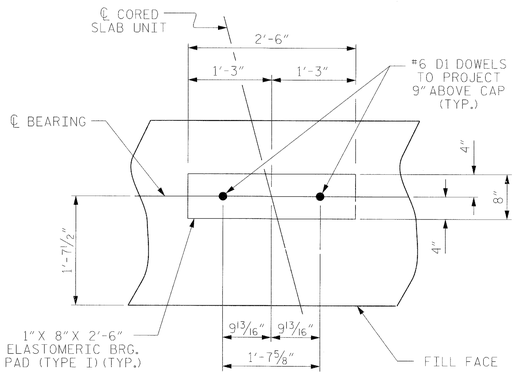

DETAIL "A"

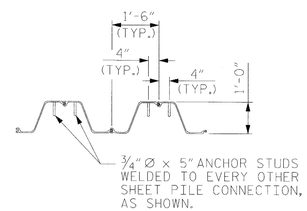

ANCHOR STUD DETAIL

SHEET PILE CONNECTION DETAILS

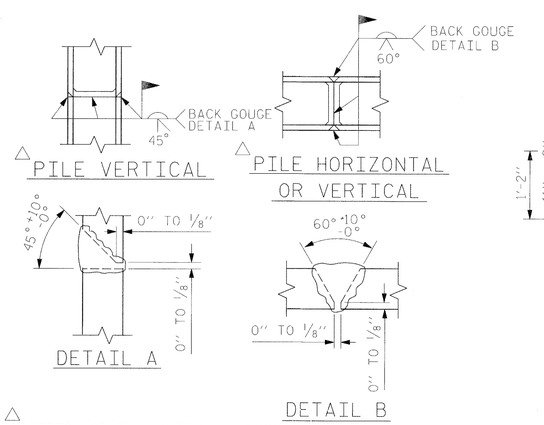

PILE SPLICE DETAILS

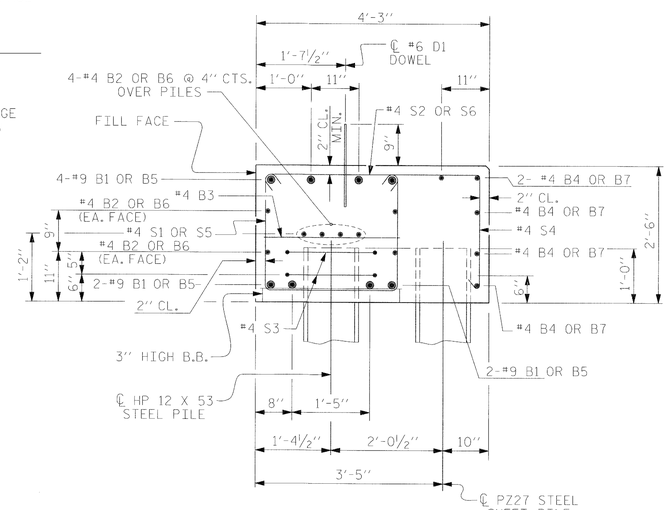

SECTION A-A

BAR TYPES

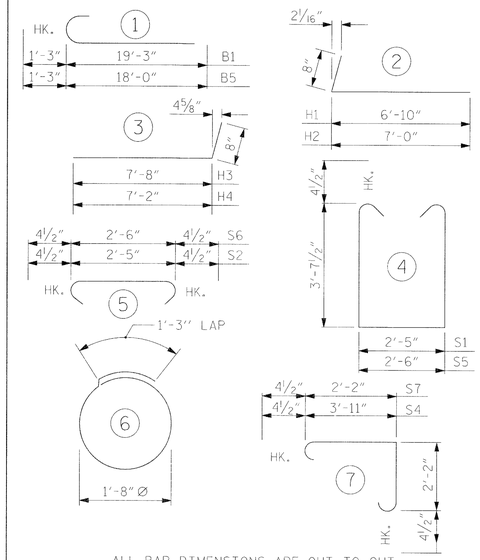

ALL BAR DIMENSIONS ARE OUT TO OUT.

END BENT No. 2	18" STEEL SHEET PILES	
HP 12 X 53 STEEL PILES	NO. PZ 27 =	37
	NO. PZ 90 =	2
NO: 5 LIN. FT.= 75	TOTAL =	39
	TOTAL SQ. FT. =	573

PILE EXCAVATION	
IN SOIL	NOT IN SOIL
LIN. FT. = 50	LIN. FT. = 25

BILL OF MATERIAL FOR END BENT NO. 2

STAGE I

BAR	NO.	SIZE	TYPE	LENGTH	WEIGHT
B1	8	#9	1	20'-6"	558
B2	8	#4	STR	20'-10"	111
B3	5	#4	STR	2'-5"	8
B4	5	#4	STR	22'-9"	76
B8	5	#4	STR	10'-1"	34
D1	10	#6	STR	1'-6"	23
H3	6	#4	3	8'-4"	33
H4	6	#4	3	7'-10"	31
K1	6	#4	STR	3'-7"	14
S1	23	#4	4	7'-5"	113
S2	23	#4	5	3'-2"	49
S3	6	#4	6	6'-6"	26
S4	19	#4	7	6'-10"	87
S5	1	#4	4	7'-6"	5
S6	1	#4	5	3'-3"	2
S7	10	#4	7	5'-1"	34
V1	25	#4	STR	4'-11"	82
REINFORCING STEEL					1286 LBS.

CLASS A CONCRETE BREAKDOWN - STAGE I

POUR #1	CAP, LOWER PART OF WINGS	9.8 C.Y.
POUR #2	UPPER PART OF WINGS	1.1 C.Y.
TOTAL CLASS A CONCRETE		10.9 C.Y.

STAGE II

BAR	NO.	SIZE	TYPE	LENGTH	WEIGHT
B3	5	#4	STR	2'-5"	8
B5	8	#9	1	19'-3"	524
B6	8	#4	STR	18'-0"	96
B7	5	#4	STR	20'-2"	67
B9	5	#4	STR	10'-7"	35
D1	10	#6	STR	1'-6"	23
H1	6	#4	2	7'-6"	30
H2	6	#4	2	7'-8"	31
K1	6	#4	STR	3'-5"	14
S1	24	#4	4	7'-5"	118
S2	24	#4	5	3'-2"	51
S3	4	#4	6	6'-6"	17
S4	19	#4	7	6'-10"	87
S5	1	#4	4	7'-6"	5
S6	1	#4	5	3'-3"	2
S7	10	#4	7	5'-1"	34
V1	26	#4	STR	4'-11"	86
REINFORCING STEEL					1228 LBS.

CLASS A CONCRETE BREAKDOWN - STAGE II

POUR #1	CAP, LOWER PART OF WINGS	9.6 C.Y.
POUR #2	UPPER PART OF WINGS	1.1 C.Y.
TOTAL CLASS A CONCRETE		10.7 C.Y.

TOTAL BILL OF MATERIAL FOR END BENT NO. 2

PILE EXCAVATION		CLASS A CONC.	REINF. STEEL	HP 12x53 STEEL PILES		18" STEEL SHEET PILES
IN SOIL	NOT IN SOIL	CU. YDS.	LBS.	NO.	LIN. FT.	SQ. FT.
LIN. FT.	LIN. FT.					
50	25	21.6	2514	5	75	573

NORTH CAROLINA PROFESSIONAL SEAL ENGINEER HARDY L. WILLIS 7/14/14

PROJECT NO. 17BP.14.R.134

TRANSYLVANIA COUNTY

STATION: 12+28.00 -L-

SHEET 4 OF 4

V&M Vaughn & Melton Consulting Engineers
Asheville, North Carolina 828-253-2796
Charlotte, North Carolina 704-357-0488
Tri-Cities, Tennessee 423-467-8401
Knoxville, Tennessee 865-546-5800
Middlesboro, Kentucky 606-248-6600
Spartanburg, South Carolina 864-574-4775
Copyright © 2006 Vaughn & Melton, Inc. All Rights Reserved

STATE OF NORTH CAROLINA
DEPARTMENT OF TRANSPORTATION
RALEIGH

SUBSTRUCTURE

END BENT No. 2 DETAILS

DWN. BY: AW DATE: 01/2014
CHKD. BY: HLW DATE: 01/2014
DES. EGR. OF RECORD: RTS DATE: 01/2014

REVISIONS								SHEET NO.
NO.	BY:	DATE:	NO.	BY:	DATE:			S-20
1			3					TOTAL SHEETS
2			4					23

$$$$$$SYSTIME$$$$$
$$$$$$$$$$$$$$$$$$$$$$DGN$$$$$$$$$$$$$$$$$$$$$$
$$$$USERNAME$$$$

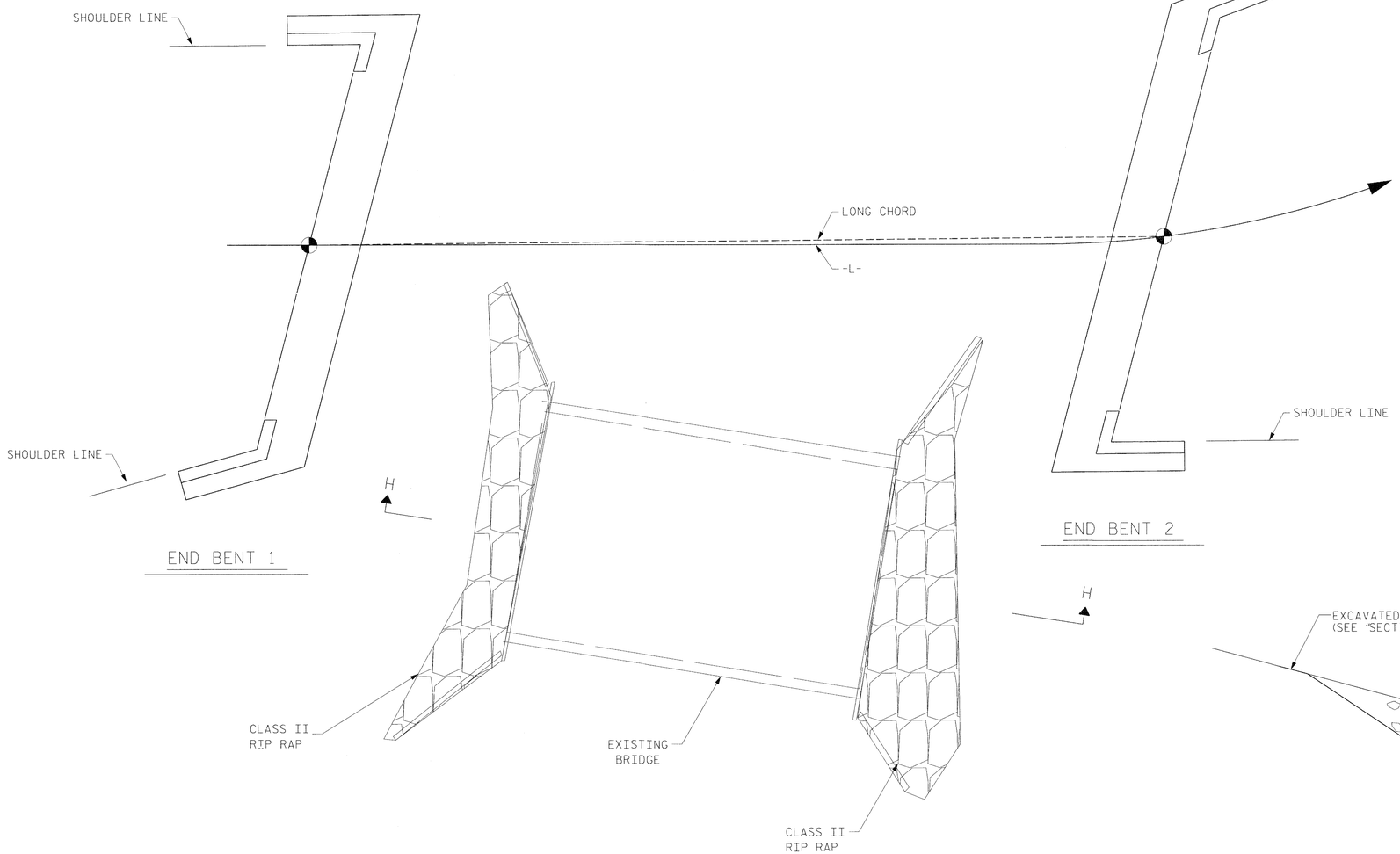

NOTES :

PLACE RIP RAP IN EXCAVATED AREAS.

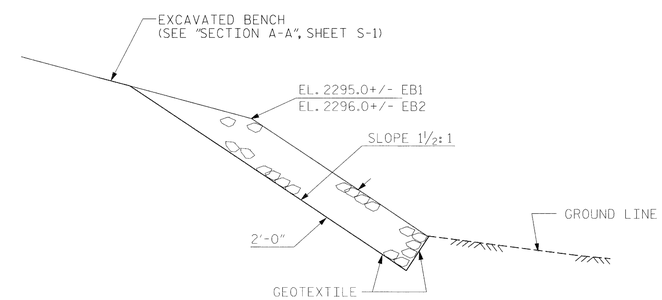

SECTION H-H

PROJECT NO. 17BP.14.R.134

TRANSYLVANIA COUNTY

STATION: 12+28.00 -L-

NORTH CAROLINA PROFESSIONAL SEAL 20147 ENGINEER HARDY L. WILLIS 11/4/14

ESTIMATED QUANTITIES		
BRIDGE @ STA. 12+28.00	RIP RAP CLASS II (2'-0" THICK)	GEOTEXTILE FOR DRAINAGE
	TONS	SQUARE YARDS
END BENT 1	22	25
END BENT 2	28	32

V&M Vaughn & Melton Consulting Engineers

Asheville, North Carolina 828-253-2796

Charlotte, North Carolina 704-357-0488

Tri-Cities, Tennessee 423-467-8401

Knoxville, Tennessee 865-546-5800

Middlesboro, Kentucky 606-248-6600

Spartanburg, South Carolina 864-574-4775

Copyright © 2006 Vaughn & Melton, Inc. All Rights Reserved

DWN. BY: AW DATE: 01/2014

CHKD. BY: HLW DATE: 01/2014

DES. EGR. OF RECORD: RTS DATE: 01/2014

STATE OF NORTH CAROLINA
DEPARTMENT OF TRANSPORTATION
RALEIGH

STANDARD

RIP RAP DETAILS

REVISIONS							
NO.	BY:	DATE:	NO.	BY:	DATE:		
1			3				
2			4				

SHEET NO. S-21

TOTAL SHEETS 23

$$$$$$SYSTIME$$$$$
$$$$$$$$$$$$$$$$$$$$$$$$DGN$$$$$$$$$$$$$$$$$$$$$$$
$$$$USERNAME$$$$

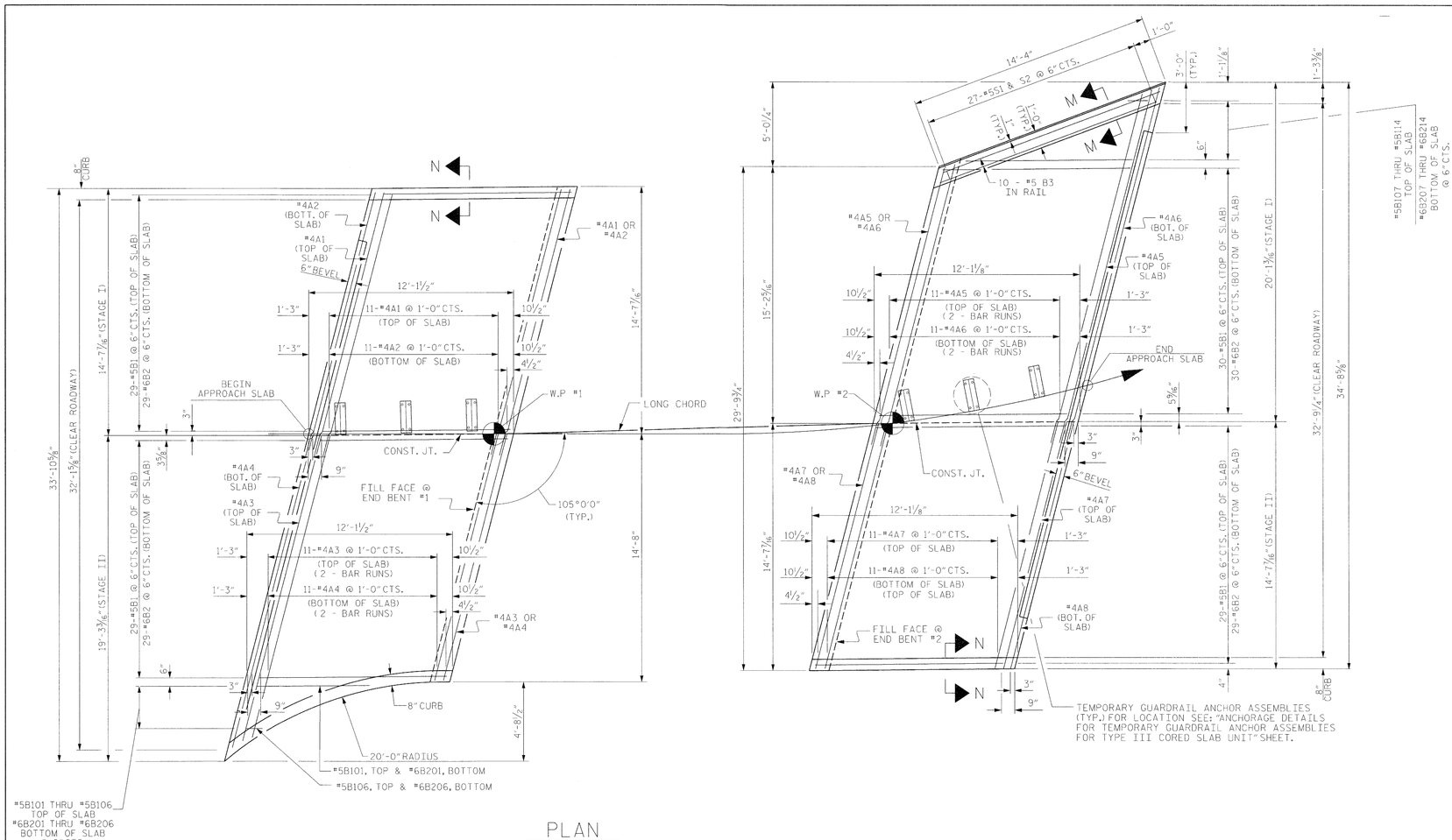

PLAN

FOR SECTION M-M, SEE SHEET 2 OF 2

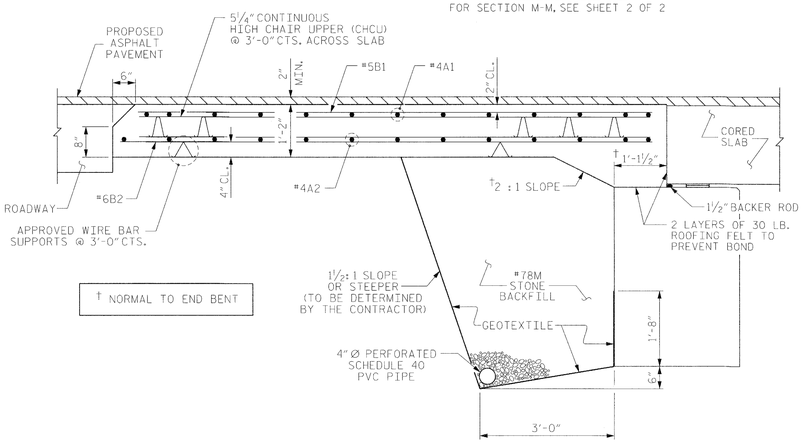

SECTION THRU SLAB

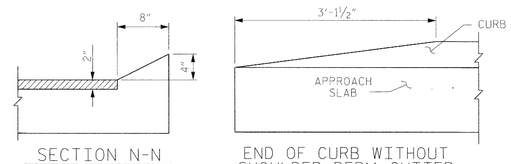

SECTION N-N

END OF CURB WITHOUT SHOULDER BERM GUTTER

CURB DETAILS

BILL OF MATERIAL

APP. SLAB AT EB #1 STAGE I

BAR	NO.	SIZE	TYPE	LENGTH	WEIGHT
* A1	13	#4	STR	17'-2"	148
A2	13	#4	STR	16'-9"	145
* B1	29	#5	STR	11'-3"	340
B2	29	#6	STR	11'-9"	512
REINFORCING STEEL				LBS.	657
* EPOXY COATED REINFORCING STEEL				LBS.	489
CLASS AA CONCRETE				C.Y.	9.5

APP. SLAB AT EB #1 STAGE II

BAR	NO.	SIZE	TYPE	LENGTH	WEIGHT
* A3	26	#4	STR	10'-11"	190
A4	26	#4	STR	10'-9	187
* B1	29	#5	STR	11'-3"	340
B2	29	#6	STR	11'-9"	512
*B101	1	#5	STR	6'-8"	7
*B102	1	#5	STR	4'-10"	5
*B103	1	#5	STR	3'-7"	4
*B104	1	#5	STR	2'-6"	3
*B105	1	#5	STR	1'-8"	2
*B106	1	#5	STR	11"	1
B201	1	#6	STR	7'-2"	11
B202	1	#6	STR	5'-4"	8
B203	1	#6	STR	4'-1"	6
B204	1	#6	STR	3'-0"	5
B205	1	#6	STR	2'-2"	3
B206	1	#6	STR	1'-5"	2
REINFORCING STEEL				LBS.	734
* EPOXY COATED REINFORCING STEEL				LBS.	552
CLASS AA CONCRETE				C.Y.	10.3

APP. SLAB AT EB #2 STAGE I

BAR	NO.	SIZE	TYPE	LENGTH	WEIGHT
* A5	26	#4	STR	12'-4"	214
A6	26	#4	STR	12'-2"	211
* B1	30	#5	STR	11'-3"	352
B2	30	#6	STR	11'-9"	529
* B3	10	#5	STR	14'-0"	146
*B107	1	#5	STR	9'-10"	10
*B108	1	#5	STR	8'-7"	9
*B109	1	#5	STR	7'-4"	8
*B110	1	#5	STR	6'-1"	6
*B111	1	#5	STR	4'-11"	5
*B112	1	#5	STR	3'-8"	4
*B113	1	#5	STR	2'-5"	3
*B114	1	#5	STR	1'-2"	1
B207	1	#6	STR	10'-4"	16
B208	1	#6	STR	9'-1"	14
B209	1	#6	STR	7'-10"	12
B210	1	#6	STR	6'-7"	10
B211	1	#6	STR	5'-5"	8
B212	1	#6	STR	4'-2"	6
B213	1	#6	STR	2'-11"	4
B214	1	#6	STR	1'-8"	3
*S1	27	#5	1	5'-11"	167
*S2	27	#5	2	7'-2"	202
REINFORCING STEEL				LBS.	813
* EPOXY COATED REINFORCING STEEL				LBS.	1127
CLASS AA CONCRETE				C.Y.	13.2

APP.SLAB AT EB #2 STAGE II

BAR	NO.	SIZE	TYPE	LENGTH	WEIGHT
* A7	13	#4	STR	14'-11"	130
A8	13	#4	STR	14'-11"	130
* B1	29	#5	STR	11'-1"	335
B2	29	#6	STR	11'-7"	506
REINFORCING STEEL				LBS.	636
* EPOXY COATED REINFORCING STEEL				LBS.	465
CLASS AA CONCRETE				C.Y.	9.5

BAR TYPES

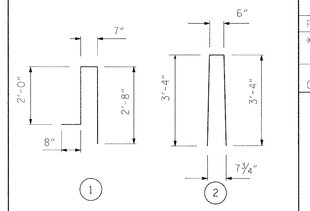

ALL BAR DIMENSIONS ARE OUT TO OUT

SPLICE LENGTHS

BAR SIZE	EPOXY COATED	UNCOATED
#4	2'-0"	1'-9"
#5	2'-6"	2'-2"
#6	3'-10"	2'-7"

PROJECT NO. 17BP.14.R.134

TRANSYLVANIA COUNTY

STATION: 12+28.00 -L-

SHEET 1 OF 2

STATE OF NORTH CAROLINA
DEPARTMENT OF TRANSPORTATION
RALEIGH

STANDARD
BRIDGE APPROACH SLAB
FOR PRESTRESSED CONCRETE
CORED SLAB UNIT
(SUB-REGIONAL TIER)
105° SKEW

NORTH CAROLINA PROFESSIONAL SEAL 20777 ENGINEER HARDY L. WILLIS 7/14/14

REVISIONS							SHEET NO.
NO.	BY:	DATE:	NO.	BY:	DATE:		S-22
1			3				TOTAL SHEETS
2			4				23

ASSEMBLED BY :	AW	DATE : 01/2014	
CHECKED BY :	RTS	DATE : 01/2014	
DRAWN BY : SHS/MAA 5-09		REV. 12-11	MAA/AAC
CHECKED BY : BCH 5-09			

$$$$$$SYSTIME$$$$$
$$$$$$$$$$$$$$$$$$$$$$DGN$$$$$$$$$$$$$$$$$$$$$$
$$$$$USERNAME$$$$

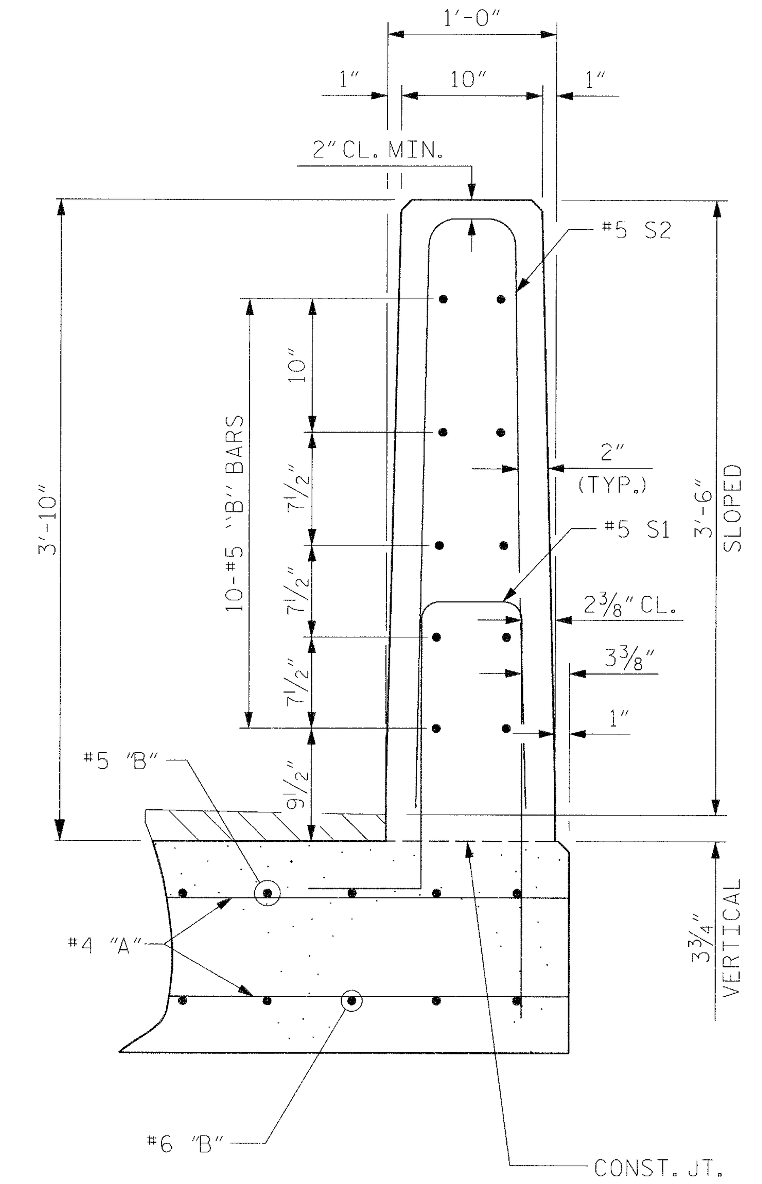

SECTION M-M
VERTICAL CONCRETE BARRIER RAIL SECTION

NOTES

FOR BRIDGE APPROACH FILL INCLUDING GEOTEXTILE, 4" Ø DRAINAGE PIPE, AND #78M STONE BACKFILL, SEE ROADWAY PLANS.

GEOTEXTILE SHALL BE TYPE 1IN ACCORDANCE WITH THE STANDARD SPECIFICATIONS SECTION 1056.

#78M STONE BACKFILL (CLASS V SELECT MATERIAL) SHALL BE IN ACCORDANCE WITH STANDARD SPECIFICATIONS SECTION 1016.

#78M STONE BACKFILL IS TO BE CONTINUOUS ALONG FILL FACE OF BACKWALL FROM OUTSIDE EDGE TO OUTSIDE EDGE OF APPROACH SLAB.

FOR THE 4" Ø DRAINAGE PIPE OUTLET(S), SEE ROADWAY STANDARD DRAWINGS.

AREA BETWEEN THE WINGWALL AND APPROACH SLAB SHALL BE GRADED TO DRAIN THE WATER AWAY FROM THE FILL FACE OF THE BRIDGE AND SHALL BE PAVED. SEE ROADWAY PLANS.

APPROACH SLAB GROOVING IS NOT REQUIRED.

VERTICAL CONCRETE BARRIER RAIL ON THE APPROACH SLAB SHALL BE PAID FOR UNDER THE LUMP SUM PAY ITEM "BRIDGE APPROACH SLABS".

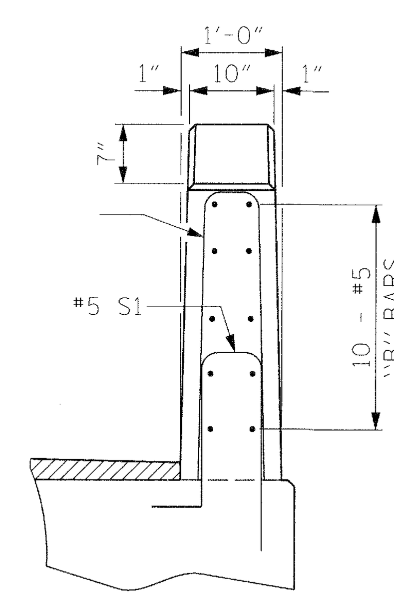

END VIEW

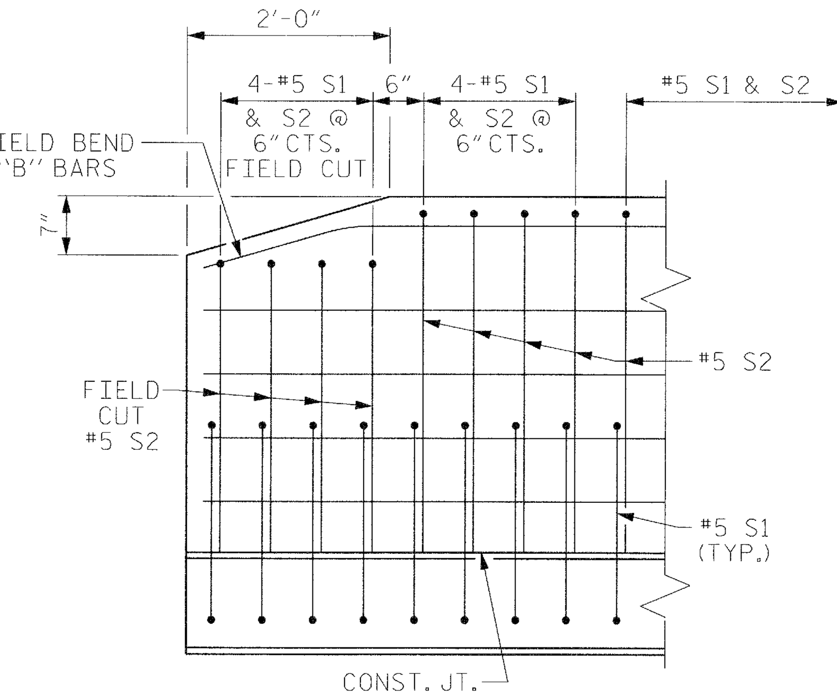

SIDE VIEW

END OF RAIL DETAILS

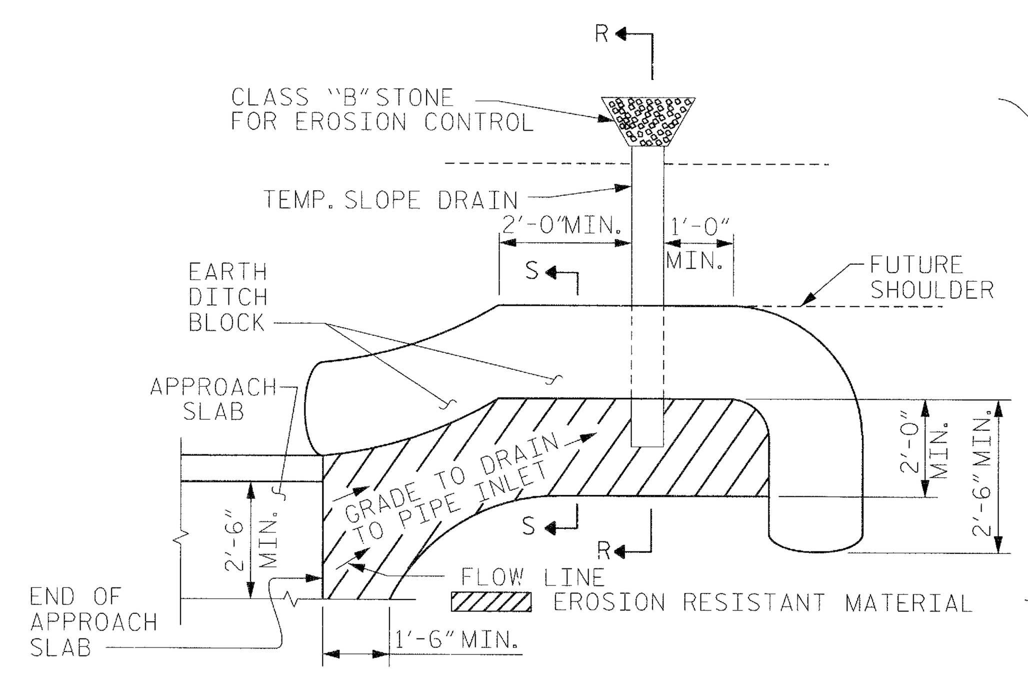

NOTE: IMMEDIATELY AFTER THE CONSTRUCTION OF THE APPROACH SLAB, THE CONTRACTOR SHALL PROVIDE TEMPORARY BERM AND SLOPE DRAIN. CONTRACTOR SHALL GRADE TO PIPE INLET AND PROVIDE EROSION RESISTANT MATERIAL AS SHOWN. THE EROSION RESISTANT MATERIAL SHALL BE EITHER 1) ASPHALT PLANT MIX, TYPE 1 OR TYPE 2, MIN. 2" DEPTH, 2) EROSION CONTROL MAT, OR 3) CONCRETE, AS DIRECTED BY THE ENGINEER. THE SLOPE DRAIN SHALL CONSIST OF A NON-PERFORATED TEMPORARY DRAINAGE PIPE, 12 INCHES IN DIAMETER.

PLAN VIEW

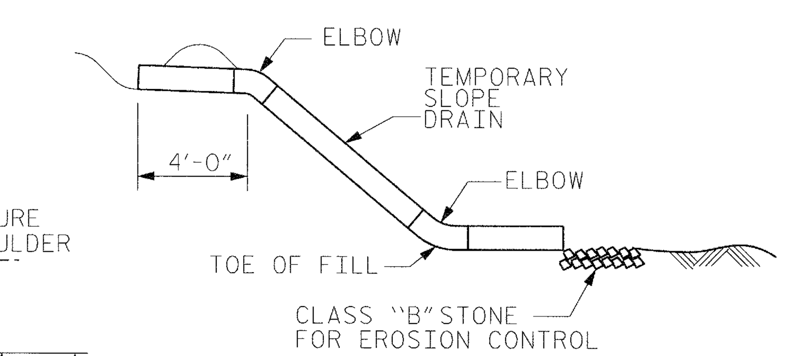

SECTION R-R

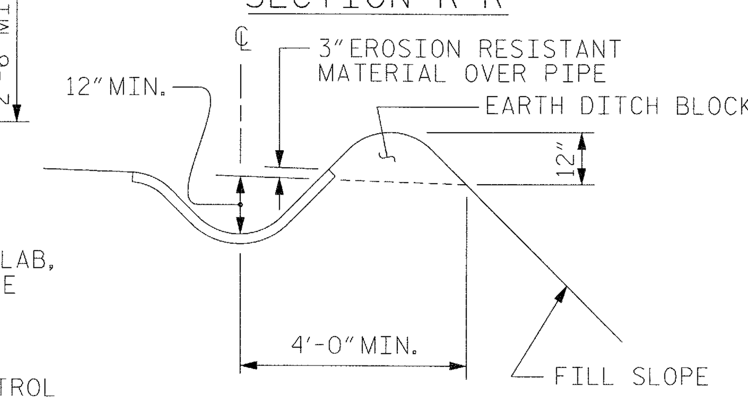

SECTION S-S

TEMPORARY BERM AND SLOPE DRAIN DETAILS

(TO BE USED WHEN SHOULDER BERM GUTTER IS REQUIRED)

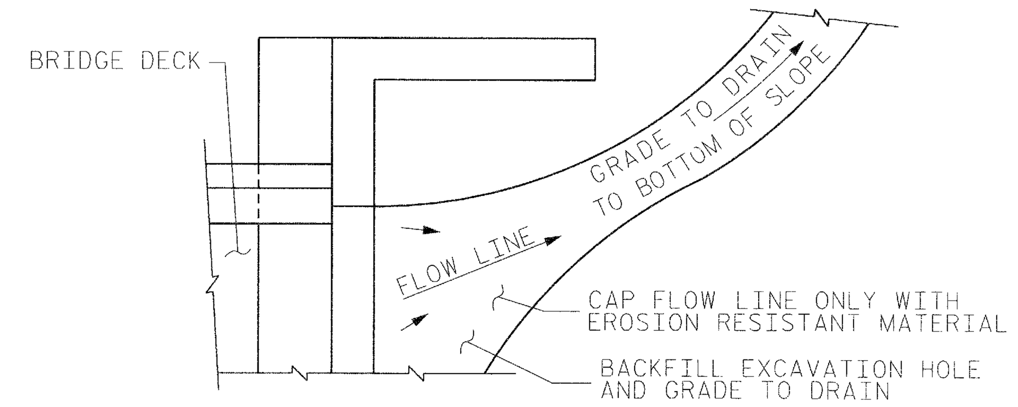

NOTE: IF THE APPROACH SLAB IS NOT CONSTRUCTED IMMEDIATELY AFTER THE BACKFILLING OF THE END BENT EXCAVATION, GRADE TO DRAIN TO THE BOTTOM OF THE SLOPE AND PROVIDE EROSION RESISTANT MATERIAL, SUCH AS FIBERGLASS ROVING OR AS DIRECTED BY THE ENGINEER TO PREVENT SOIL EROSION AND TO PROTECT THE AREA ADJACENT TO THE STRUCTURE. THE CONTRACTOR WILL BE REQUIRED TO REMOVE THESE MATERIALS PRIOR TO CONSTRUCTION OF THE APPROACH SLAB.

TEMPORARY DRAINAGE DETAIL

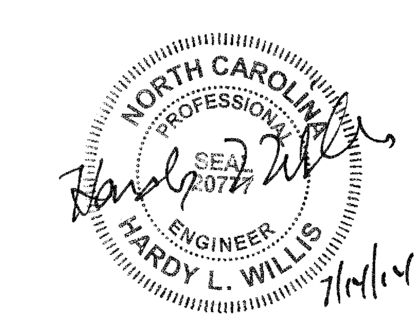

PROJECT NO. 17BP.14.R.134

TRANSYLVANIA COUNTY

STATION: 12+28.00 -L-

SHEET 2 OF 2

STATE OF NORTH CAROLINA
DEPARTMENT OF TRANSPORTATION
RALEIGH

STANDARD
BRIDGE APPROACH SLAB
FOR PRESTRESSED CONCRETE
CORED SLAB UNIT
(SUB-REGIONAL TIER)
105° SKEW

REVISIONS							SHEET NO.
NO.	BY:	DATE:	NO.	BY:	DATE:		S-23
1			3				TOTAL SHEETS
2			4				23

ASSEMBLED BY :	DPP	DATE :	9/2013
CHECKED BY :	RTS	DATE :	9/2013
DRAWN BY : SHS/MAA 5-09	REV. 12-11		MAA/AAC
CHECKED BY : BCH 5-09			

$$$$$$SYSTIME$$$$$
$$$$$$$$$$$$$$$$$$$$$DGN$$$$$$$$$$$$$$$$$$$$$$$
$$$$USERNAME$$$$

STANDARD NOTES

DESIGN DATA:

SPECIFICATIONS	A.A.S.H.T.O. (CURRENT)
LIVE LOAD	SEE PLANS
IMPACT ALLOWANCE	SEE A.A.S.H.T.O.
STRESS IN EXTREME FIBER OF	
STRUCTURAL STEEL - AASHTO M270 GRADE 36	20,000 LBS. PER SQ. IN.
- AASHTO M270 GRADE 50W	27,000 LBS. PER SQ. IN.
- AASHTO M270 GRADE 50	27,000 LBS. PER SQ. IN.
REINFORCING STEEL IN TENSION	
GRADE 60	24,000 LBS. PER SQ. IN.
CONCRETE IN COMPRESSION	1,200 LBS. PER SQ. IN.
CONCRETE IN SHEAR	SEE A.A.S.H.T.O.
STRUCTURAL TIMBER - TREATED OR	
UNTREATED - EXTREME FIBER STRESS	1,800 LBS. PER SQ. IN.
COMPRESSION PERPENDICULAR TO GRAIN OF TIMBER	375 LBS. PER SQ. IN.
EQUIVALENT FLUID PRESSURE OF EARTH	30 LBS. PER CU. FT. (MINIMUM)

MATERIAL AND WORKMANSHIP:

EXCEPT AS MAY OTHERWISE BE SPECIFIED ON PLANS OR IN THE SPECIAL PROVISIONS, ALL MATERIAL AND WORKMANSHIP SHALL BE IN ACCORDANCE WITH THE 2012 "STANDARD SPECIFICATIONS FOR ROADS AND STRUCTURES" OF THE N. C. DEPARTMENT OF TRANSPORTATION.

STEEL SHEET PILING FOR PERMANENT OR TEMPORARY APPLICATIONS SHALL BE HOT ROLLED.

CONCRETE:

UNLESS OTHERWISE REQUIRED ON PLANS, CLASS A CONCRETE SHALL BE USED FOR ALL PORTIONS OF ALL STRUCTURES WITH THE EXCEPTION THAT: CLASS AA CONCRETE SHALL BE USED IN BRIDGE SUPERSTRUCTURES, ABUTMENT BACKWALLS, AND APPROACH SLABS; AND CLASS B CONCRETE SHALL BE USED FOR SLOPE PROTECTION AND RIP RAP.

CONCRETE CHAMFERS:

UNLESS OTHERWISE NOTED ON THE PLANS, ALL EXPOSED CORNERS ON STRUCTURES SHALL BE CHAMFERED 3/4" WITH THE FOLLOWING EXCEPTIONS: TOP CORNERS OF CURBS MAY BE ROUNDED TO 1-1/2" RADIUS WHICH IS BUILT INTO CURB FORMS; CORNERS OF TRANSVERSE FLOOR EXPANSION JOINTS SHALL BE ROUNDED WITH A 1/4" FINISHING TOOL UNLESS OTHERWISE REQUIRED ON PLANS; AND CORNERS OF EXPANSION JOINTS IN THE ROADWAY FACES AND TOPS OF CURBS AND SIDEWALKS SHALL BE ROUNDED TO A 1/4" RADIUS WITH A FINISHING STONE OR TOOL UNLESS OTHERWISE REQUIRED ON PLANS.

DOWELS:

DOWELS WHEN INDICATED ON PLANS AS FOR CULVERT EXTENSIONS, SHALL BE EMBEDDED AT LEAST 12" INTO THE OLD CONCRETE AND GROUTED INTO PLACE WITH 1:2 CEMENT MORTAR.

ALLOWANCE FOR DEAD LOAD DEFLECTION, SETTLEMENT, ETC. IN CASTING SUPERSTRUCTURES:

BRIDGES SHALL BE BUILT ON THE GRADE OR VERTICAL CURVE SHOWN ON PLANS. SLABS, CURBS AND PARAPETS SHALL CONFORM TO THE GRADE OR CURVE.

ALL DIMENSIONS WHICH ARE GIVEN IN SECTION AND ARE AFFECTED BY DEAD LOAD DEFLECTIONS ARE DIMENSIONS AT CENTER LINE OF BEARING UNLESS OTHERWISE NOTED ON PLANS. IN SETTING FORMS FOR STEEL BEAM BRIDGES AND PRESTRESSED CONCRETE GIRDER BRIDGES, ADJUSTMENTS SHALL BE MADE DUE TO THE DEAD LOAD DEFLECTIONS FOR THE ELEVATIONS SHOWN. WHERE BLOCKS ARE SHOWN OVER BEAMS FOR BUILDING UP TO THE SLAB, THE VERTICAL DIMENSIONS OF THE BLOCKS SHALL BE ADJUSTED BETWEEN BEARINGS TO COMPENSATE FOR DEAD LOAD DEFLECTIONS, VERTICAL CURVE ORDINATE, AND ACTUAL BEAM CAMBER. WHERE BOTTOM OF SLAB IS IN LINE WITH BOTTOM OF TOP FLANGES, DEPTH OF SLAB BETWEEN BEARINGS SHALL BE ADJUSTED TO COMPENSATE FOR DEAD LOAD DEFLECTION, VERTICAL CURVE ORDINATE, AND ACTUAL BEAM CAMBER.

IN SETTING FALSEWORK AND FORMS FOR REINFORCED CONCRETE SPANS, AN ALLOWANCE SHALL BE MADE FOR DEAD LOAD DEFLECTIONS, SETTLEMENT OF FALSEWORK, AND PERMANENT CAMBER WHICH SHALL BE PROVIDED FOR IN ADDITION TO THE ELEVATIONS SHOWN. AFTER REMOVAL OF THE FALSEWORK, THE FINISHED STRUCTURES SHALL CONFORM TO THE PROFILE AND ELEVATIONS SHOWN ON THE PLANS AND CONSTRUCTION ELEVATIONS FURNISHED BY THE ENGINEER.

DETAILED DRAWINGS FOR FALSEWORK OR FORMS FOR BRIDGE SUPERSTRUCTURE AND ANY STRUCTURE OR PARTS OF A STRUCTURE AS NOTED ON THE PLANS SHALL BE SUBMITTED TO THE ENGINEER FOR APPROVAL BEFORE CONSTRUCTION OF THE FALSEWORK OR FORMS IS STARTED.

REINFORCING STEEL:

ALL REINFORCING STEEL SHALL BE DEFORMED. DIMENSIONS RELATIVE TO PLACEMENT OF REINFORCING ARE TO CENTERS OF BARS UNLESS OTHERWISE INDICATED IN THE PLANS. DIMENSIONS ON BAR DETAILS ARE TO CENTERS OF BARS OR ARE OUT TO OUT AS INDICATED ON PLANS.

WIRE BAR SUPPORTS SHALL BE PROVIDED FOR REINFORCING STEEL WHERE INDICATED ON THE PLANS. WHEN BAR SUPPORT PIECES ARE PLACED IN CONTINUOUS LINES, THEY SHALL BE SO PLACED THAT THE ENDS OF THE SUPPORTING WIRES SHALL BE LAPPED TO LOCK LEGS ON ADJOINING PIECES.

STRUCTURAL STEEL:

AT THE CONTRACTOR'S OPTION, HE MAY SUBSTITUTE 7/8" Ø SHEAR STUDS FOR THE 3/4" Ø STUDS SPECIFIED ON THE PLANS. THIS SUBSTITUTION SHALL BE MADE AT THE RATE OF 3 - 7/8" Ø STUDS FOR 4 - 3/4" Ø STUDS, AND STUD SPACING CHANGES SHALL BE MADE AS NECESSARY TO PROVIDE THE SAME EQUIVALENT NUMBER OF 7/8" Ø STUDS ALONG THE BEAM AS SHOWN FOR 3/4" Ø STUDS BASED ON THE RATIO OF 3 - 7/8" Ø STUDS FOR 4 - 3/4" Ø STUDS. STUDS OF THE LENGTH SPECIFIED ON THE PLANS MUST BE PROVIDED. THE MAXIMUM SPACING SHALL BE 2'-0".

EXCEPT AT THE INTERIOR SUPPORTS OF CONTINUOUS BEAMS WHERE THE COVER PLATE IS IN CONTACT WITH BEARING PLATE, THE CONTRACTOR MAY, AT HIS OPTION, SUBSTITUTE FOR THE COVER PLATES DESIGNATED ON THE PLANS COVER PLATES OF THE EQUIVALENT AREA PROVIDED THESE PLATES ARE AT LEAST 5/16" IN THICKNESS AND DO NOT EXCEED A WIDTH EQUAL TO THE FLANGE WIDTH LESS 2" OR A THICKNESS EQUAL TO 2 TIMES THE FLANGE THICKNESS. THE SIZE OF FILLET WELDS SHALL CONFORM TO THE REQUIREMENTS OF THE CURRENT ANSI/AASHTO/AWS "BRIDGE WELDING CODE". ELECTROSLAG WELDING WILL NOT BE PERMITTED.

WITH THE SOLE EXCEPTION OF EDGES AT SURFACES WHICH BEAR ON OTHER SURFACES, ALL SHARP EDGES AND ENDS OF SHAPES AND PLATES SHALL BE SLIGHTLY ROUNDED BY SUITABLE MEANS TO A RADIUS OF APPROXIMATELY 1/16 INCH OR EQUIVALENT FLAT SURFACE AT A SUITABLE ANGLE PRIOR TO PAINTING, GALVANIZING, OR METALLIZING.

HANDRAILS AND POSTS:

METAL STANDARDS AND FACES OF THE CONCRETE END POSTS FOR THE METAL RAIL SHALL BE SET NORMAL TO THE GRADE OF THE CURB, UNLESS OTHERWISE SHOWN ON PLANS. THE METAL RAIL AND TOPS OF CONCRETE POSTS USED WITH THE ALUMINUM RAIL SHALL BE BUILT PARALLEL TO THE GRADE OF THE CURB.

METAL HANDRAILS SHALL BE IN ACCORDANCE WITH THE PLANS. RAILS SHALL BE AS MANUFACTURED FOR BRIDGE RAILING. CASTINGS SHALL BE OF A UNIFORM APPEARANCE. FINS AND OTHER DEFORMATIONS RESULTING FROM CASTING OR OTHERWISE SHALL BE REMOVED IN A MANNER SO THAT A UNIFORM COLORING OF THE COMPLETED CASTING SHALL BE OBTAINED. CASTINGS WITH DISCOLORATIONS OR OF NON-UNIFORM COLORING WILL NOT BE ACCEPTED. CERTIFIED MILL REPORTS ARE REQUIRED FOR METAL RAILS AND POSTS.

SPECIAL NOTES:

GENERALLY, IN CASE OF DISCREPANCY, THIS STANDARD SHEET OF NOTES SHALL GOVERN OVER THE SPECIFICATIONS, BUT THE REMAINDER OF THE PLANS SHALL GOVERN OVER NOTES HEREON, AND SPECIAL PROVISIONS SHALL GOVERN OVER ALL. SEE SPECIFICATIONS ARTICLE 105-4.

ENGLISH

JANUARY, 1990