This electronic collection of documents is provided for the convenience of the user and is Not a Certified Document –

The documents contained herein were originally issued and sealed by the individuals whose names and license numbers appear on each page, on the dates appearing with their signature on that page.
This file or an individual page shall not be considered a certified document.

DocuSign Envelope ID: E02611C1-780A-46CF-90AA-7A8565D2C720

PROJECT: 17BP.14.R.135; 17BP.14.R.136

CONTRACT: DN00115

STATE OF NORTH CAROLINA
DIVISION OF HIGHWAYS

TRANSYLVANIA COUNTY

STATE	STATE PROJECT REFERENCE NO.	SHEET NO.	TOTAL SHEETS
N.C.	17BP.14.R.135; 17BP.14.R.136	1	

STATE PROJ. NO.	F. A. PROJ. NO.	DESCRIPTION
45360.1.28	BRZ-1143(8)	PE
45360.2.28	BRZ-1143(8)	ROW, UTL
17BP.14.R.135		CONST.
45360.1.29	BRZ-1143(9)	PE
45360.2.29	BRZ-1143(9)	ROW, UTL
17BP.14.R.136		CONST.

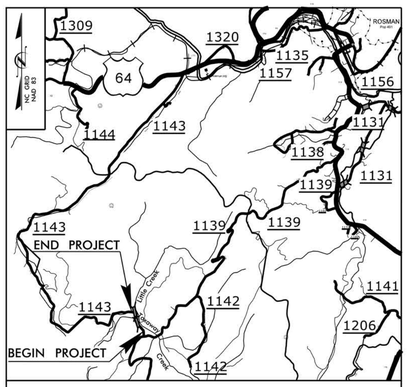

VICINITY MAP

LOCATION: BRIDGE NO. 138 OVER TOXAWAY CREEK AND BRIDGE NO. 205 OVER LITTLE CREEK ON SR 1143 (FROZEN CREEK RD)

TYPE OF WORK: GRADING, DRAINAGE, PAVING, AND STRUCTURE

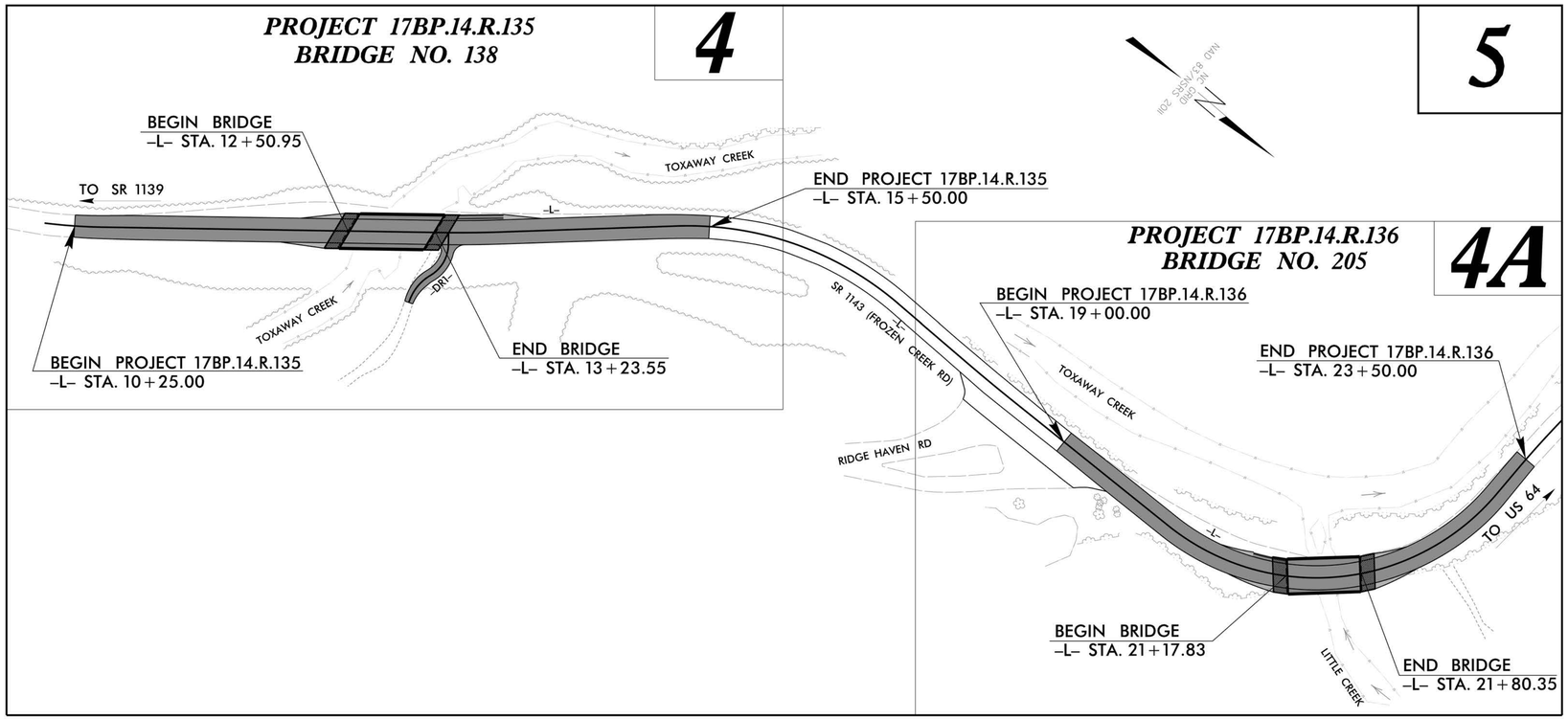

Vaughn & Melton
Consulting Engineers
Asheville, North Carolina
828-253-2796
Raleigh, NC 919-977-9455
Charlotte, NC 704-357-0488
Boone, NC 828-355-9933
Tri-Cities, TN 423-467-8401
Knoxville, TN 865-546-5800
Spartanburg, SC 864-574-4775
Charleston, SC 843-974-5650
Middlesboro, KY 606-248-6600
Atlanta, GA 770-627-3509
Copyright © 2006 Vaughn & Melton, Inc. All Rights Reserved

GRAPHIC SCALES

20 10 0 20 40
PLANS

20 10 0 20 40
PROFILE (HORIZONTAL)

4 2 0 4 8
PROFILE (VERTICAL)

DESIGN DATA

ADT 2010 = 440
ADT 2025 = 880
T = 6%
V = 35 MPH

FUNCT. CLASS = RURAL LOCAL
SUB-REGIONAL TIER

PROJECT LENGTH

LENGTH ROADWAY PROJECT 17BP.14.R.135 = 0.086 MI
LENGTH STRUCTURE PROJECT 17BP.14.R.135 = 0.014 MI
TOTAL LENGTH OF PROJECT 17BP.14.R.135 = 0.100 MI

LENGTH ROADWAY PROJECT 17BP.14.R.136 = 0.074 MI
LENGTH STRUCTURE PROJECT 17BP.14.R.136 = 0.012 MI
TOTAL LENGTH OF PROJECT 17BP.14.R.136 = 0.086 MI

Prepared In the Office of:
VAUGHN & MELTON
1318-F PATTON AVE.
ASHEVILLE NC, 28806
FOR THE NORTH CAROLINA DIVISION OF HIGHWAYS

2012 STANDARD SPECIFICATIONS

RIGHT OF WAY DATE:
SEPTEMBER 10, 2013

LETTING DATE:

HARDY WILLIS, PE
PROJECT ENGINEER

REECE SCHULER, PE
PROJECT DESIGN ENGINEER

NCDOT CONTACT:
JOSH DEYTON, PE
DIVISION 14 BRIDGE PROJECT MANAGER

HYDRAULICS ENGINEER

10/22/2015

DocuSigned by:
Aaron C. Carver
6A6722E39A63452...
P.E.
SIGNATURE:

NORTH CAROLINA PROFESSIONAL SEAL 030453 ENGINEER AARON C. CARVER

ROADWAY DESIGN ENGINEER

DocuSigned by:
Reece M. Schuler
166340240C7824FC...
P.E.
SIGNATURE:

NORTH CAROLINA PROFESSIONAL SEAL 26960 ENGINEER REECE M. SCHULER

10/22/2015

DIVISION OF HIGHWAYS STATE OF NORTH CAROLINA

STATE OF NORTH CAROLINA DEPARTMENT OF TRANSPORTATION

PROJECT REFERENCE NO.	SHEET NO.
17BP.14.R.135; 17BP.14.R.136	1-A

ROADWAY DESIGN ENGINEER

NORTH CAROLINA PROFESSIONAL SEAL 26960 ENGINEER REECE M. SCHULER

DocuSigned by: Reece M. Schuler 16634024C7824FC... 11/13/2015

INDEX OF SHEETS

SHEET NUMBER	SHEET
1	TITLE SHEET
1-A	INDEX OF SHEETS, GENERAL NOTES, AND LIST OF STANDARD DRAWINGS
1-B	CONVENTIONAL SYMBOLS
1-C	SURVEY CONTROL SHEET
2 THRU 2-A	PAVEMENT SCHEDULE, TYPICAL SECTIONS, AND WEDGING DETAILS
3-A	SUMMARY OF DRAINAGE QUANTITIES, SUMMARY OF GUARDRAIL, AND ASPHALT PAVEMENT REMOVAL SUMMARY
3-B	EARTHWORK SUMMARY
4 THRU 4-A	PLAN AND PROFILE SHEET
5	RIGHT OF WAY PLAN SHEET
TMP-1 THRU TMP-4	TRAFFIC MANAGEMENT PLANS
SIG-1	SIGNAL PLAN
PM-1	PAVEMENT MARKING PLAN
EC-1 THRU EC-6	EROSION CONTROL PLANS
UO-1 THRU UO-2	UTILITIES BY OTHERS PLANS
X-0	CROSS-SECTION SUMMARY
X-1 THRU X-20	CROSS-SECTIONS
S-1 THRU S-25	STRUCTURE PLANS (17BP.14.R.135)
S-26 THRU S-46	STRUCTURE PLANS (17BP.14.R.136)
RW-1 THRU RW-4	RETAINING WALL PLANS

GENERAL NOTES:

2012 SPECIFICATIONS
EFFECTIVE: 01-17-12

GRADE LINE:
GRADING AND SURFACING OR RESURFACING AND WIDENING:

THE GRADE LINES SHOWN DENOTE THE FINISHED ELEVATION OF THE PROPOSED SURFACING AT GRADE POINTS SHOWN ON THE TYPICAL SECTIONS. WHERE NO GRADE LINES ARE SHOWN, THE PROFILES SHOWN DENOTE THE TOP ELEVATION OF THE EXISTING PAVEMENT ALONG THE CENTER LINE OF SURVEY ON WHICH THE PROPOSED RESURFACING WILL BE PLACED. GRADE LINES MAY BE ADJUSTED BY THE ENGINEER IN ORDER TO SECURE A PROPER TIE-IN.

CLEARING:

CLEARING ON THIS PROJECT SHALL BE PERFORMED TO THE LIMITS ESTABLISHED BY METHOD II.

SUPERELEVATION:

ALL CURVES ON THIS PROJECT SHALL BE SUPERELEVATED IN ACCORDANCE WITH STD. NO. 225.04 USING THE RATE OF SUPERELEVATION AND RUNOFF SHOWN ON THE PLANS. SUPERELEVATION IS TO BE REVOLVED ABOUT THE GRADE POINTS SHOWN ON THE TYPICAL SECTIONS.

SHOULDER CONSTRUCTION:

ASPHALT, EARTH, AND CONCRETE SHOULDER CONSTRUCTION ON THE HIGH SIDE OF SUPERELEVATED CURVES SHALL BE IN ACCORDANCE WITH STD. NO. 560.01.

UNDERDRAINS:

UNDERDRAINS SHALL BE CONSTRUCTED IN ACCORDANCE WITH STD. NO. 815.03 AT LOCATIONS DIRECTED BY THE ENGINEER.

GUARDRAIL:

THE GUARDRAIL LOCATIONS SHOWN ON THE PLANS MAY BE ADJUSTED DURING CONSTRUCTION AS DIRECTED BY THE ENGINEER. THE CONTRACTOR SHOULD CONSULT WITH THE ENGINEER PRIOR TO ORDERING GUARDRAIL MATERIAL.

TEMPORARY SHORING:

SHORING REQUIRED FOR THE MAINTENANCE OF TRAFFIC NOT SHOWN ON THE PLANS WILL BE PAID FOR AT THE CONTRACT PRICE FOR "TEMPORARY SHORING" OR "TEMPORARY SHORING-BARRIER SUPPORTED" DEPENDING UPON THE LOCATION OF THE SHORING.

SUBSURFACE PLANS:

SUBSURFACE PLANS ARE AVAILABLE ON THIS PROJECT. COPIES MAY BE OBTAINED UPON REQUEST.

END BENTS:

THE ENGINEER SHALL CHECK THE STRUCTURE END BENT PLANS, DETAILS, AND CROSS-SECTION PRIOR TO SETTING OF THE SLOPE STAKES FOR THE EMBANKMENT OR EXCAVATION APPROACHING A BRIDGE.

UTILITIES:

UTILITY OWNERS ON THIS PROJECT ARE: HAYWOOD EMC AND COMPORIUM

RIGHT-OF-WAY MARKERS:

ALL RIGHT-OF-WAY MARKERS ON THIS PROJECT SHALL BE PLACED BY CONTRACT IN ACCORDANCE WITH SECTION 801 OF THE 2012 NORTH CAROLINA STANDARD SPECIFICATIONS FOR ROADS AND STRUCTURES.

2012 ROADWAY ENGLISH STANDARD DRAWINGS

The following Roadway Standards as appear in "Roadway Standard Drawings" Highway Design Branch - N. C. Department of Transportation - Raleigh, N. C., Dated January 17, 2012 are applicable to this project and by reference hereby are considered a part of these plans:

STD.NO.	TITLE
DIVISION 2 - EARTHWORK	
200.02	Method of Clearing - Method II
225.02	Guide for Grading Subgrade - Secondary and Local
225.04	Method of Obtaining Superelevation - Two Lane Pavement
DIVISION 3 - PIPE CULVERTS	
300.01	Method of Pipe Installation - Method 'A'
DIVISION 4 - MAJOR STRUCTURES	
422.11	Bridge Approach Fills
DIVISION 5 - SUBGRADE, BASES AND SHOULDERS	
560.01	Method of Shoulder Construction - High Side of Superelevated Curve - Method I
DIVISION 8 - INCIDENTALS	
806.01	Concrete Right of Way Marker
815.03	Pipe Underdrain and Blind Drain
840.14	Concrete Drop Inlet 12" thru 30" Pipe
840.16	Drop Inlet Frame and Grates
840.25	Anchorage for Frames
840.29	Frames and Narrow Slot Flat Grates
840.35	Traffic Bearing Grated Drop Inlet - for Cast Iron Double Frame and Grates
840.46	Traffic Bearing Precast Drainage Structure
840.66	Drainage Structure Steps
846.04	Drop Inlet Installation in Shoulder Berm Gutter
862.01	Guardrail Placement
862.02	Guardrail Installation
862.03	Structure Anchor Units
876.02	Guide for Rip Rap at Pipe Outlets

$$$$SYSTIME$$$$ $$$$DGN$$$$ $$$$USERNAME$$$$

04/06/15

PROJECT REFERENCE NO.	SHEET NO.
17BP.14.R.J35; 17BP.14.R.J36	1-B

STATE OF NORTH CAROLINA, DIVISION OF HIGHWAYS

CONVENTIONAL PLAN SHEET SYMBOLS

Note: Not to Scale **S.U.E. = Subsurface Utility Engineering*

BOUNDARIES AND PROPERTY:

- State Line
- County Line
- Township Line
- City Line
- Reservation Line
- Property Line
- Existing Iron Pin — EIP
- Property Corner
- Property Monument — ECM
- Parcel/Sequence Number — 123
- Existing Fence Line
- Proposed Woven Wire Fence
- Proposed Chain Link Fence
- Proposed Barbed Wire Fence
- Existing Wetland Boundary — WLB
- Proposed Wetland Boundary — WLB
- Existing Endangered Animal Boundary — EAB
- Existing Endangered Plant Boundary — EPB
- Existing Historic Property Boundary — HPB
- Known Contamination Area: Soil
- Potential Contamination Area: Soil
- Known Contamination Area: Water
- Potential Contamination Area: Water
- Contaminated Site: Known or Potential

BUILDINGS AND OTHER CULTURE:

- Gas Pump Vent or U/G Tank Cap
- Sign — S
- Well — W
- Small Mine
- Foundation
- Area Outline
- Cemetery
- Building
- School
- Church
- Dam

HYDROLOGY:

- Stream or Body of Water
- Hydro, Pool or Reservoir
- Jurisdictional Stream — JS
- Buffer Zone 1 — BZ 1
- Buffer Zone 2 — BZ 2
- Flow Arrow
- Disappearing Stream
- Spring
- Wetland
- Proposed Lateral, Tail, Head Ditch — FLOW
- False Sump

RAILROADS:

- Standard Gauge — CSX TRANSPORTATION
- RR Signal Milepost — MILEPOST 35
- Switch — SWITCH
- RR Abandoned
- RR Dismantled

RIGHT OF WAY:

- Baseline Control Point
- Existing Right of Way Marker
- Existing Right of Way Line
- Proposed Right of Way Line — RW
- Proposed Right of Way Line with Iron Pin and Cap Marker — RW
- Proposed Right of Way Line with Concrete or Granite R/W Marker — RW
- Proposed Control of Access Line with Concrete C/A Marker — CA
- Existing Control of Access — CA
- Proposed Control of Access — CA
- Existing Easement Line — E
- Proposed Temporary Construction Easement — E
- Proposed Temporary Drainage Easement — TDE
- Proposed Permanent Drainage Easement — PDE
- Proposed Permanent Drainage / Utility Easement — DUE
- Proposed Permanent Utility Easement — PUE
- Proposed Temporary Utility Easement — TUE
- Proposed Aerial Utility Easement — AUE
- Proposed Permanent Easement with Iron Pin and Cap Marker

ROADS AND RELATED FEATURES:

- Existing Edge of Pavement
- Existing Curb
- Proposed Slope Stakes Cut — C
- Proposed Slope Stakes Fill — F
- Proposed Curb Ramp — CR
- Existing Metal Guardrail
- Proposed Guardrail
- Existing Cable Guiderail
- Proposed Cable Guiderail
- Equality Symbol
- Pavement Removal

VEGETATION:

- Single Tree
- Single Shrub
- Hedge
- Woods Line
- Orchard
- Vineyard — Vineyard

EXISTING STRUCTURES:

MAJOR:

- Bridge, Tunnel or Box Culvert — CONC
- Bridge Wing Wall, Head Wall and End Wall — CONC WW

MINOR:

- Head and End Wall — CONC HW
- Pipe Culvert
- Footbridge
- Drainage Box: Catch Basin, DI or JB — CB
- Paved Ditch Gutter
- Storm Sewer Manhole — S
- Storm Sewer — S

UTILITIES:

POWER:

- Existing Power Pole
- Proposed Power Pole
- Existing Joint Use Pole
- Proposed Joint Use Pole
- Power Manhole — P
- Power Line Tower
- Power Transformer
- U/G Power Cable Hand Hole
- H-Frame Pole
- U/G Power Line LOS B (S.U.E.*) — P
- U/G Power Line LOS C (S.U.E.*) — P
- U/G Power Line LOS D (S.U.E.*) — P

TELEPHONE:

- Existing Telephone Pole
- Proposed Telephone Pole
- Telephone Manhole — T
- Telephone Pedestal — T
- Telephone Cell Tower
- U/G Telephone Cable Hand Hole
- U/G Telephone Cable LOS B (S.U.E.*) — T
- U/G Telephone Cable LOS C (S.U.E.*) — T
- U/G Telephone Cable LOS D (S.U.E.*) — T
- U/G Telephone Conduit LOS B (S.U.E.*) — TC
- U/G Telephone Conduit LOS C (S.U.E.*) — TC
- U/G Telephone Conduit LOS D (S.U.E.*) — TC
- U/G Fiber Optics Cable LOS B (S.U.E.*) — T FO
- U/G Fiber Optics Cable LOS C (S.U.E.*) — T FO
- U/G Fiber Optics Cable LOS D (S.U.E.*) — T FO

WATER:

- Water Manhole — W
- Water Meter
- Water Valve
- Water Hydrant
- U/G Water Line LOS B (S.U.E*) — W
- U/G Water Line LOS C (S.U.E*) — W
- U/G Water Line LOS D (S.U.E*) — W
- Above Ground Water Line — A/G Water

TV:

- TV Pedestal — C
- TV Tower
- U/G TV Cable Hand Hole — HH
- U/G TV Cable LOS B (S.U.E.*) — TV
- U/G TV Cable LOS C (S.U.E.*) — TV
- U/G TV Cable LOS D (S.U.E.*) — TV
- U/G Fiber Optic Cable LOS B (S.U.E.*) — TV FO
- U/G Fiber Optic Cable LOS C (S.U.E.*) — TV FO
- U/G Fiber Optic Cable LOS D (S.U.E.*) — TV FO

GAS:

- Gas Valve
- Gas Meter
- U/G Gas Line LOS B (S.U.E.*) — G
- U/G Gas Line LOS C (S.U.E.*) — G
- U/G Gas Line LOS D (S.U.E.*) — G
- Above Ground Gas Line — A/G Gas

SANITARY SEWER:

- Sanitary Sewer Manhole
- Sanitary Sewer Cleanout
- U/G Sanitary Sewer Line — SS
- Above Ground Sanitary Sewer — A/G Sanitary Sewer
- SS Forced Main Line LOS B (S.U.E.*) — FSS
- SS Forced Main Line LOS C (S.U.E.*) — FSS
- SS Forced Main Line LOS D (S.U.E.*) — FSS

MISCELLANEOUS:

- Utility Pole
- Utility Pole with Base
- Utility Located Object
- Utility Traffic Signal Box — S
- Utility Unknown U/G Line LOS B (S.U.E.*) — ?UTL
- U/G Tank; Water, Gas, Oil
- Underground Storage Tank, Approx. Loc. — UST
- A/G Tank; Water, Gas, Oil
- Geoenvironmental Boring
- U/G Test Hole LOS A (S.U.E.*)
- Abandoned According to Utility Records — AATUR
- End of Information — E.O.I.

PROJECT REFERENCE NO.	SHEET NO.
17BP.14.R.135; 17BP.14.R.136	1-C
Location and Surveys	

SURVEY CONTROL SHEET 17BP.14.R.135; 17BP.14.R.136

BL (BD-5114AB)

POINT	DESC.	NORTH	EAST	ELEVATION	L STATION	OFFSET
1	BL-1	512570.4530	845746.8070	1958.42	10+23.34	11.62 RT
2	BL-2	512791.3460	845550.3860	1944.51	13+18.11	0.06 RT
3	BL-3	513033.7277	845345.2923	1939.82	16+33.22	13.19 LT

BM1 ELEVATION = 1952.93
N 512664 E 845598
BL STATION 6+69.00 49 LEFT
RR SPIKE IN BASE OF 10" CHERRY

BM2 ELEVATION = 1942.32
N 512863 E 845444
BL STATION 9+19.00 34 LEFT
RR SPIKE IN BASE OF GUY POLE

ROW MARKER IRON PIN AND CAP-E

ALIGN	STATION	OFFSET	NORTH	EAST
L	10+25.00	25.00	512579.8024	845756.5315
L	10+25.00	35.00	512585.7668	845764.5581
L	13+78.71	19.13	512850.1400	845524.9526
L	13+78.71	35.00	512860.8369	845536.6700
L	20+65.00	12.96	513471.1009	845341.6951
L	20+73.00	52.00	513492.5019	845375.6415
L	21+85.00	50.00	513603.5157	845291.3781
L	22+14.00	52.00	513625.0305	845261.7629
L	22+29.00	22.57	513606.6415	845232.6850

ROW MARKER PERMANENT EASEMENT-E

ALIGN	STATION	OFFSET	NORTH	EAST
L	10+84.48	35.00	512633.3972	845726.0481
L	12+14.00	55.00	512746.0241	845659.0287
L	13+75.00	-45.00	512804.2796	845479.9702
L	13+75.00	-31.28	512813.4915	845490.1363
L	13+90.00	-45.00	512815.2388	845469.9743
L	13+90.00	-30.25	512825.1826	845480.8667
L	14+27.00	64.00	512916.0541	845525.5285
L	16+89.00	24.99	513095.2221	845370.2711
L	16+89.00	72.00	513100.7796	845416.9542
L	19+75.00	-28.46	513377.3071	845310.9872
L	19+75.00	-45.00	513376.8260	845294.4505
L	19+90.00	-30.30	513392.2471	845308.7053
L	19+90.00	-45.00	513391.8196	845294.0142
L	20+21.00	34.00	513426.8739	845371.7113
L	20+64.00	-37.03	513455.2050	845294.2883
L	23+16.00	-27.23	513575.9542	845138.9735

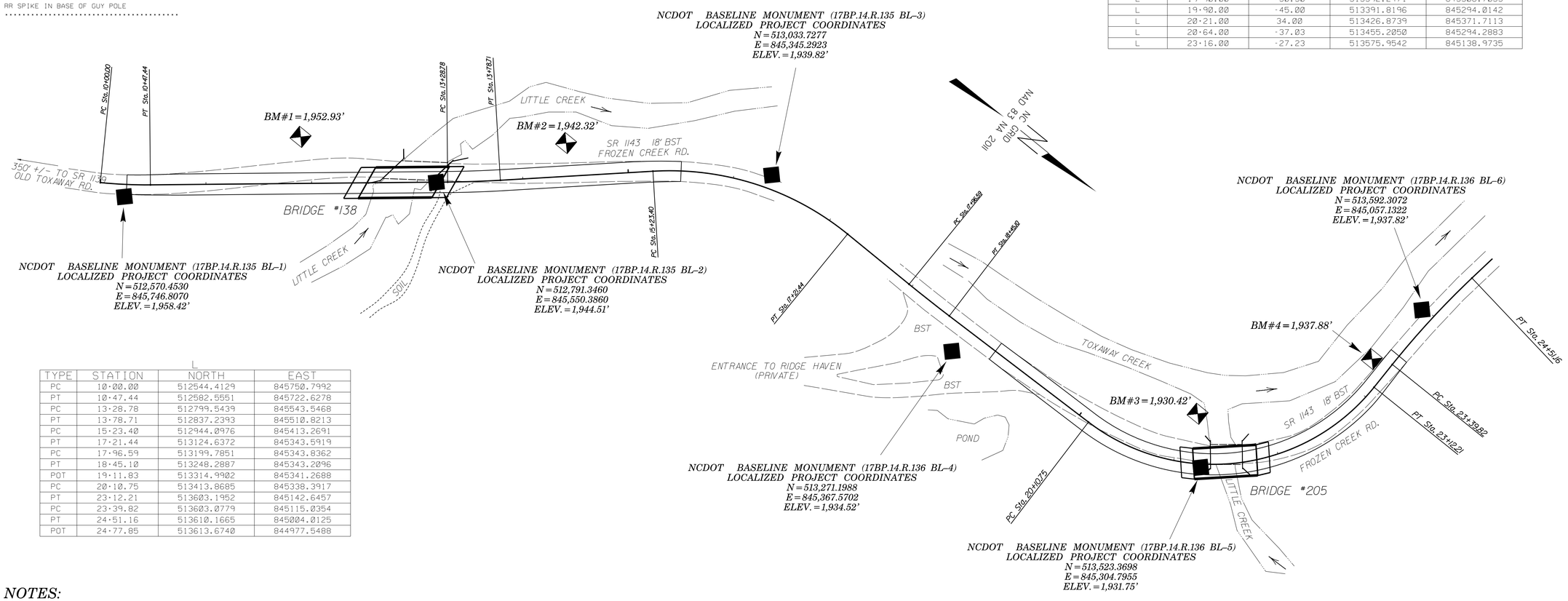

L

TYPE	STATION	NORTH	EAST
PC	10+00.00	512544.4129	845750.7992
PT	10+47.44	512582.5551	845722.6278
PC	13+28.78	512799.5439	845543.5468
PT	13+78.71	512837.2393	845510.8213
PC	15+23.40	512944.0976	845413.2691
PT	17+21.44	513124.6372	845343.5919
PC	17+96.59	513199.7851	845343.8362
PT	18+45.10	513248.2887	845343.2096
POT	19+11.83	513314.9902	845341.2688
PC	20+10.75	513413.8685	845338.3917
PT	23+12.21	513603.1952	845142.6457
PC	23+39.82	513603.0779	845115.0354
PT	24+51.16	513610.1665	845004.0125
POT	24+77.85	513613.6740	844977.5488

BL (BD-5114AC)

POINT	DESC.	NORTH	EAST	ELEVATION	L STATION	OFFSET
4	BL-4	513271.1988	845367.5702	1934.52	18+67.29	25.02 RT
5	BL-5	513523.3698	845304.7955	1931.75	21+25.98	3.22 RT
6	BL-6	513592.3072	845057.1322	1937.82	23+96.94	12.55 LT

BM3 ELEVATION = 1930.42
N 513489 E 845267
BL STATION 7+86.92 42.95' LEFT
RR SPIKE IN BASE OF 12" POPLAR

BM4 ELEVATION = 1937.88
N 513585 E 845123
BL STATION 9+51.28 10.47' RIGHT
RR SPIKE IN BASE OF 15" OAK

NOTES:

1. THE CONTROL DATA FOR THIS PROJECT CAN BE FOUND ELECTRONICALLY BY SELECTING PROJECT CONTROL DATA AT:
   HTTPS://CONNECT.NCDOT.GOV/RESOURCES/LOCATION/

   THE FILES TO BE FOUND ARE AS FOLLOWS:
   BD-5114ABAC_LS_CONTROL_140827.TXT

   SITE CALIBRATION INFORMATION HAS NOT BEEN PROVIDED FOR THIS PROJECT. IF FURTHER INFORMATION IS NEEDED, PLEASE CONTACT THE LOCATION AND SURVEYS UNIT.

◆ INDICATES GEODETIC CONTROL MONUMENTS USED OR SET FOR HORIZONTAL PROJECT CONTROL BY THE NCDOT LOCATION AND SURVEYS UNIT.
PROJECT CONTROL ESTABLISHED USING GLOBAL POSITIONING SYSTEM.
NETWORK ESTABLISHED FROM NGS ONLINE POSITIONING SERVICE (OPUS)

NOTE: DRAWING NOT TO SCALE

DATUM DESCRIPTION

THE LOCALIZED COORDINATE SYSTEM DEVELOPED FOR THIS PROJECT IS BASED ON THE STATE PLANE COORDINATES ESTABLISHED BY NCDOT FOR MONUMENT "870138 BL-1"
WITH NAD 83/NA 2011 STATE PLANE GRID COORDINATES OF
NORTHING: 512570.4530(ft) EASTING: 845746.8070(ft)
ELEVATION: 1958.42(ft)
THE AVERAGE COMBINED GRID FACTOR USED ON THIS PROJECT (GROUND TO GRID) IS: 0.99975560
THE N.C. LAMBERT GRID BEARING AND
LOCALIZED HORIZONTAL GROUND DISTANCE FROM
"870138 BL-1" TO -L- STATION 10+00.00 IS
S 8° 42' 58" E 26.34'
ALL LINEAR DIMENSIONS ARE LOCALIZED HORIZONTAL DISTANCES
VERTICAL DATUM USED IS NAVD 88

6/2/99

2-9-2011 11:46:55 AM

DocuSign Envelope ID: 344C2DB7-760B-40D1-8E9D-9EC73D7F946D

8/17/99

PROJECT REFERENCE NO.	SHEET NO.
17BP.14.R.135	2
R/W SHEET NO.	
ROADWAY DESIGN ENGINEER	PAVEMENT DESIGN ENGINEER

NORTH CAROLINA PROFESSIONAL SEAL 26960 ENGINEER REECE M. SCHULER
DocuSigned by: Reece M. Schuler 9/21/2015
16634024C7824FC...

NORTH CAROLINA PROFESSIONAL SEAL 20134 ENGINEER ROBERT M. CRAIG
DocuSigned by: Robert M. Craig 10/22/2015
56AE951EA2424B2...

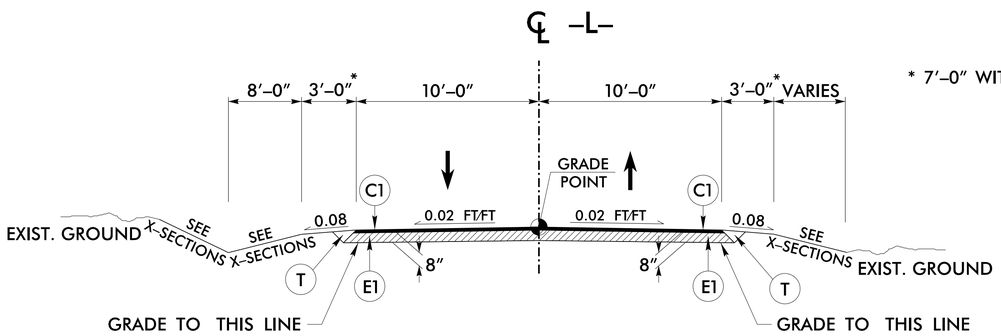

PROJECT 17BP.14.R.135 TYPICAL SECTION NO. 1

USE TYPICAL SECTION NO. 1

–L– STA. 10+25 (BEGIN PROJECT) TO
–L– STA. 12+50.95 (BEGIN BRIDGE)

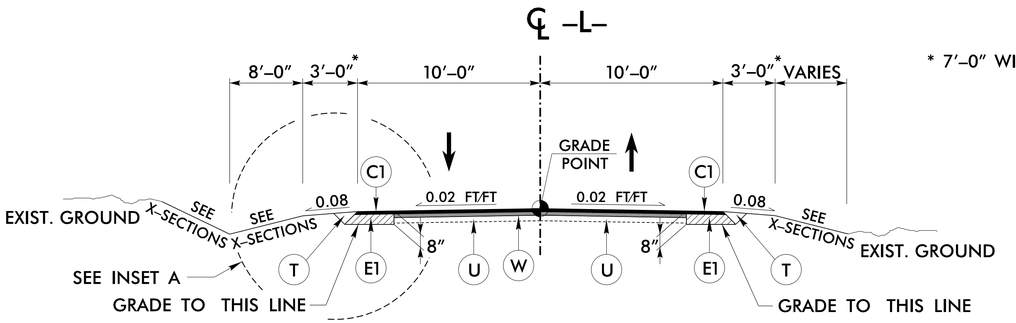

PROJECT 17BP.14.R.135 TYPICAL SECTION NO. 2

USE TYPICAL SECTION NO. 2

–L– STA. 13+23.55 (END BRIDGE) TO
–L– STA. 15+50.00 (END PROJECT)

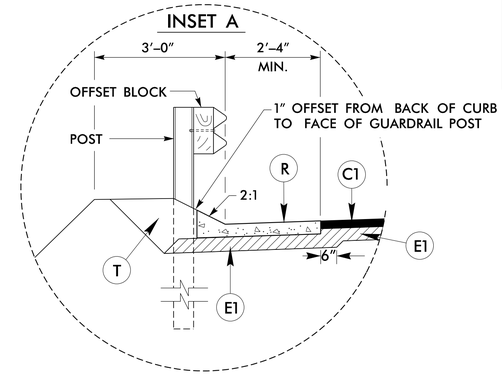

INSET A
END BRIDGE TO –L– STA. 13+80 LT

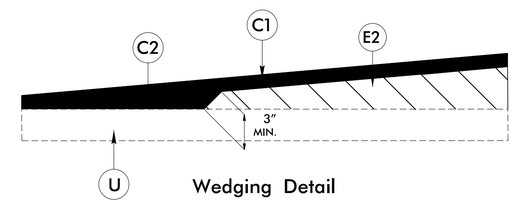

Wedging Detail

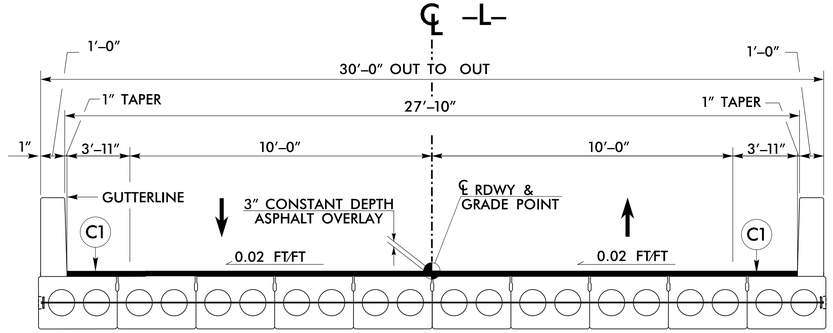

PROJECT 17BP.14.R.135 TYPICAL SECTION NO. 3

USE TYPICAL SECTION NO. 3

–L– STA. 12+50.95 (BEGIN BRIDGE) TO
–L– STA. 13+23.55 (END BRIDGE)

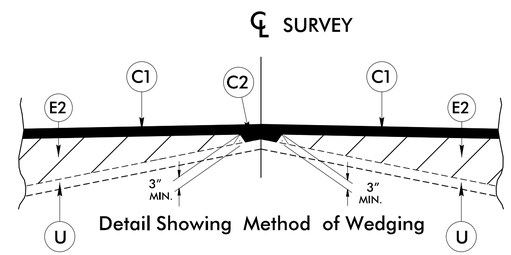

Detail Showing Method of Wedging

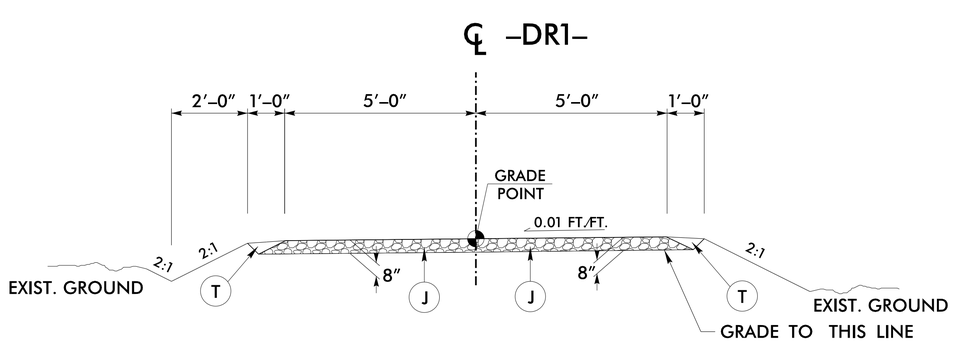

PROJECT 17BP.14.R.135 TYPICAL SECTION NO. 4

USE TYPICAL SECTION NO. 4

–DR1– STA. 10+00.00 TO –DR1– STA. 10+60.02

	PAVEMENT SCHEDULE
C1	PROP. APPROX. 3″ ASPHALT CONCRETE SURFACE COURSE, TYPE S9.5B, AT AN AVERAGE RATE OF 168 LBS. PER SQ. YD. IN EACH OF TWO LAYERS.
C2	PROP. VAR. DEPTH ASPHALT CONCRETE SURFACE COURSE, TYPE S9.5B AT AN AVERAGE RATE OF 112 LBS. PER SQ. YD. PER 1″ DEPTH. TO BE PLACED IN LAYERS NOT TO EXCEED 2″ IN DEPTH.
E1	PROP. APPROX. 5″ ASPHALT CONCRETE BASE COURSE, TYPE B25.0B, AT AN AVERAGE RATE OF 570 LBS. PER SQ. YD.
E2	PROP. VAR. DEPTH ASPHALT CONCRETE BASE COURSE, TYPE B25.0B, AT AN AVERAGE RATE OF 114 LBS. PER SQ. YD. PER 1″ DEPTH. TO BE PLACED IN LAYERS NOT LESS THAN 3″ IN DEPTH OR GREATER THAN 5½″ IN DEPTH.
J	8″ AGGRGRATE BASE COURSE
R	SHOULDER BERM AND GUTTER (NCDOT STD. DWG. NO. 846.01)
T	EARTH MATERIAL
U	EXISTING PAVEMENT
W	PROPOSED WEDGING (SEE APPROPRIATE DETAILS)

NOTE: ALL PAVEMENT SLOPES ARE 1:1 UNLESS SHOWN OTHERWISE.

DOCUMENT NOT CONSIDERED FINAL UNLESS ALL SIGNATURES COMPLETED

DocuSign Envelope ID: 344C2DB7-760B-40D1-8E9D-9EC73D7F946D

8/17/99

PROJECT REFERENCE NO.	SHEET NO.
17BP.14.R.136	2-A
R/W SHEET NO.	
ROADWAY DESIGN ENGINEER	PAVEMENT DESIGN ENGINEER
NORTH CAROLINA PROFESSIONAL SEAL 26960 ENGINEER REECE M. SCHULTZ — Reece M. Schultz — 10/21/2015 — 16634024C7824FC...	NORTH CAROLINA PROFESSIONAL SEAL 20134 ENGINEER ROBERT M. CRISP — RM Crisp — 10/22/2015 — 56AE951EA2424B2...

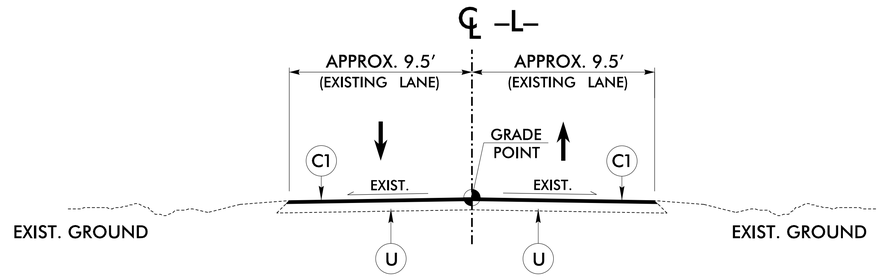

PROJECT 17BP.14.R.136 TYPICAL SECTION NO. 1

USE TYPICAL SECTION NO. 1

–L– STA. 15+50.00 TO 19+00.00

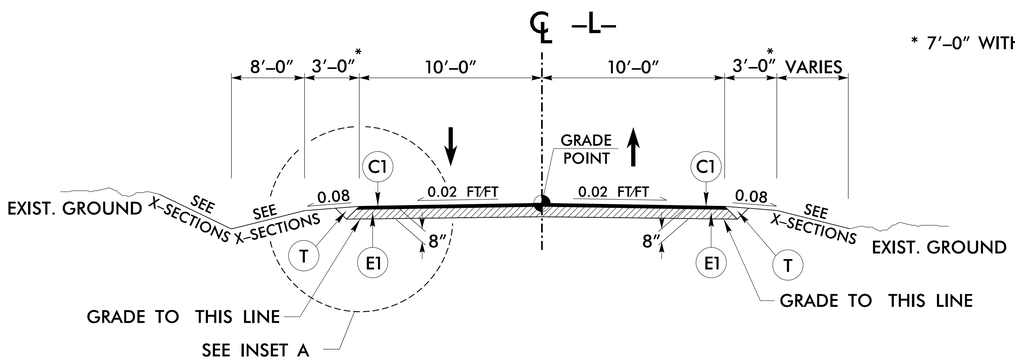

* 7′–0″ WITH GUARDRAIL

PROJECT 17BP.14.R.136 TYPICAL SECTION NO. 2

USE TYPICAL SECTION NO. 2

–L– STA. 19+00.00 TO 21+17.83 (BEGIN BRIDGE)

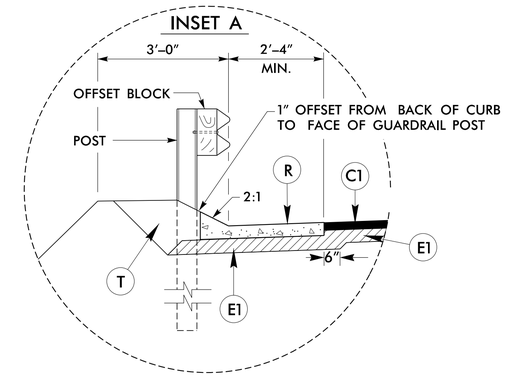

INSET A

–L– STA. 20+94.50 LT TO (BEGIN BRIDGE)

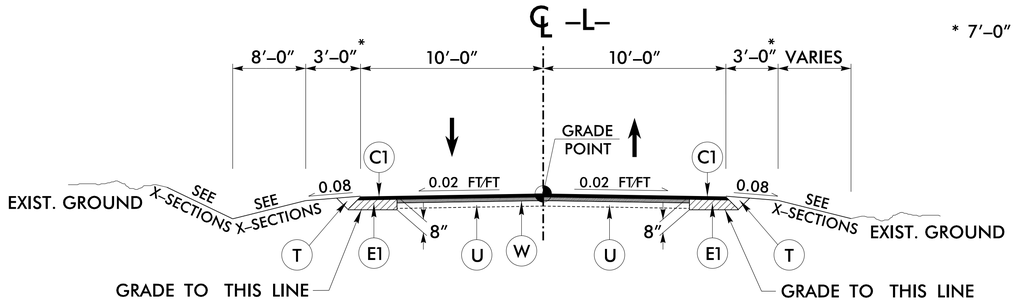

* 7′–0″ WITH GUARDRAIL

PROJECT 17BP.14.R.136 TYPICAL SECTION NO. 3

USE TYPICAL SECTION NO. 3

–L– STA. 21+80.35 (END BRIDGE) TO STA. 23+50 (END PROJECT)

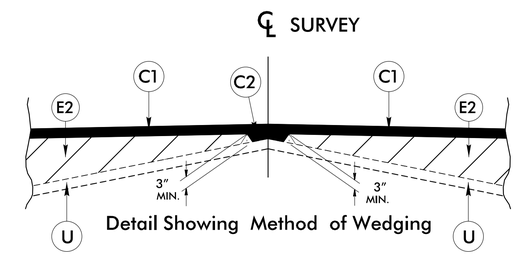

Detail Showing Method of Wedging

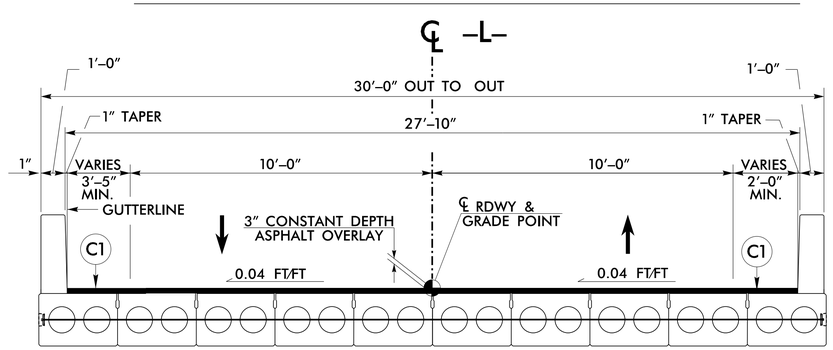

PROJECT 17BP.14.R.136 TYPICAL SECTION NO. 4

USE TYPICAL SECTION NO. 4

–L– STA. 21+17.83 (BEGIN BRIDGE) TO
–L– STA. 21+80.35 (END BRIDGE)

	PAVEMENT SCHEDULE
C1	PROP. APPROX. 3″ ASPHALT CONCRETE SURFACE COURSE, TYPE S9.5B, AT AN AVERAGE RATE OF 168 LBS. PER SQ. YD. IN EACH OF TWO LAYERS.
C2	PROP. VAR. DEPTH ASPHALT CONCRETE SURFACE COURSE, TYPE S9.5B AT AN AVERAGE RATE OF 112 LBS. PER SQ. YD. PER 1″ DEPTH. TO BE PLACED IN LAYERS NOT TO EXCEED 2″ IN DEPTH.
E1	PROP. APPROX. 5″ ASPHALT CONCRETE BASE COURSE, TYPE B25.0B, AT AN AVERAGE RATE OF 570 LBS. PER SQ. YD.
E2	PROP. VAR. DEPTH ASPHALT CONCRETE BASE COURSE, TYPE B25.0B, AT AN AVERAGE RATE OF 114 LBS. PER SQ. YD. PER 1″ DEPTH. TO BE PLACED IN LAYERS NOT LESS THAN 3″ IN DEPTH OR GREATER THAN 5½″ IN DEPTH.
R	SHOULDER BERM AND GUTTER (NCDOT STD. DWG. NO. 846.01)
T	EARTH MATERIAL
U	EXISTING PAVEMENT
W	PROPOSED WEDGING (SEE APPROPRIATE DETAILS)

NOTE: ALL PAVEMENT SLOPES ARE 1:1 UNLESS SHOWN OTHERWISE.

COMPUTED BY: JDD	DATE: 9-8-14	PROJECT REFERENCE NO.	SHEET NO.
CHECKED BY: WCC	DATE: 9-8-14	I7BPJ4.RJ35 I7BPJ4.RJ36	3-A

STATE OF NORTH CAROLINA
DIVISION OF HIGHWAYS

PAVEMENT REMOVAL SUMMARY

LINE	LOCATION	ASPHALT REMOVAL (IN SQUARE YARDS)	ASPHALT BREAK-UP	CONCRETE REMOVAL	CONCRETE REMOVAL
-L-	10+25 TO 12+74	520			
-L-	19+00 TO 21+35	474			
-L-	21+66 TO 21+80	26			
	TOTAL	1020			

Approximate quantities only. Unclassified excavation, borrow excavation, fine grading, clearing and grubbing, and removal of existing pavement will be paid for at the contract lump sum price for "grading".

NOTE: Invert Elevations are for Bid Purposes only and shall not be used for project construction stakeout. See "Standard Specifications For Roads and Structures, Section 300-5".

SUB-REGIONAL & REGIONAL LIST OF PIPES, ENDWALLS, ETC. (FOR PIPES 48" & UNDER)

STATION	LOCATION (LT,RT, OR CL)	STRUCTURE NO. FROM	STRUCTURE NO. TO	TOP ELEVATION	INVERT ELEVATION	INVERT ELEVATION	SLOPE CRITICAL	DRAINAGE PIPE (RCP, CSP, CAAP, HDPE, or PVC) 15"	R.C. PIPE (CLASS III) 24"	MODIFIED CONCRETE FLUME	T.B.D.I. STD. 840.35	T.B.D.I. FRAME WITH TWO GRATES STD. 840.29	REMARKS
-DR1- 10+49	CL	4-1	OUT		1944.3	1939.9		44					
-L- 13+80	LT	4-2		1943.9	1940.8						1	1	
		4-2	OUT		1940.8	1939.8		20					
-L- 19+74	CL	4A-1	OUT		1929.1	1926.7			60				
-L- 20+91		4A-2	OUT							1			
TOTAL								64	60	1	1	1	

ABBREVIATIONS

- C.B. CATCH BASIN
- N.D.I. NARROW DROP INLET
- D.I. DROP INLET
- G.D.I. GRATED DROP INLET
- G.D.I. (N.S.) GRATED DROP INLET (NARROW SLOT)
- J.B. JUNCTION BOX
- M.H. MANHOLE
- T.B.D.I. TRAFFIC BEARING DROP INLET
- T.B.J.B. TRAFFIC BEARING JUNCTION BOX

"N" = DISTANCE FROM EDGE OF LANE TO FACE OF GUARDRAIL.
TOTAL SHOULDER WIDTH = DISTANCE FROM EDGE OF TRAVEL LANE TO SHOULDER BREAK POINT.
FLARE LENGTH = DISTANCE FROM LAST SECTION OF PARALLEL GUARDRAIL TO END OF GUARDRAIL.
W = TOTAL WIDTH OF FLARE FROM BEGINNING OF TAPER TO END OF GUARDRAIL.
G = GATING IMPACT ATTENUATOR TYPE 350
NG = NON-GATING IMPACT ATTENUATOR TYPE 350

GUARDRAIL SUMMARY

SURVEY LINE	BEG. STA.	END STA.	LOCATION	LENGTH STRAIGHT	SHOP CURVED	TEMPORARY	WARRANT POINT APPROACH END	TRAILING END	"N" DIST. FROM E.O.L.	TOTAL SHOUL. WIDTH	FLARE LENGTH APPROACH END	TRAILING END	W APPROACH END	TRAILING END	ANCHORS XI MOD	XI	GRAU 350	GRAU 350 TL-2	IA-350 TL-2	TYPE III	TYPE III SHOP CURVED	B-77	AT-1	IMPACT ATTENUATOR TYPE 350 EA	G	NG	SINGLE FACED GUARDRAIL	REMOVE AND RESET EXISTING GUARDRAIL	REMOVE AND STOCKPILE EXISTING GUARDRAIL	REMARKS
-L-	12+00.24	12+60.46	LT	56.25				12+60.46	4	7	25		0.5					1		1										
-L-	11+84.17	12+44.39	RT	56.25			11+84.17		4	7		25		0.5				1		1										
-L-	13+30.29	13+91.16	LT	56.25			13+30.29		4	7		25		0.5				1		1										
-L-	13+14.20	13+76.20	RT	12.5				13+26.20	4	7	25			0.5					1											
-L-	12+25	13+50				125																						125		
-L-	20+70.84	21+16.74	LT	37.5	18.75			21+16.74	3.3	7	25		0.5					1			1									
-L-	20+65.24	21+21.01	RT	37.5	18.75		20+65.24		4.5	7		25		0.5				1			1									
-L-	21+81.44	23+49.91	LT	137.5	18.75		21+81.44		3.3	7		25		0.5				1			1									
-L-	21+77.16	22+32.82	RT	37.5	18.75			22+32.82	4	7	25		0.5					1			1									
-L-	21+00	22+00				100																						100		
			SUBTOTAL	431.25		225												7	1	3	4									
		LESS DEDUCTIONS FOR ANCHORS																												
		GRAU-350 TL-2 7 @ 25' =		-175																										
		TYPE III 3 @ 18.75' =		-56.25																										
		IA-350 1 @ 12.5' =		-12.5																										
		GRAU-350 TL-2 (TEMP.) 4 @ 25' =				-100																								
		TYPE III (SHOP CURVED) 4 @ 18.75' =			-75																									
			PROJECT TOTALS:	187.5		125																						225		
		ADDITIONAL GUARDRAIL POSTS=5 EA.																												

6/21/00

COMPUTED BY: JDD	DATE: 9-8-14
CHECKED BY: WCC	DATE: 9-8-14

PROJECT REFERENCE NO.	SHEET NO.
17BP.14.R.135; 17BP.14.R.136	3-B

DIVISION OF HIGHWAYS
STATE OF NORTH CAROLINA

SUMMARY OF EARTHWORK

IN CUBIC YARDS

PROJECT NO. 17BP.14.R.135

LOCATION	UNCLASSIFIED EXCAVATION	UNDERCUT	EMBT + %	BORROW	WASTE
SUMMARY NO. 1					
-L- STA. 10 + 50 TO STA. 12 + 50.95 (BEGIN BRIDGE)	420		52		368
SUBTOTAL SUMMARY NO. 1	420		52		368
SUMMARY NO. 2					
-L- STA. 13 + 23.55 (END BRIDGE) TO STA. 15 + 50	44		78	34	
SUBTOTAL SUMMARY NO. 2	44		78	34	
SUMMARY NO. 3					
-DR1- STA. 10 + 00 TO STA. 10 + 60.02	403		6		397
SUBTOTAL SUMMARY NO. 3					
PROJECT 17BP.14.R.135 SUBTOTAL	867		136	34	765
WASTE IN LIEU OF BORROW				-34	-34
PROJECT 17BP.14.R.135 GRAND TOTAL	867		136		731
SAY	870				

PROJECT NO. 17BP.14.R.135
CONTINGENCY ITEMS:
INCIDENTAL STONE = 50 TONS
UNDERCUT EXCAVATION = 50 CY
SELECT GRANULAR MATERIAL = 50 CY
CLASS IV SUBGRADE STABILIZATION = 50 TONS
GEOTEXTILE FOR SOIL STABILIZATION = 50 SY

PROJECT NO. 17BP.14.R.136

SUMMARY NO. 1					
-L- STA. 19 + 00 TO STA. 21 + 17.83 (BEGIN BRIDGE)	148		147		1
SUBTOTAL SUMMARY NO. 1	148		147		1
SUMMARY NO. 2					
-L- STA. 21 + 80.35 (END BRIDGE) TO STA. 23 + 50	1		200	199	
SUBTOTAL SUMMARY NO. 2	1		200	199	
PROJECT 17BP.14.R.136 SUBTOTAL	149		347	199	1
WASTE IN LIEU OF BORROW				-1	-1
PROJECT 17BP.14.R.136 GRAND TOTAL	149		347	198	
SAY	150			200	

PROJECT NO. 17BP.14.R.136
CONTINGENCY ITEMS:
INCIDENTAL STONE = 50 TONS
UNDERCUT EXCAVATION = 50 CY
SELECT GRANULAR MATERIAL = 50 CY
CLASS IV SUBGRADE STABILIZATION = 50 TONS
GEOTEXTILE FOR SOIL STABILIZATION = 50 SY

17BP.14.R.135/17BP.14.R.136 SUBTOTAL	1020		483	200	731
WASTE IN LIEU OF BORROW				-200	-200
17BP.14.R.135/17BP.14.R.136 SUBTOTAL	1020		483		531
SAY	1025				

Approximate quantities only. Unclassified excavation, borrow excavation, fine grading, clearing and grubbing, and removal of existing pavement will be paid for at the contract lump sum price for "grading".

DocuSign Envelope ID: 79E2298C-1442-4938-944F-C5D29D719C15

PROJECT REFERENCE NO.	SHEET NO.
17BP.14.R.135; 17BP.14.R.136	4
R/W SHEET NO.	
ROADWAY DESIGN ENGINEER	HYDRAULICS ENGINEER
NORTH CAROLINA PROFESSIONAL SEAL 26960 ENGINEER REECE M. SCHULER DocuSigned by: Reece M. Schuler 16634024C7824FC... 11/13/2015	NORTH CAROLINA PROFESSIONAL SEAL 030453 ENGINEER AARON C. CARVER DocuSigned by: Aaron C. Carver 4A0F7A6A6A6A4A6... 11/13/2015

8/17/99

REVISIONS

1/31/14 ADDED TCE STA 22+60 RT

SYSTIME$$$$
CSDLNAME$$$$
CSDLDN$$$$

SEE 17BP.14.R.135
SHEET 4 FOR
DESIGN

NAD 83/NSRS 2011
NC GRID

END 17BP.14.R.135 R/W
BEGIN 17BP.14.R.136 R/W
-L- STA 16+89.00

SEE 17BP.14.R.136
SHEET 4-A FOR
DESIGN

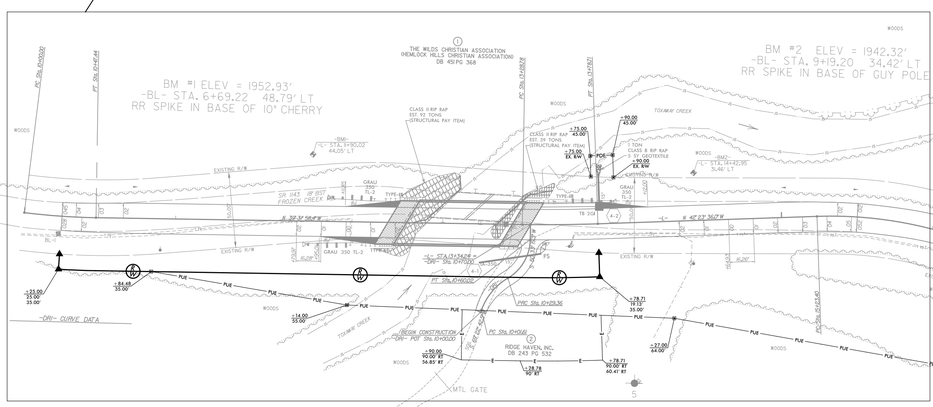

BRIDGE #138

END 17BP.14.R.135 R/W
BEGIN 17BP.14.R.136 R/W
-L- STA 16+89.00

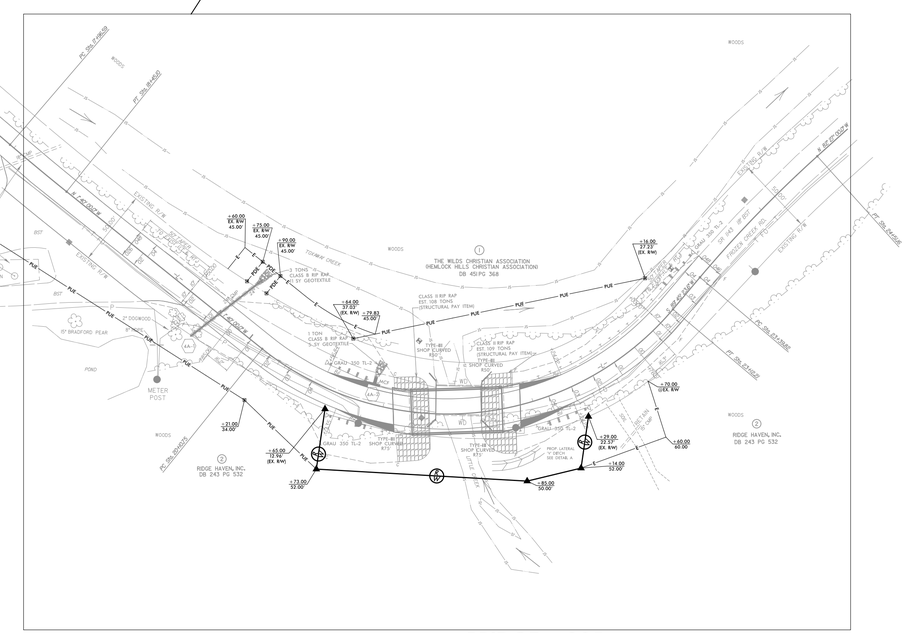

BRIDGE #205

RIGHT OF WAY PLAN FOR PROJECTS 17BP.14.R.135 AND 17BP.14.R.136

NOTE: THIS PLAN SHEET IS FOR RIGHT OF WAY PURPOSES ONLY. SEE 17BP.14.R.135 SHEET 4 & 17BP.14.R.136 SHEET 4-A FOR DESIGN DATA.

DocuSign Envelope ID: 79E2298C-1442-4938-944F-C5D29D719C15

PROJECT REFERENCE NO.	SHEET NO.
17BP.14.R.135	5
R/W SHEET NO.	

ROADWAY DESIGN ENGINEER: NORTH CAROLINA PROFESSIONAL SEAL 26960 ENGINEER REECE M. SCHULER — Docusigned by: Reece M. Schuler 16634024C7824FC... 11/13/2015

HYDRAULICS ENGINEER: NORTH CAROLINA PROFESSIONAL SEAL 030653 ENGINEER AARON C. CARVER — Docusigned by: Aaron C. Carver 1A5A0A0A0A0A4A0... 11/13/2015

V&M Vaughn & Melton Consulting Engineers
Asheville, North Carolina 828-253-2796
Charlotte, North Carolina 704-357-0488
Tri-Cities, Tennessee 423-467-8401
Knoxville, Tennessee 865-546-5600
Middlesboro, Kentucky 606-248-6600
Spartanburg, South Carolina 864-574-4775
Copyright © 2006 Vaughn & Melton, Inc. All Rights Reserved

SBG END APPR. SLAB LT TO -L- STA. 13+80

BL-1	512570.4530	845746.8070	1958.42
BL-2	512791.3460	845550.3860	1944.51
BL-3	513033.7277	845345.2923	1939.82

DATUM DESCRIPTION

THE LOCALIZED COORDINATE SYSTEM DEVELOPED FOR THIS PROJECT IS BASED ON THE STATE PLANE COORDINATES ESTABLISHED BY NCDOT FOR MONUMENT "870138 BL-1"
WITH NAD 83/NSRS 2007 STATE PLANE GRID COORDINATES OF
NORTHING: 512570.4530(ft) EASTING: 845746.8070(ft)
ELEVATION: 1958.42(ft)
THE AVERAGE COMBINED GRID FACTOR USED ON THIS PROJECT (GROUND TO GRID) IS: 0.99975560
THE N.C. LAMBERT GRID BEARING AND LOCALIZED HORIZONTAL GROUND DISTANCE FROM "870138 BL-1" TO -L- STATION 10+00.00 IS
S 08° 42' 58" E - 26.34'
ALL LINEAR DIMENSIONS ARE LOCALIZED HORIZONTAL DISTANCES
VERTICAL DATUM USED IS NAVD 88

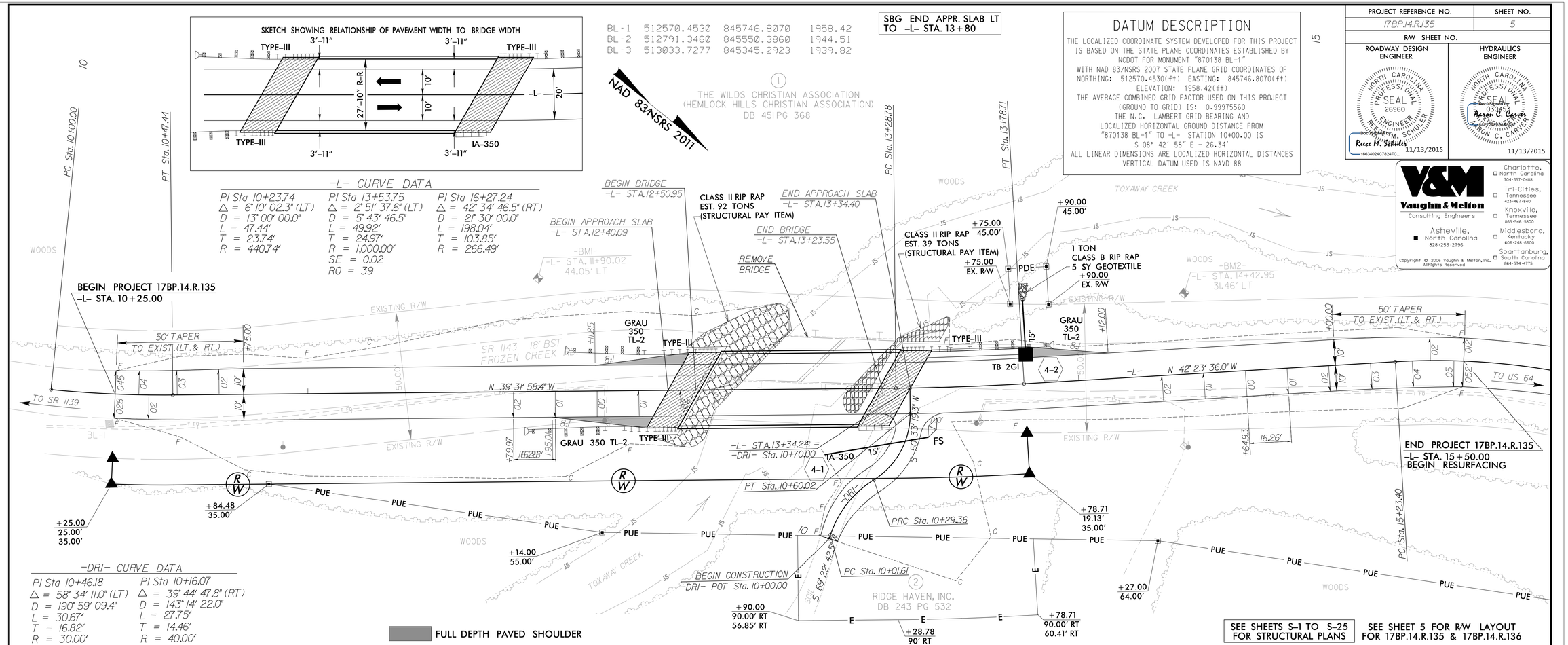

SEE SHEETS S-1 TO S-25 FOR STRUCTURAL PLANS

SEE SHEET 5 FOR R/W LAYOUT FOR 17BP.14.R.135 & 17BP.14.R.136

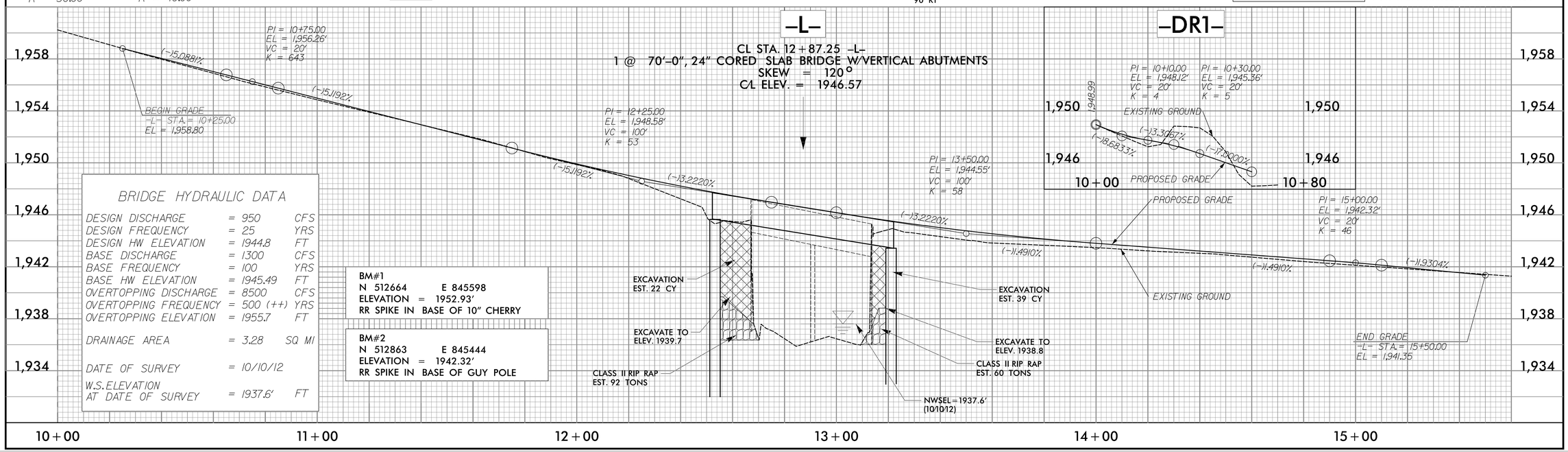

BRIDGE HYDRAULIC DATA

DESIGN DISCHARGE	= 950	CFS
DESIGN FREQUENCY	= 25	YRS
DESIGN HW ELEVATION	= 1944.8	FT
BASE DISCHARGE	= 1300	CFS
BASE FREQUENCY	= 100	YRS
BASE HW ELEVATION	= 1945.49	FT
OVERTOPPING DISCHARGE	= 8500	CFS
OVERTOPPING FREQUENCY	= 500 (++)	YRS
OVERTOPPING ELEVATION	= 1955.7	FT
DRAINAGE AREA	= 3.28	SQ MI
DATE OF SURVEY	= 10/10/12	
W.S.ELEVATION AT DATE OF SURVEY	= 1937.6'	FT

BM#1
N 512664 E 845598
ELEVATION = 1952.93'
RR SPIKE IN BASE OF 10" CHERRY

BM#2
N 512863 E 845444
ELEVATION = 1942.32'
RR SPIKE IN BASE OF GUY POLE

DocuSign Envelope ID: 79E2298C-1442-4938-944F-C5D29D719C15

PROJECT REFERENCE NO.	SHEET NO.
17BP.14.R.136	6
R/W SHEET NO.	

ROADWAY DESIGN ENGINEER: NORTH CAROLINA PROFESSIONAL SEAL 26960 ENGINEER RECE M. SCHULER — DocuSigned by: Reece M. Schuler — 11/13/2015

HYDRAULICS ENGINEER: NORTH CAROLINA PROFESSIONAL SEAL 030453 ENGINEER AARON C. CARVER — DocuSigned by: Aaron C. Carver — 11/13/2015

V&M Vaughn & Melton Consulting Engineers
Asheville, North Carolina 828-253-2796
Charlotte, North Carolina 704-357-0488
Tri-Cities, Tennessee 423-467-8401
Knoxville, Tennessee 865-546-5800
Middlesboro, Kentucky 606-248-6600
Spartanburg, South Carolina 864-574-4775
Copyright © 2006 Vaughn & Melton, Inc. All Rights Reserved

SEE SHEETS S-22 TO S-46 FOR STRUCTURAL PLANS

REVISIONS

1/3/14 ADDED TCE STA 22+60 RT

BEGIN PROJECT 17BP.14.R.136
-L- STA. 19+00.00

END RESURFACING
-L- STA. 19+00.00

SBG -L- 20+94.50 LT. TO BEGIN APPR. SLAB

NAD 83/NSRS 2011

END PROJECT 17BP.14.R.136
-L- STA. 23+50.00

BL-4	513271.1988	845367.5702	1934.52	
BL-5	513523.3698	845304.7955	1931.75	
BL-6	513592.3072	845057.1322	1937.82	

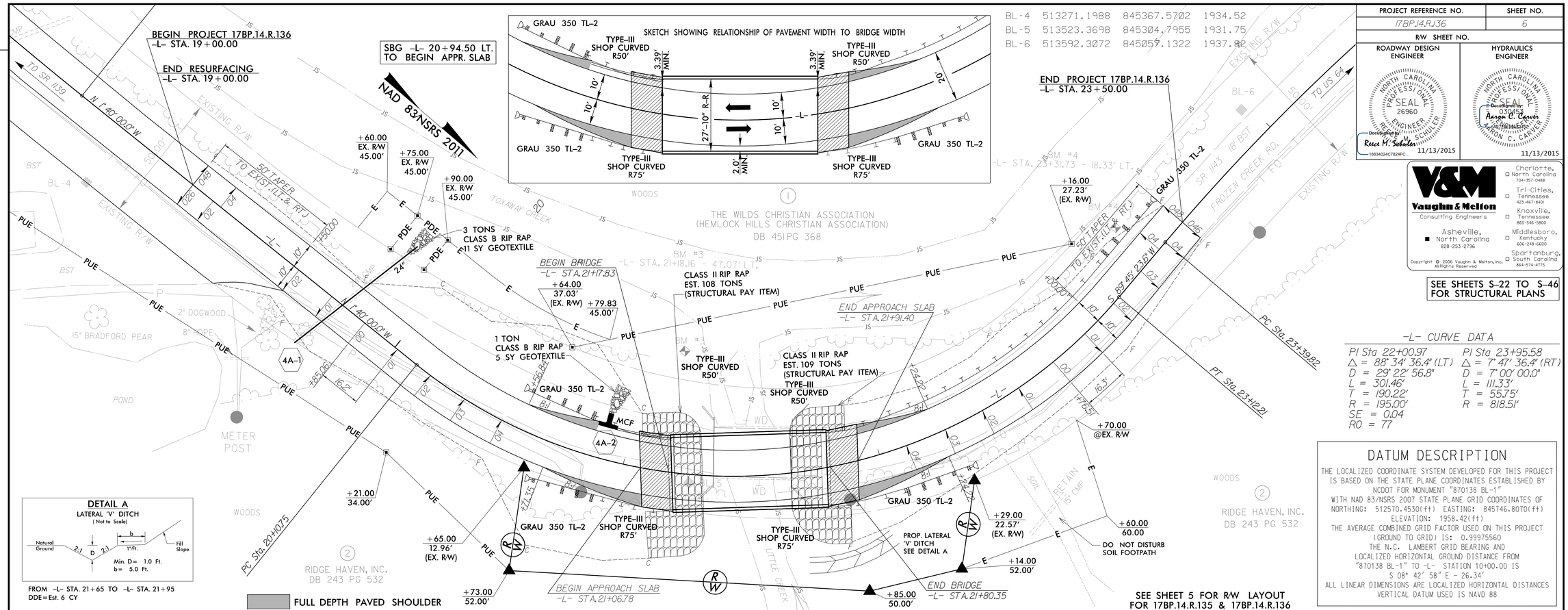

DETAIL A
LATERAL 'V' DITCH
(Not to Scale)

FROM -L- STA. 21+65 TO -L- STA. 21+95
DDE=Est. 6 CY

-L- CURVE DATA

PI Sta 22+00.97	PI Sta 23+95.58
Δ = 88° 34' 36.4" (LT)	Δ = 7° 47' 36.4" (RT)
D = 29° 22' 56.8"	D = 7° 00' 00.0"
L = 301.46'	L = 111.33'
T = 190.22'	T = 55.75'
R = 195.00'	R = 818.51'
SE = 0.04	
RO = 77	

DATUM DESCRIPTION

THE LOCALIZED COORDINATE SYSTEM DEVELOPED FOR THIS PROJECT IS BASED ON THE STATE PLANE COORDINATES ESTABLISHED BY NCDOT FOR MONUMENT "870138 BL-1"
WITH NAD 83/NSRS 2007 STATE PLANE GRID COORDINATES OF NORTHING: 512570.4530(ft) EASTING: 845746.8070(ft)
ELEVATION: 1958.42(ft)
THE AVERAGE COMBINED GRID FACTOR USED ON THIS PROJECT (GROUND TO GRID) IS: 0.99975560
THE N.C. LAMBERT GRID BEARING AND LOCALIZED HORIZONTAL GROUND DISTANCE FROM "870138 BL-1" TO -L- STATION 10+00.00 IS S 08° 42' 58" E - 26.34'
ALL LINEAR DIMENSIONS ARE LOCALIZED HORIZONTAL DISTANCES
VERTICAL DATUM USED IS NAVD 88

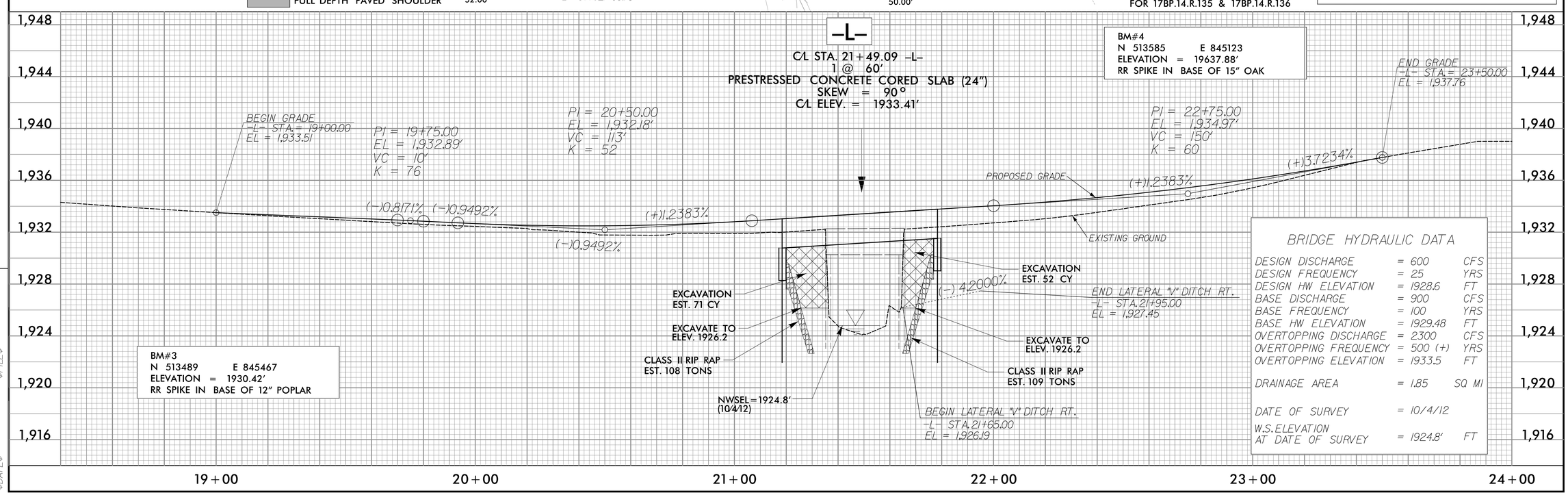

BRIDGE HYDRAULIC DATA

DESIGN DISCHARGE	= 600	CFS
DESIGN FREQUENCY	= 25	YRS
DESIGN HW ELEVATION	= 1928.6	FT
BASE DISCHARGE	= 900	CFS
BASE FREQUENCY	= 100	YRS
BASE HW ELEVATION	= 1929.48	FT
OVERTOPPING DISCHARGE	= 2300	CFS
OVERTOPPING FREQUENCY	= 500 (+)	YRS
OVERTOPPING ELEVATION	= 1933.5	FT
DRAINAGE AREA	= 1.85	SQ MI
DATE OF SURVEY	= 10/4/12	
W.S. ELEVATION AT DATE OF SURVEY	= 1924.8'	FT

$FILE$
$DATE$

DocuSign Envelope ID: 4539BEE0-96E6-4A9F-8BFC-43718BCD1251

STATE OF NORTH CAROLINA
DIVISION OF HIGHWAYS

TRANSPORTATION MANAGEMENT PLAN

TRANSYLVANIA COUNTY

DIVISION 14

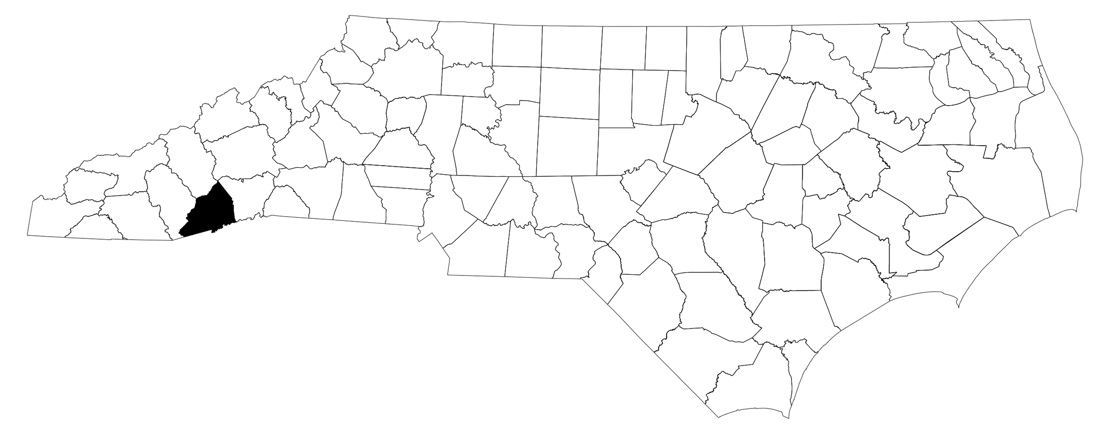

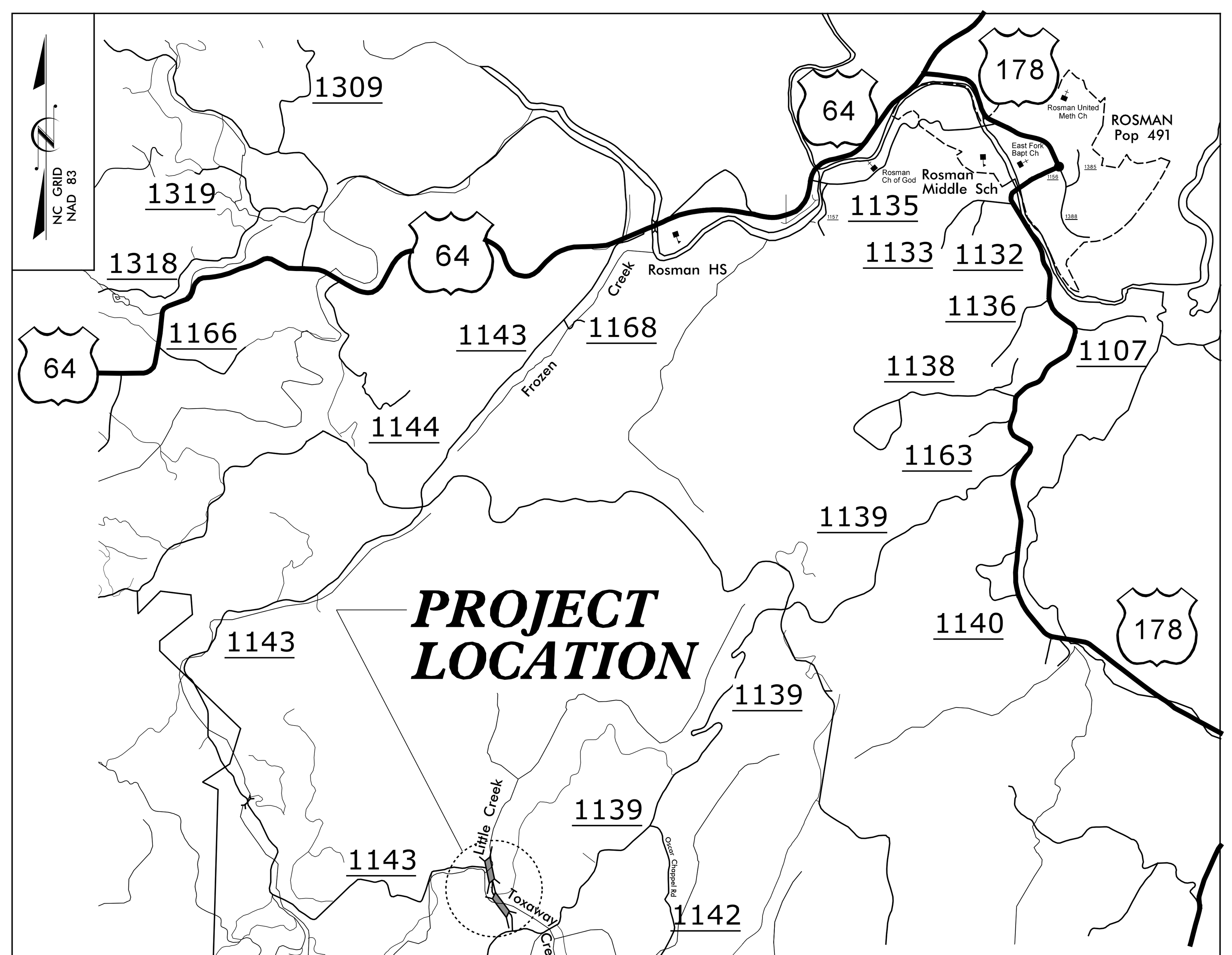

VICINITY MAP

LOCATION: BRIDGE NO. 138 OVER TOXAWAY CREEK AND BRIDGE NO. 205 OVER LITTLE CREEK ON SR 1143 (FROZEN CREEK RD)

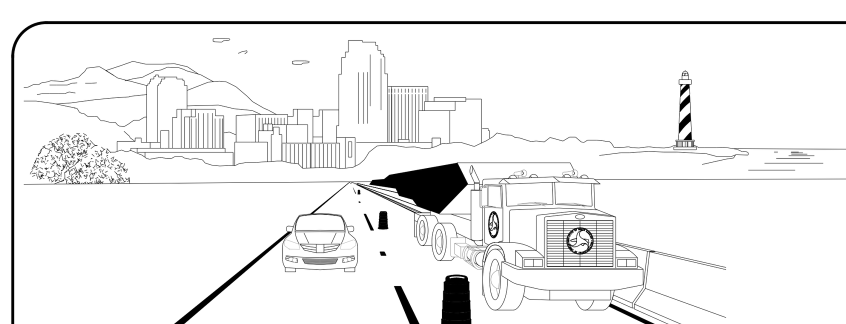

WORK ZONE SAFETY & MOBILITY
"from the MOUNTAINS to the COAST"

N.C.D.O.T. WORK ZONE TRAFFIC CONTROL
1580 MAIL SERVICE CENTER (MSC) RALEIGH, NC 27699-1580
1020 BIRCH RIDGE DRIVE, RALEIGH, NC 27610 (DELIVERY)
PHONE: (919) 250-4094 FAX: (919) 250-4098

J. S. BOURNE, P.E. — STATE TRAFFIC MANAGEMENT ENGINEER
LLOYD D. BROWN, P.E. — TRAFFIC CONTROL PROJECT ENGINEER
AARON CARVER, P.E. — TRAFFIC CONTROL PROJECT DESIGN ENGINEER
AARON CARVER, P.E. — TRAFFIC CONTROL DESIGN ENGINEER

DIVISION OF HIGHWAYS · STATE OF NORTH CAROLINA · DEPARTMENT OF TRANSPORTATION · WORK ZONE TRAFFIC CONTROL

INDEX OF SHEETS

SHEET NO.	TITLE
TMP-1	TITLE SHEET AND INDEX OF SHEETS
TMP-1A	LIST OF APPLICABLE ROADWAY STANDARD DRAWINGS, LEGEND, AND GENERAL NOTES
TMP-1B	TRANSPORTATION OPERATIONS PLAN: (MANAGEMENT STRATEGIES, GENERAL NOTES, AND LOCAL NOTES)
TMP-2	TEMPORARY TRAFFIC CONTROL PHASING
TMP-3	TEMPORARY TRAFFIC CONTROL PHASE I DETAIL
TMP-4	TEMPORARY TRAFFIC CONTROL PHASE II DETAIL
SIG - 1	TEMPORARY TRAFFIC SIGNAL PLAN
PM - 1	PAVEMENT MARKING PLAN

V&M Vaughn & Melton Consulting Engineers
Asheville, North Carolina 828-253-2796
Charlotte, North Carolina 704-357-0488

Copyright © 2006 Vaughn & Melton, Inc. All Rights Reserved

PROJECT ENGINEER: LLOYD D. BROWN, P.E.
DESIGN ENGINEER: AARON CARVER, P.E.

APPROVED: DocuSigned by: Lloyd DeWayne Brown
DATE: 10/30/2015

SEAL
NORTH CAROLINA PROFESSIONAL ENGINEER SEAL 20119 LLOYD D. BROWN

SHEET NO. TMP-1

PROJECT: 17BP.14.R.135; 17BP.14.R.136

DocuSign Envelope ID: E3A62B43-1F96-47EC-9D35-7A66AF362309

PROJ. REFERENCE NO.	SHEET NO.
17BP.14.R.135; 17BP.14.R.136	TMP-1A

ROADWAY STANDARD DRAWINGS

THE FOLLOWING ROADWAY STANDARDS AS SHOWN IN "ROADWAY STANDARD DRAWINGS" - PROJECT SERVICES UNIT - N.C. DEPARTMENT OF TRANSPORTATION - RALEIGH, N.C., DATED JANUARY 2012 ARE APPLICABLE TO THIS PROJECT AND BY REFERENCE HEREBY ARE CONSIDERED A PART OF THESE PLANS:

STD. NO.	TITLE
1101.01	WORK ZONE ADVANCE WARNING SIGNS
1101.02	TEMPORARY LANE CLOSURES
1101.04	TEMPORARY SHOULDER CLOSURES
1101.05	WORK ZONE VEHICLE ACCESSES
1101.11	TRAFFIC CONTROL DESIGN TABLES
1110.01	STATIONARY WORK ZONE SIGNS
1110.02	PORTABLE WORK ZONE SIGNS
1130.01	DRUMS
1135.01	CONES
1145.01	BARRICADES
1150.01	FLAGGING DEVICES
1180.01	SKINNY-DRUM
1205.01	PAVEMENT MARKINGS - LINE TYPES & OFFSETS
1205.12	PAVEMENT MARKINGS - BRIDGES
1261.01	GUARDRAIL & BARRIER DELINEATOR SPACING
1261.02	GUARDRAIL & BARRIER DELINEATOR TYPES
1262.01	GUARDRAIL END DELINEATION

LEGEND

GENERAL

- DIRECTION OF TRAFFIC FLOW
- EXIST. PVMT.
- NORTH ARROW
- PROPOSED PVMT.
- WORK AREA
- TEMPORARY PAVEMENT

TEMPORARY PAVEMENT MARKING

SYMBOL	DESCRIPTION
	PAINT
PA	WHITE EDGE LINE (4")
PI	YELLOW DOUBLE CENTER (4")
P4	STOP BAR (24" WHITE)

TRAFFIC CONTROL DEVICES

- BARRICADE (TYPE III)
- CONE
- DRUM — SKINNY DRUM — TUBULAR MARKER
- TEMPORARY CRASH CUSHION
- FLASHING ARROW PANEL (TYPE C)
- FLAGGER
- LAW ENFORCEMENT
- TRUCK MOUNTED IMPACT ATTENUATOR (TMIA)
- CHANGEABLE MESSAGE SIGN

TEMPORARY SIGNING

- PORTABLE SIGN
- STATIONARY SIGN
- STATIONARY OR PORTABLE SIGN

SIGNALS

- EXISTING
- PROPOSED
- TEMPORARY (T E M P)
- PORTABLE TRAFFIC SIGNAL

PAVEMENT MARKINGS

- EXISTING LINES
- TEMPORARY LINES

PAVEMENT MARKING SYMBOLS

- PAVEMENT MARKING SYMBOLS

Vaughn & Melton
Consulting Engineers
Charlotte, North Carolina 704-357-0488
Tri-Cities, Tennessee 423-467-8401
Knoxville, Tennessee 865-546-5800
Asheville, North Carolina 828-253-2796
Middlesboro, Kentucky 606-248-6600
Spartanburg, South Carolina 864-574-4775
Copyright © 2006 Vaughn & Melton, Inc. All Rights Reserved

APPROVED: DocuSigned by: Lloyd DeWayne Brown 00E54EF7FF3F4D3... DATE: 10/29/2015

SEAL

NORTH CAROLINA PROFESSIONAL SEAL 20119 ENGINEER LLOYD D. BROWN

DIVISION OF HIGHWAYS · STATE OF NORTH CAROLINA · DEPARTMENT OF TRANSPORTATION · WORK ZONE TRAFFIC CONTROL

ROADWAY STANDARD DRAWINGS & LEGEND

$$$$$SYSTIME$$$$$
$$$$$USERNAME$$$DGN$$$$$

DocuSign Envelope ID: E3A62B43-1F96-47EC-9D35-7A66AF362309

PROJ. REFERENCE NO.	SHEET NO.
17BP.14.R.135; 17BP.14.R.136	TMP-1B

GENERAL NOTES / LOCAL NOTES

CHANGES MAY BE REQUIRED WHEN PHYSICAL DIMENSIONS IN THE DETAIL DRAWINGS, STANDARD DETAILS, AND ROADWAY DETAILS ARE NOT ATTAINABLE TO MEET FIELD CONDITIONS OR RESULT IN DUPLICATE OR UNDESIRED OVERLAPPING OF DEVICES. MODIFICATION MAY INCLUDE: MOVING, SUPPLEMENTING, COVERING, OR REMOVAL OF DEVICES AS DIRECTED BY THE ENGINEER.

THE FOLLOWING GENERAL NOTES APPLY AT ALL TIMES FOR THE DURATION OF THE CONSTRUCTION PROJECT EXCEPT WHEN OTHERWISE NOTED IN THE PLAN OR DIRECTED BY THE ENGINEER.

LANE AND SHOULDER CLOSURE REQUIREMENTS

A) REMOVE LANE CLOSURE DEVICES FROM THE LANE WHEN WORK IS NOT BEING PERFORMED BEHIND THE LANE CLOSURE OR WHEN A LANE CLOSURE IS NO LONGER NEEDED OR AS DIRECTED BY THE ENGINEER.

B) WHEN PERSONNEL AND/OR EQUIPMENT ARE WORKING WITHIN 15 FT OF AN OPEN TRAVEL LANE, CLOSE THE NEAREST OPEN SHOULDER USING ROADWAY STANDARD DRAWING NO. 1101.04 UNLESS THE WORK AREA IS PROTECTED BY BARRIER OR GUARDRAIL OR A LANE CLOSURE IS INSTALLED.

C) WHEN PERSONNEL AND/OR EQUIPMENT ARE WORKING ON THE SHOULDER ADJACENT TO AN UNDIVIDED FACILITY AND WITHIN 5 FT OF AN OPEN TRAVEL LANE, CLOSE THE NEAREST OPEN TRAVEL LANE USING ROADWAY STANDARD DRAWING NO. 1101.02 UNLESS THE WORK AREA IS PROTECTED BY BARRIER OR GUARDRAIL.

D) WHEN PERSONNEL AND/OR EQUIPMENT ARE WORKING WITHIN A LANE OF TRAVEL OF AN UNDIVIDED OR DIVIDED FACILITY, CLOSE THE LANE ACCORDING TO THE TRAFFIC CONTROL PLANS, ROADWAY STANDARD DRAWINGS, OR AS DIRECTED BY THE ENGINEER. CONDUCT THE WORK SO THAT ALL PERSONNEL AND/OR EQUIPMENT REMAIN WITHIN THE CLOSED TRAVEL LANE.

E) DO NOT WORK SIMULTANEOUSLY WITHIN 15 FT ON BOTH SIDES OF AN OPEN TRAVELWAY, RAMP, OR LOOP WITHIN THE SAME LOCATION UNLESS PROTECTED WITH GUARDRAIL OR BARRIER.

PAVEMENT EDGE DROP OFF REQUIREMENTS

F) BACKFILL AT A 6:1 SLOPE UP TO THE EDGE AND ELEVATION OF EXISTING PAVEMENT IN AREAS ADJACENT TO AN OPENED TRAVEL LANE THAT HAS AN EDGE OF PAVEMENT DROP-OFF AS FOLLOWS:

BACKFILL DROP-OFFS THAT EXCEED 2 INCHES ON ROADWAYS WITH POSTED SPEED LIMITS OF 45 MPH OR GREATER.

BACKFILL DROP-OFFS THAT EXCEED 3 INCHES ON ROADWAYS WITH POSTED SPEED LIMITS LESS THAN 45 MPH.

BACKFILL WITH SUITABLE COMPACTED MATERIAL, AS APPROVED BY THE ENGINEER, AT NO EXPENSE TO THE DEPARTMENT.

G) DO NOT EXCEED A DIFFERENCE OF 2 INCHES IN ELEVATION BETWEEN OPEN LANES OF TRAFFIC FOR NOMINAL LIFTS OF 1.5 INCHES. INSTALL ADVANCE WARNING "UNEVEN LANES" SIGNS (W8-11) IN ADVANCE AND A MINIMUM OF EVERY HALF MILE THROUGHOUT THE UNEVEN AREA.

TRAFFIC PATTERN ALTERATIONS

H) NOTIFY THE ENGINEER TWENTY ONE (21) CALENDAR DAYS PRIOR TO ANY TRAFFIC PATTERN ALTERATION.

SIGNING

I) INSTALL ADVANCE WORK ZONE WARNING SIGNS WHEN WORK IS WITHIN 40 FT FROM THE EDGE OF TRAVEL LANE AND NO MORE THAN THREE (3) DAYS PRIOR TO THE BEGINNING OF CONSTRUCTION.

J) ENSURE ALL NECESSARY SIGNING IS IN PLACE PRIOR TO ALTERING ANY TRAFFIC PATTERN.

K) INSTALL BLACK ON ORANGE "DIP" SIGNS (W8-2) AND/OR "BUMP" SIGNS (W8-1) 100 FT IN ADVANCE OF THE UNEVEN AREA, OR AS DIRECTED BY THE ENGINEER.

TRAFFIC CONTROL DEVICES

L) WHEN LANE CLOSURES ARE NOT IN EFFECT SPACE CHANNELIZING DEVICES IN WORK AREAS NO GREATER IN FEET THAN TWICE THE POSTED SPEED LIMIT (MPH) EXCEPT, 10 FT ON-CENTER IN RADII, AND 3 FT OFF THE EDGE OF AN OPEN TRAVELWAY. REFER TO STANDARD SPECIFICATIONS FOR ROADS AND STRUCTURES SECTIONS 1130 (DRUMS), 1135 (CONES) AND 1180 (SKINNY DRUMS) FOR ADDITIONAL REQUIREMENTS.

M) PLACE ADDITIONAL SETS OF THREE CHANNELIZATION DEVICES PERPENDICULAR TO THE EDGE OF TRAVELWAY ON 500 FT CENTERS WHEN OPENED LANES ARE CLOSED TO TRAFFIC.

PAVEMENT MARKING

N) INSTALL TEMPORARY PAVEMENT MARKINGS ON INTERIM LAYERS OF PAVEMENT AS FOLLOWS:

ROAD NAME	MARKING	MARKER
-L- SR 1143 (FROZEN CREEK ROAD)	PAINT	NONE

O) PLACE ONE APPLICATION OF PAINT FOR TEMPORARY TRAFFIC PATTERNS. PLACE A SECOND APPLICATION OF PAINT SIX (6) MONTHS AFTER THE INITIAL APPLICATION AND EVERY SIX MONTHS AS DIRECTED BY THE ENGINEER.

P) TIE PROPOSED PAVEMENT MARKING LINES TO EXISTING PAVEMENT MARKING LINES.

Q) REMOVE/REPLACE ANY CONFLICTING/DAMAGED PAVEMENT MARKINGS BY THE END OF EACH DAY'S OPERATION.

MISCELLANEOUS

R) IN THE EVENT A TIE-IN CANNOT BE MADE IN ONE DAY'S TIME, BRING THE TIE-IN AREA TO AN APPROPRIATE ROADWAY ELEVATION AS DETERMINED BY THE ENGINEER. PLACE BLACK ON ORANGE "LOOSE GRAVEL" SIGNS (W8-7) AND BLACK ON ORANGE "PAVEMENT ENDS" SIGNS (W8-3) 100 FT AND 200 FT RESPECTIVELY IN ADVANCE OF THE UNEVEN AREAS. USE DRUMS TO DELINEATE THE EDGE OF ROADWAY ALONG UNPAVED AREAS.

LOCAL NOTES:

1) **EMERGENCY VEHICLE ACCESS MUST BE MAINTAINED AT ALL TIMES.**
2) **NOTIFY THE TRANSYLVANIA COUNTY SCHOOL BOARD 30 DAYS BEFORE ANY LANE CLOSURES.**
3) **DRIVEWAY ACCESS SHALL BE MAINTAINED AT ALL TIMES DURING CONSTRUCTION.**

MANAGEMENT STRATEGIES

PHASE I DEPICTS TRAFFIC TO BE MAINTAINED ON THE EXISTING ROAD, BUT REDUCED TO ONE LANE USING TEMPORARY SIGNALS AND PAVEMENT MARKINGS AS NEW ALIGNMENT IS CONSTRUCTED.

PHASE 2 DEPICTS TRAFFIC SHIFTED TO ONE LANE ON THE NEW ALIGNMENT USING TEMPORARY SIGNALS AND PAVEMENT MARKINGS WHILE THE REMAINDER IS CONSTRUCTED. A FLAGGING OPERATION WILL BE USED TO CONSTRUCT THE NEW TIE-INS.

Vaughn & Melton
Consulting Engineers
Asheville, North Carolina 828-253-2796
Charlotte, North Carolina 704-357-0488
Tri-Cities, Tennessee 423-467-940
Knoxville, Tennessee 865-546-5800
Middlesboro, Kentucky 606-248-6600
Spartanburg, South Carolina 864-574-4775
Copyright © 2006 Vaughn & Melton, Inc. All Rights Reserved

APPROVED: DocuSigned by: Lloyd DeWayne Brown DATE: 10/29/2015

SEAL

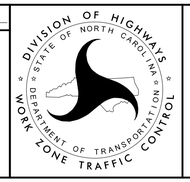

TRANSPORTATION OPERATIONS PLAN
(MANAGEMENT STRATEGIES & GENERAL NOTES)

$$$$$SYSTIME$$$$$
$$$$$$$$$$$$$$$$DGN$$$$$$$$$$$$$$$$$$$$
$$$$USERNAME$$$$

DocuSign Envelope ID: E3A62B43-1F96-47EC-9D35-7A66AF362309

PROJ. REFERENCE NO.	SHEET NO.
17BP.14.R.135; 17BP.14.R.136	TMP-2

PROJECT PHASING

PHASE I

STEP 1: - ERECT WORK ZONE ADVANCED WARNING SIGNS USING DETAIL DRAWINGS FOR WORK ZONE SIGNS. (SEE RDWY STD. 1101.01)

- INSTALL PORTABLE TRAFFIC SIGNALS AS REQUIRED IN THE SIGNAL PLANS (SEE SHEET SIG-1).

NOTE: STEP 2 SHALL BE COMPLETED IN A CONTINUOUS OPERATION.

STEP 2: USING RDWY STD 1101.02 SHEET 1 OF 15 AND FLAGGERS, PERFORM THE FOLLOWING ON SR 1143:

- REMOVE AS NECESSARY EXISTING PAVEMENT MARKINGS, AND PLACE TEMPORARY PAVEMENT MARKINGS (PAINT), FROM -L- STA. 10+25 +/- TO -L- STA. 15+50 +/- AND FROM -L- STA. 19+00 +/- TO -L- STA. 23+50 +/-. (SEE TMP-3)
- REMOVE EXISTING BRIDGE RAIL (RIGHT SIDE) ON BRIDGE 138, SAW CUT AND REMOVE RIGHT SIDE OF EXISTING BRIDGE TO LIMIT SHOWN (SEE SECTION B-B, TMP-3) AND INSTALL TEMPORARY GUARDRAIL FROM -L- STA. 12+25 +/- TO -L- STA. 13+50 +/-.(SEE TMP-3)
- REMOVE EXISTING BRIDGE RAIL (RIGHT SIDE) ON BRIDGE 205, SAW CUT AND REMOVE RIGHT SIDE OF EXISTING BRIDGE TO LIMIT SHOWN (SEE SECTION E-E, TMP-3) AND INSTALL TEMPORARY GUARDRAIL FROM -L- STA.21+00 +/- TO -L- STA. 22+00 +/-.(SEE TMP-3)
- ACTIVATE PORTABLE TRAFFIC SIGNALS AND DIRECT SR 1143 (FROZEN CREEK ROAD) TRAFFIC INTO A ONE LANE, TWO WAY PATTERN IN THE EXISTING SOUTHBOUND LANE OF SR 1143 (FROZEN CREEK ROAD). (SEE TMP-3)

STEP 3: - INSTALL TEMPORARY SHORING AS FOLLOWS:

- INSTALL TEMPORARY SHORING NO. 1 BEHIND TEMPORARY GUARDRAIL FROM -L- STA. 12+50 +/- TO -L- STA. 12+70 +/-. (SEE TMP-3)
- INSTALL TEMPORARY SHORING NO. 2 BEHIND TEMPORARY GUARDRAIL FROM -L- STA. 13+10 +/- TO -L- STA. 13+30 +/-. (SEE TMP-3)
- INSTALL TEMPORARY SHORING NO. 3 BEHIND TEMPORARY GUARDRAIL FROM -L- STA. 21+20 +/- TO -L- STA. 21+40 +/-. (SEE TMP-3)
- INSTALL TEMPORARY SHORING NO. 4 BEHIND TEMPORARY GUARDRAIL FROM -L- STA. 21+60 +/- TO -L- STA. 21+80 +/-. (SEE TMP-3)

STEP 4: - CONSTRUCT -L- (SR 1143 FROZEN CREEK ROAD) FROM -L- STA 10+25 TO STA 15+50 AND FROM -L- STA. 19+00 TO -L- STA. 23+50 NORTHBOUND LANE (RIGHT SIDE) EXCLUDING FINAL PAVEMENT LAYER.

- CONSTRUCT STRUCTURES PER THE STRUCTURE PLANS STAGE 1.

STEP 5: - INSTALL TEMPORARY SHORING FOR PHASE 2 AS FOLLOWS:

- INSTALL TEMPORARY SHORING NO. 1 BEHIND TEMPORARY GUARDRAIL FROM -L- STA. 12+40 +/- TO -L- STA. 12+51 +/-. (SEE TMP-4)
- INSTALL TEMPORARY SHORING NO. 2 BEHIND TEMPORARY GUARDRAIL FROM -L- STA. 13+23 +/- TO -L- STA. 13+35 +/-. (SEE TMP-4)
- INSTALL TEMPORARY SHORING NO. 3 BEHIND TEMPORARY GUARDRAIL FROM -L- STA. 21+06 +/- TO -L- STA. 21+18 +/-. (SEE TMP-4)
- INSTALL TEMPORARY SHORING NO. 4 BEHIND TEMPORARY GUARDRAIL FROM -L- STA. 21+80 +/- TO -L- STA. 21+91 +/-. (SEE TMP-4)

PHASE II

NOTE: STEP 1 SHALL BE COMPLETED IN A CONTINUOUS OPERATION.

STEP 1: USING RDWY STD 1101.02 SHEET 1 OF 15 AND FLAGGERS, PERFORM THE FOLLOWING ON SR 1143:

- REMOVE, AS NECESSARY, PAVEMENT MARKINGS PLACED IN STEP 2, PHASE I AND PLACE TEMPORARY PAVEMENT MARKINGS (PAINT) FROM -L- STA. 10+25 +/- TO -L- STA. 15+50 +/- AND FROM -L- STA. 19+00 +/- TO -L- STA. 23+50 (SEE TMP-4)
- INSTALL TEMPORARY GUARDRAIL FROM -L- STA. 12+11 +/- TO -L- STA. 13+64 +/- (SEE SECTION B-B, TMP-4) AND REMOVE GUARDRAIL PLACED IN STEP 2, PHASE I.
- INSTALL TEMPORARY GUARDRAIL FROM -L- STA. 20+77 +/- TO -L- STA. 22+21 +/- (SEE SECTION E-E, TMP-4) AND REMOVE GUARDRAIL PLACED IN STEP 2, PHASE I.
- ACTIVATE PORTABLE TRAFFIC SIGNALS AND DIRECT SR 1143 (FROZEN CREEK ROAD) TRAFFIC INTO A ONE LANE, TWO-WAY PATTERN IN THE NORTHBOUND LANE OF SR 1143 (FROZEN CREEK ROAD). (SEE TMP-4)

STEP 2: - REMOVE SOUTHBOUND SIDE OF EXISTING STRUCTURES (SEE STRUCTURE PLANS).

- REMOVE ALL TEMPORARY SHORING PLACED IN STEP 3, PHASE I.

STEP 3: - CONSTRUCT -L- (SR 1143 FROZEN CREEK ROAD) FROM -L- STA. 10+25 +/- TO -L- STA. 15+50 +/- AND FROM -L- STA. 19+00 +/- TO -L- STA. 23+50 SOUTHBOUND LANE (LEFT SIDE) EXCLUDING FINAL PAVEMENT LAYER.

- CONSTRUCT STRUCTURES PER THE STRUCTURE PLANS STAGE 2.

STEP 4: - USING RDWY STD 1101.02 SHEET 1 OF 15 AND FLAGGERS, CONSTRUCT GUARDRAIL, REMOVE TEMPORARY GUARDRAIL PLACED IN STEP 1, PHASE II, PLACE THE FINAL LAYER OF SURFACE COURSE, AND THE FINAL PAVEMENT MARKINGS (PAINT) ON THE ENTIRE PROJECT.

STEP 5: - REMOVE ALL TEMPORARY TRAFFIC CONTROL DEVICES AND SIGNALS.

- OPEN SR 1143 (FROZEN CREEK ROAD) TO 2-LANE, 2-WAY TRAFFIC.

Vaughn & Melton
Consulting Engineers
Asheville, North Carolina 828-253-2796
Charlotte, North Carolina 704-357-0488
Tri-Cities, Tennessee 423-467-8401
Knoxville, Tennessee 865-546-5800
Middlesboro, Kentucky 606-248-6600
Spartanburg, South Carolina 864-574-4775
Copyright © 2006 Vaughn & Melton, Inc. All Rights Reserved

APPROVED: Lloyd DeWayne Brown DATE: 10/29/2013

SEAL: NORTH CAROLINA PROFESSIONAL SEAL 20119 ENGINEER LLOYD D. BROWN

DIVISION OF HIGHWAYS, STATE OF NORTH CAROLINA, DEPARTMENT OF TRANSPORTATION, WORK ZONE TRAFFIC CONTROL

PHASING

$$$$$SYSTIME$$$$$ $$$$$$$$$$$$$$DGN$$$$$$$$$$$$$$ $$$$USERNAME$$$$

DocuSign Envelope ID: EAF4A801-5E18-4570-80F6-624D472E627A

PROJ. REFERENCE NO.	SHEET NO.
17BP.14.R.135; 17BP.14.R.136	TMP-3

PLACE SIGN (RIGHT)
AT -L- STA 9+25
W1-4L
48" X 48"

PLACE SIGN (RIGHT)
AT -L- STA 7+75
W3-3
48" X 48"

PLACE SIGN (RIGHT)
AT -L- STA 5+75
ONE LANE ROAD AHEAD
W20-4
48" X 48"
25 M.P.H.
W13-1
24" X 24"

PLACE SIGN (RIGHT)
AT -L- STA 4+75
ROAD WORK AHEAD
W20-1
48" X 48"

PLACE SIGN (LEFT)
AT -L- STA 4+75
END ROAD WORK
G20-2 A
48" X 24"

SECTION A-A

-L- STA 11+50

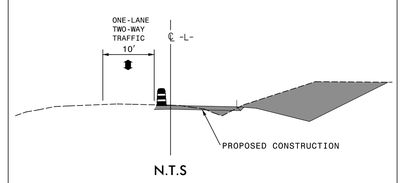

N.T.S

SECTION B-B

-L- STA 13+00

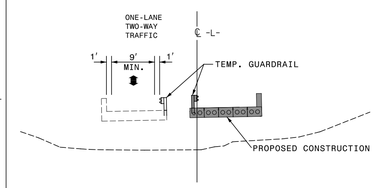

N.T.S

SECTION C-C

-L- STA 14+50

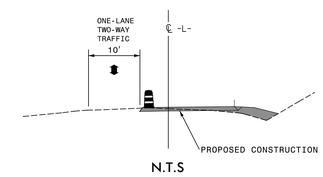

N.T.S

NO GRID
NAD 83/NSRS 2011

END ROAD WORK
G20-2 A
48" X 24"
PLACE SIGN (RIGHT)
AT -L- STA 29+00

ROAD WORK AHEAD
W20-1
48" X 48"
PLACE SIGN (LEFT)
AT -L- STA 29+00

ONE LANE ROAD AHEAD
W20-4
48" X 48"
25 M.P.H.
W13-1
24" X 24"
PLACE SIGN (LEFT)
AT -L- STA 28+00

W3-3
48" X 48"
PLACE SIGN (LEFT)
AT -L- STA 26+00

STOP HERE ON RED
R10-6
24" X 36"
PLACE SIGN (RIGHT)
AT -L- STA 9+75

P4 STOP BAR
(24" WHITE)

TO US 64

PI

PORTABLE TRAFFIC SIGNAL

PA

BEGIN PROJECT 17BP.14.R.135
-L- STA 10+25

TEMPORARY SHORING NO. 1
-L- STA. 12+40
TO 12+70

TEMPORARY SHORING NO. 2
-L- STA. 13+17
TO 13+40

END TEMPORARY GUARDRAIL
-L- STA 13+50

BEGIN TEMPORARY GUARDRAIL
-L- STA 12+25

A A
B B
C C

TOXAWAY CREEK

50'
50'
TAPER

TYPE III-A

DRUM
25' SPACING
(TYP)

TYPE III BARRICADE

DRUM
10' SPACING
(TYP)

END PROJECT 17BP.14.R.135
-L- STA 15+50

DRIVEWAY ACCESS SHALL BE MAINTAINED
AT ALL TIMES DURING CONSTRUCTION.

R11-2
48" x 30"
ROAD CLOSED

TYPE III BARRICADE

BRIDGE NO. 138

DRIVEWAY ACCESS SHALL BE MAINTAINED
AT ALL TIMES DURING CONSTRUCTION.

R11-4
60" x 30"
ROAD CLOSED TO THRU TRAFFIC
DETOUR
M4-10L
48" x 18"

TYPE III BARRICADE

ENTRANCE TO RIDGE HAVEN (PRIVATE)

PORTABLE TRAFFIC SIGNAL

BEGIN PROJECT 17BP.14.R.136
-L- STA 19+00

TEMPORARY SHORING NO. 3
-L- STA. 21+05
TO 21+35

TEMPORARY SHORING NO. 4
-L- STA. 21+65
TO 21+92

BEGIN TEMPORARY GUARDRAIL
-L- STA 21+00

END TEMPORARY GUARDRAIL
-L- STA 22+00

W1-4R
48" X 48"

STOP HERE ON RED
R10-6
24" X 36"

STOP BAR
(24" WHITE)

TO S.R. 1139
OLD TOXAWAY RD.

END PROJECT 17BP.14.R.136
-L- STA 23+50

PORTABLE TRAFFIC SIGNAL

DRUM
25' SPACING
(TYP)

DRUM
10' SPACING
(TYP)

R11-2
48" x 30"
ROAD CLOSED

TYPE III BARRICADE

BRIDGE NO. 205

50 25 0 50 100
SCALE 1"=50'

SECTION D-D

-L- STA 20+50

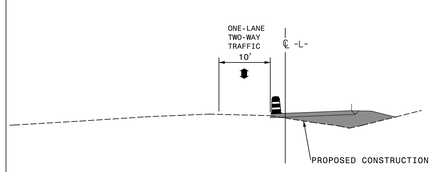

N.T.S

SECTION E-E

-L- STA 21+50

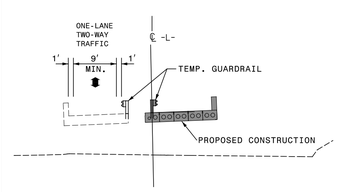

N.T.S

SECTION F-F

-L- STA 22+50

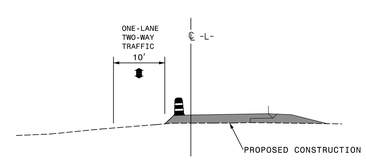

N.T.S

WORK AREA

V&M
Vaughn & Melton
Consulting Engineers
Asheville, North Carolina 828-253-2796
Charlotte, North Carolina 704-357-0488
Tri-Cities, Tennessee 423-467-8401
Knoxville, Tennessee 865-546-5800
Middlesboro, Kentucky 606-248-6600
Spartanburg, South Carolina 864-574-4775
Copyright © 2006 Vaughn & Melton, Inc.
All Rights Reserved

APPROVED Lloyd DeWayne Brown DATE 11/13/2015
DocuSigned by: 33954DF17F57489...

SEAL
NORTH CAROLINA PROFESSIONAL SEAL 20119 ENGINEER LLOYD D. BROWN

DIVISION OF HIGHWAYS
STATE OF NORTH CAROLINA
DEPARTMENT OF TRANSPORTATION
WORK ZONE TRAFFIC CONTROL

PHASE I

$$$$SYSTIME$$$$
$$$$SFN$$$$SDON$$$$
$$$$SFN$$$$SELENAME$$$$

DocuSign Envelope ID: 77DD0521-6954-4995-B20E-E80A28CEC59C

PROJ. REFERENCE NO.	SHEET NO.
17BP.14.R.135; 17BP.14.R.136	TMP-4

PLACE SIGN (RIGHT) AT -L- STA 9+25
W3-3 48" X 48"

ONE LANE ROAD AHEAD — W20-4 48" X 48"
25 M.P.H. — W13-1 24" X 24"
PLACE SIGN (RIGHT) AT -L- STA 8+25

ROAD WORK AHEAD — W20-1 48" X 48"
PLACE SIGN (RIGHT) AT -L- STA 7+25

END ROAD WORK — G20-2 A 48" X 24"
PLACE SIGN (LEFT) AT -L- STA 7+25

SECTION A-A

-L- STA 11+50

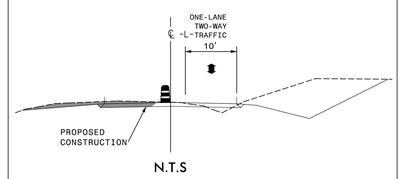

N.T.S

SECTION B-B

-L- STA 13+00

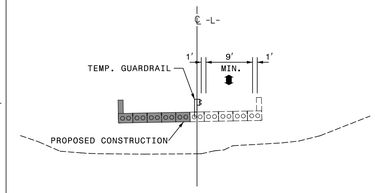

N.T.S

SECTION C-C

-L- STA 14+50

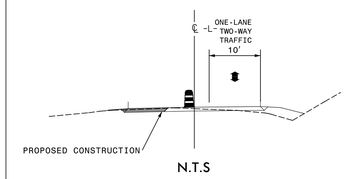

N.T.S

END ROAD WORK — G20-2 A 48" X 24"
PLACE SIGN (RIGHT) AT -L- STA 29+00

ROAD WORK AHEAD — W20-1 48" X 48"
PLACE SIGN (LEFT) AT -L- STA 29+00

ONE LANE ROAD AHEAD — W20-4 48" X 48"
25 M.P.H. — W13-1 24" X 24"
PLACE SIGN (LEFT) AT -L- STA 28+00

W3-3 48" X 48"
PLACE SIGN (LEFT) AT -L- STA 26+00

W1-4L 48" X 48"
PLACE SIGN (LEFT) AT -L- STA 24+50

NO GRID
NAD 83/NSRS 2011

R11-2 48" x 30" — ROAD CLOSED
TYPE III BARRICADE

TEMPORARY SHORING NO. 1 -L- STA. 12+40 TO 12+51

TEMPORARY SHORING NO. 2 -L- STA. 13+23 TO 13+35

BEGIN PROJECT 17BP.14.R.135 -L- STA 10+25

P4 STOP BAR (24" WHITE)

PI

50' TAPER

TO US 64

PORTABLE TRAFFIC SIGNAL

STOP HERE ON RED — R10-6 24" X 36"
PLACE SIGN (RIGHT) AT -L- STA 9+75

W1-4R 48" X 48"
PLACE SIGN (RIGHT) AT -L- STA 10+75

PA

40' TAPER

DRUM 25' SPACING (TYP)

DRUM 10' SPACING (TYP)

END TEMPORARY GUARDRAIL -L- STA 13+64

END PROJECT 17BP.14.R.135 -L- STA 15+50

BEGIN TEMPORARY GUARDRAIL -L- STA 12+11

DRIVEWAY ACCESS SHALL BE MAINTAINED AT ALL TIMES DURING CONSTRUCTION.

DRIVEWAY ACCESS SHALL BE MAINTAINED AT ALL TIMES DURING CONSTRUCTION.

TOXAWAY CREEK

SR 1143 (B BST) FROZEN CREEK RD.

TYPE TL-2

BRIDGE NO. 138

R11-4 60" x 30" — ROAD CLOSED TO THRU TRAFFIC / DETOUR
M4-10L 48" x 18"
TYPE III BARRICADE

ENTRANCE TO RIDGE HAVEN (PRIVATE)

PORTABLE TRAFFIC SIGNAL

BEGIN PROJECT 17BP.14.R.136 -L- STA 19+00

TEMPORARY SHORING NO. 4 -L- STA. 21+80 TO 21+91

BEGIN TEMPORARY GUARDRAIL -L- STA 20+77

END TEMPORARY GUARDRAIL -L- STA 22+21

STOP HERE ON RED — R10-6 24" X 36"

TO S.R.1139 OLD TOXAWAY RD.

PI

P4 STOP BAR (24" WHITE)

END PROJECT 17BP.14.R.136 -L- STA 23+50

PORTABLE TRAFFIC SIGNAL

DRUM 10' SPACING (TYP)

DRUM 25' SPACING (TYP)

40' TAPER

TEMPORARY SHORING NO. 3 -L- STA. 21+06 TO 21+18

R11-2 48" x 30" — ROAD CLOSED
TYPE III BARRICADE

BRIDGE NO. 205

50 25 0 50 100
SCALE 1"=50'

SECTION D-D

-L- STA 20+50

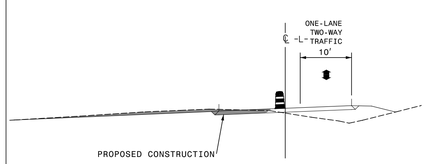

N.T.S

SECTION E-E

-L- STA 21+50

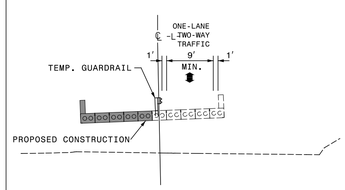

N.T.S

SECTION F-F

-L- STA 22+50

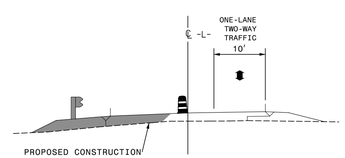

N.T.S

WORK AREA

Vaughn & Melton
Consulting Engineers
Asheville, North Carolina 828-253-2796
Charlotte, North Carolina 704-357-0488
Tri-Cities, Tennessee 423-467-8401
Knoxville, Tennessee 865-546-5800
Middlesboro, Kentucky 606-248-6600
Spartanburg, South Carolina 864-574-4775
Copyright © 2006 Vaughn & Melton, Inc. All Rights Reserved

APPROVED: _____ DATE: _____

SEAL

NORTH CAROLINA PROFESSIONAL SEAL 20119 ENGINEER LLOYD D. BROWN

DocuSigned by: Lloyd DeWayne Brown
339540F17F5746B...
11/13/2015

DIVISION OF HIGHWAYS STATE OF NORTH CAROLINA DEPARTMENT OF TRANSPORTATION WORK ZONE TRAFFIC CONTROL

PHASE II

$$$$ USERNAME = $$$$ DGN = $$$$ SYSTIME = $$$$

DocuSign Envelope ID: E3A62B43-1F96-47EC-9D35-7A66AF362309

PROJECT REFERENCE NO.	SHEET NO.
17BP.14.R.135; 17BP.14.R.136	SIG. 1

PHASING DIAGRAM

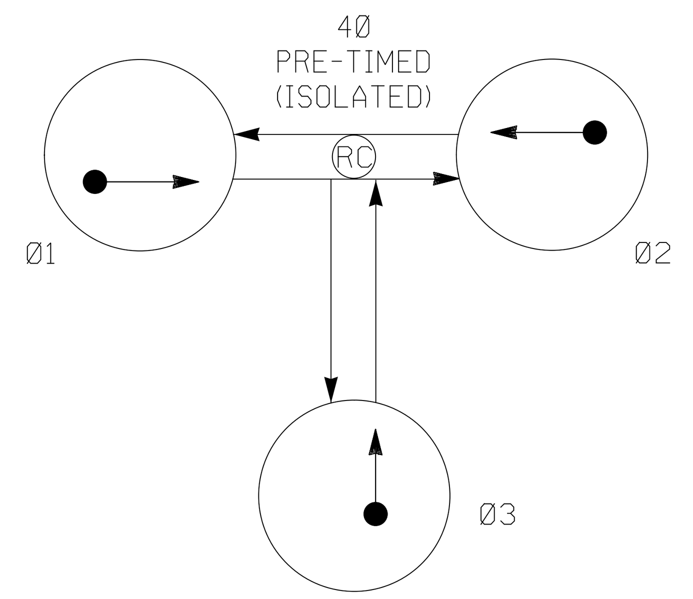

PHASING DIAGRAM DETECTION LEGEND

- DETECTED MOVEMENT
- UNDETECTED MOVEMENT (OVERLAP)
- UNSIGNALIZED MOVEMENT
- PEDESTRIAN MOVEMENT

TABLE OF OPERATION

SIGNAL FACE	Ø2 R/W	Ø2 CLEAR Ø1 1	Ø2 CLEAR Ø1 2	Ø1 R/W	Ø1 CLEAR Ø3 1	Ø1 CLEAR Ø3 2	Ø3 R/W	Ø3 CLEAR Ø2 1	Ø3 CLEAR Ø2 2	FLASH
11,12	R	R	R	G	Y	R	R	R	R	R
21,22	G	Y	R	R	R	R	R	R	R	R
31	R	R	R	R	R	R	G	Y	R	R

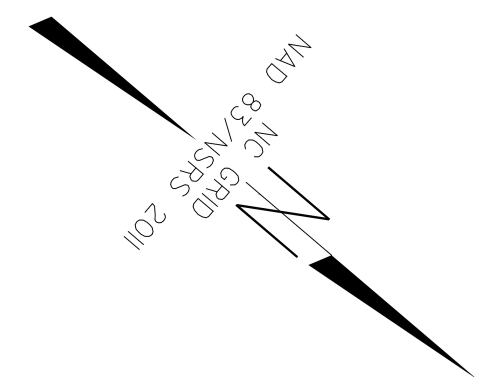

SIGNAL FACE I.D.

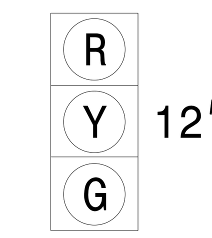

11, 12
21, 22
31

NOTES

1. PORTABLE TEMPORARY INSTALLATION.
2. SIGNAL HEADS SHALL BE NO CLOSER THAN 40 FEET FROM THE STOPLINE.
3. NO COUNTS AVAILABLE.
4. CONTRACTOR TO UTILIZE NCDOT PRE-APPROVED PORTABLE TRAFFIC SIGNAL MANUFACTURER AND MODEL.

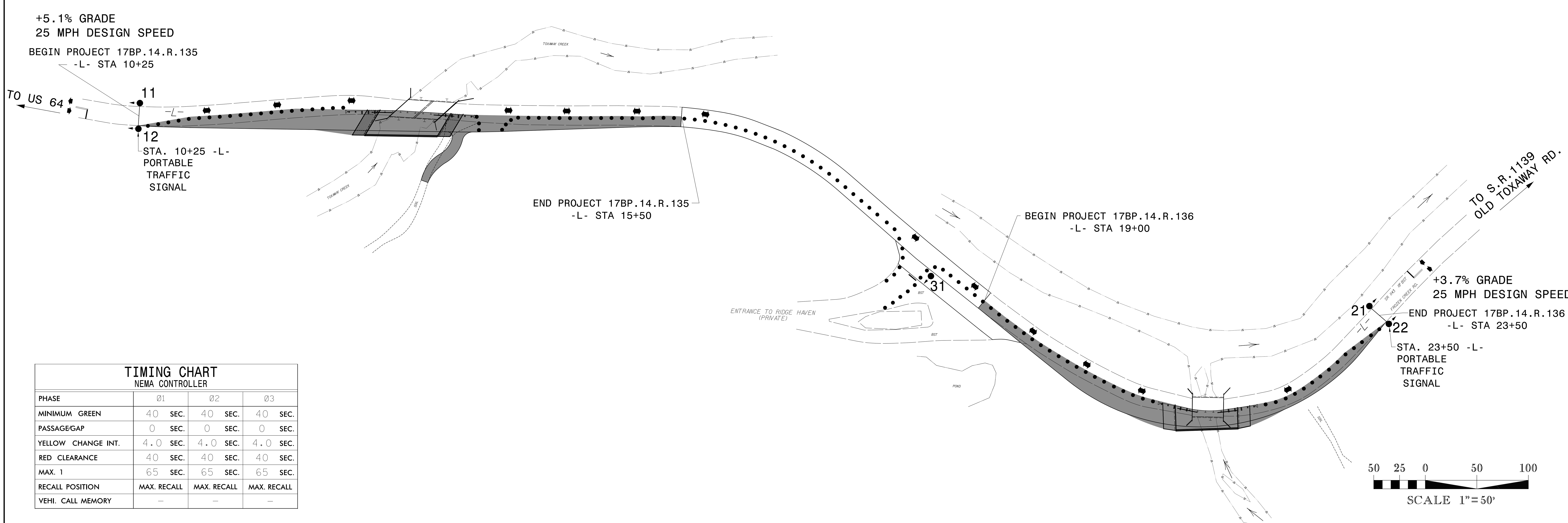

TIMING CHART

NEMA CONTROLLER

PHASE	Ø1	Ø2	Ø3
MINIMUM GREEN	40 SEC.	40 SEC.	40 SEC.
PASSAGE/GAP	0 SEC.	0 SEC.	0 SEC.
YELLOW CHANGE INT.	4.0 SEC.	4.0 SEC.	4.0 SEC.
RED CLEARANCE	40 SEC.	40 SEC.	40 SEC.
MAX. 1	65 SEC.	65 SEC.	65 SEC.
RECALL POSITION	MAX. RECALL	MAX. RECALL	MAX. RECALL
VEHI. CALL MEMORY	–	–	–

CONSTRUCTION ZONE

Prepared in the Offices of:

V&M Vaughn & Melton Consulting Engineers

Asheville, North Carolina 828·253·2796

Charlotte, North Carolina 704·357·0488
Tri-Cities, Tennessee 423·467·8401
Knoxville, Tennessee 865·546·5800
Middlesboro, Kentucky 606·248·6600
Spartanburg, South Carolina 864·574·4775

Copyright © 2006 Vaughn & Melton, Inc. All Rights Reserved

PORTABLE TRAFFIC SIGNAL PLAN
SR 1143 FROZEN CREEK ROAD

DIV. 14 TRANSYLVANIA COUNTY

PLAN DATE:	12/31/13	REVIEWED BY:	LDB
PREPARED BY:	WCC	REVIEWED BY:	

SCALE 0 50

REVISIONS	INIT.	DATE

SEAL

NORTH CAROLINA PROFESSIONAL SEAL 20119 ENGINEER LLOYD D. BROWN

DocuSigned by: Lloyd DeWayne Brown 33954DF17F5746B... 10/29/2015

SIGNATURE DATE

SIG. INVENTORY NO.

DocuSign Envelope ID: E3A62B43-1F96-47EC-9D35-7A66AF362309

PROJ. REFERENCE NO.	SHEET NO.
17BP.14.R.135; 17BP.14.R.136	PM-1

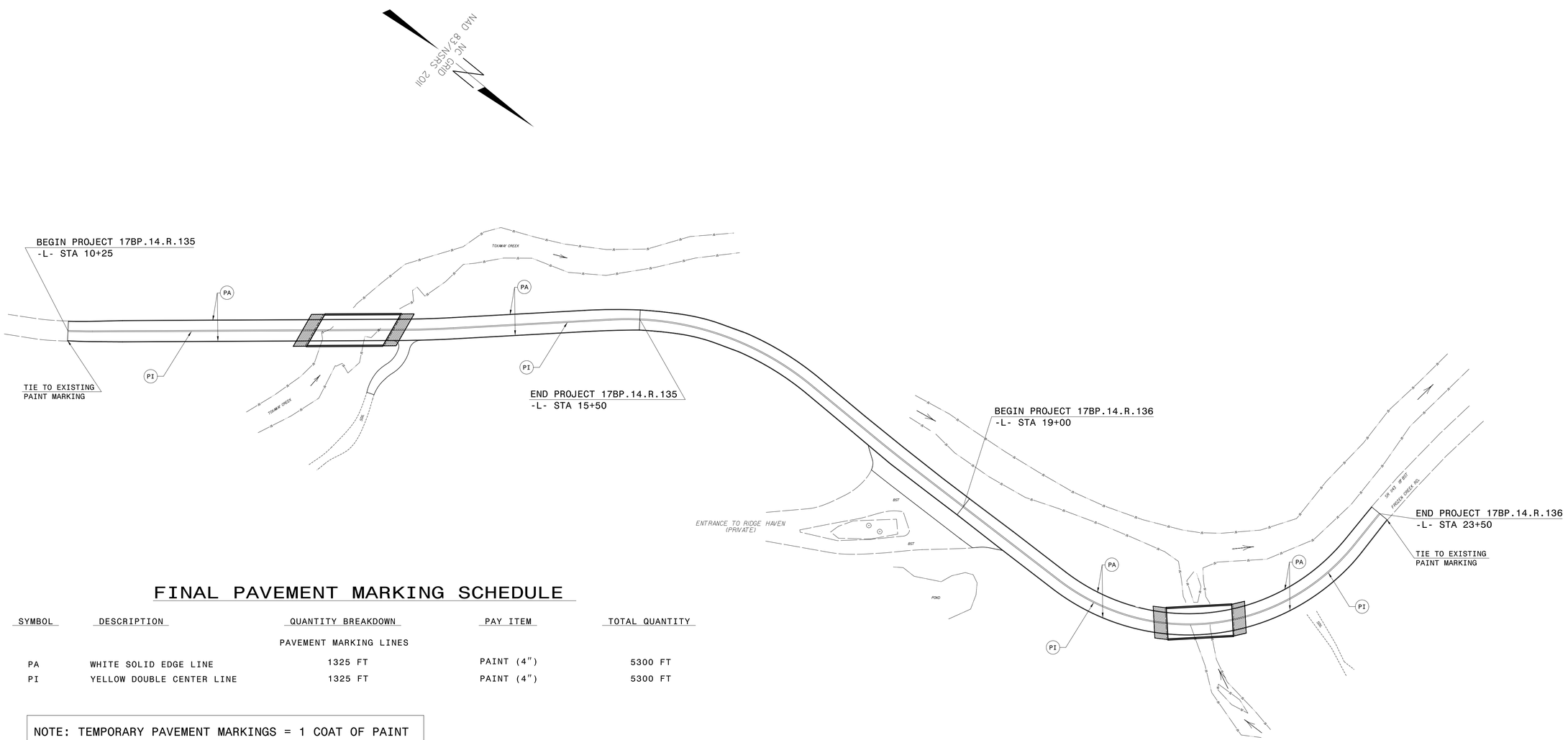

FINAL PAVEMENT MARKING SCHEDULE

SYMBOL	DESCRIPTION	QUANTITY BREAKDOWN	PAY ITEM	TOTAL QUANTITY
		PAVEMENT MARKING LINES		
PA	WHITE SOLID EDGE LINE	1325 FT	PAINT (4")	5300 FT
PI	YELLOW DOUBLE CENTER LINE	1325 FT	PAINT (4")	5300 FT

NOTE: TEMPORARY PAVEMENT MARKINGS = 1 COAT OF PAINT
FINAL PAVEMENT MARKINGS = 2 COATS OF PAINT

V&M
Vaughn & Melton
Consulting Engineers
Asheville, North Carolina 828-253-2796
Charlotte, North Carolina 704-357-0488
Tri-Cities, Tennessee 423-467-8401
Knoxville, Tennessee 865-546-5800
Middlesboro, Kentucky 606-248-6600
Spartanburg, South Carolina 864-574-4775
Copyright © 2006 Vaughn & Melton, Inc.
All Rights Reserved

APPROVED: DocuSigned by: Lloyd Wayne Brown DATE: 10/29/2015

SEAL

NORTH CAROLINA PROFESSIONAL SEAL 20119 ENGINEER LLOYD D. BROWN

DIVISION OF HIGHWAYS
STATE OF NORTH CAROLINA
DEPARTMENT OF TRANSPORTATION
WORK ZONE TRAFFIC CONTROL

PERMANENT PAVEMENT MARKING PLAN

$$$$SYSTIME$$$$
$$$$$$$$$$$$$$$$DGN$$$$$$$$$$$$$$$$
$$$$USERNAME$$$$

PROJECT REFERENCE NO.	SHEET NO.
17BP.14.R.135	EC-1
R/W SHEET NO.	

EROSION CONTROL PLAN

ROADSIDE ENVIRONMENTAL UNIT
DEPARTMENT OF TRANSPORTATION
DIVISION OF HIGHWAYS
RALEIGH, N.C.

2012 STANDARD SPECIFICATIONS

THESE EROSION AND SEDIMENT CONTROL PLANS COMPLY WITH THE REGULATIONS SET FORTH BY THE NCG-010000 GENERAL CONSTRUCTION PERMIT EFFECTIVE AUGUST 3, 2011 ISSUED BY THE NORTH CAROLINA DEPARTMENT OF ENVIRONMENT AND NATURAL RESOURCES DIVISION OF WATER QUALITY.

ENVIRONMENTALLY SENSITIVE AREA
SEE PROJECT SPECIAL PROVISIONS

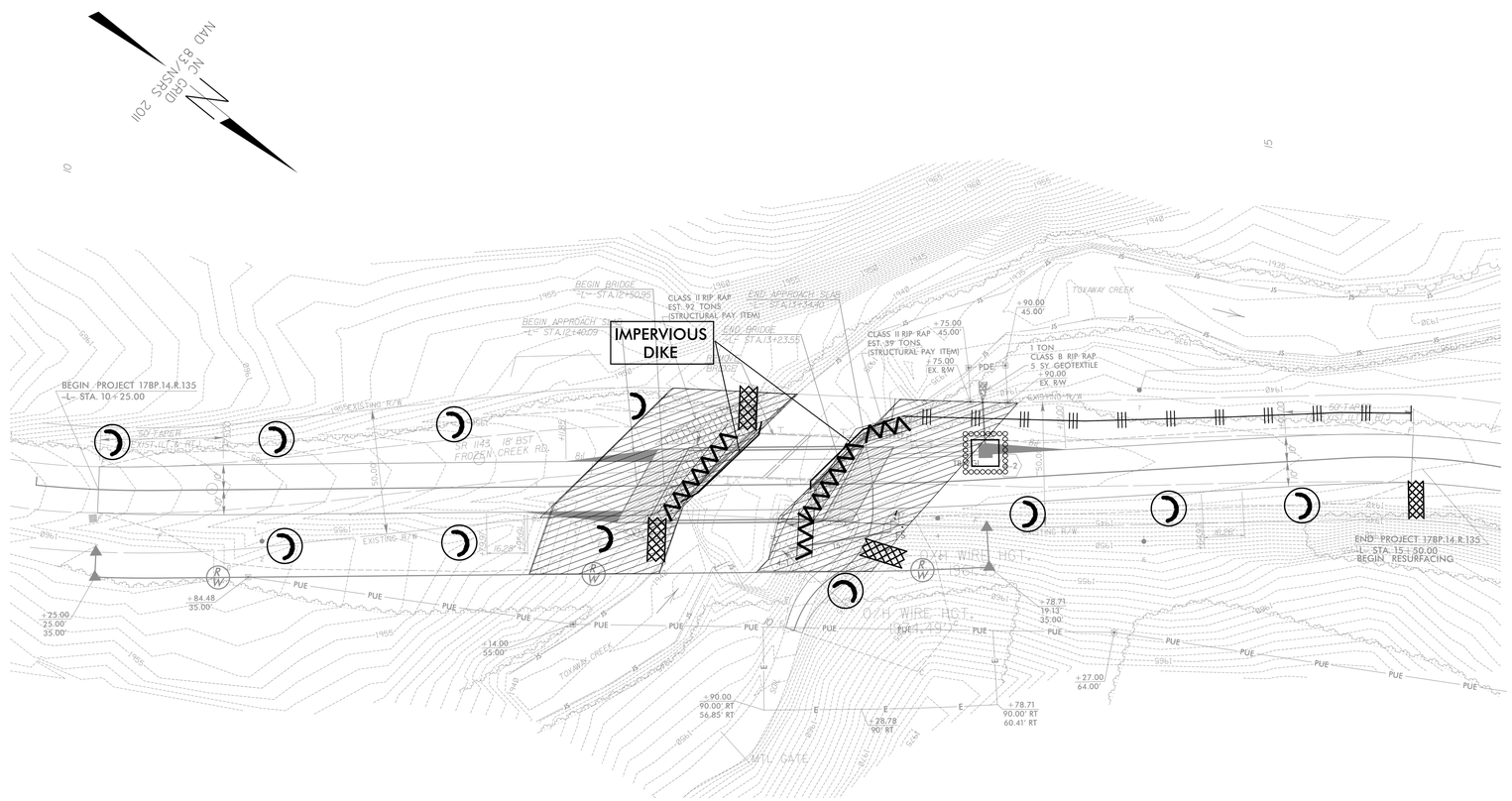

Std. #	Description	Symbol
1605.01	Temporary Silt Fence	
1606.01	Special Sediment Fence	
1632.03	Rock Inlet Sediment Trap Type C	
1633.01	Temporary Rock Silt Check Type-A	
1633.01	Wattle/Coir Fiber Wattle with Polyacrylamide (PAM)	EW
1633.01	Wattle/Coir Fiber Wattle	

Level III: Designer of Erosion and Sediment Control Plans

MICHAEL CLARK
Date Issued: June 5, 2013
Date Expires: December 31, 2016
Certification Number: 3376

NOTES: ANY DEVIATION FROM OPTIONS GIVEN WILL REQUIRE PRIOR APPROVAL BY ENGINEER.

ADDITIONAL EROSION CONTROL DEVICES MAY NEED TO BE INSTALLED AS DIRECTED BY THE ENGINEER.

PROJECT NO. 17BP.14.R.135
COUNTY TRANSYLVANIA
STATION: 12+87.25 -L-
REPLACES BRIDGE NO. 138

STATE OF NORTH CAROLINA
DEPARTMENT OF TRANSPORTATION
RALEIGH

BRIDGE #138 ON SR 1143
OVER TOXAWAY CREEK

REVISIONS						SHEET NO.
NO.	BY	DATE	NO.	BY	DATE	EC-1
1			3			TOTAL SHEETS
2			4			5

EROSION CONTROL PLAN

PROJECT REFERENCE NO.	SHEET NO.
17BP.14.R.136	EC-2
R/W SHEET NO.	
ROADWAY DESIGN ENGINEER	HYDRAULICS ENGINEER

BREVARD, NC 28712

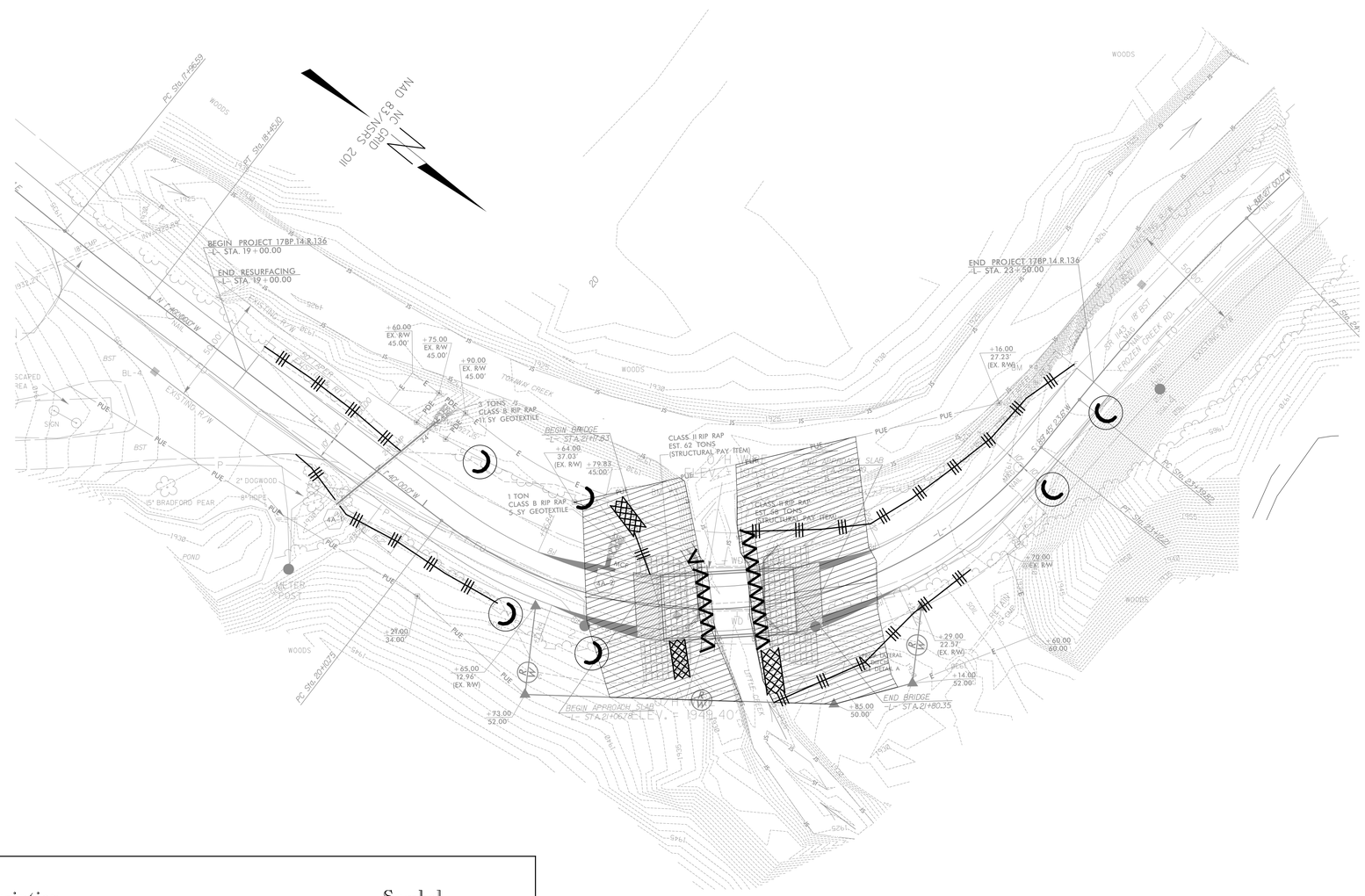

THESE EROSION AND SEDIMENT CONTROL PLANS COMPLY WITH THE REGULATIONS SET FORTH BY THE NCG-010000 GENERAL CONSTRUCTION PERMIT EFFECTIVE AUGUST 3, 2011 ISSUED BY THE NORTH CAROLINA DEPARTMENT OF ENVIRONMENT AND NATURAL RESOURCES DIVISION OF WATER QUALITY.

ENVIRONMENTALLY SENSITIVE AREA
SEE PROJECT SPECIAL PROVISIONS

CLEARING AND GRUBBING
EROSION CONTROL FOR
CONSTRUCTION SHEET 4

Std. #	Description	Symbol
1605.01	Temporary Silt Fence	
1606.01	Special Sediment Control Fence	
1633.01	Temporary Rock Silt Check Type-A	
1633.02	Wattle / Coir Fiber Wattle	
	Wattle / Coir Fiber Wattle with Polyacrylamide (PAM)	

Level III-A: Designer of Erosion and Sediment Control Plans

Michael Clark
Date Issued: June 5, 2013
Date Expires: December 31, 2016
Certification Number: 3376

NOTES: ANY DEVIATION FROM OPTIONS GIVEN WILL REQUIRE PRIOR APPROVAL BY ENGINEER.

ADDITIONAL EROSION CONTROL DEVICES MAY NEED TO BE INSTALLED AS DIRECTED BY THE ENGINEER.

ROADSIDE ENVIRONMENTAL UNIT
DEPARTMENT OF TRANSPORTATION
DIVISION OF HIGHWAYS
RALEIGH, N.C.

2012 STANDARD SPECIFICATIONS

PROJECT NO. 17BP.14.R.136
COUNTY TRANSYLVANIA
STATION: 21+41.09 -L-
REPLACES BRIDGE NO. 205

STATE OF NORTH CAROLINA
DEPARTMENT OF TRANSPORTATION
RALEIGH

BRIDGE #205 ON SR 1143
OVER LITTLE CREEK

REVISIONS						SHEET NO.
NO.	BY	DATE	NO.	BY	DATE	EC-2
1			3			TOTAL SHEETS
2			4			4

PROJECT REFERENCE NO.	SHEET NO.
I7BP.14.R.135; I7BP.14.R.136	EC-3
R/W SHEET NO.	
ROADWAY DESIGN ENGINEER	HYDRAULICS ENGINEER

STATE OF NORTH CAROLINA
DIVISION OF HIGHWAYS

SOIL STABILIZATION TIMEFRAMES

SITE DESCRIPTION	STABILIZATION TIME	TIMEFRAME EXCEPTIONS
PERIMETER DIKES, SWALES, DITCHES, AND SLOPES	7 DAYS	NONE
HIGH QUALITY WATER (HQW) ZONES	7 DAYS	NONE
SLOPES STEEPER THAN 3:1	7 DAYS	IF SLOPES ARE 10′ OR LESS IN LENGTH AND ARE NOT STEEPER THAN 2:1, 14 DAYS ARE ALLOWED.
SLOPES 3:1 OR FLATTER	14 DAYS	7 DAYS FOR SLOPES GREATER THAN 50′ IN LENGTH.
ALL OTHER AREAS WITH SLOPES FLATTER THAN 4:1	14 DAYS	NONE, EXCEPT FOR PERIMETERS AND HQW ZONES.

PROJECT REFERENCE NO.	SHEET NO.
17BP.14.R.135; 17BP.14.R.136	EC-3A

DIVISION OF HIGHWAYS
STATE OF NORTH CAROLINA

SOIL STABILIZATION SUMMARY SHEET

MATTING FOR EROSION CONTROL

CONST SHEET NO.	LINE	FROM STATION	TO STATION	SIDE	ESTIMATE (SY)
4	L	10+25	12+00	RT	260
4	L	10+25	12+50	LT	225
4	L	13+50	15+50	RT	260
4A	L	21+65	21+95	RT	50
4A	L	20+50	21+25	RT	105
				SUBTOTAL	900
MISCELLANEOUS MATTING TO BE INSTALLED AS DIRECTED BY THE ENGINEER					**2200
				TOTAL	3100
				SAY	3200

**EROSION CONTROL MATTING TO BE PLACED ON ALL DISTURBED SLOPES

PERMANENT SOIL REINFORCEMENT MAT

CONST SHEET NO.	LINE	FROM STATION	TO STATION	SIDE	ESTIMATE (SY)
				SUBTOTAL	
		ADDITIONAL PSRM TO BE INSTALLED			
				TOTAL	
				SAY	

PROJECT REFERENCE NO.	SHEET NO.
I7BPJ4.RJ35; I7BPJ4.RJ36	EC-4
R/W SHEET NO.	
ROADWAY DESIGN ENGINEER	HYDRAULICS ENGINEER

WATTLE WITH POLYACRYLAMIDE DETAIL

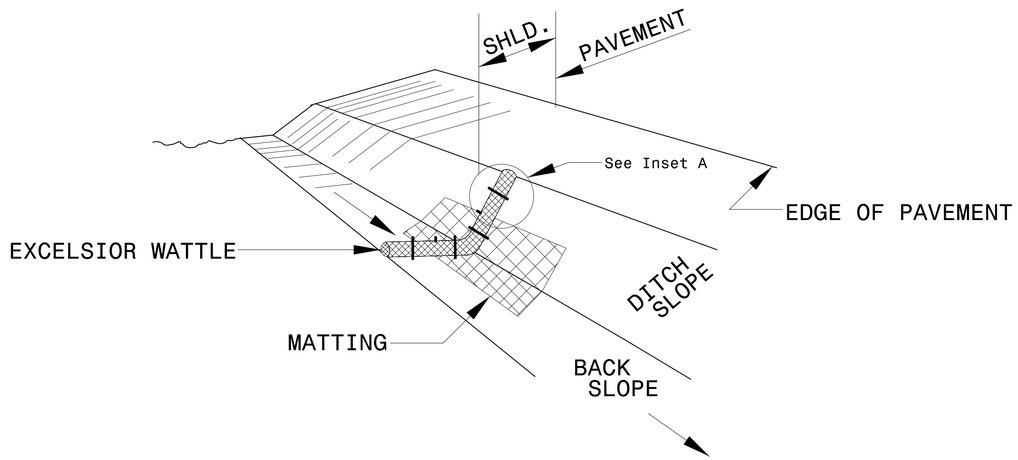

ISOMETRIC VIEW

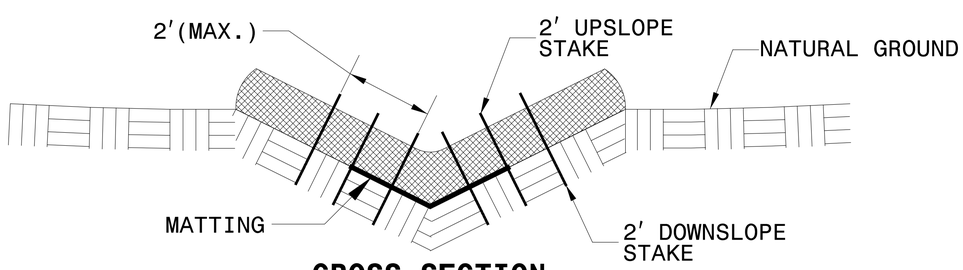

CROSS SECTION VEE DITCH

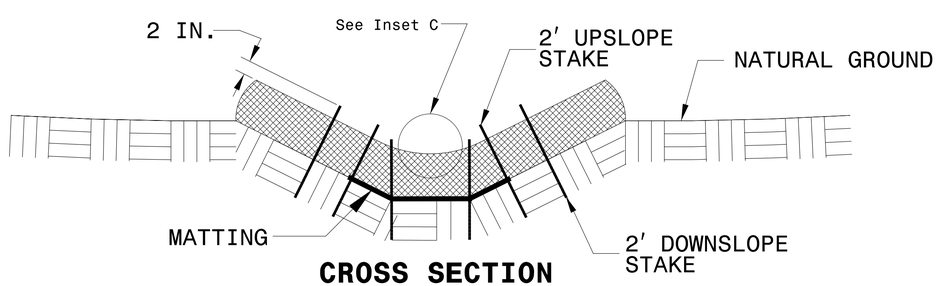

CROSS SECTION TRAPEZOIDAL DITCH

NOTES:

USE MINIMUM 12 IN. DIAMETER EXCELSIOR WATTLE.

USE 2 FT. WOODEN STAKES WITH A 2 IN. BY 2 IN. CROSS SECTION.

ONLY INSTALL WATTLE(S) TO A HEIGHT IN DITCH SO FLOW WILL NOT WASH AROUND WATTLE AND SCOUR DITCH SLOPES AND AS DIRECTED.

INSTALL A MINIMUM OF 2 UPSLOPE STAKES AND 4 DOWNSLOPE STAKES AT AN ANGLE TO WEDGE WATTLE TO BOTTOM OF DITCH.

PROVIDE STAPLES MADE OF 0.125 IN. DIAMETER STEEL WIRE FORMED INTO A U SHAPE NOT LESS THAN 12″ IN LENGTH.

INSTALL STAPLES APPROXIMATELY EVERY 1 LINEAR FOOT ON BOTH SIDES OF WATTLE AND AT EACH END TO SECURE IT TO THE SOIL.

INSTALL MATTING IN ACCORDANCE WITH SECTION 1631 OF THE STANDARD SPECIFICATIONS.

PRIOR TO POLYACRYLAMIDE (PAM) APPLICATION, OBTAIN A SOIL SAMPLE FROM PROJECT LOCATION, AND FROM OFFSITE MATERIAL, AND ANALYZE FOR APPROPRIATE PAM FLOCCULANT TO BE APPLIED TO EACH WATTLE.

INITIALLY APPLY 3.5 OUNCES OF ANIONIC OR NEUTRALLY CHARGED POLYACRYLAMIDE (PAM) OVER WATTLE WHERE WATER WILL FLOW AND AFTER EVERY RAINFALL EVENT THAT IS EQUAL TO OR EXCEEDS 0.50 IN.

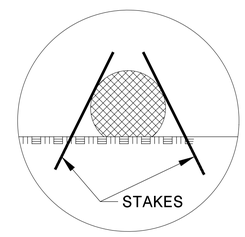

INSET A

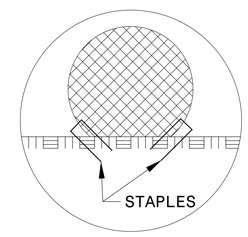

INSET B

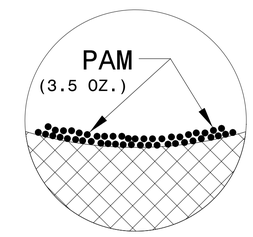

INSET C

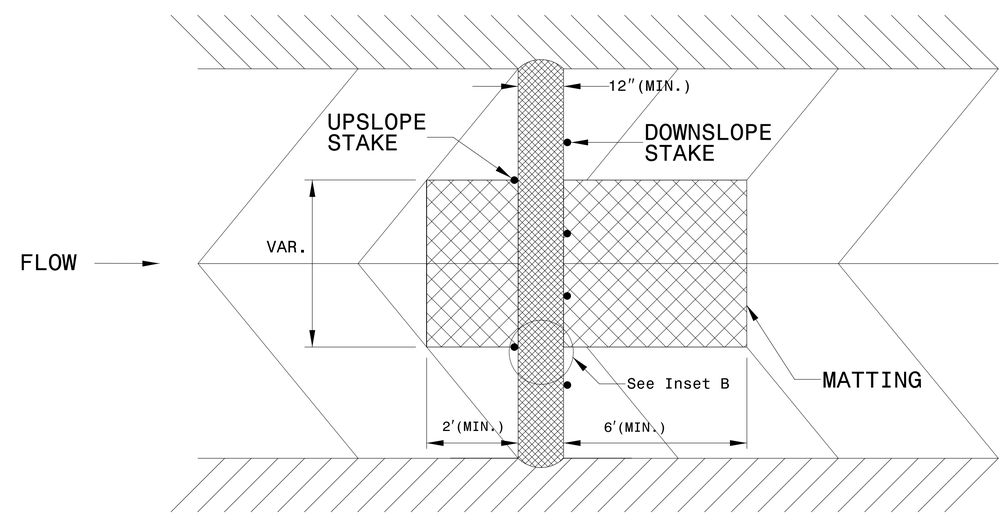

TOP VIEW

PROJECT REFERENCE NO.	SHEET NO.
I7BPJ4.RJ35; I7BPJ4.RJ36	EC-5
R/W SHEET NO.	
ROADWAY DESIGN ENGINEER	HYDRAULICS ENGINEER

WATTLE BARRIER DETAIL

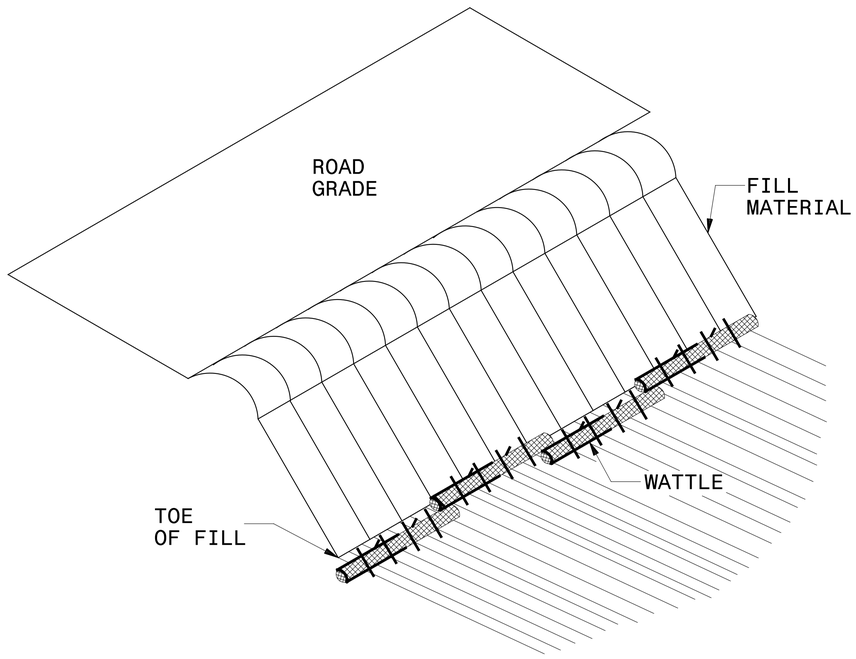

ISOMETRIC VIEW

NOTES:

USE MINIMUM 12 IN. DIAMETER EXCELSIOR WATTLE AND LENGTH OF 10 FT.

EXCAVATE A 1 TO 2 INCH TRENCH FOR WATTLE TO BE PLACED.

DO NOT PLACE WATTLES ON TOE OF SLOPE.

USE 2 FT. WOODEN STAKES WITH A 2 IN. BY 2 IN. NOMINAL CROSS SECTION.

INSTALL A MINIMUM OF 2 UPSLOPE STAKES AND 4 DOWNSLOPE STAKES AT AN ANGLE TO WEDGE WATTLE TO GROUND.

PROVIDE STAPLES MADE OF 0.125 IN. DIAMETER STEEL WIRE FORMED INTO A U SHAPE NOT LESS THAN 12″ IN LENGTH.

INSTALL STAPLES APPROXIMATELY EVERY 1 LINEAR FOOT ON BOTH SIDES OF WATTLE AND AT EACH END TO SECURE IT TO THE SOIL.

FOR BREAKS ALONG LARGE SLOPES, USE MAXIMUM SPACING OF 20 FT.

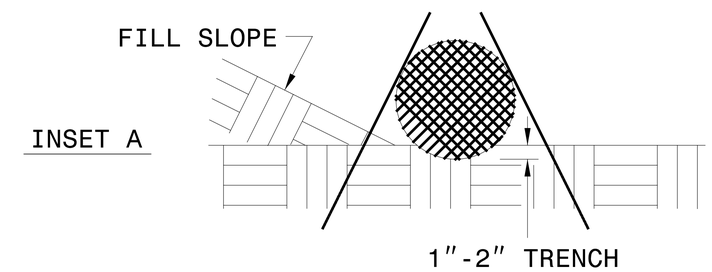

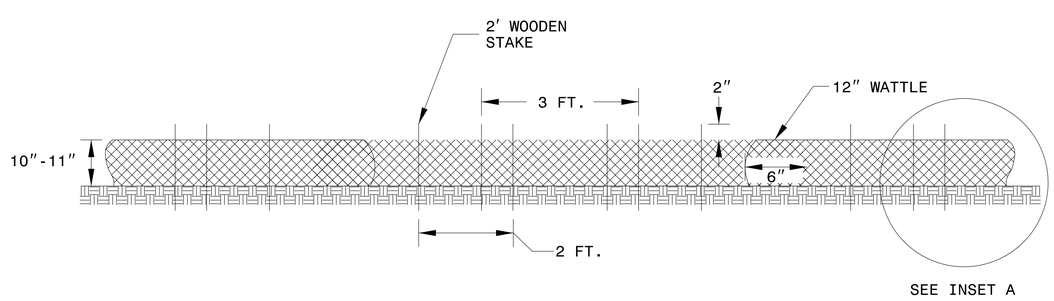

FRONT VIEW

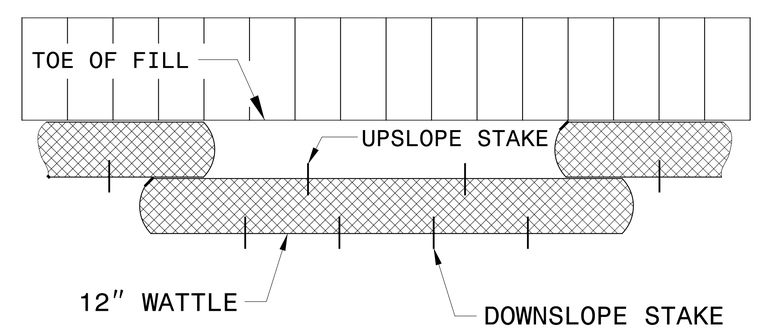

TOP VIEW

PROJECT REFERENCE NO.	SHEET NO.
17BP.14.R.135; 17BP.14.R.136	EC-6
R/W SHEET NO.	
ROADWAY DESIGN ENGINEER	HYDRAULICS ENGINEER

SILT FENCE WATTLE BREAK DETAIL

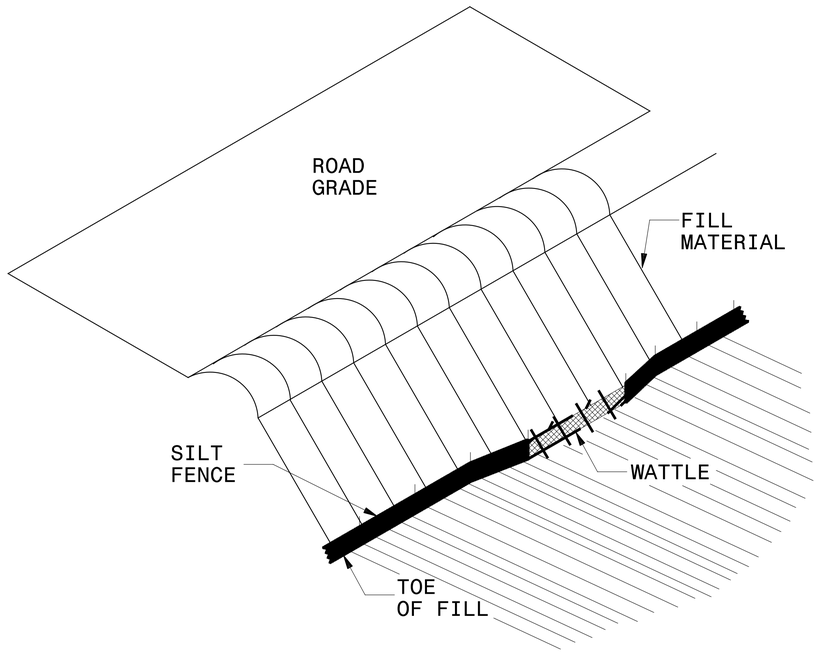

ISOMETRIC VIEW

NOTES:

USE MINIMUM 12 IN. DIAMETER EXCELSIOR WATTLE AND LENGTH OF 10 FT.

EXCAVATE A 1 TO 2 INCH TRENCH FOR WATTLE TO BE PLACED.

DO NOT PLACE WATTLE ON TOE OF SLOPE.

USE 2 FT. WOODEN STAKES WITH A 2 IN. BY 2 IN. NOMINAL CROSS SECTION.

INSTALL A MINIMUM OF 2 UPSLOPE STAKES AND 4 DOWNSLOPE STAKES AT AN ANGLE TO WEDGE WATTLE TO GROUND.

PROVIDE STAPLES MADE OF 0.125 IN. DIAMETER STEEL WIRE FORMED INTO A U SHAPE NOT LESS THAN 12″ IN LENGTH.

INSTALL STAPLES APPROXIMATELY EVERY 1 LINEAR FOOT ON BOTH SIDES OF WATTLE AND AT EACH END TO SECURE IT TO THE SOIL.

WATTLE INSTALLATION CAN BE ON OUTSIDE OF THE SILT FENCE AS DIRECTED.

INSTALL TEMPORARY SILT FENCE IN ACCORDANCE WITH SECTION 1605 OF THE STANDARD SPECIFICATIONS.

INSET A

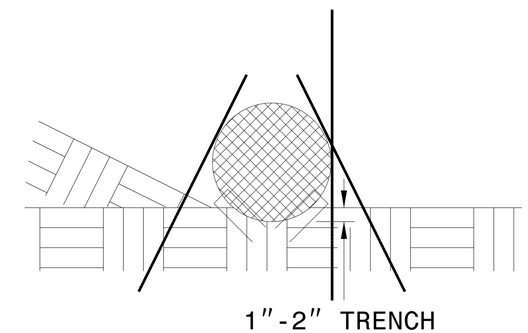

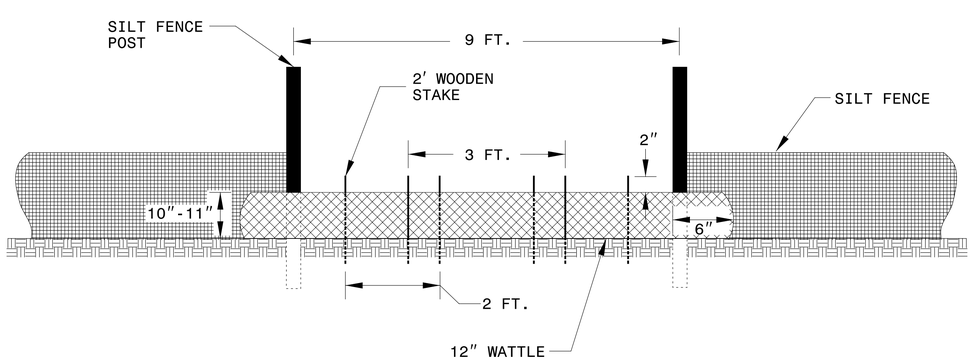

VIEW FROM SLOPE

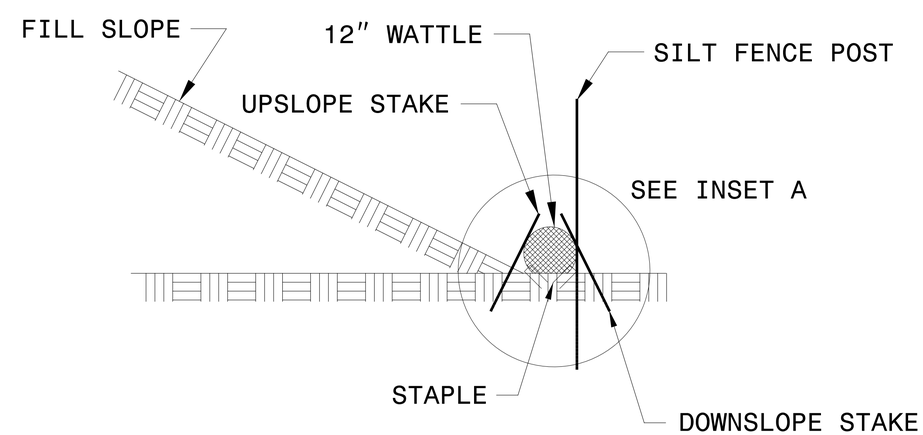

SIDE VIEW

09/05/13

CONTRACT: PROJECT: 17BP.14.R.135; 17BP.14.R.136

T.I.P. NO.	SHEET NO.
17BP.14.R.135; 17BP.14.R.136	UO–1

STATE OF NORTH CAROLINA
DIVISION OF HIGHWAYS

UTILITIES BY OTHERS
TRANSYLVANIA COUNTY

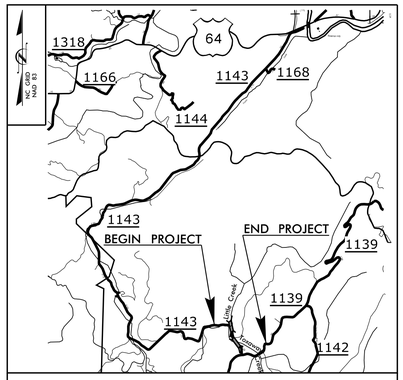

VICINITY MAP

LOCATION: BRIDGE NO. 138 OVER TOXAWAY CREEK AND BRIDGE NO. 205 OVER LITTLE CREEK ON SR 1143 (FROZEN CREEK RD)

TYPE OF WORK: AERIAL POWER AND AERIAL & UNDERGROUND TELEPHONE

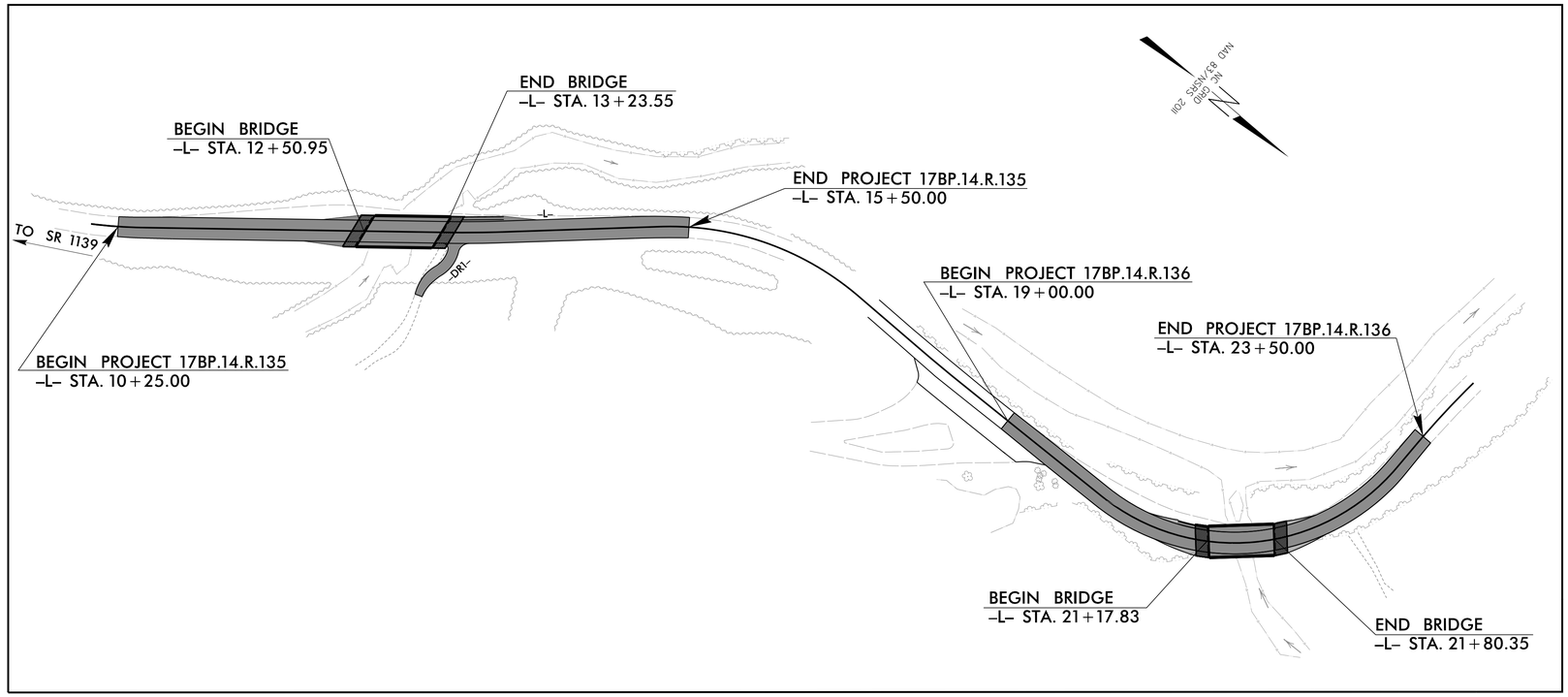

GRAPHIC SCALES

20 10 0 20 40
PLANS

INDEX OF SHEETS

SHEET NO.	DESCRIPTION
UO–1	TITLE SHEET
UO–2	UTILITIES BY OTHERS PLAN SHEET

UTILITY OWNERS ON PROJECT

(1) POWER – HAYWOOD EMC

(2) TELEPHONE – COMPORIUM

PLANS PREPARED BY:

V&M
Vaughn & Melton
Consulting Engineers
1318-F Patton Ave.
Asheville, NC 28806
828-253-2796

PREPARED FOR THE OFFICE OF:
DIVISION OF HIGHWAYS
UTILITIES ENGINEERING SECTION
1591 MAIL SERVICES CENTER
RALEIGH NC 27699–1591
PHONE (919) 250–4128
FAX (919) 250–4119

Roger Worthington, P.E. — UTILITIES SECTION ENGINEER
Xxxxx Xxxxx, P.E. — UTILITIES SQUAD LEADER PROJECT ENGINEER
Lynn Mann, P.G. — UTILITIES PROJECT DESIGNER

V&M PROJECT #3235-06
TRANSP\3235-06\UTILITIES\BD5114BACUO-1.DGN

PROJECT REFERENCE NO.	SHEET NO.
BD-5114AB; BD-5114AC	U0-2

UTILITIES BY OTHERS

NOTE:
ALL PROPOSED UTILITY WORK SHOWN ON THIS SHEET WILL BE DONE BY OTHERS

UTILITY PLAN FOR PROJECTS BD-5114AB AND BD-5114AC

NOTE: THIS PLAN SHEET IS FOR UTILITY PURPOSES ONLY.
SEE BD-5114AB SHEET 4 & BD-5114AC SHEET 4-A FOR DESIGN DATA.

NAD 83/NSRS 2011
NC GRID

SEE BD-5114AB SHEET 4 FOR DESIGN

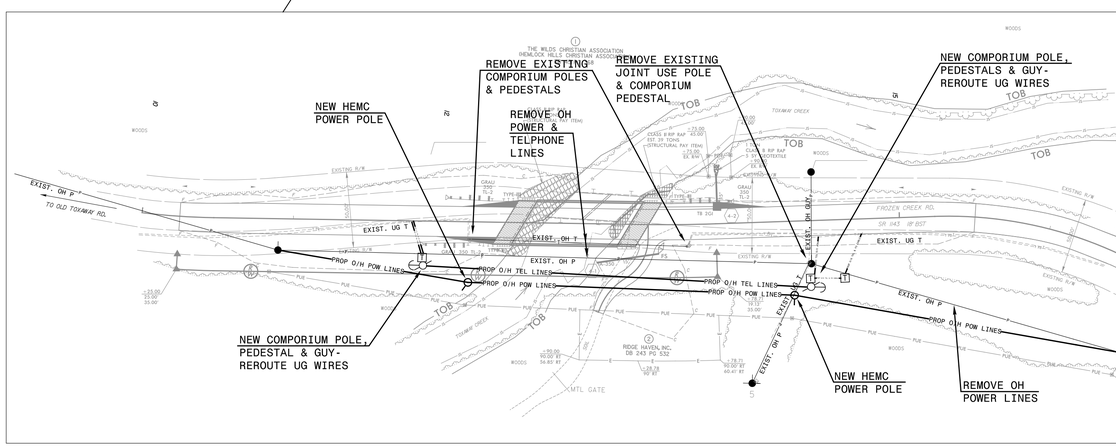

BRIDGE #138
BD-5114AB

SEE BD-5114AC SHEET 4-A FOR DESIGN

UTILITY OWNERS

HAYWOOD ELECTRIC MEMBERSHIP
298 BLUE RIDGE ROAD
LAKE TOXAWAY, NC 28747

COMPORIUM COMMUNICATIONS
190 E. MAIN STREET
BREVARD, NC 28712

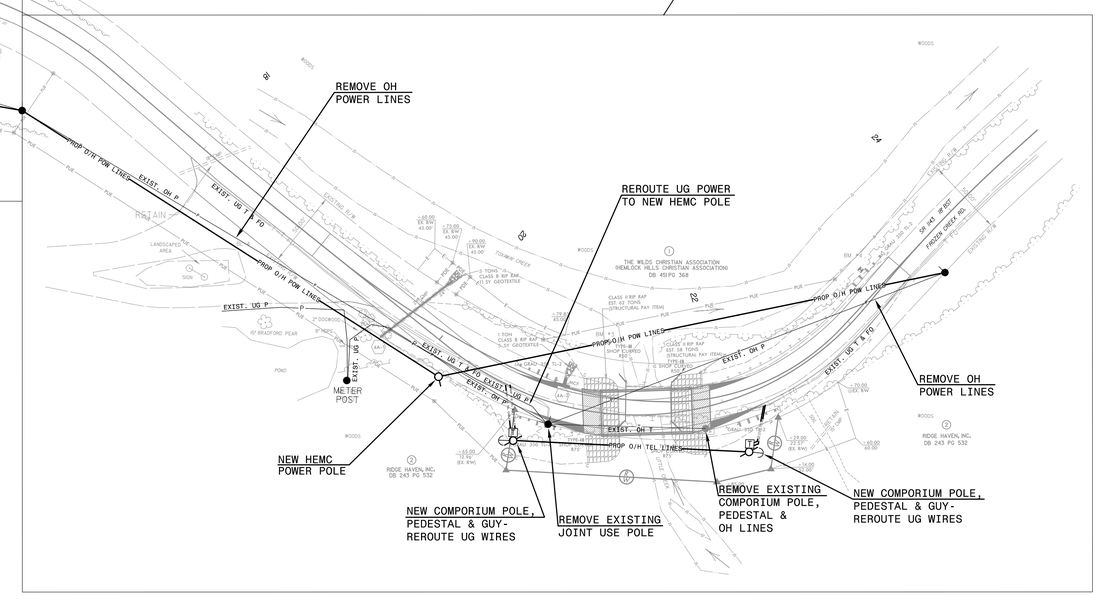

BRIDGE #205
BD-5114AC

REVISIONS

COMPUTED BY: JDD	DATE: 9-8-14
CHECKED BY: WCC	DATE: 9-8-14

PROJECT REFERENCE NO.	SHEET NO.
17BP.14.R.135; 17BP.14.R.136	X-0

DIVISION OF HIGHWAYS
STATE OF NORTH CAROLINA

NORTH CAROLINA PROFESSIONAL SEAL 26960 ENGINEER RICHARD M. SCHULER
DocuSigned by: Richard M. Schuler
10/22/2015

CROSS SECTION SUMMARY

IN CUBIC YARDS

PROJECT 17BP.14.R.135

-L- LOCATION	UNCLASSIFIED EXCAVATION	EMBT
10+25	0	0
10+50	11	2
10+75	21	4
11+00	42	4
11+25	58	3
11+50	70	2
11+75	83	1
12+00	79	1
12+25	42	11
12+50	13	16
12+50.95 BEGIN BRIDGE	1	1
13+23.55 END BRIDGE	0	0
13+25	0	1
13+50	1	10
13+75	1	9
14+00	3	10
14+25	4	11
14+50	5	9
14+75	6	7
15+00	6	6
15+25	8	4
15+50	10	1

NOTE: EMBANKMENT COLUMN DOES NOT INCLUDE BACKFILL FOR UNDERCUT.

-DR1- LOCATION	UNCLASSIFIED EXCAVATION	EMBT
10+00	61	0
10+10	77	0
10+20	98	0
11+30	102	1
10+40	65	1
10+50	0	3
10+60	0	0

PROJECT 17BP.14.R.136

-L- LOCATION	UNCLASSIFIED EXCAVATION	EMBT
19+00	0	0
19+25	5	0
19+50	9	1
19+75	8	3
20+00	8	8
20+25	10	13
20+50	11	19
20+75	33	24
21+00	42	32
21+17.83 BEGIN BRIDGE	22	28
21+80.35 END BRIDGE	0	0
22+00	0	62
22+25	0	48
22+50	0	22
22+75	0	17
23+00	0	14
23+25	0	8
23+50	1	3

NOTE: EMBANKMENT COLUMN DOES NOT INCLUDE BACKFILL FOR UNDERCUT.

Approximate quantities only. Unclassified excavation, borrow excavation, fine grading, clearing and grubbing, and removal of existing pavement will be paid for at the contract lump sum price for "grading".

8/23/99

0 2.5 5	PROJ. REFERENCE NO.	SHEET NO.
	17BP.14.R.135	X-1

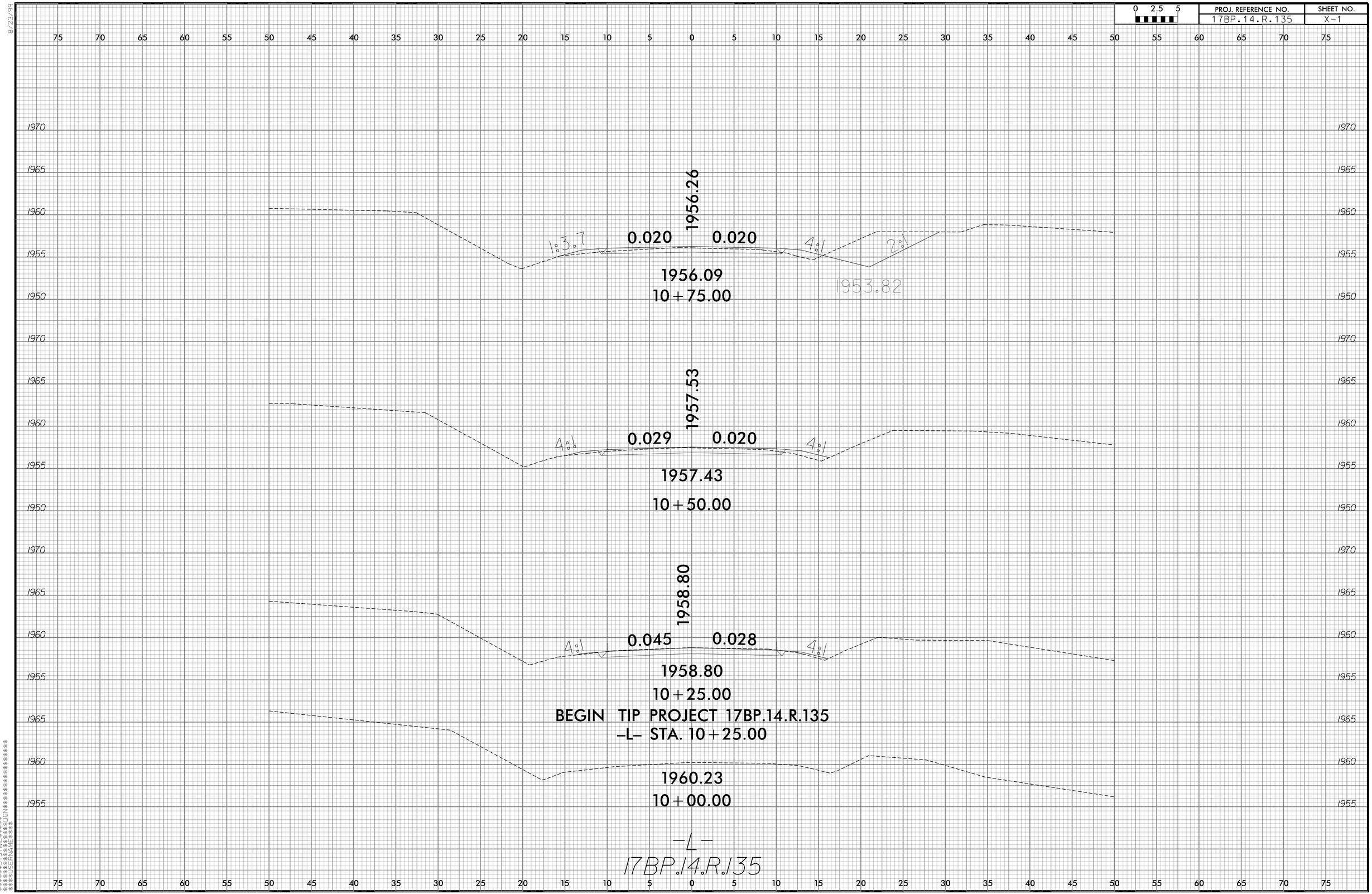

$$$$SYSTIME$$$$
$$$$DGN$$$$
$$$$DGNNAME$$$$

8/23/99

0 2.5 5	PROJ. REFERENCE NO.	SHEET NO.
	17BP.14.R.135	X-2

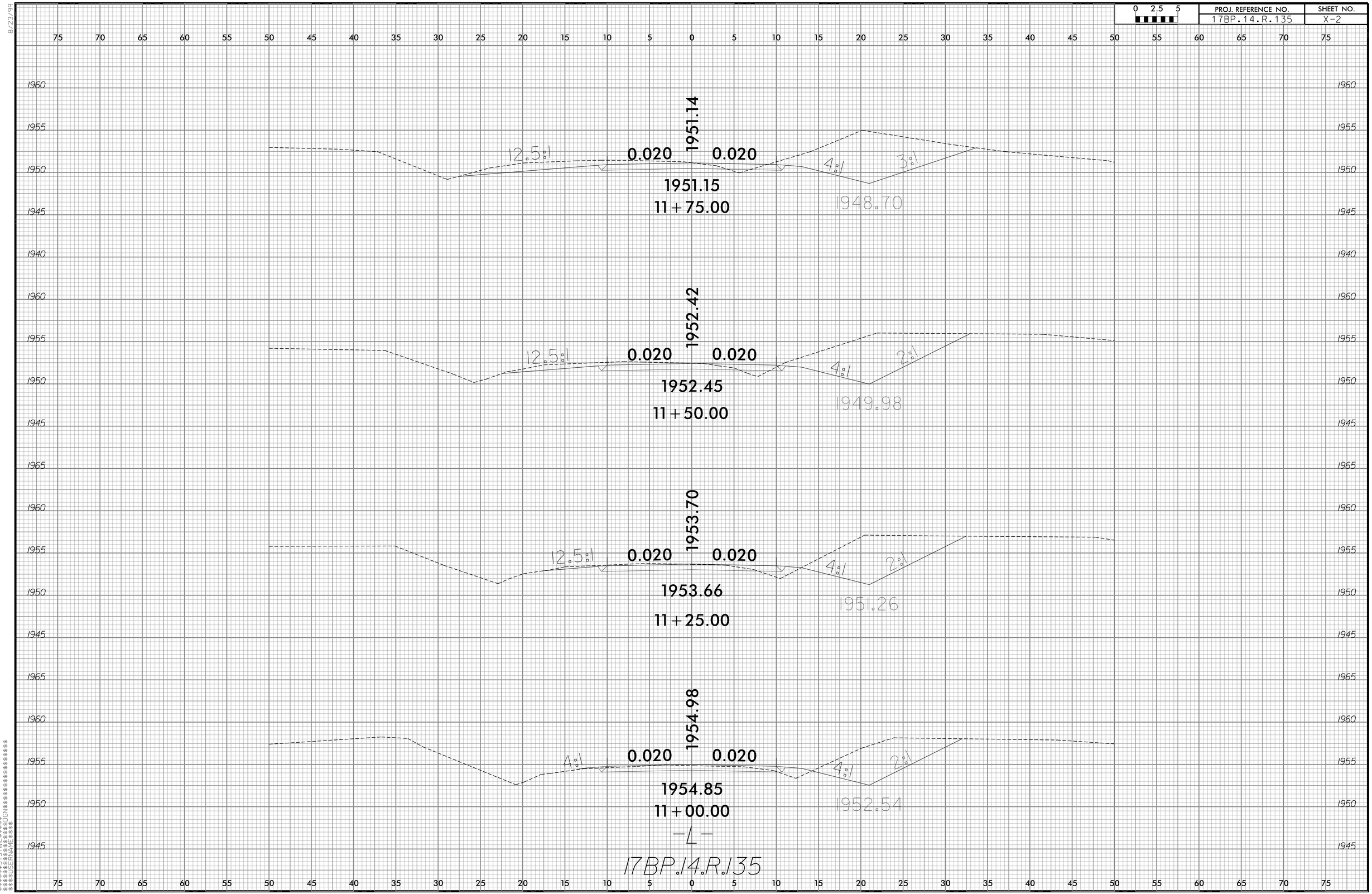

$$$$SYSTIME$$$$
$$$$DUN$$$$
$$$$TIME$$$$
$$$$NAME$$$$
$$$$ENAME$$$$

8/23/99

0 2.5 5	PROJ. REFERENCE NO.	SHEET NO.
	17BP.14.R.135	X-3

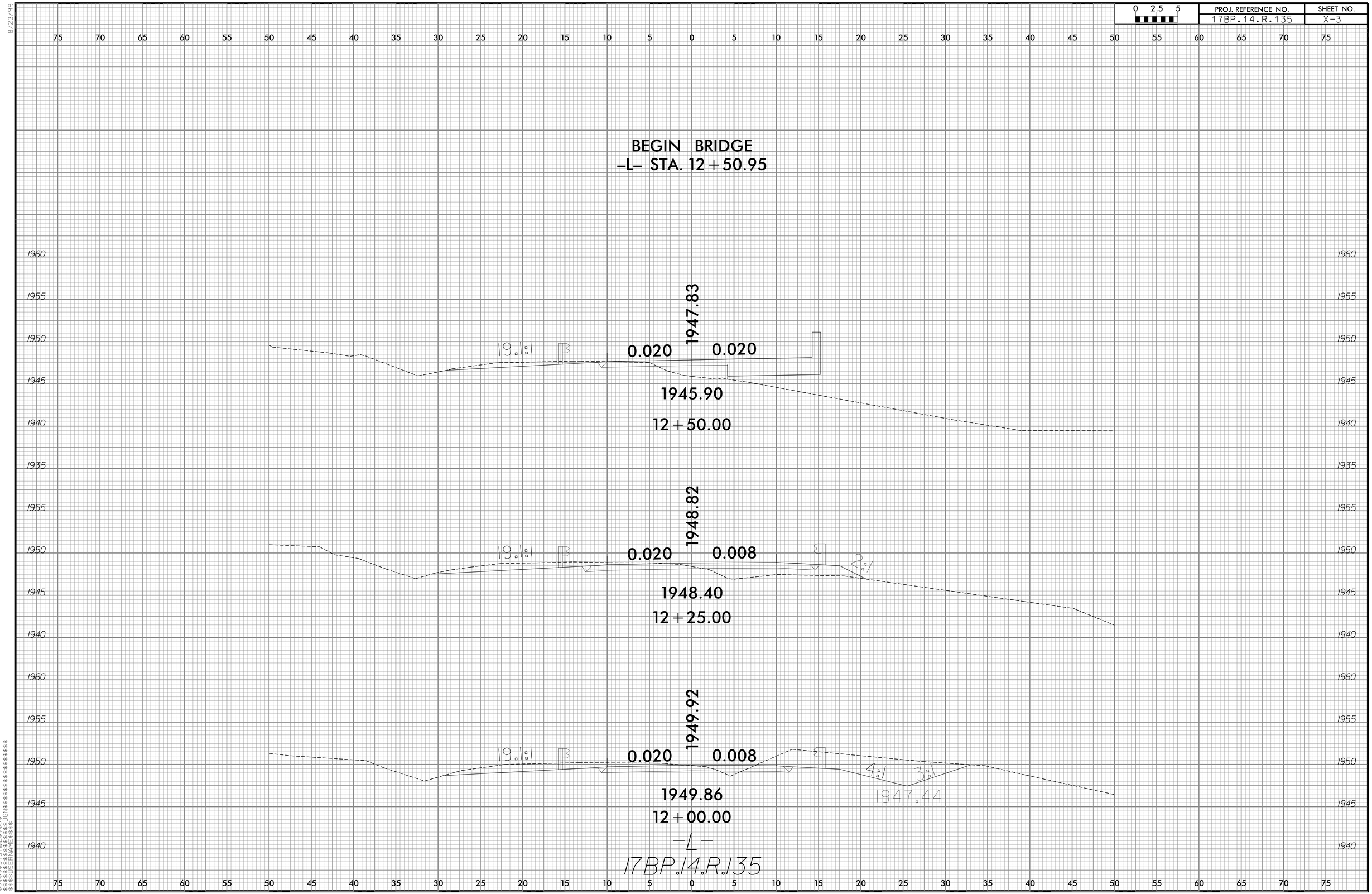

$$$$SYSTIME$$$$
$$$$SUN$$$$
$$$$DATE$$$$
$$$$DGN$$$$

8/23/99

0 2.5 5	PROJ. REFERENCE NO.	SHEET NO.
	17BP.14.R.135	X-4

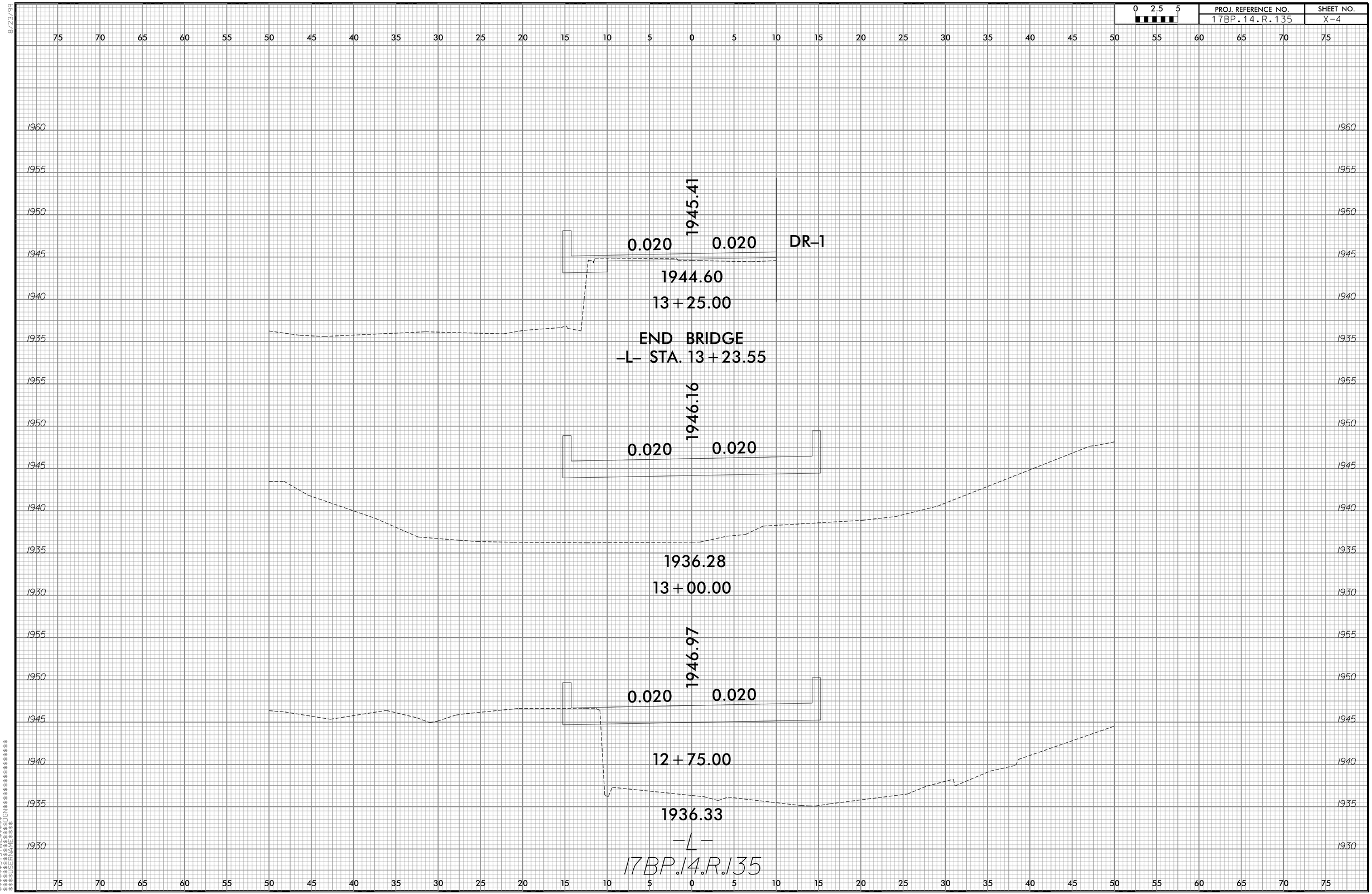

$$$$SYSTIME$$$$
$$$$SUN$$$$
$$$$DATE$$$$
$$$$TIME$$$$

8/23/99

0 2.5 5	PROJ. REFERENCE NO.	SHEET NO.
	17BP.14.R.135	X-5

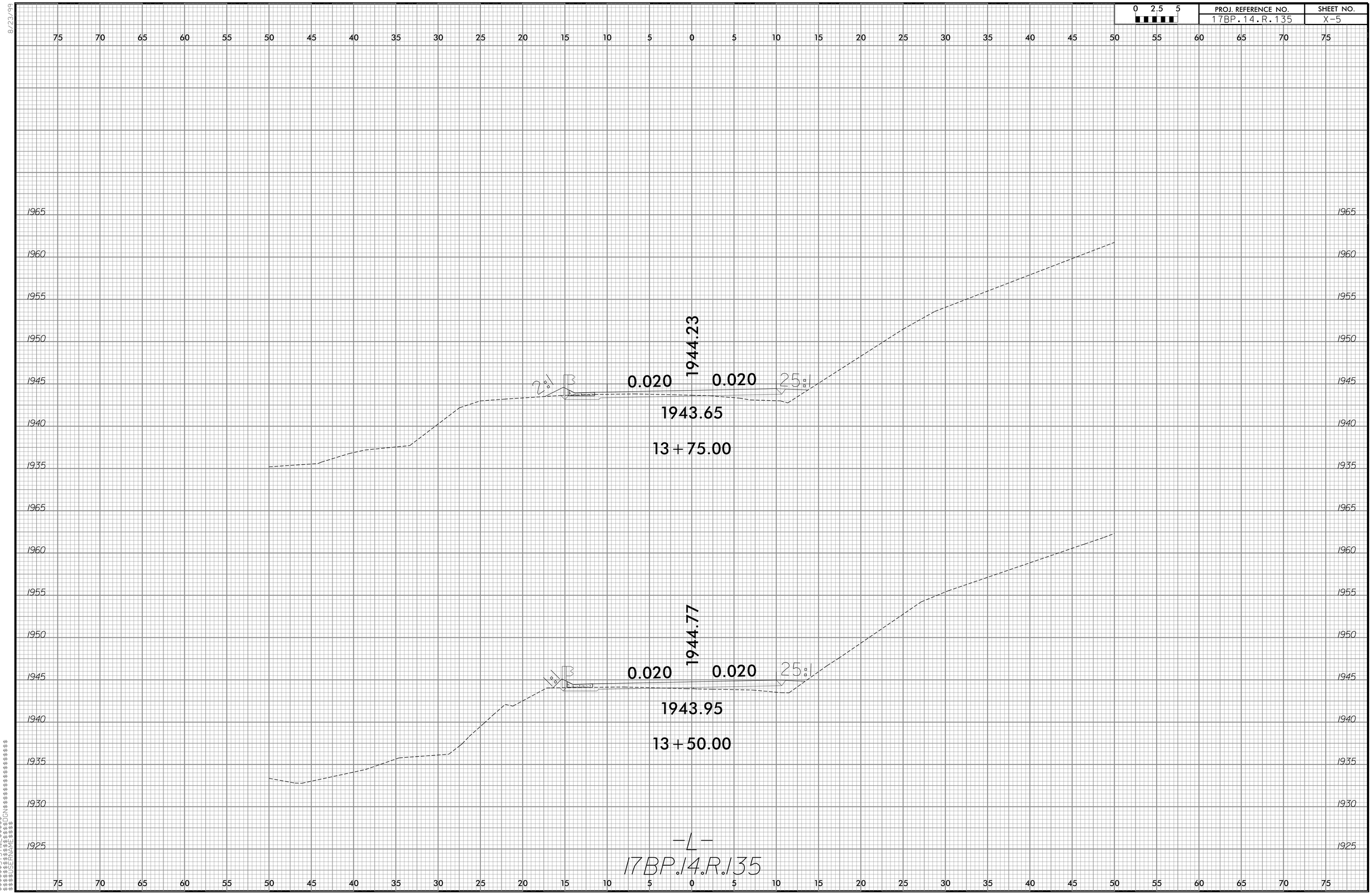

$$$$SYSTIME$$$$
$$$$SUN$$$$
$$$$DATE$$$$
$$$$DATE$$$$

8/23/99

0 2.5 5	PROJ. REFERENCE NO.	SHEET NO.
	17BP.14.R.135	X-6

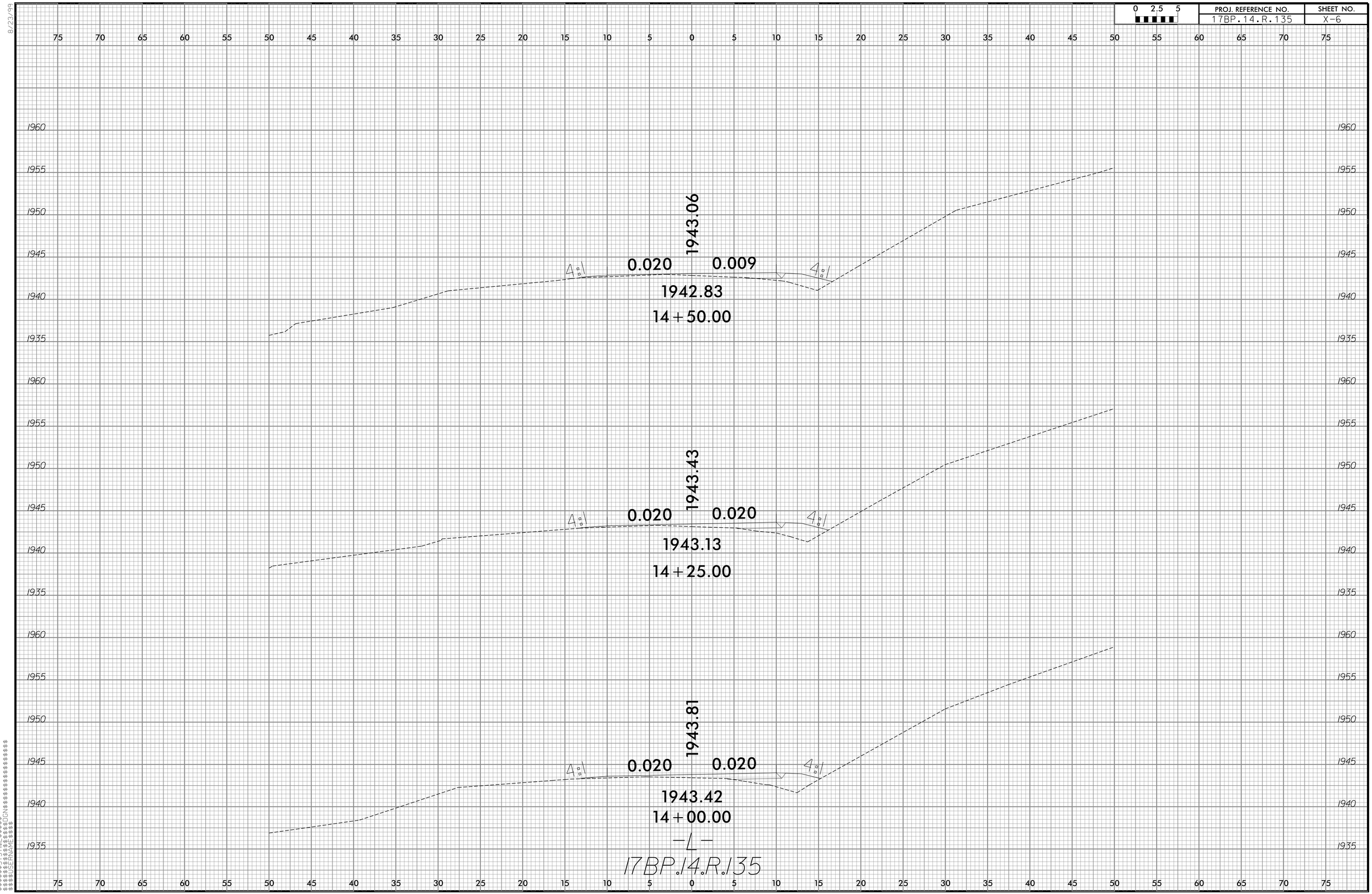

$$$$SYSTIME$$$$
$$$$DUN$$$$
$$$$FNAME$$$$
$$$$DESIGN$$$$

8/23/99

0 2.5 5	PROJ. REFERENCE NO.	SHEET NO.
	17BP.14.R.135	X-7

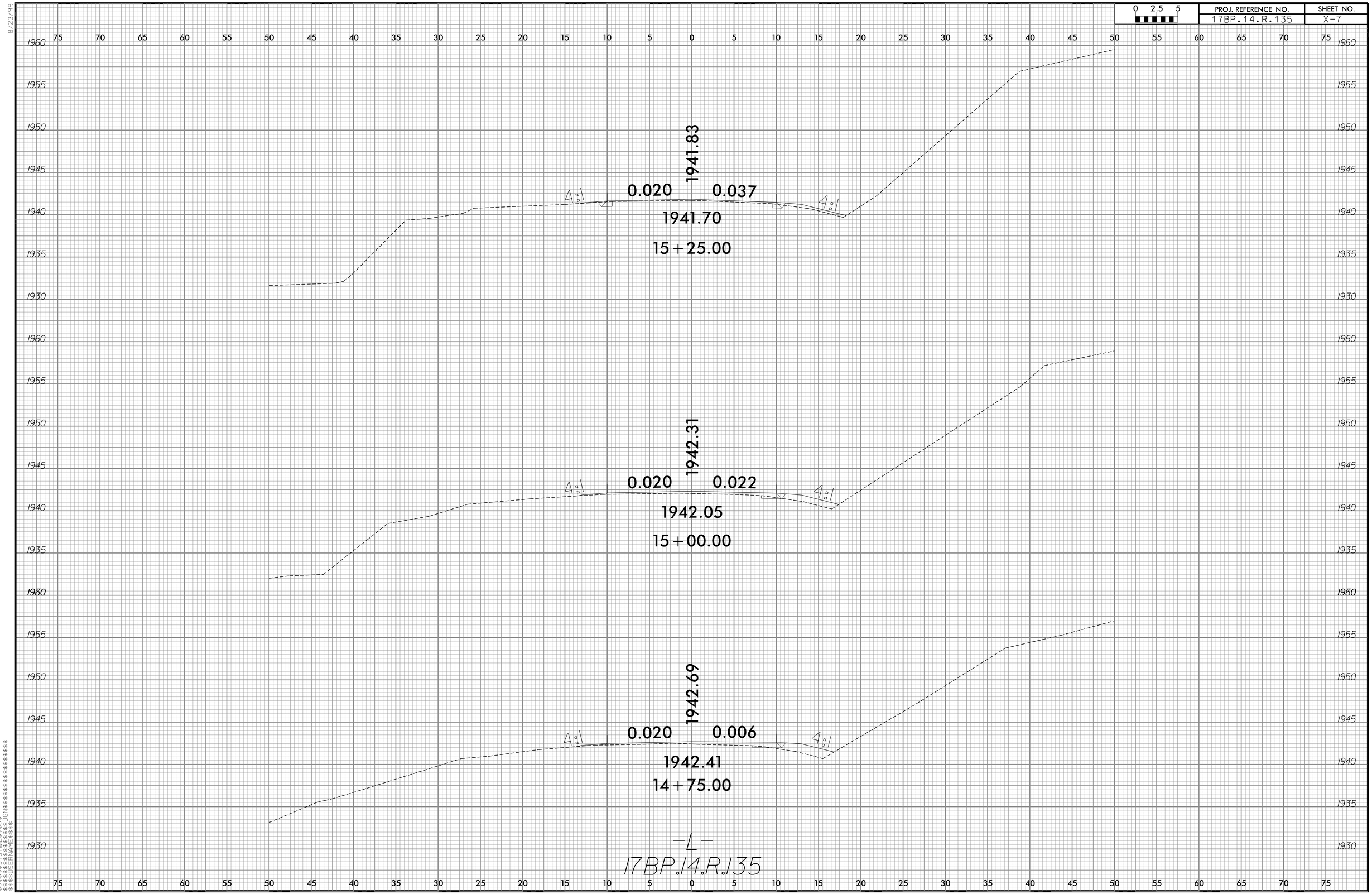

$$$$SYSTIME$$$$
$$$$DWG$$$$
$$$$PAGE$$$$
$$$$ENAME$$$$

8/23/99

0 2.5 5	PROJ. REFERENCE NO.	SHEET NO.
	17BP.14.R.135	X-8

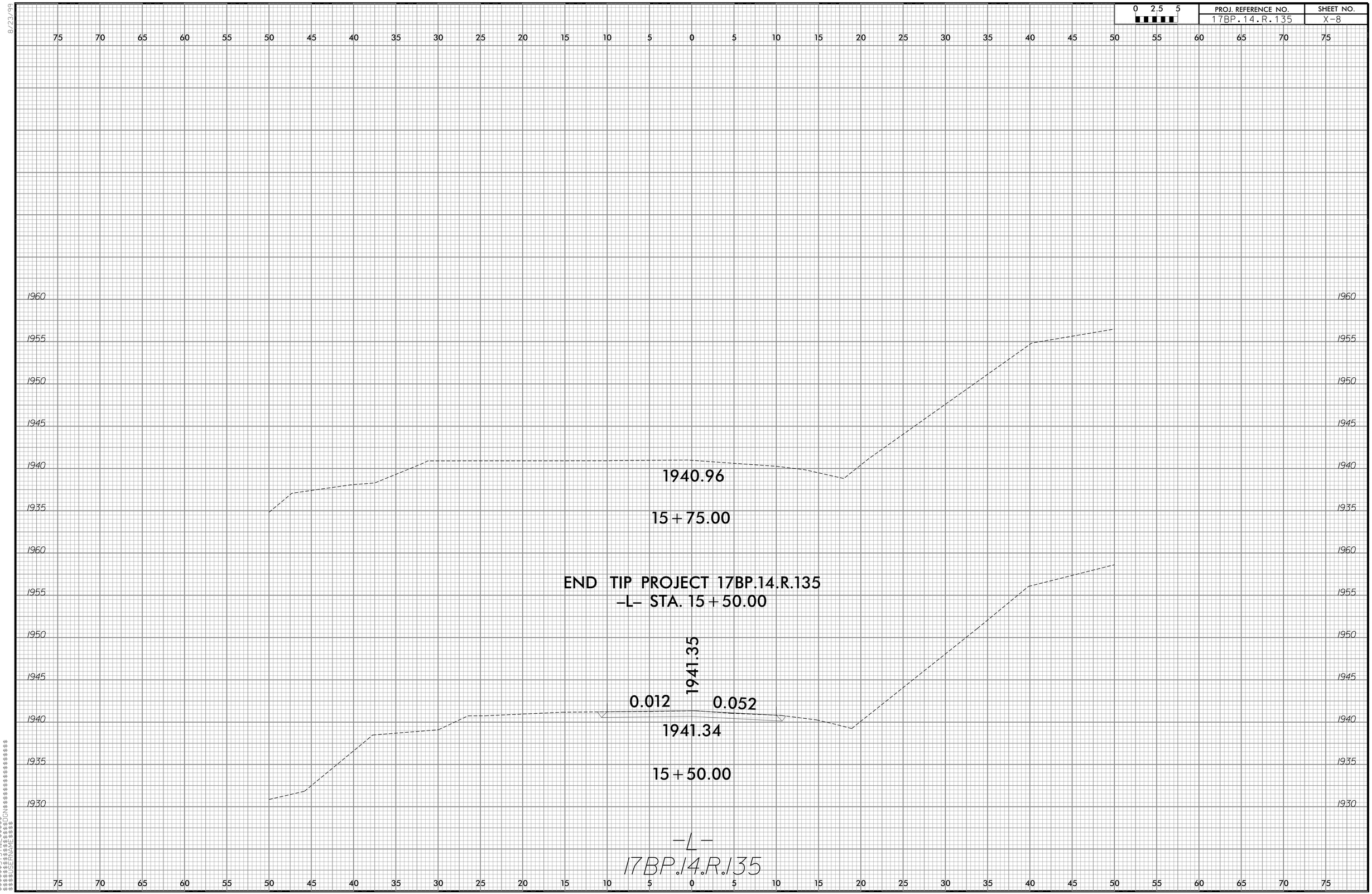

$$$$SYSTIME$$$$
$$$$DUN$$$$
$$$$PAGE$$$$
$$$$ENAME$$$$

0 2.5 5
PROJ. REFERENCE NO.
17BP.14.R.135
SHEET NO.
X-9
1948.26
0.010.01
2:1
1947.25
1948.12
10+10.00
1948.99
0.010.01
2:1
1947.98
1948.99
10+00.00
BEGIN CONSTRUCTION
-DR1- STA. 10+00.00
-DR1-
17BP.14.R.135

8/23/99

0 2.5 5	PROJ. REFERENCE NO.	SHEET NO.
	17BP.14.R.135	X-10

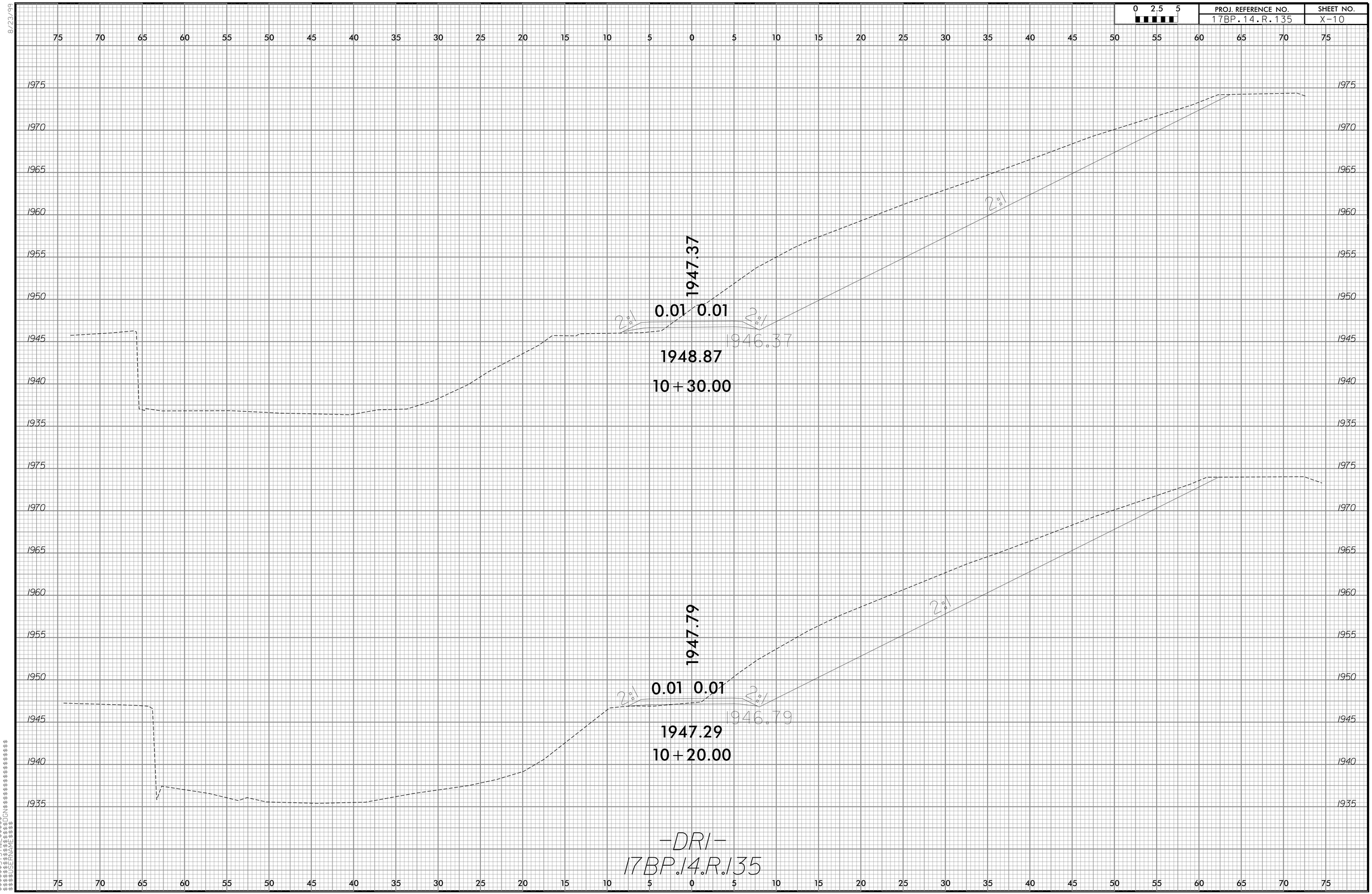

$$$$SYSTIME$$$$
$$$$SUN$$$$
$$$$DATE$$$$
$$$$TIME$$$$

8/23/99

0 2.5 5	PROJ. REFERENCE NO.	SHEET NO.
	17BP.14.R.135	X-11

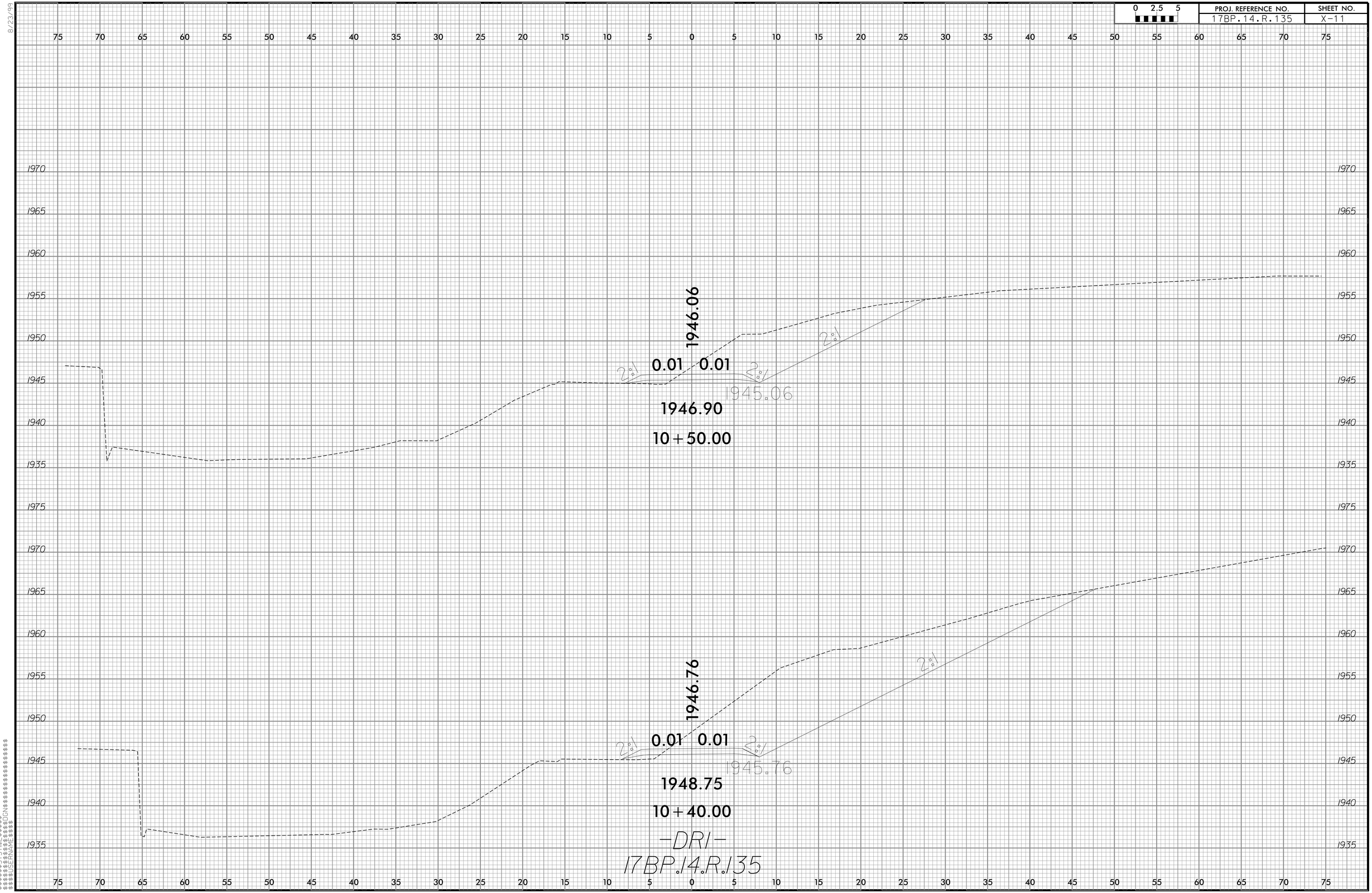

$$$$$$SYSTIME$$$$
$$$$$$SYSDATE$$$$
$$$$$$DWGNAME$$$$
$$$$$$LAYOUT$$$$

8/23/99

0 2.5 5	PROJ. REFERENCE NO.	SHEET NO.
	17BP.14.R.135	X-12

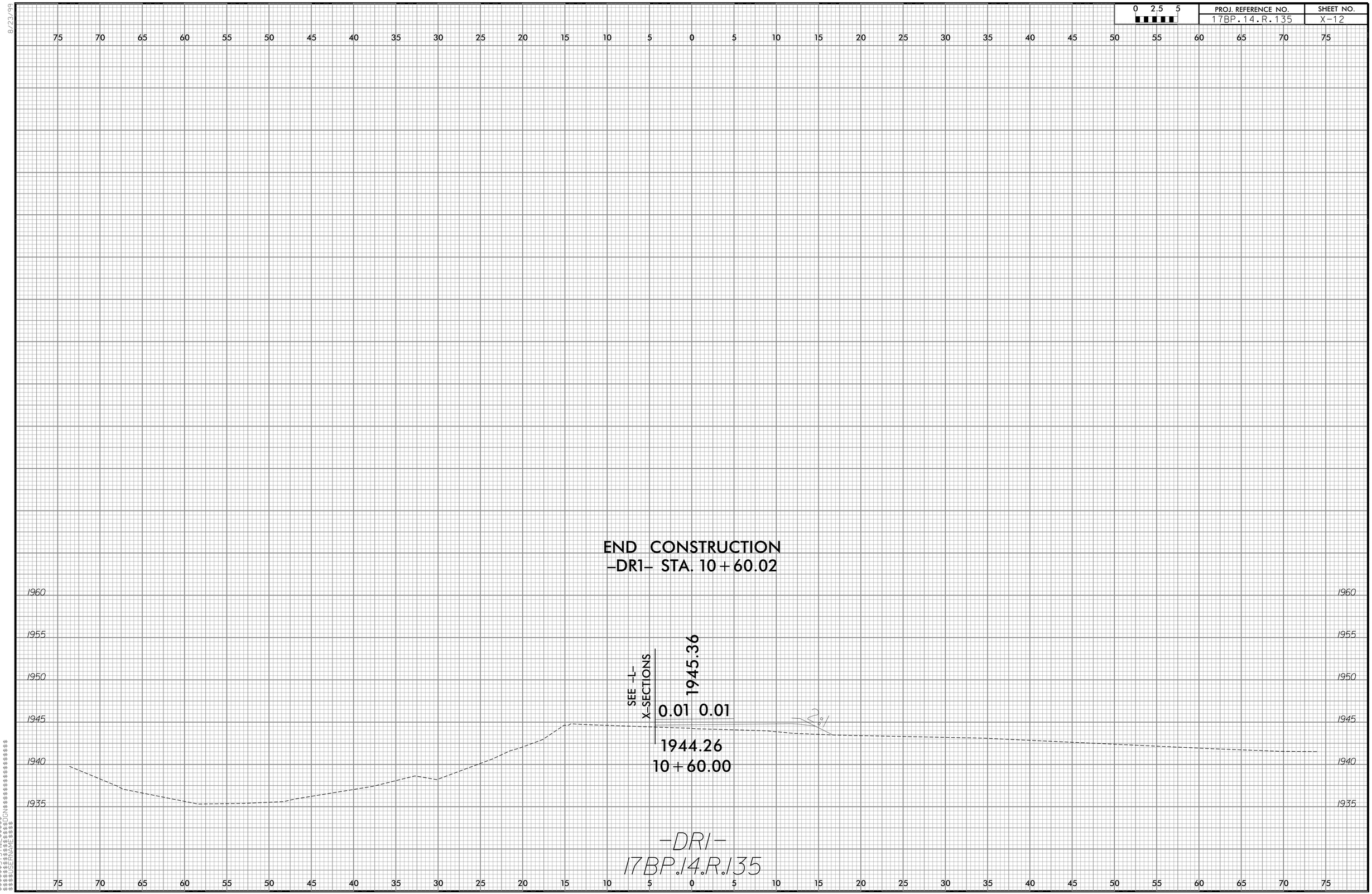

$$$$SYSTIME$$$$
$$$$SUN$$$$
$$$$DATE$$$$
$$$$TIME$$$$

0 2.5 5	PROJ. REFERENCE NO.	SHEET NO.
	17BP.14.R.136	X-13

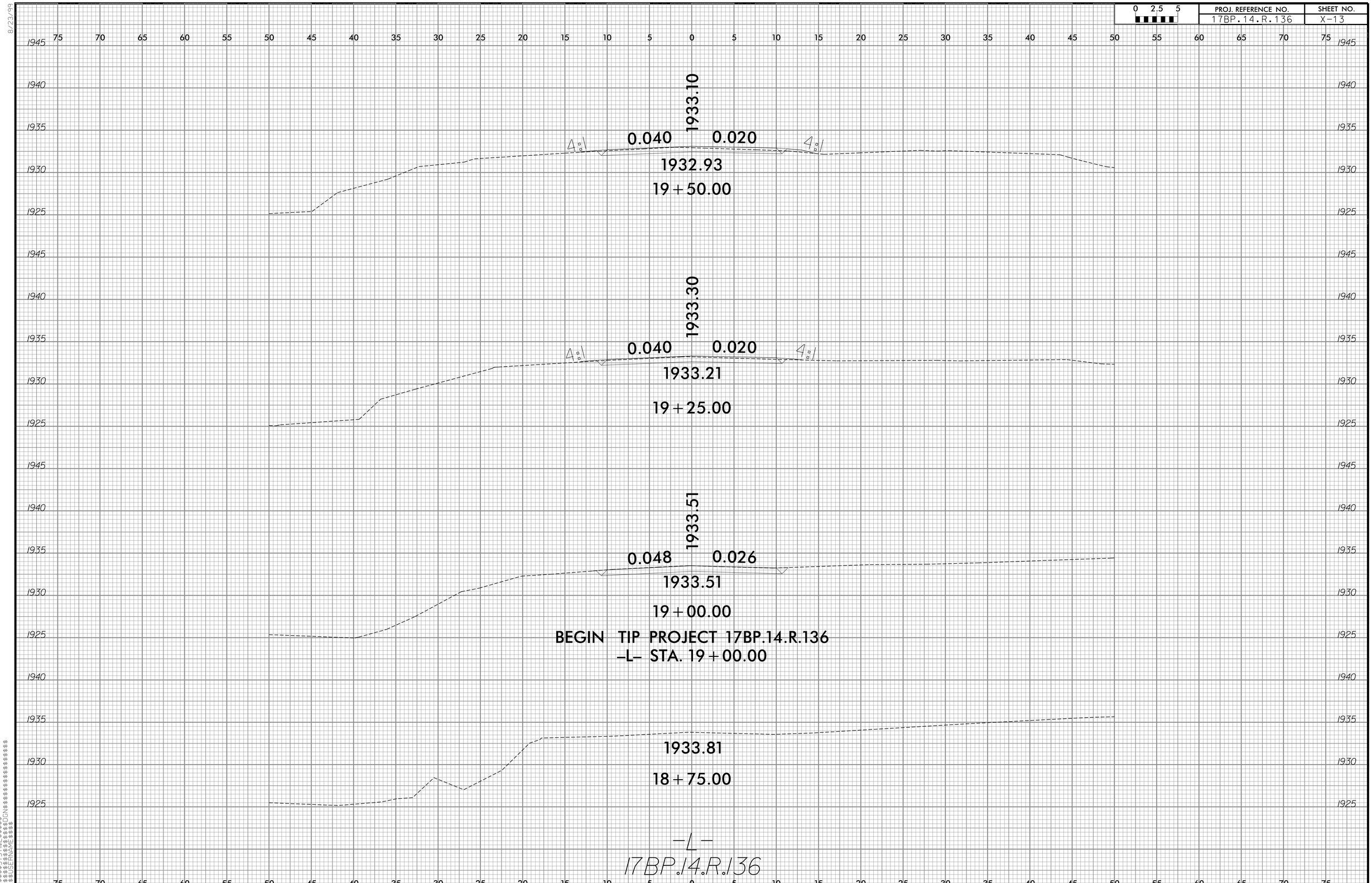

8/23/99

$$$$SYSTIME$$$$
$$$$DGN$$$$
$$$$RAME$$$$
$$$$ENAME$$$$

8/23/99

0 2.5 5	PROJ. REFERENCE NO.	SHEET NO.
	17BP.14.R.136	X-14

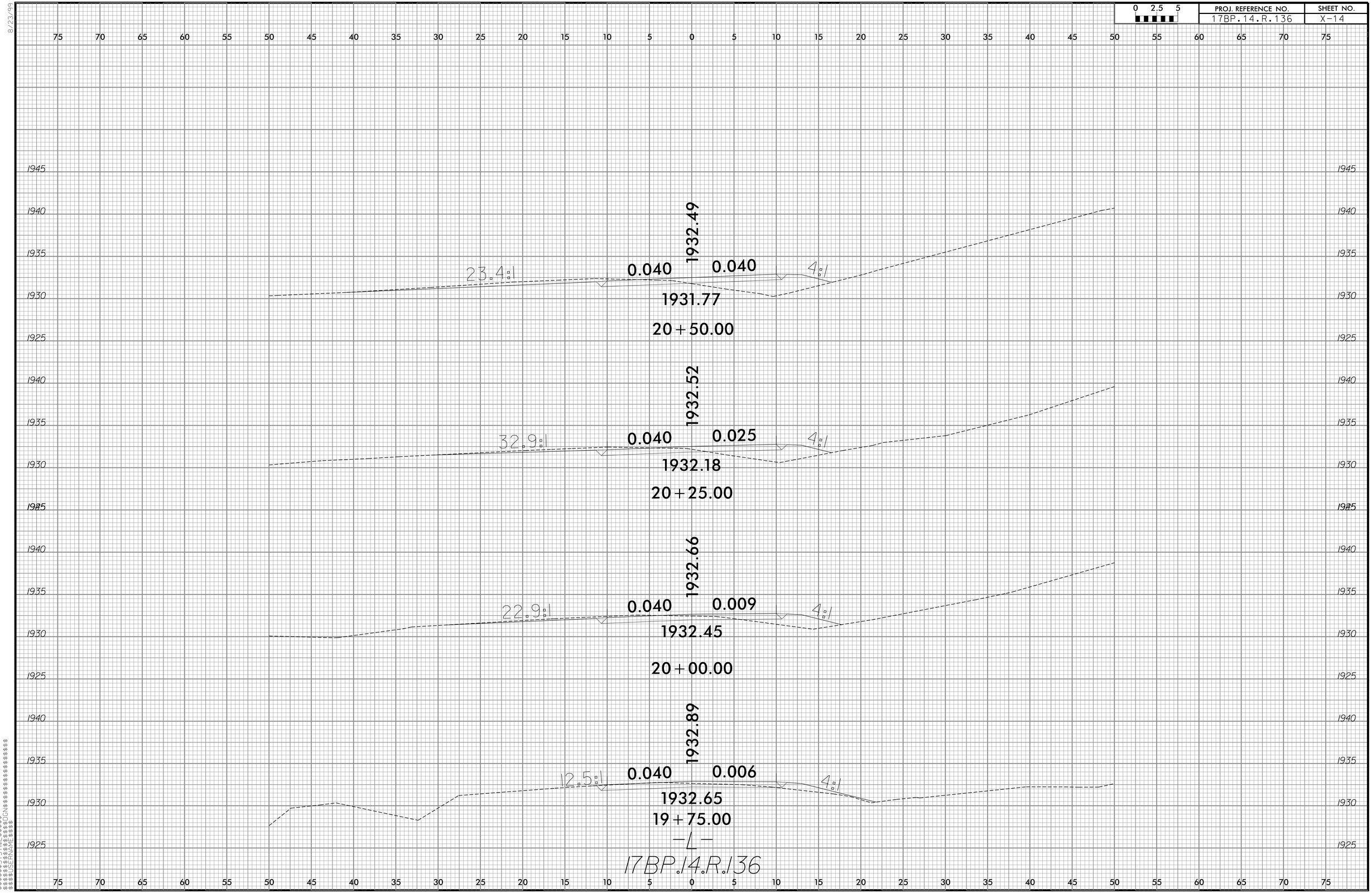

$$$$SYSTIME$$$$
$$$$SYSDATE$$$$
$$$$SYSFRAME$$$$

8/23/99

0 2.5 5	PROJ. REFERENCE NO.	SHEET NO.
	17BP.14.R.136	X-15

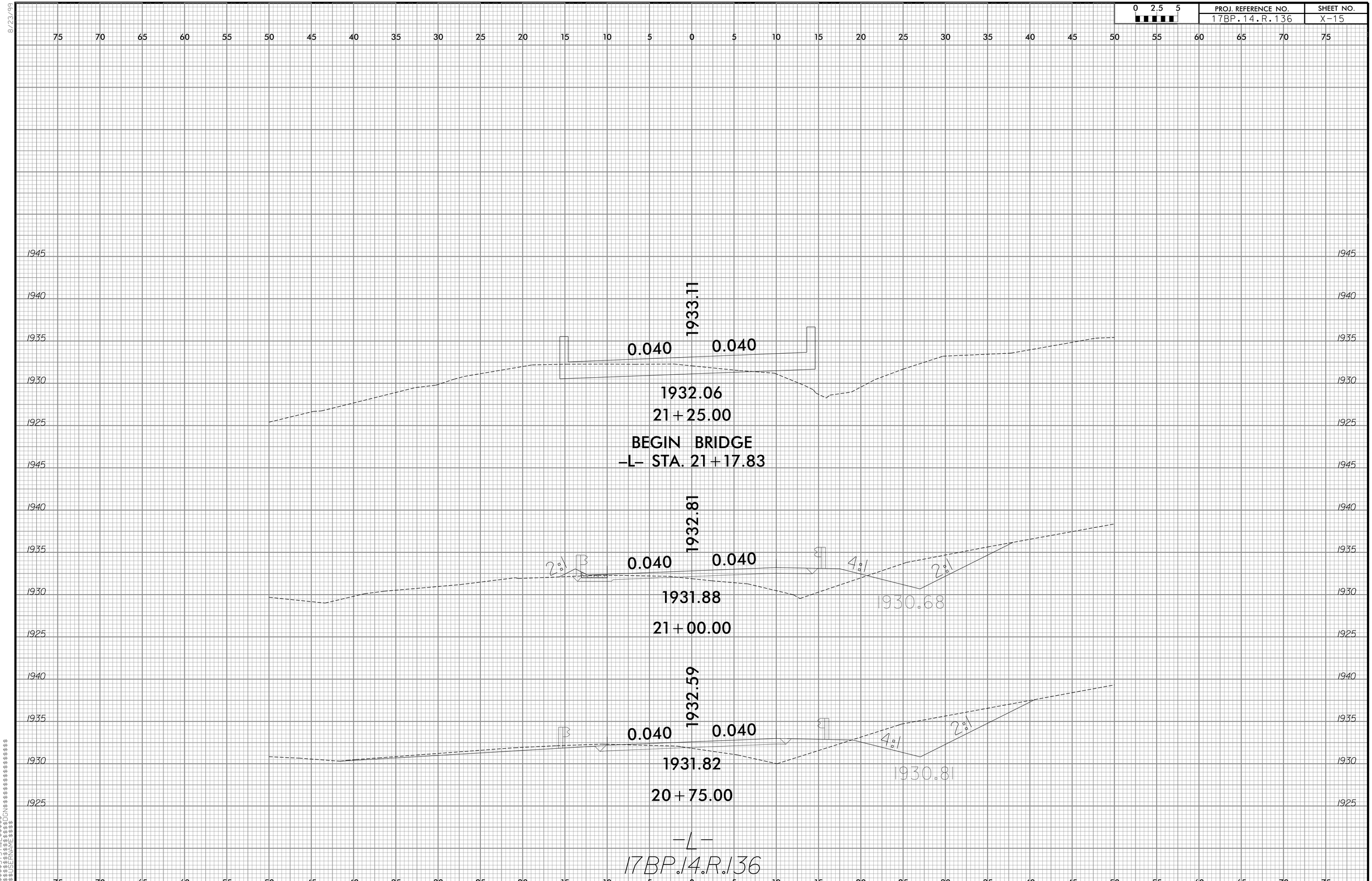

$$$$$$$$SYSTIME$$$$
$$$$$$$$SYSDATE$$$$
$$$$$$$$SPFEN$$$$
$$$$$$$$SPRAME$$$$

0 2.5 5	PROJ. REFERENCE NO.	SHEET NO.
	17BP.14.R.136	X-16

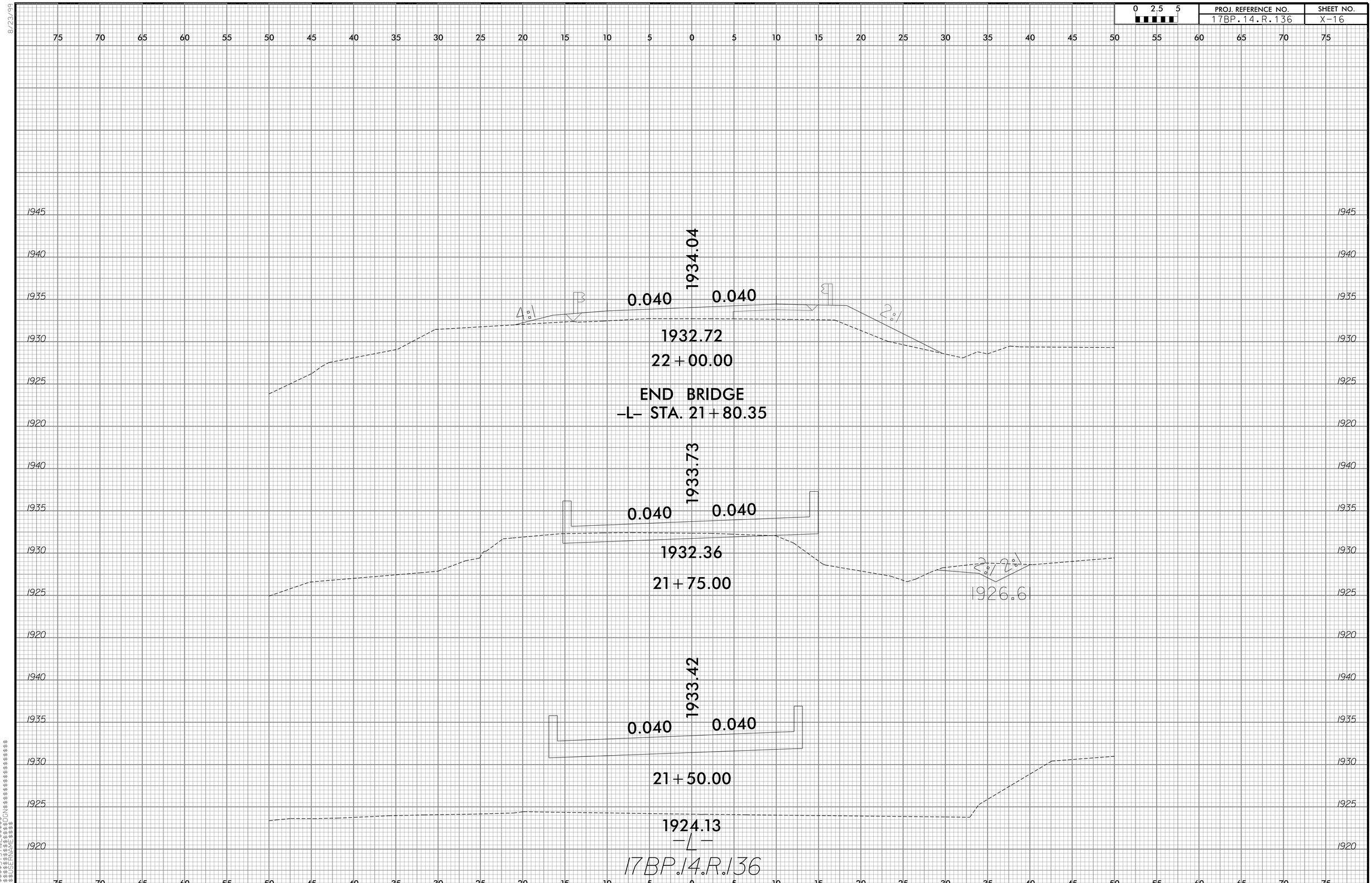

8/23/99

$$$$SYSTIME$$$$
$$$$USER$$$$
$$$$DGN$$$$
$$$$RAN$$$$
$$$$PEN$$$$

8/23/99

0 2.5 5	PROJ. REFERENCE NO.	SHEET NO.
	17BP.14.R.136	X-17

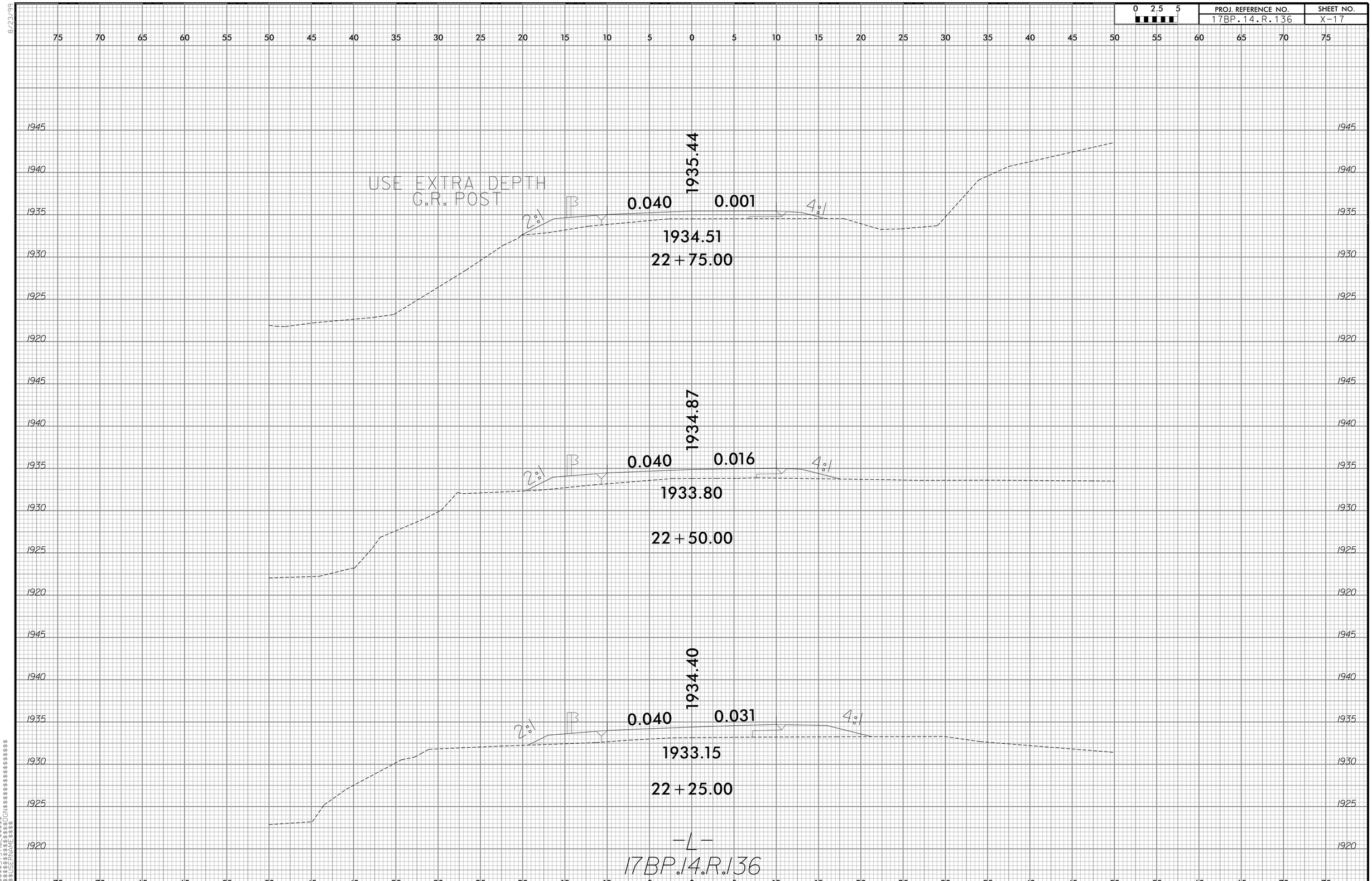

$$$$SYSTIME$$$$
$$$$DUN$$$$
$$$$ENAME$$$$
$$$$CNAME$$$$

8/23/99

0 2.5 5	PROJ. REFERENCE NO.	SHEET NO.
	17BP.14.R.136	X-18

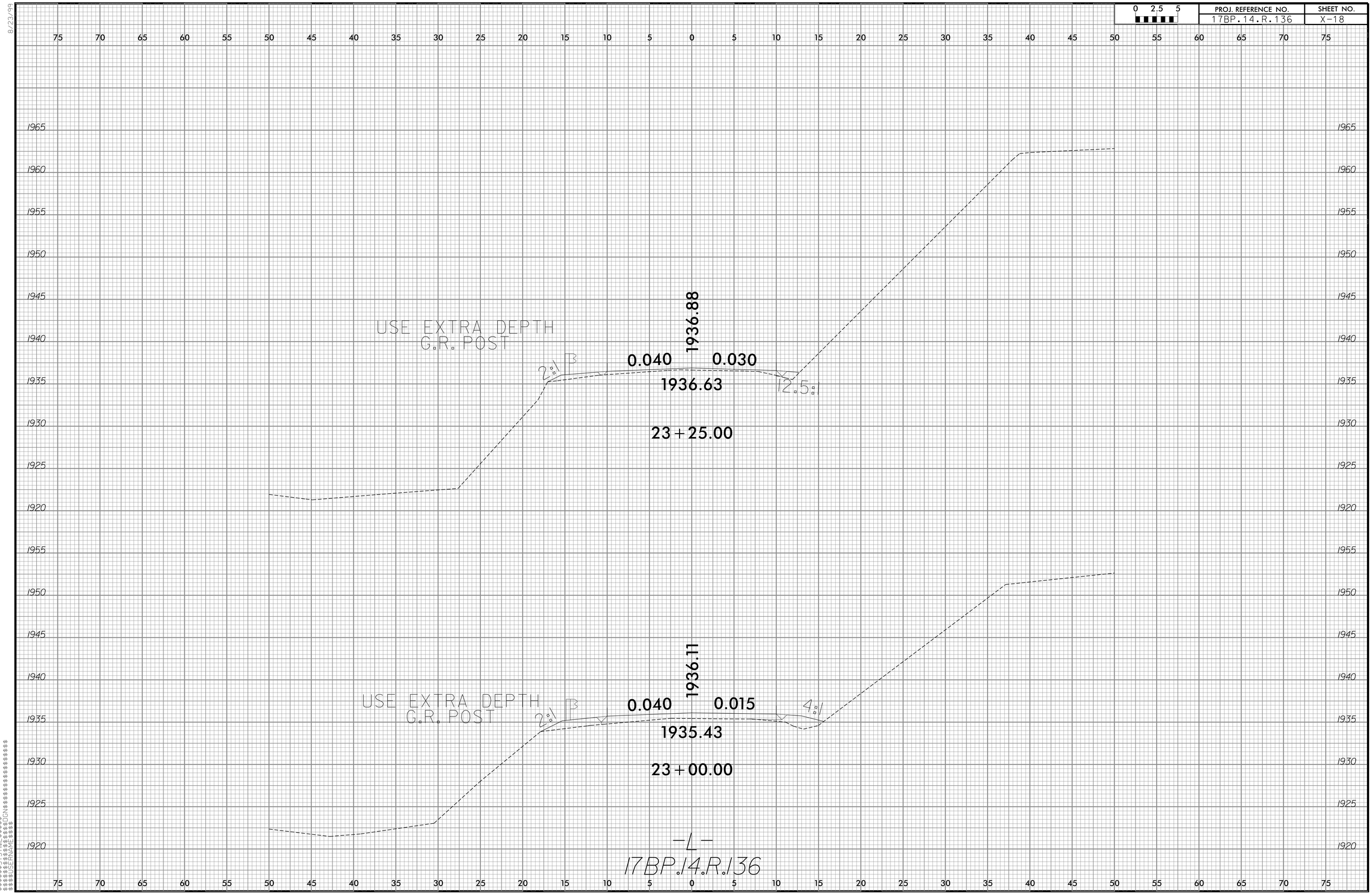

$$$$SYSTIME$$$$
$$$$DGN$$$$
$$$$DATE$$$$
$$$$USERNAME$$$$

0 2.5 5	PROJ. REFERENCE NO.	SHEET NO.
	17BP.14.R.136	X-19

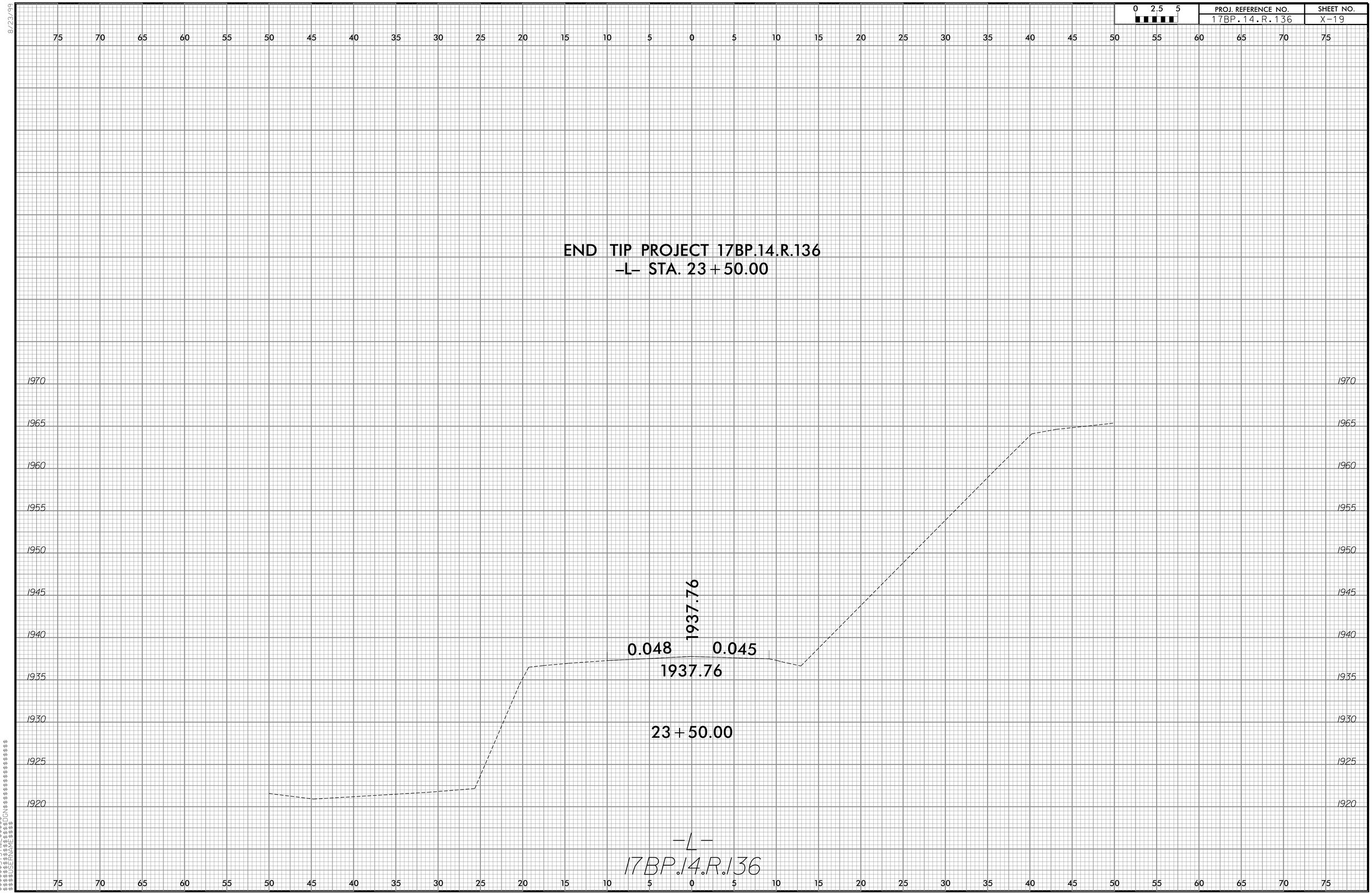

8/23/99
$$$$SYSTIME$$$$
$$$$DGN$$$$
$$$$DGNNAME$$$$

8/23/99

0 2.5 5	PROJ. REFERENCE NO.	SHEET NO.
	17BP.14.R.136	X-20

$$$$SYSTIME$$$$
$$$$DGN$$$$
$$$$DGNFILE$$$$

PROJECT: 17BP.14.R.135; 17BP.14.R.136

CONTRACT: DN00115

STATE OF NORTH CAROLINA
DIVISION OF HIGHWAYS

TRANSYLVANIA COUNTY

LOCATION: BRIDGE NO. 138 OVER TOXAWAY CREEK AND BRIDGE NO. 205 OVER LITTLE CREEK ON SR 1143 (FROZEN CREEK RD)

STATE	STATE PROJECT REFERENCE NO.	SHEET NO.	TOTAL SHEETS
N.C.	17BP.14.R.135; 17BP.14.R.136		

STATE PROJ. NO.	F. A. PROJ. NO.	DESCRIPTION
45360.1.28	BRZ-1143(8)	PE
45360.2.28	BRZ-1143(8)	ROW, UTL
17BP.14.R.135		CONST.
45360.1.29	BRZ-1143(9)	PE
45360.2.29	BRZ-1143(9)	ROW, UTL
17BP.14.R.136		CONST.

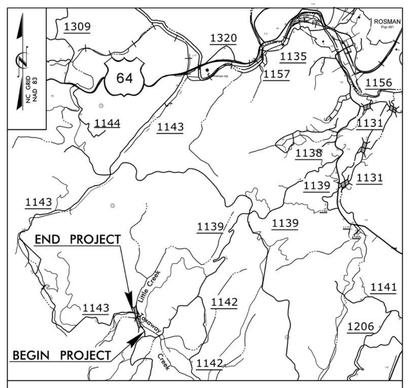

VICINITY MAP

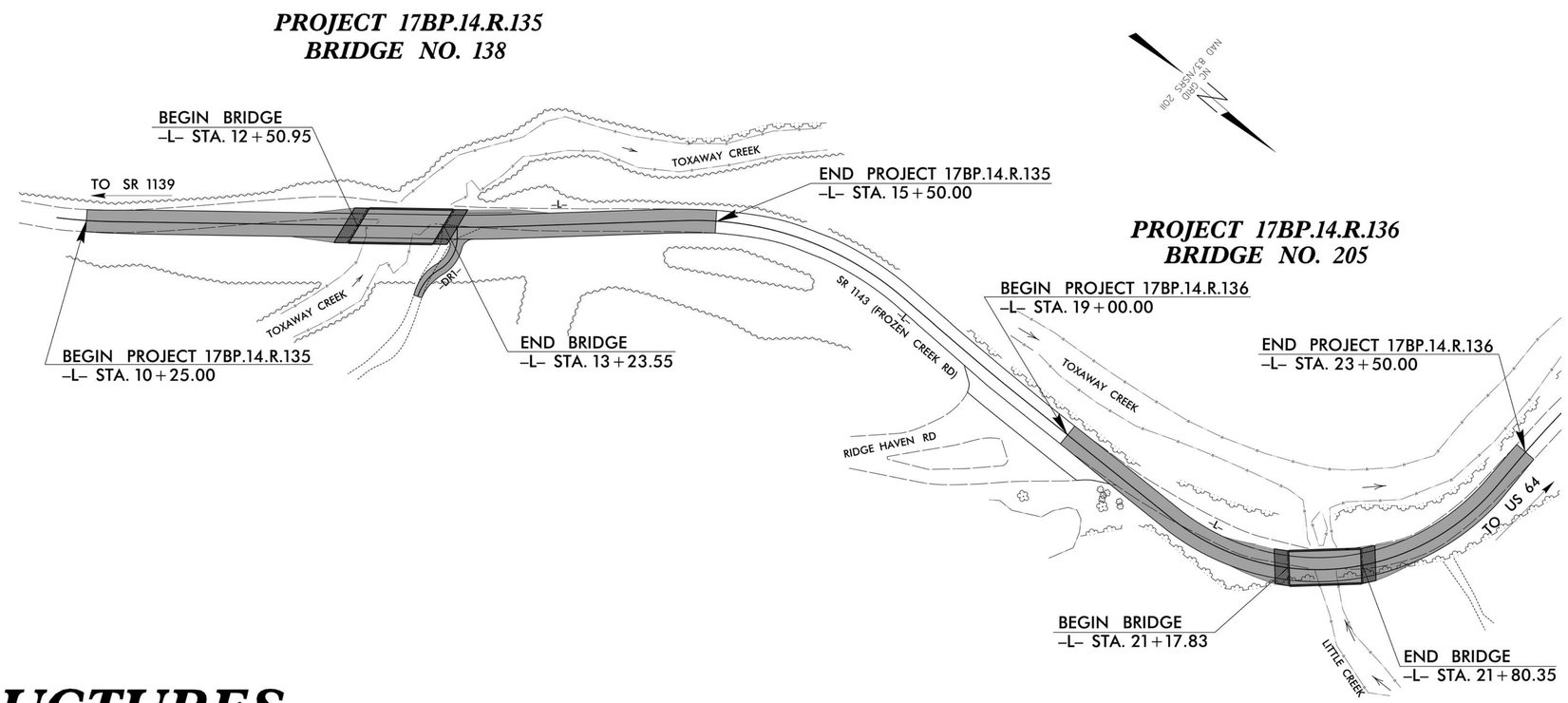

STRUCTURES

DocuSigned by:
Hardy Willis
CC287FCF023461
10/30/2015

V&M
Vaughn & Melton
Consulting Engineers
Asheville, North Carolina 828-253-2796
Charlotte, North Carolina 704-357-0488
Tri-Cities, Tennessee 423-467-8401
Knoxville, Tennessee 865-546-5800
Middlesboro, Kentucky 606-248-6600
Spartanburg, South Carolina 864-574-4775

Copyright © 2006 Vaughn & Melton, Inc. All Rights Reserved

STATE OF NORTH CAROLINA DEPARTMENT OF TRANSPORTATION

DESIGN DATA

ADT 2010 = 440
ADT 2025 = 880
T = 6%
V = 35 MPH

FUNCT. CLASS = RURAL LOCAL
SUB-REGIONAL TIER

PROJECT LENGTH

LENGTH ROADWAY PROJECT 17BP.14.R.135 = 0.086 MI
LENGTH STRUCTURE PROJECT 17BP.14.R.135 = 0.014 MI
TOTAL LENGTH OF PROJECT 17BP.14.R.135 = 0.100 MI

LENGTH ROADWAY PROJECT 17BP.14.R.136 = 0.074 MI
LENGTH STRUCTURE PROJECT 17BP.14.R.136 = 0.012 MI
TOTAL LENGTH OF PROJECT 17BP.14.R.136 = 0.086 MI

Prepared in the Office of:
VAUGHN & MELTON
1318-F PATTON AVE.
ASHEVILLE NC, 28806
FOR THE NORTH CAROLINA DIVISION OF HIGHWAYS

2012 STANDARD SPECIFICATIONS

LETTING DATE :

HARDY WILLIS, PE
PROJECT ENGINEER

REECE SCHULER, PE
PROJECT DESIGN ENGINEER

STRUCTURES MANAGEMENT UNIT
1000 BIRCH RIDGE DR.
RALEIGH, N.C. 27610

DIVISION OF HIGHWAYS
STATE OF NORTH CAROLINA

JOSH DEYTON, PE
DIVISION 14 BRIDGE PROJECT MANAGER

DEPARTMENT OF TRANSPORTATION
FEDERAL HIGHWAY ADMINISTRATION

APPROVED
DIVISION ADMINISTRATOR DATE

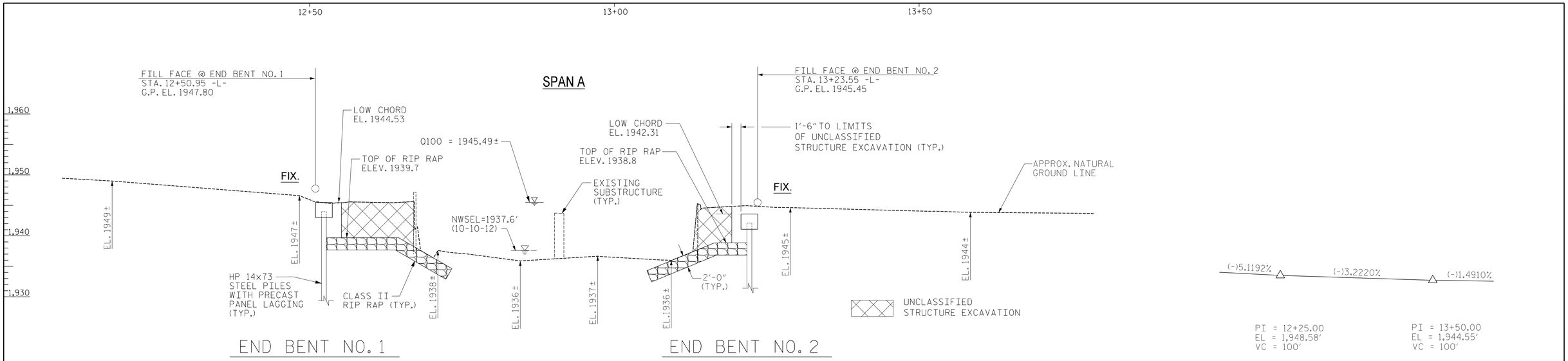

SECTION ALONG ℄ SURVEY -L-

SECTIONS AT END BENTS ARE AT RIGHT ANGLES.

VERTICAL GRADE DATA -L-

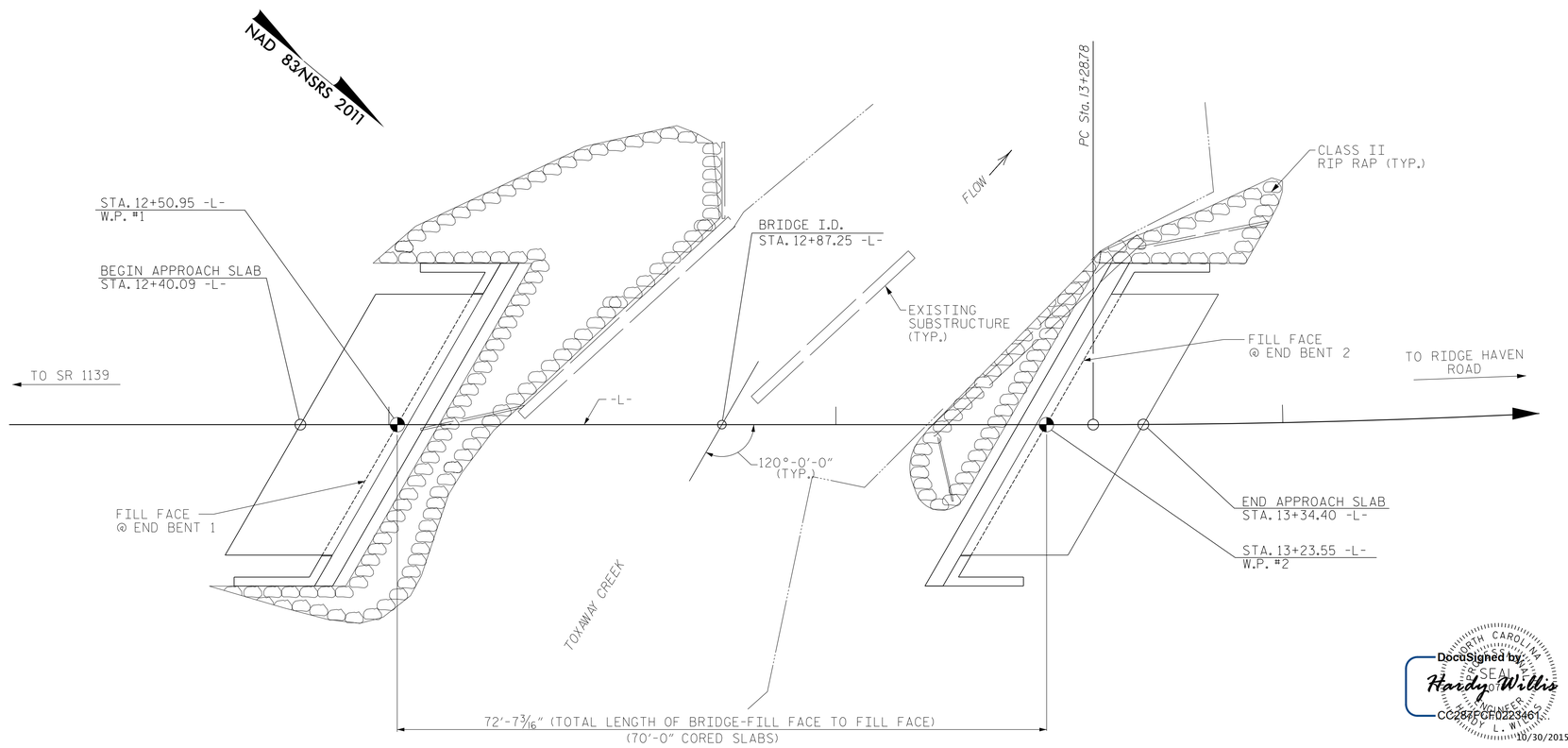

PLAN ALONG ℄ SURVEY -L-

PI STA 13+53.75
△ = 2° 51' 37.6"(LT)
D = 5° 43' 46.5"
L = 49.92'
T = 24.97'
R = 1,000.00'

HORIZONTAL CURVE DATA -L-

NOTES:
END BENTS ARE PARALLEL.
PILES NOT SHOWN IN PLAN VIEW FOR CLARITY.

PROJECT NO. 17BP.14.R.135
TRANSYLVANIA COUNTY
STATION: 12+87.25 -L-

SHEET 1 OF 2 REPLACES BRIDGE #138

DocuSigned by: Hardy Willis
CC287FCF0223461...
10/30/2015

NORTH CAROLINA PROFESSIONAL SEAL ENGINEER HARDY L. WILLIS

V&M
Vaughn & Melton
Consulting Engineers
Asheville, North Carolina 828-253-2796
Charlotte, North Carolina 704-357-0488
Tri-Cities, Tennessee 423-467-8401
Knoxville, Tennessee 865-546-5800
Middlesboro, Kentucky 606-248-6600
Spartanburg, South Carolina 864-574-4775

Copyright © 2006 Vaughn & Melton, Inc. All Rights Reserved

STATE OF NORTH CAROLINA
DEPARTMENT OF TRANSPORTATION
RALEIGH

GENERAL DRAWING

BRIDGE over TOXAWAY CREEK
on SR 1143 between SR 1139
& RIDGE HAVEN ROAD

DWN. BY: MAF	DATE: 8/2014	
CHKD. BY: HLW	DATE: 8/2014	
DES. EGR. OF RECORD: TSA	DATE: 8/2014	

REVISIONS

NO.	BY:	DATE:	NO.	BY:	DATE:
1			3		
2			4		

SHEET NO. S-1
TOTAL SHEETS 46

BM #1 - N 512664.487 E 845597.902, RR SPIKE IN BASE 10" CHERRY 44.05 LT. STA. 11+90.03 -L-, ELEV. 1952.93'

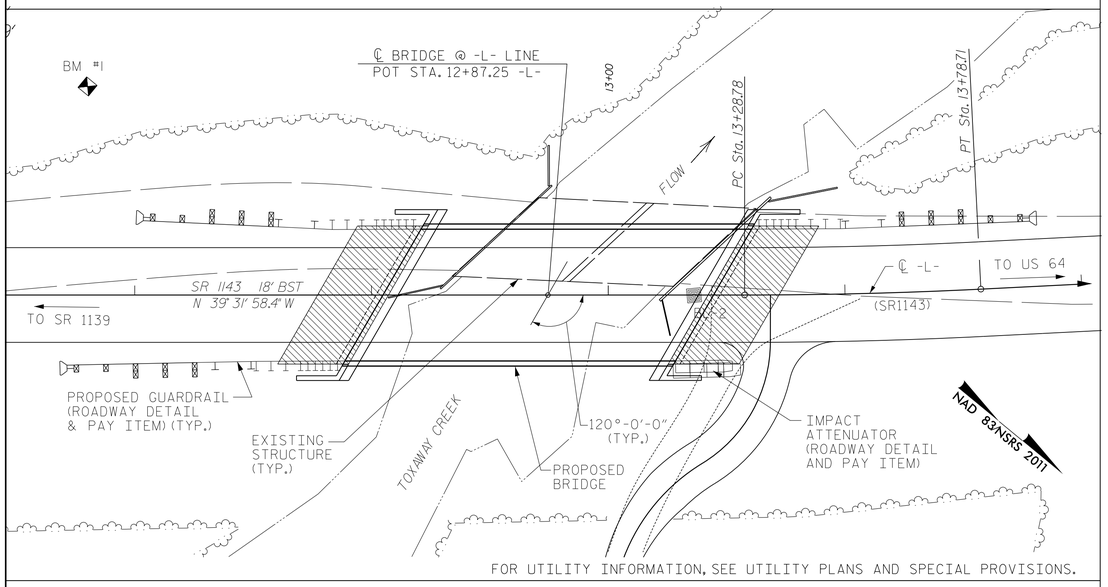

FOR UTILITY INFORMATION, SEE UTILITY PLANS AND SPECIAL PROVISIONS.

LOCATION SKETCH

GENERAL NOTES:

ASSUMED LIVE LOAD = HL-93 OR ALTERNATE LOADING.

THIS BRIDGE HAS BEEN DESIGNED IN ACCORDANCE WITH THE REQUIREMENTS OF THE AASHTO LRFD BRIDGE DESIGN SPECIFICATIONS.

THIS BRIDGE IS LOCATED IN SEISMIC ZONE 1.

FOR OTHER DESIGN DATA AND GENERAL NOTES, SEE SHEET SN.

FOR EROSION CONTROL MEASURES, SEE EROSION CONTROL PLANS.

THE EXISTING STRUCTURE, CONSISTING OF A TWO SPAN, 47 FOOT LONG, TIMBER DECK ON STEEL I-BEAMS, AND A CLEAR ROADWAY WIDTH 17'-1", ON TIMBER CAPS/TIMBER POST AND SILL END BENTS, AND TIMBER CRUTCH BENT, AND LOCATED AT THE PROPOSED STRUCTURE, SHALL BE REMOVED IN STAGES. THE EXISTING BRIDGE IS PRESENTLY NOT POSTED BELOW THE LEGAL LOAD LIMIT.

REMOVAL OF THE EXISTING BRIDGE SHALL BE PERFORMED IN A MANNER THAT PREVENTS DEBRIS FROM FALLING INTO THE WATER. THE CONTRACTOR SHALL SUBMIT DEMOLITION PLANS FOR REVIEW AND REMOVE THE BRIDGE IN ACCORDANCE WITH ARTICLE 402-2 OF THE STANDARD SPECIFICATIONS.

THE SUBSTRUCTURE OF THE EXISTING BRIDGE INDICATED ON THE PLANS IS FROM THE BEST INFORMATION AVAILABLE. SINCE THIS INFORMATION IS SHOWN FOR THE CONVENIENCE OF THE CONTRACTOR, THE CONTRACTOR SHALL HAVE NO CLAIM WHATSOEVER AGAINST THE DEPARTMENT OF TRANSPORTATION FOR ANY DELAYS OR ADDITIONAL COST INCURRED BASED ON DIFFERENCES BETWEEN THE EXISTING BRIDGE SUBSTRUCTURE SHOWN ON THE PLANS AND THE ACTUAL CONDITIONS AT THE PROJECT SITE.

THIS STRUCTURE HAS BEEN DESIGNED IN ACCORDANCE WITH "HEC 18-EVALUATING SCOUR AT BRIDGES".

FOR SUBMITTAL OF WORKING DRAWINGS, SEE SPECIAL PROVISIONS.

FOR FALSEWORK AND FORMWORK, SEE SPECIAL PROVISIONS.

FOR CRANE SAFETY, SEE SPECIAL PROVISIONS.

FOR GROUT FOR STRUCTURES, SEE SPECIAL PROVISIONS.

INASMUCH AS THE PAINT SYSTEM ON THE EXISTING STRUCTURAL STEEL CONTAINS LEAD, THE CONTRACTOR'S ATTENTION IS DIRECTED TO ARTICLE 107-1 OF THE STANDARD SPECIFICATIONS. ANY COSTS RESULTING FROM COMPLIANCE WITH APPLICABLE STATE OR FEDERAL REGULATIONS PERTAINING TO HANDLING OF MATERIALS CONTAINING LEAD BASED PAINT SHALL BE INCLUDED IN THE BID PRICE FOR "REMOVAL OF EXISTING STRUCTURE AT STATION 12+87.25."

THE MATERIAL SHOWN IN THE CROSS-HATCHED AREA SHALL BE EXCAVATED FOR A DISTANCE OF 25 FT. EACH SIDE OF CENTERLINE ROADWAY AS DIRECTED BY THE ENGINEER. THIS WORK WILL BE PAID FOR AT THE CONTRACT LUMP SUM PRICE FOR UNCLASSIFIED STRUCTURE EXCAVATION. SEE SECTION 412 OF THE STANDARD SPECIFICATIONS.

ASPHALT WEARING SURFACE IS INCLUDED IN ROADWAY QUANTITY ON ROADWAY PLANS.

FOUNDATION NOTES:

FOR PILES, SEE SECTION 450 OF THE STANDARD SPECIFICATIONS.

PILES AT END BENT NO. 1 AND END BENT NO. 2 ARE DESIGNED FOR A FACTORED RESISTANCE OF 95 TONS PER PILE.

DRIVE PILES AT END BENT NO. 1 AND END BENT NO. 2 TO A REQUIRED DRIVING RESISTANCE OF 160 TONS PER PILE.

IT HAS BEEN ESTIMATED THAT A HAMMER WITH AN EQUIVALENT RATED ENERGY IN THE RANGE OF 20 TO 30 FT-KIPS PER BLOW WILL BE REQUIRED TO DRIVE PILES AT END BENT NO. 1 AND END BENT NO. 2. THE ESTIMATED ENERGY RANGE DOES NOT RELEASE THE CONTRACTOR FROM PROVIDING DRIVING EQUIPMENT IN ACCORDANCE WITH SUBARTICLE 450-3(D)(2) OF THE STANDARD SPECIFICATIONS.

PILE EXCAVATION IS REQUIRED TO INSTALL PILES AT END BENT NO. 1. EXCAVATE HOLES AT PILE LOCATIONS TO ELEVATION 1927.0 FT. FOR PILE EXCAVATION, SEE SECTION 450 OF THE STANDARD SPECIFICATIONS.

INSTALL PILES AT END BENT NO. 1 TO A TIP ELEVATION NO HIGHER THAN 1927.0 FT. AND WITH PENETRATION OF AT LEAST 5 FEET INTO ROCK AS DEFINED BY ARTICLE 411-1 OF THE STANDARD SPECIFICATIONS.

PILE EXCAVATION IS REQUIRED TO INSTALL PILES AT END BENT NO. 2. EXCAVATE HOLES AT PILE LOCATIONS TO ELEVATION 1927.0 FT. FOR PILE EXCAVATION, SEE SECTION 450 OF THE STANDARD SPECIFICATIONS.

INSTALL PILES AT END BENT NO. 2 TO A TIP ELEVATION NO HIGHER THAN 1927.0 FT. AND WITH PENETRATION OF AT LEAST 5 FEET INTO ROCK AS DEFINED BY ARTICLE 411-1 OF THE STANDARD SPECIFICATIONS.

CONCRETE IS REQUIRED TO FILL HOLES FOR PILE ELEVATION AT END BENT NO. 1 AND END BENT NO. 2.

THE SCOUR CRITICAL ELEVATION FOR END BENT NO. 1 AND END BENT NO. 2 IS 1933 FT. SCOUR CRITICAL ELEVATIONS ARE USED TO MONITOR POSSIBLE SCOUR PROBLEMS DURING THE LIFE OF THE STRUCTURE.

PRECAST PANEL LAGGING AND CLASS II RIP RAP WILL BE USED FOR SCOUR PROTECTION AT THE END BENT LOCATIONS AS SHOWN ON THE STRUCTURE PLANS.

PRIOR TO THE INSTALLATION OF THE PRECAST PANEL LAGGING AT END BENT NO. 1 AND END BENT NO. 2 (LT), KEY THE LEVELING PAD A MINIMUM OF 6 INCHES INTO NON-SCOURABLE ROCK. THE PRECAST PANELS SHOULD BE PLACED IN A LAYER OF DRY PACKED GROUT IN THE KEYWAY OF THE LEVELING PAD. REFER TO THE LEVELING PAD DETAIL INCLUDED WITH THE PLANS FOR ADDITIONAL INFORMATION.

HYDRAULIC DATA

DESIGN DISCHARGE	= 950	CFS
DESIGN FREQUENCY	= 25	YRS
DESIGN HW ELEVATION	= 1944.8	FT
BASE DISCHARGE	= 1300	CFS
BASE FREQUENCY	= 100	YRS
BASE HW ELEVATION	= 1945.49	FT

OVERTOPPING FLOOD DATA

OVERTOPPING DISCHARGE	= 8500	CFS
OVERTOPPING FREQUENCY	= 500++	YRS
OVERTOPPING ELEVATION	= 1955.7	FT
DRAINAGE AREA	= 3.28	SQ. MI.

TOTAL BILL OF MATERIAL

	REMOVAL OF EXISTING STRUCTURE	PILE EXCAVATION IN SOIL	PILE EXCAVATION NOT IN SOIL	UNCLASSIFIED STRUCTURE EXCAVATION	CLASS A CONCRETE	BRIDGE APPROACH SLABS	REINFORCING STEEL	HP 14 X 73 GALVANIZED STEEL PILES		VERTICAL CONCRETE BARRIER RAIL	RIP RAP CLASS II (2'-0" THICK)	GEOTEXTILE FOR DRAINAGE	ELASTOMERIC BEARINGS	3'-0" x 2'-0" PRESTRESSED CONCRETE CORED SLABS		SOLDIER PILE RETAINING WALL
	LUMP SUM	LIN. FT.	LIN. FT.	LUMP SUM	CU. YARDS	LUMP SUM	LBS.	NO.	LIN. FT.	LIN. FT.	TONS	SQ. YARDS	LUMP SUM	NO.	LIN. FT.	SQ. FEET
SUPERSTRUCTURE						LUMP SUM				140.29			LUMP SUM	10	700.0	
END BENT 1		75	90	LUMP SUM	22.8		3,204	10	200		92	104				345.6
END BENT 2		30	110	LUMP SUM	22.8		3,200	10	150		39	44				105.8
TOTAL	LUMP SUM	105	200	LUMP SUM	45.6	LUMP SUM	6,404	20	350	140.29	131	148	LUMP SUM	10	700.0	451.4

DocuSigned by: Hardy Willis
CC287CFD22346...
10/30/2015

NORTH CAROLINA PROFESSIONAL SEAL ENGINEER HARDY L. WILLIS

PROJECT NO. 17BP.14.R.135

TRANSYLVANIA COUNTY

STATION: 12+87.25 -L-

SHEET 2 OF 2

V&M Vaughn & Melton Consulting Engineers
Asheville, North Carolina 828-253-2796
Charlotte, North Carolina 704-357-0488
Tri-Cities, Tennessee 423-467-8401
Knoxville, Tennessee 865-546-5800
Middlesboro, Kentucky 606-248-6600
Spartanburg, South Carolina 864-574-4775

Copyright © 2006 Vaughn & Melton, Inc. All Rights Reserved

STATE OF NORTH CAROLINA
DEPARTMENT OF TRANSPORTATION
RALEIGH

GENERAL DRAWING

BRIDGE over TOXAWAY CREEK on SR 1143 between SR 1139 & RIDGE HAVEN ROAD

DWN. BY: MAF	DATE: 8/2014	
CHKD. BY: HLW	DATE: 8/2014	
DES. EGR. OF RECORD: TSA	DATE: 8/2014	

REVISIONS						
NO.	BY:	DATE:	NO.	BY:	DATE:	
1			3			
2			4			

SHEET NO. S-2

TOTAL SHEETS 46

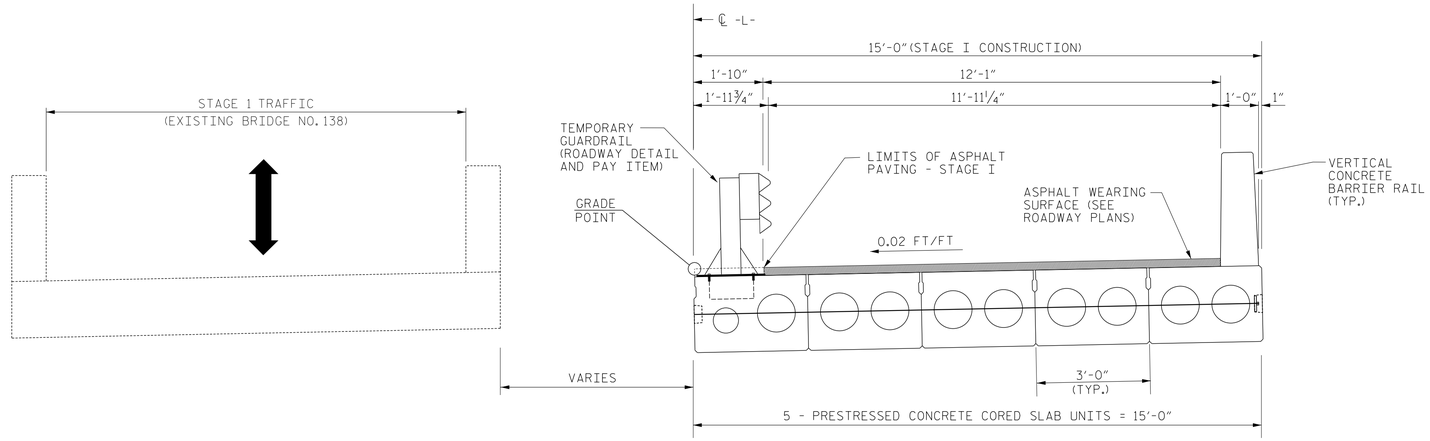

STAGE 1

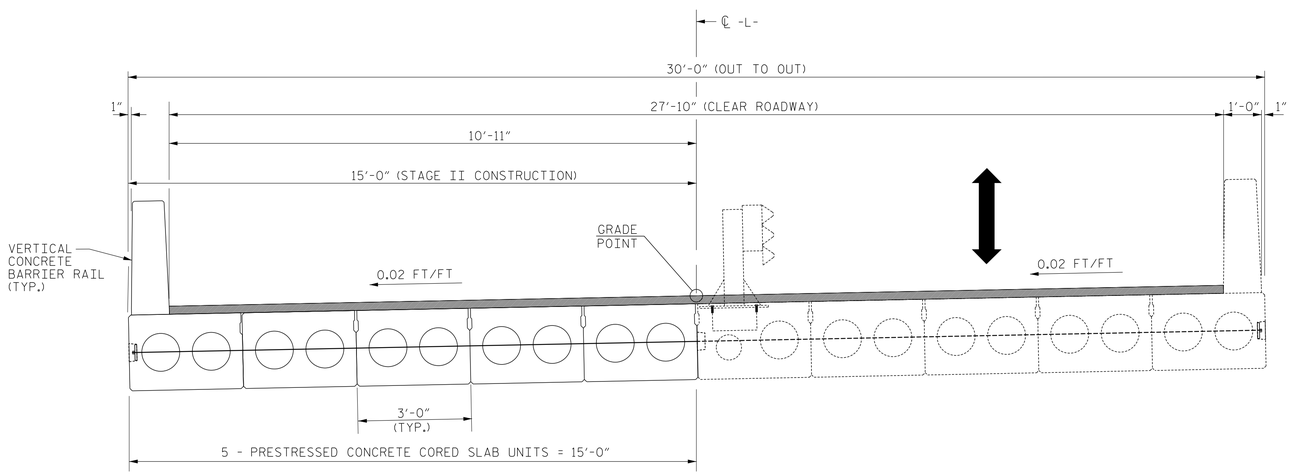

STAGE II

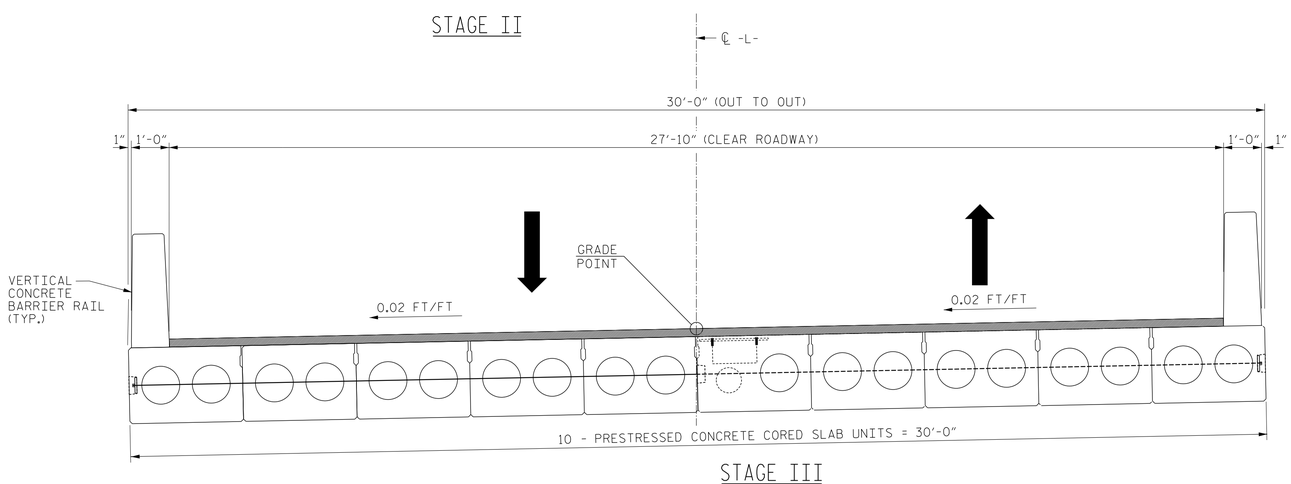

STAGE III

NOTES

FOR TEMPORARY GUARDRAIL DETAILS, SEE "ANCHORAGE DETAILS FOR TEMPORARY GUARDRAIL ANCHOR ASSEMBLY FOR TYPE IV CORED SLAB UNIT" SHEET.

FOR PHASING OF TRAFFIC AND OTHER DETAILS, SEE TRAFFIC MANAGEMENT PLANS.

NORTH CAROLINA PROFESSIONAL SEAL ENGINEER
DocuSigned by: Hardy Willis
CC287ECF022361...
10/30/2015

PROJECT NO. 17BP.14.R.135
TRANSYLVANIA COUNTY
STATION: 12+87.25 -L-

V&M
Vaughn & Melton
Consulting Engineers
Asheville, North Carolina 828-253-2796
Charlotte, North Carolina 704-357-0488
Tri-Cities, Tennessee 423-467-8401
Knoxville, Tennessee 865-546-5800
Middlesboro, Kentucky 606-248-6600
Spartanburg, South Carolina 864-574-4775

Copyright © 2006 Vaughn & Melton, Inc. All Rights Reserved

STATE OF NORTH CAROLINA
DEPARTMENT OF TRANSPORTATION
RALEIGH

CONSTRUCTION STAGING

DWN. BY: MAF	DATE: 8/2014	
CHKD. BY: HLW	DATE: 8/2014	
DES. ENG. OF RECORD: TSA	DATE: 8/2014	

REVISIONS						
NO.	BY:	DATE:	NO.	BY:	DATE:	
1			3			
2			4			

SHEET NO. S-3
TOTAL SHEETS 46

LOAD AND RESISTANCE FACTOR RATING (LRFD) SUMMARY FOR PRESTRESSED CONCRETE GIRDERS

LEVEL		VEHICLE	WEIGHT (W) (TONS)	CONTROLLING LOAD RATING	MINIMUM RATING FACTORS (RF)	TONS = W X RF	STRENGTH I LIMIT STATE											SERVICE III LIMIT STATE						COMMENT NUMBER
								MOMENT					SHEAR						MOMENT					
							LIVELOAD FACTORS	DISTRIBUTION FACTORS (DF)	RATING FACTOR	SPAN	GIRDER LOCATION	DISTANCE FROM LEFT END OF SPAN (ft)	DISTRIBUTION FACTORS (DF)	RATING FACTOR	SPAN	GIRDER LOCATION	DISTANCE FROM LEFT END OF SPAN (ft)	LIVELOAD FACTORS	DISTRIBUTION FACTORS (DF)	RATING FACTOR	SPAN	GIRDER LOCATION	DISTANCE FROM LEFT END OF SPAN (ft)	
DESIGN LOAD RATING		HL-93(Inv)	N/A	1	1.06	--	1.75	0.248	1.14	70'	EL	34.423	0.655	1.06	70'	EL	6.885	0.80	0.248	1.11	70'	EL	34.423	
		HL-93(Opr)	N/A	--	1.374	--	1.35	0.248	1.48	70'	EL	34.423	0.655	1.37	70'	EL	6.885	N/A	--	--	--	--	--	
		HS-20(Inv)	36.000	2	1.32	47.508	1.75	0.248	1.48	70'	EL	34.423	0.655	1.32	70'	EL	6.885	0.80	0.248	1.44	70'	EL	34.423	
		HS-20(Opr)	36.000	--	1.711	61.585	1.35	0.248	1.91	70'	EL	34.423	0.655	1.71	70'	EL	6.885	N/A	--	--	--	--	--	
LEGAL LOAD RATING	SV	SNSH	13.500	--	3.204	43.258	1.4	0.248	4.12	70'	EL	34.423	0.655	3.9	70'	EL	6.885	0.80	0.248	3.20	70'	EL	34.423	
		SNGARBS2	20.000	--	2.403	48.063	1.4	0.248	3.09	70'	EL	34.423	0.655	2.78	70'	EL	6.885	0.80	0.248	2.40	70'	EL	34.423	
		SNAGRIS2	22.000	--	2.282	50.21	1.4	0.248	2.94	70'	EL	34.423	0.655	2.58	70'	EL	6.885	0.80	0.248	2.28	70'	EL	34.423	
		SNCOTTS3	27.250	--	1.595	43.463	1.4	0.248	2.05	70'	EL	34.423	0.655	1.95	70'	EL	6.885	0.80	0.248	1.59	70'	EL	34.423	
		SNAGGRS4	34.925	--	1.339	46.755	1.4	0.248	1.72	70'	EL	34.423	0.655	1.62	70'	EL	6.885	0.80	0.248	1.34	70'	EL	34.423	
		SNS5A	35.550	--	1.309	46.526	1.4	0.248	1.68	70'	EL	34.423	0.655	1.65	70'	EL	6.885	0.80	0.248	1.31	70'	EL	34.423	
		SNS6A	39.950	--	1.203	48.069	1.4	0.248	1.55	70'	EL	34.423	0.655	1.5	70'	EL	6.885	0.80	0.248	1.20	70'	EL	34.423	
		SNS7B	42.000	--	1.146	48.129	1.4	0.248	1.47	70'	EL	34.423	0.655	1.48	70'	EL	6.885	0.80	0.248	1.15	70'	EL	34.423	
	TTST	TNAGRIT3	33.000	--	1.468	48.444	1.4	0.248	1.89	70'	EL	34.423	0.655	1.79	70'	EL	6.885	0.80	0.248	1.47	70'	EL	34.423	
		TNT4A	33.075	--	1.475	48.79	1.4	0.248	1.9	70'	EL	34.423	0.655	1.74	70'	EL	6.885	0.80	0.248	1.48	70'	EL	34.423	
		TNT6A	41.600	--	1.208	50.272	1.4	0.248	1.55	70'	EL	34.423	0.655	1.58	70'	EL	6.885	0.80	0.248	1.21	70'	EL	34.423	
		TNT7A	42.000	--	1.216	51.061	1.4	0.248	1.56	70'	EL	34.423	0.655	1.55	70'	EL	6.885	0.80	0.248	1.22	70'	EL	34.423	
		TNT7B	42.000	--	1.261	52.955	1.4	0.248	1.62	70'	EL	34.423	0.655	1.44	70'	EL	6.885	0.80	0.248	1.26	70'	EL	34.423	
		TNAGRIT4	43.000	--	1.197	51.476	1.4	0.248	1.54	70'	EL	34.423	0.655	1.4	70'	EL	6.885	0.80	0.248	1.20	70'	EL	34.423	
		TNAGT5A	45.000	--	1.128	50.745	1.4	0.248	1.45	70'	EL	34.423	0.655	1.39	70'	EL	6.885	0.80	0.248	1.13	70'	EL	34.423	
		TNAGT5B	45.000	3	1.113	50.088	1.4	0.248	1.43	70'	EL	34.423	0.655	1.33	70'	EL	6.885	0.80	0.248	1.11	70'	EL	34.423	

LOAD FACTORS:

DESIGN LOAD RATING FACTORS	LIMIT STATE	γ_{DC}	γ_{DW}
	STRENGTH I	1.25	1.50
	SERVICE III	1.00	1.00

NOTES:

MINIMUM RATING FACTORS ARE BASED ON THE STRENGTH I AND SERVICE III LIMIT STATES.

ALLOWABLE STRESSES FOR SERVICE III LIMIT STATE ARE AS REQUIRED FOR DESIGN.

CONTROLLING LOAD RATING

1 DESIGN LOAD RATING (HL-93)

2 DESIGN LOAD RATING (HS-20)

3 LEGAL LOAD RATING **

** SEE CHART FOR VEHICLE TYPE

GIRDER LOCATION

I - INTERIOR GIRDER
EL - EXTERIOR LEFT GIRDER
ER - EXTERIOR RIGHT GIRDER

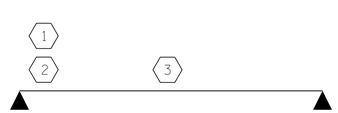

LRFR SUMMARY

DocuSigned by: Hardy Willis CC2875CF022483... 10/30/2015

NORTH CAROLINA PROFESSIONAL SEAL ENGINEER

PROJECT NO. 17BP.14.R.135
TRANSYLVANIA COUNTY
STATION: 12+87.25 -L-

STATE OF NORTH CAROLINA
DEPARTMENT OF TRANSPORTATION
RALEIGH

STANDARD
LRFR SUMMARY FOR
70' CORED SLAB UNIT
60° SKEW & 120° SKEW
(NON-INTERSTATE TRAFFIC)

REVISIONS						SHEET NO.
NO.	BY:	DATE:	NO.	BY:	DATE:	S-4
1			3			TOTAL SHEETS
2			4			46

ASSEMBLED BY : MAF DATE : 8/2014
CHECKED BY : TSA DATE : 8/2014
DRAWN BY : CVC 6/10
CHECKED BY : DNS 6/10

STD. NO. 24LRFR1_60&120S_70L

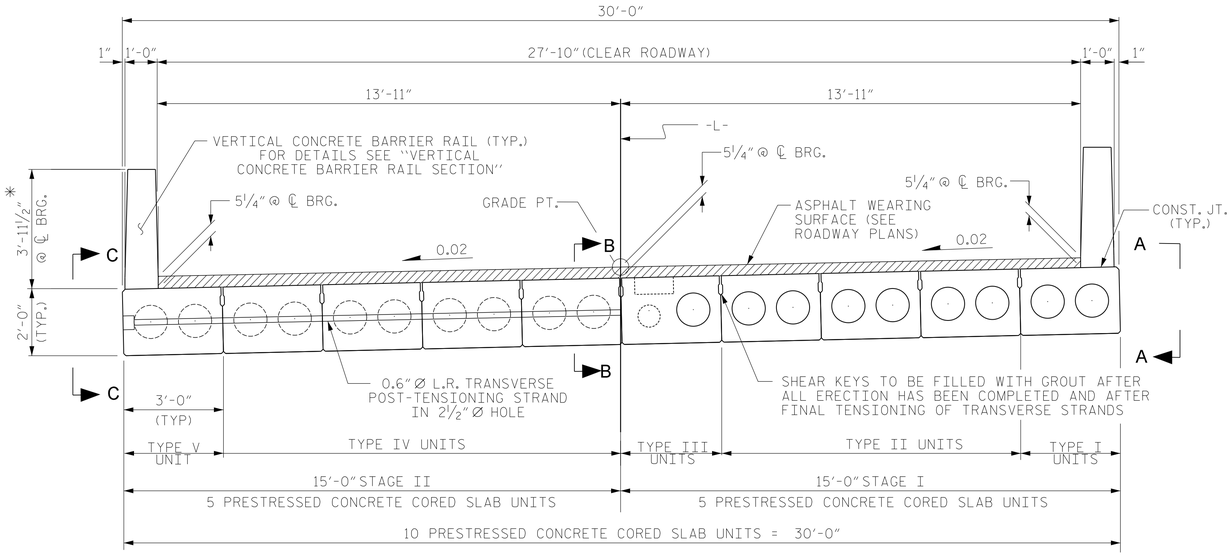

HALF SECTION
AT INTERMEDIATE DIAPHRAGMS

TYPICAL SECTION

HALF SECTION
THROUGH VOIDS

* - THE MAXIMUM BARRIER RAIL HEIGHT AND ASPHALT THICKNESS IS SHOWN. THE HEIGHT OF THE BARRIER RAIL AND ASPHALT THICKNESS VARIES WHILE THE TOP OF THE BARRIER RAIL FOLLOWS THE PROFILE OF THE GUTTERLINE. FOR RAIL HEIGHT DETAILS AND ASPHALT THICKNESS, SEE THE "VERTICAL CONCRETE BARRIER RAIL SECTION" DETAIL.

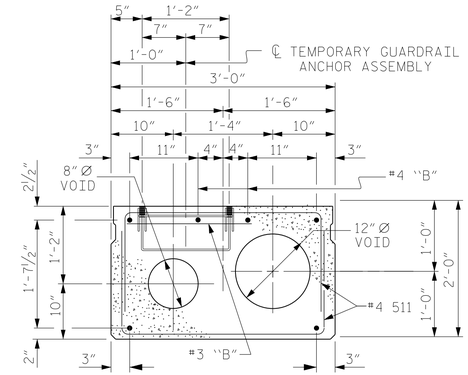

INTERIOR SLAB SECTION

TYPE III

(FOR PRESTRESSED STRAND LAYOUT, SEE "INTERIOR SLAB SECTION TYPE IV)

FOR TEMPORARY GUARDRAIL ANCHOR ASSEMBLY LOCATION, SEE SECTION OF ANCHOR ASSEMBLY LOCATION ON "ANCHORAGE DETAILS FOR TEMPORARY GUARDRAIL ANCHOR ASSEMBLY FOR TYPE IV CORED SLAB UNIT" SHEET.

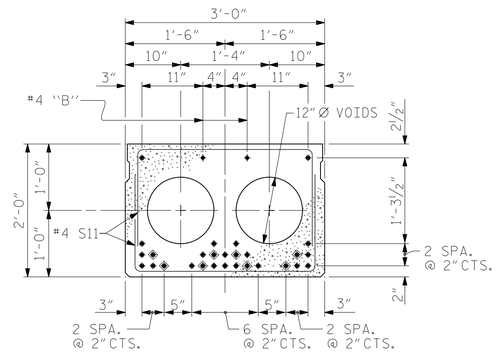

INTERIOR SLAB SECTION (70' UNIT)

TYPE II & TYPE IV (28 STRANDS REQUIRED)

0.6" Ø LOW RELAXATION STRAND LAYOUT

◈ BOND SHALL BE BROKEN ON THESE STRANDS FOR A DISTANCE OF 12'-0" FROM END OF CORED SLAB UNIT. SEE STANDARD SPECIFICATIONS, ARTICLE 1078-7.

DEBONDING LEGEND

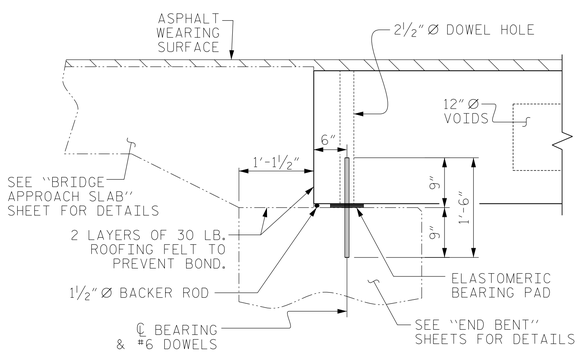

SECTION AT END BENT

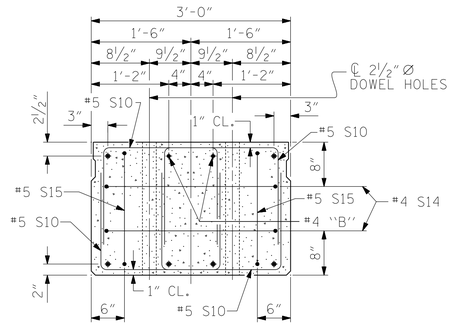

END ELEVATION

SHOWING PLACEMENT OF DOUBLE STIRRUPS AND LOCATION OF DOWEL HOLES. (STRAND LAYOUT NOT SHOWN.) INTERIOR SLAB UNIT SHOWN-EXTERIOR SLAB UNIT SIMILAR EXCEPT SHEAR KEY LOCATION.

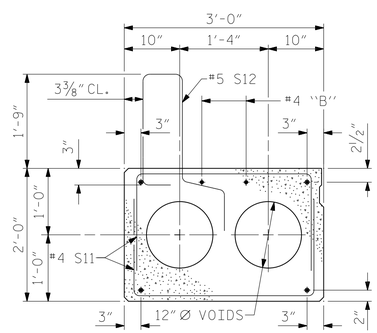

EXTERIOR SLAB SECTION

TYPE I & V

(FOR PRESTRESSED STRAND LAYOUT, SEE INTERIOR SLAB SECTION TYPE IV)

DocuSigned by: Hardy Willis CC287FCF022346... 10/30/2015

PROJECT NO. 17BP.14.R.135
TRANSYLVANIA COUNTY
STATION: 12+87.25 -L-

SHEET 1 OF 5

STATE OF NORTH CAROLINA
DEPARTMENT OF TRANSPORTATION
RALEIGH

STANDARD

3'-0" X 2'-0" PRESTRESSED CONCRETE CORED SLAB UNIT

ASSEMBLED BY : MAF	DATE : 8/2014		
CHECKED BY : TSA	DATE : 8/2014		
DRAWN BY : MAA 6/10	REV. 12/11 MAA/AAC		
CHECKED BY : MKT 7/10			

REVISIONS						SHEET NO.
NO.	BY:	DATE:	NO.	BY:	DATE:	S-5
1			3			TOTAL SHEETS
2			4			46

STD. NO. 24PCS4_30_120S

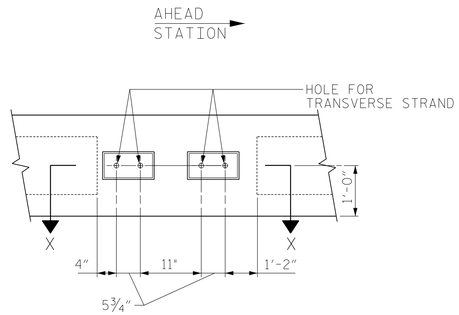

VIEW A-A
PREVIOUS SHEET

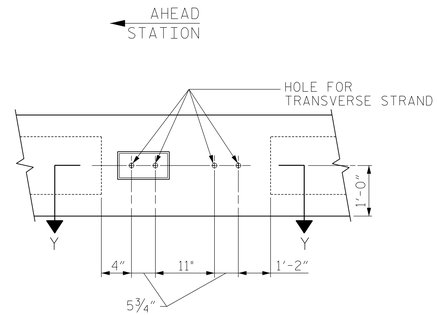

VIEW B-B
PREVIOUS SHEET

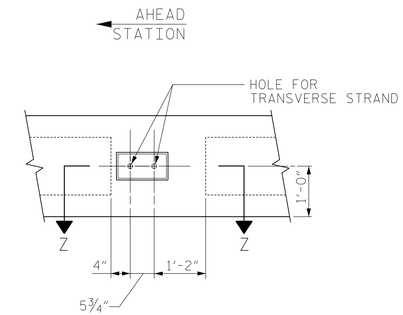

VIEW C-C
PREVIOUS SHEET

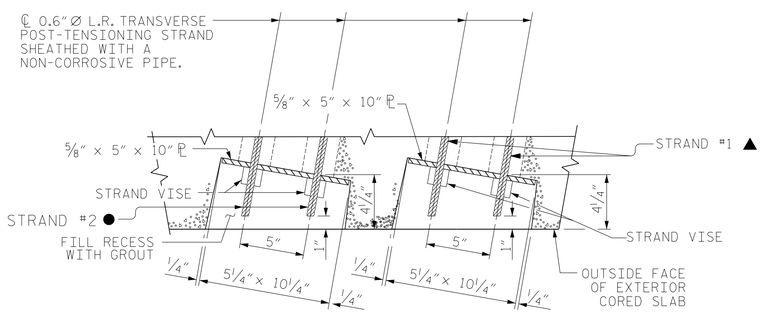

SECTION X-X
(TYPE I UNIT)

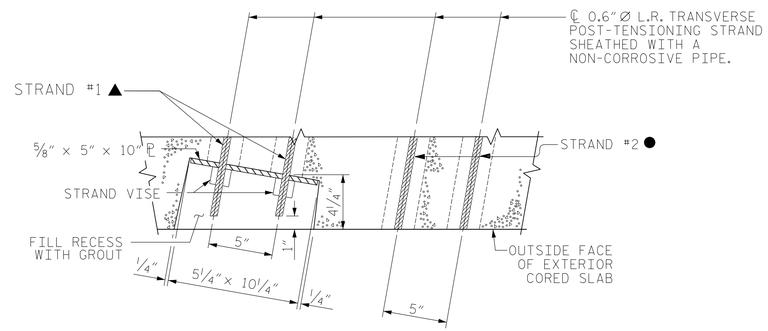

SECTION Y-Y
(TYPE III UNIT)

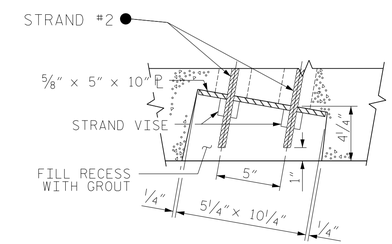

SECTION Z-Z
(TYPE V UNIT)

▲ STRANDS #1 GO THROUGH 5 CORED SLAB UNITS (TO BE TENSIONED DURING STAGE I CONSTRUCTION).

● STRANDS #2 GO THROUGH ALL 10 CORED SLAB UNITS (TO BE TENSIONED DURING STAGE II CONSTRUCTION).

GROUTED RECESS AT END OF POST-TENSIONED STRAND

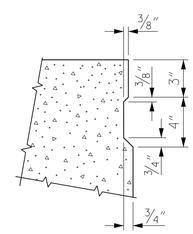

SHEAR KEY DETAIL

NOTE: OMIT SHEAR KEY ON OUTSIDE FACE OF EXTERIOR CORED SLABS.

PROJECT NO. 17BP.14.R.135

TRANSYLVANIA COUNTY

STATION: 12+87.25 -L-

SHEET 2 OF 5

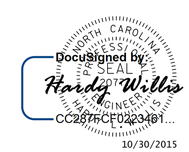

STATE OF NORTH CAROLINA
DEPARTMENT OF TRANSPORTATION
RALEIGH

3'-0" X 2'-0"
PRESTRESSED CONCRETE
CORED SLAB UNIT

DRAWN BY :	MAF	DATE :	8/2014
CHECKED BY :	HLW	DATE :	8/2014

REVISIONS						SHEET NO.
NO.	BY:	DATE:	NO.	BY:	DATE:	S-6
1			3			TOTAL SHEETS
2			4			46

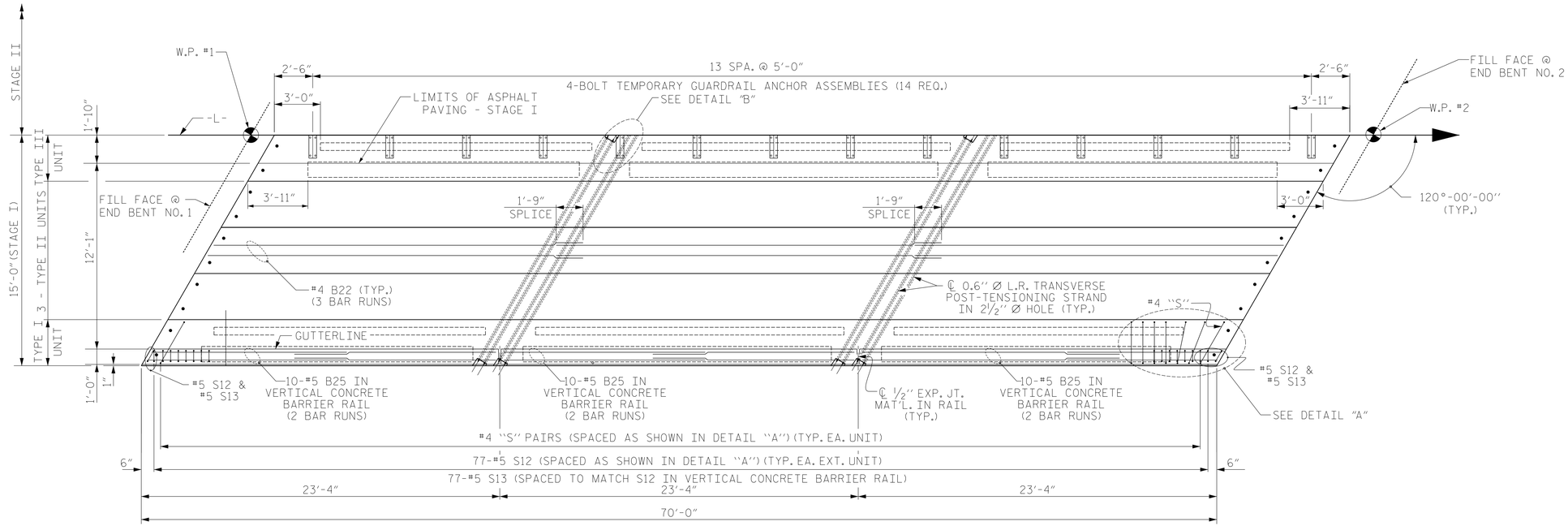

PLAN OF UNIT - STAGE I

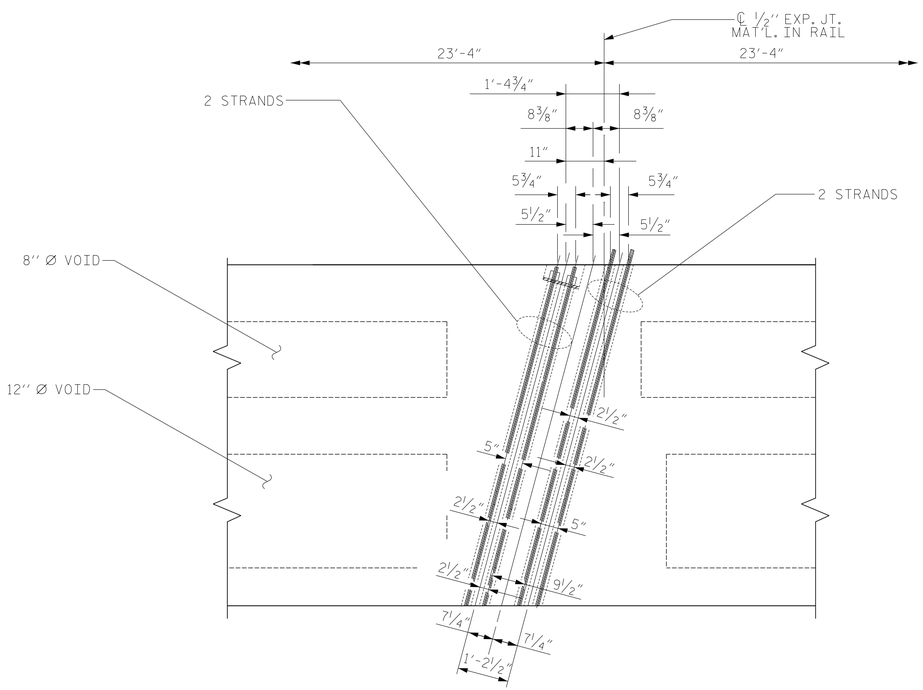

DETAIL "B"

#4 S11 BARS MAY BE SHIFTED AS NECESSARY TO MAINTAIN 1" CLEAR TO GROUTED RECESS AND 2½" Ø TRANSVERSE POST-TENSIONING STRAND HOLES

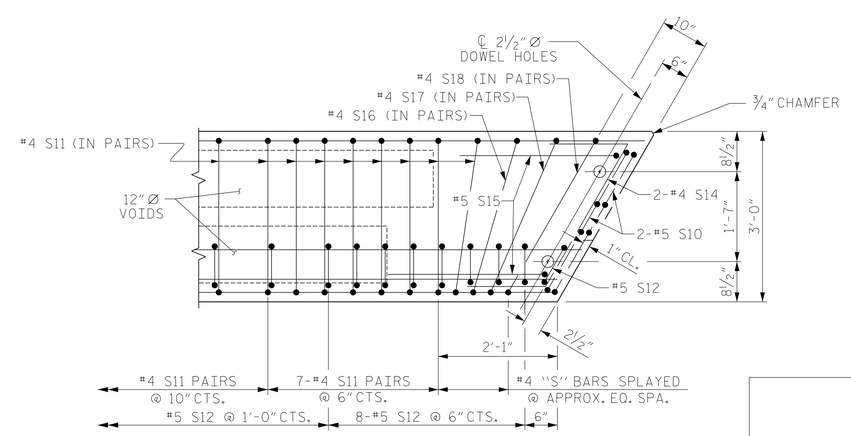

DETAIL "A"

NOTE: EXTERIOR UNIT SHOWN - INTERIOR UNIT SIMILAR EXCEPT OMIT #5 S12 BARS.

NORTH CAROLINA PROFESSIONAL SEAL ENGINEER L. HARDY WILLIS

DocuSigned by: Hardy Willis CC287FCF023461... 10/30/2015

PROJECT NO. 17BP.14.R.135

TRANSYLVANIA COUNTY

STATION: 12+87.35 -L-

SHEET 3 OF 5

STATE OF NORTH CAROLINA
DEPARTMENT OF TRANSPORTATION
RALEIGH

PLAN OF 70' UNIT 27'-10" CLEAR ROADWAY 120° SKEW STAGE I

ASSEMBLED BY :	MAF	DATE :	8/2014
CHECKED BY :	HLW	DATE :	8/2014
DRAWN BY : MAA	6/10	REV. 12/5/11	MAA/AAC
CHECKED BY : MKT	7/10		

REVISIONS						SHEET NO.
NO.	BY:	DATE:	NO.	BY:	DATE:	S-7
1			3			TOTAL SHEETS
2			4			46

STD. NO. 24PCS_30_120S_70L

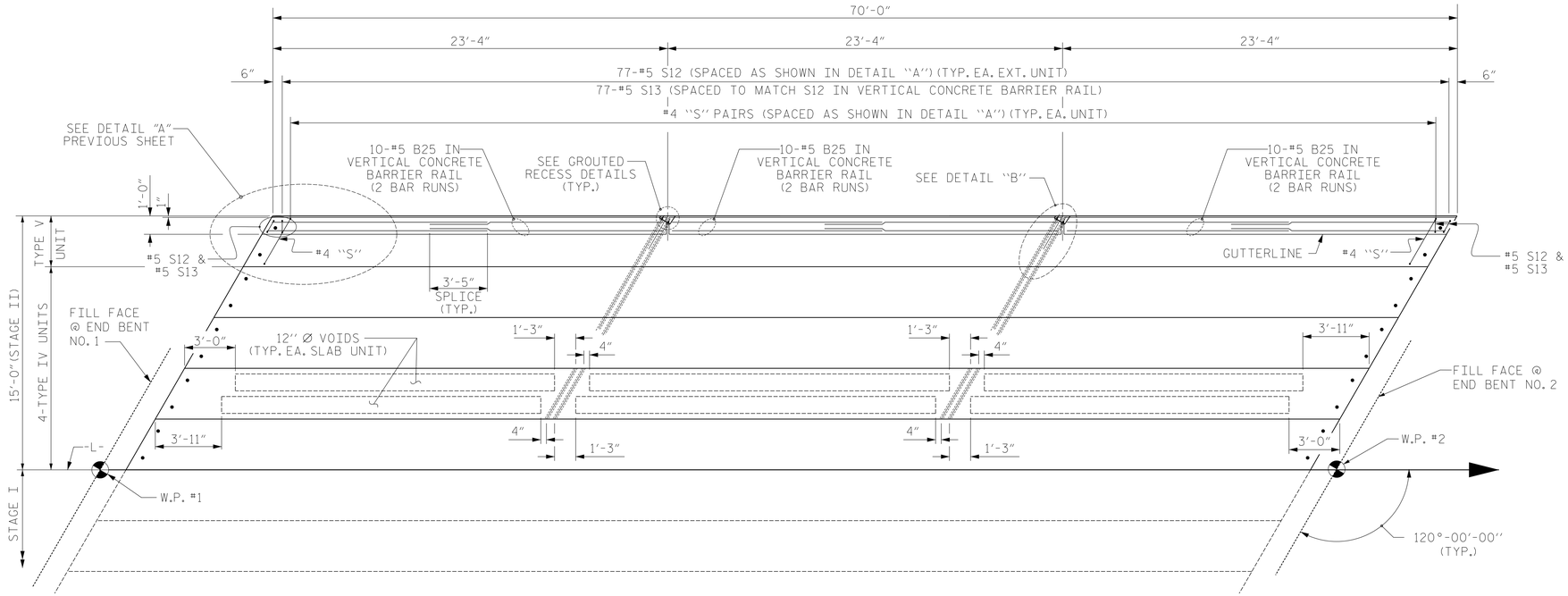

PLAN OF UNIT - STAGE II

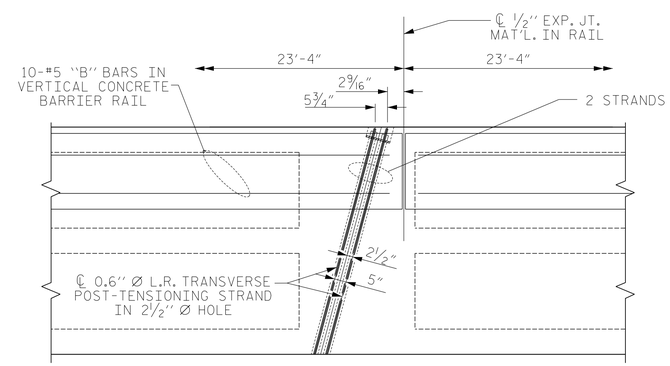

DETAIL "B"

#4 S11 BARS MAY BE SHIFTED AS NECESSARY TO MAINTAIN 1" CLEAR TO GROUTED RECESS AND 2 1/2" Ø TRANSVERSE POST-TENSIONING STRAND HOLES

DocuSigned by:
Hardy Willis
C0287FC0D223461...
10/30/2015

PROJECT NO. 17BP.14.R.135

TRANSYLVANIA COUNTY

STATION: 12+87.25 -L-

SHEET 4 OF 5

STATE OF NORTH CAROLINA
DEPARTMENT OF TRANSPORTATION
RALEIGH

PLAN OF 70' UNIT
27'-10" CLEAR ROADWAY
120° SKEW
STAGE II

REVISIONS						SHEET NO.
NO.	BY:	DATE:	NO.	BY:	DATE:	S-8
1			3			TOTAL SHEETS
2			4			46

ASSEMBLED BY : MAF		DATE : 8/2014	
CHECKED BY : HLW		DATE : 8/2014	
DRAWN BY : MAA	6/10	REV. 12/5/11	MAA/AAC
CHECKED BY : MKT	7/10		

STD. NO. 24PCS_30_120S_70L

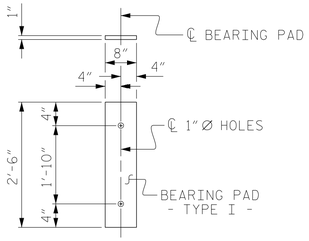

FIXED END
(TYPE I - 20 REQ'D)

ELASTOMERIC BEARING DETAILS

ELASTOMER IN ALL BEARINGS SHALL BE 60 DUROMETER HARDNESS.

BILL OF MATERIAL FOR VERTICAL CONCRETE BARRIER RAIL						
BAR	BARS PER PAIR OF EXTERIOR UNITS	TOTAL NO.	SIZE	TYPE	LENGTH	WEIGHT
	70' UNIT					
*B25	120	120	#5	STR	13'-8"	1711
*S13	158	158	#5	2	7'-2"	1181
* EPOXY COATED REINFORCING STEEL				LBS.		2892
CLASS AA CONCRETE				CU.YDS.		18.9
TOTAL VERTICAL CONCRETE BARRIER RAIL				LN. FT.		140.29

GUTTERLINE ASPHALT THICKNESS & RAIL HEIGHT		
30' SUPER ELEV	ASPHALT OVERLAY THICKNESS @ MID-SPAN	RAIL HEIGHT @ MID-SPAN
70' UNITS	1¾"	3'-8"

DEAD LOAD DEFLECTION AND CAMBER	
	3'-0" x 2'-0"
70' CORED SLAB UNIT	0.6" Ø L.R. STRAND
CAMBER (SLAB ALONE IN PLACE)	4 5/16" ↑
DEFLECTION DUE TO SUPERIMPOSED DEAD LOAD**	13/16" ↓
FINAL CAMBER	3½" ↑

** INCLUDES FUTURE WEARING SURFACE

BAR TYPES

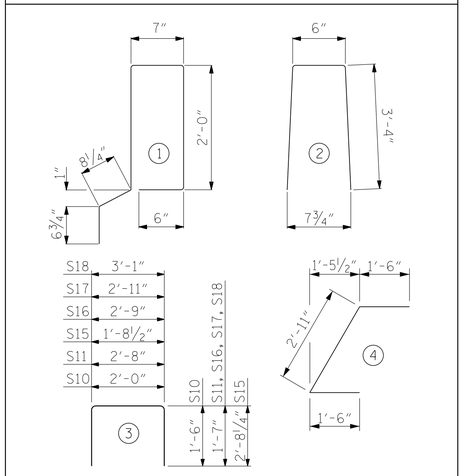

ALL BAR DIMENSIONS ARE OUT TO OUT

NOTES

ALL PRESTRESSING STRANDS SHALL BE 7-WIRE LOW RELAXATION GRADE 270 STRANDS AND SHALL CONFORM TO AASHTO M203 EXCEPT FOR SAMPLING REQUIREMENTS WHICH SHALL BE IN ACCORDANCE WITH THE STANDARD SPECIFICATIONS.

ALL REINFORCING STEEL CAST WITH THE CORED SLAB SECTIONS SHALL BE GRADE 60 AND SHALL BE INCLUDED IN THE UNIT PRICE BID FOR PRESTRESSED CONCRETE CORED SLABS.

RECESSES FOR TRANSVERSE STRANDS SHALL BE GROUTED AFTER THE TENSIONING OF THE STRANDS.

THE 2½" Ø DOWEL HOLES AT FIXED ENDS OF SLAB SECTIONS SHALL BE FILLED WITH NON-SHRINK GROUT.

THE BACKER RODS SHALL CONFORM TO THE REQUIREMENTS OF TYPE M BOND BREAKER. SEE SECTION 1028 OF THE STANDARD SPECIFICATIONS.

WHEN CORED SLABS ARE CAST, AN INTERNAL HOLD-DOWN SYSTEM SHALL BE EMPLOYED TO PREVENT VOIDS FROM RISING OR MOVING SIDEWAYS. AT LEAST SIX WEEKS PRIOR TO CASTING CORED SLABS, THE CONTRACTOR SHALL SUBMIT TO THE ENGINEER FOR REVIEW AND COMMENT, DETAILED DRAWINGS OF THE PROPOSED HOLD-DOWN SYSTEM. IN ADDITION TO STRUCTURAL DETAILS, LOCATION AND SPACING OF THE HOLD-DOWNS SHALL BE INDICATED.

THE TRANSFER OF LOAD FROM THE ANCHORAGES TO THE CORED SLAB UNIT SHALL BE DONE WHEN THE CONCRETE HAS REACHED A COMPRESSIVE STRENGTH OF NOT LESS THAN THE REQUIRED STRENGTH SHOWN IN THE "CONCRETE RELEASE STRENGTH" TABLE.

ALL REINFORCING STEEL IN VERTICAL CONCRETE BARRIER RAILS SHALL BE EPOXY COATED.

PRESTRESSING STRANDS SHALL BE CUT FLUSH WITH THE CORED SLAB UNIT ENDS.

APPLY EPOXY PROTECTIVE COATING TO CORED SLAB UNIT ENDS.

GROOVED CONTRACTION JOINTS, ½" IN DEPTH, SHALL BE TOOLED IN ALL EXPOSED FACES OF THE BARRIER RAIL AND IN ACCORDANCE WITH ARTICLE 825-10(B) OF THE STANDARD SPECIFICATIONS. A CONTRACTION JOINT SHALL BE LOCATED AT EACH THIRD POINT BETWEEN BARRIER RAIL EXPANSION JOINTS. ONLY ONE CONTRACTION JOINT IS REQUIRED AT MIDPOINT OF BARRIER RAIL SEGMENTS LESS THAN 20 FEET IN LENGTH AND NO CONTRACTION JOINTS ARE REQUIRED FOR THOSE SEGMENTS LESS THAN 10 FEET IN LENGTH.

TRANSVERSE POST TENSIONING OF THE CORED SLAB UNITS SHALL BE DONE IN ACCORDANCE WITH THE STANDARD SPECIFICATIONS.

MAINTAIN A SYMMETRIC TENSION FORCE BETWEEN EACH PAIR OF TRANSVERSE POST TENSIONING STRANDS IN THE DIAPHRAGM.

THE #4 S11 STIRRUPS MAY BE SHIFTED AS NECESSARY TO MAINTAIN 1" CLEAR TO THE GROUTED RECESS.

FOR GROUT FOR STRUCTURES, SEE SPECIAL PROVISIONS.

BILL OF MATERIAL FOR ONE 70' CORED SLAB UNIT							
				EXTERIOR UNIT		INTERIOR UNIT	
BAR	NUMBER	SIZE	TYPE	LENGTH	WEIGHT	LENGTH	WEIGHT
B22	6	#4	STR	24'-6"	98	24'-6"	98
S10	8	#5	3	5'-0"	42	5'-0"	42
S11	170	#4	3	5'-10"	662	5'-10"	662
*S12	79	#5	1	6'-4"	522		
S14	4	#4	4	5'-11"	16	5'-11"	16
S15	4	#5	3	7'-1"	30	7'-1"	30
S16	4	#4	3	5'-11"	16	5'-11"	16
S17	4	#4	3	6'-1"	16	6'-1"	16
S18	4	#4	3	6'-3"	17	6'-3"	17
REINFORCING STEEL			LBS.		897		897
* EPOXY COATED REINFORCING STEEL			LBS.		522		
8000 P.S.I. CONCRETE			CU. YDS.		12.0		12.0
0.6" Ø L.R. STRANDS			No.		28		28

CORED SLABS REQUIRED			
	NUMBER	LENGTH	TOTAL LENGTH
70' UNIT			
EXTERIOR C.S.	2	70'-0"	140'-0"
INTERIOR C.S.	8	70'-0"	560'-0"
TOTAL	10		700'-0"

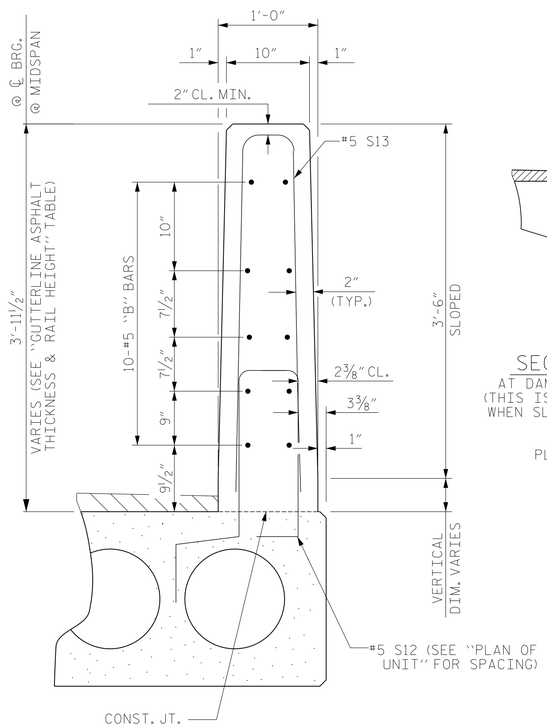

SECTION THRU RAIL

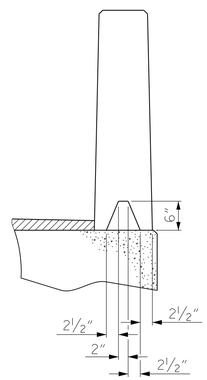

SECTION S-S
AT DAM IN OPEN JOINT
(THIS IS TO BE USED ONLY WHEN SLIP FORM IS USED)

℄ ½" EXP. JT. MAT'L HELD IN PLACE WITH GALVANIZED NAILS. (NOTE: OMIT EXP. JT. MAT'L. WHEN SLIP FORM IS USED)

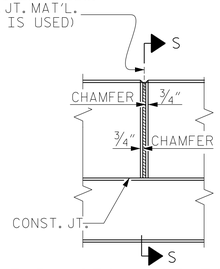

ELEVATION AT EXPANSION JOINTS

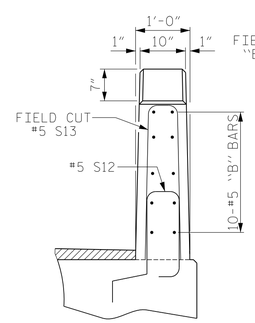

END VIEW

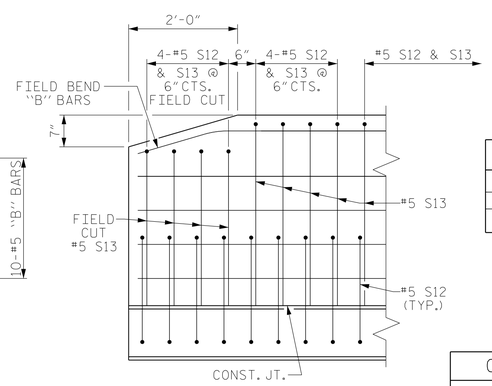

SIDE VIEW

CONCRETE RELEASE STRENGTH	
UNIT	PSI
70' UNITS	5500

GRADE 270 STRANDS	
	0.6" Ø L.R.
AREA (SQUARE INCHES)	0.217
ULTIMATE STRENGTH (LBS. PER STRAND)	58,600
APPLIED PRESTRESS (LBS. PER STRAND)	43,950

VERTICAL CONCRETE BARRIER RAIL DETAILS

END OF RAIL DETAILS

DocuSigned by: Hardy Willis
CC287FCF0223461...
10/30/2015

PROJECT NO. 17BP.14.R.135
TRANSYLVANIA COUNTY
STATION: 12+87.25 -L-

SHEET 5 OF 5

STATE OF NORTH CAROLINA
DEPARTMENT OF TRANSPORTATION
RALEIGH

STANDARD

3'-0" X 2'-0"
PRESTRESSED CONCRETE
CORED SLAB UNIT

ASSEMBLED BY : MAF	DATE : 8/2014
CHECKED BY : HLW	DATE : 8/2014
DRAWN BY : MAA 6/10	REV. 12/11 MAA/AAC
CHECKED BY : MKT 7/10	

REVISIONS						SHEET NO.
NO.	BY:	DATE:	NO.	BY:	DATE:	S-9
1			3			TOTAL SHEETS
2			4			46

STD. NO. 24PCS3_30_60&120S

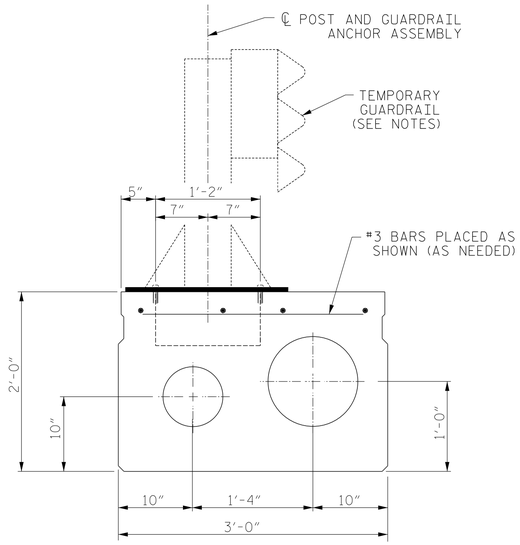

SECTION OF ANCHOR ASSEMBLY LOCATION

(TYPE III UNIT - STAGE I)
THE #3 BARS ARE INCIDENTAL AND THEIR COST SHALL BE INCLUDED IN THE PRICE BID FOR THE PRESTRESSED CONCRETE CORED SLABS.

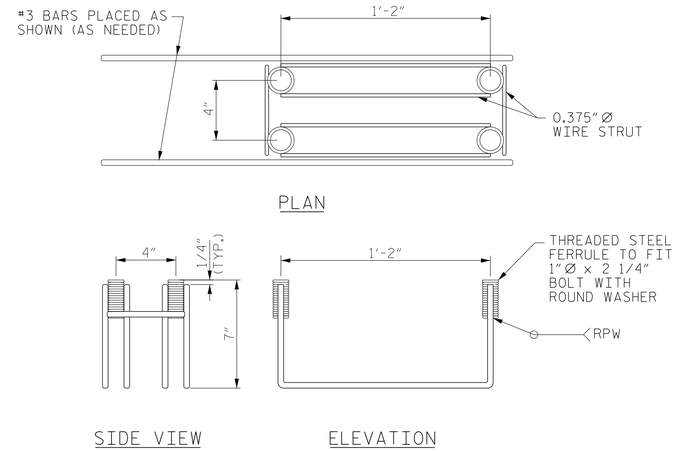

MINIMUM LENGTH OF THREADS IN INSERT (FERRULE): 2 1/2"

TEMPORARY GUARDRAIL ANCHOR ASSEMBLY

(14 ASSEMBLIES REQUIRED IN THE TYPE III CORED SLAB UNITS)
(6 ASSEMBLIES REQUIRED IN THE APPROACH SLABS)

NOTES

THE TEMPORARY GUARDRAIL ANCHOR ASSEMBLY SHALL CONSIST OF THE FOLLOWING COMPONENTS:

A. FERRULES SHALL BE MADE FROM STEEL MEETING THE REQUIREMENTS OF AASHTO M169, GRADE 12L14 AND SHALL HAVE A MINIMUM LENGTH OF THREADS OF 2½".

B. 4 - 1" Ø X 2¼" BOLTS WITH WASHERS. BOLTS SHALL CONFORM TO THE REQUIREMENTS OF ASTM A307. BOLTS AND WASHERS SHALL BE GALVANIZED. (AT THE CONTRACTOR'S OPTION STAINLESS STEEL BOLTS AND WASHERS MAY BE USED AS AN ALTERNATE FOR THE 1" Ø X 2¼" GALVANIZED BOLTS AND WASHERS. THEY SHALL CONFORM TO OR EXCEED THE MECHANICAL REQUIREMENTS OF ASTM A307. THE USE OF THIS ALTERNATE SHALL BE APPROVED BY THE ENGINEER.)

C. WIRE STRUTS SHOWN IN THE TEMPORARY GUARDRAIL ANCHOR ASSEMBLY DETAIL ARE THE MINIMUM ALLOWABLE SIZE AND SHALL HAVE A MINIMUM TENSILE STRENGTH OF 100,000 PSI.

TEMPORARY GUARDRAIL ANCHOR ASSEMBLY WITH BOLTS SHALL BE ASSEMBLED IN THE SHOP. BOLT THREADS MAY BE RECUT AS NECESSARY TO ENSURE FIT.

THE COST OF THE TEMPORARY GUARDRAIL ANCHOR ASSEMBLY COMPLETE IN PLACE SHALL BE INCLUDED, AS APPLICABLE, IN THE UNIT CONTRACT PRICE BID FOR 3'-0" X 2'-0" PRESTRESSED CONCRETE CORED SLAB OR LUMP SUM PRICE BID FOR APPROACH SLABS.

FERRULES SHALL BE PLUGGED DURING CASTING OF THE CORED SLAB UNITS OR POURING OF APPROACH SLAB AS RECOMMENDED BY THE MANUFACTURER.

AT THE CONTRACTOR'S OPTION, FERRULES WITH OPEN OR CLOSED ENDS MAY BE USED.

PAYMENT FOR TEMPORARY GUARDRAIL, POST, AND POST BASE PLATES IS INCLUDED IN ROADWAY PAY ITEMS.

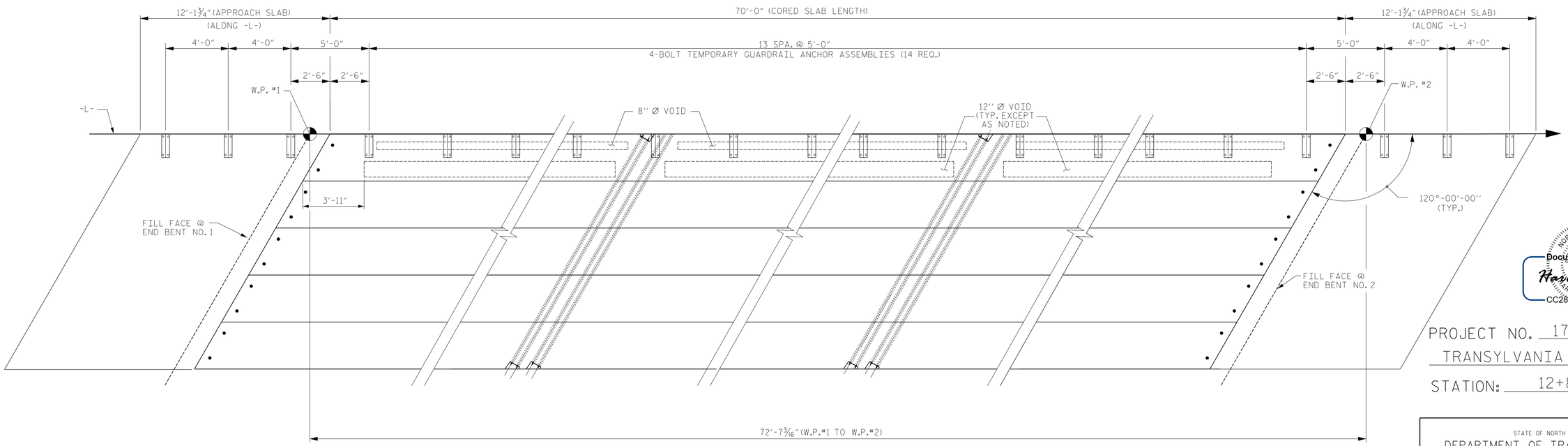

RAIL POST SPACING FOR TEMPORARY GUARDRAIL - STAGE I

DocuSigned by:
Hardy Willis
CC287FCFE223461...
10/30/2015

PROJECT NO. 17BP.14.R.135
TRANSYLVANIA COUNTY
STATION: 12+87.25 -L-

STATE OF NORTH CAROLINA
DEPARTMENT OF TRANSPORTATION
RALEIGH

ANCHORAGE DETAILS FOR TEMPORARY GUARDRAIL ANCHOR ASSEMBLY FOR TYPE III CORED SLAB UNIT - STAGE I

ASSEMBLED BY : MAF	DATE : 8/2014		
CHECKED BY : HLW	DATE : 8/2014		
DRAWN BY : DGE 5/09	REV. 12/11 MAA/AAC		
CHECKED BY : BCH 6/09	.		

REVISIONS						SHEET NO.
NO.	BY:	DATE:	NO.	BY:	DATE:	S-10
1			3			TOTAL SHEETS
2			4			46

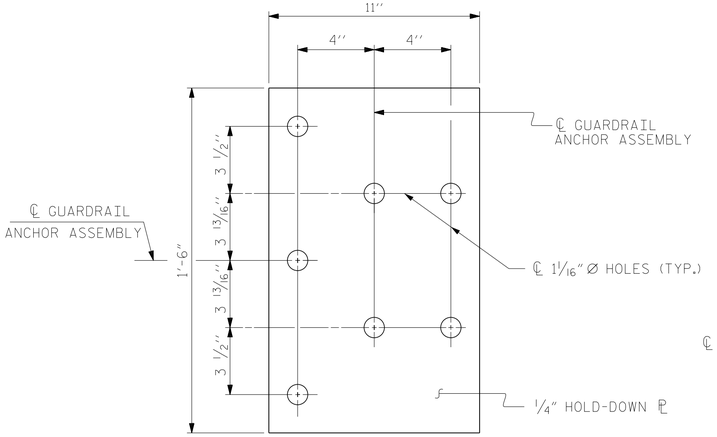

PLAN

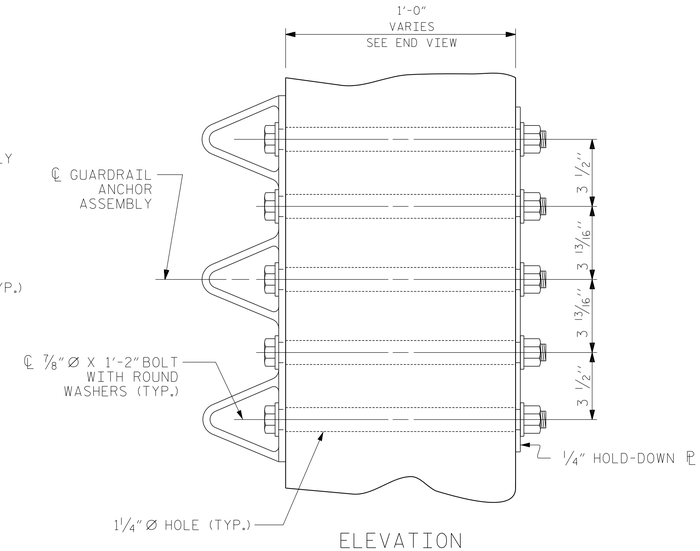

ELEVATION

GUARDRAIL ANCHOR ASSEMBLY DETAILS

NOTES

THE GUARDRAIL ANCHOR ASSEMBLY SHALL CONSIST OF A 1/4" HOLD DOWN PLATE AND 7 - 7/8" Ø BOLTS WITH NUTS AND WASHERS.

THE HOLD-DOWN PLATE SHALL CONFORM TO AASHTO M270 GRADE 36. AFTER FABRICATION, THE HOLD-DOWN PLATE SHALL BE HOT-DIP GALVANIZED IN ACCORDANCE WITH AASHTO M111.

BOLTS SHALL CONFORM TO THE REQUIREMENTS OF ASTM A307 AND NUTS SHALL CONFORM TO THE REQUIREMENTS OF AASHTO M291. BOLTS, NUTS AND WASHERS SHALL BE GALVANIZED. (AT THE CONTRACTOR'S OPTION, STAINLESS STEEL BOLTS, NUTS AND WASHERS MAY BE USED AS AN ALTERNATE FOR THE 7/8" Ø GALVANIZED BOLTS, NUTS AND WASHERS. THEY SHALL CONFORM TO OR EXCEED THE MECHANICAL REQUIREMENTS OF ASTM A307. THE USE OF THIS ALTERNATE SHALL BE APPROVED BY THE ENGINEER.)

THE GUARDRAIL ANCHOR ASSEMBLY IS REQUIRED AT ALL POINTS WHERE APPROACH GUARDRAIL IS TO BE ATTACHED TO THE END OF BARRIER RAIL. FOR POINTS OF ATTACHMENT, SEE SKETCH.

AFTER INSTALLATION, THE EXPOSED THREAD OF THE BOLT SHALL BE BURRED WITH A SHARP POINTED TOOL.

THE COST OF THE GUARDRAIL ANCHOR ASSEMBLY SHALL BE INCLUDED IN THE UNIT CONTRACT PRICE BID FOR VERTICAL CONCRETE BARRIER RAIL.

THE VERTICAL REINFORCING BARS MAY BE SHIFTED SLIGHTLY IN THE VERTICAL CONCRETE BARRIER RAIL TO CLEAR ASSEMBLY BOLTS.

THE 1 1/4" Ø HOLES SHALL BE FORMED OR DRILLED WITH A CORE BIT. IMPACT TOOLS WILL NOT BE PERMITTED. ANY CONCRETE DAMAGED BY THIS WORK SHALL BE REPAIRED TO THE SATISFACTION OF THE ENGINEER.

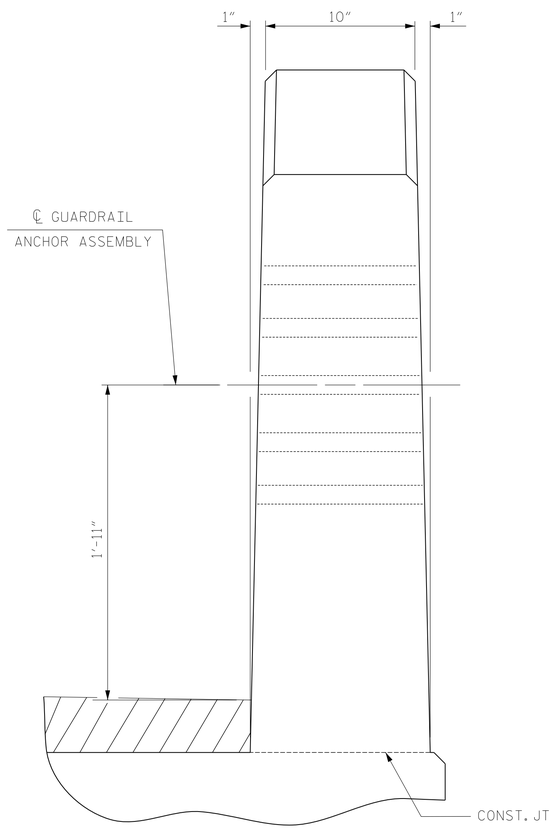

END VIEW

GUARDRAIL ANCHOR ASSEMBLY DETAILS

(VERTICAL CONCRETE BARRIER RAIL)

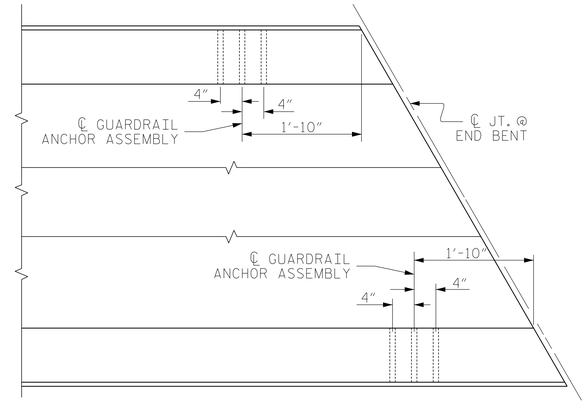

PLAN

LOCATION OF ANCHORS FOR GUARDRAIL

END BENT #2 SHOWN, END BENT #1 SIMILAR.

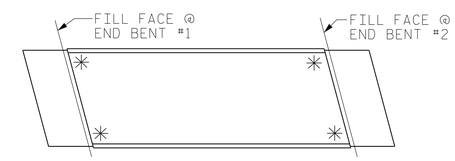

SKETCH SHOWING POINTS OF ATTACHMENT

✳ DENOTES GUARDRAIL ANCHOR ASSEMBLY

PROJECT NO. 17BP.14.R.135

TRANSYLVANIA COUNTY

STATION: 12+87.25 -L-

NORTH CAROLINA PROFESSIONAL SEAL ENGINEER

DocuSigned by: Hardy Willis CC287FCF0023461...

10/30/2015

STATE OF NORTH CAROLINA
DEPARTMENT OF TRANSPORTATION
RALEIGH

STANDARD

GUARDRAIL ANCHORAGE FOR VERTICAL CONCRETE BARRIER RAIL

REVISIONS						SHEET NO.
NO.	BY:	DATE:	NO.	BY:	DATE:	S-11
1			3			TOTAL SHEETS
2			4			46

ASSEMBLED BY : RWW		DATE : 8/2014	
CHECKED BY : HLW		DATE : 8/2014	
DRAWN BY : MAA 5/10	REV. 10/1/11 MAA/GM		
CHECKED BY : GM 5/10	REV. 12/5/11 MAA/GM		
	REV. 6/13 MAA/GM		

(SHT. 2) STD. NO. GRA3

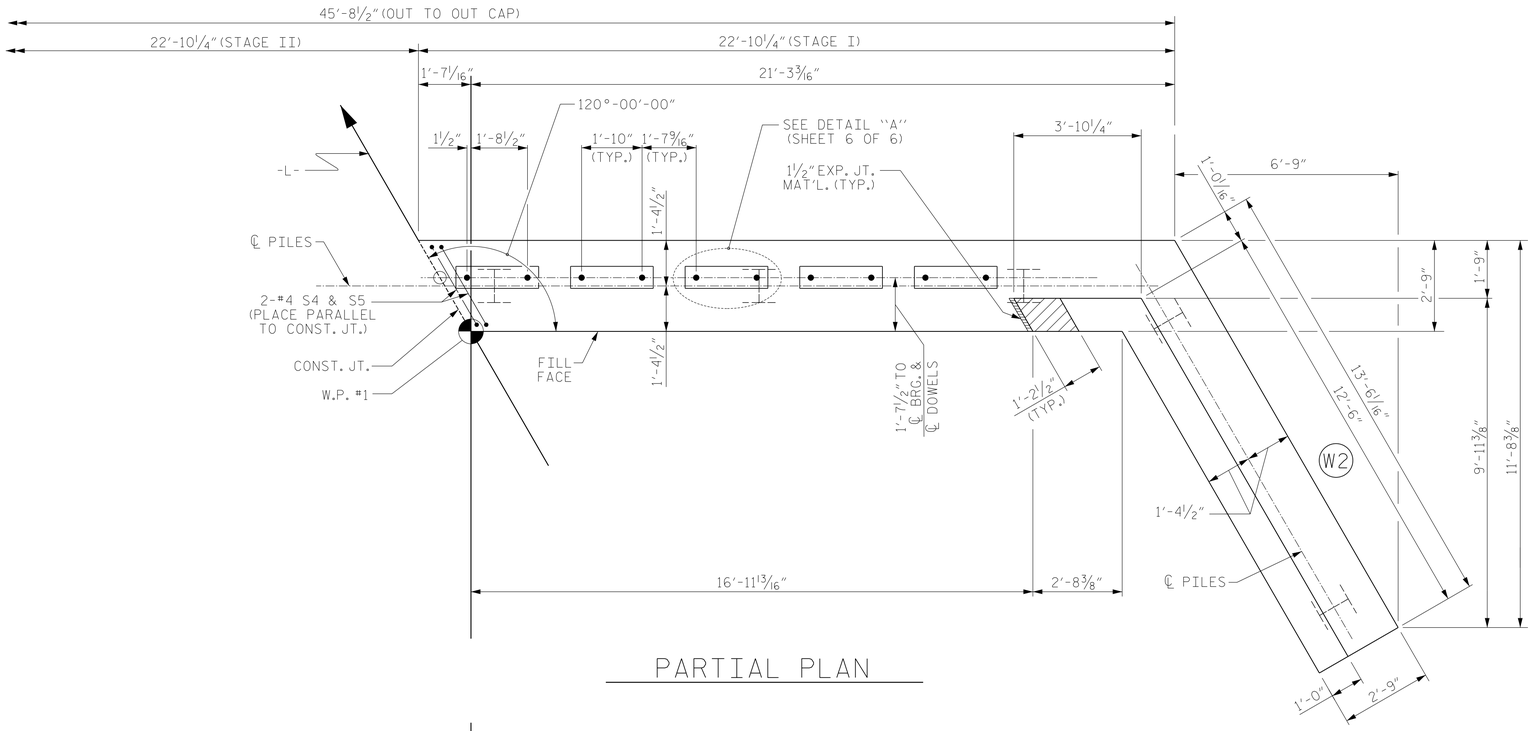

PARTIAL PLAN

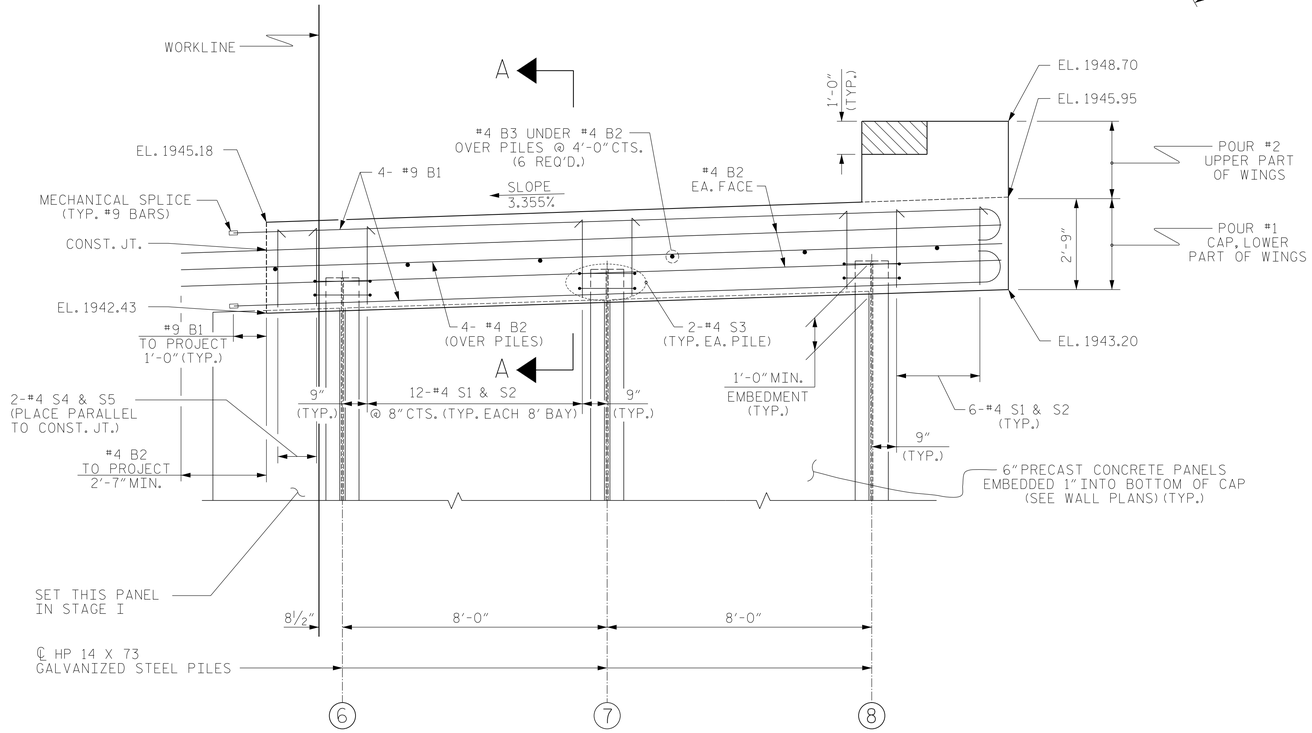

PARTIAL ELEVATION

WINGS NOT SHOWN FOR CLARITY.
FOR SECTION A-A, SEE SHEET 6 OF 6.
SEE RETAINING WALL PLANS FOR FURTHER INFORMATION ON PILES AND PANELS.

NOTES

STIRRUPS IN CAP MAY BE SHIFTED AS NECESSARY TO CLEAR DOWELS.

THE CONCRETE IN THE SHADED AREA OF THE WING SHALL BE POURED AFTER THE VERTICAL CONCRETE BARRIER RAIL IS CAST IF SLIP FORMING IS USED.

FOR PILE SPLICE DETAILS, SEE SHEET 6 OF 6.

FOR WING DETAILS, SEE SHEET 4 & 5 OF 6.

VERIFY PANEL HEIGHT IN FIELD AFTER 2'-0" CONCRETE LEVELING PAD IS POURED.

GALVANIZE THE FULL LENGTH OF EACH END BENT PILE IN ACCORDANCE WITH SECTION 1076 OF THE STANDARD SPECIFICATIONS.

DocuSigned by: Hardy Willis
CC287FCF0223461...
10/30/2015

PROJECT NO. 17BP.14.R.135
TRANSYLVANIA COUNTY
STATION: 12+87.25 -L-

SHEET 1 OF 6

STATE OF NORTH CAROLINA
DEPARTMENT OF TRANSPORTATION
RALEIGH

SUBSTRUCTURE
END BENT No. 1
STAGE I

Vaughn & Melton
Consulting Engineers
Asheville, North Carolina 828-253-2796
Charlotte, North Carolina 704-357-0468
Tri-Cities, Tennessee 423-467-8401
Knoxville, Tennessee 865-546-5800
Middlesboro, Kentucky 606-248-6600
Spartanburg, South Carolina 864-574-4775
Copyright © 2006 Vaughn & Melton, Inc. All Rights Reserved

DWN. BY: AW DATE: 8/2014
CHKD. BY: HLW DATE: 8/2014
DES. EGR. OF RECORD: TSA DATE: 8/2014

REVISIONS						
NO.	BY:	DATE:	NO.	BY:	DATE:	
1			3			
2			4			

SHEET NO. S-12
TOTAL SHEETS 46

SEE SHEET 1 OF 6 FOR NOTES.

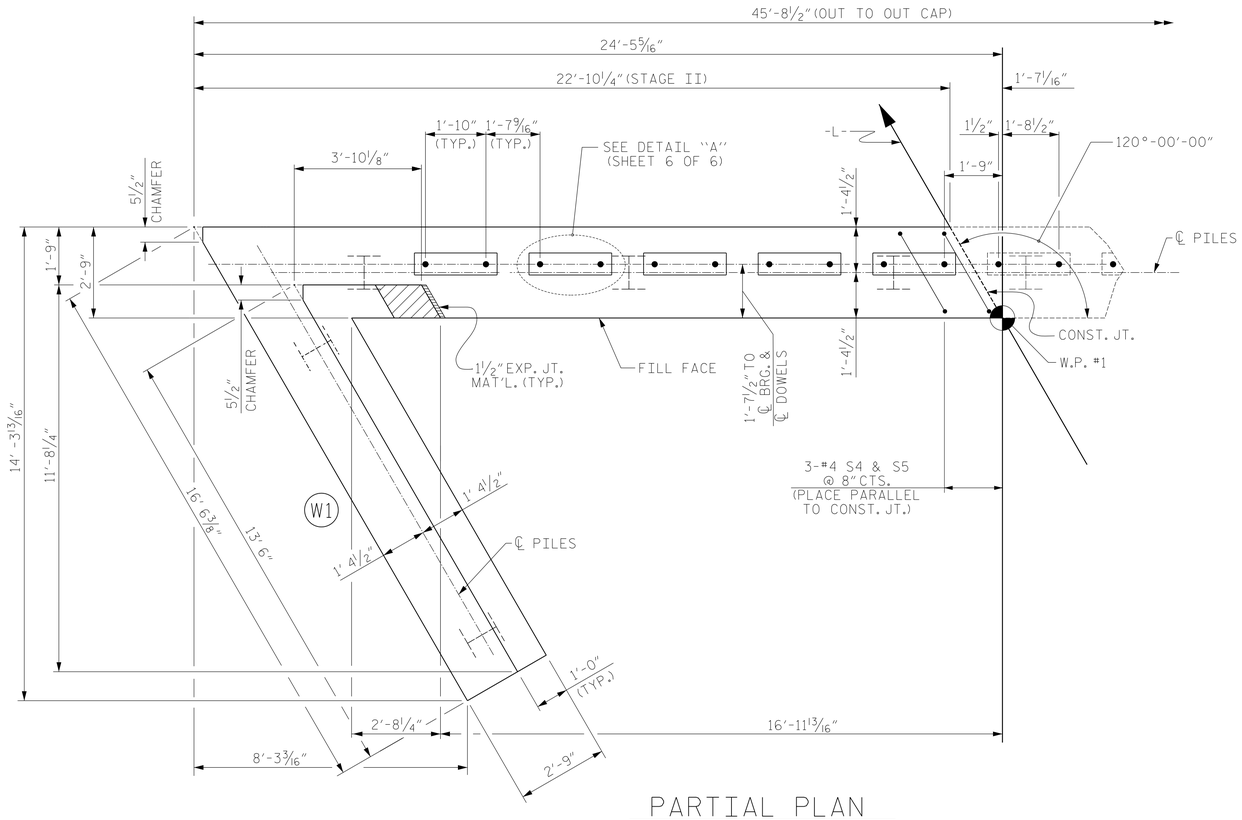

PARTIAL PLAN

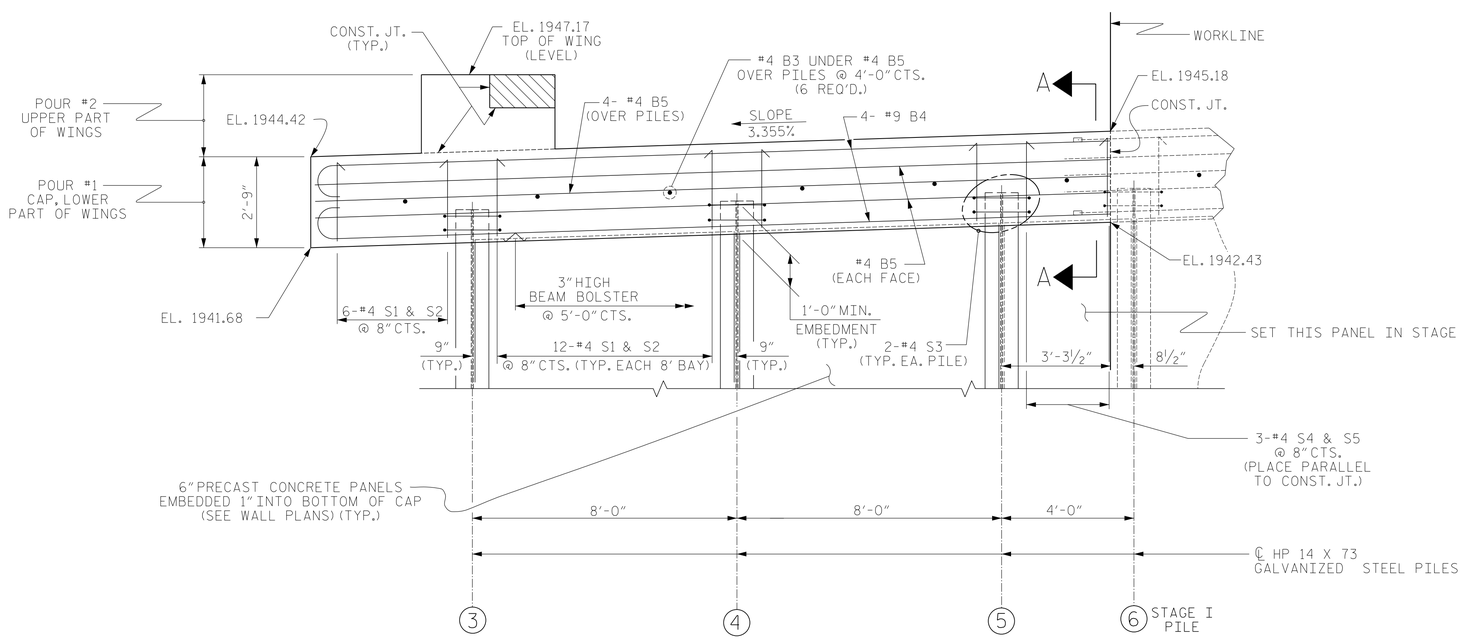

PARTIAL ELEVATION

WINGS NOT SHOWN FOR CLARITY.
FOR SECTION A-A, SEE SHEET 6 OF 6.
SEE RETAINING WALL PLANS FOR FURTHER INFORMATION ON PILES AND PANELS.

DocuSigned by: Hardy Willis
CC2B7ECF0223481...
10/30/2015

PROJECT NO. 17BP.14.R.135
TRANSYLVANIA COUNTY
STATION: 12+87.25 -L-

SHEET 2 OF 6

STATE OF NORTH CAROLINA
DEPARTMENT OF TRANSPORTATION
RALEIGH

SUBSTRUCTURE
END BENT No. 1
STAGE II

V&M Vaughn & Melton Consulting Engineers
Asheville, North Carolina 828-253-2796
Charlotte, North Carolina 704-357-0488
Tri-Cities, Tennessee 423-467-8401
Knoxville, Tennessee 865-546-5800
Middlesboro, Kentucky 606-248-6600
Spartanburg, South Carolina 864-574-4775
Copyright © 2006 Vaughn & Melton, Inc. All Rights Reserved

DWN. BY: JDS DATE: 8/2014
CHKD. BY: HLW DATE: 8/2014
DES. EGR. OF RECORD: TSA DATE: 8/2014

REVISIONS						SHEET NO.
NO.	BY:	DATE:	NO.	BY:	DATE:	S-13
1			3			TOTAL SHEETS
2			4			46

NOTE: NUMBER ON CIRCLE DENOTES PILE NUMBER.

SEE RETAINING WALL PLANS FOR PRECAST PANEL DETAILS, AND ADDITIONAL PILE INSTALLATION DETAILS.

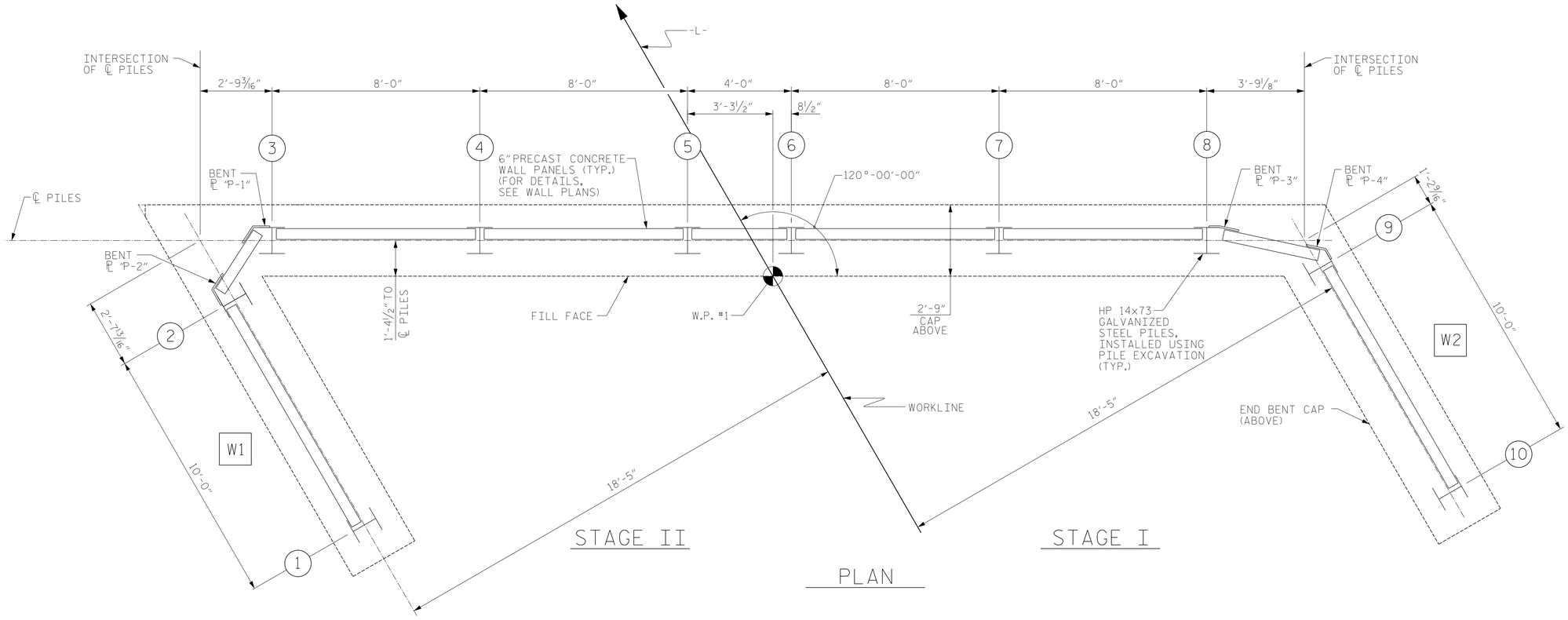

PLAN

TOP OF PILE ELEVATIONS	
1	1942.67
2	1942.67
3	1942.83
4	1943.10
5	1943.37
6	1943.50
7	1943.77
8	1944.04
9	1944.20
10	1944.20

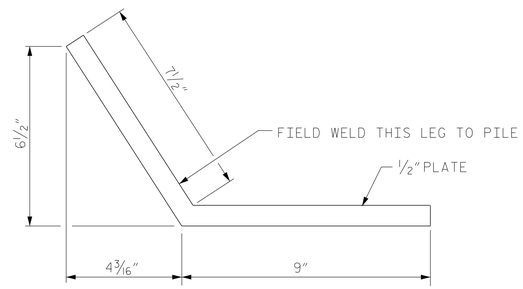

BENT PLATE "P-1"

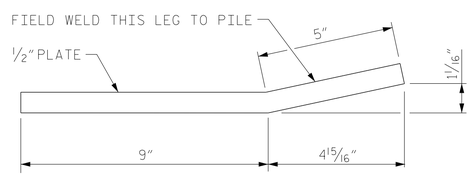

BENT PLATE "P-3"

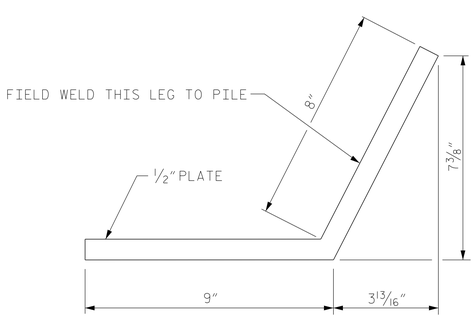

BENT PLATE "P-2"

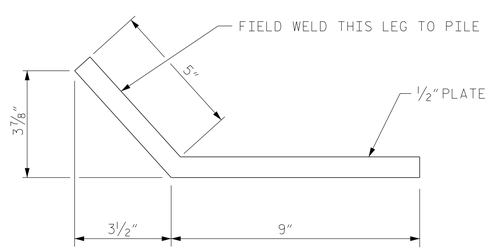

BENT PLATE "P-4"

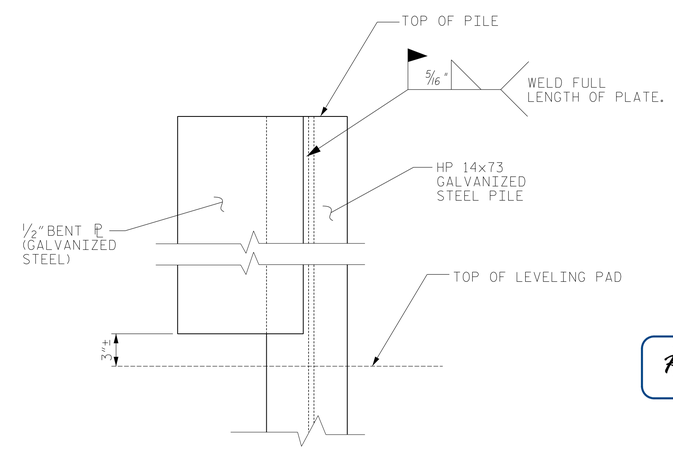

TYPICAL WELDING DETAIL FOR BENT PLATES

DocuSigned by: Hardy Willis CC297FCF022346... 10/30/2015

PROJECT NO. 17BP.14.R.135

TRANSYLVANIA COUNTY

STATION: 12+87.25 -L-

SHEET 3 OF 6

STATE OF NORTH CAROLINA
DEPARTMENT OF TRANSPORTATION
RALEIGH

SUBSTRUCTURE

END BENT NO. 1
PILE LAYOUT

V&M Vaughn & Melton Consulting Engineers
Charlotte, North Carolina 704-357-0488
Tri-Cities, Tennessee 423-467-8401
Knoxville, Tennessee 865-546-5800
Asheville, North Carolina 828-253-2796
Middlesboro, Kentucky 606-248-6600
Spartanburg, South Carolina 864-574-4715

Copyright © 2006 Vaughn & Melton, Inc. All Rights Reserved

DWN. BY: DPP DATE: 8/2014
CHKD. BY: HLW DATE: 8/2014
DES. EGR. OF RECORD: TSA DATE: 8/2014

REVISIONS								SHEET NO.
NO.	BY:	DATE:	NO.	BY:	DATE:			S-14
1			3					TOTAL SHEETS
2			4					46

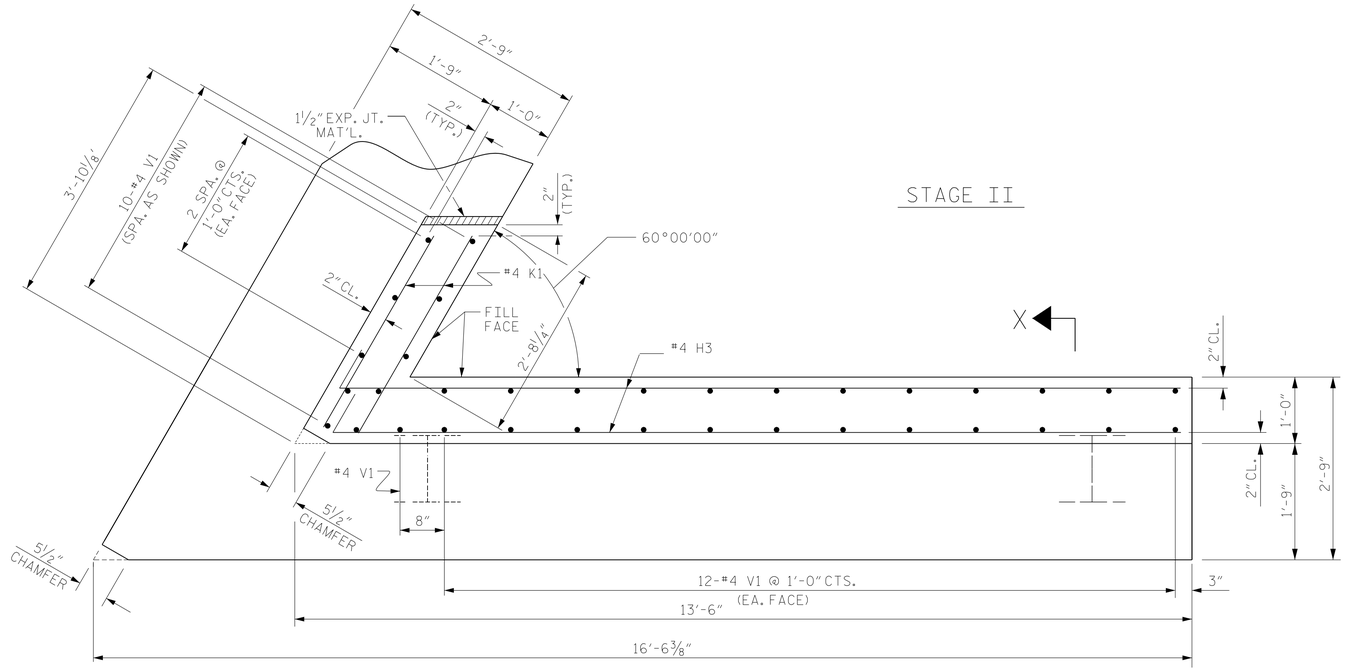

PLAN OF WING (W1)

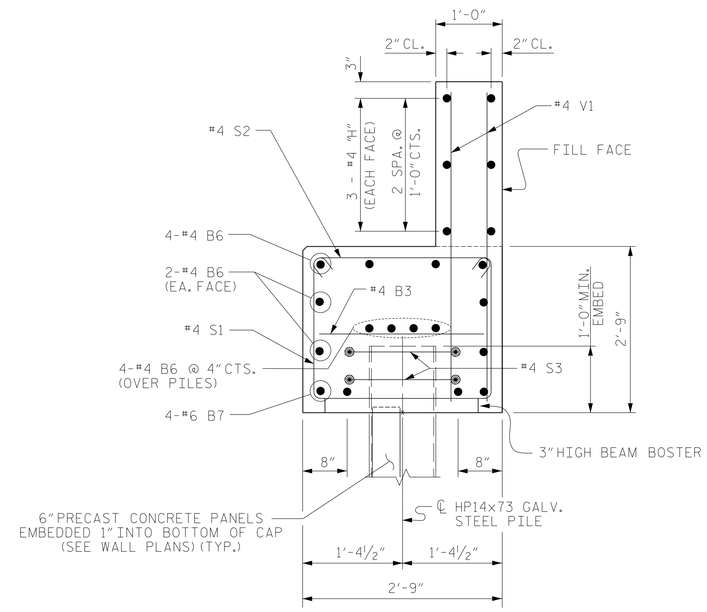

SECTION X-X

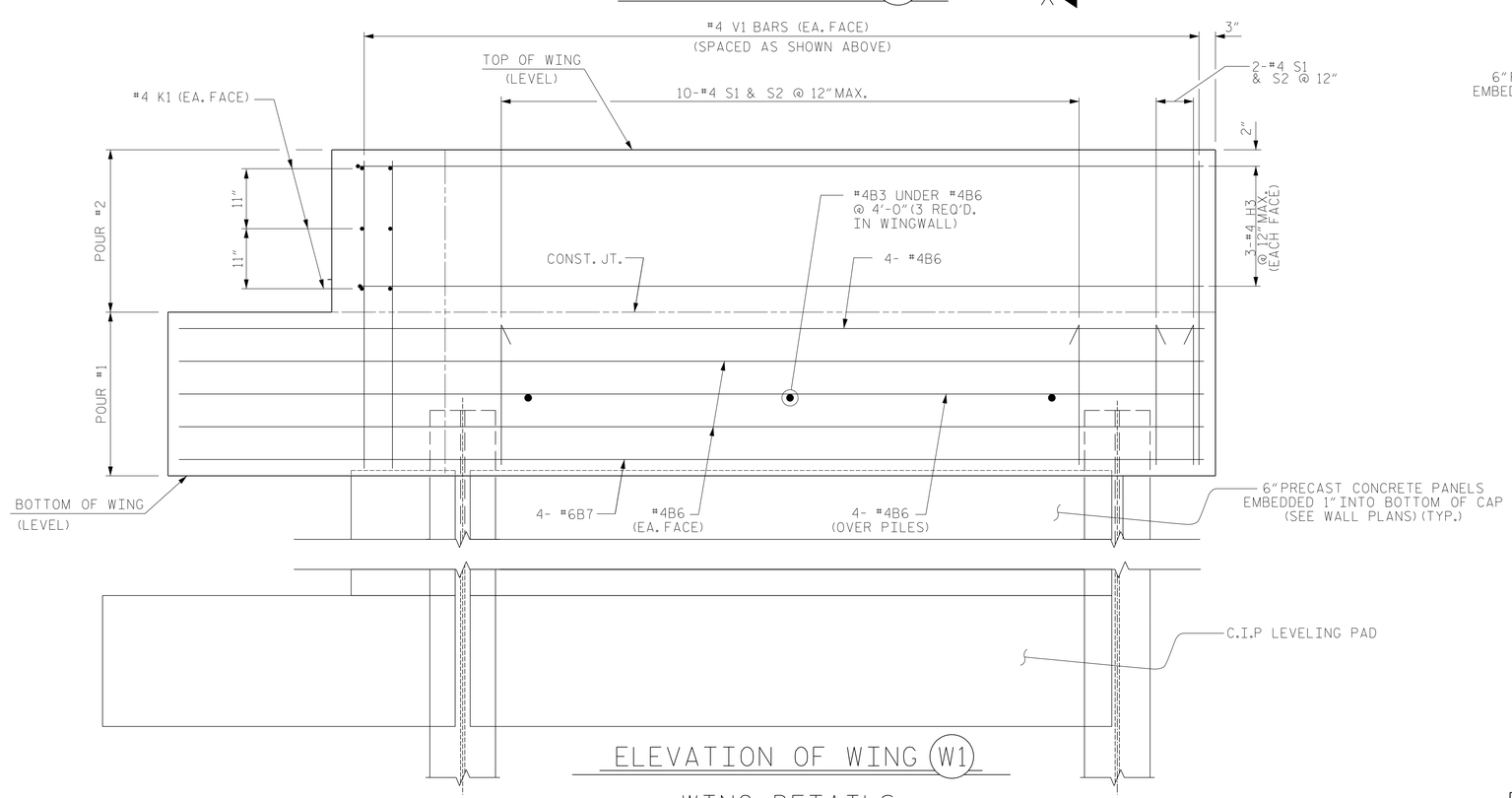

ELEVATION OF WING (W1)

WING DETAILS

Docusigned by: Hardy Willis
CC287FCF0223464...
10/30/2015

PROJECT NO. 17BP.14.R.135
TRANSYLVANIA COUNTY
STATION: 12+87.25 -L-

SHEET 4 OF 6

STATE OF NORTH CAROLINA
DEPARTMENT OF TRANSPORTATION
RALEIGH

SUBSTRUCTURE
END BENT NO. 1
WING W1 DETAILS
STAGE II

V&M
Vaughn & Melton
Consulting Engineers
Asheville, North Carolina 828-253-2796
Charlotte, North Carolina 704-357-0488
Tri-Cities, Tennessee 423-467-8401
Knoxville, Tennessee 865-546-5800
Middlesboro, Kentucky 606-248-6600
Spartanburg, South Carolina 864-574-4775
Copyright © 2006 Vaughn & Melton, Inc. All Rights Reserved

DWN. BY: AW DATE: 8/2014
CHKD. BY: HLW DATE: 8/2014
DES. EGR. OF RECORD: TSA DATE: 8/2014

REVISIONS						SHEET NO.
NO.	BY:	DATE:	NO.	BY:	DATE:	S-15
1			3			TOTAL SHEETS
2			4			46

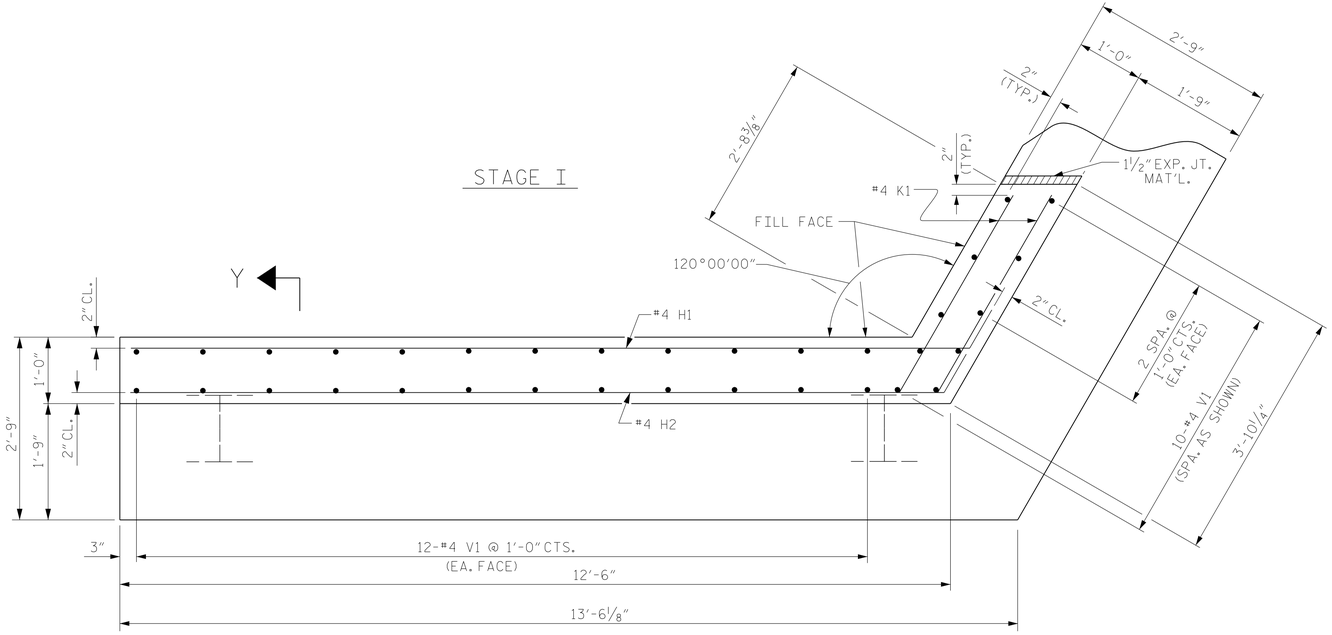

PLAN OF WING (W2)

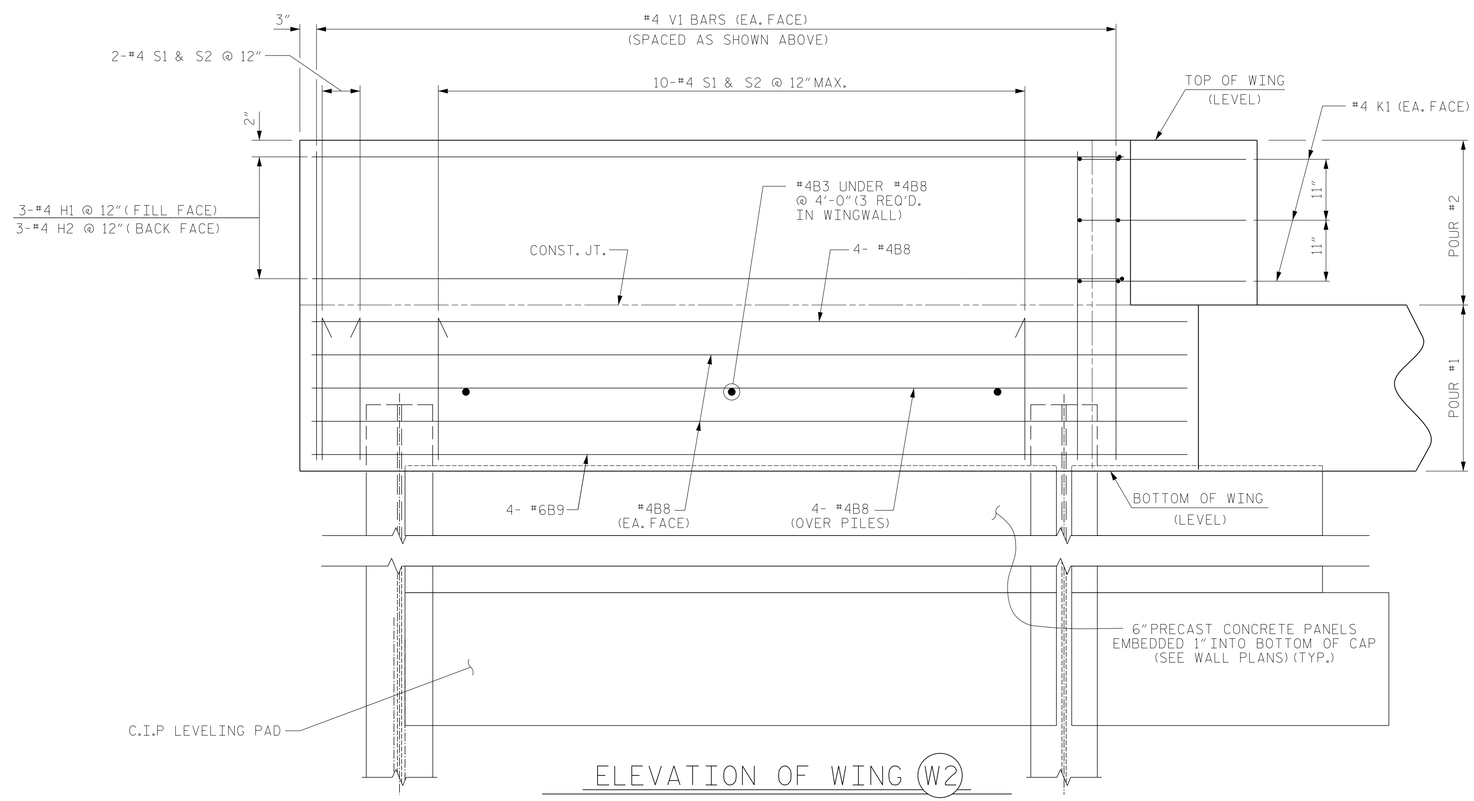

ELEVATION OF WING (W2)

WING DETAILS

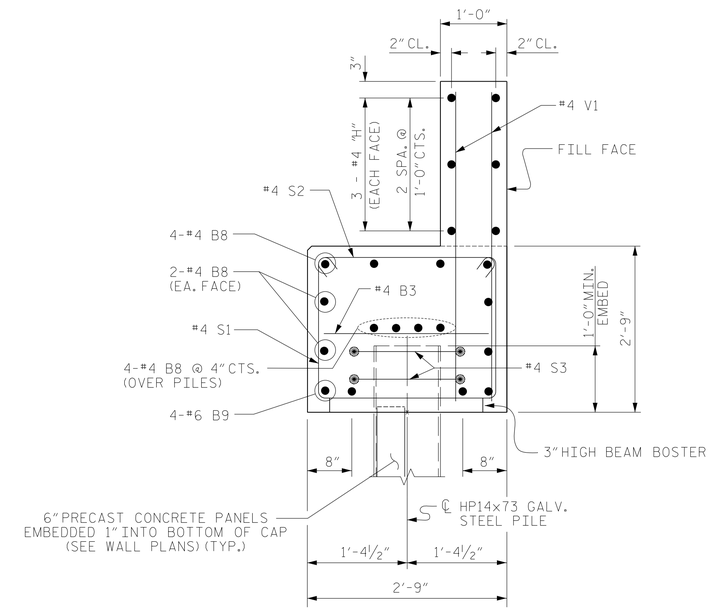

SECTION Y-Y

DocuSigned by:
Hardy Willis
CC257FCF022346...
10/30/2015

PROJECT NO. 17BP.14.R.135
TRANSYLVANIA COUNTY
STATION: 12+87.25 -L-

SHEET 5 OF 6

V&M
Vaughn & Melton
Consulting Engineers
Asheville, North Carolina 828-253-2796
Charlotte, North Carolina 704-357-0488
Tri-Cities, Tennessee 423-467-8401
Knoxville, Tennessee 865-546-5800
Middlesboro, Kentucky 606-248-6600
Spartanburg, South Carolina 864-574-4775

Copyright © 2006 Vaughn & Melton, Inc.
All Rights Reserved

STATE OF NORTH CAROLINA
DEPARTMENT OF TRANSPORTATION
RALEIGH

SUBSTRUCTURE
END BENT NO. 1
WING W2 DETAILS
STAGE I

DWN. BY: AW	DATE: 8/2014	
CHKD. BY: HLW	DATE: 8/2014	
DES. EGR. OF RECORD: TSA	DATE: 8/2014	

REVISIONS							
NO.	BY:	DATE:	NO.	BY:	DATE:	SHEET NO.	
1			3			S-16	
2			4			TOTAL SHEETS	
						46	

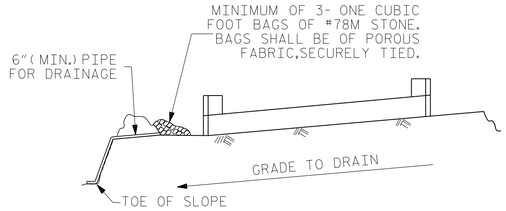

BAGGED STONE AND PIPE SHALL BE PLACED IMMEDIATELY AFTER COMPLETION OF END BENT EXCAVATION. PIPE MAY BE EITHER CONCRETE, CORRUGATED STEEL, CORRUGATED ALUMINUM ALLOY, OR CORRUGATED PLASTIC. PERFORATED PIPE WILL NOT BE ALLOWED.

BAGGED STONE SHALL REMAIN IN PLACE UNTIL THE ENGINEER DIRECTS THAT IT BE REMOVED. THE CONTRACTOR SHALL REMOVE AND DISPOSE OF SILT ACCUMULATIONS AT BAGGED STONE WHEN SO DIRECTED BY THE ENGINEER. BAGS SHALL BE REMOVED AND REPLACED WHENEVER THE ENGINEER DETERMINES THAT THEY HAVE DETERIORATED AND LOST THEIR EFFECTIVENESS.

NO SEPARATE PAYMENT WILL BE MADE FOR THIS WORK AND THE ENTIRE COST OF THIS WORK SHALL BE INCLUDED IN THE UNIT CONTRACT PRICE BID FOR THE SEVERAL PAY ITEMS.

TEMPORARY DRAINAGE AT END BENT

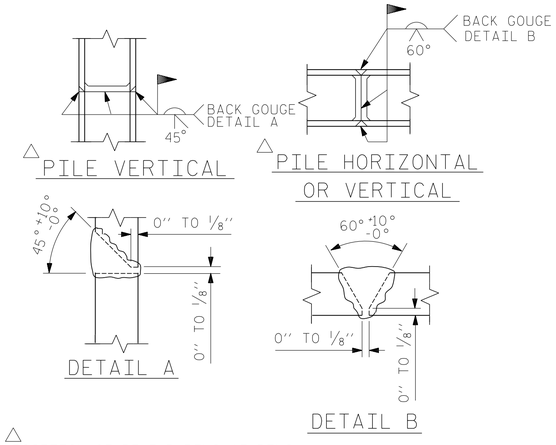

△ POSITION OF PILE DURING WELDING.

PILE SPLICE DETAILS

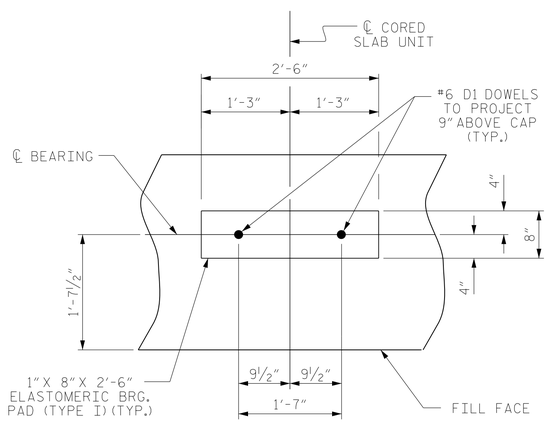

DETAIL "A"

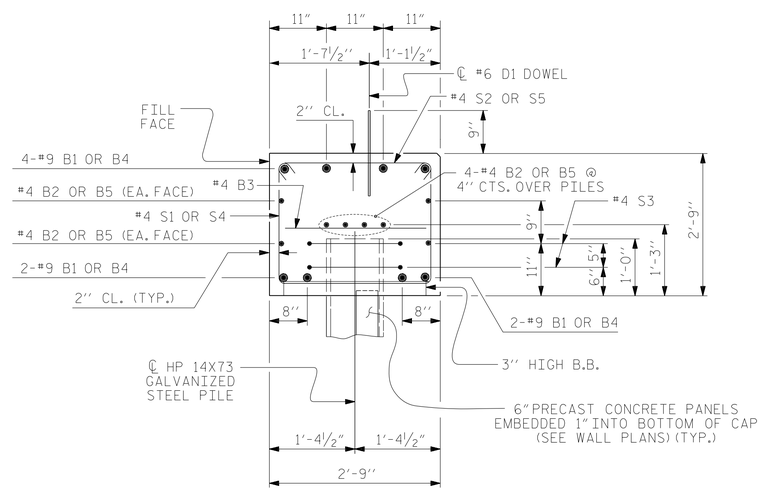

SECTION A-A

BAR TYPES

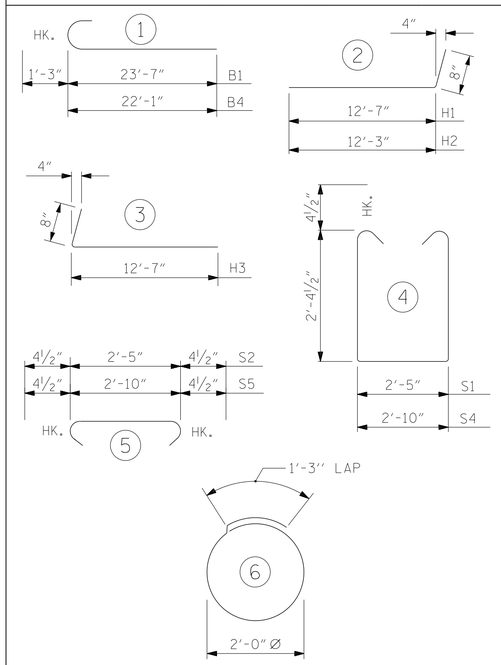

ALL BAR DIMENSIONS ARE OUT TO OUT.

BILL OF MATERIAL FOR END BENT #1

STAGE I

BAR	NO.	SIZE	TYPE	LENGTH	WEIGHT
B1	8	#9	1	24'-10"	676
B2	8	#4	STR	25'-3"	135
B3	9	#4	STR	2'-5"	15
B8	12	#4	STR	13'-4"	107
B9	4	#6	STR	13'-4"	80
D1	10	#6	STR	1'-6"	23
H1	3	#4	2	13'-3"	27
H2	3	#4	2	12'-11"	26
K1	6	#4	STR	3'-6"	14
S1	44	#4	4	7'-11"	233
S2	44	#4	5	3'-2"	93
S3	10	#4	6	7'-7"	50
S4	2	#4	4	8'-4"	11
S5	2	#4	5	3'-7"	5
V1	34	#4	STR	5'-2"	117

REINFORCING STEEL (FOR END BENT #1, STAGE I) 1612 LBS.

CLASS A CONCRETE BREAKDOWN (FOR END BENT #1, STAGE I)

POUR #1	CAP, LOWER PART OF WINGS	9.6 C.Y.
POUR #2	UPPER PART OF WINGS	1.6 C.Y.
TOTAL CLASS A CONCRETE (STAGE I)		11.2 C.Y.

STAGE II

BAR	NO.	SIZE	TYPE	LENGTH	WEIGHT
B3	9	#4	STR	2'-5"	15
B4	8	#9	1	23'-4"	635
B5	8	#4	STR	22'-1"	118
B6	12	#4	STR	14'-7"	117
B7	4	#6	STR	14'-7"	88
D1	10	#6	STR	1'-6"	23
H3	6	#4	3	13'-3"	53
K1	6	#4	STR	3'-6"	14
S1	45	#4	4	7'-11"	238
S2	45	#4	5	3'-2"	95
S3	10	#4	6	7'-7"	50
S4	3	#4	4	8'-4"	17
S5	3	#4	5	3'-7"	7
V1	35	#4	STR	5'-2"	121

REINFORCING STEEL (FOR END BENT #1, STAGE II) 1591 LBS.

CLASS A CONCRETE BREAKDOWN (FOR END BENT #1, STAGE II)

POUR #1	CAP, LOWER PART OF WINGS	9.9 C.Y.
POUR #2	UPPER PART OF WINGS	1.7 C.Y.
TOTAL CLASS A CONCRETE (STAGE II)		11.6 C.Y.

END BENT #1

CLASS A CONCRETE:	22.8 C.Y.
REINFORCING STEEL:	3,203 LBS.

HP14x73 GALVANIZED STEEL PILES
NO: 10 LIN. FT. = 200

PILE EXCAVATION

IN SOIL:	75 L.F.
NOT IN SOIL:	90 L.F.

NOTE: CONCRETE AND REINFORCING STEEL QUANTITIES IN PRECAST PANELS ARE NOT INCLUDED HERE. SEE WALL PLANS.

DocuSigned by: Hardy Willis
CC28FCFF022346...
NORTH CAROLINA PROFESSIONAL SEAL 20 ENGINEER HARDY L. WILLIS
10/30/2015

PROJECT NO. 17BP.14.R.135
TRANSYLVANIA COUNTY
STATION: 12+87.25 -L-

SHEET 6 OF 6

V&M Vaughn & Melton Consulting Engineers
Asheville, North Carolina 828-253-2796
Charlotte, North Carolina 704-357-0488
Tri-Cities, Tennessee 423-467-8401
Knoxville, Tennessee 865-546-5800
Middlesboro, Kentucky 606-248-6600
Spartanburg, South Carolina 864-574-4775
Copyright © 2006 Vaughn & Melton, Inc. All Rights Reserved

STATE OF NORTH CAROLINA
DEPARTMENT OF TRANSPORTATION
RALEIGH

SUBSTRUCTURE

END BENT No. 1 DETAILS

DWN. BY: AW	DATE: 8/2014	
CHKD. BY: HLW	DATE: 8/2014	
DES. EGR. OF RECORD: TSA	DATE: 8/2014	

REVISIONS

NO.	BY:	DATE:	NO.	BY:	DATE:
1			3		
2			4		

SHEET NO. S-17
TOTAL SHEETS 46

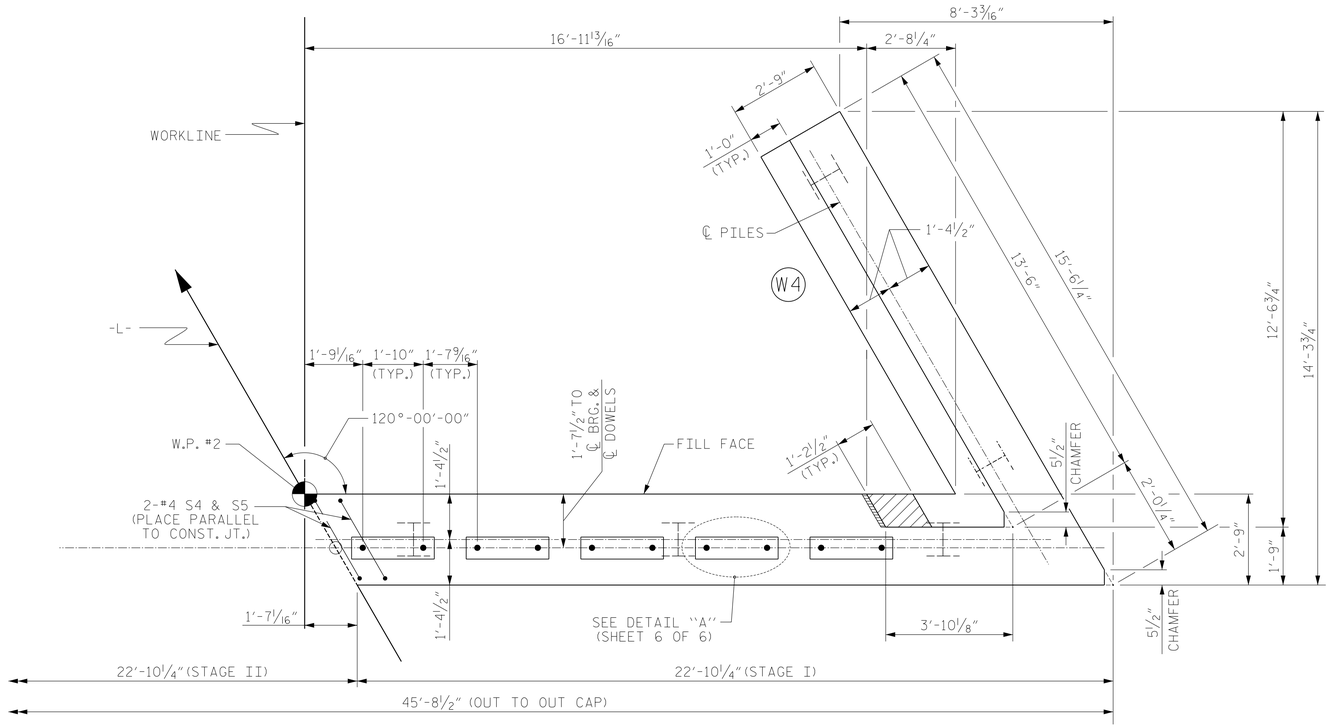

PARTIAL PLAN

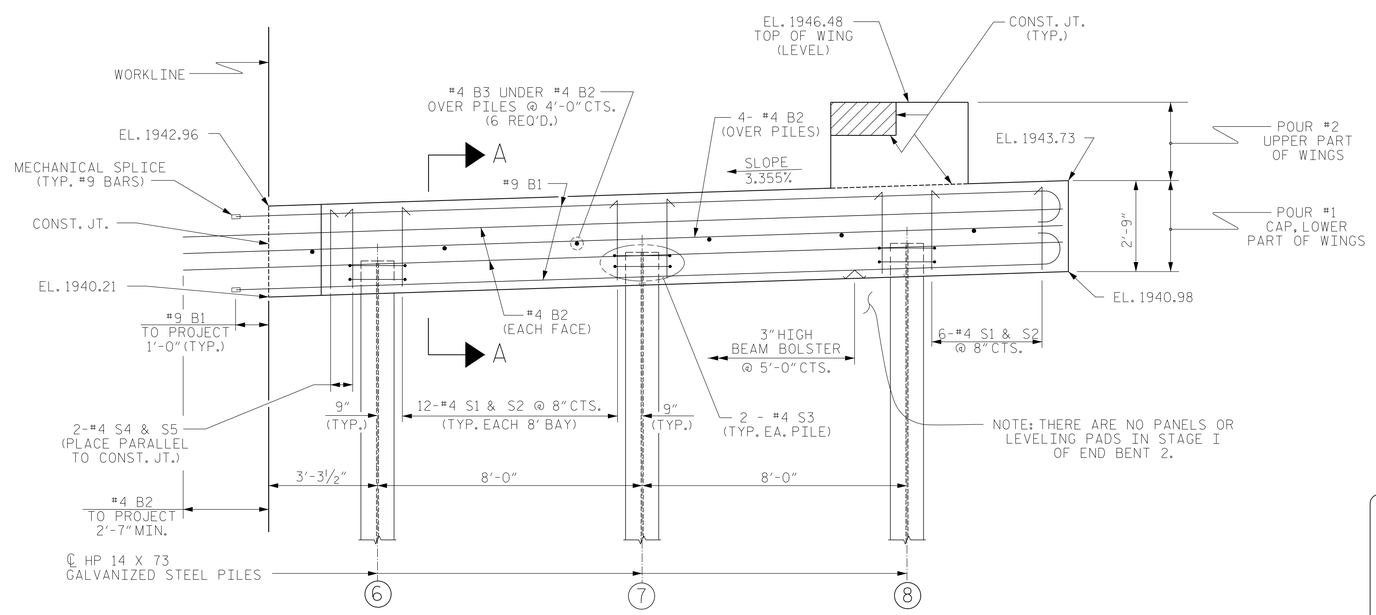

PARTIAL ELEVATION

WINGS NOT SHOWN FOR CLARITY.
FOR SECTION A-A, SEE SHEET 6 OF 6.

NOTES

STIRRUPS IN CAP MAY BE SHIFTED AS NECESSARY TO CLEAR DOWELS.

THE CONCRETE IN THE SHADED AREA OF THE WING SHALL BE POURED AFTER THE VERTICAL CONCRETE BARRIER RAIL IS CAST IF SLIP FORMING IS USED.

FOR PILE SPLICE DETAILS, SEE SHEET 6 OF 6.

FOR WING DETAILS, SEE SHEET 4 & 5 OF 6.

VERIFY PANEL HEIGHT IN FIELD AFTER 2'-0" CONCRETE LEVELING PAD IS POURED.

GALVANIZE THE FULL LENGTH OF EACH END BENT PILE IN ACCORDANCE WITH SECTION 1076 OF THE STANDARD SPECIFICATIONS.

NORTH CAROLINA PROFESSIONAL SEAL ENGINEER 20117 HARDY L. WILLIS
DocuSigned by: Hardy Willis
CC2876FCF023461...
10/30/2015

PROJECT NO. 17BP.14.R.135
TRANSYLVANIA COUNTY
STATION: 12+87.25 -L-

SHEET 1 OF 6

STATE OF NORTH CAROLINA
DEPARTMENT OF TRANSPORTATION
RALEIGH

SUBSTRUCTURE

END BENT No. 2
STAGE I

V&M
Vaughn & Melton
Consulting Engineers
Asheville, North Carolina 828-253-2796
Charlotte, North Carolina 704-357-0488
Tri-Cities, Tennessee 423-467-8401
Knoxville, Tennessee 865-546-5800
Middlesboro, Kentucky 606-248-6600
Spartanburg, South Carolina 864-574-4775
Copyright © 2006 Vaughn & Melton, Inc. All Rights Reserved

DWN. BY: AW DATE: 8/2014
CHKD. BY: HLW DATE: 8/2014
DES. EGR. OF RECORD: TSA DATE: 8/2014

REVISIONS						
NO.	BY:	DATE:	NO.	BY:	DATE:	
1			3			
2			4			

SHEET NO. S-18
TOTAL SHEETS 46

SEE SHEET 1 OF 6 FOR NOTES.

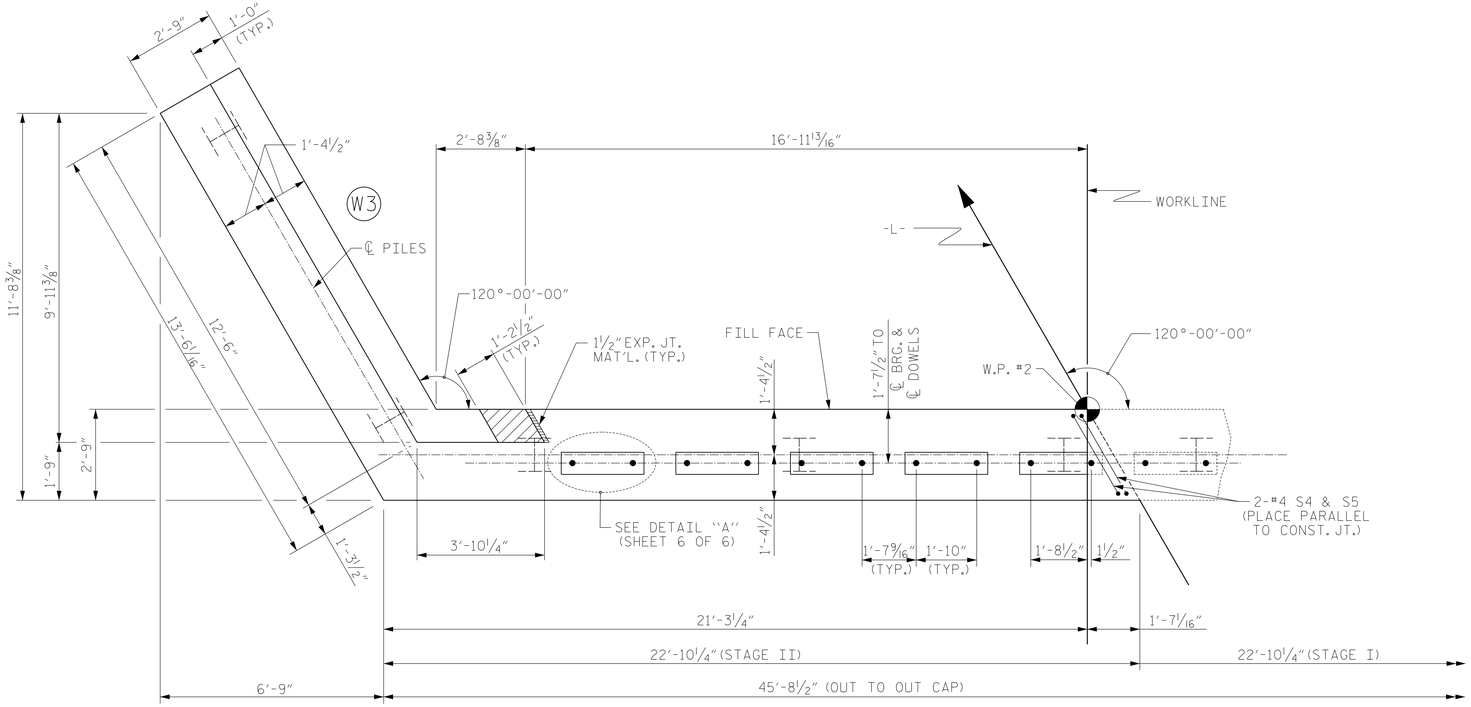

PARTIAL PLAN

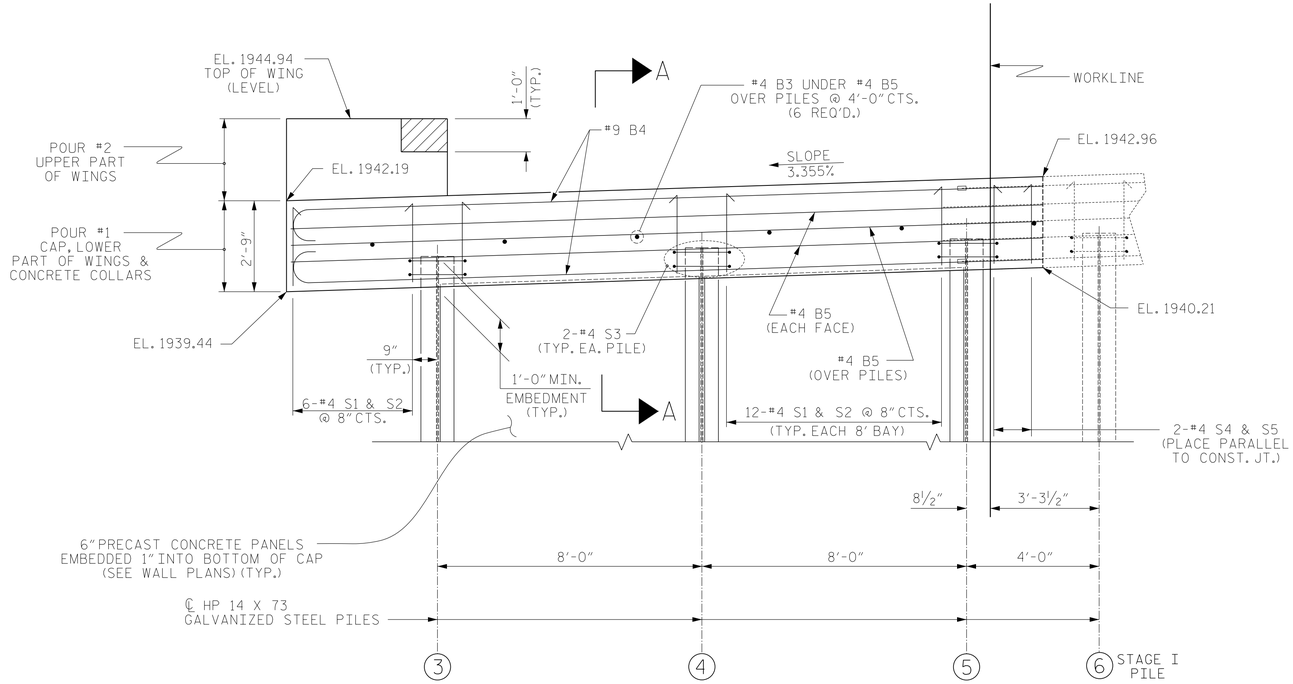

PARTIAL ELEVATION

WINGS NOT SHOWN FOR CLARITY.
FOR SECTION A-A, SEE SHEET 6 OF 6.
SEE RETAINING WALL PLANS FOR FURTHER INFORMATION ON PILES AND PANELS.

NORTH CAROLINA PROFESSIONAL SEAL ENGINEER
DocuSigned by: Hardy Willis
CC287FCF0223461...
10/30/2015

PROJECT NO. 17BP.14.R.135
TRANSYLVANIA COUNTY
STATION: 12+87.25 -L-

SHEET 2 OF 6

STATE OF NORTH CAROLINA
DEPARTMENT OF TRANSPORTATION
RALEIGH

SUBSTRUCTURE

END BENT No. 2
STAGE II

V&M Vaughn & Melton Consulting Engineers
Asheville, North Carolina 828-253-2796
Charlotte, North Carolina 704-357-0488
Tri-Cities, Tennessee 423-467-8401
Knoxville, Tennessee 865-546-5800
Middlesboro, Kentucky 606-248-6600
Spartanburg, South Carolina 864-574-4775
Copyright © 2006 Vaughn & Melton, Inc. All Rights Reserved

DWN. BY: AW DATE: 8/2014
CHKD. BY: HLW DATE: 8/2014
DES. EGR. OF RECORD: TSA DATE: 8/2014

REVISIONS								SHEET NO.
NO.	BY:	DATE:	NO.	BY:	DATE:			S-19
1			3					TOTAL SHEETS
2			4					46

NOTE: NUMBER ON CIRCLE DENOTES PILE NUMBER.

SEE RETAINING WALL PLANS FOR PRECAST PANEL DETAILS, AND ADDITIONAL PILE INSTALLATION DETAILS.

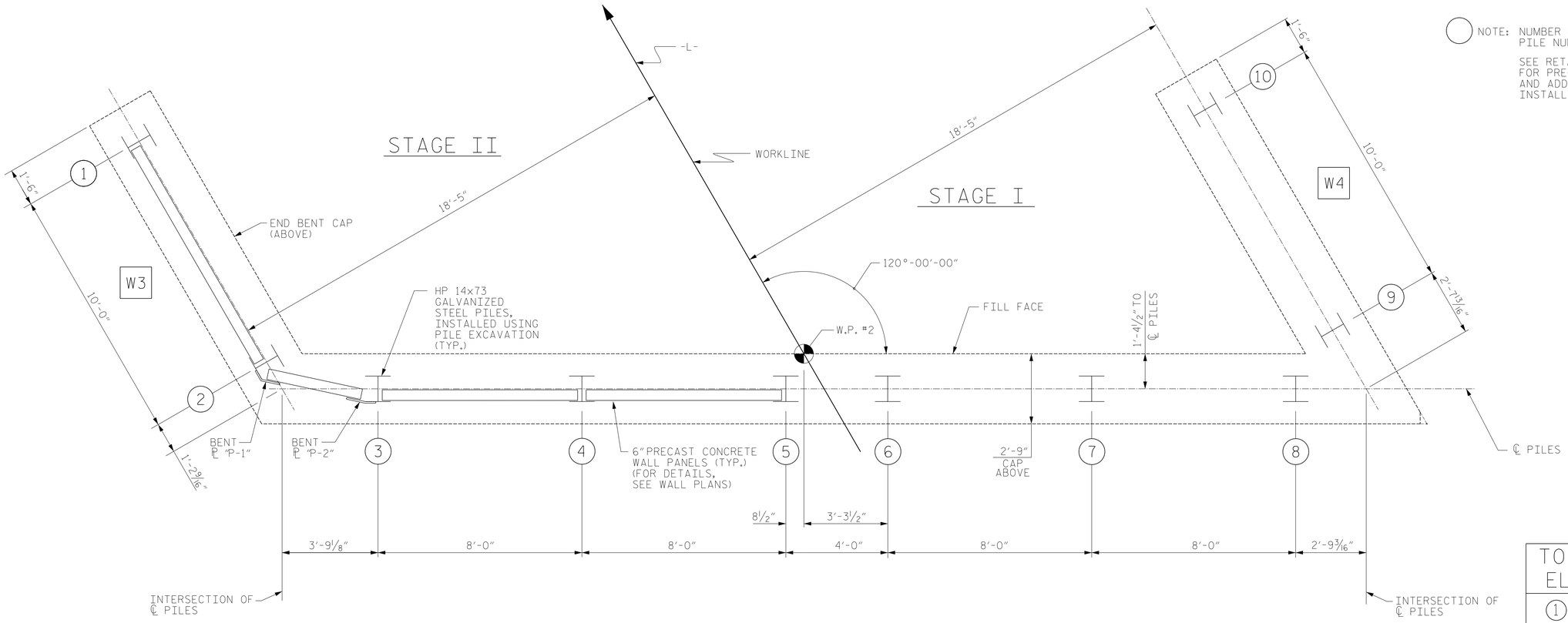

PLAN

TOP OF PILE ELEVATIONS	
1	1940.44
2	1940.44
3	1940.59
4	1940.86
5	1941.13
6	1941.26
7	1941.53
8	1941.80
9	1941.98
10	1941.98

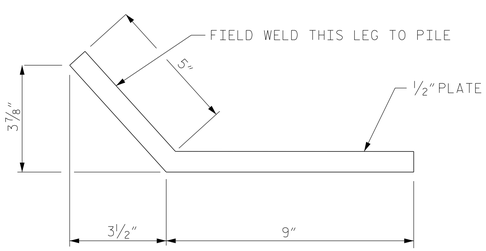

BENT PLATE "P-1"

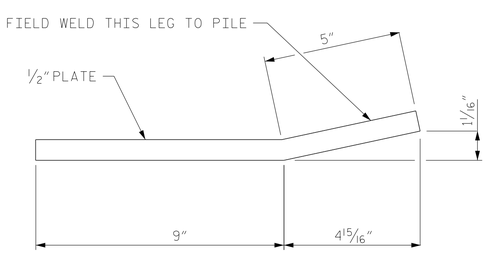

BENT PLATE "P-2"

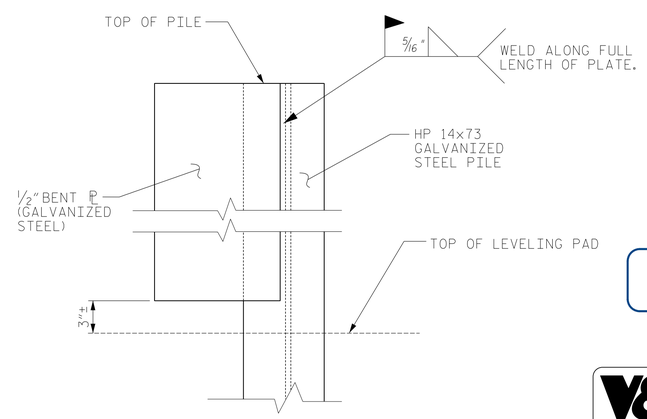

TYPICAL WELDING DETAIL FOR BENT PLATES

PROJECT NO. 17BP.14.R.135

TRANSYLVANIA COUNTY

STATION: 12+87.25 -L-

SHEET 3 OF 6

NORTH CAROLINA PROFESSIONAL SEAL 20777 ENGINEER HARDY L. WILLIS

DocuSigned by: Hardy Willis CC287FCF0823461...

10/30/2015

V&M Vaughn & Melton Consulting Engineers

Asheville, North Carolina 828-253-2796

Charlotte, North Carolina 704-357-0488

Tri-Cities, Tennessee 423-467-8401

Knoxville, Tennessee 865-546-5800

Middlesboro, Kentucky 606-248-6600

Spartanburg, South Carolina 864-574-4775

Copyright © 2006 Vaughn & Melton, Inc. All Rights Reserved

STATE OF NORTH CAROLINA
DEPARTMENT OF TRANSPORTATION
RALEIGH

SUBSTRUCTURE

END BENT NO. 2
PILE LAYOUT

DWN. BY: DPP	DATE: 8/2014	
CHKD. BY: HLW	DATE: 8/2014	
DES. EGR. OF RECORD: TSA	DATE: 8/2014	

REVISIONS						SHEET NO.
NO.	BY:	DATE:	NO.	BY:	DATE:	S-20
1			3			TOTAL SHEETS
2			4			46

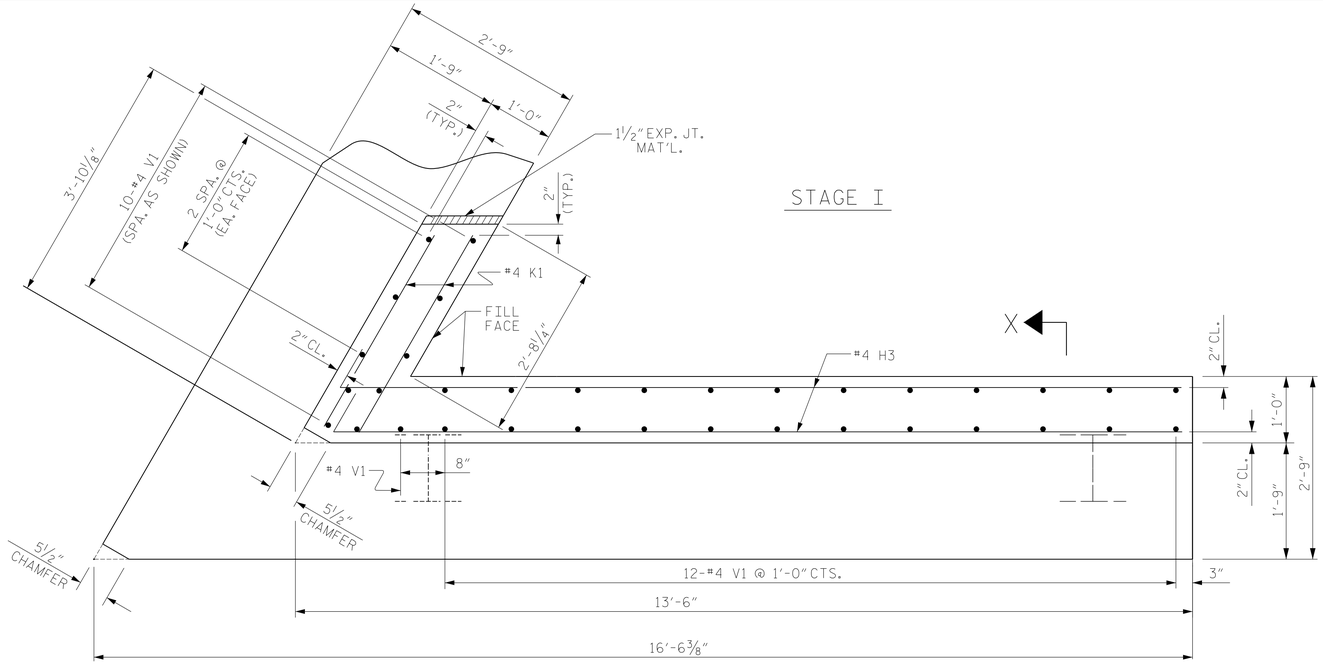

PLAN OF WING (W4)

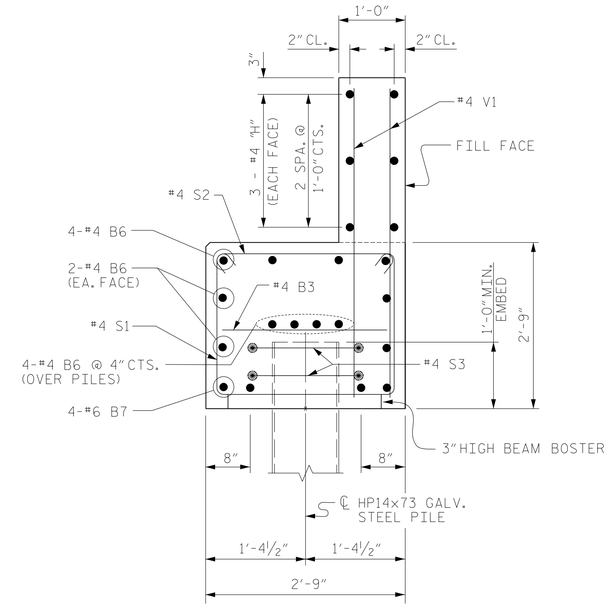

SECTION X-X

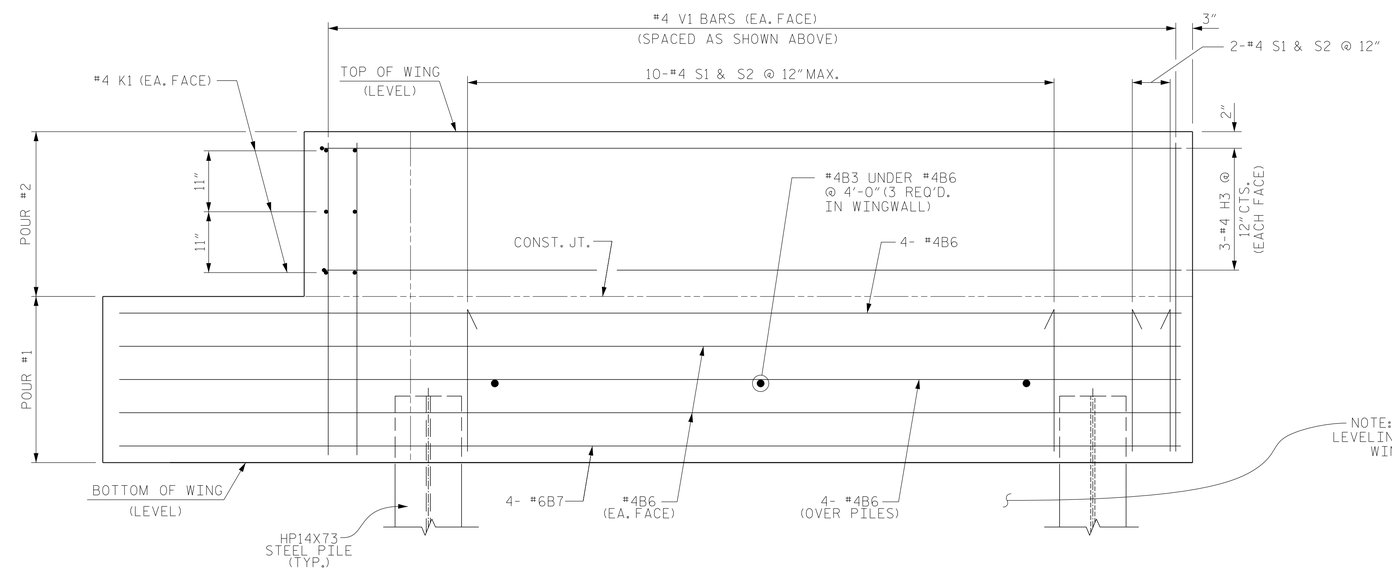

NOTE: THERE ARE NO PANELS OR LEVELING PADS BELOW THE STAGE I WINGWALL ON END BENT 2.

ELEVATION OF WING (W4)

WING DETAILS

DocuSigned by: Hardy Willis
CC287FCF022461...
10/30/2015

PROJECT NO. 17BP.14.R.135

TRANSYLVANIA COUNTY

STATION: 12+87.25 -L-

SHEET 4 OF 6

Vaughn & Melton
Consulting Engineers

Asheville, North Carolina 828-253-2796
Charlotte, North Carolina 704-357-0488
Tri-Cities, Tennessee 423-467-8401
Knoxville, Tennessee 865-546-5800
Middlesboro, Kentucky 606-248-6600
Spartanburg, South Carolina 864-574-4775

Copyright © 2006 Vaughn & Melton, Inc. All Rights Reserved

STATE OF NORTH CAROLINA
DEPARTMENT OF TRANSPORTATION
RALEIGH

SUBSTRUCTURE
END BENT NO. 2
WING W4 DETAILS
STAGE I

DWN. BY: AW	DATE: 8/2014		
CHKD. BY: HLW	DATE: 8/2014		
DES. EGR. OF RECORD: TSA	DATE: 8/2014		

REVISIONS

NO.	BY:	DATE:	NO.	BY:	DATE:
1			3		
2			4		

SHEET NO. S-21

TOTAL SHEETS 46

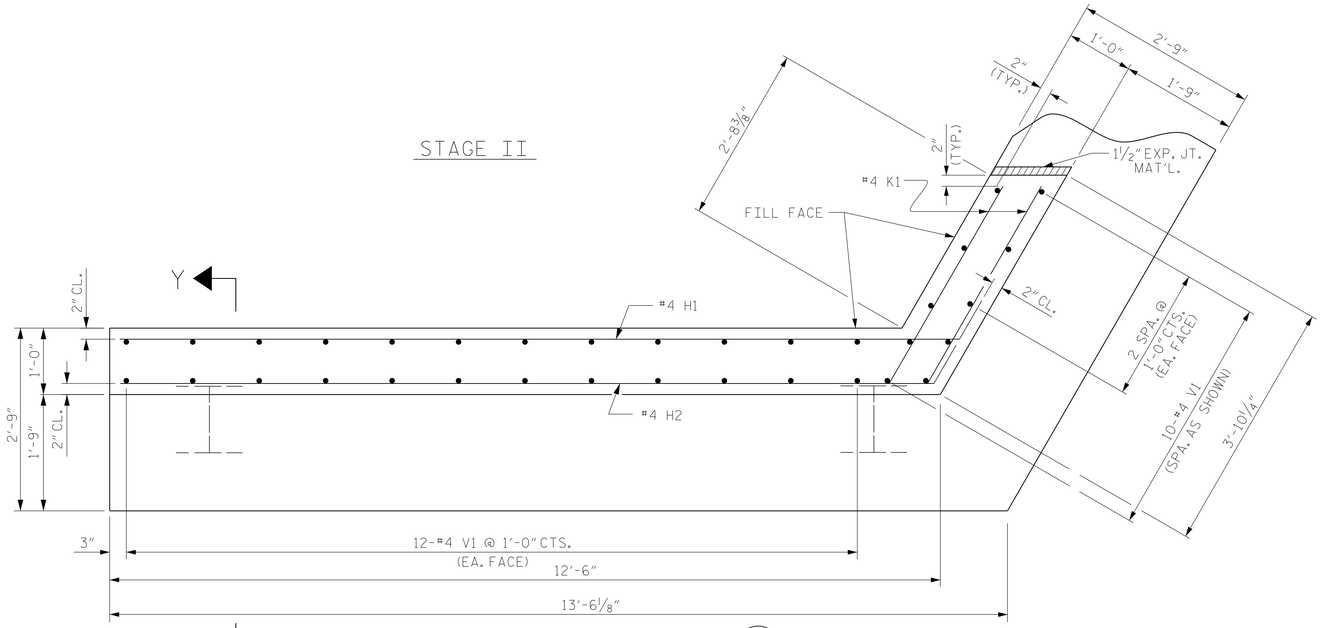

PLAN OF WING (W3)

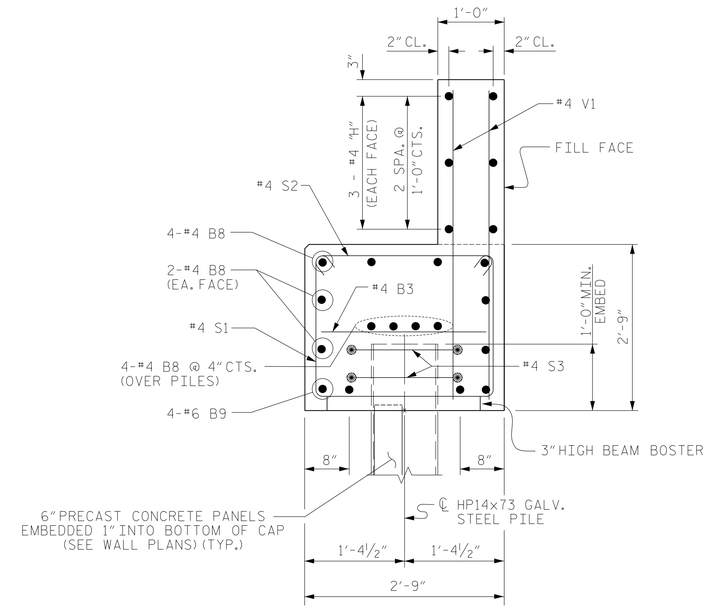

SECTION Y-Y

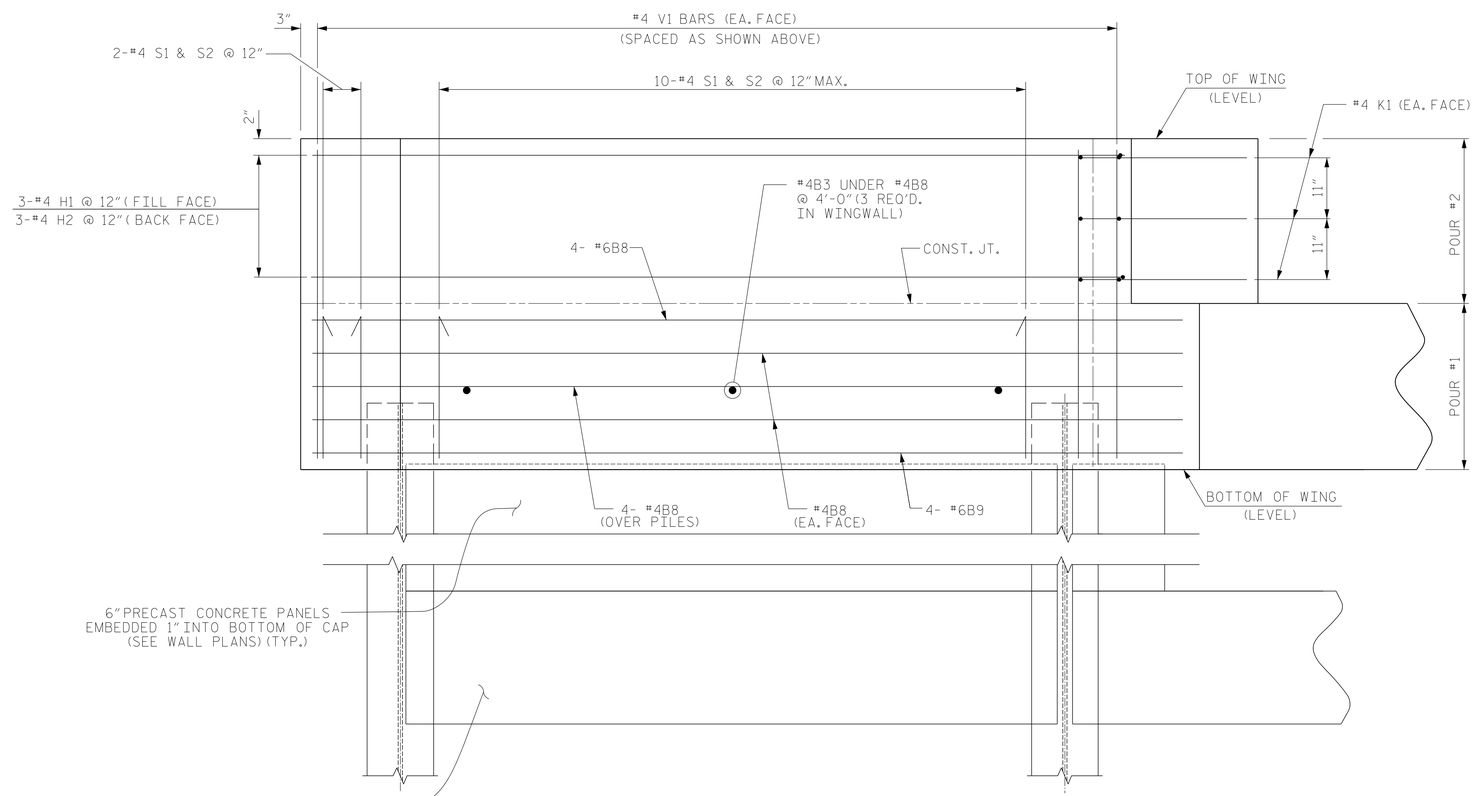

ELEVATION OF WING (W3)

WING DETAILS

DocuSigned by:
Hardy Willis
CC287FCF0223BB...
10/30/2015

NORTH CAROLINA PROFESSIONAL SEAL 20774 ENGINEER HARDY L. WILLIS

PROJECT NO. 17BP.14.R.135

TRANSYLVANIA COUNTY

STATION: 12+87.25 -L-

SHEET 5 OF 6

STATE OF NORTH CAROLINA
DEPARTMENT OF TRANSPORTATION
RALEIGH

SUBSTRUCTURE
END BENT NO. 2
WING W3 DETAILS
STAGE II

V&M
Vaughn & Melton
Consulting Engineers
Asheville, North Carolina 828-253-2796
Charlotte, North Carolina 704-357-0488
Tri-Cities, Tennessee 423-467-8401
Knoxville, Tennessee 865-546-5800
Middlesboro, Kentucky 606-248-6600
Spartanburg, South Carolina 864-574-4775

Copyright © 2006 Vaughn & Melton, Inc. All Rights Reserved

DWN. BY: AW	DATE: 8/2014	
CHKD. BY: HLW	DATE: 8/2014	
DES. EGR. OF RECORD: TSA	DATE: 8/2014	

REVISIONS						SHEET NO.
NO.	BY:	DATE:	NO.	BY:	DATE:	S-22
1			3			TOTAL SHEETS
2			4			46

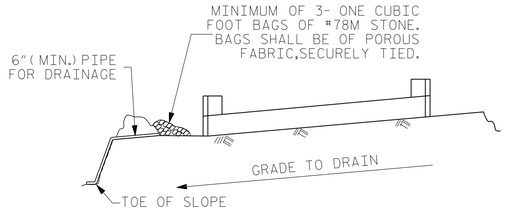

BAGGED STONE AND PIPE SHALL BE PLACED IMMEDIATELY AFTER COMPLETION OF END BENT EXCAVATION. PIPE MAY BE EITHER CONCRETE, CORRUGATED STEEL, CORRUGATED ALUMINUM ALLOY, OR CORRUGATED PLASTIC. PERFORATED PIPE WILL NOT BE ALLOWED.

BAGGED STONE SHALL REMAIN IN PLACE UNTIL THE ENGINEER DIRECTS THAT IT BE REMOVED. THE CONTRACTOR SHALL REMOVE AND DISPOSE OF SILT ACCUMULATIONS AT BAGGED STONE WHEN SO DIRECTED BY THE ENGINEER. BAGS SHALL BE REMOVED AND REPLACED WHENEVER THE ENGINEER DETERMINES THAT THEY HAVE DETERIORATED AND LOST THEIR EFFECTIVENESS.

NO SEPARATE PAYMENT WILL BE MADE FOR THIS WORK AND THE ENTIRE COST OF THIS WORK SHALL BE INCLUDED IN THE UNIT CONTRACT PRICE BID FOR THE SEVERAL PAY ITEMS.

TEMPORARY DRAINAGE AT END BENT

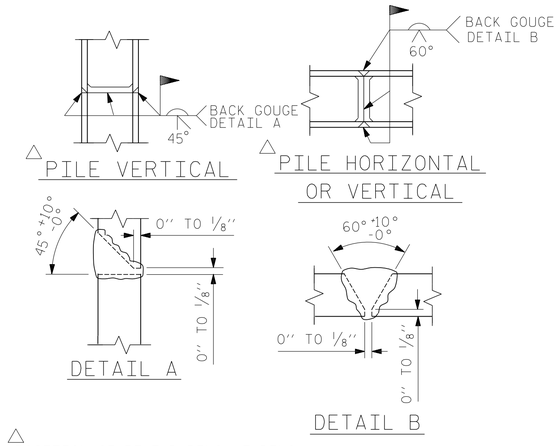

△ POSITION OF PILE DURING WELDING.

PILE SPLICE DETAILS

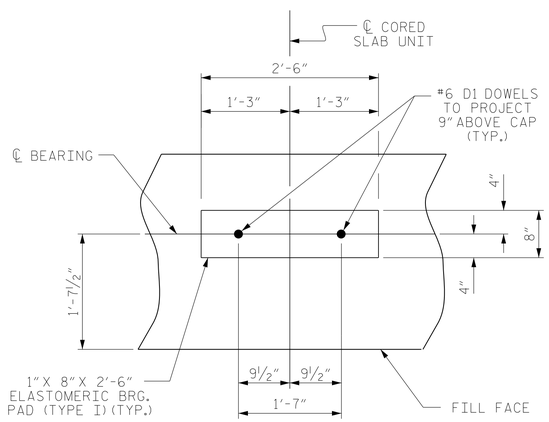

DETAIL "A"

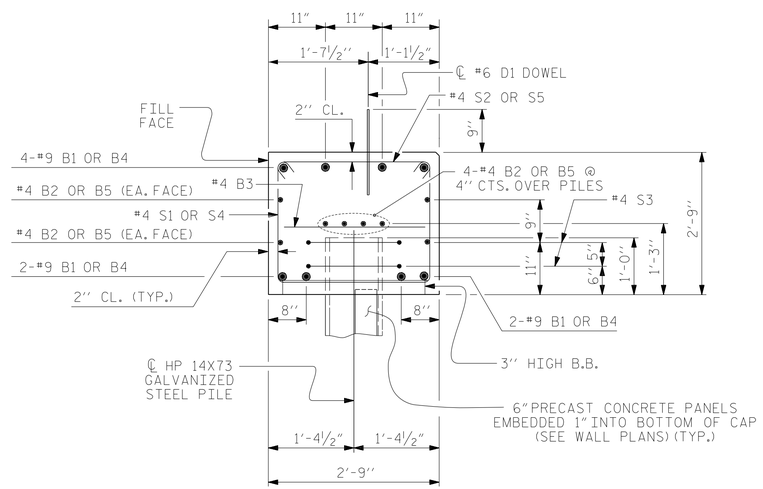

SECTION A-A

BAR TYPES

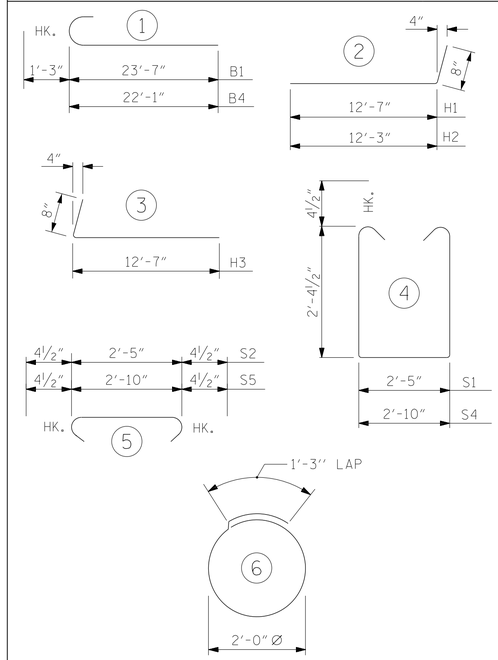

ALL BAR DIMENSIONS ARE OUT TO OUT.

BILL OF MATERIAL FOR END BENT #2

STAGE I

BAR	NO.	SIZE	TYPE	LENGTH	WEIGHT
B1	8	#9	1	24'-10"	676
B2	8	#4	STR	25'-3"	135
B3	9	#4	STR	2'-5"	15
B6	12	#4	STR	14'-7"	117
B7	4	#6	STR	14'-7"	88
D1	10	#6	STR	1'-6"	23
H3	6	#4	3	13'-3"	53
K1	6	#4	STR	3'-6"	14
S1	44	#4	4	7'-11"	238
S2	44	#4	5	3'-2"	93
S3	10	#4	6	7'-7"	50
S4	2	#4	4	8'-4"	11
S5	2	#4	5	3'-7"	5
V1	35	#4	STR	5'-2"	121

REINFORCING STEEL (FOR END BENT #2, STAGE I) 1639 LBS.

CLASS A CONCRETE BREAKDOWN (FOR END BENT #2, STAGE I)

POUR #1 CAP, LOWER PART OF WINGS 9.9 C.Y.

POUR #2 UPPER PART OF WINGS 1.7 C.Y.

TOTAL CLASS A CONCRETE (STAGE I) 11.6 C.Y.

STAGE II

BAR	NO.	SIZE	TYPE	LENGTH	WEIGHT
B3	12	#4	STR	2'-5"	19
B4	8	#9	1	22'-10"	621
B5	8	#4	STR	25'-3"	135
B8	12	#4	STR	13'-4"	107
B9	4	#6	STR	13'-4"	80
D1	10	#6	STR	1'-6"	23
H1	3	#4	2	13'-3"	27
H2	3	#4	2	12'-11"	26
K1	6	#4	STR	3'-6"	14
S1	44	#4	4	7'-11"	233
S2	44	#4	5	3'-2"	93
S3	10	#4	6	7'-7"	50
S4	2	#4	4	8'-4"	11
S5	2	#4	5	3'-7"	5
V1	34	#4	STR	5'-2"	117

REINFORCING STEEL (FOR END BENT #2, STAGE II) 1561 LBS.

CLASS A CONCRETE BREAKDOWN (FOR END BENT #2, STAGE II)

POUR #1 CAP, LOWER PART OF WINGS 9.6 C.Y.

POUR #2 UPPER PART OF WINGS 1.6 C.Y.

TOTAL CLASS A CONCRETE (STAGE II) 11.2 C.Y.

END BENT #2

CLASS A CONCRETE:	22.8 C.Y.
REINFORCING STEEL:	3,200 LBS.

HP14x73 GALVANIZED STEEL PILES
NO: 10 LIN. FT. = 150

PILE EXCAVATION

IN SOIL:	30 L.F.
NOT IN SOIL:	110 L.F.

NOTE: CONCRETE AND REINFORCING STEEL QUANTITIES IN PRECAST PANELS ARE NOT INCLUDED HERE. SEE WALL PLANS.

NORTH CAROLINA PROFESSIONAL SEAL 20773 ENGINEER HARDY WILLIS HARDY WILLIS

DocuSigned by: Hardy Willis CC287FCF0B23461...
10/30/2015

PROJECT NO. 17BP.14.R.135
TRANSYLVANIA COUNTY
STATION: 12+87.25 -L-

SHEET 6 OF 6

V&M Vaughn & Melton Consulting Engineers
Asheville, North Carolina 828-253-2796
Charlotte, North Carolina 704-357-0488
Tri-Cities, Tennessee 423-467-8401
Knoxville, Tennessee 865-546-5800
Middlesboro, Kentucky 606-248-6600
Spartanburg, South Carolina 864-574-4775

Copyright © 2006 Vaughn & Melton, Inc. All Rights Reserved

STATE OF NORTH CAROLINA
DEPARTMENT OF TRANSPORTATION
RALEIGH

SUBSTRUCTURE

END BENT No. 2 DETAILS

DWN. BY: AW	DATE: 8/2014	
CHKD. BY: HLW	DATE: 8/2014	
DES. EGR. OF RECORD: TSA	DATE: 8/2014	

REVISIONS						
NO.	BY:	DATE:	NO.	BY:	DATE:	
1			3			
2			4			

SHEET NO. S-23
TOTAL SHEETS 46

NOTES :

PLACE RIP RAP ALONG STREAM BANKS AS SHOWN.

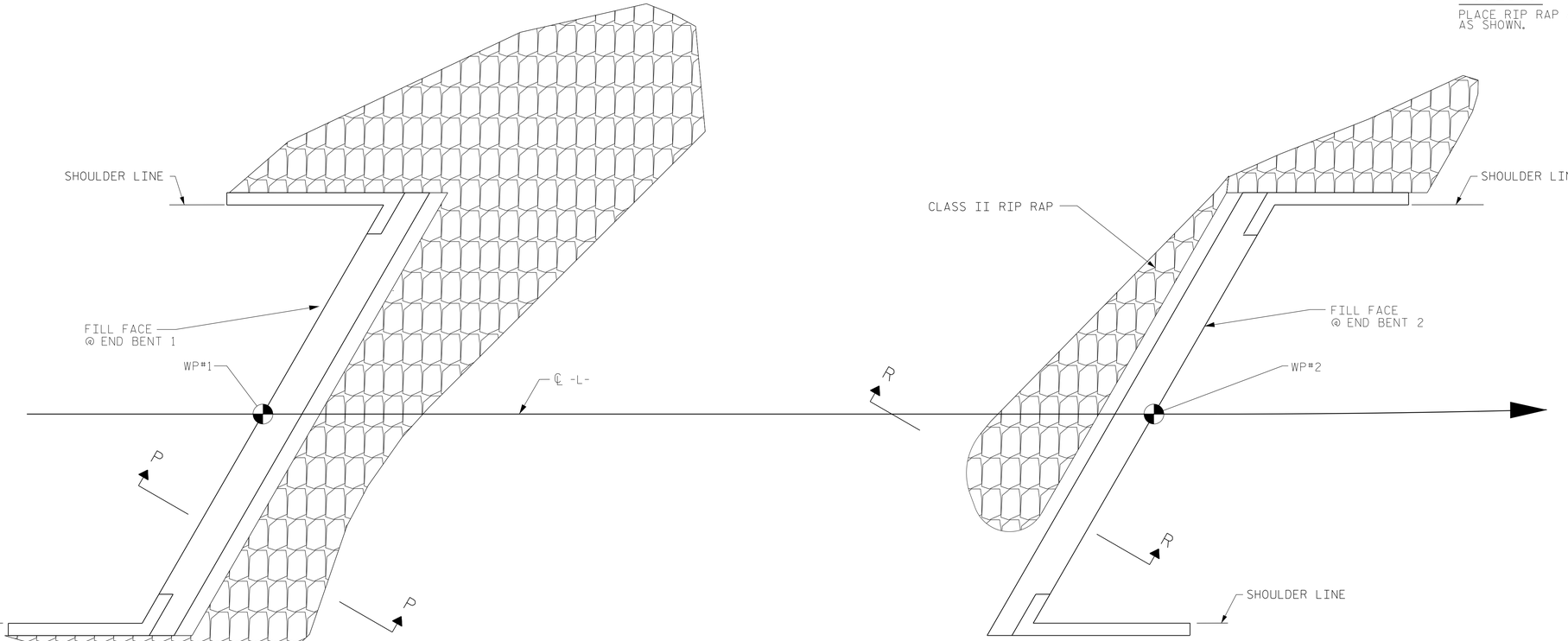

ESTIMATED QUANTITIES		
	RIP RAP CLASS II (2'-0" THICK)	GEOTEXTILE FOR DRAINAGE
	TONS	SQUARE YARDS
END BENT 1	92	104
END BENT 2	39	44

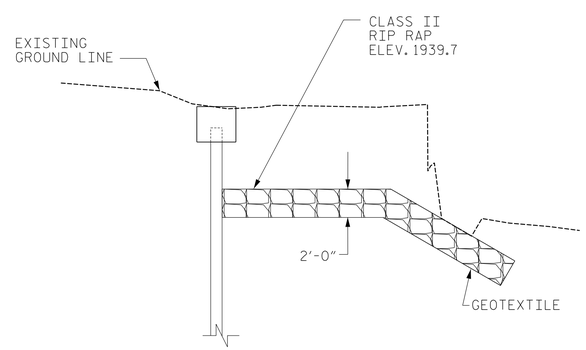

SECTION P-P

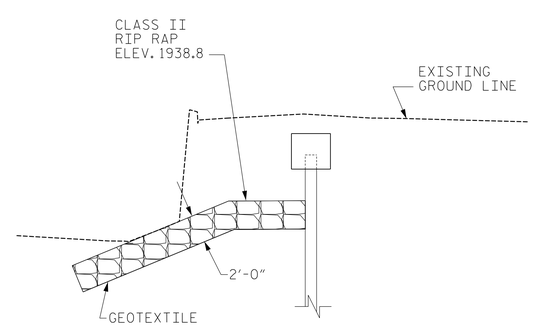

SECTION R-R

NORTH CAROLINA PROFESSIONAL SEAL ENGINEER HARDY WILLIS WILLIS 029461

DocuSigned by: Hardy Willis CC287FCF0223461...

10/30/2015

PROJECT NO. 17BP.14.R.135

TRANSYLVANIA COUNTY

STATION: 12+87.25 -L-

STATE OF NORTH CAROLINA
DEPARTMENT OF TRANSPORTATION
RALEIGH

STANDARD

RIP RAP DETAILS

Vaughn & Melton Consulting Engineers

Asheville, North Carolina 828-253-2796
Charlotte, North Carolina 704-357-0488
Tri-Cities, Tennessee 423-467-8401
Knoxville, Tennessee 865-546-5800
Middlesboro, Kentucky 606-248-6600
Spartanburg, South Carolina 864-574-4775

Copyright © 2006 Vaughn & Melton, Inc. All Rights Reserved

ASSEMBLED BY : AW	DATE : 8/2014	DWN. BY: AW	DATE: 7/2014
CHECKED BY : HLW	DATE : 8/2014	CHKD. BY: HLW	DATE: 7/2014
DRAWN BY : REK 1/84	REV. 5/1/06R TLA/GM	DES. EGR. OF RECORD: TSA	DATE: 7/2014
CHECKED BY : RDU 1/84	REV. 10/1/11 MAA/GM REV. 12/21/11 MAA/GM		

REVISIONS						
NO.	BY:	DATE:	NO.	BY:	DATE:	
1			3			
2			4			

SHEET NO. S-24

TOTAL SHEETS 46

STD. NO. RR1 (Sht 1)

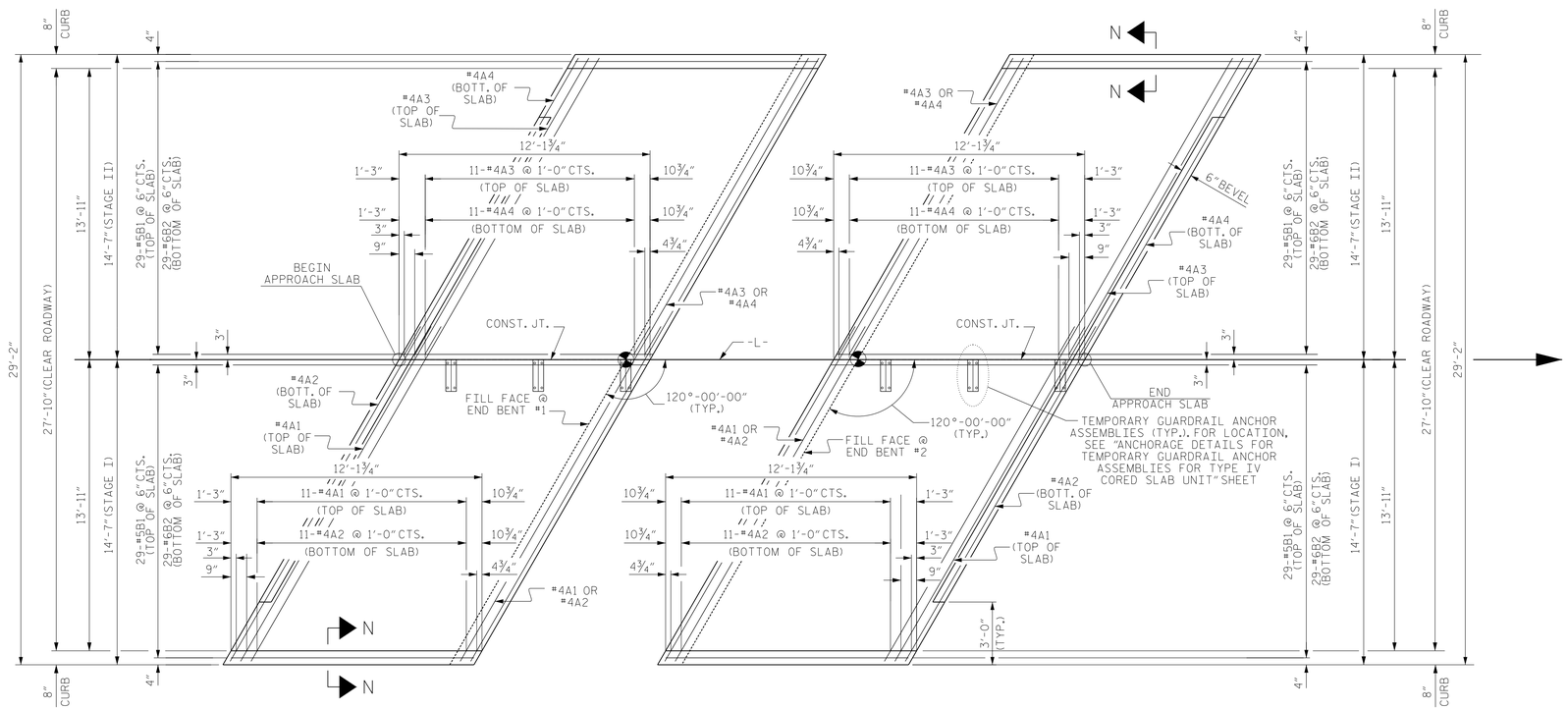

PLAN @ END BENT #1 PLAN @ END BENT #2

DIMENSIONS SHOWN ARE TYPICAL FOR BOTH APPROACH SLABS

BILL OF MATERIAL

APPROACH SLAB AT EB #1 STAGE I

BAR	NO.	SIZE	TYPE	LENGTH	WEIGHT
* A1	13	#4	STR	19'-2"	166
A2	13	#4	STR	18'-11"	164
* B1	29	#5	STR	11'-1"	335
B2	29	#6	STR	11'-7"	505
REINFORCING STEEL				LBS.	669
* EPOXY COATED REINFORCING STEEL				LBS.	501
CLASS AA CONCRETE				C.Y.	9.3

APPROACH SLAB AT EB #2 STAGE I

BAR	NO.	SIZE	TYPE	LENGTH	WEIGHT
* A1	13	#4	STR	19'-2"	166
A2	13	#4	STR	16'-6"	164
* B1	29	#5	STR	11'-1"	335
B2	29	#6	STR	11'-7"	505
REINFORCING STEEL				LBS.	669
* EPOXY COATED REINFORCING STEEL				LBS.	501
CLASS AA CONCRETE				C.Y.	9.3

APPROACH SLAB AT EB #1 STAGE II

BAR	NO.	SIZE	TYPE	LENGTH	WEIGHT
* A3	13	#4	STR	16'-5"	143
A4	13	#4	STR	16'-5"	143
* B1	29	#5	STR	11'-1"	335
B2	29	#6	STR	11'-7"	505
REINFORCING STEEL				LBS.	648
* EPOXY COATED REINFORCING STEEL				LBS.	478
CLASS AA CONCRETE				C.Y.	9.3

APPROACH SLAB AT EB #2 STAGE II

BAR	NO.	SIZE	TYPE	LENGTH	WEIGHT
* A3	13	#4	STR	16'-5"	143
A4	13	#4	STR	16'-5"	143
* B1	29	#5	STR	11'-1"	335
B2	29	#6	STR	11'-7"	505
REINFORCING STEEL				LBS.	648
* EPOXY COATED REINFORCING STEEL				LBS.	478
CLASS AA CONCRETE				C.Y.	9.3

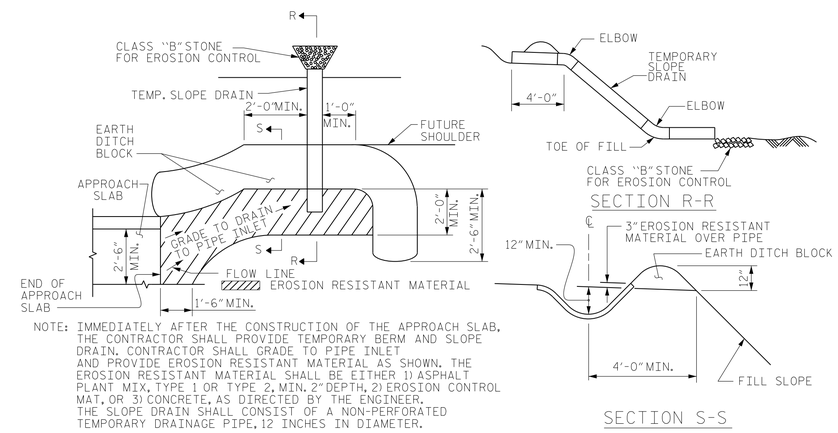

NOTE: IMMEDIATELY AFTER THE CONSTRUCTION OF THE APPROACH SLAB, THE CONTRACTOR SHALL PROVIDE TEMPORARY BERM AND SLOPE DRAIN. CONTRACTOR SHALL GRADE TO PIPE INLET AND PROVIDE EROSION RESISTANT MATERIAL AS SHOWN. THE EROSION RESISTANT MATERIAL SHALL BE EITHER 1) ASPHALT PLANT MIX, TYPE 1 OR TYPE 2, MIN. 2" DEPTH, 2) EROSION CONTROL MAT, OR 3) CONCRETE, AS DIRECTED BY THE ENGINEER. THE SLOPE DRAIN SHALL CONSIST OF A NON-PERFORATED TEMPORARY DRAINAGE PIPE, 12 INCHES IN DIAMETER.

PLAN VIEW SECTION R-R SECTION S-S

TEMPORARY BERM AND SLOPE DRAIN DETAILS

(TO BE USED WHEN SHOULDER BERM GUTTER IS REQUIRED)

SPLICE LENGTHS		
BAR SIZE	EPOXY COATED	UNCOATED
#4	2'-0"	1'-9"
#5	2'-6"	2'-2"
#6	3'-10"	2'-7"

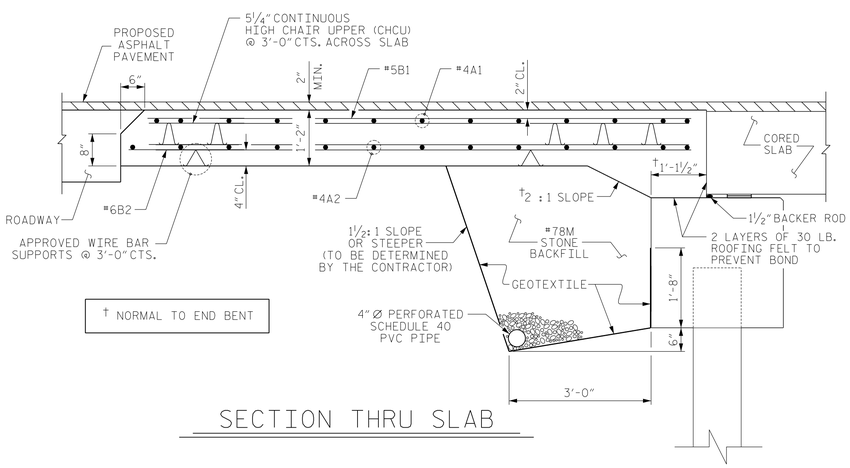

† NORMAL TO END BENT

SECTION THRU SLAB

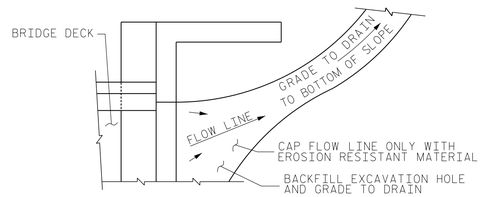

NOTE: IF THE APPROACH SLAB IS NOT CONSTRUCTED IMMEDIATELY AFTER THE BACKFILLING OF THE END BENT EXCAVATION, GRADE TO DRAIN TO THE BOTTOM OF THE SLOPE AND PROVIDE EROSION RESISTANT MATERIAL, SUCH AS FIBERGLASS ROVING OR AS DIRECTED BY THE ENGINEER TO PREVENT SOIL EROSION AND TO PROTECT THE AREA ADJACENT TO THE STRUCTURE. THE CONTRACTOR WILL BE REQUIRED TO REMOVE THESE MATERIALS PRIOR TO CONSTRUCTION OF THE APPROACH SLAB.

TEMPORARY DRAINAGE DETAIL

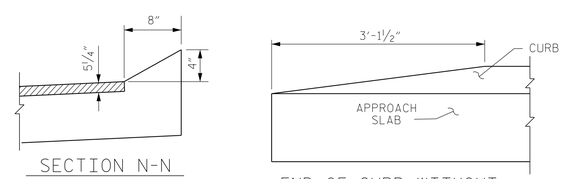

SECTION N-N END OF CURB WITHOUT SHOULDER BERM GUTTER

CURB DETAILS

PROJECT NO. 17BP.14.R.135

TRANSYLVANIA COUNTY

STATION: 12+87.25 -L-

STATE OF NORTH CAROLINA
DEPARTMENT OF TRANSPORTATION
RALEIGH

STANDARD
BRIDGE APPROACH SLAB
FOR PRESTRESSED CONCRETE
CORED SLAB UNIT
(SUB-REGIONAL TIER)
120° SKEW

REVISIONS						SHEET NO.
NO.	BY:	DATE:	NO.	BY:	DATE:	S-25
1			3			TOTAL SHEETS
2			4			46

10/30/2015

DocuSigned by: Hardy Willis
CC287FCF0223461...

ASSEMBLED BY :	JDS	DATE :	8/2014
CHECKED BY :	HLW	DATE :	8/2014
DRAWN BY : SHS/MAA	5-09	REV. 12-11	MAA/AAC
CHECKED BY : BCH	5-09		

STD. NO. BAS_30_120S

F. A. PROJECT NO. BRZ-1143(9)

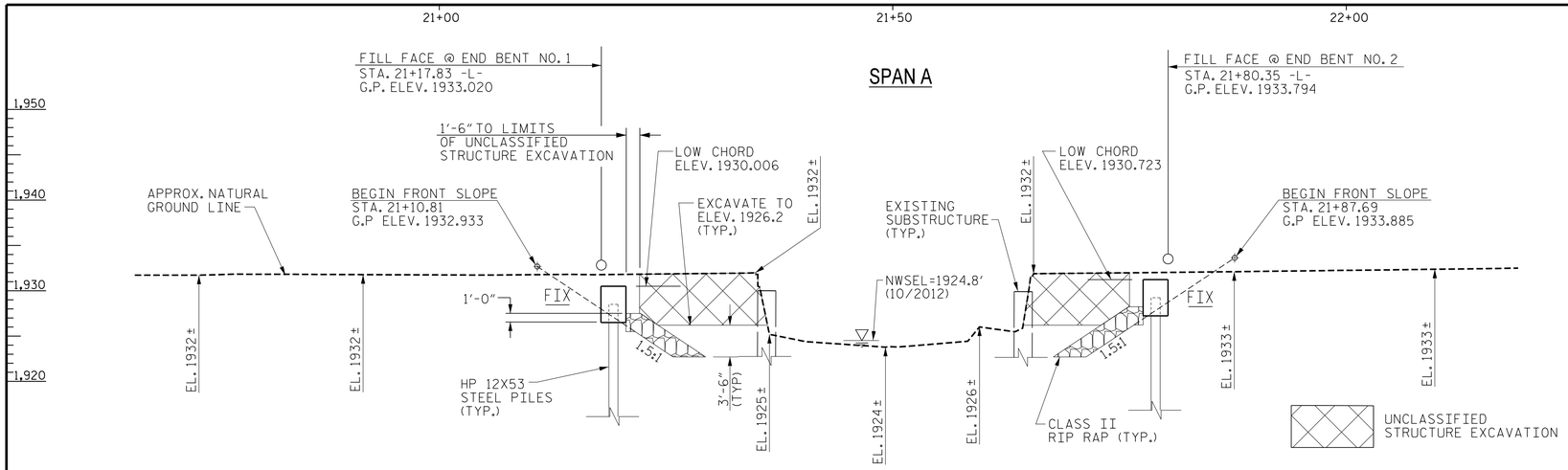

SECTION ALONG C/L SURVEY -L-

SECTIONS AT END BENTS ARE AT RIGHT ANGLES.

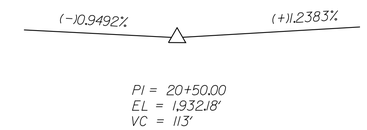

VERTICAL GRADE DATA -L-

PI Sta 22+00.97
△ = 88° 34' 36.4" (LT)
D = 29° 22' 56.8"
L = 301.46'
T = 190.22'
R = 195.00'

HORIZONTAL CURVE DATA -L-

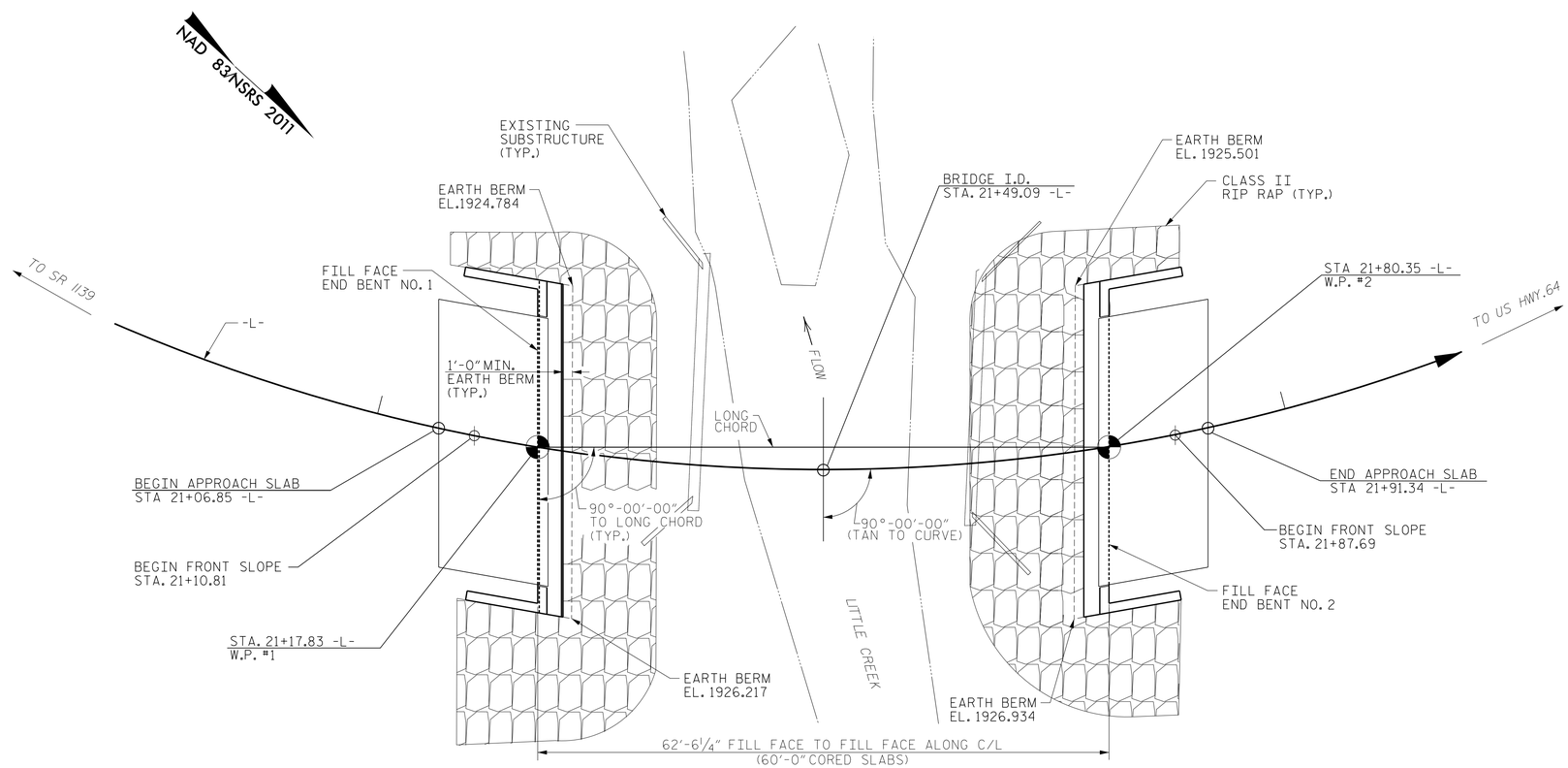

PLAN ALONG C/L SURVEY -L-

NOTES:
END BENTS ARE PARALLEL.
PILES NOT SHOWN IN PLAN VIEW FOR CLARITY.
CORED SLABS ARE PARALLEL TO LONG CHORD.

PROJECT NO. 17BP.14.R.136

TRANSYLVANIA COUNTY

STATION: 21+49.09 -L-

SHEET 1 OF 3 REPLACES BRIDGE NO. 205

DocuSigned by:
Hardy Willis
C0287FCF022346...
10/30/2015

STATE OF NORTH CAROLINA
DEPARTMENT OF TRANSPORTATION
RALEIGH

GENERAL DRAWING

BRIDGE over LITTLE CREEK
on SR 1143 between US HWY. 64
& SR 1139

Vaughn & Melton
Consulting Engineers
Asheville, North Carolina 828-253-2796
Charlotte, North Carolina 704-357-0488
Tri-Cities, Tennessee 423-467-8401
Knoxville, Tennessee 865-546-5800
Middlesboro, Kentucky 606-248-6600
Spartanburg, South Carolina 864-574-4775
Copyright © 2006 Vaughn & Melton, Inc. All Rights Reserved

DWN. BY: AW DATE: 01/2014
CHKD. BY: HLW DATE: 01/2014
DES. EGR. OF RECORD: CBC DATE: 01/2014

REVISIONS						
NO.	BY:	DATE:	NO.	BY:	DATE:	
1			3			
2			4			

SHEET NO. S-26
TOTAL SHEETS 46

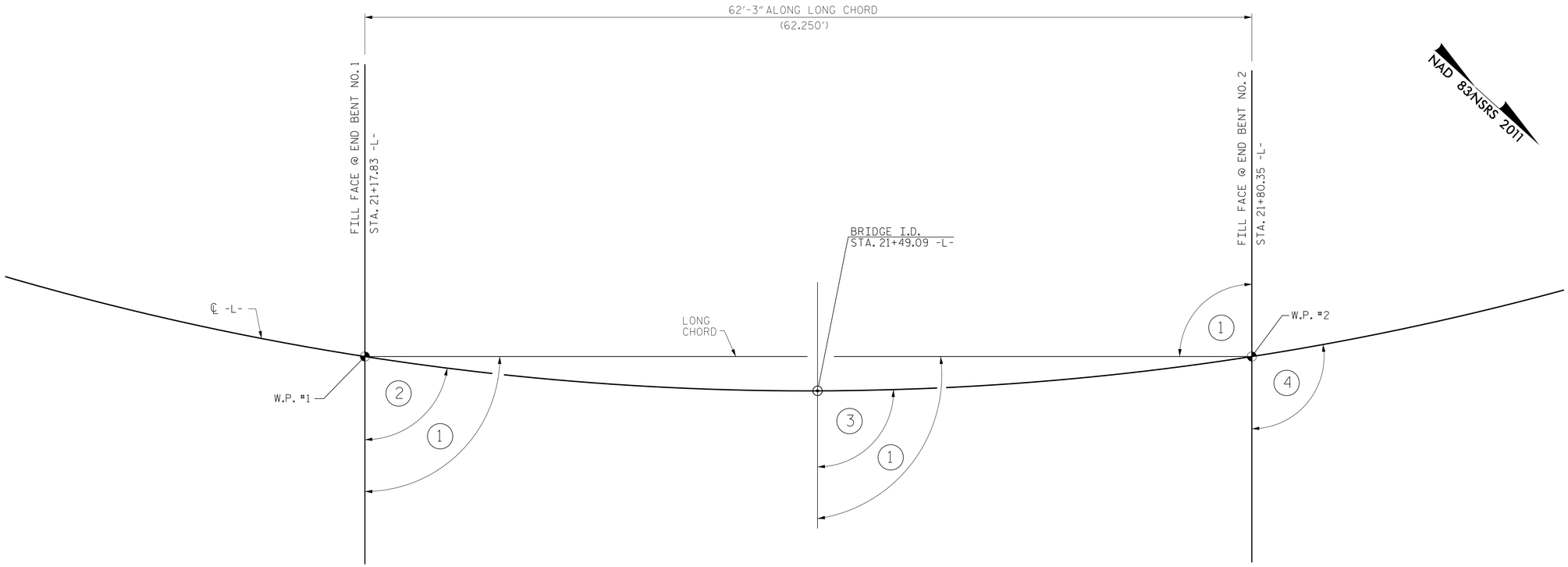

PI Sta 22+00.97
△ = 88° 34' 36.4" (LT)
D = 29° 22' 56.8"
L = 301.46'
T = 190.22'
R = 195.00'

HORIZONTAL CURVE DATA -L-

1. 90°-00'-00" TO LONG CHORD
2. 80°-48'-54" TAN TO CURVE
3. 90°-00'-00" TAN TO CURVE
4. 99°-11-'06" TAN TO CURVE

LONG CHORD LAYOUT

END BENTS ARE PARALLEL.

NORTH CAROLINA PROFESSIONAL SEAL ENGINEER
DocuSigned by: Hardy Willis
CC287FCF0223401...
10/30/2015

PROJECT NO. 17BP.14.R.136
TRANSYLVANIA COUNTY
STATION: 21+49.09 -L-

SHEET 2 OF 3

STATE OF NORTH CAROLINA
DEPARTMENT OF TRANSPORTATION
RALEIGH

GENERAL DRAWING

BRIDGE over LITTLE CREEK
on SR 1143 between US HWY. 64
& SR 1139

Vaughn & Melton
Consulting Engineers
Asheville, North Carolina 828-253-2796
Charlotte, North Carolina 704-357-0488
Tri-Cities, Tennessee 423-467-840
Knoxville, Tennessee 865-546-1800
Middlesboro, Kentucky 606-248-6600
Spartanburg, South Carolina 864-574-4775
Copyright © 2006 Vaughn & Melton, Inc. All Rights Reserved

DWN. BY: AW	DATE: 01/2014	
CHKD. BY: HLW	DATE: 01/2014	
DES. EGR. OF RECORD: CBC	DATE: 01/2014	

REVISIONS						
NO.	BY:	DATE:	NO.	BY:	DATE:	
1			3			
2			4			

SHEET NO. S-27
TOTAL SHEETS 46

BM1: RR SPIKE IN BASE OF 12" POPLAR
N 513489.250 E 845267.220, -BL- STA 7+86.92, ELEV. 1930.4219', 42.95 FT. LT

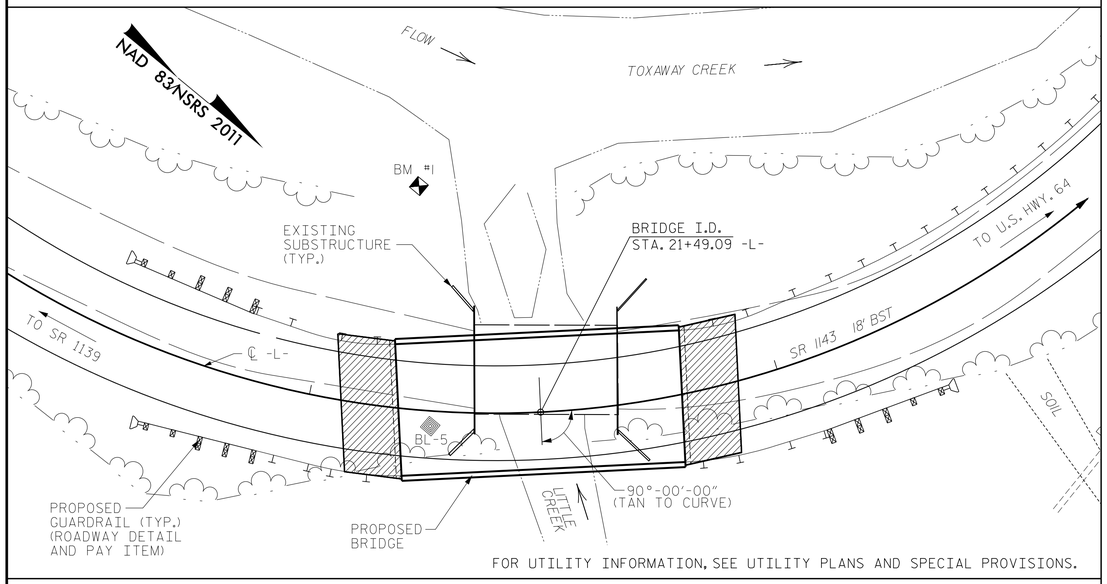

FOR UTILITY INFORMATION, SEE UTILITY PLANS AND SPECIAL PROVISIONS.

LOCATION SKETCH

GENERAL NOTES:

ASSUMED LIVE LOAD = HL-93 OR ALTERNATE LOADING.

THIS BRIDGE HAS BEEN DESIGNED IN ACCORDANCE WITH THE REQUIREMENTS OF THE AASHTO LRFD BRIDGE DESIGN SPECIFICATIONS. THIS BRIDGE IS LOCATED IN SEISMIC PERFORMANCE ZONE 1.

FOR OTHER DESIGN DATA AND GENERAL NOTES, SEE "STANDARD NOTES" SHEET.

FOR EROSION CONTROL MEASURES, SEE EROSION CONTROL PLANS.

THE EXISTING STRUCTURE, CONSISTING OF ONE SPAN, 30 FEET-6 INCHES LONG, TIMBER DECK ON STEEL I-BEAMS, 20.1-FEET WIDE, ON TIMBER CAPS/TIMBER POST AND SILL END BENTS, AND LOCATED AT THE PROPOSED STRUCTURE, SHALL BE REMOVED. THE EXISTING BRIDGE IS PRESENTLY POSTED BELOW THE LEGAL LOAD LIMIT. SHOULD THE STRUCTURAL INTEGRITY OF THE BRIDGE FURTHER DETERIORATE, THIS LOAD LIMITATION MAY BE REDUCED AS FOUND NECESSARY DURING THE LIFE OF THE PROJECT.

REMOVAL OF THE EXISTING BRIDGE SHALL BE PERFORMED SO AS NOT TO ALLOW DEBRIS TO FALL INTO THE WATER. THE CONTRACTOR SHALL REMOVE THE BRIDGE AND SUBMIT PLANS FOR DEMOLITION IN ACCORDANCE WITH ARTICLE 402-2 OF THE STANDARD SPECIFICATIONS.

THE SUBSTRUCTURE OF THE EXISTING BRIDGE INDICATED ON THE PLANS IS FROM THE BEST INFORMATION AVAILABLE. SINCE THIS INFORMATION IS SHOWN FOR THE CONVENIENCE OF THE CONTRACTOR, THE CONTRACTOR SHALL HAVE NO CLAIM WHATSOEVER AGAINST THE DEPARTMENT OF TRANSPORTATION FOR ANY DELAYS OR ADDITIONAL COST INCURRED BASED ON DIFFERENCES BETWEEN THE EXISTING BRIDGE SUBSTRUCTURE SHOWN ON THE PLANS AND THE ACTUAL CONDITIONS AT THE PROJECT SITE.

THIS STRUCTURE HAS BEEN DESIGNED IN ACCORDANCE WITH "HEC 18-EVALUATING SCOUR AT BRIDGES".

FOR SUBMITTAL OF WORKING DRAWINGS, SEE SPECIAL PROVISIONS.

FOR FALSEWORK AND FORMWORK, SEE SPECIAL PROVISIONS.

FOR CRANE SAFETY, SEE SPECIAL PROVISIONS.

FOR GROUT FOR STRUCTURES, SEE SPECIAL PROVISIONS.

INASMUCH AS THE PAINT SYSTEM ON THE EXISTING STRUCTURAL STEEL CONTAINS LEAD, THE CONTRACTOR'S ATTENTION IS DIRECTED TO ARTICLE 107-1 OF THE STANDARD SPECIFICATIONS. ANY COSTS RESULTING FROM COMPLIANCE WITH APPLICABLE STATE OR FEDERAL REGULATIONS PERTAINING TO HANDLING OF MATERIALS CONTAINING LEAD BASED PAINT SHALL BE INCLUDED IN THE BID PRICE FOR "REMOVAL OF EXISTING STRUCTURE AT STATION 21+49.09"

THE MATERIAL SHOWN IN THE CROSS-HATCHED AREA SHALL BE EXCAVATED FOR A DISTANCE OF 25 FT. EACH SIDE OF CENTERLINE ROADWAY AS DIRECTED BY THE ENGINEER. THIS WORK WILL BE PAID FOR AT THE CONTRACT LUMP SUM PRICE FOR UNCLASSIFIED STRUCTURE EXCAVATION. SEE SECTION 412 OF THE STANDARD SPECIFICATIONS.

ASPHALT WEARING SURFACE IS INCLUDED IN ROADWAY QUANTITY ON ROADWAY PLANS.

THE CONTRACTOR SHALL PROVIDE INDEPENDENT ASSURANCE SAMPLES OF REINFORCING STEEL AS FOLLOWS: FOR PROJECTS REQUIRING UP TO 400 TONS OF REINFORCING STEEL, ONE 30 INCH SAMPLE OF EACH SIZE BAR USED, AND FOR PROJECTS REQUIRING OVER 400 TONS OF REINFORCING STEEL, TWO 30 INCH SAMPLES OF EACH SIZE BAR USED. THE BARS FROM WHICH THE SAMPLES ARE TAKEN MUST THEN BE SPLICED WITH REPLACEMENT BARS OF THE SIZE AND LENGTH OF THE SAMPLE, PLUS A MINIMUM LAP SPLICE OF THIRTY BAR DIAMETERS. PAYMENT FOR THE SAMPLES OF REINFORCING STEEL SHALL BE CONSIDERED INCIDENTAL TO VARIOUS PAY ITEMS.

FOUNDATION NOTES:

FOR PILES, SEE SECTION 450 OF THE STANDARD SPECIFICATIONS.

PILES AT END BENT NO. 1 AND END BENT NO. 2 ARE DESIGNED FOR A FACTORED RESISTANCE OF 90 TONS PER PILE.

DRIVE PILES AT END BENT NO. 1 AND END BENT NO. 2 TO A REQUIRED DRIVING RESISTANCE 150 TONS PER PILE.

IT HAS BEEN ESTIMATED THAT A HAMMER WITH AN EQUIVALENT RATED ENERGY IN THE RANGE OF 20 TO 30 FT-KIPS PER BLOW WILL BE REQUIRED TO DRIVE PILES AT END BENT NO. 1 AND END BENT NO. 2. THE ESTIMATED ENERGY RANGE DOES NOT RELEASE THE CONTRACTOR FROM PROVIDING DRIVING EQUIPMENT IN ACCORDANCE WITH SUBARTICLE 450-3(D)(2) OF THE STANDARD SPECIFICATIONS.

PILE EXCAVATION IS REQUIRED TO INSTALL PILES AT END BENT NO. 1. EXCAVATE HOLES AT PILE LOCATIONS TO ELEVATION 1,918.0 FT. FOR PILE EXCAVATION, SEE SECTION 450 OF THE STANDARD SPECIFICATIONS.

PILE EXCAVATION IS REQUIRED TO INSTALL PILES AT END BENT NO. 2. EXCAVATE HOLES AT PILE LOCATIONS TO ELEVATION 1,918.8 FT. FOR PILE EXCAVATION, SEE SECTION 450 OF THE STANDARD SPECIFICATIONS.

CONCRETE IS REQUIRED TO FILL HOLES FOR PILE EXCAVATION AT END BENT NO. 1 AND END BENT NO. 2.

HYDRAULIC DATA

DESIGN DISCHARGE	= 600	CFS
DESIGN FREQUENCY	= 25	YRS
DESIGN HW ELEVATION	= 1928.6	FT
BASE DISCHARGE	= 900	CFS
BASE FREQUENCY	= 100	YRS
BASE HW ELEVATION	= 1929.48	FT

OVERTOPPING FLOOD DATA

OVERTOPPING DISCHARGE	= 2300	CFS
OVERTOPPING FREQUENCY	= 500+	YRS
OVERTOPPING ELEVATION	= 1933.5	FT
DRAINAGE AREA	= 1.85	SQ. MI.

TOTAL BILL OF MATERIAL

	REMOVAL OF EXISTING STRUCTURE	PILE EXCAVATION IN SOIL	PILE EXCAVATION NOT IN SOIL	UNCLASSIFIED STRUCTURE EXCAVATION	CLASS A CONCRETE	BRIDGE APPROACH SLABS	REINFORCING STEEL	HP 12 X 53 STEEL PILES		VERTICAL CONCRETE BARRIER RAIL	RIP RAP CLASS II (2'-0" THICK)	GEOTEXTILE FOR DRAINAGE	ELASTOMERIC BEARINGS	3'-0" x 2'-0" PRESTRESSED CONCRETE CORED SLABS	
	LUMP SUM	LIN. FT.		LUMP SUM	CU. YARDS	LUMP SUM	LBS.	NO.	LIN. FT.	LIN. FT.	TONS	SQ. YARDS	LUMP SUM	NO.	LIN. FT.
SUPERSTRUCTURE						LUMP SUM				120.25			LUMP SUM	10	600.0
END BENT 1		24	27	LUMP SUM	21.0		2,453	5	75		108	122			
END BENT 2		36	15	LUMP SUM	21.0		2,453	5	75		109	123			
TOTAL	LUMP SUM	60	42	LUMP SUM	42.0	LUMP SUM	4,906	10	150	120.25	217	245	LUMP SUM	10	600.0

NORTH CAROLINA PROFESSIONAL SEAL PE-2032 ENGINEER HARDY L. WILKES
DocuSigned by: Hardy Wilkes
CC287FCF0223461...
10/30/2015

PROJECT NO. 17BP.14.R.136
TRANSYLVANIA COUNTY
STATION: 21+49.09 -L-
SHEET 3 OF 3

V&M Vaughn & Melton Consulting Engineers
Asheville, North Carolina 828-253-2796
Charlotte, North Carolina 704-357-0488
Tri-Cities, Tennessee 423-467-840
Knoxville, Tennessee 865-546-5800
Middlesboro, Kentucky 606-248-6600
Spartanburg, South Carolina 864-574-4775
Copyright © 2006 Vaughn & Melton, Inc. All Rights Reserved

STATE OF NORTH CAROLINA
DEPARTMENT OF TRANSPORTATION
RALEIGH

GENERAL DRAWING

BRIDGE over LITTLE CREEK on SR 1143 between US HWY. 64 & SR 1139

DWN. BY: AW DATE: 01/2014
CHKD. BY: HLW DATE: 01/2014
DES. EGR. OF RECORD: CBC DATE: 01/2014

REVISIONS						SHEET NO.
NO.	BY:	DATE:	NO.	BY:	DATE:	S-28
1			3			TOTAL SHEETS
2			4			46

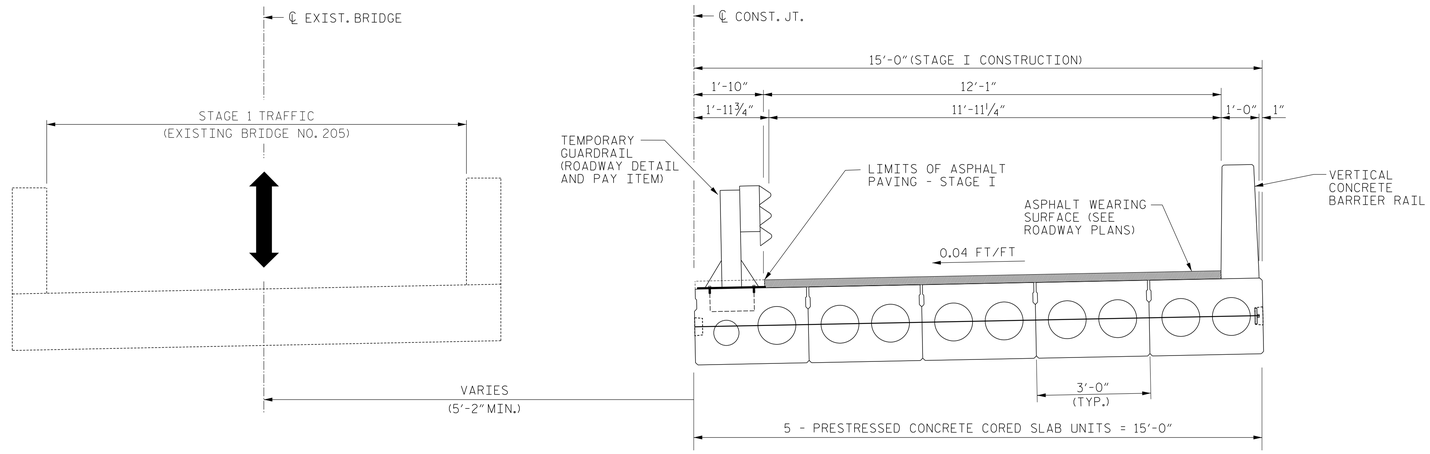

STAGE 1

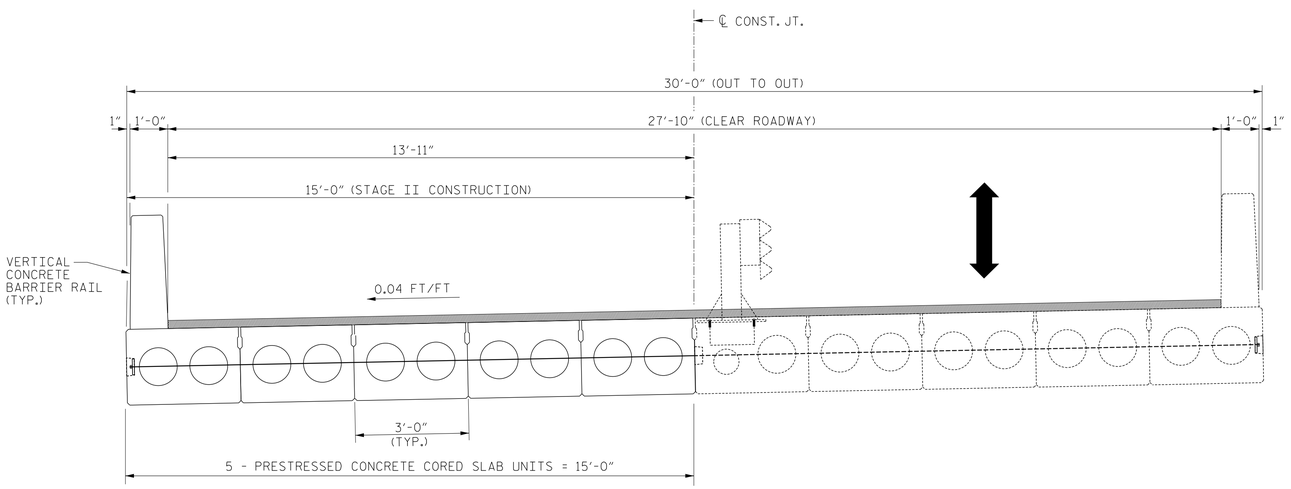

STAGE II

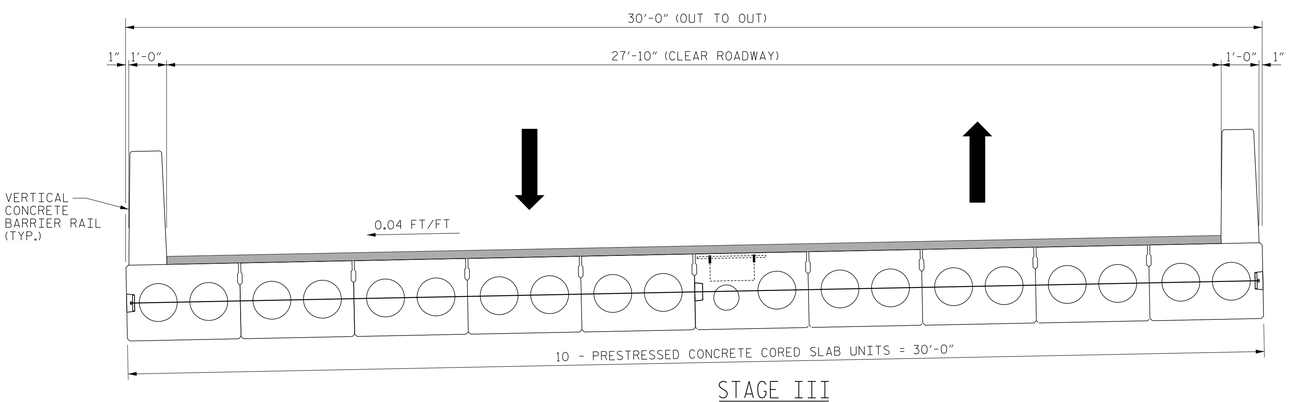

STAGE III

NOTES

FOR TEMPORARY GUARDRAIL DETAILS, SEE "ANCHORAGE DETAILS FOR TEMPORARY GUARDRAIL ANCHOR ASSEMBLY FOR TYPE IV CORED SLAB UNIT" SHEET.

FOR PHASING OF TRAFFIC AND OTHER DETAILS, SEE TRAFFIC MANAGEMENT PLANS.

NORTH CAROLINA PROFESSIONAL SEAL ENGINEER HARDY L. WILLIS JR. 022348

DocuSigned by:
Hardy Willis
CC287BCF022348...
10/30/2015

PROJECT NO. 17BP.14.R.136

TRANSYLVANIA COUNTY

STATION: 21+49.09 -L-

STATE OF NORTH CAROLINA
DEPARTMENT OF TRANSPORTATION
RALEIGH

CONSTRUCTION STAGING

V&M
Vaughn & Melton
Consulting Engineers
Asheville, North Carolina 828-253-2796
Charlotte, North Carolina 704-357-0488
Tri-Cities, Tennessee 423-467-8401
Knoxville, Tennessee 865-546-5800
Middlesboro, Kentucky 606-248-6600
Spartanburg, South Carolina 864-574-4775

Copyright © 2006 Vaughn & Melton, Inc. All Rights Reserved

DWN. BY: AW DATE: 01/2014
CHKD. BY: HLW DATE: 01/2014
DES. EGR. OF RECORD: CBC DATE: 01/2014

REVISIONS						
NO.	BY:	DATE:	NO.	BY:	DATE:	
1			3			
2			4			

SHEET NO. S-29

TOTAL SHEETS 46

LOAD AND RESISTANCE FACTOR RATING (LRFD) SUMMARY FOR PRESTRESSED CONCRETE GIRDERS

LEVEL		VEHICLE	WEIGHT (W) (TONS)	CONTROLLING LOAD RATING	MINIMUM RATING FACTORS (RF)	TONS = W X RF	STRENGTH I LIMIT STATE											SERVICE III LIMIT STATE						COMMENT NUMBER
								MOMENT					SHEAR						MOMENT					
							LIVELOAD FACTORS	DISTRIBUTION FACTORS (DF)	RATING FACTOR	SPAN	GIRDER LOCATION	DISTANCE FROM LEFT END OF SPAN (ft)	DISTRIBUTION FACTORS (DF)	RATING FACTOR	SPAN	GIRDER LOCATION	DISTANCE FROM LEFT END OF SPAN (ft)	LIVELOAD FACTORS	DISTRIBUTION FACTORS (DF)	RATING FACTOR	SPAN	GIRDER LOCATION	DISTANCE FROM LEFT END OF SPAN (ft)	
DESIGN LOAD RATING		HL-93(Inv)	N/A	1	1.33	--	1.75	0.275	1.33	60'	EL	29.5	0.52	**1.33**	60'	EL	**5.9**	0.80	0.275	1.37	60'	EL	29.5	
		HL-93(Opr)	N/A	--	1.725	--	1.35	0.275	1.73	60'	EL	29.5	0.52	1.72	60'	EL	5.9	N/A	--	--	--	--	--	
		HS-20(Inv)	36.000	2	1.601	57.643	1.75	0.275	1.69	60'	EL	29.5	0.52	**1.6**	60'	EL	**5.9**	0.80	0.275	1.74	60'	EL	29.5	
		HS-20(Opr)	36.000	--	2.076	74.723	1.35	0.275	2.19	60'	EL	29.5	0.52	2.08	60'	EL	5.9	N/A	--	--	--	--	--	
LEGAL LOAD RATING	SV	SNSH	13.500	--	3.745	50.557	1.4	0.275	4.55	60'	EL	29.5	0.52	4.63	60'	EL	5.9	0.80	0.275	3.74	60'	EL	29.5	
		SNGARBS2	20.000	--	2.867	57.338	1.4	0.275	3.48	60'	EL	29.5	0.52	3.33	60'	EL	5.9	0.80	0.275	2.87	60'	EL	29.5	
		SNAGRIS2	22.000	--	2.748	60.46	1.4	0.275	3.34	60'	EL	29.5	0.52	3.11	60'	EL	5.9	0.80	0.275	2.75	60'	EL	29.5	
		SNCOTTS3	27.250	--	1.866	50.841	1.4	0.275	2.27	60'	EL	29.5	0.52	2.31	60'	EL	5.9	0.80	0.275	1.87	60'	EL	29.5	
		SNAGGRS4	34.925	--	1.588	55.465	1.4	0.275	1.93	60'	EL	29.5	0.52	1.95	60'	EL	5.9	0.80	0.275	1.59	60'	EL	29.5	
		SNS5A	35.550	--	1.551	55.139	1.4	0.275	1.89	60'	EL	29.5	0.52	1.99	60'	EL	5.9	0.80	0.275	1.55	60'	EL	29.5	
		SNS6A	39.950	--	1.435	57.347	1.4	0.275	1.74	60'	EL	29.5	0.52	1.83	60'	EL	5.9	0.80	0.275	1.44	60'	EL	29.5	
		SNS7B	42.000	--	1.367	57.434	1.4	0.275	1.66	60'	EL	29.5	0.52	1.81	60'	EL	5.9	0.80	0.275	1.37	60'	EL	29.5	
	TTST	TNAGRIT3	33.000	--	1.754	57.887	1.4	0.275	2.13	60'	EL	29.5	0.52	2.17	60'	EL	5.9	0.80	0.275	1.75	60'	EL	29.5	
		TNT4A	33.075	--	1.765	58.389	1.4	0.275	2.15	60'	EL	29.5	0.52	2.1	60'	EL	5.9	0.80	0.275	1.77	60'	EL	29.5	
		TNT6A	41.600	--	1.456	60.551	1.4	0.275	1.77	60'	EL	29.5	0.52	1.96	60'	EL	5.9	0.80	0.275	1.46	60'	EL	29.5	
		TNT7A	42.000	--	1.469	61.714	1.4	0.275	1.79	60'	EL	29.5	0.52	1.88	60'	EL	5.9	0.80	0.275	1.47	60'	EL	29.5	
		TNT7B	42.000	--	1.535	64.463	1.4	0.275	1.87	60'	EL	29.5	0.52	1.76	60'	EL	5.9	0.80	0.275	1.53	60'	EL	29.5	
		TNAGRIT4	43.000	--	1.45	62.329	1.4	0.275	1.76	60'	EL	29.5	0.52	1.7	60'	EL	5.9	0.80	0.275	1.45	60'	EL	29.5	
		TNAGT5A	45.000	--	1.361	61.247	1.4	0.275	1.65	60'	EL	29.5	0.52	1.71	60'	EL	5.9	0.80	0.275	1.36	60'	EL	29.5	
		TNAGT5B	45.000	3	1.34	60.282	1.4	0.275	1.63	60'	EL	29.5	0.52	1.61	60'	EL	5.9	0.80	0.275	**1.34**	60'	EL	**29.5**	

LOAD FACTORS:

	LIMIT STATE	γ_{DC}	γ_{DW}
DESIGN LOAD RATING FACTORS	STRENGTH I	1.25	1.50
	SERVICE III	1.00	1.00

NOTES:

MINIMUM RATING FACTORS ARE BASED ON THE STRENGTH I AND SERVICE III LIMIT STATES.

ALLOWABLE STRESSES FOR SERVICE III LIMIT STATE ARE AS REQUIRED FOR DESIGN.

COMMENTS:

1.
2.
3.
4.

CONTROLLING LOAD RATING
1 DESIGN LOAD RATING (HL-93)
2 DESIGN LOAD RATING (HS-20)
3 LEGAL LOAD RATING **
** SEE CHART FOR VEHICLE TYPE

GIRDER LOCATION
I - INTERIOR GIRDER
EL - EXTERIOR LEFT GIRDER
ER - EXTERIOR RIGHT GIRDER

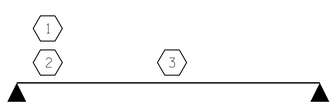

LRFR SUMMARY

FOR SPAN A

NORTH CAROLINA PROFESSIONAL SEAL ENGINEER L. HARDY WILLIS 047777
DocuSigned by: Hardy Willis
C0287FCF0223461...
10/30/2015

PROJECT NO. 17BP.14.R.136

TRANSYLVANIA COUNTY

STATION: 21+49.09 -L-

STATE OF NORTH CAROLINA
DEPARTMENT OF TRANSPORTATION
RALEIGH

STANDARD

LRFR SUMMARY FOR 60' CORED SLAB UNIT 90° SKEW

(NON-INTERSTATE TRAFFIC)

REVISIONS						SHEET NO.
NO.	BY:	DATE:	NO.	BY:	DATE:	S-30
1			3			TOTAL SHEETS
2			4			46

ASSEMBLED BY :	AW	DATE :	01/14
CHECKED BY :	CBC	DATE :	01/14
DRAWN BY : CVC	6/10		
CHECKED BY : DNS	6/10		

STD. NO. 24LRFR1_90S_60L

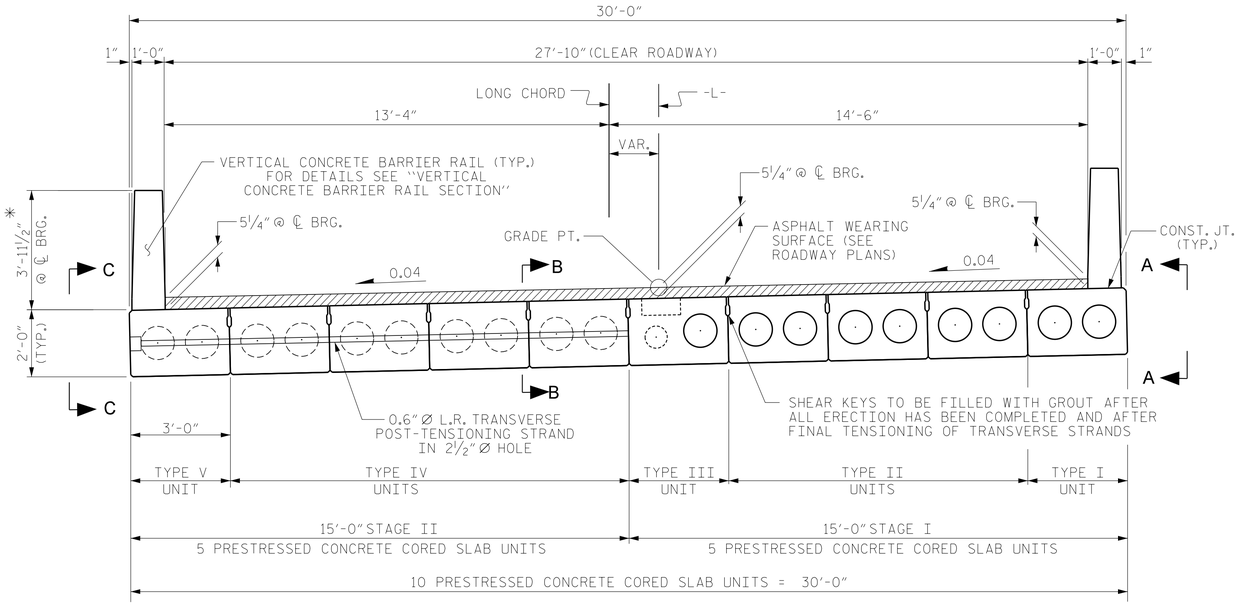

HALF SECTION
AT INTERMEDIATE DIAPHRAGMS

HALF SECTION
THROUGH VOIDS

TYPICAL SECTION

* - THE MAXIMUM BARRIER RAIL HEIGHT AND ASPHALT THICKNESS IS SHOWN. THE HEIGHT OF THE BARRIER RAIL AND ASPHALT THICKNESS VARIES WHILE THE TOP OF THE BARRIER RAIL FOLLOWS THE PROFILE OF THE GUTTERLINE. FOR RAIL HEIGHT DETAILS AND ASPHALT THICKNESS, SEE THE "VERTICAL CONCRETE BARRIER RAIL SECTION" DETAIL.

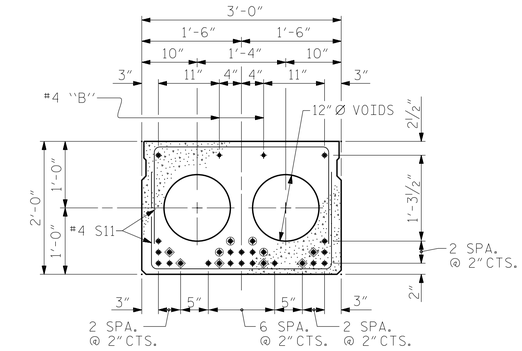

INTERIOR SLAB SECTION (60' UNIT)
(24 STRANDS REQUIRED)

0.6" Ø LOW RELAXATION STRAND LAYOUT

(TYPE I, II, IV & V)

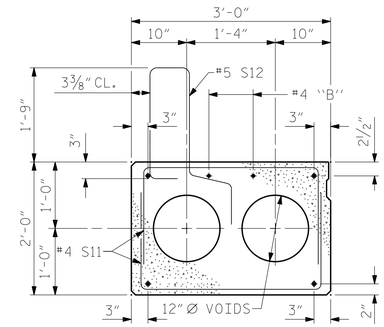

EXTERIOR SLAB SECTION

(FOR PRESTRESSED STRAND LAYOUT, SEE INTERIOR SLAB SECTION.)

◈ BOND SHALL BE BROKEN ON THESE STRANDS FOR A DISTANCE OF 12'-0" FROM END OF CORED SLAB UNIT. SEE STANDARD SPECIFICATIONS, ARTICLE 1078-7.

◉ OPTIONAL FULL LENGTH DEBONDED STRANDS. THESE STRANDS ARE NOT REQUIRED. IF THE FABRICATOR CHOOSES TO INCLUDE THESE STRANDS IN THE CORED SLAB UNIT, THE STRANDS SHALL BE DEBONDED FOR THE FULL LENGTH OF THE UNIT AT NO ADDITIONAL COST. SEE STANDARD SPECIFICATIONS, ARTICLE 1078-7.

DEBONDING LEGEND

FIXED END

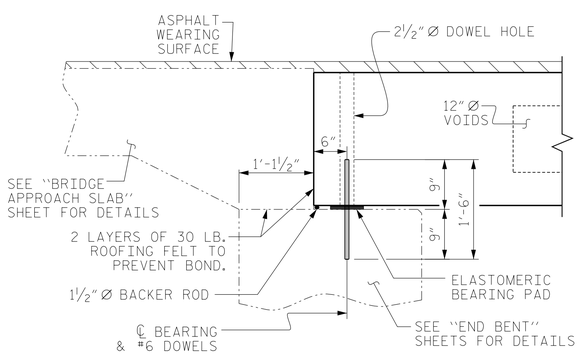

SECTION AT END BENT

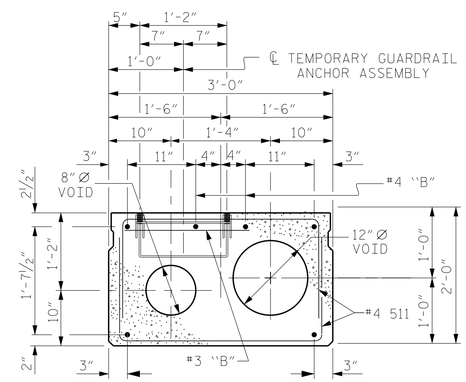

INTERIOR SLAB SECTION

TYPE III

(FOR PRESTRESSED STRAND LAYOUT, SEE "0.6" Ø LOW RELAXATION STRAND LAYOUT" (TYPE I, II, IV AND V)

FOR TEMPORARY GUARDRAIL ANCHOR ASSEMBLY LOCATION, SEE SECTION OF ANCHOR ASSEMBLY LOCATION ON "ANCHORAGE DETAILS FOR TEMPORARY GUARDRAIL ANCHOR ASSEMBLY FOR TYPE IV CORED SLAB UNIT" SHEET.

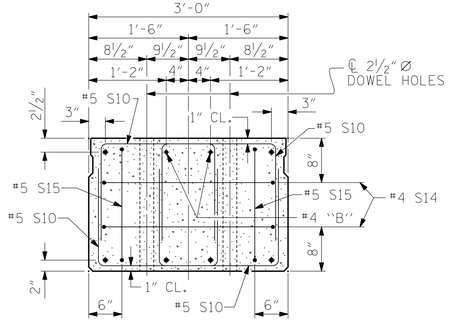

END ELEVATION

SHOWING PLACEMENT OF DOUBLE STIRRUPS AND LOCATION OF DOWEL HOLES. (STRAND LAYOUT NOT SHOWN.) INTERIOR SLAB UNIT SHOWN-EXTERIOR SLAB UNIT SIMILAR EXCEPT SHEAR KEY LOCATION.

DocuSigned by:
Hardy Willis
CC287FCF0223461...
10/30/2015

PROJECT NO. 17BP.14.R.136
TRANSYLVANIA COUNTY
STATION: 21+49.09 -L-

SHEET 1 OF 5

STATE OF NORTH CAROLINA
DEPARTMENT OF TRANSPORTATION
RALEIGH
STANDARD

3'-0" X 2'-0" PRESTRESSED CONCRETE CORED SLAB UNIT

ASSEMBLED BY : AW	DATE : 01/14		
CHECKED BY : CBC	DATE : 01/14		
DRAWN BY : MAA 6/10	REV. 12/11 MAA/AAC		
CHECKED BY : MKT 7/10			

REVISIONS						SHEET NO.
NO.	BY:	DATE:	NO.	BY:	DATE:	S-31
1			3			TOTAL SHEETS
2			4			46

STD. NO. 24PCS4_30_90S

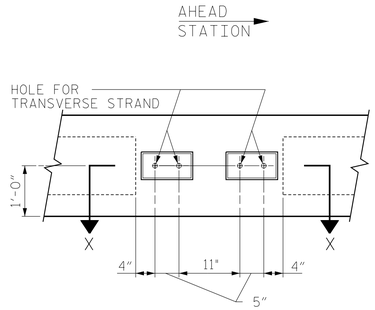

VIEW A-A
SEE SHEET 1 OF 5

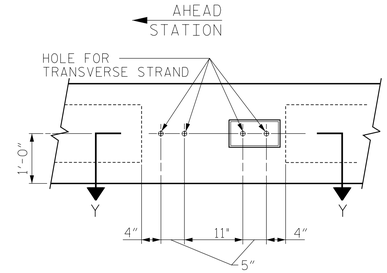

VIEW B-B
SEE SHEET 1 OF 5

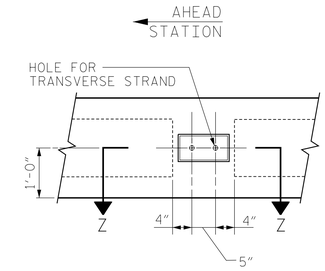

VIEW C-C
SEE SHEET 1 OF 5

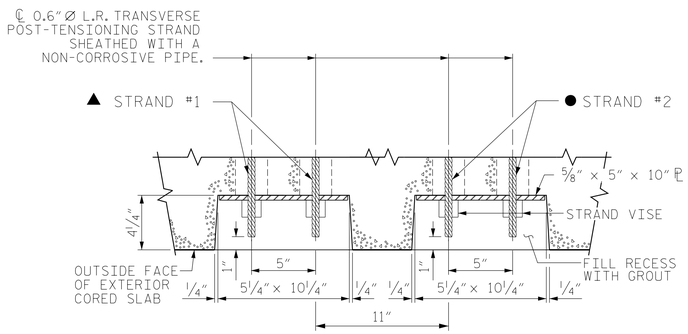

SECTION X-X
(TYPE I UNIT)

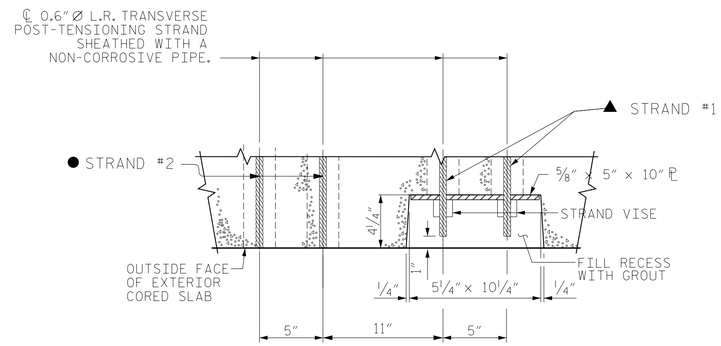

SECTION Y-Y
(TYPE III UNIT)

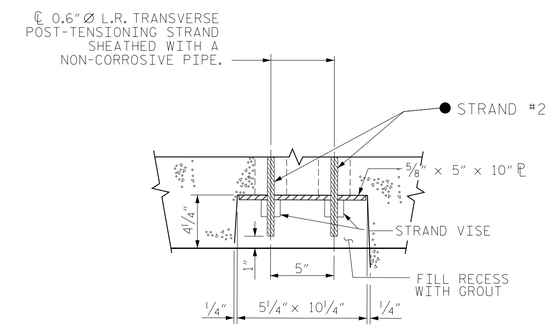

SECTION Z-Z
(TYPE V UNIT)

▲ STRANDS #1 GO THROUGH 5 CORED SLAB UNITS (TO BE TENSIONED DURING STAGE I CONSTRUCTION).

● STRANDS #2 GO THROUGH ALL 10 CORED SLAB UNITS (TO BE TENSIONED DURING STAGE II CONSTRUCTION).

GROUTED RECESS AT END OF POST-TENSIONED STRAND

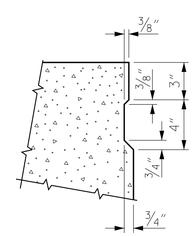

SHEAR KEY DETAIL

NOTE: OMIT SHEAR KEY ON OUTSIDE FACE OF EXTERIOR CORED SLABS.

PROJECT NO. 17BP.14.R.136

TRANSYLVANIA COUNTY

STATION: 21+49.09 -L-

SHEET 2 OF 5

NORTH CAROLINA PROFESSIONAL SEAL ENGINEER

DocuSigned by: Hardy Wilkes
CC3871 CF 4223461...
10/30/2015

STATE OF NORTH CAROLINA
DEPARTMENT OF TRANSPORTATION
RALEIGH

STANDARD

3'-0'' X 2'-0''
PRESTRESSED CONCRETE
CORED SLAB UNIT

REVISIONS						SHEET NO.
NO.	BY:	DATE:	NO.	BY:	DATE:	S-32
1			3			TOTAL SHEETS
2			4			46

DRAWN BY :	AW	DATE :	01/14
CHECKED BY :	CBC	DATE :	01/14

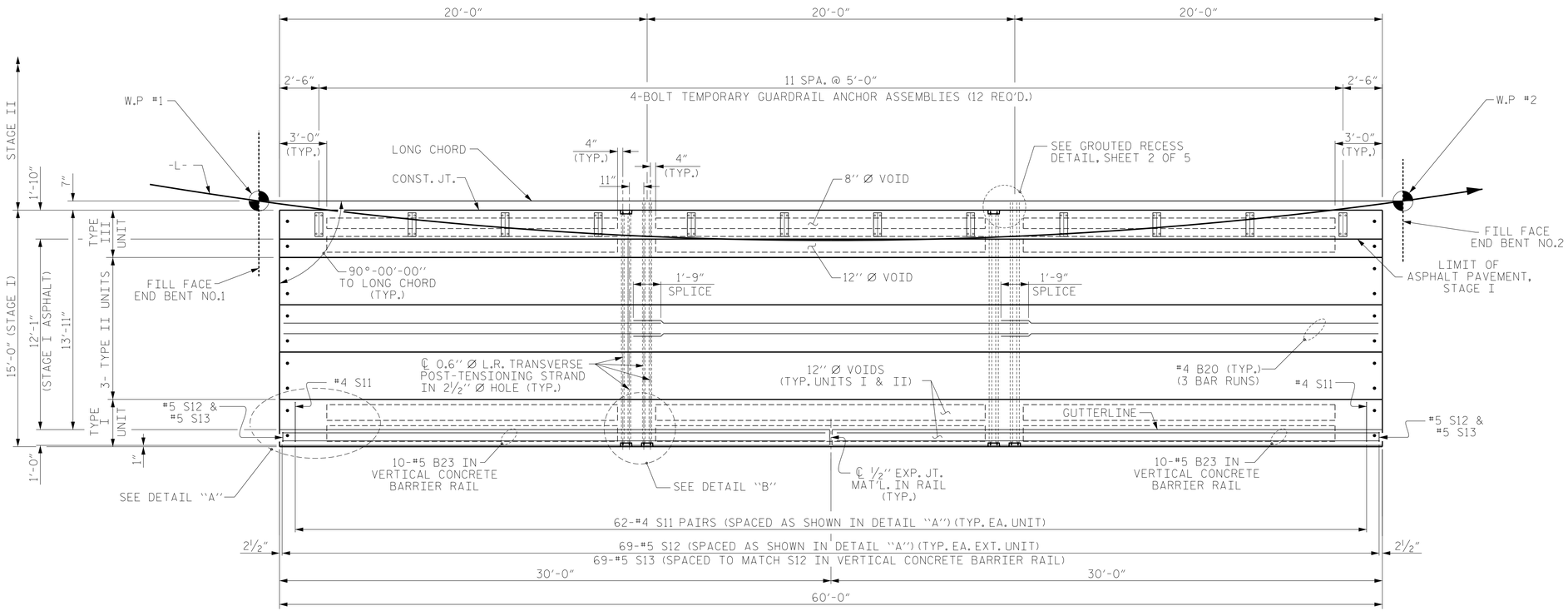

PLAN

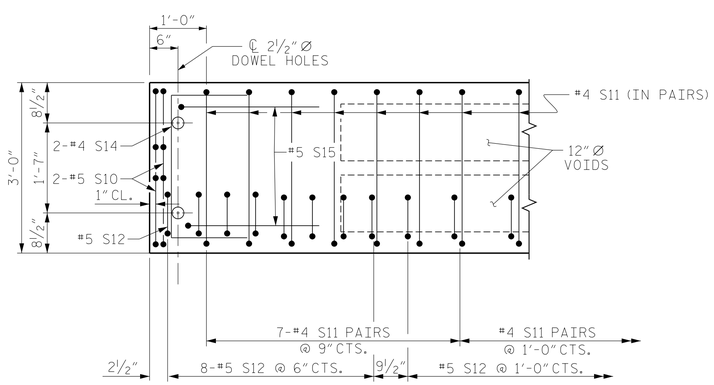

DETAIL "A"

NOTE: EXTERIOR UNIT SHOWN - INTERIOR UNIT SIMILAR EXCEPT OMIT #5 S12 BARS.

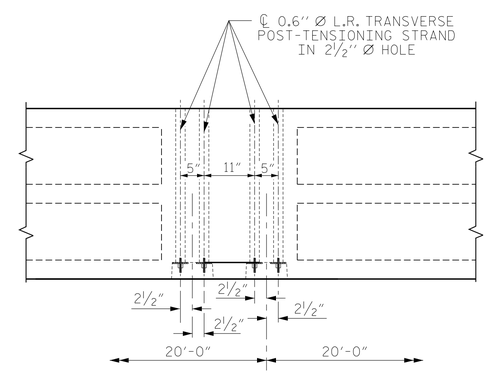

DETAIL "B"

#4 S11 BARS MAY BE SHIFTED AS NECESSARY TO MAINTAIN 1" CLEAR TO GROUTED RECESS AND 2½" Ø TRANSVERSE POST-TENSIONING STRAND HOLES

ASSEMBLED BY :	AW	DATE :	01/14
CHECKED BY :	CBC	DATE :	01/14
DRAWN BY : MAA	6/10	REV. 12/5/11	MAA/AAC
CHECKED BY : MKT	7/10		

$$$$$$SYSTIME$$$$$
$$$$$$$$$$$$$$$$$$$$$$DGN$$$$$$$$$$$$$$$$$$$$$$$
$$$$USERNAME$$$$

NORTH CAROLINA PROFESSIONAL SEAL ENGINEER
DocuSigned by: Hardie Willis
CC2B0C1CF022461...
10/30/2015

PROJECT NO. 17BP.14.R.136
TRANSYLVANIA COUNTY
STATION: 21+49.09 -L-

SHEET 3 OF 5

STATE OF NORTH CAROLINA
DEPARTMENT OF TRANSPORTATION
RALEIGH

PLAN OF 60' UNIT 27'-10" CLEAR ROADWAY 90° SKEW

STAGE I

REVISIONS						SHEET NO.
NO.	BY:	DATE:	NO.	BY:	DATE:	S-33
1			3			TOTAL SHEETS
2			4			46

STD. NO. 24PCS_30_90S_60L

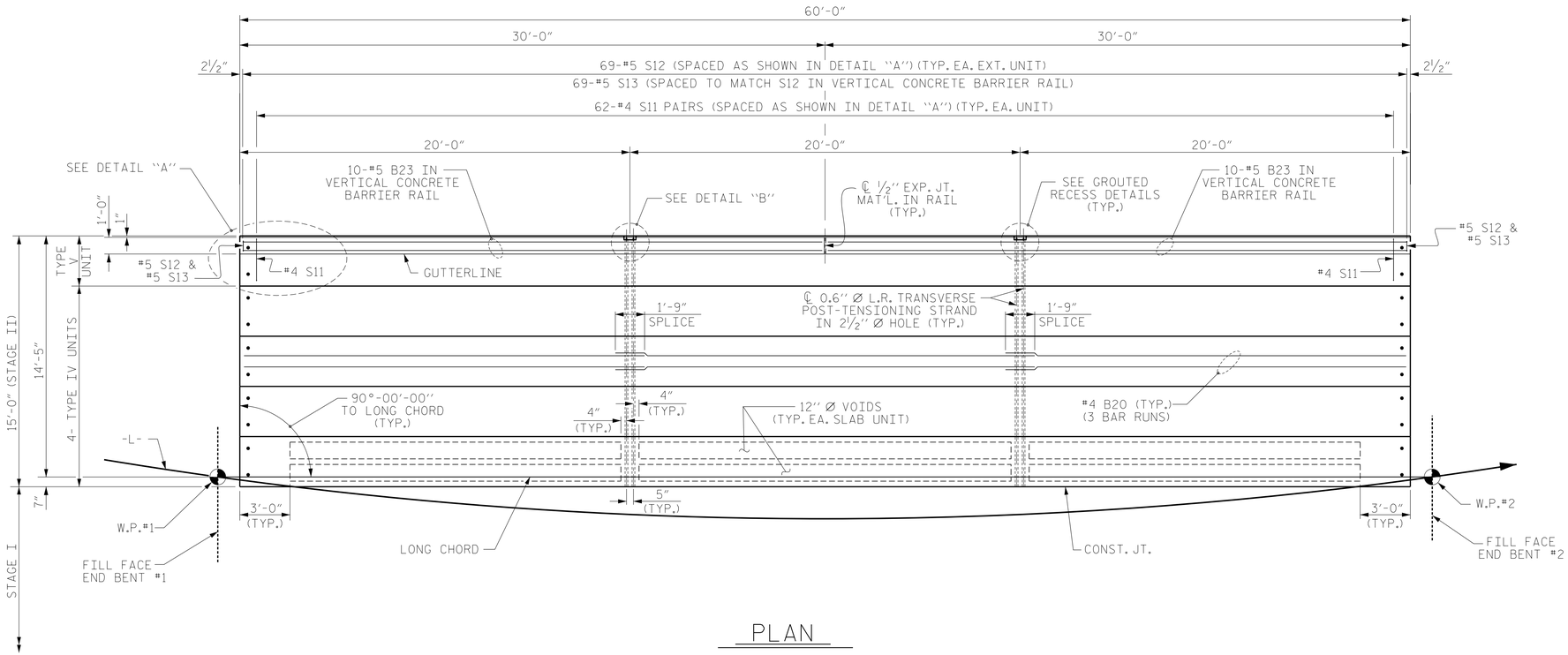

PLAN

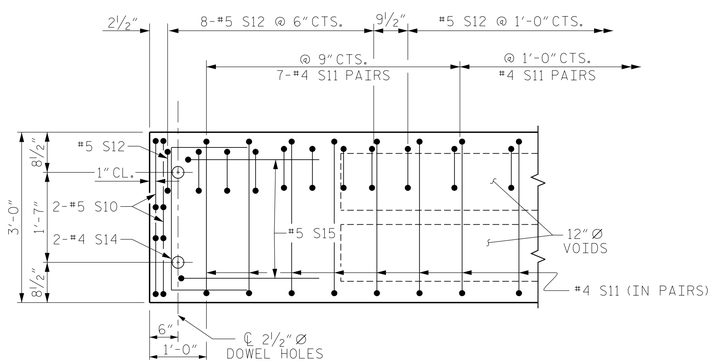

DETAIL "A"

NOTE: EXTERIOR UNIT SHOWN - INTERIOR UNIT SIMILAR EXCEPT OMIT #5 S12 BARS.

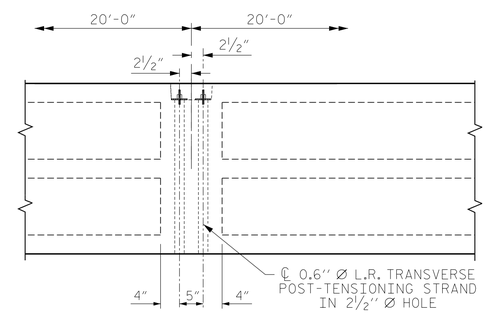

DETAIL "B"

#4 S11 BARS MAY BE SHIFTED AS NECESSARY TO MAINTAIN 1" CLEAR TO GROUTED RECESS AND 2½" Ø TRANSVERSE POST-TENSIONING STRAND HOLES

NORTH CAROLINA PROFESSIONAL SEAL 24777 ENGINEER

DocuSigned by: Hardy Willis
CC3071CF0223461...

10/30/2015

PROJECT NO. 17BP.14.R.136
TRANSYLVANIA COUNTY
STATION: 21+49.09 -L-

SHEET 4 OF 5

STATE OF NORTH CAROLINA
DEPARTMENT OF TRANSPORTATION
RALEIGH

PLAN OF 60' UNIT 27'-10" CLEAR ROADWAY 90° SKEW

STAGE II

REVISIONS						SHEET NO.
NO.	BY:	DATE:	NO.	BY:	DATE:	S-34
1			3			TOTAL SHEETS
2			4			46

ASSEMBLED BY :	AW	DATE :	01/14
CHECKED BY :	CBC	DATE :	01/14
DRAWN BY : MAA	6/10	REV. 12/5/11	MAA/AAC
CHECKED BY : MKT	7/10		

STD. NO. 24PCS_30_90S_60L

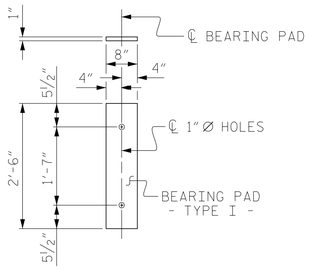

FIXED END
(TYPE I - 20 REQ'D)

ELASTOMERIC BEARING DETAILS

ELASTOMER IN ALL BEARINGS SHALL BE 60 DUROMETER HARDNESS.

CORED SLABS REQUIRED

	NUMBER	LENGTH	TOTAL LENGTH
60' UNIT			
EXTERIOR C.S.	2	60'-0"	120'-0"
INTERIOR C.S.	8	60'-0"	480'-0"
TOTAL	10		600'-0"

DEAD LOAD DEFLECTION AND CAMBER

	3'-0" x 2'-0"
60' CORED SLAB UNIT	0.6" Ø L.R. STRAND
CAMBER (SLAB ALONE IN PLACE)	3⅜" ↑
DEFLECTION DUE TO SUPERIMPOSED DEAD LOAD**	½" ↓
FINAL CAMBER	2⅞" ↑

** INCLUDES FUTURE WEARING SURFACE

GUTTERLINE ASPHALT THICKNESS & RAIL HEIGHT

	ASPHALT OVERLAY THICKNESS @ MID-SPAN	RAIL HEIGHT @ MID-SPAN
60' UNITS	2⅜"	3'-8⅝"

BAR TYPES

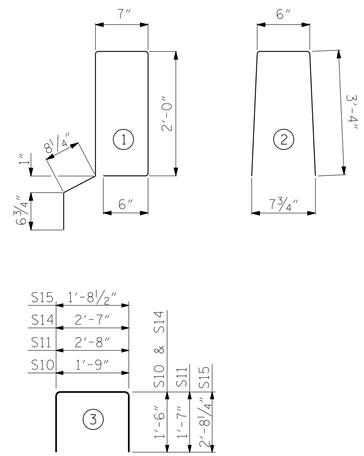

ALL BAR DIMENSIONS ARE OUT TO OUT

NOTES

ALL PRESTRESSING STRANDS SHALL BE 7-WIRE LOW RELAXATION GRADE 270 STRANDS AND SHALL CONFORM TO AASHTO M203 EXCEPT FOR SAMPLING REQUIREMENTS WHICH SHALL BE IN ACCORDANCE WITH THE STANDARD SPECIFICATIONS.

ALL REINFORCING STEEL CAST WITH THE CORED SLAB SECTIONS SHALL BE GRADE 60 AND SHALL BE INCLUDED IN THE UNIT PRICE BID FOR PRESTRESSED CONCRETE CORED SLABS.

RECESSES FOR TRANSVERSE STRANDS SHALL BE GROUTED AFTER THE TENSIONING OF THE STRANDS.

THE 2½" Ø DOWEL HOLES AT FIXED ENDS OF SLAB SECTIONS SHALL BE FILLED WITH NON-SHRINK GROUT.

THE BACKER RODS SHALL CONFORM TO THE REQUIREMENTS OF TYPE M BOND BREAKER. SEE SECTION 1028 OF THE STANDARD SPECIFICATIONS.

WHEN CORED SLABS ARE CAST, AN INTERNAL HOLD-DOWN SYSTEM SHALL BE EMPLOYED TO PREVENT VOIDS FROM RISING OR MOVING SIDEWAYS. AT LEAST SIX WEEKS PRIOR TO CASTING CORED SLABS, THE CONTRACTOR SHALL SUBMIT TO THE ENGINEER FOR REVIEW AND COMMENT, DETAILED DRAWINGS OF THE PROPOSED HOLD-DOWN SYSTEM. IN ADDITION TO STRUCTURAL DETAILS, LOCATION AND SPACING OF THE HOLD-DOWNS SHALL BE INDICATED.

THE TRANSFER OF LOAD FROM THE ANCHORAGES TO THE CORED SLAB UNIT SHALL BE DONE WHEN THE CONCRETE HAS REACHED A COMPRESSIVE STRENGTH OF NOT LESS THAN THE REQUIRED STRENGTH SHOWN IN THE "CONCRETE RELEASE STRENGTH" TABLE.

ALL REINFORCING STEEL IN VERTICAL CONCRETE BARRIER RAILS SHALL BE EPOXY COATED.

PRESTRESSING STRANDS SHALL BE CUT FLUSH WITH THE CORED SLAB UNIT ENDS.

APPLY EPOXY PROTECTIVE COATING TO CORED SLAB UNIT ENDS.

GROOVED CONTRACTION JOINTS, ½" IN DEPTH, SHALL BE TOOLED IN ALL EXPOSED FACES OF THE BARRIER RAIL AND IN ACCORDANCE WITH ARTICLE 825-10(B) OF THE STANDARD SPECIFICATIONS. A CONTRACTION JOINT SHALL BE LOCATED AT EACH THIRD POINT BETWEEN BARRIER RAIL EXPANSION JOINTS. ONLY ONE CONTRACTION JOINT IS REQUIRED AT MIDPOINT OF BARRIER RAIL SEGMENTS LESS THAN 20 FEET IN LENGTH AND NO CONTRACTION JOINTS ARE REQUIRED FOR THOSE SEGMENTS LESS THAN 10 FEET IN LENGTH.

TRANSVERSE POST TENSIONING OF THE CORED SLAB UNITS SHALL BE DONE IN ACCORDANCE WITH THE STANDARD SPECIFICATIONS.

MAINTAIN A SYMMETRIC TENSION FORCE BETWEEN EACH PAIR OF TRANSVERSE POST TENSIONING STRANDS IN THE DIAPHRAGM.

THE #4 S11 STIRRUPS MAY BE SHIFTED AS NECESSARY TO MAINTAIN 1" CLEAR TO THE GROUTED RECESS.

FOR GROUT FOR STRUCTURES, SEE SPECIAL PROVISIONS.

BILL OF MATERIAL FOR ONE 60' CORED SLAB UNIT

				EXTERIOR UNIT		INTERIOR UNIT	
BAR	NUMBER	SIZE	TYPE	LENGTH	WEIGHT	LENGTH	WEIGHT
B20	6	#4	STR	21'-2"	85	21'-2"	85
S10	8	#5	3	4'-9"	40	4'-9"	40
S11	124	#4	3	5'-10"	483	5'-10"	483
*S12	69	#5	1	6'-4"	456		
S14	4	#4	3	5'-7"	15	5'-7"	15
S15	4	#5	3	7'-1"	30	7'-1"	30
REINFORCING STEEL			LBS.		653		653
*EPOXY COATED REINFORCING STEEL			LBS.		456		
7000 P.S.I. CONCRETE			CU. YDS.		10.2		10.2
0.6" Ø L.R. STRANDS			No.		24		24

BILL OF MATERIAL FOR VERTICAL CONCRETE BARRIER RAIL

BAR	BARS PER PAIR OF EXTERIOR UNITS 60' UNIT	TOTAL NO.	SIZE	TYPE	LENGTH	WEIGHT
*B23	40		#5	STR	29'-7"	1234
*S13	138		#5	2	7'-2"	1032
*EPOXY COATED REINFORCING STEEL				LBS.		2266
CLASS AA CONCRETE				CU.YDS.		16.2
TOTAL VERTICAL CONCRETE BARRIER RAIL				LN. FT.		120.25

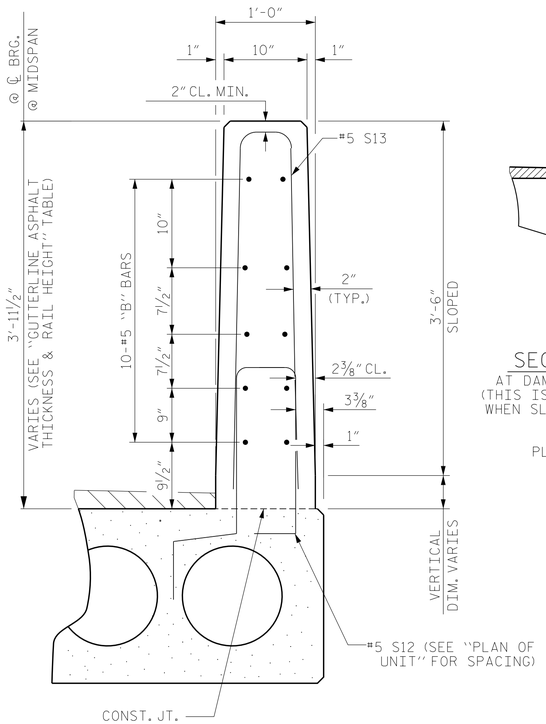

SECTION THRU RAIL

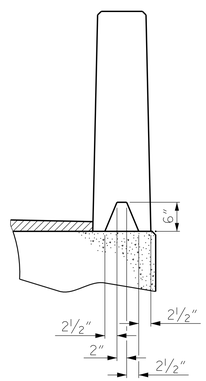

SECTION S-S
AT DAM IN OPEN JOINT
(THIS IS TO BE USED ONLY WHEN SLIP FORM IS USED)

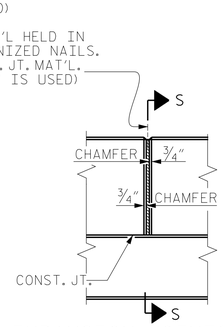

ELEVATION AT EXPANSION JOINTS

VERTICAL CONCRETE BARRIER RAIL DETAILS

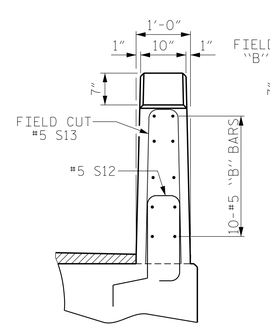

END VIEW

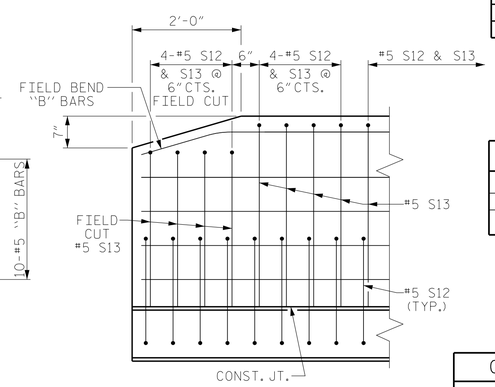

SIDE VIEW

END OF RAIL DETAILS

CONCRETE RELEASE STRENGTH

UNIT	PSI
60' UNITS	4800

GRADE 270 STRANDS

	0.6" Ø L.R.
AREA (SQUARE INCHES)	0.217
ULTIMATE STRENGTH (LBS. PER STRAND)	58,600
APPLIED PRESTRESS (LBS. PER STRAND)	43,950

PROJECT NO. 17BP.14.R.136
TRANSYLVANIA COUNTY
STATION: 21+49.09 -L-

SHEET 5 OF 5

NORTH CAROLINA PROFESSIONAL SEAL ENGINEER HARDY L. WILLIS
DocuSigned by: Hardy Willis
DocuSign Envelope ID: 0C2E171-F0223461...
10/30/2015

STATE OF NORTH CAROLINA
DEPARTMENT OF TRANSPORTATION
RALEIGH

STANDARD
3'-0" X 2'-0"
PRESTRESSED CONCRETE
CORED SLAB UNIT

ASSEMBLED BY : AW	DATE : 01/14
CHECKED BY : CBC	DATE : 01/14
DRAWN BY : MAA 6/10	REV. 12/11 MAA/AAC
CHECKED BY : MKT 7/10	

REVISIONS						SHEET NO.
NO.	BY:	DATE:	NO.	BY:	DATE:	S-35
1			3			TOTAL SHEETS
2			4			46

STD. NO. 24PCS3_30_90S

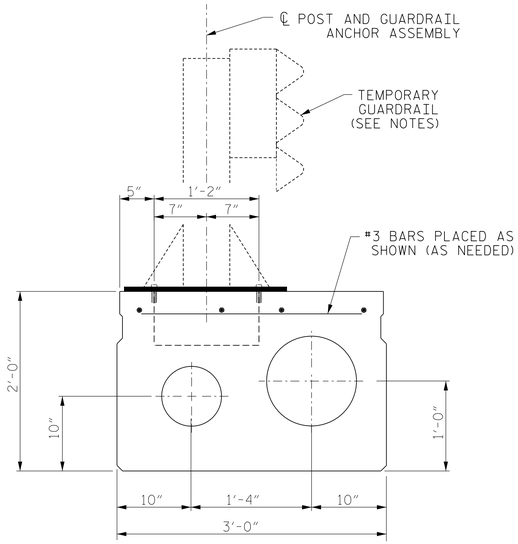

SECTION OF ANCHOR ASSEMBLY LOCATION

(TYPE III UNIT - STAGE I)
THE #3 BARS ARE INCIDENTAL AND THEIR COST SHALL BE INCLUDED IN THE PRICE BID FOR THE PRESTRESSED CONCRETE CORED SLABS.

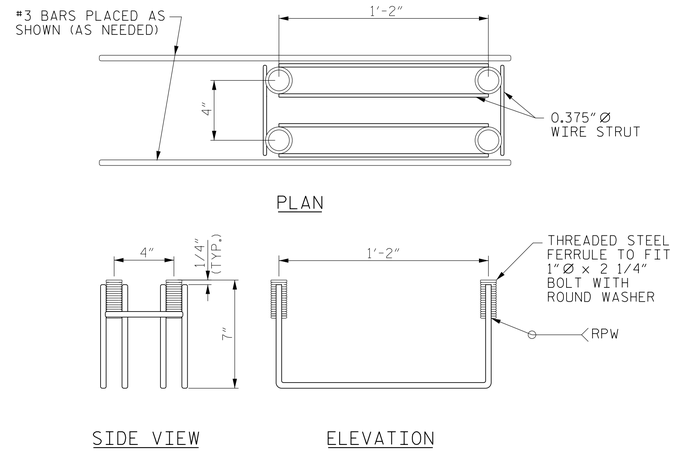

MINIMUM LENGTH OF THREADS IN INSERT (FERRULE): 2 1/2"

TEMPORARY GUARDRAIL ANCHOR ASSEMBLY

(14 ASSEMBLIES REQUIRED IN THE TYPE III CORED SLAB UNITS)
(6 ASSEMBLIES REQUIRED IN THE APPROACH SLABS)

NOTES

THE TEMPORARY GUARDRAIL ANCHOR ASSEMBLY SHALL CONSIST OF THE FOLLOWING COMPONENTS:

A. FERRULES SHALL BE MADE FROM STEEL MEETING THE REQUIREMENTS OF AASHTO M169, GRADE 12L14 AND SHALL HAVE A MINIMUM LENGTH OF THREADS OF 2½".

B. 4 - 1" Ø X 2¼" BOLTS WITH WASHERS. BOLTS SHALL CONFORM TO THE REQUIREMENTS OF ASTM A307. BOLTS AND WASHERS SHALL BE GALVANIZED. (AT THE CONTRACTOR'S OPTION STAINLESS STEEL BOLTS AND WASHERS MAY BE USED AS AN ALTERNATE FOR THE 1" Ø X 2¼" GALVANIZED BOLTS AND WASHERS. THEY SHALL CONFORM TO OR EXCEED THE MECHANICAL REQUIREMENTS OF ASTM A307. THE USE OF THIS ALTERNATE SHALL BE APPROVED BY THE ENGINEER.)

C. WIRE STRUTS SHOWN IN THE TEMPORARY GUARDRAIL ANCHOR ASSEMBLY DETAIL ARE THE MINIMUM ALLOWABLE SIZE AND SHALL HAVE A MINIMUM TENSILE STRENGTH OF 100,000 PSI.

TEMPORARY GUARDRAIL ANCHOR ASSEMBLY WITH BOLTS SHALL BE ASSEMBLED IN THE SHOP. BOLT THREADS MAY BE RECUT AS NECESSARY TO ENSURE FIT.

THE COST OF THE TEMPORARY GUARDRAIL ANCHOR ASSEMBLY COMPLETE IN PLACE SHALL BE INCLUDED, AS APPLICABLE, IN THE UNIT CONTRACT PRICE BID FOR 3'-0" X 2'-0" PRESTRESSED CONCRETE CORED SLAB OR LUMP SUM PRICE BID FOR APPROACH SLABS.

FERRULES SHALL BE PLUGGED DURING CASTING OF THE CORED SLAB UNITS OR POURING OF APPROACH SLAB AS RECOMMENDED BY THE MANUFACTURER.

AT THE CONTRACTOR'S OPTION, FERRULES WITH OPEN OR CLOSED ENDS MAY BE USED.

PAYMENT FOR TEMPORARY GUARDRAIL, POST, AND POST BASE PLATES IS INCLUDED IN ROADWAY PAY ITEMS.

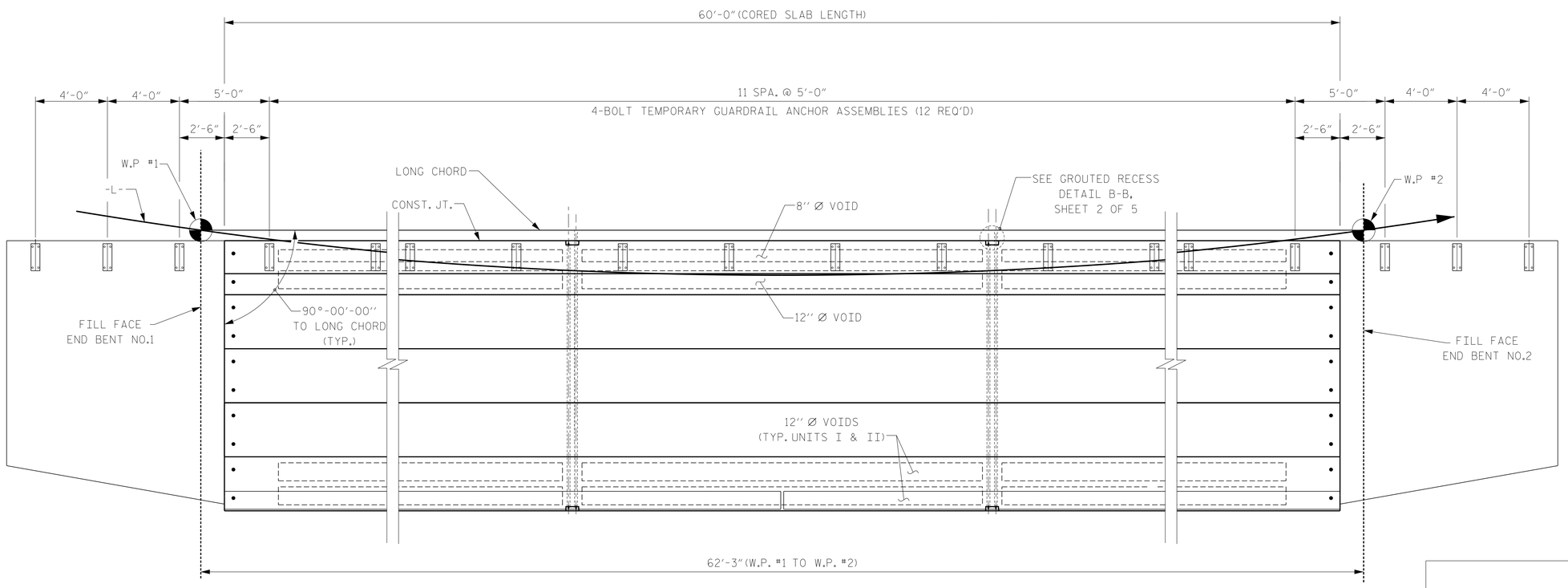

RAIL POST SPACING FOR TEMPORARY GUARDRAIL - STAGE I

NORTH CAROLINA PROFESSIONAL SEAL ENGINEER
DocuSigned by: Hardy Wilkes
CC7B7FCF0223461...
10/30/2015

PROJECT NO. 17BP.14.R.136
TRANSYLVANIA COUNTY
STATION: 21+49.09 -L-

STATE OF NORTH CAROLINA
DEPARTMENT OF TRANSPORTATION
RALEIGH

ANCHORAGE DETAILS FOR TEMPORARY GUARDRAIL ANCHOR ASSEMBLY FOR TYPE IV CORED SLAB UNIT - STAGE I

ASSEMBLED BY : AW		DATE : 01/14	
CHECKED BY : CBC		DATE : 01/14	
DRAWN BY : DGE 5/09	REV. 12/11	MAA/AAC	
CHECKED BY : BCH 6/09	.		

REVISIONS								SHEET NO.
NO.	BY:	DATE:		NO.	BY:	DATE:		S-36
1				3				TOTAL SHEETS
2				4				46

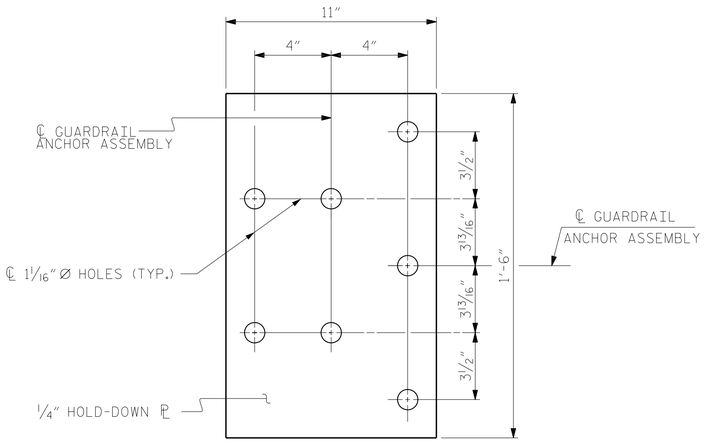

PLAN

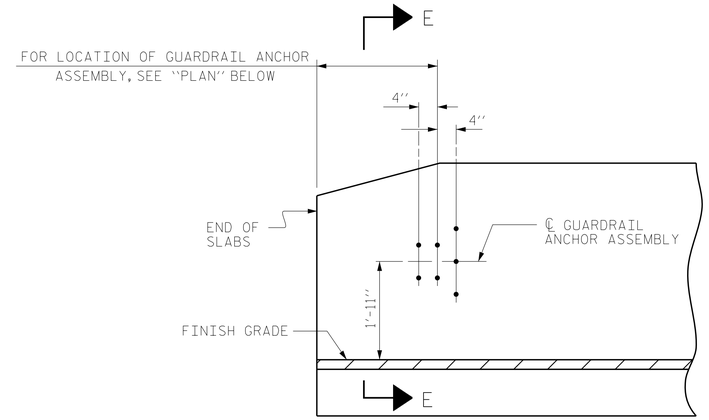

ELEVATION

NOTES

THE GUARDRAIL ANCHOR ASSEMBLY SHALL CONSIST OF A 1/4" HOLD DOWN PLATE AND 7 - 7/8" Ø BOLTS WITH NUTS AND WASHERS.

THE HOLD-DOWN PLATE SHALL CONFORM TO AASHTO M270 GRADE 36. AFTER FABRICATION, THE HOLD-DOWN PLATE SHALL BE HOT-DIP GALVANIZED IN ACCORDANCE WITH AASHTO M111.

BOLTS SHALL CONFORM TO THE REQUIREMENTS OF ASTM A307 AND NUTS SHALL CONFORM TO THE REQUIREMENTS OF AASHTO M291. BOLTS, NUTS AND WASHERS SHALL BE GALVANIZED. (AT THE CONTRACTOR'S OPTION, STAINLESS STEEL BOLTS, NUTS AND WASHERS MAY BE USED AS AN ALTERNATE FOR THE 7/8" Ø GALVANIZED BOLTS, NUTS AND WASHERS. THEY SHALL CONFORM TO OR EXCEED THE MECHANICAL REQUIREMENTS OF ASTM A307. THE USE OF THIS ALTERNATE SHALL BE APPROVED BY THE ENGINEER.)

THE GUARDRAIL ANCHOR ASSEMBLY IS REQUIRED AT ALL POINTS WHERE APPROACH GUARDRAIL IS TO BE ATTACHED TO THE END OF BARRIER RAIL. FOR POINTS OF ATTACHMENT, SEE SKETCH.

AFTER INSTALLATION, THE EXPOSED THREAD OF THE BOLT SHALL BE BURRED WITH A SHARP POINTED TOOL.

THE COST OF THE GUARDRAIL ANCHOR ASSEMBLY SHALL BE INCLUDED IN THE UNIT CONTRACT PRICE BID FOR VERTICAL CONCRETE BARRIER RAIL.

THE VERTICAL REINFORCING BARS MAY BE SHIFTED SLIGHTLY IN THE VERTICAL CONCRETE BARRIER RAIL TO CLEAR ASSEMBLY BOLTS.

THE 1 1/4" Ø HOLES SHALL BE FORMED OR DRILLED WITH A CORE BIT. IMPACT TOOLS WILL NOT BE PERMITTED. ANY CONCRETE DAMAGED BY THIS WORK SHALL BE REPAIRED TO THE SATISFACTION OF THE ENGINEER.

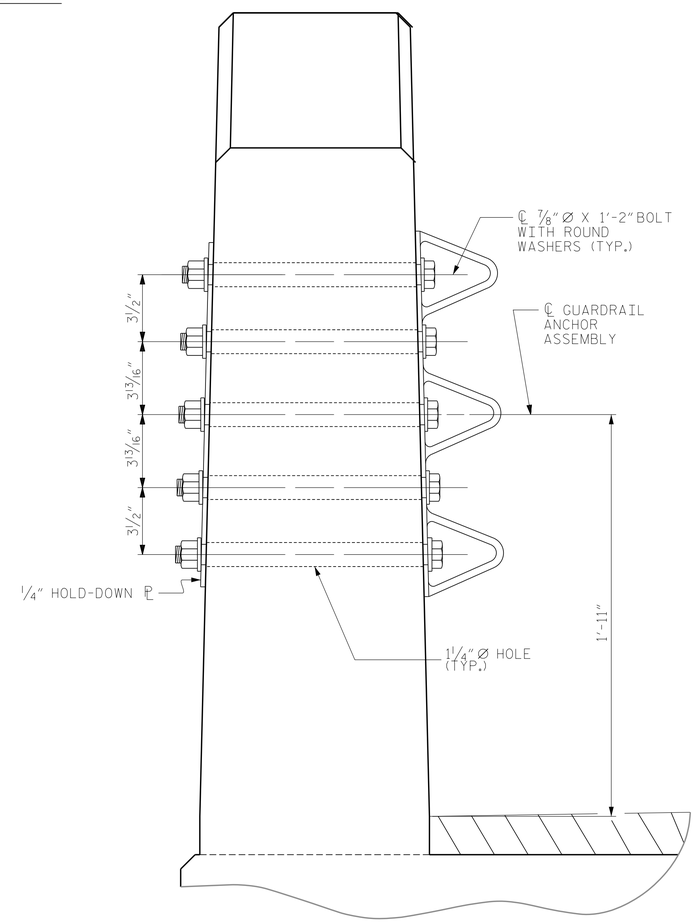

SECTION E-E

GUARDRAIL ANCHOR ASSEMBLY DETAILS

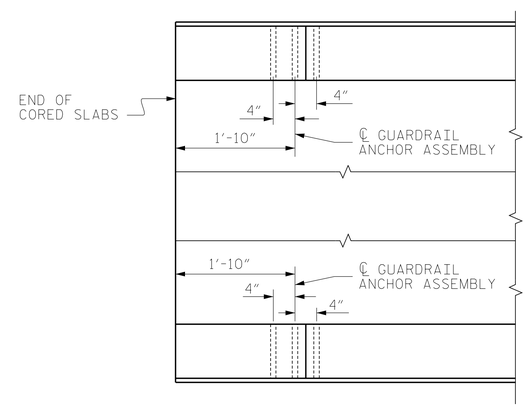

PLAN

LOCATION OF ANCHORS FOR GUARDRAIL

END BENT #1 SHOWN, END BENT #2 SIMILAR.

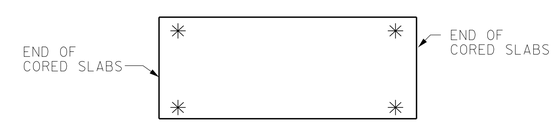

SKETCH SHOWING POINTS OF ATTACHMENT

✳ DENOTES GUARDRAIL ANCHOR ASSEMBLY

PROJECT NO. 17BP.14.R.136

TRANSYLVANIA COUNTY

STATION: 21+49.09 -L-

NORTH CAROLINA PROFESSIONAL SEAL ENGINEER 29777 HARDY WILLIS

DocuSigned by: Hardy Willis CC297FCF0223461...

10/30/2015

STATE OF NORTH CAROLINA
DEPARTMENT OF TRANSPORTATION
RALEIGH

STANDARD
GUARDRAIL ANCHORAGE FOR VERTICAL CONCRETE BARRIER RAIL

REVISIONS						SHEET NO.
NO.	BY:	DATE:	NO.	BY:	DATE:	S-37
1			3			TOTAL SHEETS
2			4			46

ASSEMBLED BY : AW		DATE : 01/14	
CHECKED BY : CBC		DATE : 01/14	
DRAWN BY : MAA 5/10	REV. 10/1/11	MAA/GM	
CHECKED BY : GM 5/10	REV. 12/5/11	MAA/GM	
	REV. 6/13	MAA/GM	

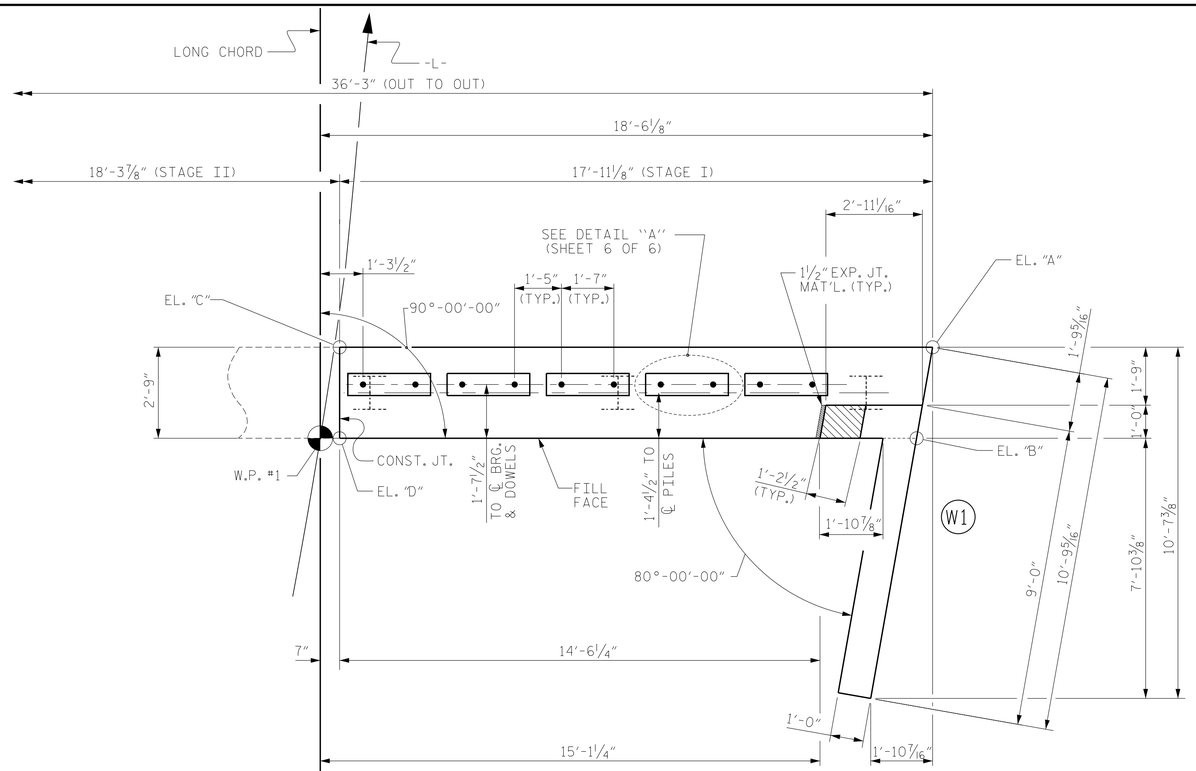

PLAN

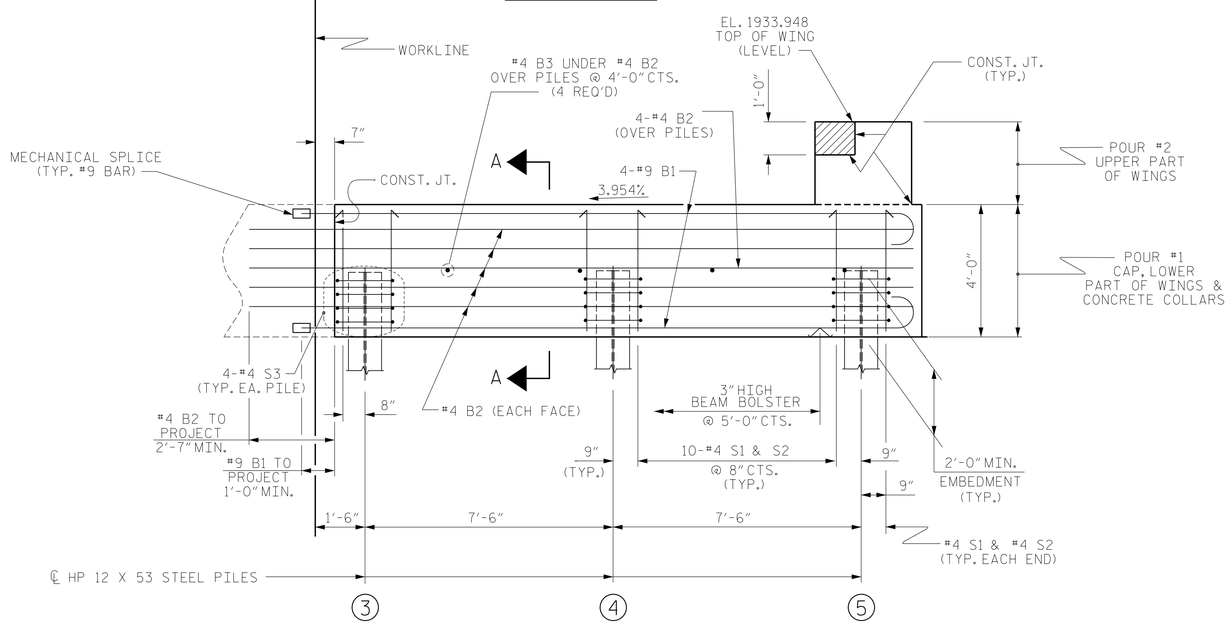

ELEVATION

WINGS NOT SHOWN FOR CLARITY.
FOR SECTION A-A, SEE SHEET 6 OF 6.
CONCRETE COLLARS FOR STEEL PILES NOT SHOWN IN PLAN AND ELEVATION VIEWS FOR CLARITY.
SEE "CORROSION PROTECTION FOR STEEL PILES DETAIL", SHEET 6 OF 6.

NOTES

STIRRUPS IN CAP MAY BE SHIFTED AS NECESSARY TO CLEAR DOWELS.

THE CONCRETE IN THE SHADED AREA OF THE WING SHALL BE POURED AFTER THE VERTICAL CONCRETE BARRIER RAIL IS CAST IF SLIP FORMING IS USED.

FOR PILE SPLICE DETAILS, SEE SHEET 6 OF 6.

FOR WING DETAILS, SEE SHEET 5 OF 6.

TOP OF CAP ELEVATIONS		BOTTOM OF CAP ELEVATIONS
A	1931.217	1927.217
B	1931.198	1927.198
C	1930.508	1926.508
D	1930.476	1926.476

TOP OF PILE ELEVATIONS	
3	1928.544
4	1928.840
5	1928.137

NORTH CAROLINA PROFESSIONAL SEAL ENGINEER L. HARDY WILLIS
DocuSigned by: Hardy Willis
C0267FCF022461...
10/30/2015

PROJECT NO. 17BP.14.R.136
TRANSYLVANIA COUNTY
STATION: 21+49.09 -L-

SHEET 1 OF 6

STATE OF NORTH CAROLINA
DEPARTMENT OF TRANSPORTATION
RALEIGH

SUBSTRUCTURE

END BENT No. 1
STAGE I

V&M Vaughn & Melton Consulting Engineers
Asheville, North Carolina 828-253-2796
Charlotte, North Carolina 704-357-0488
Tri-Cities, Tennessee 423-467-8401
Knoxville, Tennessee 865-546-5800
Middlesboro, Kentucky 606-248-6600
Spartanburg, South Carolina 864-574-4775
Copyright © 2006 Vaughn & Melton, Inc. All Rights Reserved

DWN. BY: AW DATE: 01/2014
CHKD. BY: HLW DATE: 01/2014
DES. EGR. OF RECORD: CBC DATE: 01/2014

REVISIONS							SHEET NO.
NO.	BY:	DATE:	NO.	BY:	DATE:		S-38
1			3				TOTAL SHEETS
2			4				46

STD. NO. EB_30_90S4

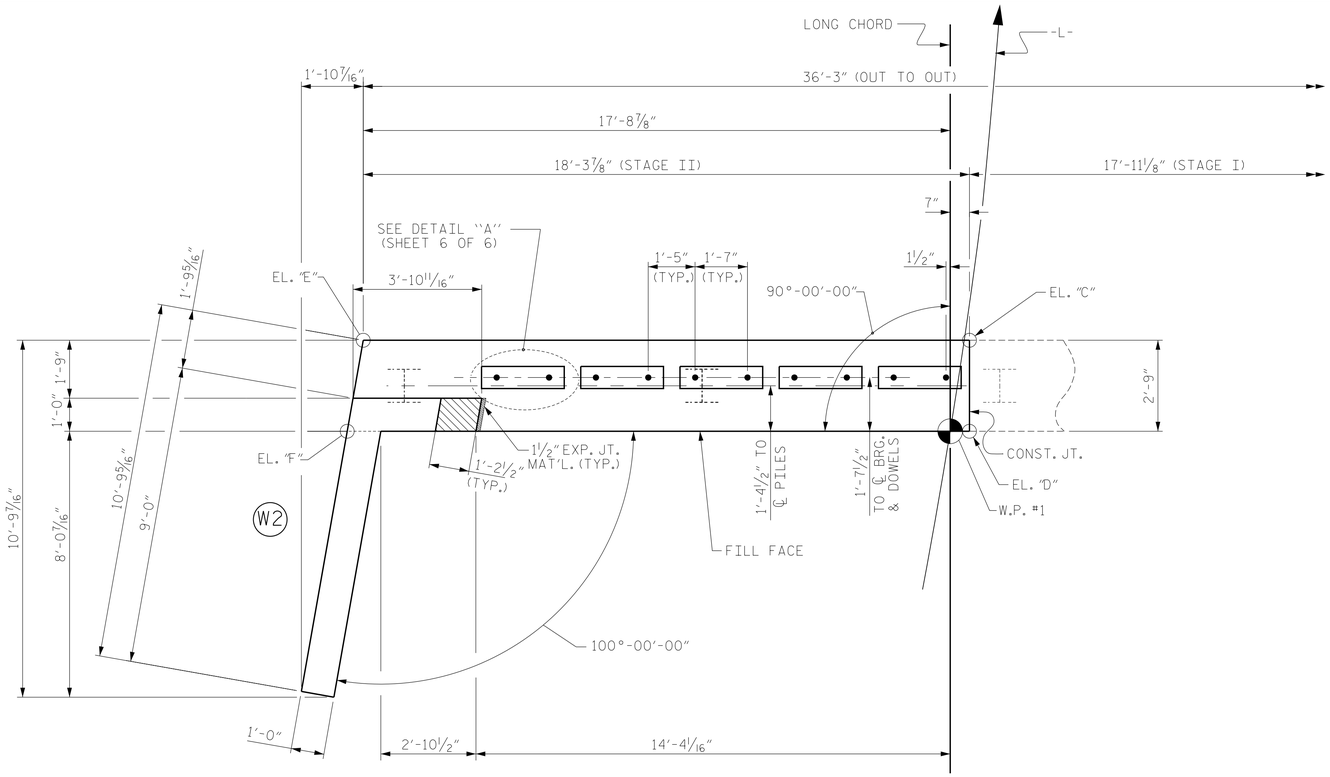

PLAN

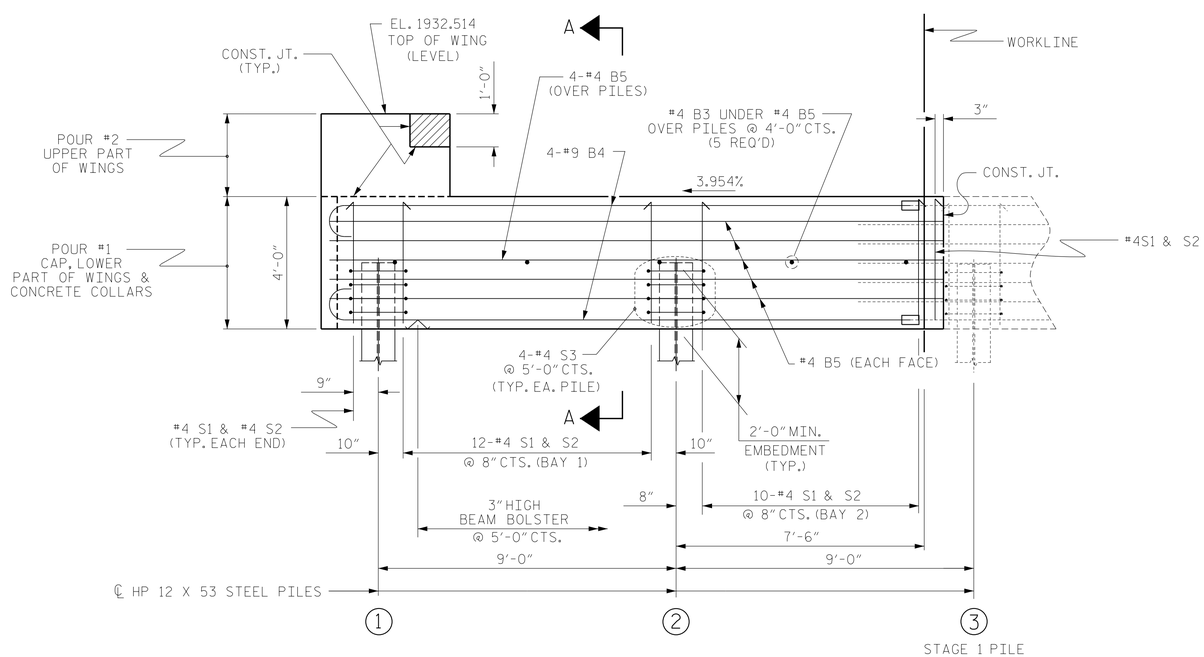

ELEVATION

WINGS NOT SHOWN FOR CLARITY.
FOR SECTION A-A, SEE SHEET 6 OF 6.
CONCRETE COLLARS FOR STEEL PILES NOT SHOWN IN PLAN AND ELEVATION VIEWS FOR CLARITY.
SEE "CORROSION PROTECTION FOR STEEL PILES DETAIL", SHEET 6 OF 6.

NOTES

STIRRUPS IN CAP MAY BE SHIFTED AS NECESSARY TO CLEAR DOWELS.

THE CONCRETE IN THE SHADED AREA OF THE WING SHALL BE POURED AFTER THE VERTICAL CONCRETE BARRIER RAIL IS CAST IF SLIP FORMING IS USED.

FOR PILE SPLICE DETAILS, SEE SHEET 6 OF 6.

FOR WING DETAILS, SEE SHEET 5 OF 6.

TOP OF CAP ELEVATIONS		BOTTOM OF CAP ELEVATIONS
C	1930.508	1926.508
D	1930.476	1926.476
E	1929.784	1925.784
F	1929.764	1925.764

TOP OF PILE ELEVATIONS	
1	1927.833
2	1928.189

NORTH CAROLINA PROFESSIONAL SEAL ENGINEER L. HARDY WILLIS
DocuSigned by: Hardy Willis
C1247FCF0223461...
10/30/2015

PROJECT NO. 17BP.14.R.136
TRANSYLVANIA COUNTY
STATION: 21+49.09 -L-

SHEET 2 OF 6

STATE OF NORTH CAROLINA
DEPARTMENT OF TRANSPORTATION
RALEIGH

SUBSTRUCTURE

END BENT No. 1
STAGE II

V&M Vaughn & Melton Consulting Engineers
Asheville, North Carolina 828-253-2796
Charlotte, North Carolina 704-357-0488
Tri-Cities, Tennessee 423-467-8401
Knoxville, Tennessee 865-546-5800
Middlesboro, Kentucky 606-248-6600
Spartanburg, South Carolina 864-574-4775
Copyright © 2006 Vaughn & Melton, Inc. All Rights Reserved

DWN. BY: AW DATE: 01/2014
CHKD. BY: HLW DATE: 01/2014
DES. EGR. OF RECORD: CBC DATE: 01/2014

REVISIONS						SHEET NO.
NO.	BY:	DATE:	NO.	BY:	DATE:	S-39
1			3			TOTAL SHEETS
2			4			46

STD. NO. EB_30_90S4

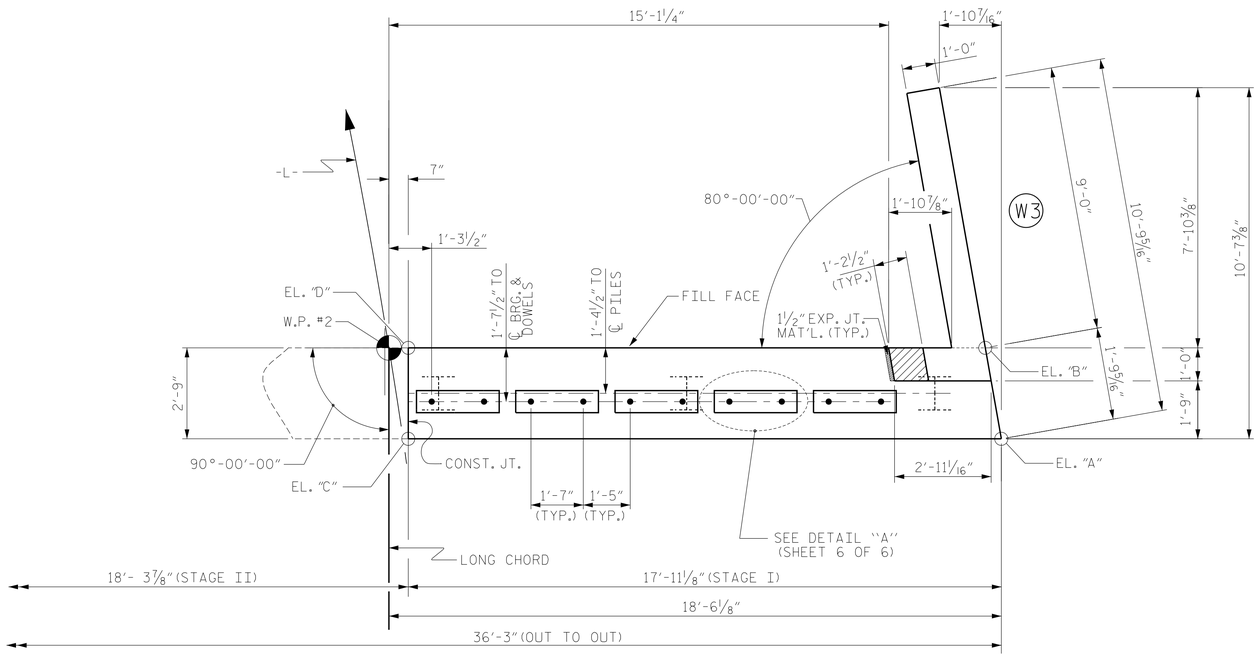

PLAN

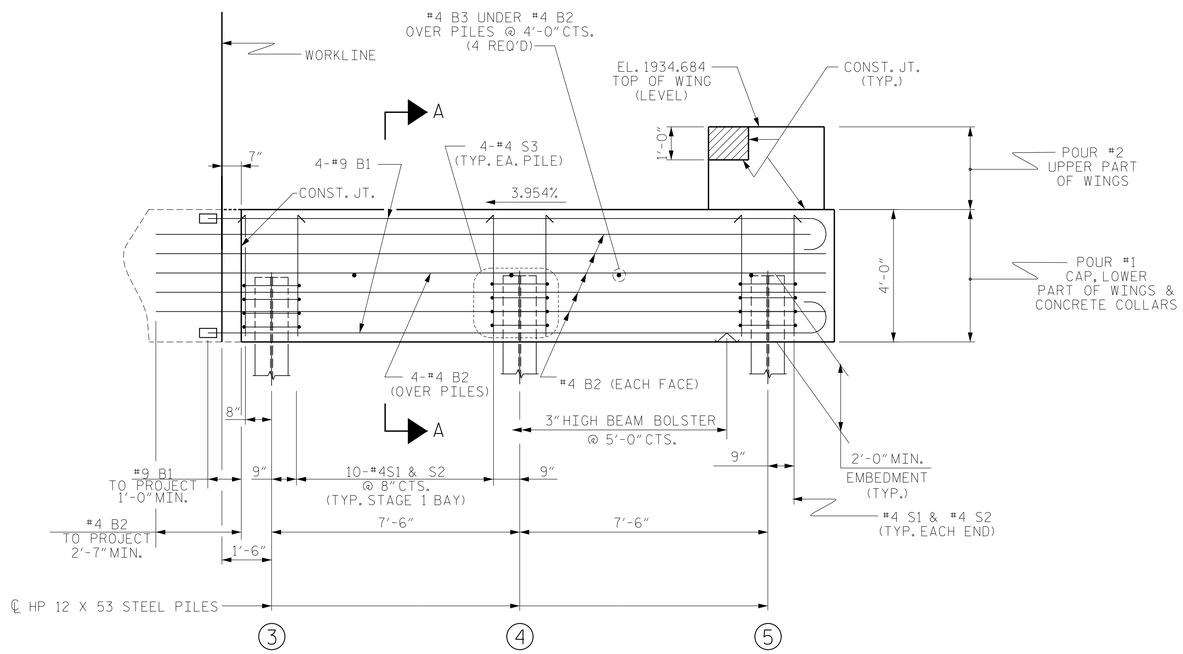

ELEVATION

WINGS NOT SHOWN FOR CLARITY.
FOR SECTION A-A, SEE SHEET 6 OF 6.
CONCRETE COLLARS FOR STEEL PILES NOT SHOWN IN PLAN AND ELEVATION VIEWS FOR CLARITY.
SEE "CORROSION PROTECTION FOR STEEL PILES DETAIL", SHEET 6 OF 6.

NOTES

STIRRUPS IN CAP MAY BE SHIFTED AS NECESSARY TO CLEAR DOWELS.

THE CONCRETE IN THE SHADED AREA OF THE WING SHALL BE POURED AFTER THE VERTICAL CONCRETE BARRIER RAIL IS CAST IF SLIP FORMING IS USED.

FOR PILE SPLICE DETAILS, SEE SHEET 6 OF 6.

FOR WING DETAILS, SEE SHEET 5 OF 6.

TOP OF CAP ELEVATIONS		BOTTOM OF CAP ELEVATIONS
A	1931.934	1927.934
B	1931.953	1927.953
C	1931.225	1927.225
D	1931.257	1927.257

TOP OF PILE ELEVATIONS	
3	1929.280
4	1929.577
5	1929.874

NORTH CAROLINA PROFESSIONAL SEAL 29111 ENGINEER HARDEY WILLIS JR.
DocuSigned by: Hardey Willis
CC287FCF0229461...
10/30/2015

PROJECT NO. 17BP.14.R.136
TRANSYLVANIA COUNTY
STATION: 21+49.09 -L-

SHEET 3 OF 6

STATE OF NORTH CAROLINA
DEPARTMENT OF TRANSPORTATION
RALEIGH

SUBSTRUCTURE

END BENT No. 2
STAGE I

V&M Vaughn & Melton Consulting Engineers
Asheville, North Carolina 828-253-2796
Charlotte, North Carolina 704-357-0488
Tri-Cities, Tennessee 423-467-840
Knoxville, Tennessee 865-546-5800
Middlesboro, Kentucky 606-248-6600
Spartanburg, South Carolina 864-574-4775
Copyright © 2006 Vaughn & Melton, Inc. All Rights Reserved

DWN. BY: AW DATE: 01/2014
CHKD. BY: HLW DATE: 01/2014
DES. EGR. OF RECORD: CBC DATE: 01/2014

REVISIONS						
NO.	BY:	DATE:	NO.	BY:	DATE:	
1			3			
2			4			

SHEET NO. S-40
TOTAL SHEETS 46

STD. NO. EB_30_90S4

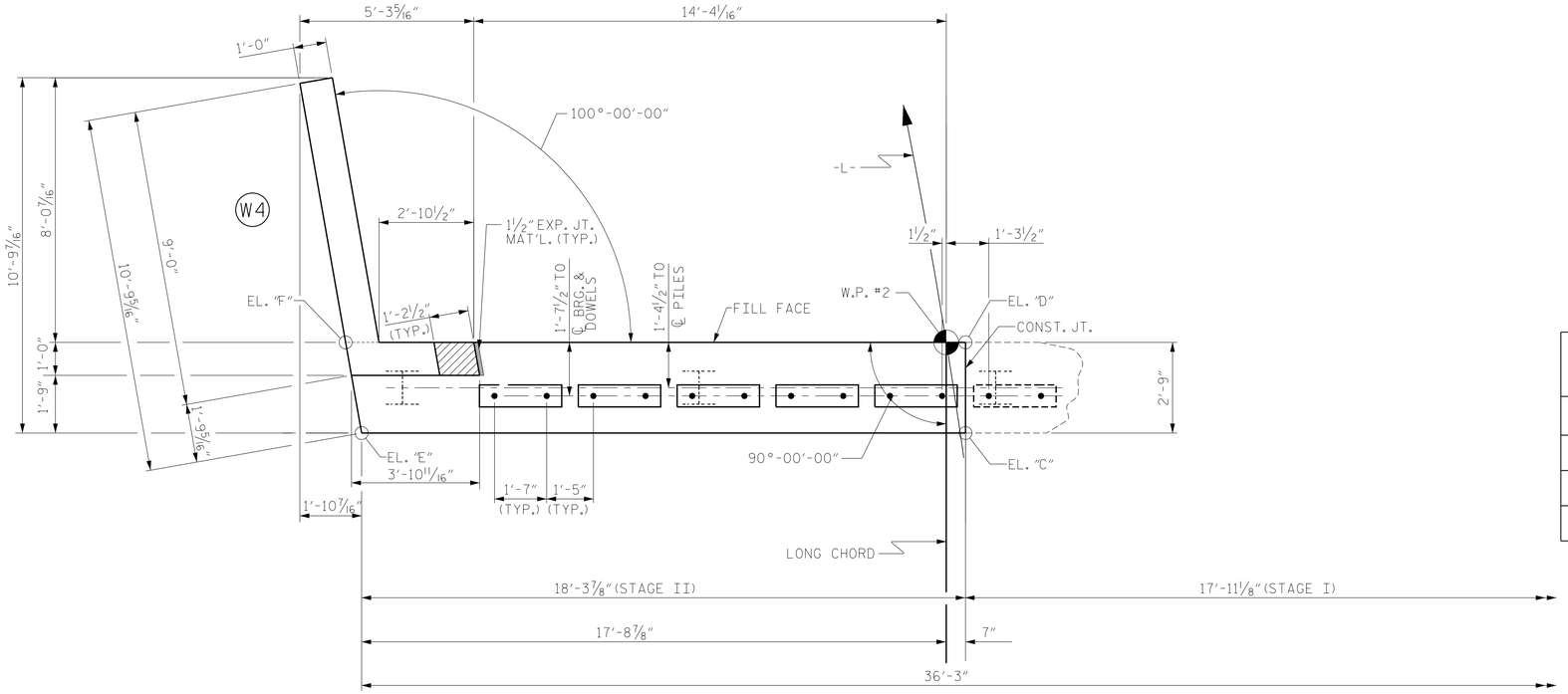

PLAN

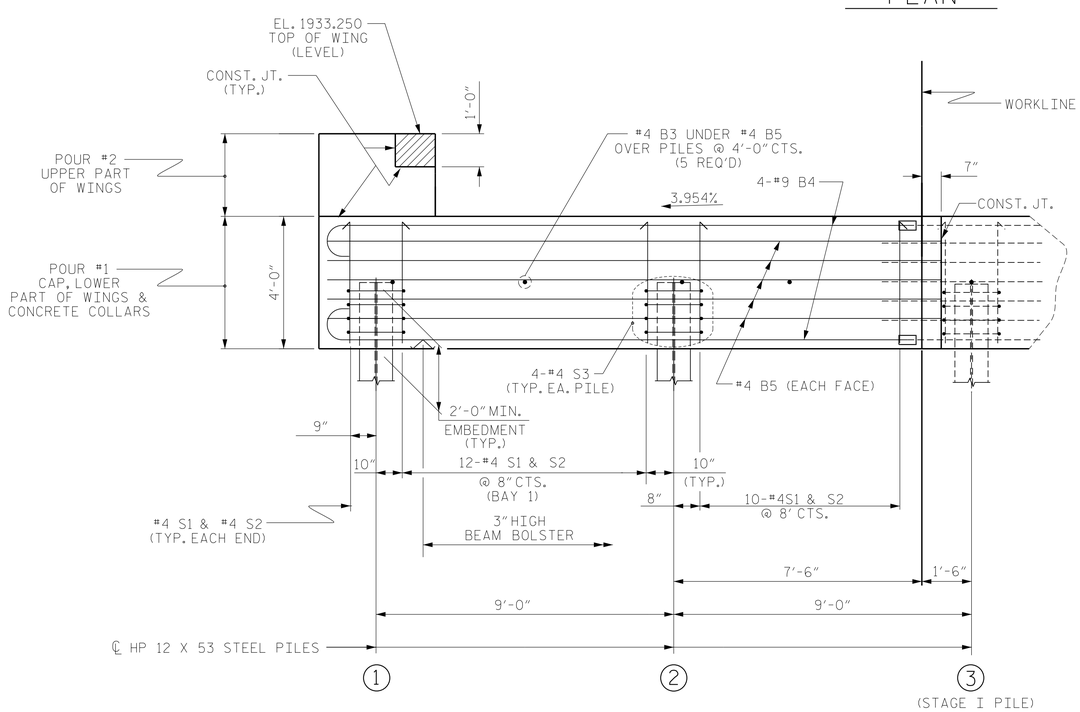

ELEVATION

WINGS NOT SHOWN FOR CLARITY.
FOR SECTION A-A, SEE SHEET 6 OF 6.
CONCRETE COLLARS FOR STEEL PILES NOT SHOWN IN PLAN AND ELEVATION VIEWS FOR CLARITY.
SEE "CORROSION PROTECTION FOR STEEL PILES DETAIL", SHEET 6 OF 6.

NOTES

STIRRUPS IN CAP MAY BE SHIFTED AS NECESSARY TO CLEAR DOWELS.

THE CONCRETE IN THE SHADED AREA OF THE WING SHALL BE POURED AFTER THE VERTICAL CONCRETE BARRIER RAIL IS CAST IF SLIP FORMING IS USED.

FOR PILE SPLICE DETAILS, SEE SHEET 6 OF 6.

FOR WING DETAILS, SEE SHEET 5 OF 6.

TOP OF CAP ELEVATIONS		BOTTOM OF CAP ELEVATIONS
C	1931.225	1927.225
D	1931.257	1927.257
E	1930.501	1926.501
F	1930.521	1926.521

TOP OF PILE ELEVATIONS	
1	1928.569
2	1928.925

NORTH CAROLINA PROFESSIONAL SEAL 077 ENGINEER HARDY L. WILLIS
DocuSigned by: Hardy Willis
CC2874C7D223463...
10/30/2015

PROJECT NO. 17BP.14.R.136
TRANSYLVANIA COUNTY
STATION: 21+49.09 -L-

SHEET 4 OF 6

STATE OF NORTH CAROLINA
DEPARTMENT OF TRANSPORTATION
RALEIGH

SUBSTRUCTURE

END BENT No. 2
STAGE II

V&M Vaughn & Melton Consulting Engineers
Asheville, North Carolina 828-253-2796
Charlotte, North Carolina 704-357-0488
Tri-Cities, Tennessee 423-467-840
Knoxville, Tennessee 865-546-5800
Middlesboro, Kentucky 606-248-6600
Spartanburg, South Carolina 864-574-4775
Copyright © 2006 Vaughn & Melton, Inc. All Rights Reserved

DWN. BY: AW DATE: 01/2014
CHKD. BY: HLW DATE: 01/2014
DES. EGR. OF RECORD: CBC DATE: 01/2014

REVISIONS						
NO.	BY:	DATE:	NO.	BY:	DATE:	
1			3			
2			4			

SHEET NO. S-41
TOTAL SHEETS 46

STD. NO. EB_30_90S4

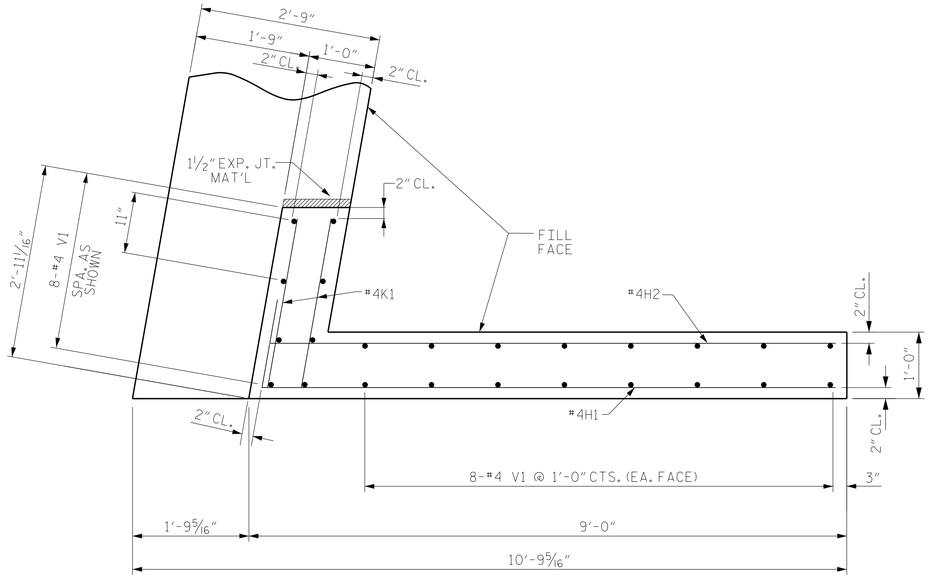

PLAN OF WING (W1)

NOTE: W3 OPPOSITE HAND

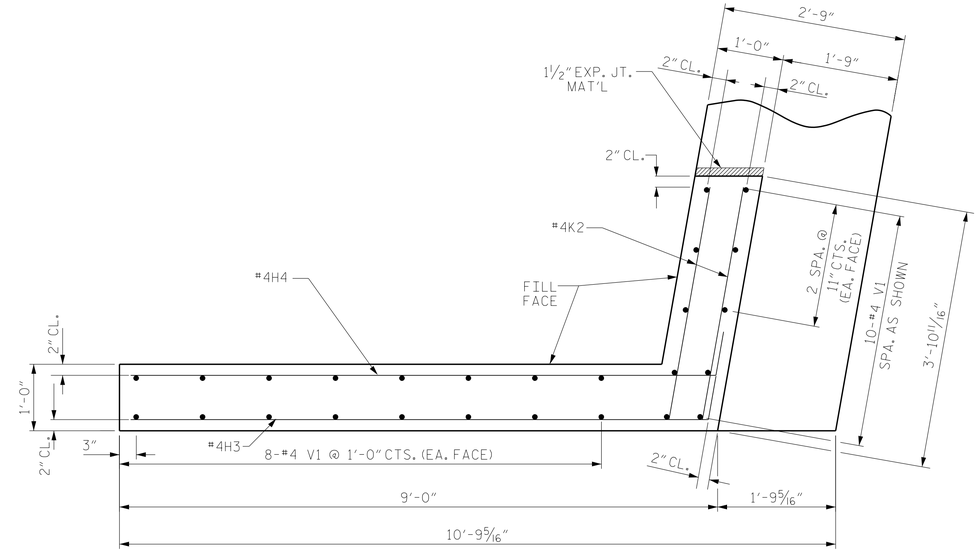

PLAN OF WING (W2)

NOTE: W4 OPPOSITE HAND

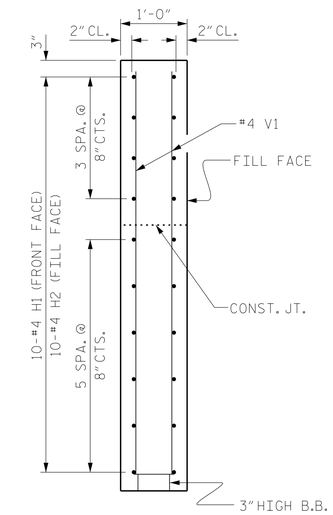

SECTION X-X

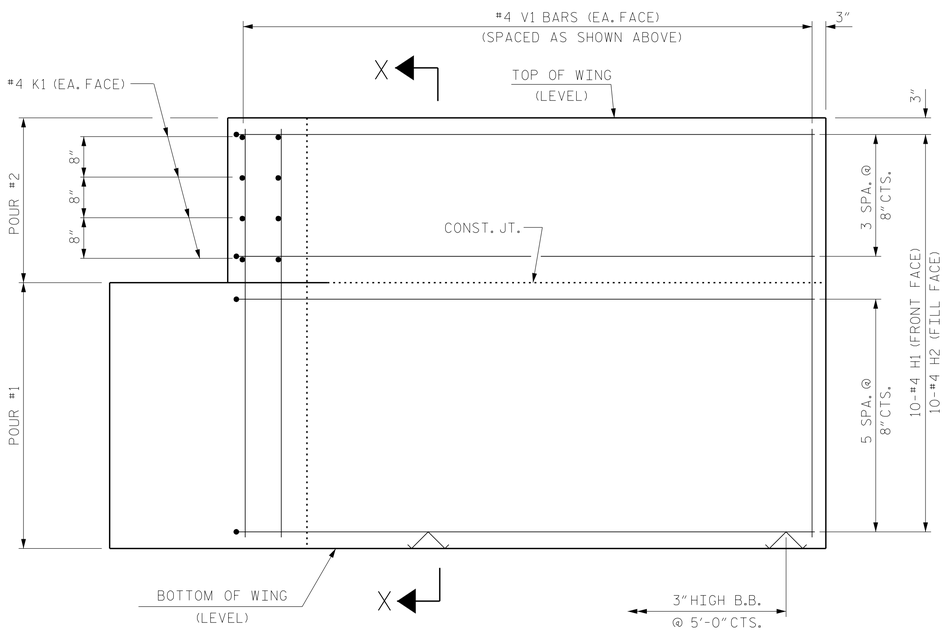

ELEVATION OF WING (W1)

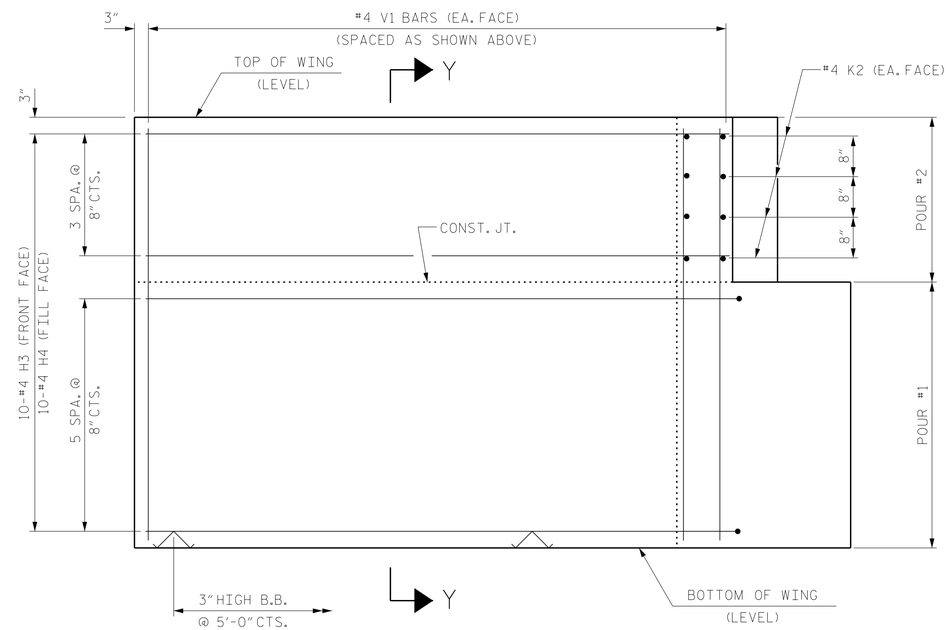

ELEVATION OF WING (W2)

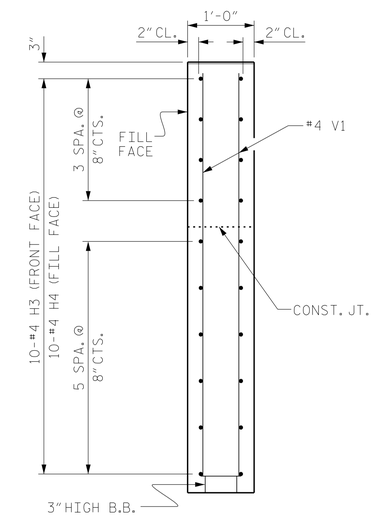

SECTION Y-Y

WING DETAILS

PROJECT NO. 17BP.14.R.136

TRANSYLVANIA COUNTY

STATION: 21+49.09 -L-

SHEET 5 OF 6

STATE OF NORTH CAROLINA
DEPARTMENT OF TRANSPORTATION
RALEIGH

SUBSTRUCTURE

END BENT
WING DETAILS

NORTH CAROLINA PROFESSIONAL SEAL 026461 ENGINEER HARDY L. WILLIS

DocuSigned by: Hardy Willis
5C9B7A1A4D22481...
10/30/2015

V&M
Vaughn & Melton
Consulting Engineers
Asheville, North Carolina 828-253-2796
Charlotte, North Carolina 704-357-0488
Tri-Cities, Tennessee 423-467-8401
Knoxville, Tennessee 865-546-5800
Middlesboro, Kentucky 606-248-6600
Spartanburg, South Carolina 864-574-4775

Copyright © 2006 Vaughn & Melton, Inc. All Rights Reserved

DWN. BY: AW	DATE: 01/2014	
CHKD. BY: HLW	DATE: 01/2014	
DES. EGR. OF RECORD: CBC	DATE: 01/2014	

REVISIONS							
NO.	BY:	DATE:	NO.	BY:	DATE:	SHEET NO.	S-42
1			3			TOTAL SHEETS	46
2			4				

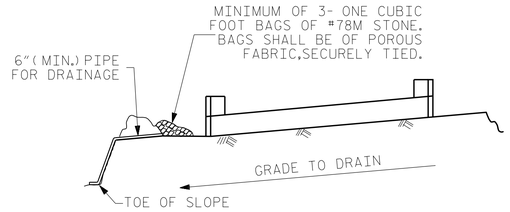

BAGGED STONE AND PIPE SHALL BE PLACED IMMEDIATELY AFTER COMPLETION OF END BENT EXCAVATION. PIPE MAY BE EITHER CONCRETE, CORRUGATED STEEL, CORRUGATED ALUMINUM ALLOY, OR CORRUGATED PLASTIC. PERFORATED PIPE WILL NOT BE ALLOWED.

BAGGED STONE SHALL REMAIN IN PLACE UNTIL THE ENGINEER DIRECTS THAT IT BE REMOVED. THE CONTRACTOR SHALL REMOVE AND DISPOSE OF SILT ACCUMULATIONS AT BAGGED STONE WHEN SO DIRECTED BY THE ENGINEER. BAGS SHALL BE REMOVED AND REPLACED WHENEVER THE ENGINEER DETERMINES THAT THEY HAVE DETERIORATED AND LOST THEIR EFFECTIVENESS.

NO SEPARATE PAYMENT WILL BE MADE FOR THIS WORK AND THE ENTIRE COST OF THIS WORK SHALL BE INCLUDED IN THE UNIT CONTRACT PRICE BID FOR THE SEVERAL PAY ITEMS.

TEMPORARY DRAINAGE AT END BENT

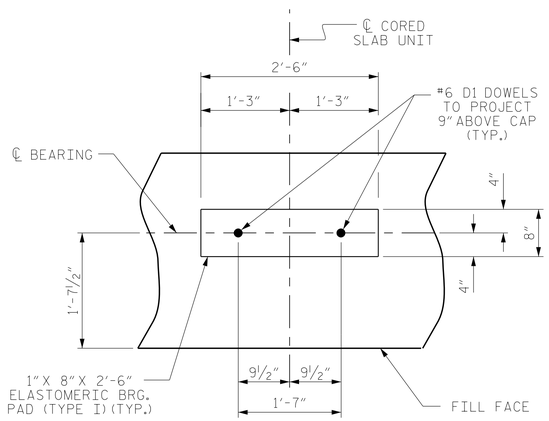

DETAIL "A"

(END BENT No. 1 SHOWN, END BENT No. 2 SIMILAR BY ROTATION)

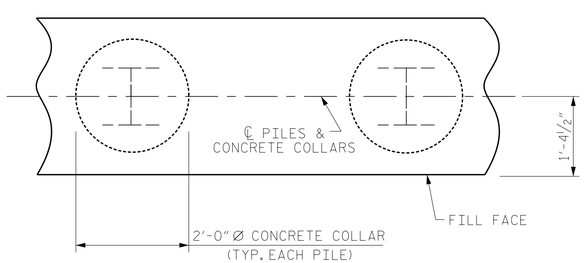

PLAN

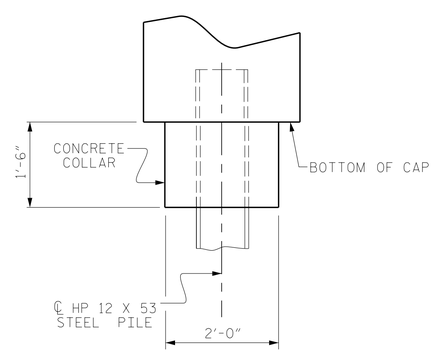

ELEVATION

CORROSION PROTECTION FOR STEEL PILES DETAIL

(END BENT No. 1 SHOWN, END BENT No. 2 SIMILAR BY ROTATION)

BAR TYPES

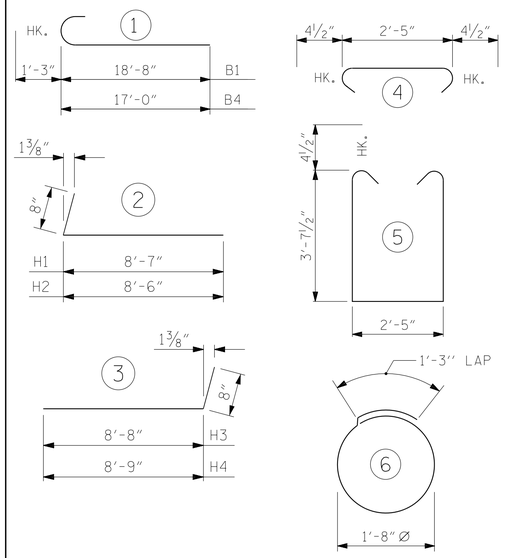

ALL BAR DIMENSIONS ARE OUT TO OUT.

END BENT No. 1	END BENT No. 2
HP 12 X 53 STEEL PILES	HP 12 X 53 STEEL PILES
NO: 5 LIN. FT.= 75	NO: 5 LIN. FT.= 75
PILE EXCAVATION	PILE EXCAVATION
IN SOIL: 24 LIN. FT.	IN SOIL: 36 LIN. FT.
NOT IN SOIL: 27 LIN. FT	NOT IN SOIL: 15 LIN. FT

BILL OF MATERIAL FOR ONE END BENT

STAGE I

BAR	NO.	SIZE	TYPE	LENGTH	WEIGHT
B1	8	#9	1	19'-11"	542
B2	14	#4	STR	20'-3"	189
B3	4	#4	STR	2'-5"	6
D1	10	#6	STR	1'-6"	23
H1	10	#4	2	9'-3"	62
H2	10	#4	2	9'-2"	61
K1	8	#4	STR	2'-7"	14
S1	22	#4	4	3'-2"	47
S2	22	#4	5	10'-5"	153
S3	12	#4	6	6'-6"	52
V1	24	#4	STR	6'-5"	103

REINFORCING STEEL (FOR ONE END BENT, STAGE I) 1252 LBS.

CLASS A CONCRETE BREAKDOWN (FOR ONE END BENT, STAGE I)

POUR #1 CAP, LOWER PART OF WINGS & COLLARS 9.2 C.Y.

POUR #2 UPPER PART OF WINGS 1.1 C.Y.

TOTAL CLASS A CONCRETE (STAGE I) 10.3 C.Y.

STAGE II

BAR	NO.	SIZE	TYPE	LENGTH	WEIGHT
B3	5	#4	STR	2'-5"	8
B4	8	#9	1	18'-3"	496
B5	14	#4	STR	17'-9"	166
D1	10	#6	STR	1'-6"	23
H3	10	#4	3	9'-4"	62
H4	10	#4	3	9'-5"	63
K2	8	#4	STR	3'-6"	19
S1	24	#4	4	3'-2"	51
S2	24	#4	5	10'-5"	167
S3	8	#4	6	6'-6"	35
V1	26	#4	STR	6'-5"	111

REINFORCING STEEL (FOR ONE END BENT, STAGE II) 1201 LBS.

CLASS A CONCRETE BREAKDOWN (FOR ONE END BENT, STAGE II)

POUR #1 CAP, LOWER PART OF WINGS & COLLARS 9.5 C.Y.

POUR #2 UPPER PART OF WINGS 1.2 C.Y.

TOTAL CLASS A CONCRETE (STAGE II) 10.7 C.Y.

TOTAL BILL OF MATERIAL

	CLASS A CONC. CU. YDS.	REINF. STEEL LBS.	HP 12x53 STEEL PILES NO.	HP 12x53 STEEL PILES LIN. FT.
END BENT NO. 1	21.0	2453	5	75
END BENT NO. 2	21.0	2453	5	75
TOTAL	42.0	4906	10	150

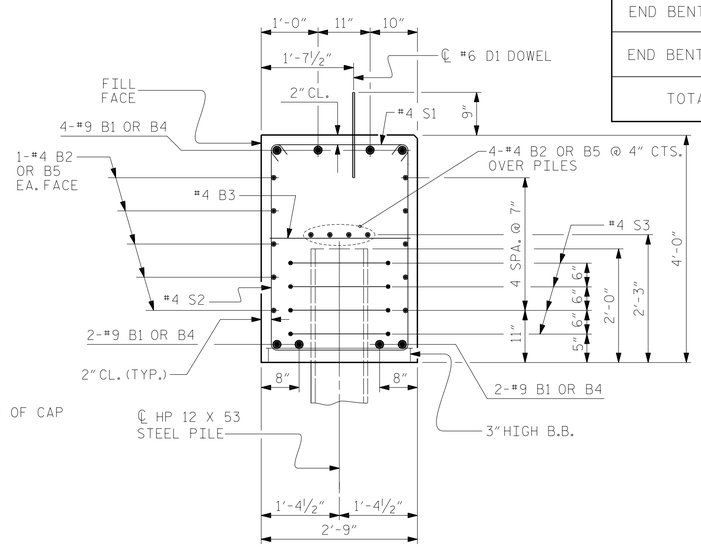

SECTION A-A

(CONCRETE COLLAR NOT SHOWN FOR CLARITY. SEE "CORROSION PROTECTION FOR STEEL PILES DETAIL.")

DocuSigned by: Hardy Wilkins
C287E6D922483...
10/30/2015

PROJECT NO. 17BP.14.R.136

TRANSYLVANIA COUNTY

STATION: 21+49.09 -L-

SHEET 6 OF 6

V&M Vaughn & Melton Consulting Engineers
Asheville, North Carolina 828-253-2796
Charlotte, North Carolina 704-357-0488
Tri-Cities, Tennessee 423-467-840
Knoxville, Tennessee 865-546-5800
Middlesboro, Kentucky 606-248-6600
Spartanburg, South Carolina 864-574-4775
Copyright © 2006 Vaughn & Melton, Inc. All Rights Reserved

STATE OF NORTH CAROLINA
DEPARTMENT OF TRANSPORTATION
RALEIGH

SUBSTRUCTURE

END BENT No. 1 & 2 DETAILS

DWN. BY: AW DATE: 01/2014
CHKD. BY: HLW DATE: 01/2014
DES. EGR. OF RECORD: CBC DATE: 01/2014

REVISIONS

NO.	BY:	DATE:	NO.	BY:	DATE:
1			3		
2			4		

SHEET NO. S-43

TOTAL SHEETS 46

STD. NO. EB_30_90S4

NOTES :

FOR BERM WIDTH DIMENSIONS, SEE GENERAL DRAWING.

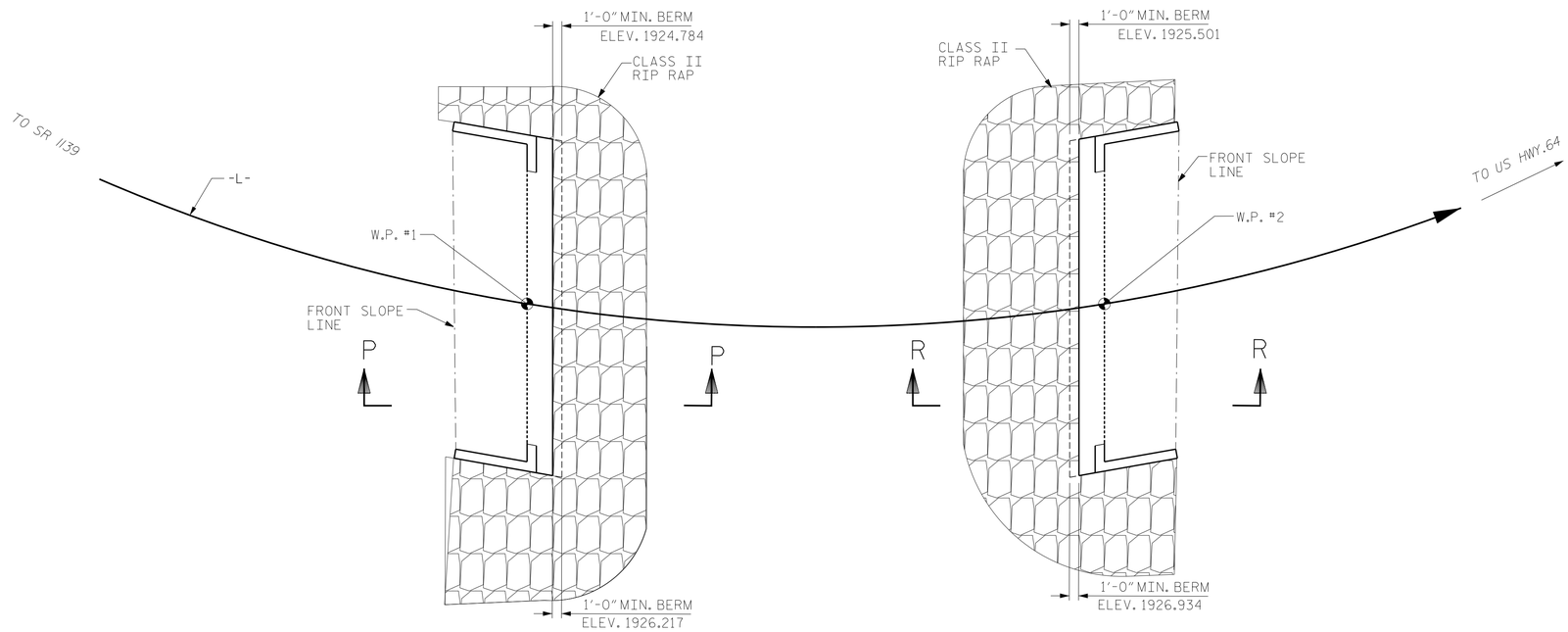

END BENT NO. 1

END BENT NO. 2

PLAN

ESTIMATED QUANTITIES		
BRIDGE @ STA. 21+49.09	RIP RAP CLASS II (2'-0" THICK)	GEOTEXTILE FOR DRAINAGE
	TONS	SQUARE YARDS
END BENT 1	108	122
END BENT 2	109	123

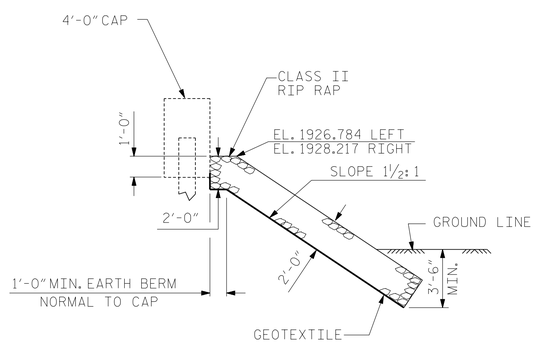

SECTION P-P

BERM RIP RAPPED

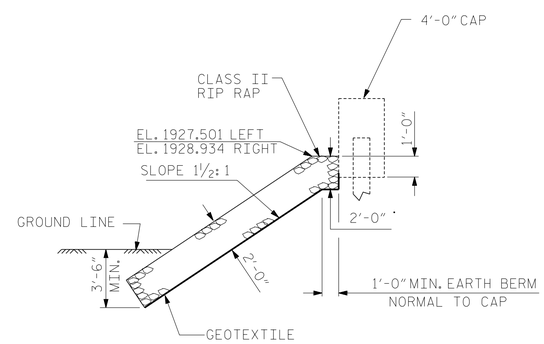

SECTION R-R

BERM RIP RAPPED

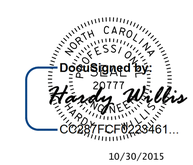

PROJECT NO. 17BP.14.R.136

TRANSYLVANIA COUNTY

STATION: 21+49.09 -L-

STATE OF NORTH CAROLINA
DEPARTMENT OF TRANSPORTATION
RALEIGH

RIP RAP DETAILS

ASSEMBLED BY : AW	DATE : 01/14
CHECKED BY : CBC	DATE : 01/14
DRAWN BY : REK 1/84	REV. 5/1/06R TLA/GM
CHECKED BY : RDU 1/84	REV. 10/1/11 MAA/GM
	REV. 12/21/11 MAA/GM

REVISIONS						SHEET NO.
NO.	BY:	DATE:	NO.	BY:	DATE:	S-44
1			3			TOTAL SHEETS
2			4			46

STD. NO. RR1 (Sht 2)

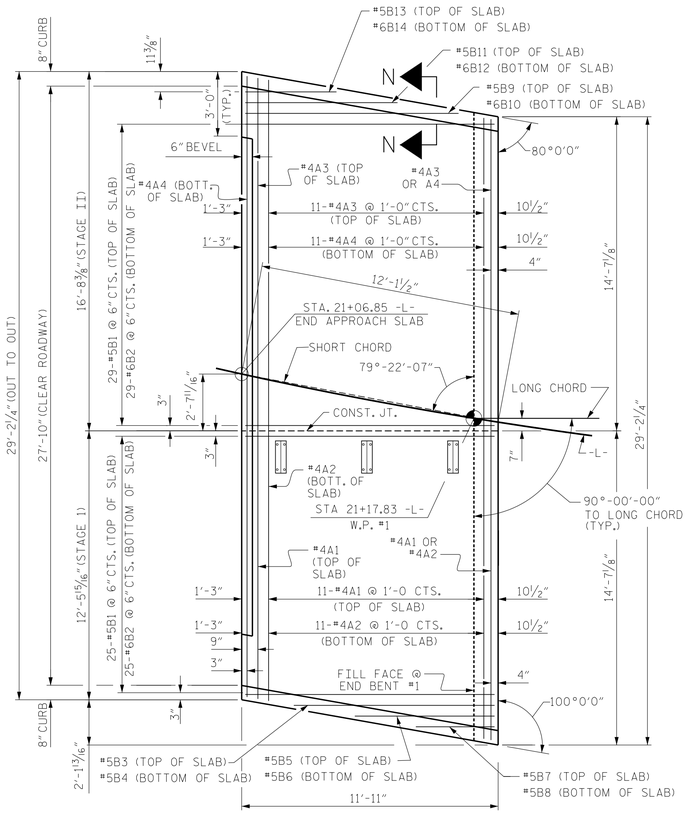

PLAN @ END BENT #1

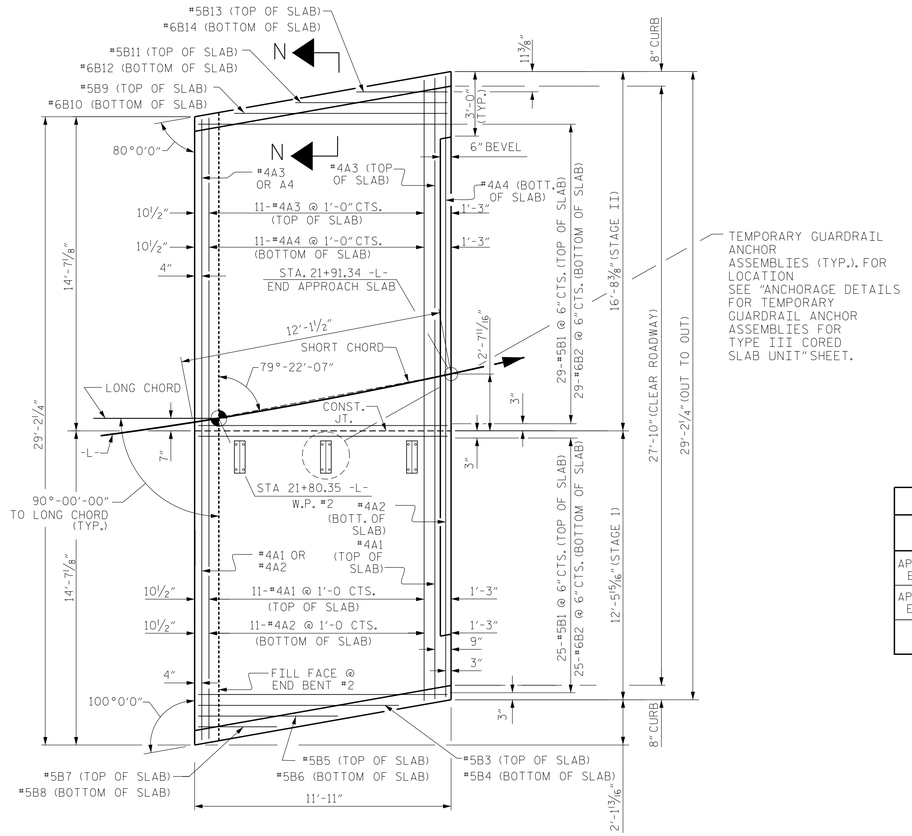

PLAN @ END BENT #2

DIMENSIONS SHOWN ARE TYPICAL FOR BOTH APPROACH SLABS

TEMPORARY GUARDRAIL ANCHOR ASSEMBLIES (TYP.). FOR LOCATION SEE "ANCHORAGE DETAILS FOR TEMPORARY GUARDRAIL ANCHOR ASSEMBLIES FOR TYPE III CORED SLAB UNIT" SHEET.

BILL OF MATERIAL FOR ONE APPROACH SLAB

STAGE I						STAGE II					
BAR	NO.	SIZE	TYPE	LENGTH	WEIGHT	BAR	NO.	SIZE	TYPE	LENGTH	WEIGHT
* A1	13	#4	STR	16'-7"	144	* A3	13	#4	STR	14'-3"	124
A2	13	#4	STR	16'-4"	142	A4	13	#4	STR	14'-3"	124
* B1	25	#5	STR	11'-1"	289	* B1	29	#5	STR	11'-1"	335
B2	25	#6	STR	11'-7"	435	B2	29	#6	STR	11'-7"	505
* B3	1	#5	STR	9'-3"	10	* B9	1	#5	STR	9'-10"	10
B4	1	#6	STR	9'-3"	14	B10	1	#6	STR	9'-10"	15
* B5	1	#5	STR	6'-5"	7	* B11	1	#5	STR	7'-0"	7
B6	1	#6	STR	6'-5"	10	B12	1	#6	STR	7'-0"	11
* B7	1	#5	STR	3'-7"	4	* B13	1	#5	STR	4'-2"	4
B8	1	#6	STR	3'-7"	5	B14	1	#6	STR	4'-2"	6
REINFORCING STEEL					606 LBS.	REINFORCING STEEL					661 LBS.
* EPOXY COATED REINFORCING STEEL					454 LBS.	* EPOXY COATED REINFORCING STEEL					480 LBS.
CLASS AA CONCRETE					7.7 C.Y.	CLASS AA CONCRETE					8.8 C.Y.

TOTAL BILL OF MATERIAL

	CLASS AA CONC. CU. YDS.	REINF. STEEL LBS.	EPOXY COATED REINF. STEEL LBS.
APPROACH SLAB @ END BENT NO. 1	16.5	1267	934
APPROACH SLAB @ END BENT NO. 2	16.5	1267	934
TOTAL	33.0	2534	1868

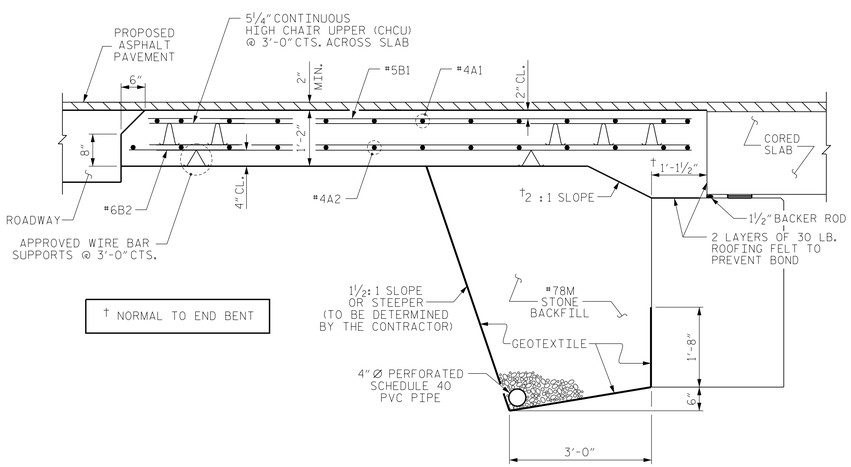

SECTION THRU SLAB

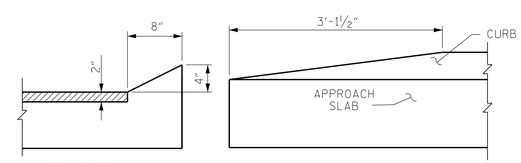

SECTION N-N

END OF CURB WITHOUT SHOULDER BERM GUTTER

CURB DETAILS

SPLICE LENGTHS		
BAR SIZE	EPOXY COATED	UNCOATED
#4	2'-0"	1'-9"
#5	2'-6"	2'-2"
#6	3'-10"	2'-7"

NORTH CAROLINA PROFESSIONAL SEAL ENGINEER

Docusigned by: Hardy Willis CC2B7BCFD22A4A4...

10/30/2015

PROJECT NO. 17BP.14.R.136

TRANSYLVANIA COUNTY

STATION: 21+49.09 -L-

SHEET 1 OF 2

STATE OF NORTH CAROLINA
DEPARTMENT OF TRANSPORTATION
RALEIGH

BRIDGE APPROACH SLAB FOR PRESTRESSED CONCRETE CORED SLAB UNIT (SUB-REGIONAL TIER) 90° SKEW

REVISIONS						SHEET NO.
NO.	BY:	DATE:	NO.	BY:	DATE:	S-45
1			3			TOTAL SHEETS
2			4			46

ASSEMBLED BY :	AW	DATE :	01/14
CHECKED BY :	CBC	DATE :	01/14
DRAWN BY : SHS/MAA	5-09	REV. 12-11	MAA/AAC
CHECKED BY : BCH	5-09		

STD. NO. BAS_30_90S

NOTES

FOR BRIDGE APPROACH FILL INCLUDING GEOTEXTILE, 4"Ø DRAINAGE PIPE, AND #78M STONE BACKFILL, SEE ROADWAY PLANS.

GEOTEXTILE SHALL BE TYPE 1IN ACCORDANCE WITH THE STANDARD SPECIFICATIONS SECTION 1056.

#78M STONE BACKFILL (CLASS V SELECT MATERIAL) SHALL BE IN ACCORDANCE WITH STANDARD SPECIFICATIONS SECTION 1016.

#78M STONE BACKFILL IS TO BE CONTINUOUS ALONG FILL FACE OF BACKWALL FROM OUTSIDE EDGE TO OUTSIDE EDGE OF APPROACH SLAB.

FOR THE 4"Ø DRAINAGE PIPE OUTLET(S), SEE ROADWAY STANDARD DRAWINGS.

AREA BETWEEN THE WINGWALL AND APPROACH SLAB SHALL BE GRADED TO DRAIN THE WATER AWAY FROM THE FILL FACE OF THE BRIDGE AND SHALL BE PAVED. SEE ROADWAY PLANS.

APPROACH SLAB GROOVING IS NOT REQUIRED.

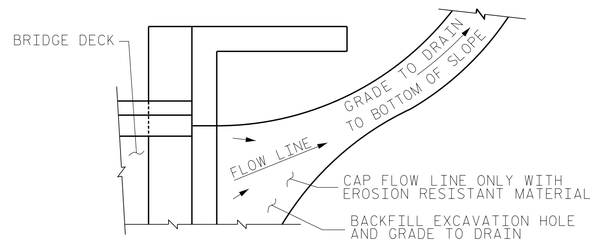

NOTE: IF THE APPROACH SLAB IS NOT CONSTRUCTED IMMEDIATELY AFTER THE BACKFILLING OF THE END BENT EXCAVATION, GRADE TO DRAIN TO THE BOTTOM OF THE SLOPE AND PROVIDE EROSION RESISTANT MATERIAL, SUCH AS FIBERGLASS ROVING OR AS DIRECTED BY THE ENGINEER TO PREVENT SOIL EROSION AND TO PROTECT THE AREA ADJACENT TO THE STRUCTURE. THE CONTRACTOR WILL BE REQUIRED TO REMOVE THESE MATERIALS PRIOR TO CONSTRUCTION OF THE APPROACH SLAB.

TEMPORARY DRAINAGE DETAIL

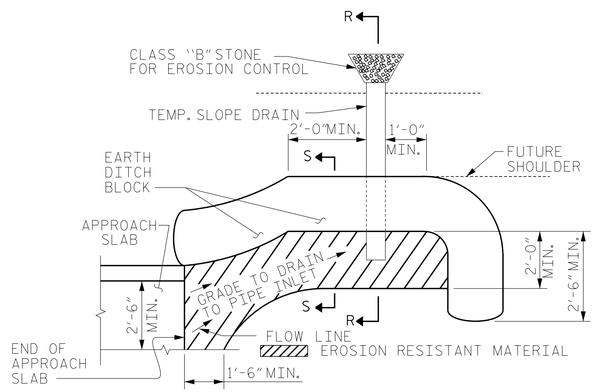

NOTE: IMMEDIATELY AFTER THE CONSTRUCTION OF THE APPROACH SLAB, THE CONTRACTOR SHALL PROVIDE TEMPORARY BERM AND SLOPE DRAIN. CONTRACTOR SHALL GRADE TO PIPE INLET AND PROVIDE EROSION RESISTANT MATERIAL AS SHOWN. THE EROSION RESISTANT MATERIAL SHALL BE EITHER 1) ASPHALT PLANT MIX, TYPE 1 OR TYPE 2, MIN. 2" DEPTH, 2) EROSION CONTROL MAT, OR 3) CONCRETE, AS DIRECTED BY THE ENGINEER. THE SLOPE DRAIN SHALL CONSIST OF A NON-PERFORATED TEMPORARY DRAINAGE PIPE, 12 INCHES IN DIAMETER.

PLAN VIEW

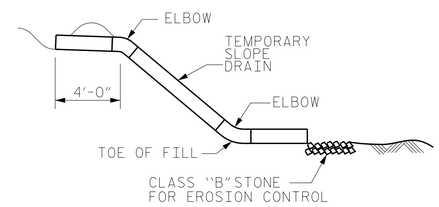

SECTION R-R

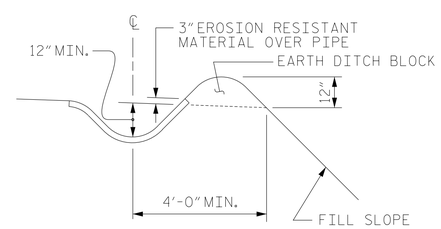

SECTION S-S

TEMPORARY BERM AND SLOPE DRAIN DETAILS

(TO BE USED WHEN SHOULDER BERM GUTTER IS REQUIRED)

DocuSigned by: Hardy Willis
C0287FC0F0223461...
10/30/2015

PROJECT NO. 17BP.14.R.136

TRANSYLVANIA COUNTY

STATION: 21+49.09 -L-

SHEET 2 OF 2

STATE OF NORTH CAROLINA
DEPARTMENT OF TRANSPORTATION
RALEIGH

BRIDGE APPROACH SLAB
FOR PRESTRESSED CONCRETE
CORED SLAB UNIT
(SUB-REGIONAL TIER)
90° SKEW

REVISIONS						SHEET NO.
NO.	BY:	DATE:	NO.	BY:	DATE:	S-46
1			3			TOTAL SHEETS
2			4			46

ASSEMBLED BY : AW		DATE : 01/14	
CHECKED BY : CBC		DATE : 01/14	
DRAWN BY : SHS/MAA 5-09	REV. 12-11	MAA/AAC	
CHECKED BY : BCH 5-09			

STD. NO. BAS_36_105S

GEOTECHNICAL ENGINEER	STRUCTURAL ENGINEER

NOTE:

○ NUMBER IN CIRCLE DENOTES PILE DESIGNATION.

□ NUMBER IN SQUARE DENOTES PANEL DESIGNATION.

SEE SHEET S-3 FOR PANEL DETAILS.

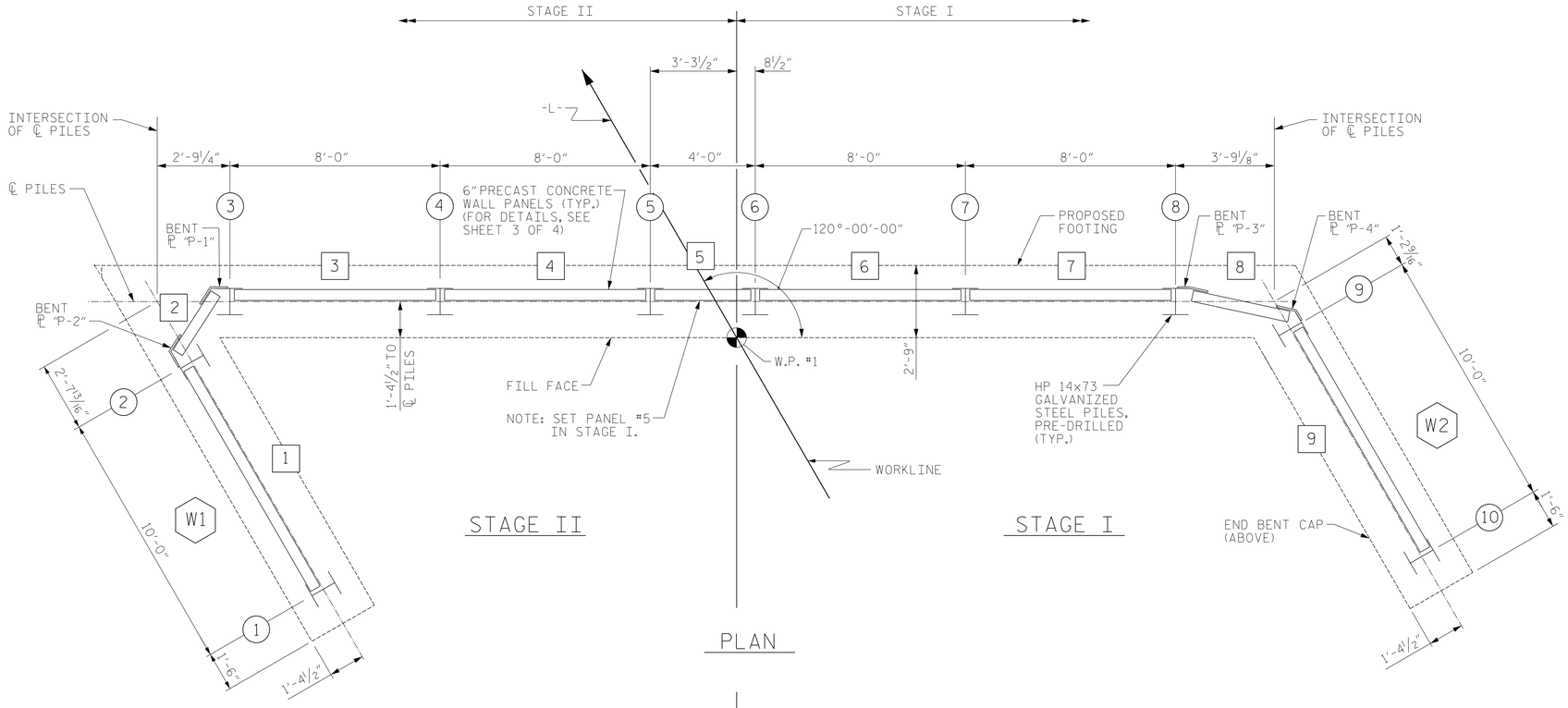

PRECAST CONCRETE PANELS (SQUARE FEET)	
END BENT #1	345.6 SQ. FT.
END BENT #2	105.8 SQ. FT.

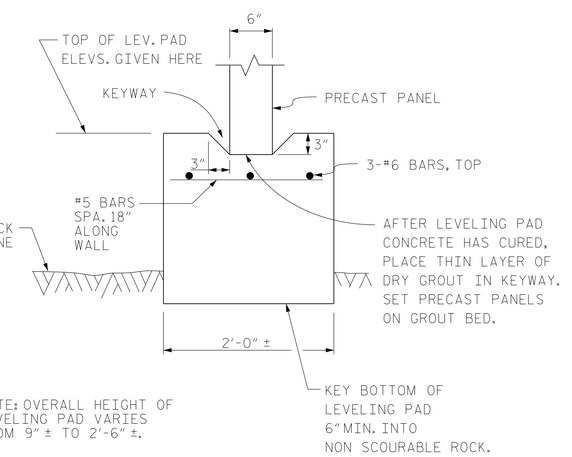

SECTION A-A

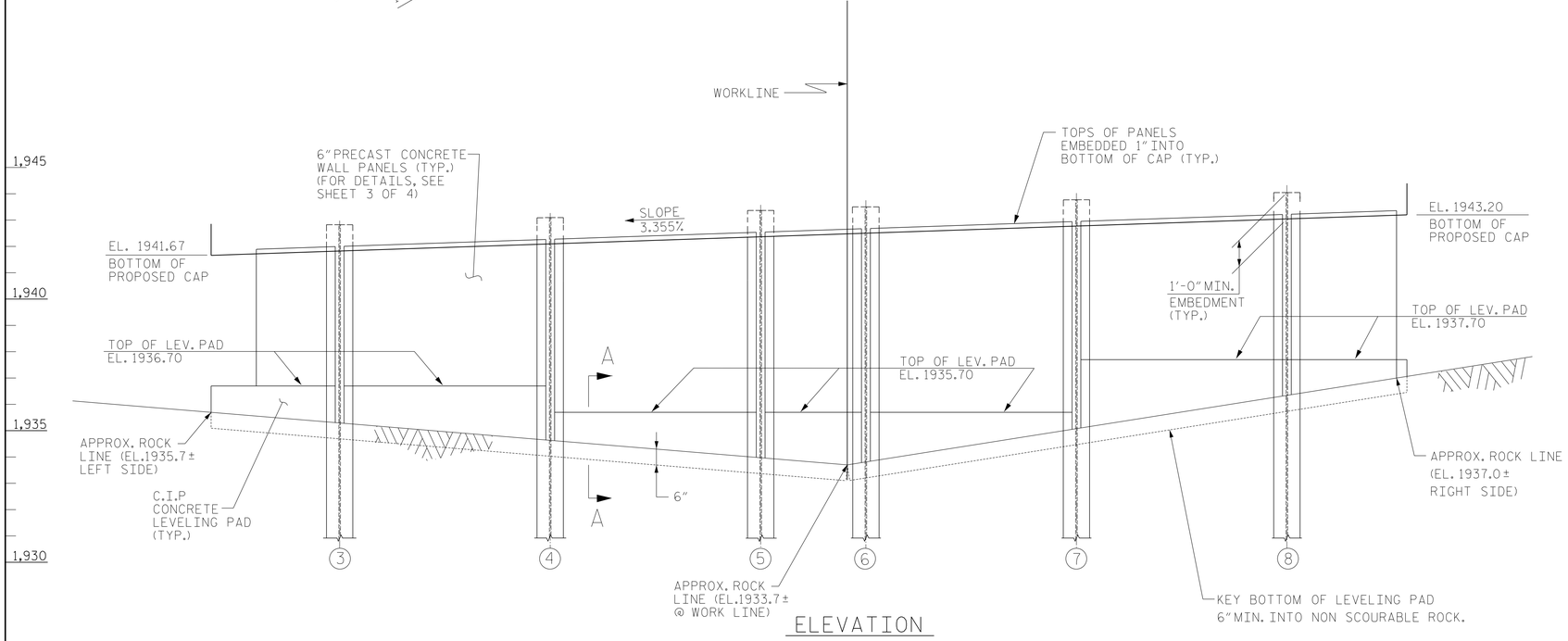

ELEVATION

NOTE: PANELS AT WINGWALLS NOT SHOWN FOR CLARITY

PROJECT NO. 17BP.14.R.135

TRANSYLVANIA COUNTY

STATION: 12+87.25 -L-

SHEET 1 OF 4

DocuSigned by: Hardy Willis
CC287FCF0223461...
10/30/2015

STATE OF NORTH CAROLINA
DEPARTMENT OF TRANSPORTATION
RALEIGH

END BENT NO. 1 ABUTMENT WALL DETAILS

Vaughn & Melton Consulting Engineers

SINCE F&R 1881

DWN. BY: MAF	DATE: 8/2014
CHKD. BY: MW / HLW	DATE: 8/2014
DES. EGR. OF RECORD: TSA	DATE: 8/2014

REVISIONS							SHEET NO.
NO.	BY:	DATE:	NO.	BY:	DATE:		S-1
1			3				TOTAL SHEETS
2			4				4

GEOTECHNICAL ENGINEER	STRUCTURAL ENGINEER

NOTE:

○ NUMBER IN CIRCLE DENOTES PILE DESIGNATION.

□ NUMBER IN SQUARE DENOTES PANEL DESIGNATION.

SEE SHEET S-3 FOR PANEL DETAILS.

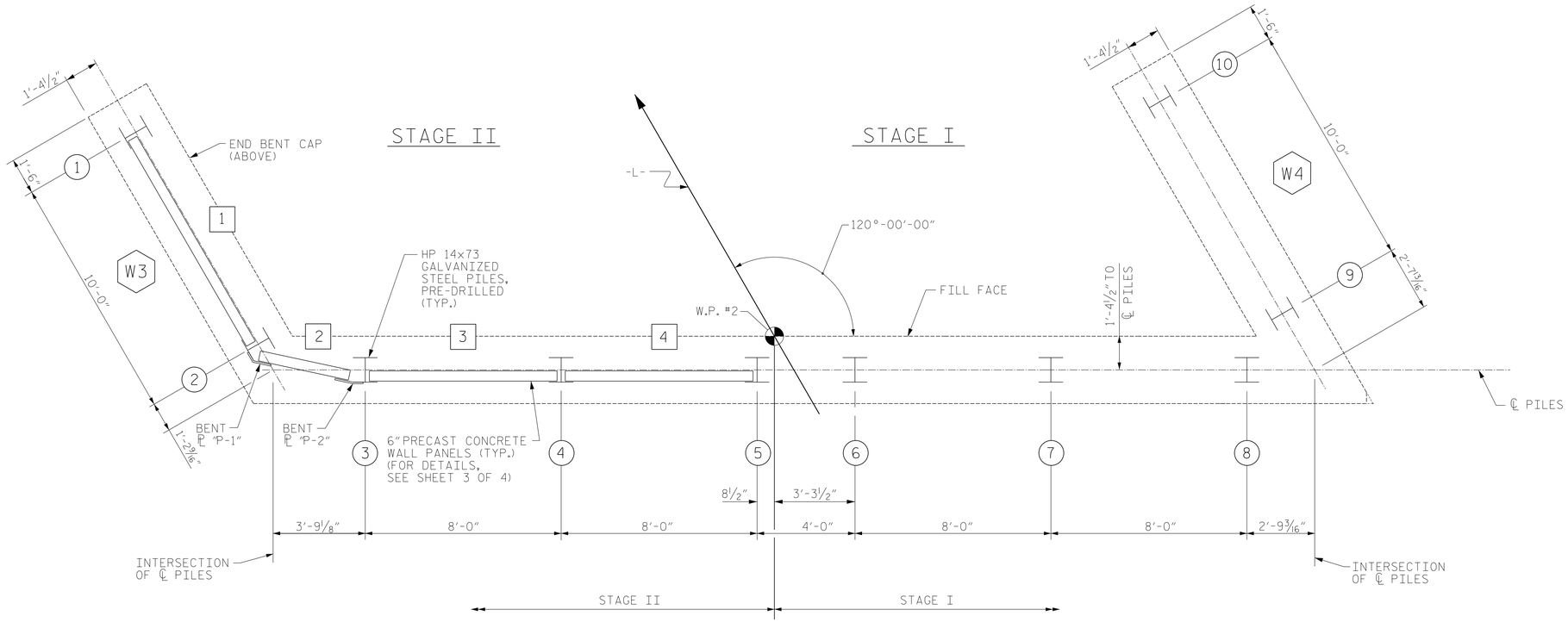

PLAN

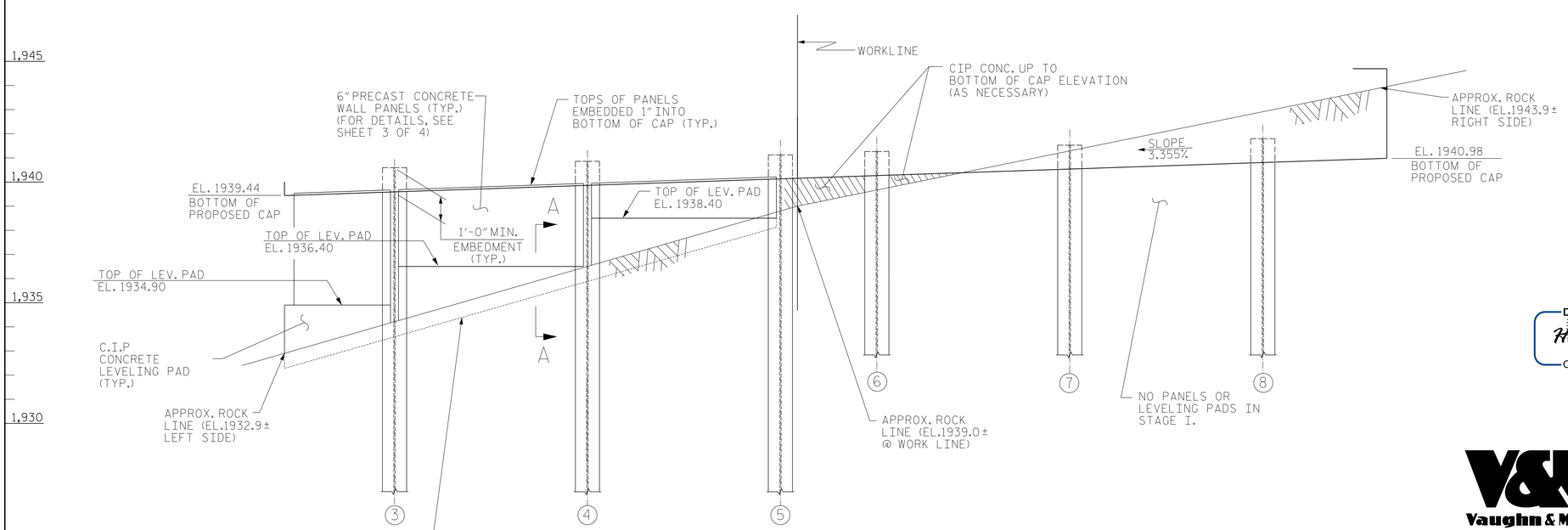

ELEVATION

FOR SECTION A-A, SEE SHEET 1 OF 4

NOTE: PANEL AT WINGWALL NOT SHOWN FOR CLARITY

DocuSigned by: Hardy Willis CC287BCF022348...

10/30/2015

Vaughn & Melton Consulting Engineers

SINCE F&R 1881

DWN. BY: MAF	DATE: 8/2014	
CHKD. BY: MW / HLW	DATE: 8/2014	
DES. EGR. OF RECORD: TSA	DATE: 8/2014	

REVISIONS						SHEET NO.
NO.	BY:	DATE:	NO.	BY:	DATE:	S-2
1			3			TOTAL SHEETS
2			4			4

PROJECT NO. 17BP.14.R.135

TRANSYLVANIA COUNTY

STATION: 12+87.25 -L-

SHEET 2 OF 4

STATE OF NORTH CAROLINA
DEPARTMENT OF TRANSPORTATION
RALEIGH

END BENT NO. 2 ABUTMENT WALL DETAILS

GEOTECHNICAL ENGINEER	STRUCTURAL ENGINEER

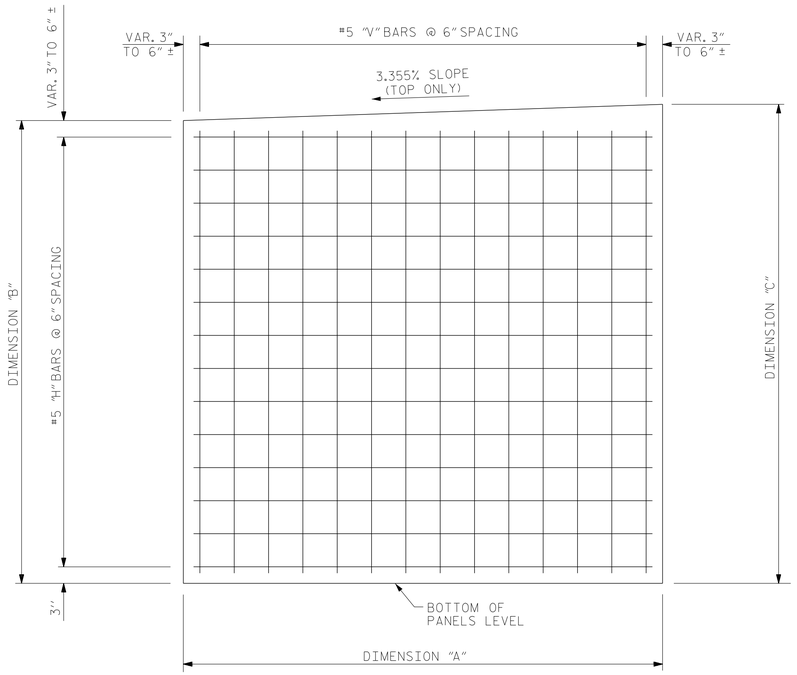

PRECAST PANELS DETAILS

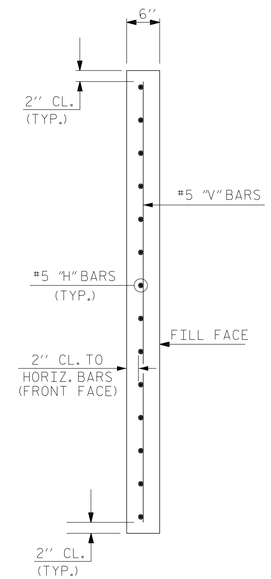

SECTION THRU PANELS

NOTE:

VERIFY PANEL HEIGHT IN FIELD AFTER CONCRETE LEVELING PAD WITH KEYWAY IS POURED.

PANEL TABLE

	PANEL	QUANTITY	DIM "A"	DIM "B"	DIM "C"	NO. OF "V" BARS	NO. OF "H" BARS
END BENT NO. 1	1	1	9'-3"	5'-3 5/8"	5'-3 5/8"	18	10
	2	1	2'-8"	5'-3 5/8"	5'-5 1/2"	5	10
	3	1	7'-3"	5'-5 5/8"	5'-8 3/4"	14	11
	4	1	7'-3"	6'-8 7/8"	7'-0"	14	13
	5	1	3'-3"	7'-0 1/8"	7'-1 5/8"	6	14
	6	1	7'-3"	7'-1 3/4"	7'-4 7/8"	14	14
	7	1	7'-3"	5'-5"	5'-8 1/8"	14	11
	8	1	3'-9"	5'-8 1/4"	5'-10"	7	11
	9	1	9'-3"	5'-10"	5'-10"	18	11
END BENT NO. 2	1	1	9'-3"	4'-10 1/2"	4'-10 1/2"	18	9
	2	1	3'-9"	4'-10 1/2"	5'-0 1/4"	7	9
	3	1	7'-3"	3'-6 3/8"	3'-9 1/2"	14	7
	4	1	7'-3"	1'-9 5/8"	2'-0 3/4"	14	3

DocuSigned by: Hardy Willis
CC2875CF0223481...
10/30/2015

NORTH CAROLINA PROFESSIONAL SEAL ENGINEER HARDY L. WILLIS

PROJECT NO. 17BP.14.R.135

TRANSYLVANIA COUNTY

STATION: 12+87.25 -L-

SHEET 3 OF 4

STATE OF NORTH CAROLINA
DEPARTMENT OF TRANSPORTATION
RALEIGH

PRECAST PANEL DETAILS

Vaughn & Melton Consulting Engineers

SINCE F&R 1881

DWN. BY: MAF	DATE: 8/2014	
CHKD. BY: MW / HLW	DATE: 8/2014	
DES. EGR. OF RECORD: TSA	DATE: 8/2014	

REVISIONS						SHEET NO.
NO.	BY:	DATE:	NO.	BY:	DATE:	S-3
1			3			TOTAL SHEETS
2			4			4

GEOTECHNICAL ENGINEER	STRUCTURAL ENGINEER

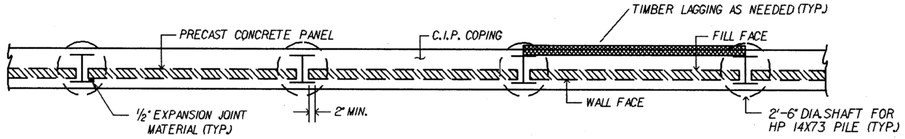

PLAN VIEW
N.T.S.

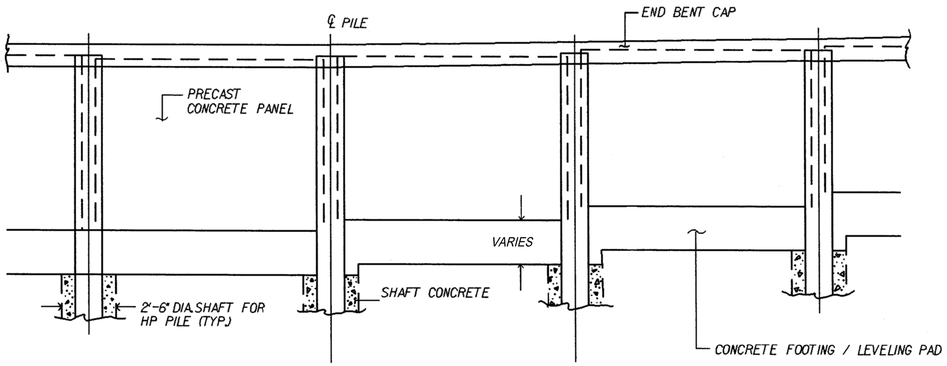

ELEVATION VIEW
N.T.S.

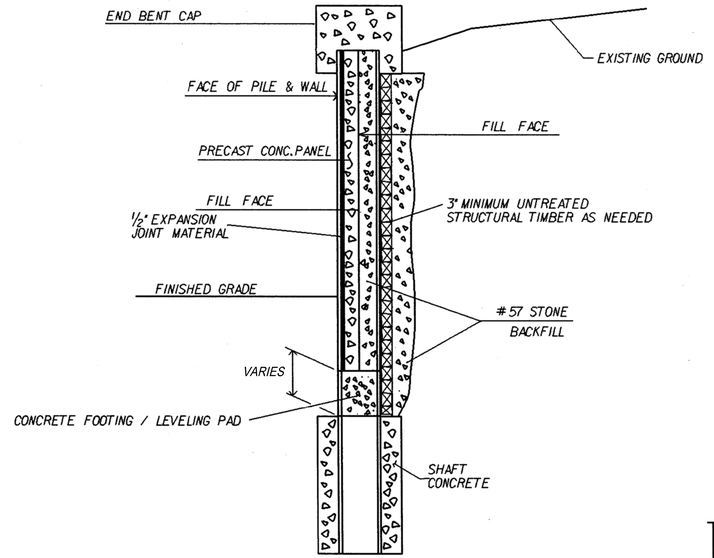

TYPICAL SECTION
N.T.S.

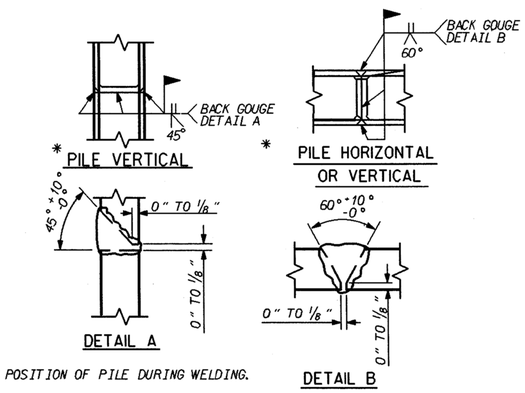

* POSITION OF PILE DURING WELDING.

PILE SPLICE DETAILS
N.T.S.

NOTES:

1. PILES SHALL BE INSTALLED TO THE CUT OFF ELEVATIONS AND LENGTHS SHOWN ON THE PLANS BY PRE-AUGERING OR DRILLING. THE EXCAVATED HOLE SHALL BE 2'-6" MINIMUM DIAMETER AND BACKFILLED WITH CONCRETE TO THE BOTTOM OF THE LEVELLING PAD.
2. PILES SHALL BE ASTM GRADE 50 STEEL WITH THE ADDITION OF 0.2% MINIMUM COPPER.
3. PILES SHALL BE GALVANIZED TO 1'-6" BELOW FINISHED GRADE.
4. SPLICING OF PILES IS ONLY ALLOWED IN THE PORTION OF THE PILE PERMANENTLY BELOW GROUND.
5. THE TOP OF THE INSTALLED PILES SHALL BE WITHIN 2" OF THEIR PLAN LOCATION IN ANY DIRECTION.
6. CONCRETE PANELS SHALL HAVE A MINIMUM BEARING DISTANCE OF 2" ON THE PILE FLANGE. 2" THICK EXPANSION JOINT MATERIAL SHALL BE PLACED BETWEEN THE CONCRETE PANELS AND PILE FLANGES FOR THE WIDTH OF THE BEARING SURFACE.
7. THE CONCRETE PANELS SHALL HAVE A PLAIN GRAY COLOR FACE. SEE SPECIAL PROVISIONS FOR COLOR, TEXTURE AND AGGREGATE REQUIREMENTS.
8. EXCAVATION TO INSTALL PANELS AND TIMBER LAGGING SHALL BE LIMITED TO 6" BEHIND THE PILES. ANY OVEREXCAVATION SHALL BE BACKFILLED WITH NO.57 STONE.
9. CONCRETE PANELS SHALL BE HELD SECURELY AGAINST PILES UNTIL BACKFILL IS PLACED.
10. BOTH CUSHIONING MATERIAL AND BACKFILL MATERIAL BEHIND THE PANELS SHALL BE NO.57 STONE AND COMPACTED AS REQUIRED BY THE ENGINEER. THE STONE SHALL BE RODDED AND SPREAD IN ORDER TO FILL ALL VOIDS AND INSURE MAXIMUM DENSITY. FLUSHING THE STONE WITH WATER TO AID COMPACTION WILL NOT BE ALLOWED.
11. BACKFILLING SHALL BE COMPLETED PRIOR TO FORMING THE CAP.
12. THE CONTRACTOR SHALL VERIFY THE LOCATION OF DRAINAGE STRUCTURES AND UTILITIES PRIOR TO INSTALLING PILES.

15. EXCAVATION SEQUENCE:
    - DRILL MINIMUM 2'-6" DIA. SHAFTS FOR 14" PILES FROM NATURAL GROUND. INSTALL PILES AND BACKFILL WITH CONCRETE TO THE TOP OF SHAFT ELEVATIONS BEFORE EXCAVATING TO INSTALL PANELS OR TIMBER LAGGING.
    - EXCAVATION TO INSTALL THE PANELS OR LAGGING SHALL BE VERTICAL, HAVE A MAXIMUM LIFT HEIGHT OF 4'-0" AND BE LIMITED IN EXTENT TO ONLY WHAT IS NECESSARY.
    - TIMBER LAGGING IS NEEDED ONLY TO MEET OSHA REQUIREMENTS FOR SAFE EXCAVATION HEIGHTS. IF CUT IS LESS THAN 4'-0" HIGH, LAGGING IS NOT REQUIRED.
    - THE LAGGING SHALL HAVE A MINIMUM BEARING DISTANCE OF 3" ON THE PILE FLANGE.
    - UNTREATED STRUCTURAL TIMBERS SHALL BE A MINIMUM OF 3" THICK AND SHALL CONFORM TO THE APPLICABLE PARTS OF SECTIONS 445 AND 1082 OF THE STANDARD SPECIFICATIONS.
    - PLACE BACKFILL BEHIND THE LAGGING IMMEDIATELY AFTER INSTALLATION.
    - WHERE PRACTICAL, THE TOP FEW PIECES OF LAGGING SHALL BE REMOVED PRIOR TO BACKFILLING BEHIND PANELS. ALL OTHER LAGGING SHALL BE LEFT IN PLACE.
    - THE CONTRACTOR MAY ELECT TO USE AN ALTERNATE METHOD OF PROVIDING A SAFE EXCAVATION, HOWEVER, THE ALTERNATE METHOD MUST BE SUBMITTED TO THE ENGINEER FOR REVIEW AND APPROVAL.
16. IF NECESSARY, SPECIAL MEASURES SHALL BE TAKEN TO INSURE THE STABILITY OF THE SHAFT SUCH AS INSTALLING TEMPORARY CASINGS PRIOR TO DRILLING, INSTALLING THE PILE AND PLACING CONCRETE IMMEDIATELY AFTER A SHAFT IS EXCAVATED BEFORE CAVING OCCURS, INSTALLING WELL POINTS, OR OTHER MEASURES. IF CAVING OCCURS, THE SHAFT EXCAVATION OPERATION SHALL BE HALTED UNTIL SPECIAL MEASURES ARE IMPLEMENTED.
17. SHAFT EXCAVATION MAY REQUIRE SPECIALTY DRILLING EQUIPMENT TO PENETRATE INTO WEATHERED ROCK AND FRESH ROCK.
18. THE CONTRACTOR'S ATTENTION IS CALLED TO THE FACT THAT THE PRECAST CONCRETE PANELS SHALL BE PICKED UP FROM THE ENDS WITH THE FILL FACE FACING UP. THE PANELS SHALL BE LOWERED INTO PLACE BETWEEN THE PILES.

PROJECT NO. 17BP.14.R.135
TRANSYLVANIA COUNTY
STATION: 12+87.25 -L-

SHEET 4 OF 4

NORTH CAROLINA PROFESSIONAL SEAL ENGINEER HARDY L. WILLIS 10/30/2015
DocuSigned by: Hardy Willis
CC2B7FCF0223463...

Vaughn & Melton Consulting Engineers
SINCE F&R 1881

STATE OF NORTH CAROLINA
DEPARTMENT OF TRANSPORTATION
RALEIGH

END BENT
ABUTMENT WALL
DETAILS

REVISIONS						SHEET NO.
NO.	BY:	DATE:	NO.	BY:	DATE:	S-4
1			3			TOTAL SHEETS
2			4			4

DWN. BY: MAF DATE: 8/2014
CHKD. BY: MW / HLW DATE: 8/2014
DES. EGR. OF RECORD: TSA DATE: 8/2014