This electronic collection of documents is provided for the convenience of the user and is Not a Certified Document –

The documents contained herein were originally issued and sealed by the individuals whose names and license numbers appear on each page, on the dates appearing with their signature on that page.
This file or an individual page shall not be considered a certified document.

DocuSign Envelope ID: ABF288D9-FBA7-414C-8697-6D7C3644DFD4

TIP PROJECT: 17BP.14.R.114

CONTRACT: DN00275

See Sheet 1-A For Index of Sheets
See Sheet 1B For Conventional Symbols

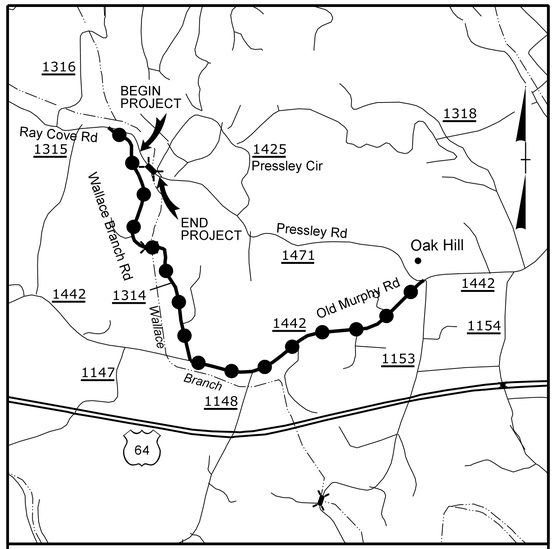

VICINITY MAP NTS

OFF–SITE DETOUR

90% PLANS

STATE OF NORTH CAROLINA
DIVISION OF HIGHWAYS

MACON COUNTY

STATE	STATE PROJECT REFERENCE NO.	SHEET NO.	TOTAL SHEETS
N.C.	17BP.14.R.114	1	

STATE PROJ. NO.	F.A. PROJ. NO.	DESCRIPTION
17BP.14.R.114		PE
17BP.14.R.114		R/W
17BP.14.R.114		CONST.

LOCATION: BRIDGE NO. 217 ON SR 1471 OVER WALLACE BRANCH

TYPE OF WORK: GRADING, PAVING, DRAINAGE, AND STRUCTURE

4

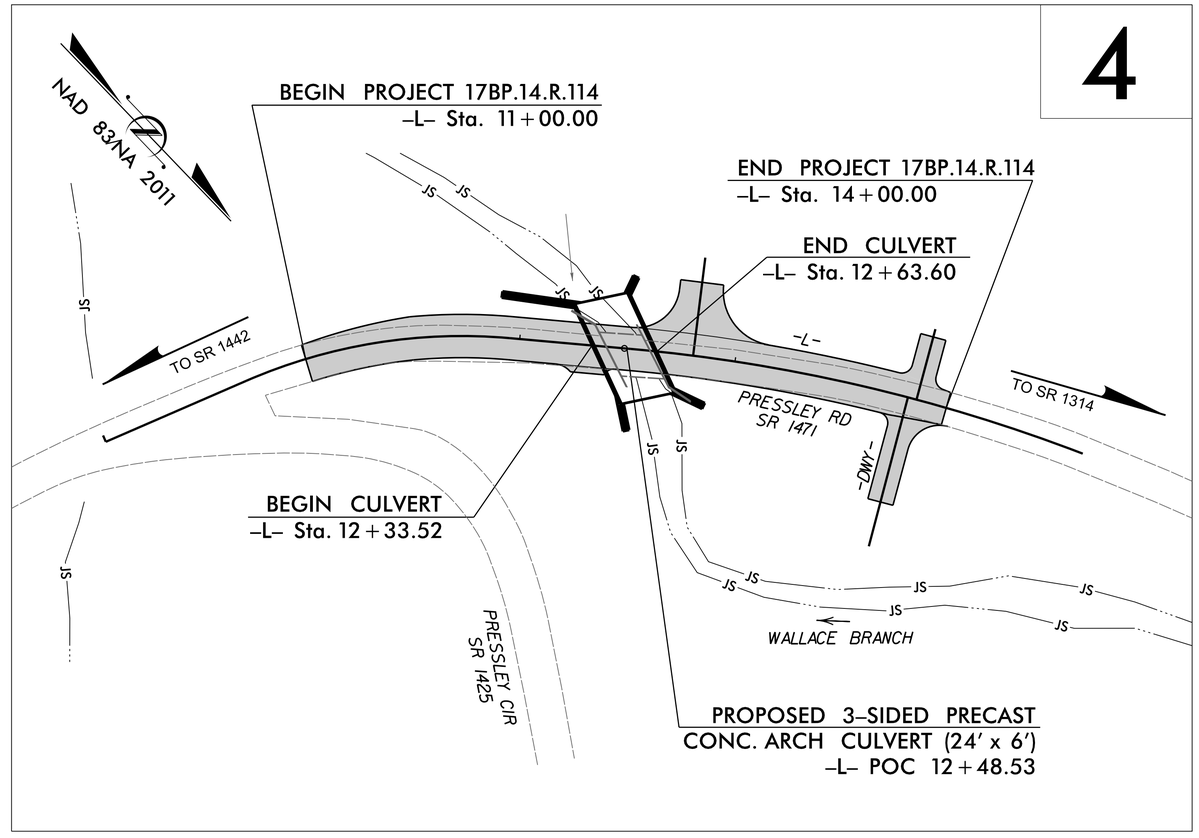

NCDOT CONTACT:
JOSH DEYTON, PE
HIGHWAY DIVISION 14
BRIDGE MANAGER
828–488–0902

GRAPHIC SCALES

20 10 0 20 40
PLANS

20 10 0 20 40
PROFILE (HORIZONTAL)

4 2 0 4 8
PROFILE (VERTICAL)

DESIGN DATA

ADT 2010 = 830
ADT =
K = %
D = %
T = 6 % *
V = 35 MPH
* TTST = DUAL
FUNC CLASS = LOCAL

SUBREGIONAL TIER

PROJECT LENGTH

LENGTH ROADWAY PROJECT	=	0.051 MILES
LENGTH STRUCTURES PROJECT	=	0.006 MILES
TOTAL LENGTH PROJECT	=	0.057 MILES

Prepared In the Office of:
THE LOUIS BERGER GROUP, Inc.
1001 Wade Avenue, Suite 400
Raleigh, North Carolina 27605
License No.: F-0840

2012 STANDARD SPECIFICATIONS

RIGHT OF WAY DATE:

LETTING DATE:

DEAN HATFIELD, PE
PROJECT ENGINEER

WILLIAM TILLITT, PE
PROJECT DESIGN ENGINEER

HYDRAULICS ENGINEER

NORTH CAROLINA PROFESSIONAL SEAL 032134 ENGINEER WALTER ROBERTS

DocuSigned by: Walter Roberts
SIGNATURE: P.E. 10/6/2015

ROADWAY DESIGN ENGINEER

NORTH CAROLINA PROFESSIONAL SEAL 031972 ENGINEER WILLIAM E. TILLITT

DocuSigned by: William Tillitt
SIGNATURE: P.E. 10/6/2015

DIVISION OF HIGHWAYS STATE OF NORTH CAROLINA

STATE OF NORTH CAROLINA DEPARTMENT OF TRANSPORTATION

P.E.
STATE HIGHWAY DESIGN ENGINEER

09/08/99

10/6/2015 9:20:32 AM
G:\CKE Projects\CKE21004 Limited Services Division Offices\Group 3\550217\Roadway\Proj\550217_RDY_00_TSH.dgn
G:\CADD\Plot\CKE21004\CKE21004_rdy.tbl

DocuSign Envelope ID: ABF288D9-FBA7-414C-8697-6D7C3644DFD4

PROJECT REFERENCE NO.	SHEET NO.
17BP.14.R.114	1-A
R/W SHEET NO.	

ROADWAY DESIGN ENGINEER
NORTH CAROLINA PROFESSIONAL SEAL 031972 ENGINEER WILLIAM E. TILLETT
DocuSigned by: William Tillett
ABB6E8F1612E4F9... 10/13/2015

STATE OF NORTH CAROLINA
DIVISION OF HIGHWAYS

INDEX OF SHEETS

INDEX OF SHEETS

SHEET NUMBER	SHEET
1	TITLE SHEET
1-A	INDEX OF SHEETS, GENERAL NOTES, AND LIST OF STANDARD DRAWINGS
1-B	CONVENTIONAL SYMBOLS
1-C	SURVEY CONTROL
2	PAVEMENT SCHEDULE, TYPICAL SECTIONS, AND WEDGING DETAILS
3-A	SUMMARIES OF EARTHWORK, DRAINAGE & GUARDRAIL
4	PLAN SHEET
5	PROFILE SHEET
TMP-1 THRU TMP-3	TRAFFIC CONTROL PLANS
PMP-1	PAVEMENT MARKING PLANS
EC-1 THRU EC-5	EROSION CONTROL PLANS
UO-1 THRU UO-2	UTLITIES BY OTHERS PLANS
X-1 THRU X-7	CROSS-SECTIONS
C-1 THRU C-8	CULVERT PLANS

GENERAL NOTES

GENERAL NOTES:

2012 SPECIFICATIONS
EFFECTIVE: 01-17-12
REVISED: 11/01/11

GRADING AND SURFACING OR RESURFACING AND WIDENING:

THE GRADE LINES SHOWN DENOTE THE FINISHED ELEVATION OF THE PROPOSED SURFACING AT GRADE POINTS SHOWN ON THE TYPICAL SECTIONS. WHERE NO GRADE LINES ARE SHOWN, THE PROFILES SHOWN DENOTE THE TOP ELEVATION OF THE EXISTING PAVEMENT ALONG THE CENTER LINE OF SURVEY ON WHICH THE PROPOSED RESURFACING WILL BE PLACED. GRADE LINES MAY BE ADJUSTED BY THE ENGINEER IN ORDER TO SECURE A PROPER TIE-IN.

CLEARING:

CLEARING ON THIS PROJECT SHALL BE PERFORMED TO THE LIMITS ESTABLISHED BY METHOD III.

SUPERELEVATION:

ALL CURVES ON THIS PROJECT SHALL BE SUPERELEVATED IN ACCORDANCE WITH STD. NO. 225.04 USING THE RATE OF SUPERELEVATION AND RUNOFF SHOWN ON THE PLANS. SUPERELEVATION IS TO BE REVOLVED ABOUT THE GRADE POINTS SHOWN ON THE TYPICAL SECTIONS.

SHOULDER CONSTRUCTION:

ASPHALT, EARTH, AND CONCRETE SHOULDER CONSTRUCTION ON THE HIGH SIDE OF SUPERELEVATED CURVES SHALL BE IN ACCORDANCE WITH STD. NO. 560.01.

GUARDRAIL:

THE GUARDRAIL LOCATIONS SHOWN ON THE PLANS MAY BE ADJUSTED DURING CONSTRUCTION AS DIRECTED BY THE ENGINEER. THE CONTRACTOR SHOULD CONSULT WITH THE ENGINEER PRIOR TO ORDERING GUARDRAIL MATERIAL.

TEMPORARY SHORING:

SHORING REQUIRED FOR THE MAINTENANCE OF TRAFFIC NOT SHOWN ON THE PLANS WILL BE PAID FOR AT THE CONTRACT PRICE FOR "TEMPORARY SHORING".

SUBSURFACE PLANS:

SUBSURFACE PLANS ARE AVAILABLE ON THIS PROJECT.

END BENTS:

THE ENGINEER SHALL CHECK THE STRUCTURE END BENT PLANS, DETAILS, AND CROSS-SECTION PRIOR TO SETTING OF THE SLOPE STAKES FOR THE EMBANKMENT OR EXCAVATION APPROACHING A BRIDGE.

UTILITIES:

UTILITY OWNERS ON THIS PROJECT ARE

DUKE ENERGY CORPORATION

ANY RELOCATION OF EXISTING UTILITIES WILL BE ACCOMPLISHED BY OTHERS.

RIGHT-OF-WAY MARKERS:

ALL RIGHT-OF-WAY MARKERS ON THIS PROJECT SHALL BE PLACED BY CONTRACT IN ACCORDANCE WITH SECTION 801 OF THE 2012 NORTH CAROLINA STANDARD SPECIFICATIONS FOR ROADS AND STRUCTURES

ROADWAY ENGLISH STANDARD DRAWINGS

2012 ROADWAY ENGLISH STANDARD DRAWINGS

The following Roadway Standards as appear in "Roadway Standard Drawings" Highway Design Branch - N. C. Department of Transportation - Raleigh, N. C., Dated January, 2012 are applicable to this project and by reference hereby are considered a part of these plans:

STD.NO.	TITLE
DIVISION 2 - EARTHWORK	
200.03	Method of Clearing - Method III
225.02	Guide for Grading Subgrade - Secondary and Local
225.04	Method of Obtaining Superelevation - Two Lane Pavement
DIVISION 4 - MAJOR STRUCTURES	
422.11	Reinforced Bridge Approach Fills - Sub Regional Tier
DIVISION 5 - SUBGRADE, BASES AND SHOULDERS	
560.01	Method of Shoulder Construction - High Side of Superelevated Curve - Method I
DIVISION 8 - INCIDENTALS	
862.01	Guardrail Placement
862.02	Guardrail Installation
862.03	Structure Anchor Units

REVISIONS

10/6/2015 9:20:33 AM
G:\CKE Projects\CKE21004 Limited Services Division Offices\Group 3\550217\Roadway\Proj\550217_RDY_01_1A.dgn
G:\CADD\Plot\CKE21004\CKE21004_rdy.tbl

THE LOUIS BERGER GROUP, Inc.
1001 Wade Avenue, Suite 400
Raleigh, NC 27605-3322

ROADWAY PLANS

PROJECT REFERENCE NO.	SHEET NO.
17BP.14.R.114	1-B

Note: Not to Scale

**S.U.E. = Subsurface Utility Engineering*

STATE OF NORTH CAROLINA
DIVISION OF HIGHWAYS

CONVENTIONAL PLAN SHEET SYMBOLS

BOUNDARIES AND PROPERTY:

- State Line
- County Line
- Township Line
- City Line
- Reservation Line
- Property Line
- Existing Iron Pin — EIP
- Property Corner
- Property Monument — ECM
- Parcel/Sequence Number — 123
- Existing Fence Line
- Proposed Woven Wire Fence
- Proposed Chain Link Fence
- Proposed Barbed Wire Fence
- Existing Wetland Boundary — WLB
- Proposed Wetland Boundary — WLB
- Existing Endangered Animal Boundary — EAB
- Existing Endangered Plant Boundary — EPB
- Known Soil Contamination: Area or Site
- Potential Soil Contamination: Area or Site

BUILDINGS AND OTHER CULTURE:

- Gas Pump Vent or U/G Tank Cap
- Sign — S
- Well — W
- Small Mine
- Foundation
- Area Outline
- Cemetery
- Building
- School
- Church
- Dam

HYDROLOGY:

- Stream or Body of Water
- Hydro, Pool or Reservoir
- Jurisdictional Stream — JS
- Buffer Zone 1 — BZ 1
- Buffer Zone 2 — BZ 2
- Flow Arrow
- Disappearing Stream
- Spring
- Wetland
- Proposed Lateral, Tail, Head Ditch — FLOW
- False Sump

RAILROADS:

- Standard Gauge — CSX TRANSPORTATION
- RR Signal Milepost — MILEPOST 35
- Switch — SWITCH
- RR Abandoned
- RR Dismantled

RIGHT OF WAY:

- Baseline Control Point
- Existing Right of Way Marker
- Existing Right of Way Line
- Proposed Right of Way Line — RW
- Proposed Right of Way Line with Iron Pin and Cap Marker — RW
- Proposed Right of Way Line with Concrete or Granite Marker — RW
- Existing Control of Access — CA
- Proposed Control of Access — CA
- Existing Easement Line — E
- Proposed Temporary Construction Easement — E
- Proposed Temporary Drainage Easement — TDE
- Proposed Permanent Drainage Easement — PDE
- Proposed Permanent Drainage / Utility Easement — DUE
- Proposed Permanent Utility Easement — PUE
- Proposed Temporary Utility Easement — TUE
- Proposed Aerial Utility Easement — AUE
- Proposed Permanent Easement with Iron Pin and Cap Marker

ROADS AND RELATED FEATURES:

- Existing Edge of Pavement
- Existing Curb
- Proposed Slope Stakes Cut — C
- Proposed Slope Stakes Fill — F
- Proposed Curb Ramp — CR
- Existing Metal Guardrail
- Proposed Guardrail
- Existing Cable Guiderail
- Proposed Cable Guiderail
- Equality Symbol
- Pavement Removal

VEGETATION:

- Single Tree
- Single Shrub
- Hedge
- Woods Line
- Orchard
- Vineyard — Vineyard

EXISTING STRUCTURES:

MAJOR:

- Bridge, Tunnel or Box Culvert — CONC
- Bridge Wing Wall, Head Wall and End Wall — CONC WW

MINOR:

- Head and End Wall — CONC HW
- Pipe Culvert
- Footbridge
- Drainage Box: Catch Basin, DI or JB — CB
- Paved Ditch Gutter
- Storm Sewer Manhole — S
- Storm Sewer — S

UTILITIES:

POWER:

- Existing Power Pole
- Proposed Power Pole
- Existing Joint Use Pole
- Proposed Joint Use Pole
- Power Manhole — P
- Power Line Tower
- Power Transformer
- U/G Power Cable Hand Hole
- H-Frame Pole
- Recorded U/G Power Line — P
- Designated U/G Power Line (S.U.E.*) — P

TELEPHONE:

- Existing Telephone Pole
- Proposed Telephone Pole
- Telephone Manhole — T
- Telephone Booth
- Telephone Pedestal — T
- Telephone Cell Tower
- U/G Telephone Cable Hand Hole — HH
- Recorded U/G Telephone Cable — T
- Designated U/G Telephone Cable (S.U.E.*) — T
- Recorded U/G Telephone Conduit — TC
- Designated U/G Telephone Conduit (S.U.E.*) — TC
- Recorded U/G Fiber Optics Cable — T FO
- Designated U/G Fiber Optics Cable (S.U.E.*) — T FO

WATER:

- Water Manhole — W
- Water Meter
- Water Valve
- Water Hydrant
- Recorded U/G Water Line
- Designated U/G Water Line (S.U.E.*)
- Above Ground Water Line — A/G Water

TV:

- TV Satellite Dish
- TV Pedestal — C
- TV Tower
- U/G TV Cable Hand Hole — HH
- Recorded U/G TV Cable — TV
- Designated U/G TV Cable (S.U.E.*) — TV
- Recorded U/G Fiber Optic Cable — TV FO
- Designated U/G Fiber Optic Cable (S.U.E.*) — TV FO

GAS:

- Gas Valve
- Gas Meter
- Recorded U/G Gas Line — G
- Designated U/G Gas Line (S.U.E.*) — G
- Above Ground Gas Line — A/G Gas

SANITARY SEWER:

- Sanitary Sewer Manhole
- Sanitary Sewer Cleanout
- U/G Sanitary Sewer Line — SS
- Above Ground Sanitary Sewer — A/G Sanitary Sewer
- Recorded SS Forced Main Line — FSS
- Designated SS Forced Main Line (S.U.E.*) — FSS

MISCELLANEOUS:

- Utility Pole
- Utility Pole with Base
- Utility Located Object
- Utility Traffic Signal Box — S
- Utility Unknown U/G Line — ?UTL
- U/G Tank; Water, Gas, Oil
- Underground Storage Tank, Approx. Loc. — UST
- A/G Tank; Water, Gas, Oil
- Geoenvironmental Boring
- U/G Test Hole (S.U.E.*)
- Abandoned According to Utility Records — AATUR
- End of Information — E.O.I.

04/16/11
10/6/2015 9:20:34 AM
G:\CADD\Plot\CKE2004\CKE2004_rdy_tbl
G:\CKE Projects\CKE2004 Limited Services Division Offices\Group 3\55021\Roadway\Proj\55021_RDY_01_1B.dgn

PROJECT REFERENCE NO.	SHEET NO.
17BP.14.R.114	1C
Location and Surveys	

SURVEY CONTROL SHEET 55–0217
–FINAL–

BL

POINT	DESC.	NORTH	EAST	ELEVATION	L STATION	OFFSET
1	BL-1	547675.2744	679643.6487	2110.70	OUTSIDE PROJECT LIMITS	
2	BL-2	547730.9836	679461.4450	2109.71	10+73.75	9.84 LT
3	BL-3	547831.2620	679336.7672	2109.86	12+31.43	7.65 LT
4	BL-4	547993.4590	679215.0847	2118.86	14+32.05	13.98 LT
5	BL-5	548196.0891	679156.7635	2131.00	OUTSIDE PROJECT LIMITS	

BM1 ELEVATION = 2108.32
N 547797 E 679667
L STATION 10+00.00
N 58°09'0.62" E DIST 155.88
NAIL IN BASE OF 16" POPLAR

BM2 ELEVATION = 2107.76
N 547838 E 679311
L STATION 12+53.00 22 LEFT
NAIL IN BASE OF 12" WALNUT

BM3 ELEVATION = 2135.88
N 548114 E 679152
L STATION 10+00.00
S 70°41'28.81" W DIST 22.78'
NAIL IN BASE OF 14" PINE

-FINAL- ROW MARKER IRON PIN AND CAP-E

ALIGN	STATION	OFFSET	NORTH	EAST
L	11+00.00	-9.30	547742.5538	679436.7789
L	11+00.00	-30.00	547724.1122	679427.3770
L	11+95.43	-30.00	547789.4382	679343.6077
L	12+51.50	-30.00	547831.6807	679306.7356
L	14+00.00	-30.00	547956.8678	679217.0203
L	14+00.00	-10.56	547966.6283	679233.8324
L	14+00.00	11.44	547977.6741	679252.8585
L	14+00.00	30.00	547986.9927	679268.9095
L	12+51.50	30.00	547871.1363	679351.9380
L	11+95.43	30.00	547828.8939	679388.8101
L	11+71.61	30.00	547813.7872	679403.3197

-FINAL- ROW MARKER PERMANENT EASEMENT-E

ALIGN	STATION	OFFSET	NORTH	EAST
L	11+95.43	-40.00	547782.865	679336.072
L	12+60.00	-40.00	547782.865	679293.359
L	12+82.24	-40.00	547782.865	679278.429
L	12+75.77	-30.00	547782.865	679290.458
L	13+00.00	30.00	547907.1985	679322.3965
L	12+35.00	50.00	547871.8595	679377.8541
L	12+18.02	30.00	547845.9131	679373.9545

FINAL -L-

TYPE	STATION	NORTH	EAST
POT	10+00.00	547714.5420	679534.1272
PC	10+70.78	547739.1177	679467.7498
PT	11+95.43	547809.1660	679366.2089
PC	12+51.50	547851.4085	679329.3368
PT	15+04.66	548065.7146	679196.6770
POT	15+65.45	548121.9106	679173.5147

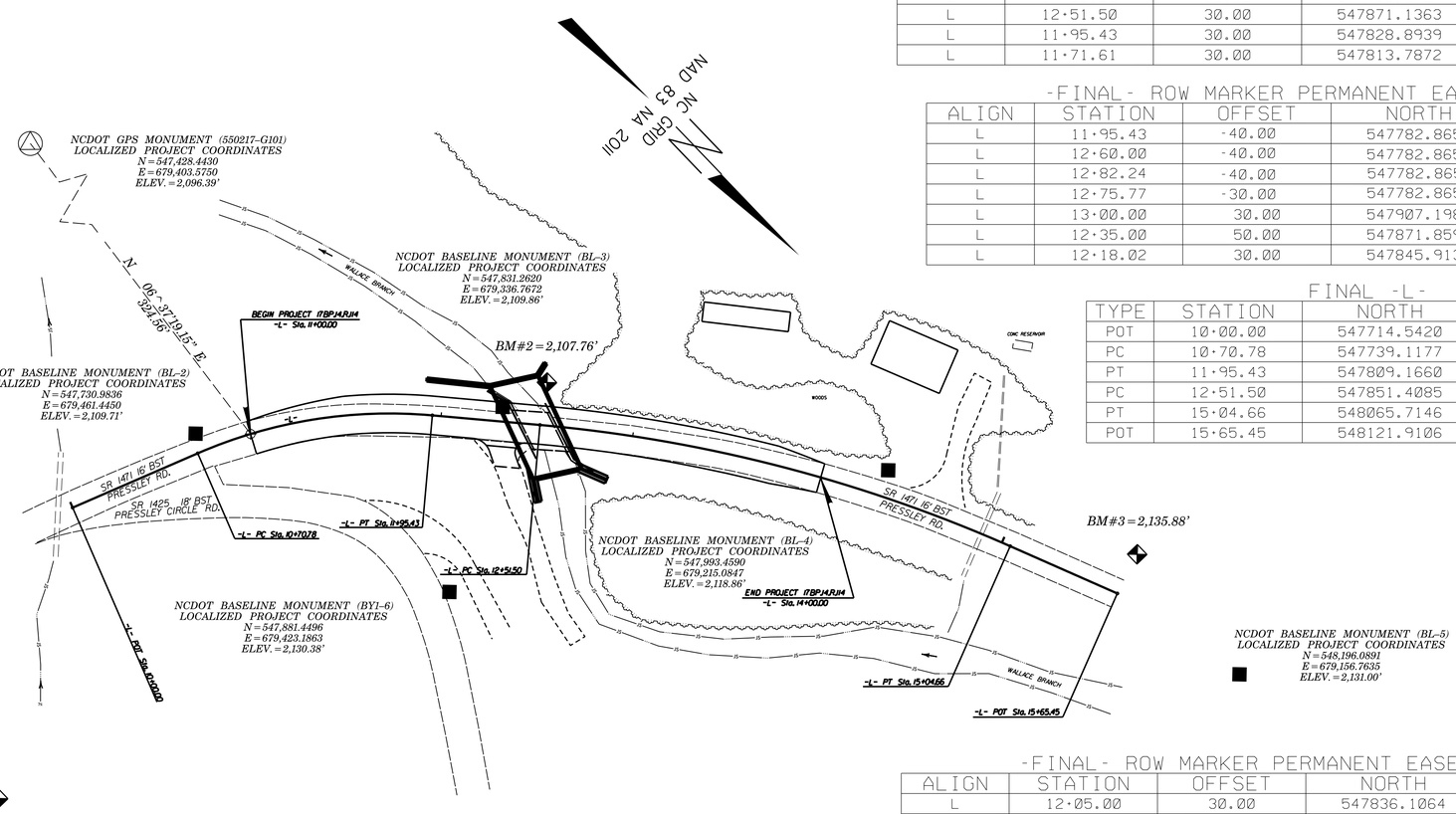

-FINAL- ROW MARKER PERMANENT EASEMENT-E

ALIGN	STATION	OFFSET	NORTH	EAST
L	12+05.00	30.00	547836.1064	679382.5145
L	12+31.27	61.52	547876.6224	679388.9880
L	13+28.98	30.00	547929.6064	679305.8400

DATUM DESCRIPTION

THE LOCALIZED COORDINATE SYSTEM DEVELOPED FOR THIS PROJECT IS BASED ON THE STATE PLANE COORDINATES ESTABLISHED BY NCDOT FOR MONUMENT 550217 (GPS-101) WITH NAD 83/NA 2011 STATE PLANE GRID COORDINATES OF NORTHING: 547428.4430(ft) EASTING: 679403.5750(ft) ELEVATION: 2096.39(ft)
THE AVERAGE COMBINED GRID FACTOR USED ON THIS PROJECT (GROUND TO GRID) IS: 0.9997773695
THE N.C. LAMBERT GRID BEARING AND LOCALIZED HORIZONTAL GROUND DISTANCE FROM 550217 (GPS-101) TO -L- STATION 11+00.00 IS N 6°37'19.15" E 324.56'
ALL LINEAR DIMENSIONS ARE LOCALIZED HORIZONTAL DISTANCES
VERTICAL DATUM USED IS NAVD 88

GEOIDAL MODEL: G12NC
NOTE: DRAWING NOT TO SCALE

NOTES:

1. *THE CONTROL DATA FOR THIS PROJECT CAN BE FOUND ELECTRONICALLY BY SELECTING PROJECT CONTROL DATA AT:*
   HTTPS://CONNECT.NCDOT.GOV/RESOURCES/LOCATION/

   THE FILES TO BE FOUND ARE AS FOLLOWS:
   55–0217_LS_CONTROL.TXT

   SITE CALIBRATION INFORMATION HAS NOT BEEN PROVIDED FOR THIS PROJECT. IF FURTHER INFORMATION IS NEEDED, PLEASE CONTACT THE LOCATION AND SURVEYS UNIT.

INDICATES GEODETIC CONTROL MONUMENTS USED OR SET FOR HORIZONTAL PROJECT CONTROL BY THE NCDOT LOCATION AND SURVEYS UNIT.
PROJECT CONTROL ESTABLISHED USING GLOBAL POSITIONING SYSTEM.

6/2/99
10/6/2015 9:20:35 AM
G:\CKE Projects\CKE21004 Limited Services Division Offices\Group 3\550217\Roadway\Proj\550217_ls_lc.dgn
G:\CADD\Plot\CKE21004\CKE21004_rdy.tbl

DocuSign Envelope ID: ABF288D9-FBA7-414C-8697-6D7C3644DFD4

PROJECT REFERENCE NO.	SHEET NO.
17BP.14.R.114	2
R/W SHEET NO.	
ROADWAY DESIGN ENGINEER	PAVEMENT DESIGN ENGINEER

NORTH CAROLINA PROFESSIONAL SEAL 031972 ENGINEER WILLIAM E. TILLETT

DocuSigned by: William E. Tillett
ABB6E8F1612E4F9... 10/13/2015

N.T.S

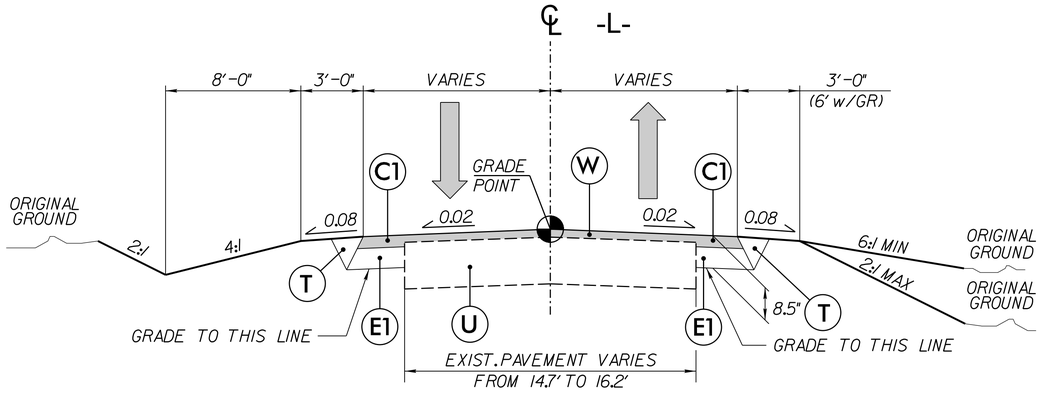

TYPICAL SECTION No. 1

–L– STA 11+00.00 TO –L– STA 12+20.00
–L– STA 12+80.00 TO –L– STA 14+00.00

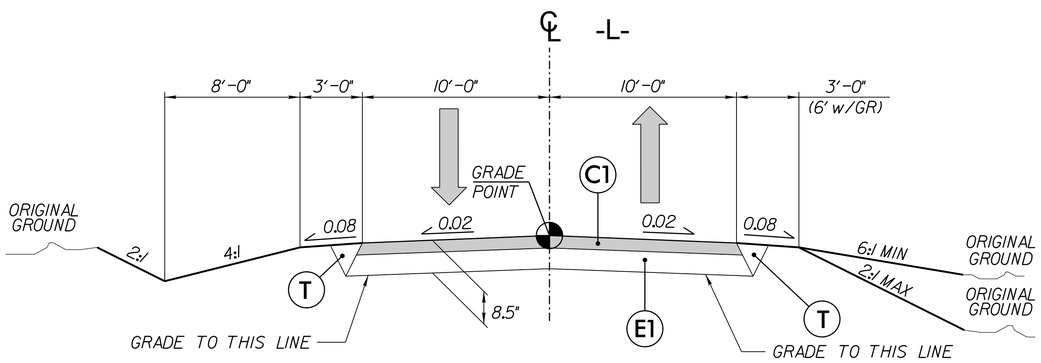

TYPICAL SECTION No. 2

–L– STA 12+20.00 TO –L– STA 12+80.00

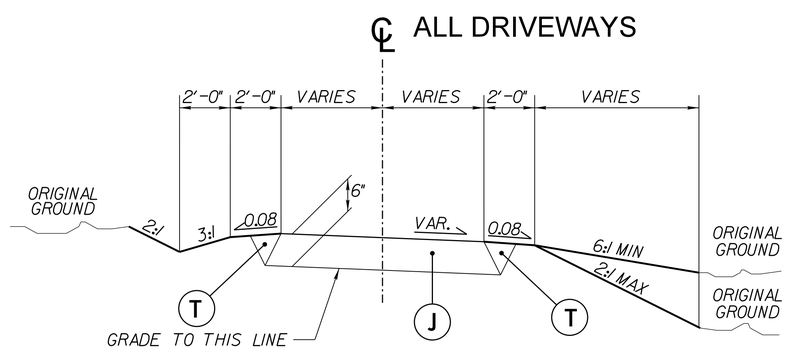

DRIVEWAY DETAIL

(SEE PLANS FOR DWY LOCATION)

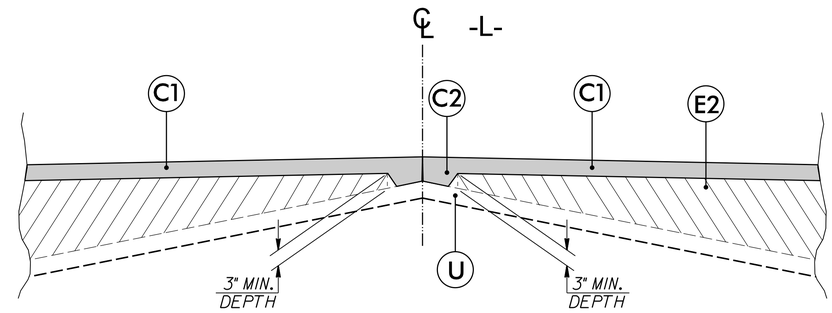

DETAIL SHOWING METHOD OF WEDGING

Note: Pavement edge slopes are 1:1 unless shown otherwise.

PAVEMENT SCHEDULE	
ITEM	DESCRIPTION
C	Prop. Approx 1.5" Asphalt Concrete Surface Course, Type S9.5B, at an Average Rate of 168 lbs. Per sq. yard.
C1	Prop. Approx 3.0" Asphalt Concrete Surface Course, Type S9.5B, at an Average Rate of 168 lbs. Per sq. yard in each of two layers.
C2	Prop. Var. Depth Asphalt Concrete Surface Course, Type S9.5B, at an Average Rate of 112 lbs. Per sq. yard Per 1" Depth, to be placed in layers not less than 1.5" or greater than 2" in depth.
E1	Prop. Approx 5.5" Asphalt Concrete Base Course, Type B25.0B, at an Average Rate of 627 lbs. Per sq. yard.
E2	Prop. Var. Depth Asphalt Concrete Base Course, Type B25.0B, at an Average Rate of 114 lbs. Per sq. yard Per 1" Depth, to be placed in layers not less than 4" or greater than 5.5" in depth.
J	6" ABC
T	Earth Material
U	Existing Pavement
W	Var. Depth Asphalt Pavement

REVISIONS

10/6/2015 9:20:36 AM
G:\CKE Projects\CKE21004 Limited Services Division Offices\Group 3\550217\Roadway\Proj\550217_RDY_02_TYP.dgn
G:\CADD\Plot\CKE21004\CKE21004_rdy.tbl

DocuSign Envelope ID: ABF288D9-FBA7-414C-8697-6D7C3644DFD4

PROJECT REFERENCE NO.	SHEET NO.
17BP.14.R.11.4	3-A
R/W SHEET NO.	

ROADWAY DESIGN ENGINEER
NORTH CAROLINA PROFESSIONAL SEAL 031972 ENGINEER
DocuSigned by: Julie A. Tillitt
DocuSign Envelope ID: 1FD03A4F-A0B1-4E7B-A7A1-A8A8A7A4A7F5
10/13/2015

HYDRAULICS ENGINEER
NORTH CAROLINA PROFESSIONAL SEAL 032134 ENGINEER
DocuSigned by: William E. Roberts
DocuSign Envelope ID: 11D03A4F-A0B1-4E7B-A7A1-A8A8A7A4A7F5
10/13/2015

STATE OF NORTH CAROLINA
DIVISION OF HIGHWAYS

"N" = DISTANCE FROM EDGE OF LANE TO FACE OF GUARDRAIL.
TOTAL SHOULDER WIDTH = DISTANCE FROM EDGE OF TRAVEL LANE TO SHOULDER BREAK POINT.
FLARE LENGTH = DISTANCE FROM LAST SECTION OF PARALLEL GUARDRAIL TO END OF GUARDRAIL.
W = TOTAL WIDTH OF FLARE FROM BEGINNING OF TAPER TO END OF GUARDRAIL.
G = GATING IMPACT ATTENUATOR TYPE 350
NG = NON-GATING IMPACT ATTENUATOR TYPE 350

GUARDRAIL SUMMARY

SURVEY LINE	BEG. STA.	END STA.	LOCATION	LENGTH			WARRANT POINT		"N" DIST. FROM E.O.L.	TOTAL SHOUL. WIDTH	FLARE LENGTH		W		ANCHORS									IMPACT ATTENUATOR TYPE 350			SINGLE FACED GUARDRAIL	REMOVE EXISTING GUARDRAIL	REMOVE AND STOCKPILE EXISTING GUARDRAIL	REMARKS
				STRAIGHT	SHOP CURVED	DOUBLE FACED	APPROACH END	TRAILING END			APPROACH END	TRAILING END	APPROACH END	TRAILING END	XI MOD	XI	GRAU 350 TL-2	M-350	TYPE-III	CAT-1	VI MOD	B-77	AT-1	EA	G	NG				
-L-	11+40.00	13+02.50	LT	162.5'	–	–	–	–	3'	4.45'	–	–	–	–	–	–	2	–	–	–	–	–	–	–	–	–	–	–	–	–
-L-	12+33.75	13+40.00	RT	106.25'	12.5'	–	–	–	3'	4.45'	–	–	–	–	–	–	1	–	–	–	–	–	1	–	–	–	–	–	–	–
–	–	–	–	–	–	–	–	–	–	–	–	–	–	–	–	–	–	–	–	–	–	–	–	–	–	–	–	–	–	–
–	–	–	–	–	–	–	–	–	–	–	–	–	–	–	–	–	–	–	–	–	–	–	–	–	–	–	–	–	–	–
–	–	–	–	–	–	–	–	–	–	–	–	–	–	–	–	–	–	–	–	–	–	–	–	–	–	–	–	–	–	–
–	–	–	–	–	–	–	–	–	–	–	–	–	–	–	–	–	–	–	–	–	–	–	–	–	–	–	–	–	–	–
			SUB-TOTAL	268.75'	12.5'										DEDUCTIONS FOR GUARDRAIL ANCHOR UNITS															
	DEDUCTIONS FOR GUARDRAIL ANCHOR UNITS			81.25'											TYPE TL-2			3 @ 25.00' =		75'										
			TOTAL	187.5'											AT-1			1 @ 6.25' =		6.25'										
															–			–		–										
			SAY	187.5'	12.5'													TOTAL =		81.25'										

SUMMARY OF EARTHWORK (IN CUBIC YARDS)

STATION	STATION	UNCL. EXCAV.	EMBANK. +%	BORROW	WASTE
-L- 11+00.00	12+50.00	11	62	51	–
-L- 12+50.00	14+00.00	44	133	89	–
–	–	–	–	–	–
–	–	–	–	–	–
–	–	–	–	–	–
–	–	–	–	–	–
PROJECT TOTALS:		55	195	140	–
		–	–	–	–
–		–	–	–	–
–		–	–	–	–
LOSS DUE TO CLEARING & GRUBBING		-5	–	–	–
WASTE IN LIEU OF BORROW		–	–	–	–
–		–	–	–	–
GRAND TOTALS:		50	195	140	–
–		–	–	–	–
SAY:		50	–	140	–

DDE = 20 CY
CONTINGENCY ITEMS
UNDERCUT EXCAVATION 50 CY
SELECT GRANULAR MATERIAL 50 CY
GOETEXTILE FOR SOIL STABILIZATION 50 CY
CLASS IV SUBGRADE STABILIZATION 25 TONS

PAVEMENT REMOVAL SUMMARY

SURVEY LINE	STATION	STATION	LOCATION LT/RT/CL	YD^2
L	11+35	12+20	RT	10
–	–	–	–	–
–	–	–	–	–
–	–	–	–	–
			TOTAL:	10
				–
			SAY:	10

NOTE: INVERT ELEVATIONS INDICATED ARE FOR BID PURPOSES ONLY AND SHALL NOT BE USED FOR PROJECT CONSTRUCTION STAKEOUT. SEE "STANDARDS SPECIFICATIONS FOR ROADS AND STRUCTURES, SECTION 300-5".

LIST OF PIPES, ENDWALLS, ETC. (FOR PIPES 48" & UNDER)

STATION	LOCATION (LT,RT, OR CL)	STRUCTURE NO. FROM	STRUCTURE NO. TO	TOP ELEVATION	INVERT ELEVATION	INVERT ELEVATION	SLOPE CRITICAL	DRAINAGE PIPE (RCP, CSP, CAAP, HDPE, or PVC) SIZE	THICKNESS OR GAUGE	C.S. PIPE SIZE	THICKNESS OR GAUGE	R.C. PIPE CLASS III	R.C. PIPE CLASS IV	** " R.C. PIPE (CLASS V)	**** R.C. PIPE CULVERTS, CONTRACTOR DESIGN	**** R.C. PIPE CULVERTS, CONTRACTOR DESIGN	18" SIDE DRAIN PIPE	ENDWALLS STD. 838.01, STD. 838.11 OR STD. 838.80 (UNLESS NOTED OTHERWISE) CU. YDS. R.C.P.	C.S.P.	QUANTITIES FOR DRAINAGE STRUCTURES PER EACH (0' THRU 5.0')	* TOTAL L.F. FOR PAY QUANTITY SHALL BE COL. "A" + (1.3 X COL. B') LIN. *FT. A	B 5.0' THRU 10.0'	10.0' AND ABOVE	C.B. STD. 840.01 OR STD. 840.02	FRAME, GRATES AND HOOD STANDARD 840.03 TYPE OF GRATE E	F	G	CONCRETE TRASHONAL SECTION DROP INLET	CATCH BASIN	D.I. STD. 840.14 OR STD. 840.15	D.I. FRAME & GRATE STD. 840.16	G.D.I. TYPE "A" STD. 840.17 OR 840.26	G.D.I. TYPE "B" STD. 840.18 OR 840.27	G.D.I. TYPE "D" STD. 840.19 OR 840.28	G.D.I. FRAME WITH GRATE STD. 840.20	G.D.I. FRAME WITH TWO GRATE STD. 840.22	G.D.I. (N.S.) FRAME WITH GRATE STD. 840.24	G.D.I. (N.S.) FRAME WITH TWO GRATES STD. 840.37	J.B. STD. 840.31 OR 840.32	TB G.D.I STD. 840.35 OR 840.36	F.E.S. FLARED END SECTION STD	CONVERT TO MH	DRAINAGE PIPE ELBOWS NO. & SIZE	DRAINAGE PIPE ELBOWS NO. & SIZE	CONC. & BRICK PIPE PLUG, C.Y. STD. 840.71	CONC. COLLARS CL. "B" C.Y. STD 840.72	PIPE REMOVAL LIN. FT.	REMARKS
-L- 12+00	RT	0401		2109.05	2106.30	2105.90						36								1														1		1									23'	
-L- 12+60	LT	0402			2109.51	2105.00							44																																						
SHEET TOTALS												36	44							1														1		1														

ABBREVIATIONS

C.B.	CATCH BASIN
N.D.I.	NARROW DROP INLET
D.I.	DROP INLET
G.D.I.	GRATED DROP INLET
G.D.I. (N.S.)	GRATED DROP INLET (NARROW SLOT)
J.B.	JUNCTION BOX
M.H.	MANHOLE
T.B.D.I.	TRAFFIC BEARING DROP INLET
T.B.J.B.	TRAFFIC BEARING JUNCTION BOX

Note: Approximate quantities only. Unclassified Excavation, Fine Grading, and Clearing and Grubbing will be paid for at the contract lump sum price for "Grading."

REVISIONS

10/6/2015 9:20:37 AM
G:\CKE Projects\CKE21004 Limited Services Division Offices\Group 3\550217\Roadway\Proj\550217_RDY_03A_SUMMARY.dgn
G:\CADD\Plot\CKE21004\CKE21004_rdy.tbl

THE LOUIS BERGER GROUP, Inc.
1001 Wade Avenue, Suite 400
Raleigh, NC 27605-3322

ROADWAY PLANS

DocuSign Envelope ID: ABF288D9-FBA7-414C-8697-6D7C3644DFD4

PROJECT REFERENCE NO.	SHEET NO.
17BPJ4.RJ14	4
R/W SHEET NO.	

ROADWAY DESIGN ENGINEER	HYDRAULICS ENGINEER
NORTH CAROLINA PROFESSIONAL SEAL 031972 ENGINEER TIMOTHY A. TILLETT	NORTH CAROLINA PROFESSIONAL SEAL 032134 ENGINEER TIMOTHY W. ROBERTS
10/13/2015	10/13/2015

0' 20' 40'

NAD 83/
NA 2011

BEGIN PROJECT 17BPJ4.RJ14
-L- Sta. 11+00.00

BEGIN CULVERT
-L- STA.12+33.52

℄ STA. 12+48.53 -L-
PROP. 24'-0" X 6'-0" X 51'-0"
PRECAST CONCRETE ARCH CULVERT
GP. ELEV. 2,111.74
SKEW 60° 00' 00"

END CULVERT
-L- STA.12+63.60

SPECIAL LATERAL V DITCH
SEE DETAIL A

-L- POC Sta. 13+85.00 =
-DWY2- Sta.10+00.00

-L- POC Sta. 13+80.00 =
-DWY- POT Sta. 10+00.00

-L- POC Sta. 12+80.47 =
-DWY1- Sta.10+00.00

-L- PC Sta. 10+70.78

-L- PT Sta. 11+95.43

-L- PC Sta. 12+51.50

-L- POT Sta. 10+00.00

-L- POT Sta. 10+71.14

-L- PT Sta. 15+04.66

-L- POT Sta. 15+65.45

END PROJECT 17BPJ4.RJ14
-L- Sta. 14+00.00

N 69° 41' 00.0" W

N 41° 07' 00.0" W

N 58° 30' 16.6" E

N 22° 24' 00.0" W

FROM -L- STATION 10+90 TO 12+00 RT
MAINTAIN EXIST.DITCH (GRADE TO DRAIN
AS NEEDED) TO TRANSITION
TO EXIST.PAVEMENT & TO AVOID ROCK CUT
(SEE CROSS-SECTIONS)

50' TRANSITION
TO EXIST.PAVE.

REMOVE AND
RESET B/W FENCE

CLASS II RIP RAP
(STRUCTURES PAY ITEM)

WATER FALL
DO NOT DISTURB

GRAU 350
TYPE TL-2

BM #2 ELEV=2107.76'
-BL- STA. 8+71.14 16.16' LT
NAIL IN BASE OF 12" WALNUT

BM #3 ELEV=2135.88'
-BL- STA. 11+86.94 27.16' LT
NAIL IN BASE OF 14" PINE

BM #1 ELEV=2108.32'
-BL- STA. 5+13.65 122.90' RT
NAIL IN BASE OF 16" POPLAR

JERRY M. GREEN
DB V-18 PG 565

KEITH A. DODGE, JR., ET AL
DB X-33 PG 287

CRAIG HASTINGS, ET AL
DB F-34 PG 1543

FRED JONES
DB J-35 PG 929

NCIOI, LLC
DB P-28 PG 1765

J. CURTIS GREEN, ET AL
DB R-27 PG 483

WALLACE BRANCH

PRESSLEY RD.

SR 1471 16' BST

SR 1425 18' BST
PRESSLEY CIRCLE RD.

WOODS

CONC RESERVOIR

DENOTES PAVEMENT REMOVAL

DETAIL A
SPECIAL LATERAL 'V' DITCH
(Not to Scale)

Natural Ground — 2:1 — D — 3:1 or Flatter — Fill Slope

Min. D = 1.0 Ft.

FROM -L- STA. 12 + 90 TO STA. 13 + 70 -LT-

CURVE DATA FOR -L-

PI Sta 11+34.43	PI Sta 13+79.22
Δ = 28° 34' 00.0" (RT)	Δ = 18° 43' 00.0" (RT)
D = 22° 55' 05.9"	D = 7° 23' 34.8"
L = 124.65'	L = 253.17'
T = 63.65'	T = 127.72'
R = 250.00'	R = 775.00'
Se = 0.06	Se = 0.04
RO = EXIST.	RO = EXIST.

SEE SHEET 5 FOR PROFILE
SEE SHEETS C-1 THRU C-8 FOR CULVERT PLANS

THE LOUIS BERGER GROUP, Inc.
1001 Wade Avenue, Suite 400
Raleigh, NC 27605-3322

ROADWAY PLANS

REVISIONS

10/6/2015 9:20:39 AM
G:\CKE Projects\CKE21004 Limited Services Division Offices\Group 3\550217\Roadway\Proj\550217_RDY_04_PSH.dgn
G:\CADD\Plot\CKE21004\CKE21004_rdy.tbl

DocuSign Envelope ID: ABF288D9-FBA7-414C-8697-6D7C3644DFD4

THE LOUIS BERGER GROUP, Inc.
1001 Wade Avenue, Suite 400
Raleigh, North Carolina 27605

PROJECT REFERENCE NO.	SHEET NO.
17BPJ4.R.I14	5

ROADWAY DESIGN ENGINEER
NORTH CAROLINA PROFESSIONAL SEAL 031972 ENGINEER
ABB6E8F161282AF9...
10/13/2015

HYDRAULICS ENGINEER
NORTH CAROLINA PROFESSIONAL SEAL 032134 ENGINEER
11DD3AEA05BA4B5...
10/13/2015

HORIZONTAL 0 20 40
VERTICAL 0 4 8

HYDRAULIC DATA

DESIGN DISCHARGE	= 650	CFS
DESIGN FREQUENCY	= 25	YRS
DESIGN HW ELEVATION	= 2108.3	FT
BASE DISCHARGE	= 900	CFS
BASE FREQUENCY	= 100	YRS
BASE HW ELEVATION	= 2110.26	FT
OVERTOPPING DISCHARGE	= 1230	CFS
OVERTOPPING FREQUENCY	= 500+	YRS
OVERTOPPING ELEVATION	= 2112.1	FT
DATE OF SURVEY	= SEPT. 2013	
W.S. ELEVATION AT DATE OF SURVEY	= 2103.8	FT

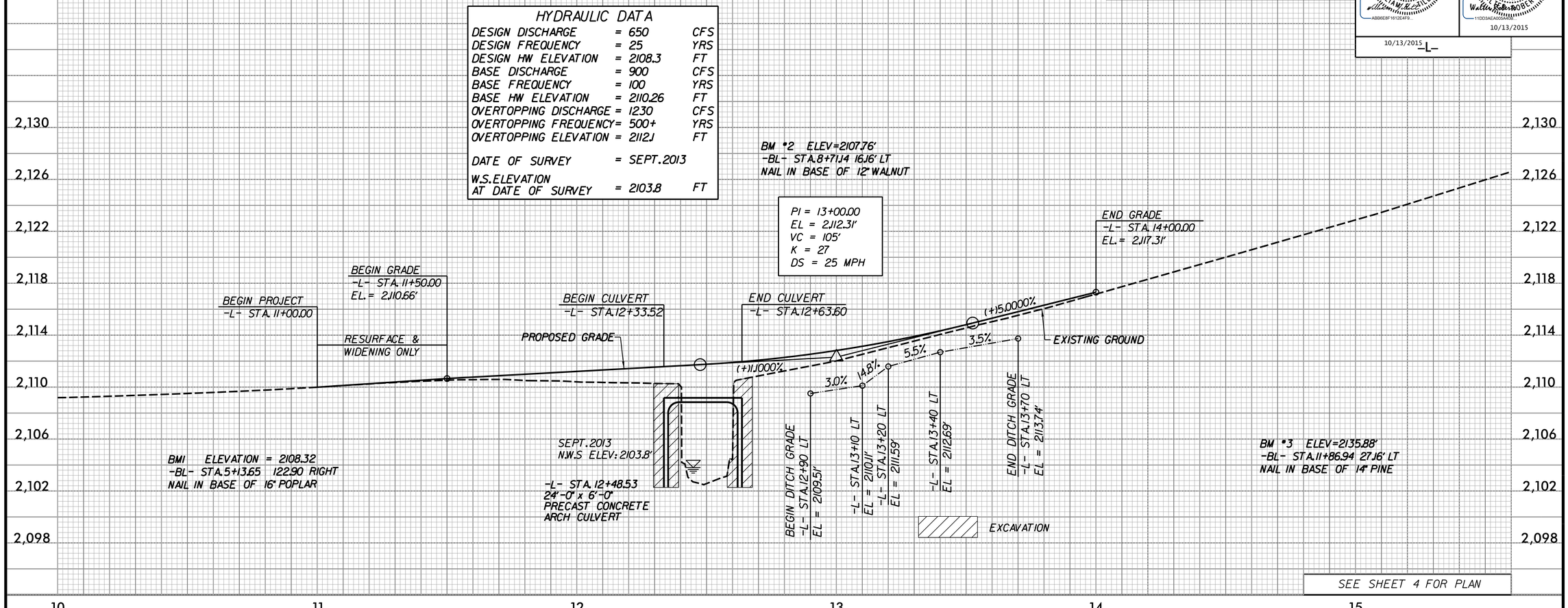

SEE SHEET 4 FOR PLAN

-DWY-

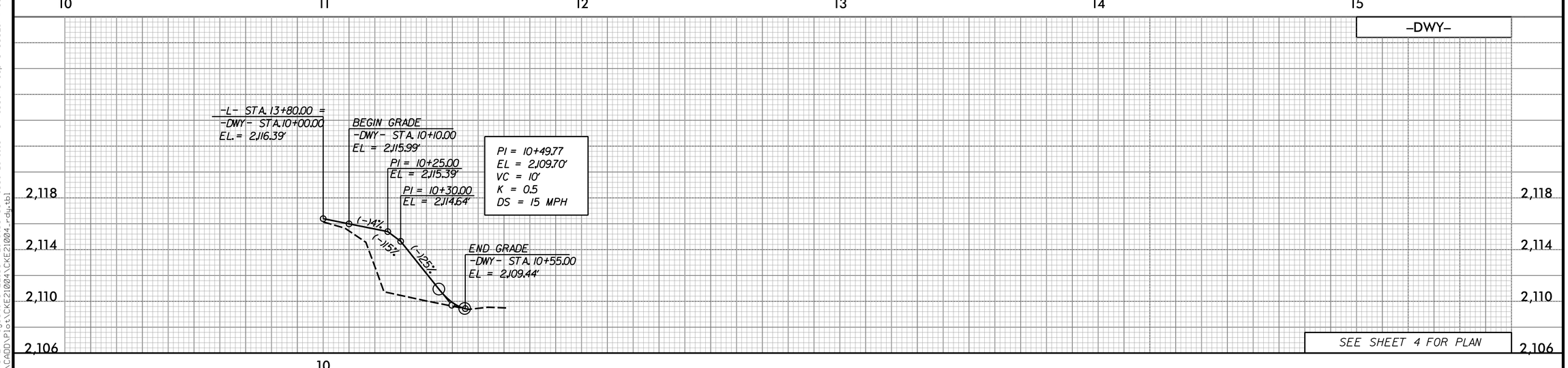

SEE SHEET 4 FOR PLAN

10/6/2015 9:29:41 AM
G:\CKE Projects\CKE21004 Limited Services Division Offices\Group 3\550217\Roadway\Proj\550217_RDY_05_PFL.dgn
G:\CADD\Plot\CKE21004\CKE21004_rdy.tbl

DocuSign Envelope ID: B8CE8E33-0CB6-4251-B866-2FF80E780EB3

STATE OF NORTH CAROLINA
DIVISION OF HIGHWAYS

TRANSPORTATION MANAGEMENT PLAN

MACON COUNTY

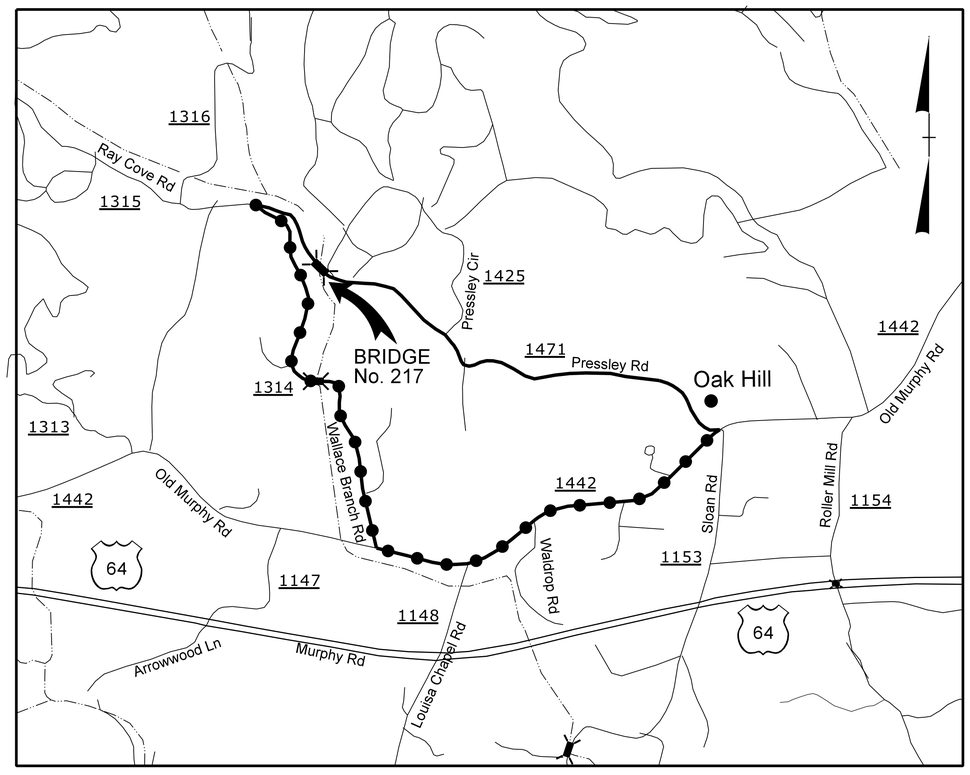

VICINITY MAP NTS

OFF-SITE DETOUR

LOCATION: BRIDGE NO. 217 ON SR 1471 OVER WALLACE BRANCH

WORK ZONE SAFETY & MOBILITY
"from the MOUNTAINS to the COAST"

N.C.D.O.T. WORK ZONE TRAFFIC CONTROL
1561 MAIL SERVICE CENTER (MSC) RALEIGH, NC 27699-1561
750 N. GREENFIELD PARKWAY, GARNER, NC 27529 (DELIVERY)
PHONE: (919) 773-2800 FAX: (919) 771-2745

J. S. BOURNE, PE — *STATE TRAFFIC MANAGEMENT ENGINEER*
D. HATFIELD, PE — *TRAFFIC CONTROL PROJECT ENGINEER*
F. SIKES, EI — *TRAFFIC CONTROL PROJECT DESIGN ENGINEER*

DIVISION OF HIGHWAYS · STATE OF NORTH CAROLINA · DEPARTMENT OF TRANSPORTATION · WORK ZONE TRAFFIC CONTROL

INDEX OF SHEETS

SHEET NO.	TITLE
TMP-1	TITLE SHEET, VICINITY MAP AND INDEX OF SHEETS
TMP-1A	LIST OF APPLICABLE ROADWAY STANDARD DRAWINGS, LEGEND, GENERAL NOTES, AND TRANSPORTATION OPERATIONS
TMP-2	SPECIAL SIGN DESIGN
TMP-3	TEMPORARY TRAFFIC CONTROL DETAIL, PHASING NOTES, OFFSITE DETOUR SIGNING AND ROAD CLOSURE

Prepared in the Office of:
THE LOUIS BERGER GROUP, Inc.
1001 Wade Avenue, Suite 400
Raleigh, North Carolina 27605
License No.: F-0840

DEAN D. HATFIELD, PE
PROJECT ENGINEER

FARRELL E. SIKES, EI
PROJECT DESIGN ENGINEER

APPROVED:
DATE:

SEAL

NORTH CAROLINA PROFESSIONAL SEAL 16003 ENGINEER DEAN D. HATFIELD

DocuSigned by: Dean D. Hatfield 10/13/2015

SHEET NO.
TMP-1

PROJECT: 17BP.14.R.114

10/6/2015 9:20:42 AM
G:\CKE Projects\CKE2004 Limited Services Division Offices\Group 3\550217\Roadway\Proj\550217_RDY_06_TMP1.dgn
CKE2004_rdy-pmo.tbl

DocuSign Envelope ID: B8CE8E33-0CB6-4251-B866-2FF80E780EB3

PROJ. REFERENCE NO.	SHEET NO.
17BP.14.R.114	TMP-1A

ROADWAY STANDARD DRAWINGS

THE FOLLOWING ROADWAY STANDARDS AS APPEAR IN "ROADWAY STANDARD DRAWINGS" - PROJECT SERVICES UNIT - N.C. DEPARTMENT OF TRANSPORTATION - RALEIGH, N.C., DATED JANUARY 2012 ARE APPLICABLE TO THIS PROJECT AND BY REFERENCE HEREBY ARE CONSIDERED A PART OF THESE PLANS:

STD. NO.	TITLE
1101.01	WORK ZONE WARNING SIGNS
1101.03	TEMPORARY ROAD CLOSURES
1101.05	WORK ZONE VEHICLE ACCESSES
1101.11	TRAFFIC CONTROL DESIGN TABLES
1110.01	STATIONARY WORK ZONE SIGNS
1130.01	DRUMS
1145.01	BARRICADES
1150.01	FLAGGING DEVICES

LEGEND

GENERAL

NORTH ARROW

TEMPORARY PAVEMENT MARKING

N/A

TRAFFIC CONTROL DEVICES

BARRICADE (TYPE III)

TEMPORARY SIGNING

STATIONARY SIGN

TRANSPORTATION OPERATIONS

CONSTRUCTION
REMOVE AND REPLACE EXISTING STRUCTURE AND APPROACHES ALONG THE EXISTING ROADWAY ALIGNMENT AS SHOWN IN THE CONSTRUCTION PLANS.

TMP PARAMETERS
TRAFFIC WILL BE DETOURED OFF-SITE DURING THE CONSTRUCTION PERIOD ALONG A ROUTE DETERMINED BY NCDOT.

THE OFF-SITE DETOUR WILL INCLUDE SR 1471 (PRESSLEY ROAD) 1314 (WALLACE BRANCH ROAD) & SR 1442 (OLD MURPHY ROAD).

GENERAL NOTES

CHANGES MAY BE REQUIRED WHEN PHYSICAL DIMENSIONS IN THE DETAIL DRAWINGS, STANDARD DETAILS, AND ROADWAY DETAILS ARE NOT ATTAINABLE TO MEET FIELD CONDITIONS OR RESULT IN DUPLICATE OR UNDESIRED OVERLAPPING OF DEVICES. MODIFICATION MAY INCLUDE: MOVING, SUPPLEMENTING, COVERING, OR REMOVAL OF DEVICES AS DIRECTED BY THE ENGINEER.

THE FOLLOWING GENERAL NOTES APPLY AT ALL TIMES FOR THE DURATION OF THE CONSTRUCTION PROJECT EXCEPT WHEN OTHERWISE NOTED IN THE PLAN OR DIRECTED BY THE ENGINEER.

TRAFFIC PATTERN ALTERATIONS

A) NOTIFY THE ENGINEER TWENTY ONE (21) CALENDAR DAYS PRIOR TO ANY TRAFFIC PATTERN ALTERATION.

SIGNING

B) PROVIDE SIGNING AND DEVICES REQUIRED TO CLOSE THE ROAD ACCORDING TO THE ROADWAY STANDARD DRAWINGS AND TRAFFIC CONTROL PLANS.

PROVIDE SIGNING REQUIRED FOR THE OFF-SITE DETOUR ROUTE AS SHOWN IN THE TRAFFIC CONTROL PLANS.

C) COVER OR REMOVE ALL SIGNS AND DEVICES REQUIRED TO CLOSE THE ROAD WHEN ROAD CLOSURE IS NOT IN OPERATION.

COVER OR REMOVE ALL SIGNS REQUIRED FOR THE OFF-SITE DETOUR WHEN THE DETOUR IS NOT IN OPERATION.

D) ENSURE ALL NECESSARY SIGNING IS IN PLACE PRIOR TO ALTERING ANY TRAFFIC PATTERN.

TRAFFIC CONTROL DEVICES

E) PLACE TYPE III BARRICADES, WITH "ROAD CLOSED" SIGN R11-2 ATTACHED, OF SUFFICIENT LENGTH TO CLOSE ENTIRE ROADWAY.

PAVEMENT MARKINGS AND MARKERS

F) TIE PROPOSED PAVEMENT MARKING LINES TO EXISTING PAVEMENT MARKING LINES.

APPROVED:_____ DATE:_____

SEAL

NORTH CAROLINA PROFESSIONAL SEAL 16003 ENGINEER DEAN D. HATFIELD

DocuSigned by: Dean D. Hatfield 10/13/2015

DIVISION OF HIGHWAYS STATE OF NORTH CAROLINA DEPARTMENT OF TRANSPORTATION WORK ZONE TRAFFIC CONTROL

LIST OF APPLICABLE ROADWAY STANDARD DRAWINGS, LEGEND, GENERAL NOTES, AND TRANSPORTATION OPERATIONS

10/6/2015 9:20:43 AM
CKE2004 rdy-pnc1
G:\CKE Projects\CKE2004 Limited Services Division Offices\Group 3\550217\Roadway\Proj\550217_RDY_06_TMPIA.dgn

DocuSign Envelope ID: B8CE8E33-0CB6-4251-B866-2FF80E780EB3

PROJ. REFERENCE NO.	SHEET NO.
17BP.14.R.114	TMP-2

SPECIAL SIGN DETAIL

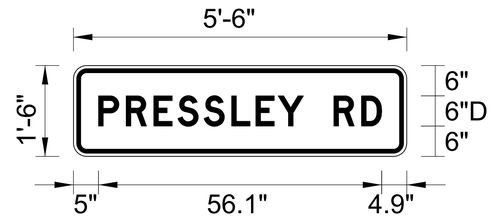

BORDER
R=2"
TH=0.83"
IN=0.63"
BLACK ON FLUORESCENT ORANGE

LETTER POSITIONS

	P	R	E	S	S	L	E	Y		R	D	
5	5.4	5.5	4.8	5.2	5.4	4.8	4.4	5.1	6	5.4	4.1	4.9

NOTE:

1. LETTER SPACING'S ARE TO START OF NEXT LETTER.
2. LEGEND AND BORDER SHALL BE DIRECT APPLIED BLACK NON -REFLECTIVE SHEETING.
3. BACKGROUND SHALL BE TYPE VII, VIII, OR IX (PRISMATIC) FLUORESCENT ORANGE RETRO REFLECTIVE SHEETING.

APPROVED:_____ DATE:_____

SEAL

NORTH CAROLINA PROFESSIONAL SEAL 16003 ENGINEER DEAN D. HATFIELD

DocuSigned by: Dean D. Hatfield 10/13/2015

DIVISION OF HIGHWAYS STATE OF NORTH CAROLINA DEPARTMENT OF TRANSPORTATION WORK ZONE TRAFFIC CONTROL

SPECIAL SIGN DESIGN

10/6/2015 9:20:45 AM
$PENTBL$
G:\CKE Projects\CKE21004 Limited Services Division Offices\Group 3\550217\Roadway\Proj\550217_RDY_06_TMP2.dgn

DocuSign Envelope ID: B8CE8E33-0CB6-4251-B866-2FF80E780EB3

PROJ. REFERENCE NO.	SHEET NO.
17BP.14.R.114	TMP-3

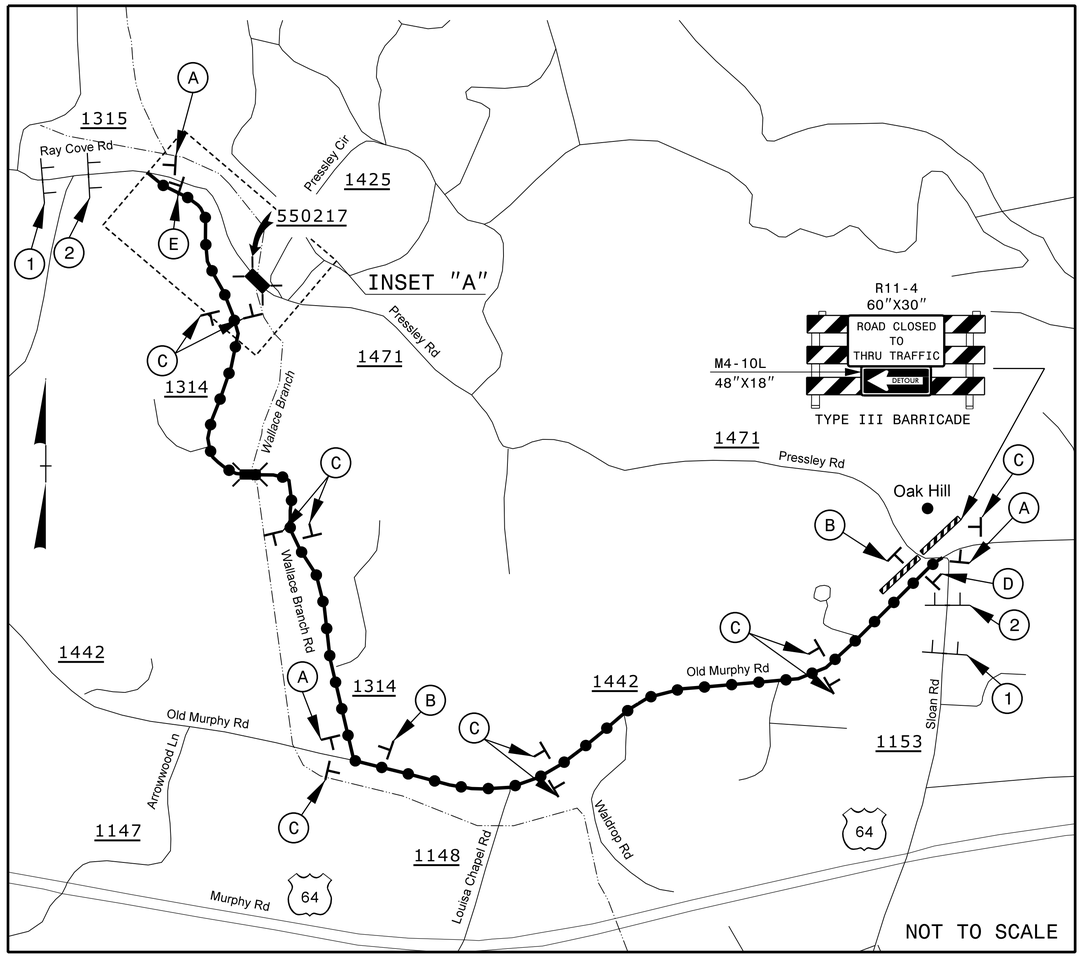

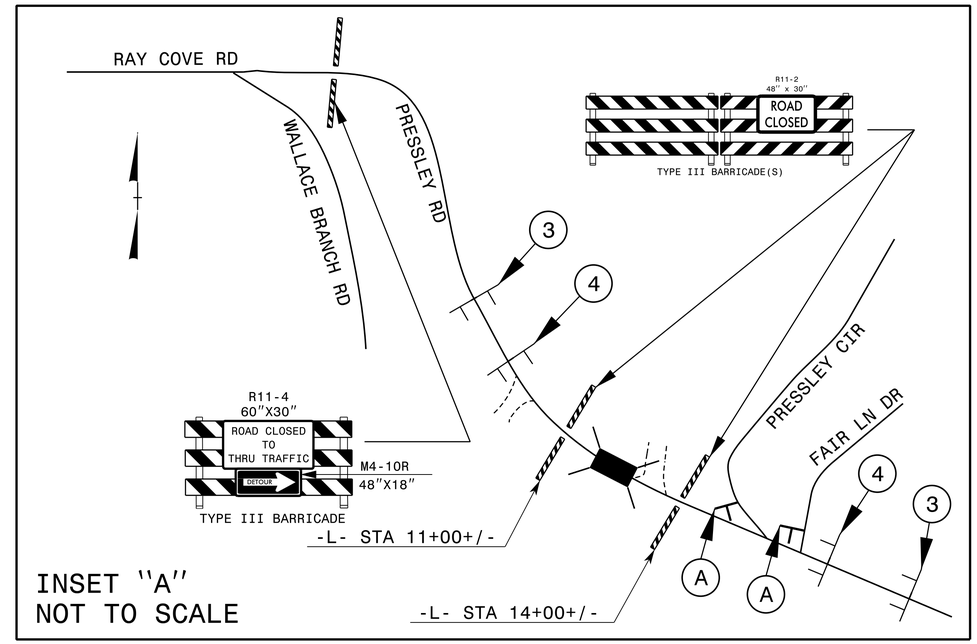

PROJECT PHASING

STEP 1:
- INSTALL OFF SITE DETOUR AND ROAD CLOSURE SIGNING (PROVIDED BY CONTRACTOR).

- USING RDWY STD 1101.03, SHEET 1 OF 9, CLOSE SR 1471 (PRESSLEY ROAD) TO THRU TRAFFIC AND PLACE TRAFFIC ONTO OFF SITE DETOUR AS SHOWN ABOVE.

STEP 2:
- REMOVE EXISTING BRIDGE No. 217 AND APPROACHES AND CONSTRUCT THE PROPOSED CULVERT AND ROADWAY UP TO AND INCLUDING THE FINAL LAYER OF SURFACE COURSE FROM -L- STA. 11+00+/- TO -L- STA. 14+00+/-. PLACE FINAL PAVEMENT MARKINGS ON SR 1471 (PRESSLEY ROAD) FROM -L- STA. 11+00+/- TO -L- STA. 14+00+/-. (SEE CONSTRUCTION PLANS).

STEP 3:
- REMOVE ALL TRAFFIC CONTROL DEVICES, SIGNING AND DETOUR ROUTE SIGNING. OPEN SR 1471 (PRESSLEY ROAD) TO FINAL TRAFFIC PATTERN.

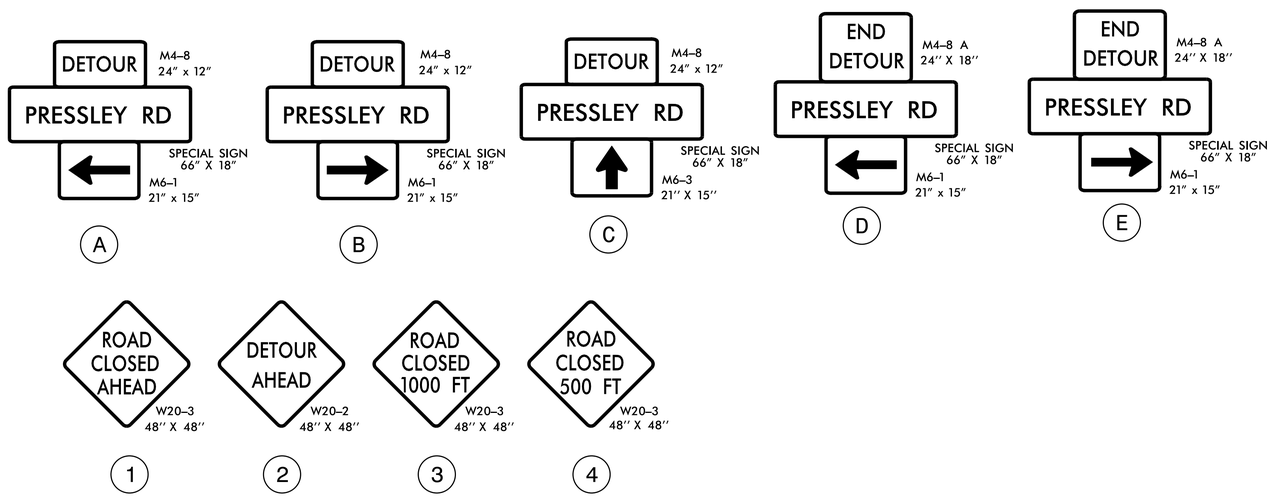

NOTE:
- ALL DETOUR SIGNS LOCATIONS ARE APPROXIMATE.
- ALL DETOUR SIGNS ARE BLACK ON ORANGE UNLESS OTHERWISE NOTED.
- TRAFFIC CONTROL DEVICES A THRU E SHALL BE INSTALLED AS PER ENGINEER'S INSTRUCTIONS AND AS SHOWN.
- TRAFFIC CONTROL DEVICES 1 THRU 4 SHALL BE INSTALLED ACCORDING TO ROADWAY STANDARD DRAWING 1101.03 SHEET 1 OF 9.
- ACCESS TO DRIVEWAY AT STA. 12+30 RT IS PROHIBITED DURING CONSTRUCTION. ACCESS TO PROPERTY WILL BE FROM PRESSLEY CIRCLE ROAD.

THE LOUIS BERGER GROUP, Inc.
1001 Wade Avenue, Suite 400
Raleigh, North Carolina 27605

APPROVED:_____ DATE:_____

SEAL

NORTH CAROLINA PROFESSIONAL SEAL 16003 ENGINEER DEAN D. HATFIELD

DocuSigned by: Dean D. Hatfield
10/13/2015

DIVISION OF HIGHWAYS · STATE OF NORTH CAROLINA · DEPARTMENT OF TRANSPORTATION · WORK ZONE TRAFFIC CONTROL

TEMPORARY TRAFFIC CONTROL DETAIL, PHASING NOTES, OFFSITE DETOUR SIGNING AND ROAD CLOSURE

10/6/2015 9:20:46 AM
G:\CKE Projects\CKE2004 Limited Services Division Offices\Group 3\55021\Roadway\Proj\55021_RDY_06_TMP3.dgn
$PENTBL$

DocuSign Envelope ID: 930F91EF-F3EC-4F5D-9250-B68FBAE3E461

STATE	PROJECT NO.	SHEET NO.	TOTAL SHTS.
N.C.	17BP.14.R.114	PMP-1	1

APPROVED: _____

DATE: _____

SEAL

NORTH CAROLINA PROFESSIONAL SEAL 16003 ENGINEER DEAN D. HATFIELD

DocuSigned by: Dean D. Hatfield 820D389A07...

10/13/2015

STATE OF NORTH CAROLINA
DEPARTMENT OF TRANSPORTATION

PAVEMENT MARKING PLANS
MACON COUNTY

LOCATION: BRIDGE NO. 217 ON SR 1471 OVER WALLACE BRANCH

ROADWAY STANDARD DRAWINGS

THE FOLLOWING ROADWAY STANDARDS AS APPEAR IN "ROADWAY STANDARD DRAWINGS"-ROADWAY DESIGN UNIT-N.C. DEPARTMENT OF TRANSPORTATION-RALEIGH, N.C., DATED JANUARY 2012 ARE APPLICABLE TO THIS PROJECT AND BY REFERENCE HEREBY ARE CONSIDERED A PART OF THESE PLANS:

STD. NO.	TITLE
1205.01	PAVEMENT MARKINGS - LINE TYPES AND OFFSETS
1205.02	PAVEMENT MARKINGS - TWO-LANE AND MULTI-LANE ROADWAYS

PAVEMENT MARKING SCHEDULE

ASPHALT PAVEMENT DESIGN
(AS SHOWN)

PAVEMENT MARKING LINES

PA - PAINT - WHITE EDGELINE (4")
PI - PAINT - YELLOW DOUBLE CENTER (4")

GENERAL NOTES

THE FOLLOWING NOTES APPLY AT ALL TIMES FOR THE DURATION OF THE CONSTRUCTION PROJECT, EXCEPT WHEN NOTED IN THE PLAN, OR DIRECTED BY THE ENGINEER.

A) INSTALL PAVEMENT MARKINGS AND PAVEMENT MARKERS ON THE FINAL SURFACE AS FOLLOWS:

ROAD NAME	MARKING	MARKER
-L-	PAINT	NONE

B) PLACE TWO APPLICATIONS OF PAINT PAVEMENT MARKINGS ON THE FINAL WEARING SURFACE, PLACE THE SECOND APPLICATION OF PAINT UPON SUFFICIENT DRYING TIME OF THE FIRST.

C) TIE PROPOSED PAVEMENT MARKING LINES TO EXISTING PAVEMENT MARKING LINES.

E) REMOVE/REPLACE ANY CONFLICTING/DAMAGED PAVEMENT MARKINGS AND MARKERS.

PAVEMENT MARKING DETAIL

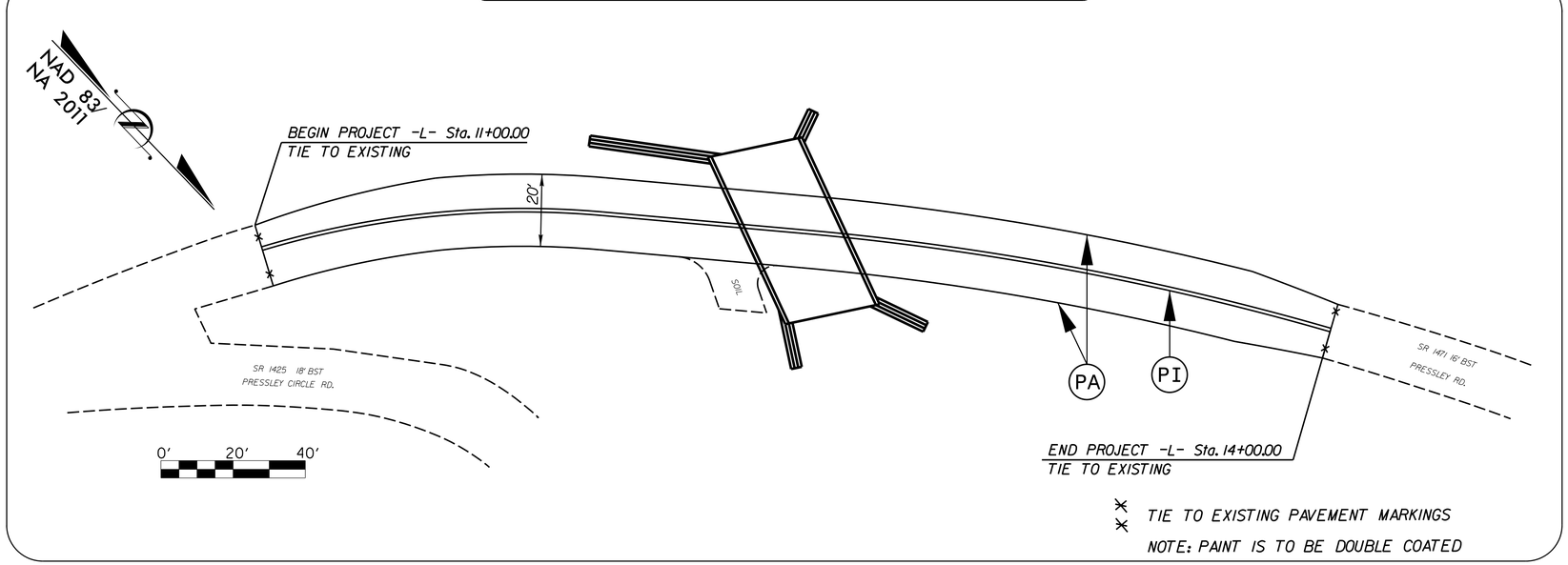

INDEX

SHEET NO.	DESCRIPTION
PMP-1	PAVEMENT MARKING PLAN TITLE, SCHEDULE, AND PAVEMENT MARKING DETAIL

THE LOUIS BERGER GROUP, Inc.
1001 Wade Avenue, Suite 400
Raleigh, NC 27605-3322

ROADWAY PLANS

10/6/2015 9:20:47 AM
G:\CKE Projects\CKE21004 Limited Services Division Offices\Group 3\550217\Roadway\Proj\550217_RDY_07_PMP_01.dgn
CKE21004_rdy_pmp.tbl

0' 20' 40'	PROJECT REFERENCE NO.	SHEET NO.
	17BP.14.R.114	EC-1
	R/W SHEET NO.	

EROSION CONTROL

NOTES:

ANY DEVIATION FROM OPTIONS GIVEN WILL REQUIRE PRIOR APPROVAL BY ENGINEER.

ADDITIONAL EROSION CONTROL DEVICES MAY NEED TO BE INSTALLED AS DIRECTED BY THE ENGINEER.

NAD 83/ NA 2011

ENVIRONMENTALLY SENSITIVE AREA(S) EXIST ON THIS PROJECT

Refer To E. C. Special Provisions for Special Considerations.

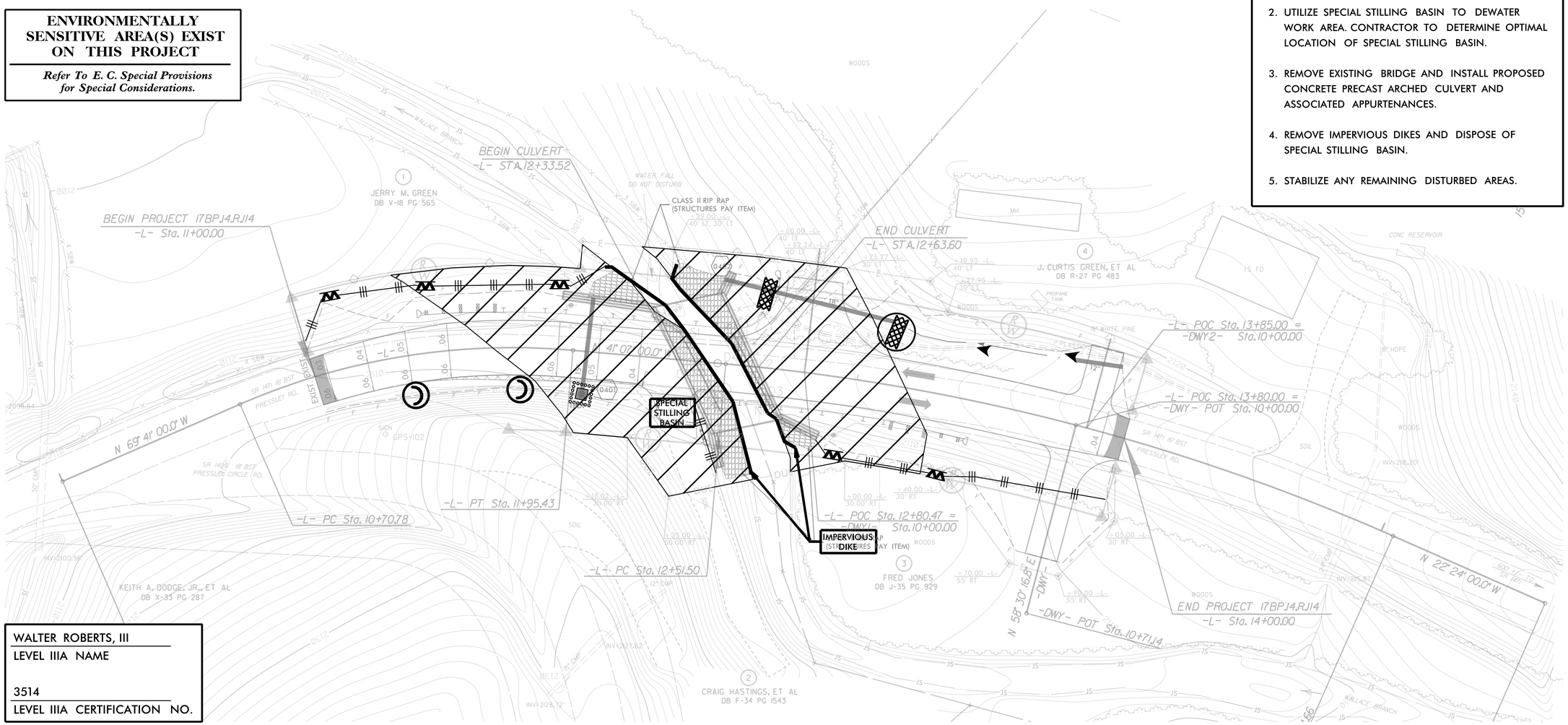

CONSTRUCTION SEQUENCE

1. INSTALL IMPERVIOUS DIKES AS SHOWN ON PLANS.
2. UTILIZE SPECIAL STILLING BASIN TO DEWATER WORK AREA. CONTRACTOR TO DETERMINE OPTIMAL LOCATION OF SPECIAL STILLING BASIN.
3. REMOVE EXISTING BRIDGE AND INSTALL PROPOSED CONCRETE PRECAST ARCHED CULVERT AND ASSOCIATED APPURTENANCES.
4. REMOVE IMPERVIOUS DIKES AND DISPOSE OF SPECIAL STILLING BASIN.
5. STABILIZE ANY REMAINING DISTURBED AREAS.

WALTER ROBERTS, III
LEVEL IIIA NAME

3514
LEVEL IIIA CERTIFICATION NO.

Roadway Standard Drawings

The following roadway english standards as appear in "Roadway Standard Drawings"– Roadway Design Unit – N. C. Department of Transportation – Raleigh, N. C., dated January 2012 and the latest revison thereto are applicable to this project and by reference hereby are considered a part of these plans.

1604.01	Railroad Erosion Control Detail	1632.01	Rock Inlet Sediment Trap Type A
1605.01	Temporary Silt Fence	1632.02	Rock Inlet Sediment Trap Type B
1606.01	Special Sediment Control Fence	1632.03	Rock Inlet Sediment Trap Type C
1607.01	Gravel Construction Entrance	1633.01	Temporary Rock Silt Check Type A
1622.01	Temporary Berms and Slope Drains	1633.02	Temporary Rock Silt Check Type B
1630.01	Riser Basin	1634.01	Temporary Rock Sediment Dam Type A
1630.02	Silt Basin Type B	1634.02	Temporary Rock Sediment Dam Type B
1630.03	Temporary Silt Ditch	1635.01	Rock Pipe Inlet Sediment Trap Type A
1630.04	Stilling Basin	1635.02	Rock Pipe Inlet Sediment Trap Type B
1630.05	Temporary Diversion	1640.01	Coir Fiber Baffle
1630.06	Special Stilling Basin	1645.01	Temporary Stream Crossing
1631.01	Matting Installation		

ROADSIDE ENVIRONMENTAL UNIT
DEPARTMENT OF TRANSPORTATION
DIVISION OF HIGHWAYS
RALEIGH, N.C.

2012 STANDARD SPECIFICATIONS

THESE EROSION AND SEDIMENT CONTROL PLANS COMPLY WITH THE REGULATIONS SET FORTH BY THE NCG-010000 GENERAL CONSTRUCTION PERMIT EFFECTIVE AUGUST 3, 2011 ISSUED BY THE NORTH CAROLINA DEPARTMENT OF ENVIRONMENT AND NATURAL RESOURCES DIVISION OF WATER QUALITY.

EROSION AND SEDIMENT CONTROL MEASURES

Std. #	Description	Symbol
1605.01	Temporary Silt Fence	
1606.01	Special Sediment Control Fence	
1630.06	Special Stilling Basin	
1632.03	Rock Inlet Sediment Trap: Type C	
1633.01	Temporary Rock Silt Check Type-A	
1633.02	Temporary Rock Silt Check Type-B	
	Wattle / Coir Fiber Wattle with Polyacrylamide (PAM)	

TROUT STREAM BUFFER ZONE

THE LOUIS BERGER GROUP, Inc.
1001 Wade Avenue, Suite 400
Raleigh, NC 27605-3322

ROADWAY PLANS

REVISIONS

10/6/2015 9:20:49 AM
G:\CKE Projects\CKE21004 Limited Services Division Offices\Group 3\550217\Roadway\Proj\550217_RDY_08_EC1.dgn
G:\CADD\Plot\CKE21004\Group 3\CKE21004_Group3_rdy_EC.tbl

PROJECT REFERENCE NO.	SHEET NO.
17BP.14.R.14	EC-2
R/W SHEET NO.	

STATE OF NORTH CAROLINA
DIVISION OF HIGHWAYS

SOIL STABILIZATION TIMEFRAMES

SITE DESCRIPTION	STABILIZATION TIME	TIMEFRAME EXCEPTIONS
PERIMETER DIKES, SWALES, DITCHES AND SLOPES	7 DAYS	NONE
HIGH QUALITY WATER (HOW) ZONES	7 DAYS	NONE
SLOPES STEEPER THAN 3:1	7 DAYS	IF SLOPES ARE 10' OR LESS IN LENGTH AND ARE NOT STEEPER THAN 2:1, 14 DAYS ARE ALLOWED.
SLOPES 3:1 OR FLATTER	14 DAYS	7 DAYS FOR SLOPES GREATER THAN 50' IN LENGTH.
ALL OTHER AREAS WITH SLOPES FLATTER THAN 4:1	14 DAYS	NONE, EXCEPT FOR PERIMETERS AND HOW ZONES.

REVISIONS

10/6/2015 9:20:51 AM
G:\CKE Projects\CKE21004 Limited Services Division Offices\Group 3\550217\Roadway\Proj\550217_RDY_08_EC2.dgn
G:\CADD\Plots\CKE21004\Group 3\CKE21004_Group3_rdy_EC.tbl

THE LOUIS BERGER GROUP, Inc.
1001 Wade Avenue, Suite 400
Raleigh, NC 27605-3322

ROADWAY PLANS

PROJECT REFERENCE NO.	SHEET NO.
17BP.14.R.114	EC-3
R/W SHEET NO.	

WATTLE WITH POLYACRYLAMIDE (PAM) DETAIL

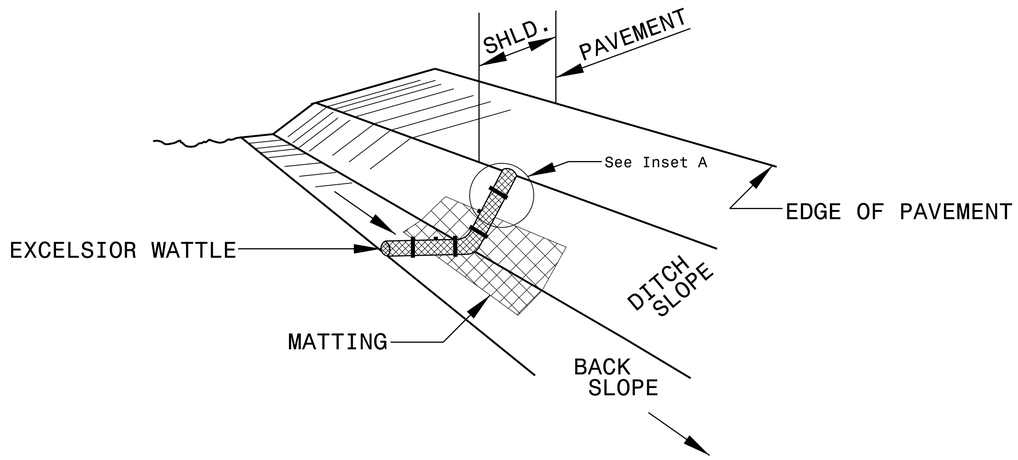

ISOMETRIC VIEW

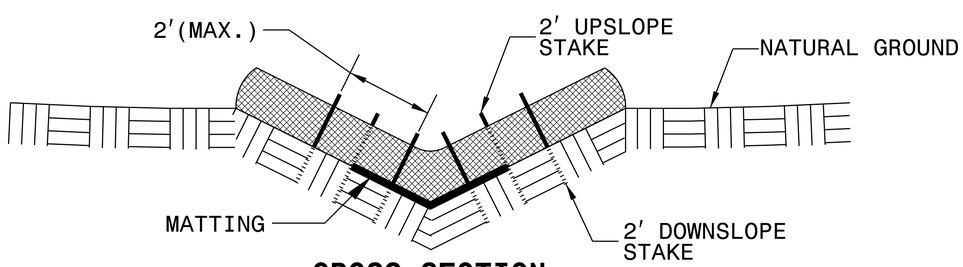

CROSS SECTION VEE DITCH

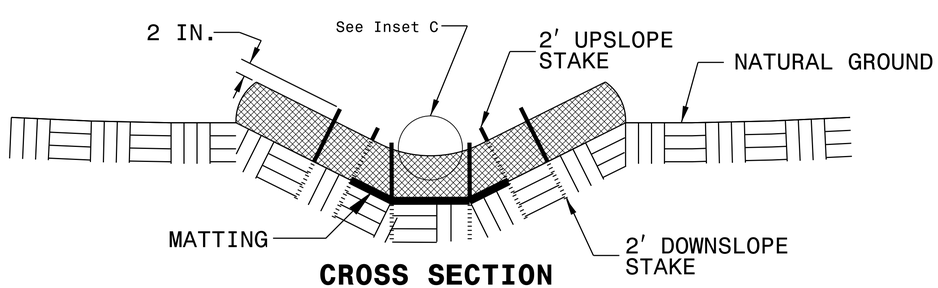

CROSS SECTION TRAPEZOIDAL DITCH

NOTES:

USE MINIMUM 12 IN. DIAMETER EXCELSIOR WATTLE.

USE 2 FT. WOODEN STAKES WITH A 2 IN. BY 2 IN. NOMINAL CROSS SECTION.

ONLY INSTALL WATTLE(S) TO A HEIGHT IN DITCH SO FLOW WILL NOT WASH AROUND WATTLE AND SCOUR DITCH SLOPES AND AS DIRECTED.

INSTALL A MINIMUM OF 2 UPSLOPE STAKES AND 4 DOWNSLOPE STAKES AT AN ANGLE TO WEDGE WATTLE TO BOTTOM OF DITCH.

PROVIDE STAPLES MADE OF 0.125 IN. DIAMETER STEEL WIRE FORMED INTO A U SHAPE NOT LESS THAN 12" IN LENGTH.

INSTALL STAPLES APPROXIMATELY EVERY 1 LINEAR FOOT ON BOTH SIDES OF WATTLE AND AT EACH END TO SECURE IT TO THE SOIL.

INSTALL MATTING IN ACCORDANCE WITH SECTION 1631 OF THE STANDARD SPECIFICATIONS.

PRIOR TO POLYACRYLAMIDE (PAM) APPLICATION, OBTAIN A SOIL SAMPLE FROM PROJECT LOCATION, AND FROM OFFSITE MATERIAL, AND ANALYZE FOR APPROPRIATE PAM FLOCCULANT TO BE APPLIED TO EACH WATTLE.

INITIALLY APPLY 2 OUNCES OF ANIONIC OR NEUTRALLY CHARGED PAM OVER WATTLE WHERE WATER WILL FLOW AND 1 OUNCE OF PAM ON MATTING ON EACH SIDE OF WATTLE. REAPPLY PAM AFTER EVERY RAINFALL EVENT THAT IS EQUAL TO OR EXCEEDS 0.50 IN.

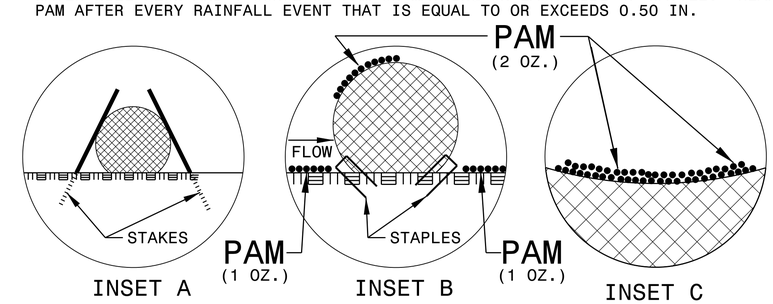

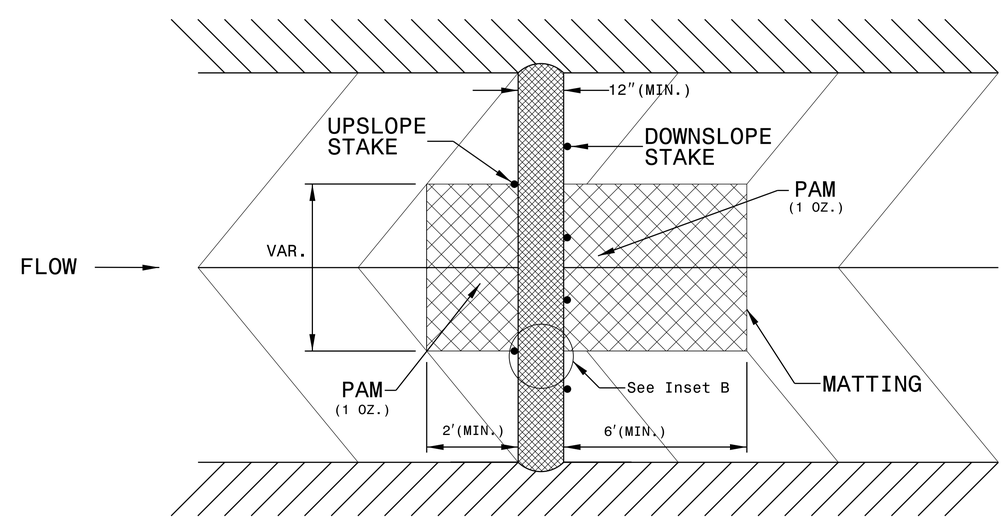

TOP VIEW

THE LOUIS BERGER GROUP, Inc.
1001 Wade Avenue, Suite 400
Raleigh, NC 27605-3322

ROADWAY PLANS

REVISIONS

10/6/2015 9:20:51 AM
G:\CKE Projects\CKE21004 Limited Services Division Offices\Group 3\550217\Roadway\Proj\550217_RDY_08_EC3.dgn
G:\CADD\Plot\CKE21004\Group 3\CKE21004_Group3_rdy_EC.tbl

PROJECT REFERENCE NO.	SHEET NO.
I7BPJ4.RJI4	EC-4
R/W SHEET NO.	

TEMPORARY ROCK SILT CHECK TYPE 'A' WITH EXCELSIOR MATTING AND POLYACRYLAMIDE (PAM)

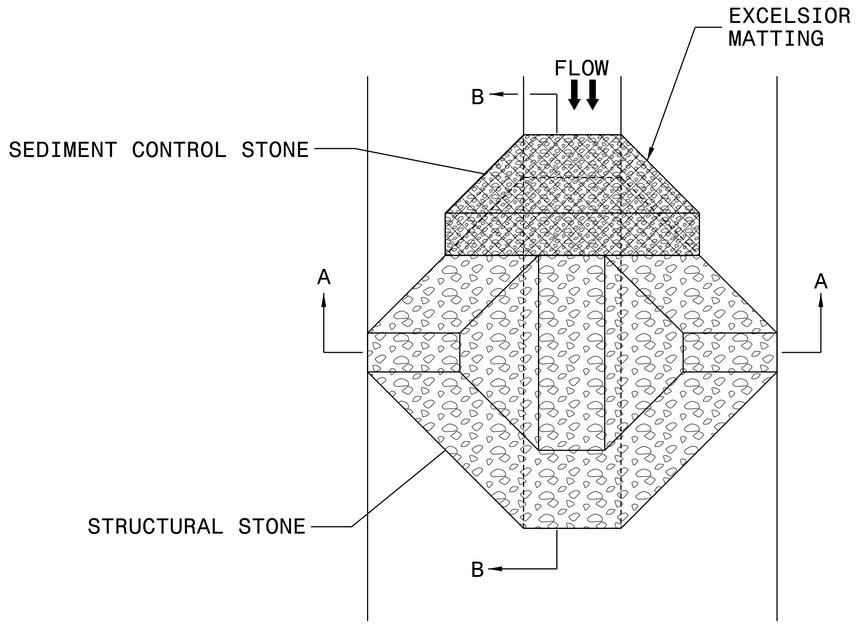

PLAN

NOTES:

INSTALL TEMPORARY ROCK SILT CHECK TYPE A IN ACCORDANCE WITH ROADWAY STANDARD DRAWING NO. 1633.01.

USE EXCELSIOR FOR MATTING MATERIAL AND ANCHOR MATTING SECTION AT TOP AND BOTTOM WITH CLASS B STONE.

PRIOR TO POLYACRYLAMIDE (PAM) APPLICATION, OBTAIN A SOIL SAMPLE FROM PROJECT LOCATION, AND FROM OFFSITE MATERIAL, AND ANALYZE FOR APPROPRIATE PAM FLOCCULANT TO BE APPLIED TO EACH ROCK SILT CHECK.

INITIALLY APPLY 4 OUNCES OF POLYACRYLAMIDE (PAM) TO TOP OF MATTING SECTION AND AFTER EVERY RAINFALL EVENT THAT EQUALS OR EXCEEDS 0.50 INCHES.

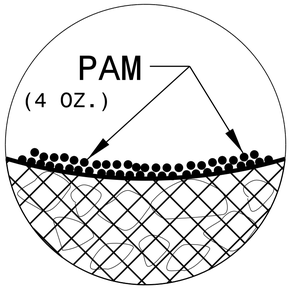

INSET A

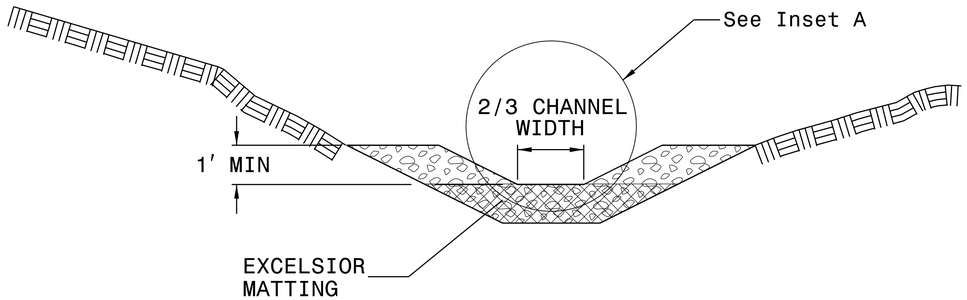

SECTION A-A

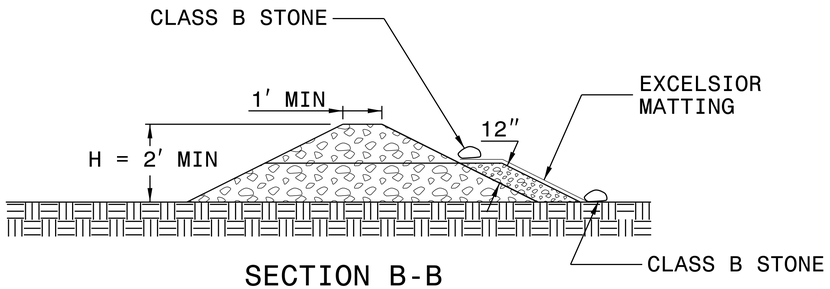

SECTION B-B

NOT TO SCALE

THE LOUIS BERGER GROUP, Inc.
1001 Wade Avenue, Suite 400
Raleigh, NC 27605-3322

ROADWAY PLANS

REVISIONS

10/6/2015 9:20:52 AM
G:\CKE Projects\CKE21004 Limited Services Division Offices\Group 3\550217\Roadway\Proj\550217_RDY_08_EC4.dgn
G:\CADD\Plot\CKE21004\Group 3\CKE21004_Group3_rdy_EC.tbl

PROJECT REFERENCE NO.	SHEET NO.
17BP.14.R.114	EC-5
R/W SHEET NO.	

DIVISION OF HIGHWAYS
STATE OF NORTH CAROLINA

SOIL STABILIZATION SUMMARY SHEET

PERMANENT SOIL REINFORCEMENT MAT

CONST SHEET NO.	LINE	FROM STATION	TO STATION	SIDE	ESTIMATE (SY)
EC-1	-L-	13+10	13+40	LT	20
			SUBTOTAL		20
		ADDITIONAL PSRM TO BE INSTALLED			-
				TOTAL	20
				SAY	20

MATTING FOR EROSION CONTROL

CONST SHEET NO.	LINE	FROM STATION	TO STATION	SIDE	ESTIMATE (SY)
			SUBTOTAL		
MISCELLANEOUS MATTING TO BE INSTALLED AS DIRECTED BY THE ENGINEER					750
				TOTAL	750
				SAY	750

REVISIONS

10/6/2015 9:20:53 AM
G:\CKE Projects\CKE21004 Limited Services Division Offices\Group 3\550217\Roadway\Proj\550217_RDY_08_EC5.dgn
G:\CADD\Plot\CKE21004\Group 3\CKE21004_Group3_rdy_EC.tbl

THE LOUIS BERGER GROUP, Inc.
1001 Wade Avenue, Suite 400
Raleigh, NC 27605-3322

ROADWAY PLANS

09/08/99

TIP PROJECT: 17BP.14.R.114

CONTRACT: DN00275

STATE OF NORTH CAROLINA
DIVISION OF HIGHWAYS

T.I.P. NO.	SHEET NO.
17BP.14.R.114	UO–1

UTILITIES BY OTHERS PLANS
MACON COUNTY

LOCATION: BRIDGE NO. 217 ON SR 1471 OVER WALLACE BRANCH

TYPE OF WORK: UTILITIES BY OTHERS

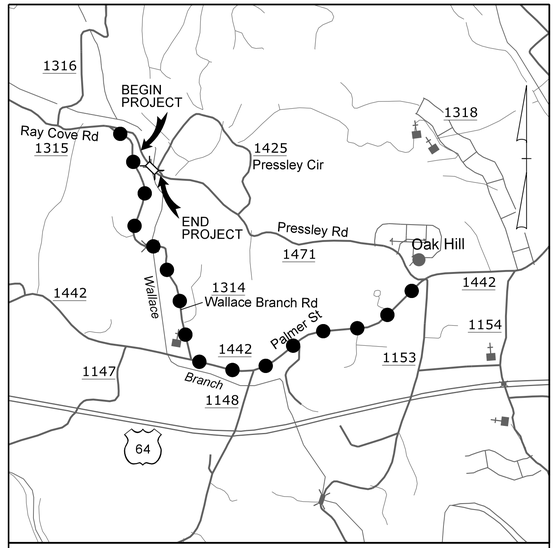

VICINITY MAP NTS

OFF–SITE DETOUR

75% PLANS

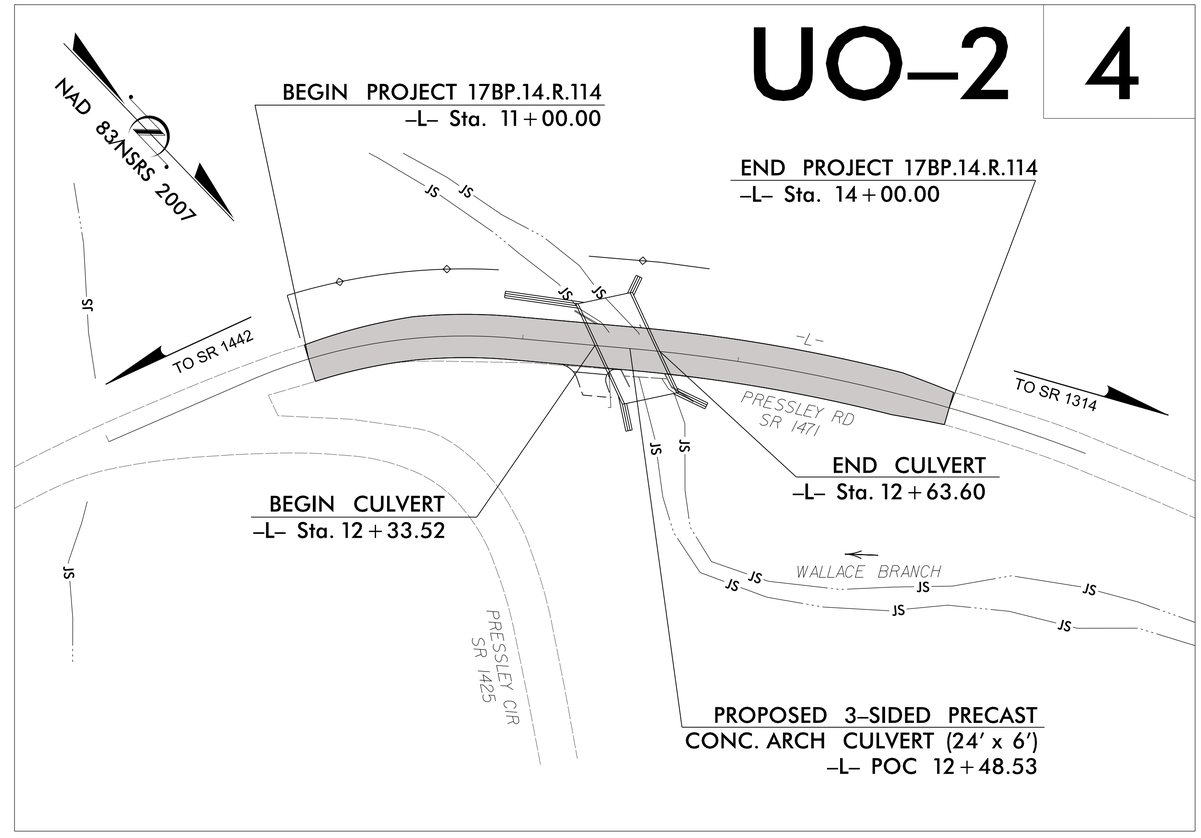

NCDOT CONTACT:
JOSH DEYTON, PE
HIGHWAY DIVISION 14
BRIDGE MANAGER
828–488–0902

PRELIMINARY PLANS
DO NOT USE FOR CONSTRUCTION

GRAPHIC SCALES

20 10 0 20 40
PLANS

INDEX OF SHEETS

SHEET NO.	DESCRIPTION
UO–1	TITLE SHEET
UO–2	UTILITIES BY OTHERS PLAN SHEET

UTILITY OWNERS ON PROJECT

(1) TELEPHONE – FRONTIER COMMUNICATIONS

UTILITIES BY OTHER PLANS PREPARED BY:
DAVIS • MARTIN • POWELL
ENGINEERS & SURVEYORS
6415 OLD PLANK RD. HIGH POINT, NC 27265
PHONE: (336)886-4821 FAX: (336)886-4458
WWW.DMP-INC.COM LICENSE: F-0245

STATE OF NORTH CAROLINA DEPARTMENT OF TRANSPORTATION

29-APR-2015 14:24
P:\2013\13064_Bridge 217\Plans\55021_ut_rdy_TSH_U01.dgn
Davis-Martin-Powell and Associates

PROJECT REFERENCE NO.	SHEET NO.
17BP.14.R.114	UO-2

UTILITIES BY OTHERS

NOTE:
ALL PROPOSED UTILITY WORK SHOWN ON THIS SHEET WILL BE DONE BY OTHERS

LEGEND

- PROPOSED JOINT-USE UTILITY POLE
- PROPOSED POWER POLE
- PROPOSED TELEPHONE POLE

PRELIMINARY PLANS
DO NOT USE FOR CONSTRUCTION

NAD 83/
NA 2011

DETAIL A
LATERAL 'V' DITCH
(Not to Scale)

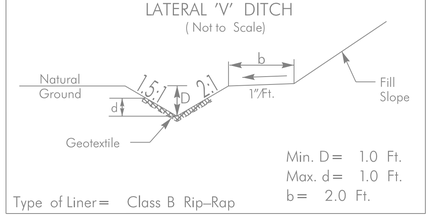

FROM STA. 12+60 TO STA. 13+10 LT

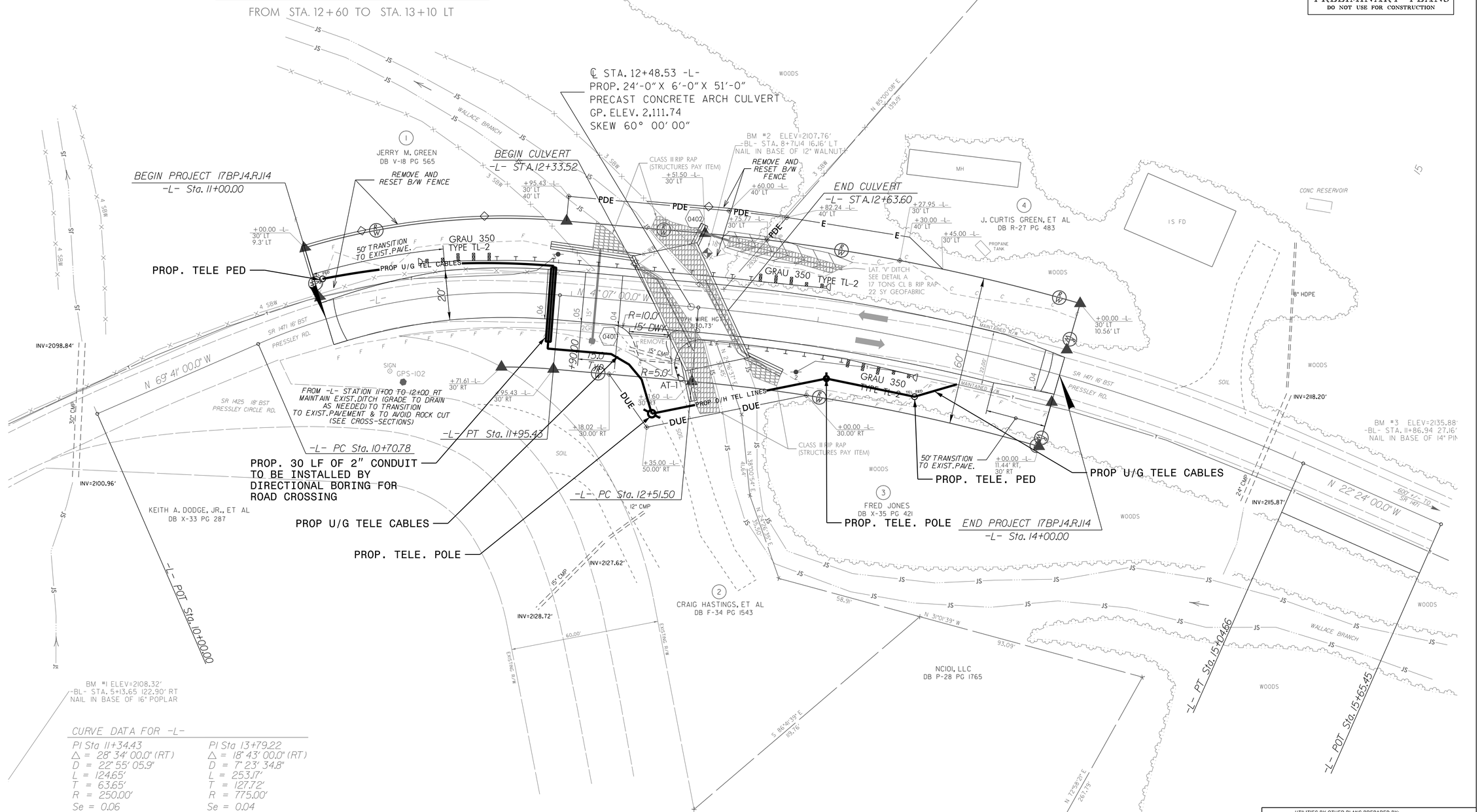

CURVE DATA FOR -L-

PI Sta 11+34.43	PI Sta 13+79.22
Δ = 28° 34' 00.0" (RT)	Δ = 18° 43' 00.0" (RT)
D = 22° 55' 05.9"	D = 7° 23' 34.8"
L = 124.65'	L = 253.17'
T = 63.65'	T = 127.72'
R = 250.00'	R = 775.00'
Se = 0.06	Se = 0.04

UTILITIES BY OTHER PLANS PREPARED BY:
DAVIS • MARTIN • POWELL
ENGINEERS & SURVEYORS
6415 OLD PLANK RD. HIGH POINT, NC 27265
PHONE: (336)886-4821 FAX: (336)886-4458
WWW.DMPINC.COM LICENSE: F-0245

29-APR-2015 14:24
R:\2013\13016148\Bridge 217\Plans\550217_ut_rdy_psh_04_UO2.dgn
Davis Martin Powell and Associates

17BP.14.R.114
CROSS SECTIONS

INDEX OF SHEETS

TITLE	STATION	SHEET NO.
CROSS-SECTION INDEX		X-1
CROSS-SECTION SUMMARY		X-1A
-L- CROSS-SECTIONS	10+80 - 14+10	X-2 THROUGH X-7

NOTE: Approximate quantities only. Clearing and Grubbing, Unclassified Excavation, Fine Grading, and Removal of Existing Asphalt Pavement will be paid for at the contract lump sum price for "Grading".

8/23/99
10/14/2015 9:31:47 AM G:\CKE Projects\CKE21004 Limited Services Division Offices\Group 3\550217\Roadway\XSC\17BP.14.R.114_550217_RDY_XPL_001.dgn

PROJ. REFERENCE NO.	SHEET NO.
17BP.14.R.114	X-1A

STATE OF NORTH CAROLINA
DIVISION OF HIGHWAYS

NOTE: EMBANKMENT COLUMN INCLUDES BACKFILL FOR UNDERCUT

CROSS-SECTION SUMMARY

Station L	Uncl. Exc. (cu. yd.)	Embt (cu. yd.)
11+00.00	0	0
11+10.00	1	0
11+20.00	2	1
11+30.00	2	0
11+40.00	1	1
11+50.00	1	3
11+60.00	1	3
11+70.00	1	3
11+80.00	1	4
11+90.00	1	5
12+00.00	0	5
12+10.00	0	6
12+20.00	0	9
12+30.00	0	10
12+40.00	0	5
12+50.00	0	0
12+60.00	0	15
12+70.00	0	23
12+80.00	0	15
12+90.00	0	15
13+00.00	0	13
13+10.00	8	7
13+20.00	10	5
13+30.00	5	4
13+40.00	5	4
13+50.00	3	2
13+60.00	2	0
13+70.00	3	0
13+80.00	2	3
13+90.00	1	5
14+00.00	1	2

0 2.5 5	PROJ. REFERENCE NO.	SHEET NO.
	17BP.14.R.114	X-2

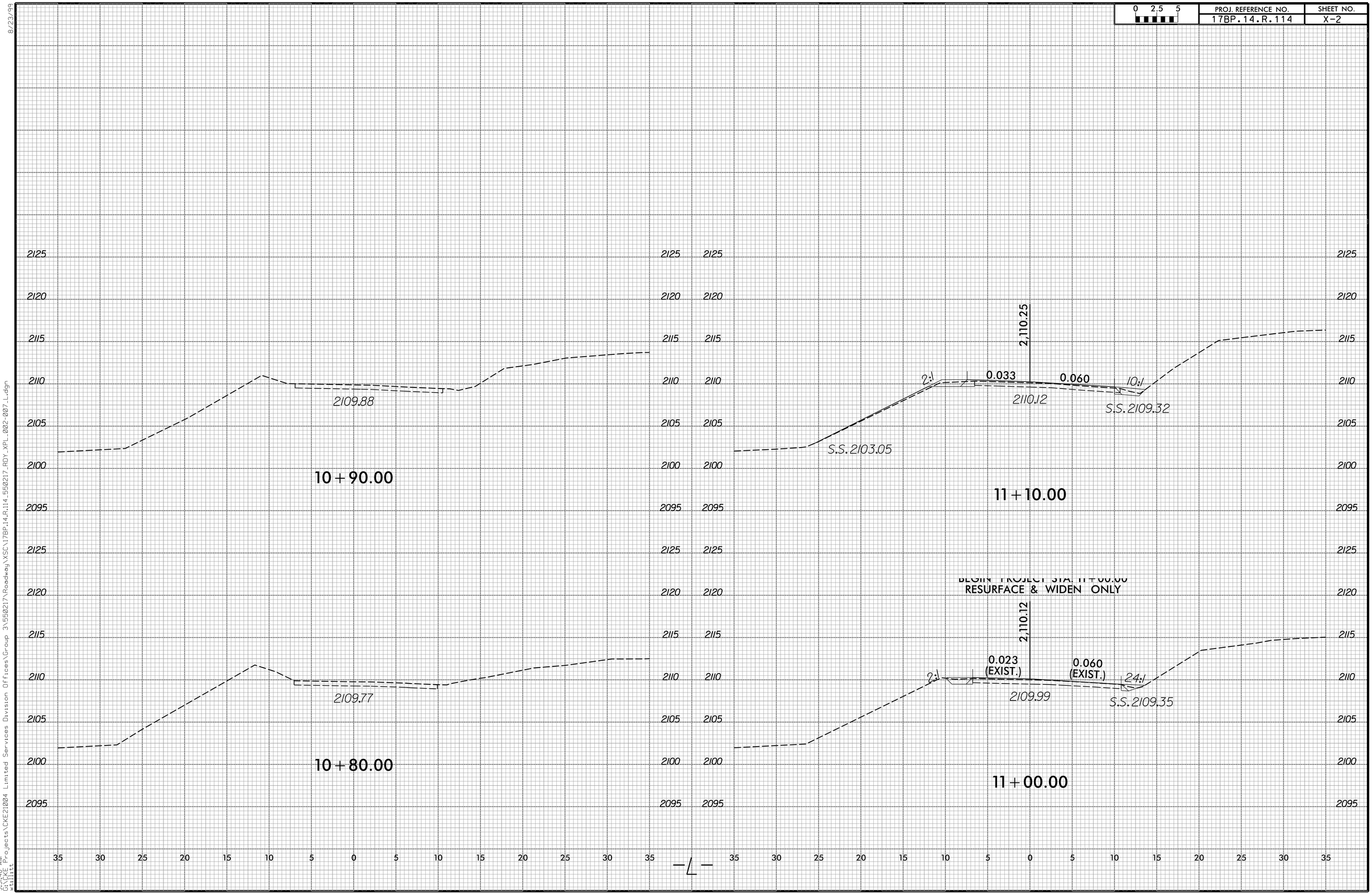

8/23/99

9:31:48 AM
G:\CKE Projects\CKE21004 Limited Services Division Offices\Group 3\550217\Roadway\XSC\17BP.14.R.114.550217_RDY_XPL_002-007_L.dgn
mtillitt

0 2.5 5	PROJ. REFERENCE NO.	SHEET NO.
	17BP.14.R.114	X-3

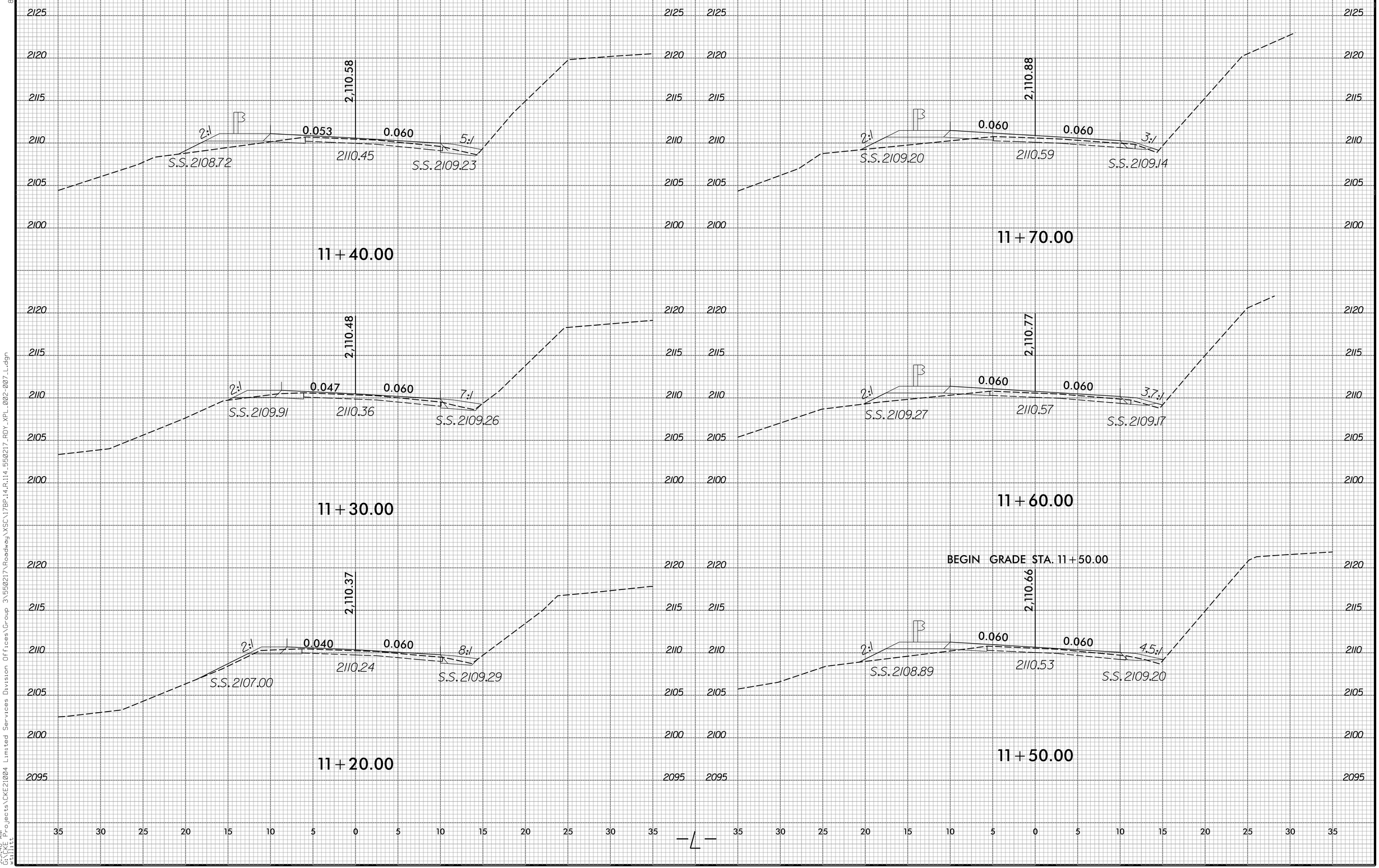

8/23/99

9:31:48 AM
GRICHE, PAT
*tilitt

G:\Projects\CKE21004 Limited Services Division Offices\Group 3\550217\Roadway\XSC\17BP.14.R.114.550217_RDY_XPL_002-007_L.dgn

0 2.5 5	PROJ. REFERENCE NO.	SHEET NO.
	17BP.14.R.114	X-4

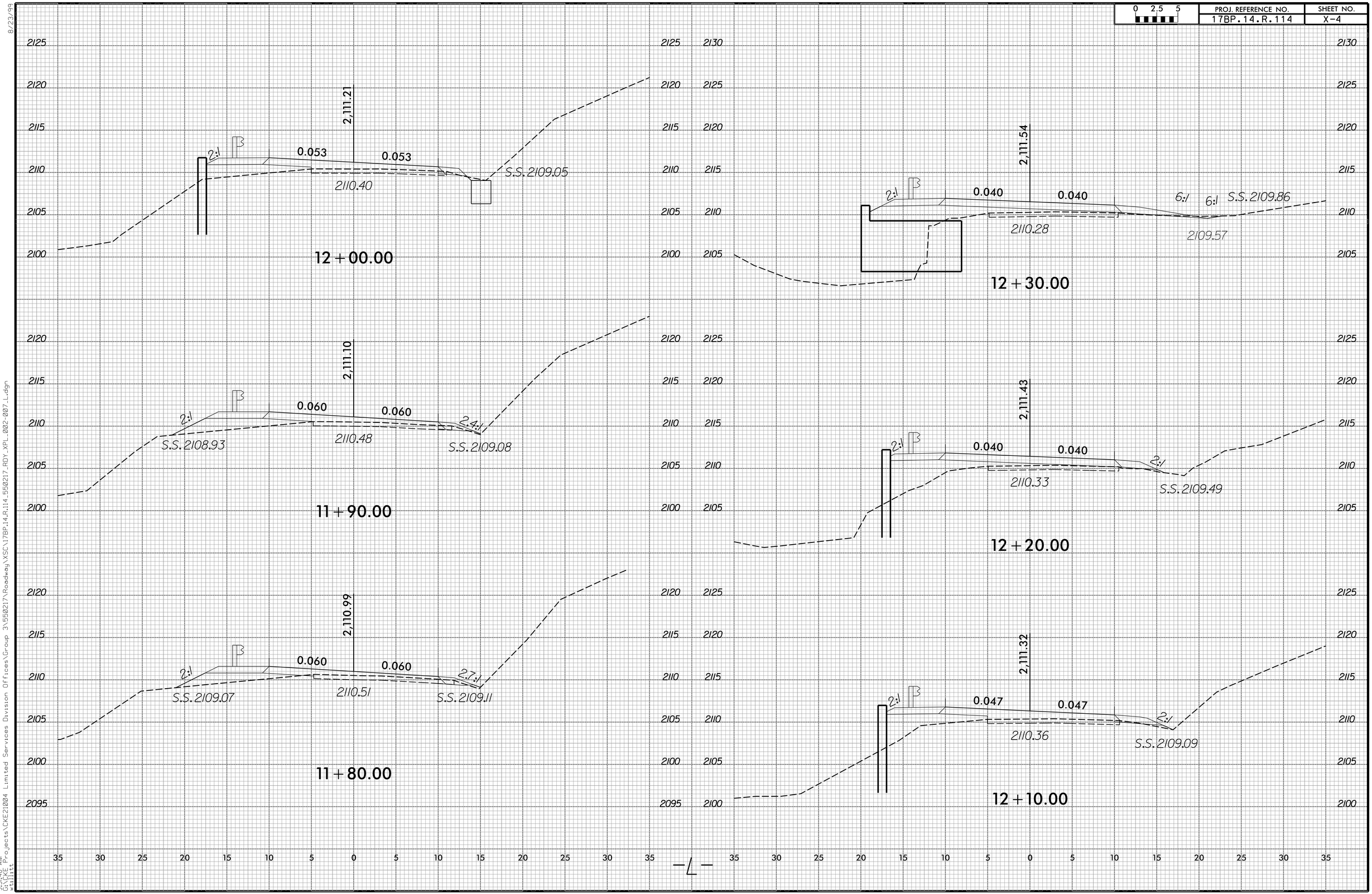

8/23/99

9:31:48 AM
G:\CKE Projects\CKE21004 Limited Services Division Offices\Group 3\550217\Roadway\XSC\17BP.14.R.114.550217_RDY_XPL_002-007_L.dgn
mtillit

0 2.5 5	PROJ. REFERENCE NO.	SHEET NO.
	17BP.14.R.114	X-5

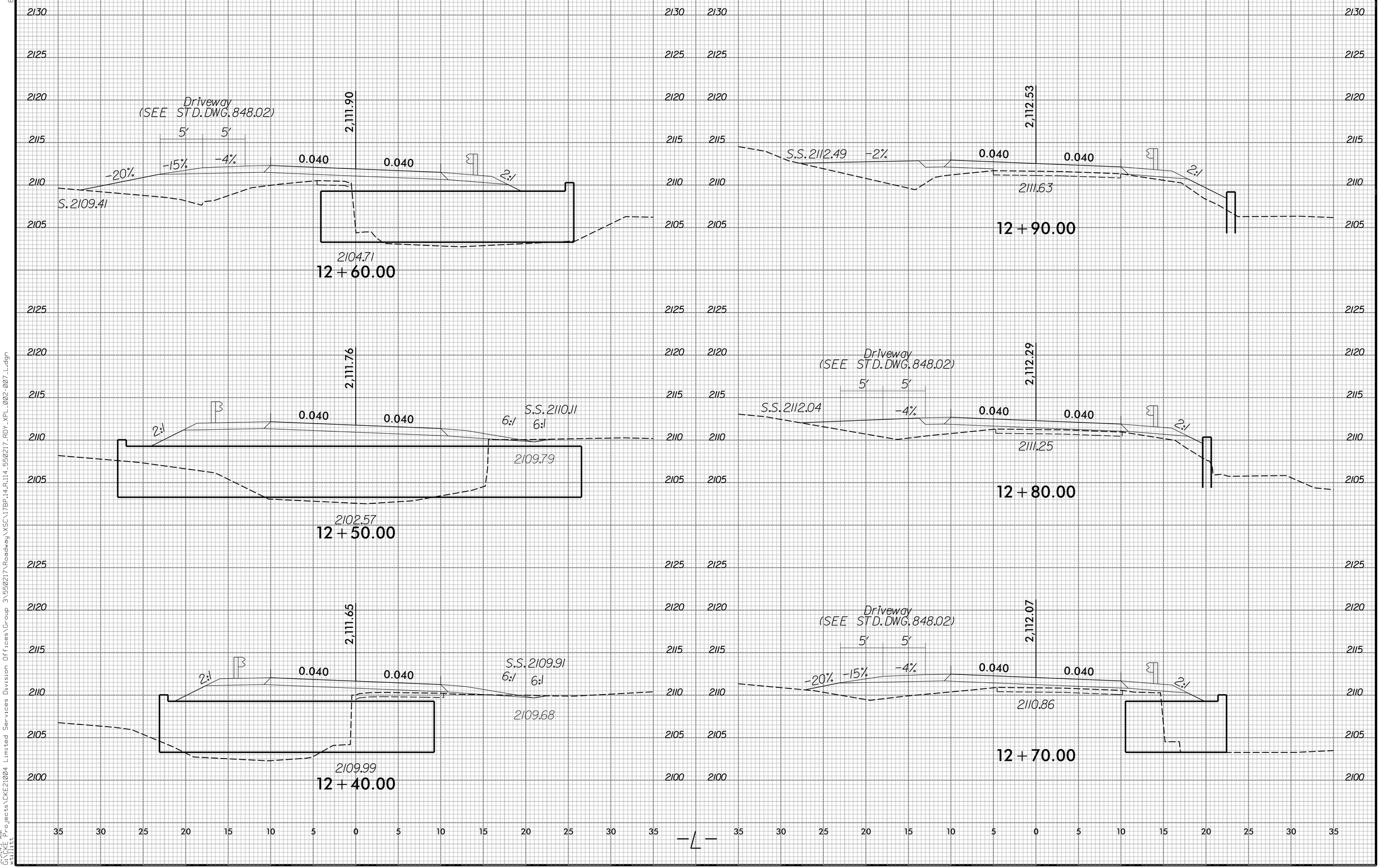

8/23/99

9:31:49 AM
G:\CKE Projects\CKE21004 Limited Services Division Offices\Group 3\550217\Roadway\XSC\17BP.14.R.114_550217_RDY_XPL_002-007_L.dgn
xtillit

0 2.5 5	PROJ. REFERENCE NO.	SHEET NO.
	17BP.14.R.114	X-6

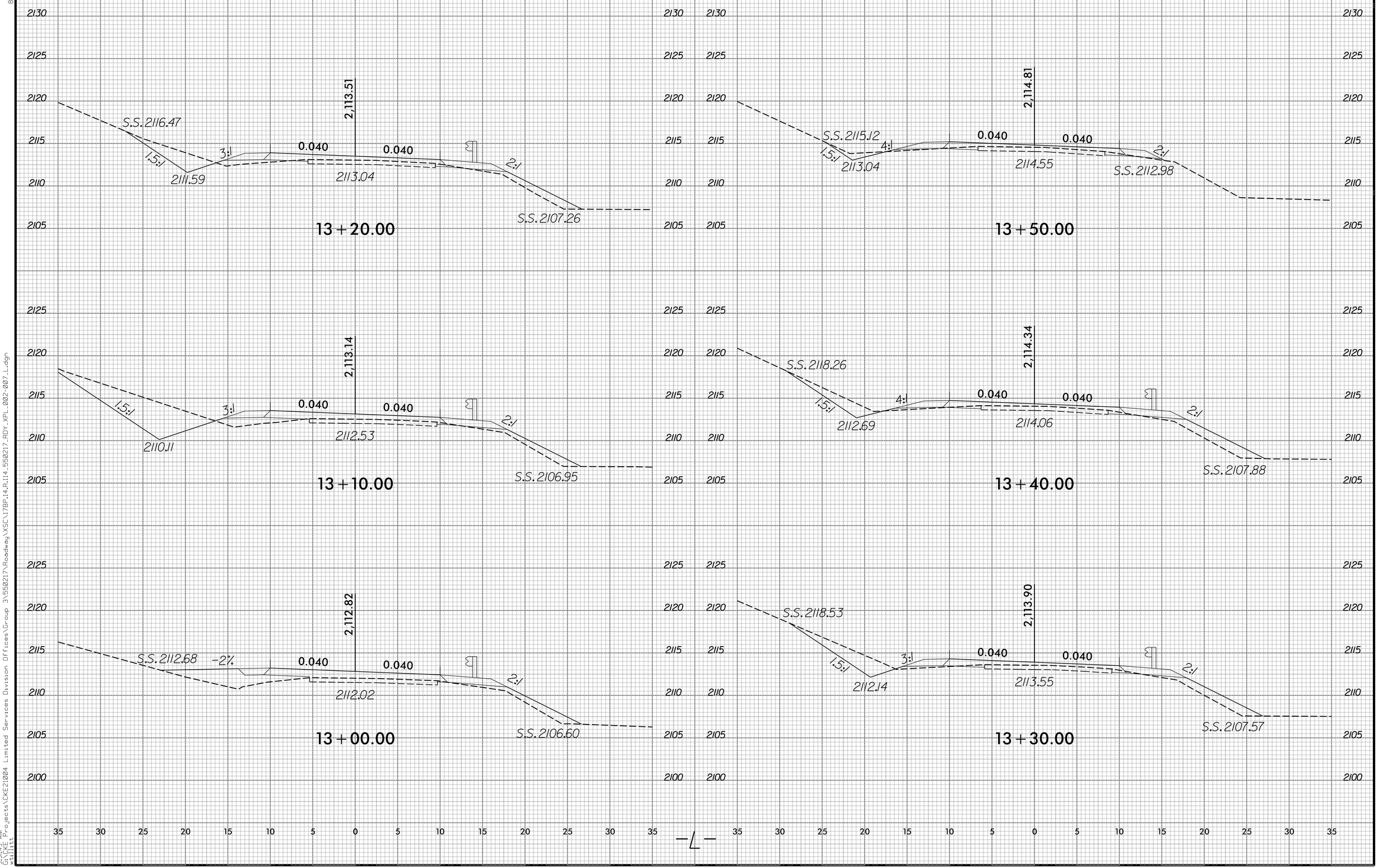

8/23/99

9:31:49 AM
G:\CKE Projects\CKE21004 Limited Services Division Offices\Group 3\550217\Roadway\XSC\17BP.14.R.114_550217_RDY_XPL_002-007_L.dgn
xtillit

0 2.5 5	PROJ. REFERENCE NO.	SHEET NO.
	17BP.14.R.114	X-7

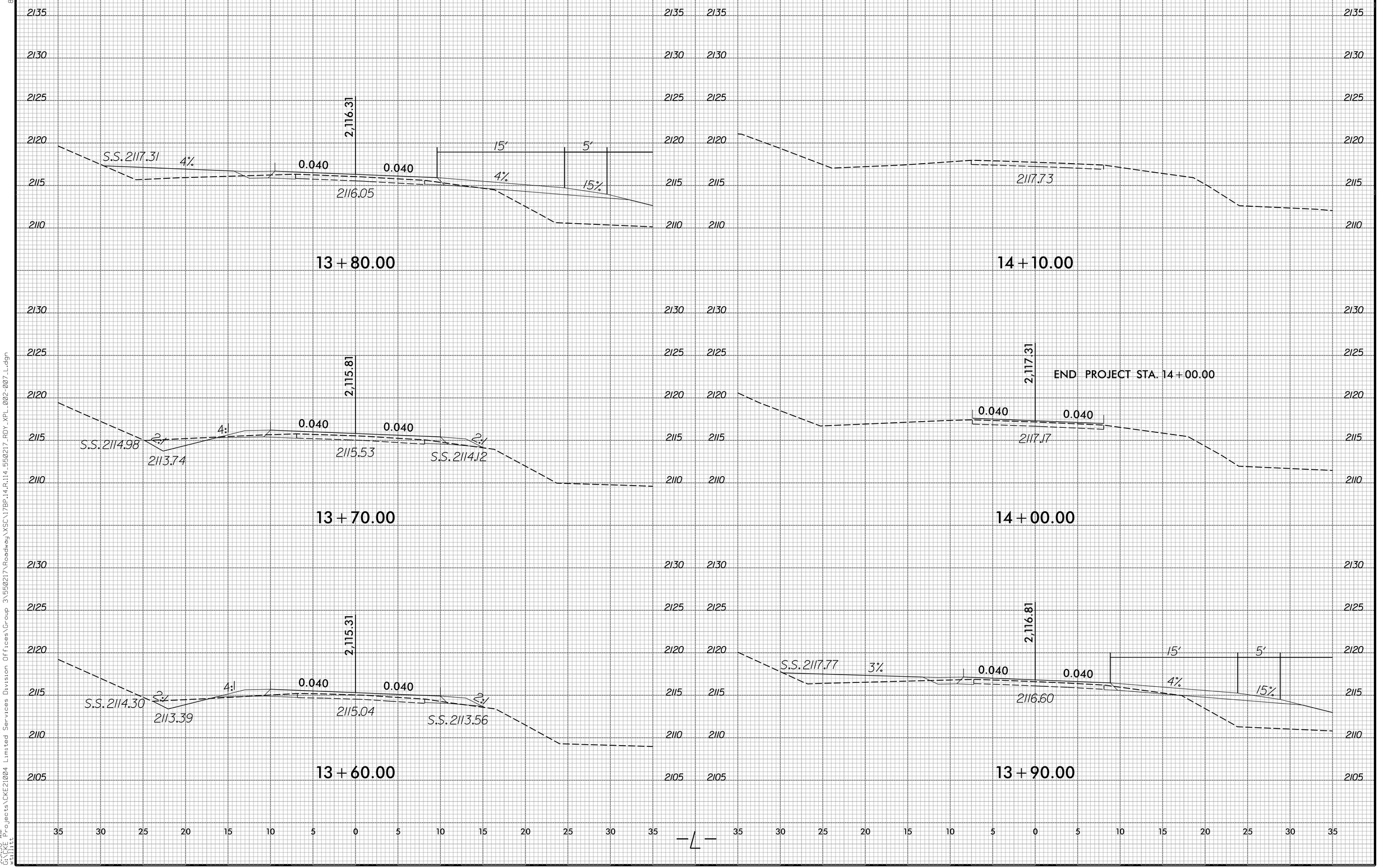

8/23/99

9:31:50 AM
G:\CKE Projects\CKE21004 Limited Services Division Offices\Group 3\550217\Roadway\XSC\17BP.14.R.114_550217_RDY_XPL_002-007_L.dgn
wtillit

BM#2: NAIL IN BASE OF 12" WALNUT TREE, -BL- STA. 8+71.14, 16.2' LT., EL. 2107.76'

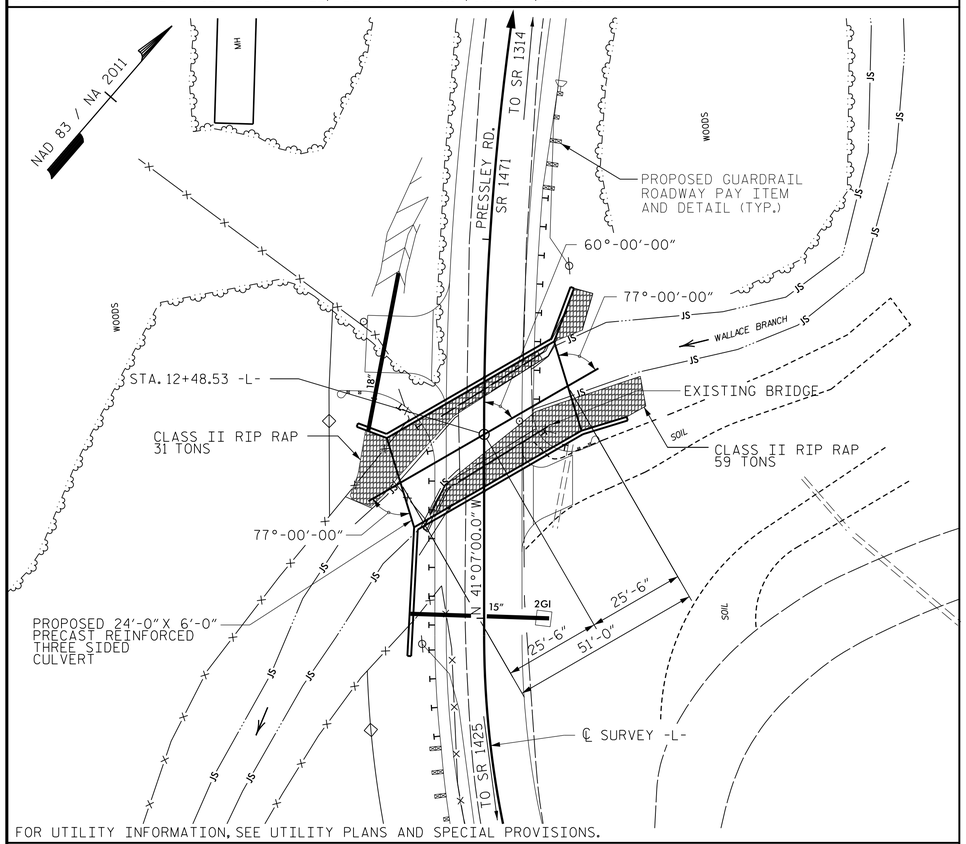

FOR UTILITY INFORMATION, SEE UTILITY PLANS AND SPECIAL PROVISIONS.

LOCATION SKETCH

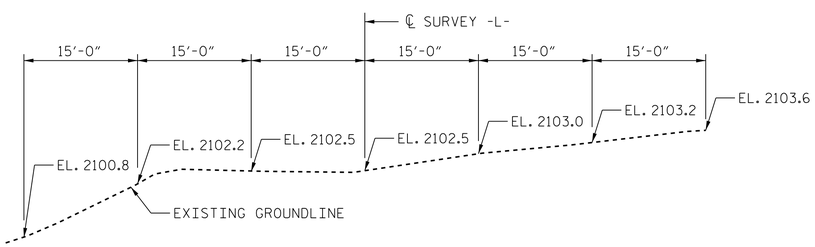

PROFILE ALONG ℄ CULVERT

GRADE DATA -L-

GRADE POINT ELEV. @ STA. 12+48.53 -L- = 2111.74
BED ELEV. @ STA. 12+48.53 -L- = 2103.28
ROADWAY SLOPES = 2:1

HORIZONTAL CURVE DATA -L-

P.I. STA. = 13+79.22 -L-
Δ = 18°43'00.00" (RT.)
D = 7°23'34.8"
L = 253.17'
T = 127.72'
R = 775.00'

VERTICAL CURVE DATA -L-

(+) 1.100% △ (+) 5.000%

P.I. STA = 13+00.00 -L-
EL = 2112.31
VC = 105.00'

HYDRAULIC DATA

DESIGN DISCHARGE	= 650 C.F.S.
FREQUENCY OF DESIGN FLOOD	= 25 YEARS
DESIGN HIGH WATER ELEVATION	= 2108.3
DRAINAGE AREA	= 1.90 SQ. MI.
BASIC DISCHARGE (Q100)	= 900 C.F.S.
BASIC HIGH WATER ELEVATION	= 2110.3

OVERTOPPING FLOOD DATA

OVERTOPPING DISCHARGE	= 1230 C.F.S.
FREQUENCY OF OVERTOPPING FLOOD	= 500+ YEARS
OVERTOPPING FLOOD ELEVATION	= 2112.1

NOTES

ASSUMED LIVE LOAD ---------- HL-93 OR ALTERNATE LOADING.

DESIGN FILL ---------- 2.0'.

FOR OTHER DESIGN DATA AND GENERAL NOTES, SEE STANDARD NOTE SHEET.

THE RESIDENT ENGINEER SHALL CHECK THE LENGTH OF CULVERT BEFORE STAKING IT OUT TO MAKE CERTAIN THAT IT WILL PROPERLY TAKE CARE OF THE FILL.

FOR BORING INFORMATION, SEE GEOTECHNICAL REPORT.

SEE ROADWAY PLANS FOR RIP RAP REQUIREMENTS AT CULVERT ENDS.

FOR ADDITIONAL INFORMATION REGARDING DRAINAGE, GRADING, AND ROADWAY, SEE ROADWAY PLANS.

THE DETAILS SHOWN ARE FOR GENERAL LAYOUT ONLY, THE SUPPLIER SHALL PROVIDE DESIGNS AND DETAILS FOR REVIEW AND APPROVAL THAT MEET THE REQUIREMENTS OF AASHTO LRFD BRIDGE DESIGN SPECIFICATIONS, SECTION 12, AND ARE SEALED BY A NORTH CAROLINA REGISTERED PROFESSIONAL ENGINEER. DESIGN SHALL INCLUDE LRFR LOAD RATING.

UNLESS OTHERWISE INDICATED, THE SUPPLIER SHALL DESIGN, DETAIL, AND FURNISH ALL STRUCTURAL ELEMENTS AND HARDWARE.

THE EXISTING STRUCTURE CONSISTING OF ONE 20'-6" SPAN CONSISTING OF TIMBER FLOOR ON TIMBER JOISTS SHALL BE REMOVED. THE EXISTING BRIDGE IS PRESENTLY POSTED BELOW THE LEGAL LOAD LIMIT. SHOULD THE STRUCTURAL INTEGRITY OF THE BRIDGE FURTHER DETERIORATE, THIS LOAD LIMITATION MAY BE REDUCED AS FOUND NECESSARY DURING THE LIFE OF THE PROJECT.

THE SUBSTRUCTURE OF THE EXISTING BRIDGE INDICATED ON THE PLANS IS FROM THE BEST INFORMATION AVAILABLE. SINCE THIS INFORMATION IS SHOWN FOR THE CONVENIENCE OF THE CONTRACTOR, THE CONTRACTOR SHALL HAVE NO CLAIM WHATSOEVER AGAINST THE DEPARTMENT OF TRANSPORTATION FOR ANY DELAYS OR ADDITIONAL COST INCURRED BASED ON DIFFERENCES BETWEEN THE EXISTING BRIDGE SUBSTRUCTURE SHOWN ON THE PLANS AND THE ACTUAL CONDITIONS AT THE PROJECT SITE.

REMOVAL OF THE EXISTING BRIDGE SHALL BE PERFORMED SO AS NOT TO ALLOW DEBRIS TO FALL INTO THE WATER. THE CONTRACTOR SHALL REMOVE THE BRIDGE AND SUBMIT PLANS FOR DEMOLITION IN ACCORDANCE WITH ARTICLE 402-2 OF THE STANDARD SPECIFICATIONS.

FOR CULVERT DIVERSION DETAILS AND PAY ITEM, SEE EROSION CONTROL PLANS.

THE CONTRACTOR SHALL STAKE OUT THE LENGTH OF CULVERT FOR ENGINEER REVIEW PRIOR TO ORDERING CULVERT.

FOR PRECAST REINFORCED CONCRETE THREE-SIDED CULVERT AT STA. 12+48.53 -L-, SEE SPECIAL PROVISIONS.

FOR FALSEWORK AND FORMWORK, SEE SPECIAL PROVISIONS.

FOR SUBMITTAL OF WORKING DRAWINGS, SEE SPECIAL PROVISIONS.

FOR CRANE SAFETY, SEE SPECIAL PROVISIONS.

FOR GROUT FOR STRUCTURES, SEE SPECIAL PROVISIONS.

THIS STRUCTURE HAS BEEN DESIGNED IN ACCORDANCE WITH "HEC 18- EVALUATING SCOUR AT BRIDGES."

GUARDRAIL POST LOCATIONS SHALL BE DETERMINED IN THE FIELD BY YHE ENGINEER TO ENSURE ADEQUATE COVER FOR INSTALLATION.

TOTAL STRUCTURE QUANTITIES	QUANTITY	UNIT
REMOVAL OF EXISTING STRUCTURE @ STA. 12+48.53 -L-		
RIP RAP, CLASS II	90	TONS
GEO-TEXTILE FABRIC	100	SY
PRECAST REINFORCED CONCRETE THREE-SIDED CULVERT @ STA. 12+48.53 -L-	N/A	LS
CLASS A CONCRETE WINGS AND FOOTINGS	30.2	CY
REINFORCING STEEL	2728	LBS
FOUNDATION EXCAVATION	19	CY

FOUNDATION NOTES

1) THE SPREAD FOOTINGS FOR THE BOTTOMLESS PRECAST CONCRETE CULVERT AT STATION 12+48.53 ARE DESIGNED FOR A FACTORED RESISTANCE OF 5 TSF. CHECK FIELD CONDITIONS FOR THE REQUIRED RESISTANCE OF 12 TSF JUST BEFORE PLACING CONCRETE.

2) KEY IN FOOTINGS FOR THE BOTTOMLESS PRECAST CONCRETE CULVERT AT STATION 12+48.53 AT LEAST 12" INTO ROCK WITH A MINIMUM THICKNESS AS SHOWN ON THE PLANS.

3) THE SCOUR CRITICAL ELEVATION FOR THE BOTTOMLESS PRECAST CONCRETE CULVERT AT STATION 12+48.53 IS THE BOTTOM OF FOOTING ELEVATION. SCOUR CRITICAL ELEVATIONS ARE USED TO MONITOR POSSIBLE SCOUR PROBLEMS DURING THE LIFE OF THE STRUCTURE.

4) FOR BLASTING ADJACENT TO HIGHWAY STRUCTURES, SEE ARTICLE 410-9 OF THE STANDARD SPECIFICATIONS.

PROJECT NO. 17BP.14.R.114
MACON COUNTY
STATION: 12+48.53 -L-

SHEET 1 OF 8 REPLACES BRIDGE NO. 217

NORTH CAROLINA PROFESSIONAL SEAL 036321 ENGINEER ROBERT F. DeCOLA
10/13/2015
DocuSigned by: Robert F DeCola
1D1F6A1787B142D...

THE LOUIS BERGER GROUP, Inc.
1001 Wade Avenue, Suite 400
Raleigh, NC 27605-3322
NC COA No. F-0840

STATE OF NORTH CAROLINA
DEPARTMENT OF TRANSPORTATION
RALEIGH

GENERAL DRAWING FOR 24'-0" x 6'-0" PRECAST REINFORCED CONCRETE THREE-SIDED CULVERT AT WALLACE BRANCH ON SR 1471 BETWEEN SR 1425 AND SR 1314

REVISIONS								SHEET NO.
NO.	BY:	DATE:	NO.	BY:	DATE:			C-1
1			3					TOTAL SHEETS
2			4					8

DRAWN BY : R. KNIGHT DATE : JULY 2014
CHECKED BY : R. DeCOLA DATE : JUNE 2015
DESIGN ENGINEER OF RECORD : R. DeCOLA DATE : JUNE 2015

G:\CKE Projects\CKE21004 Limited Services Division Offices\Group 3\550217\Structures\550217_STR_RCBC01.dgn
10/13/2015 1:19:09 PM CKE21004_PDF_full.pltcfg CKE21004_str.tbl

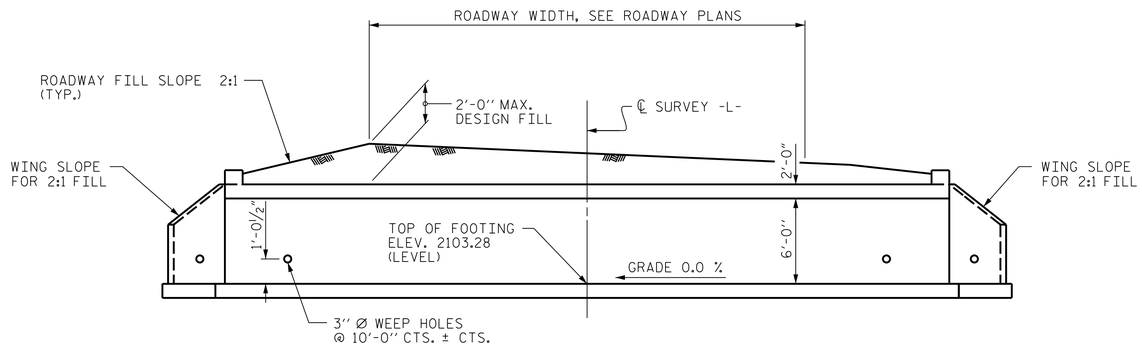

PROFILE ALONG ℄ OF CULVERT

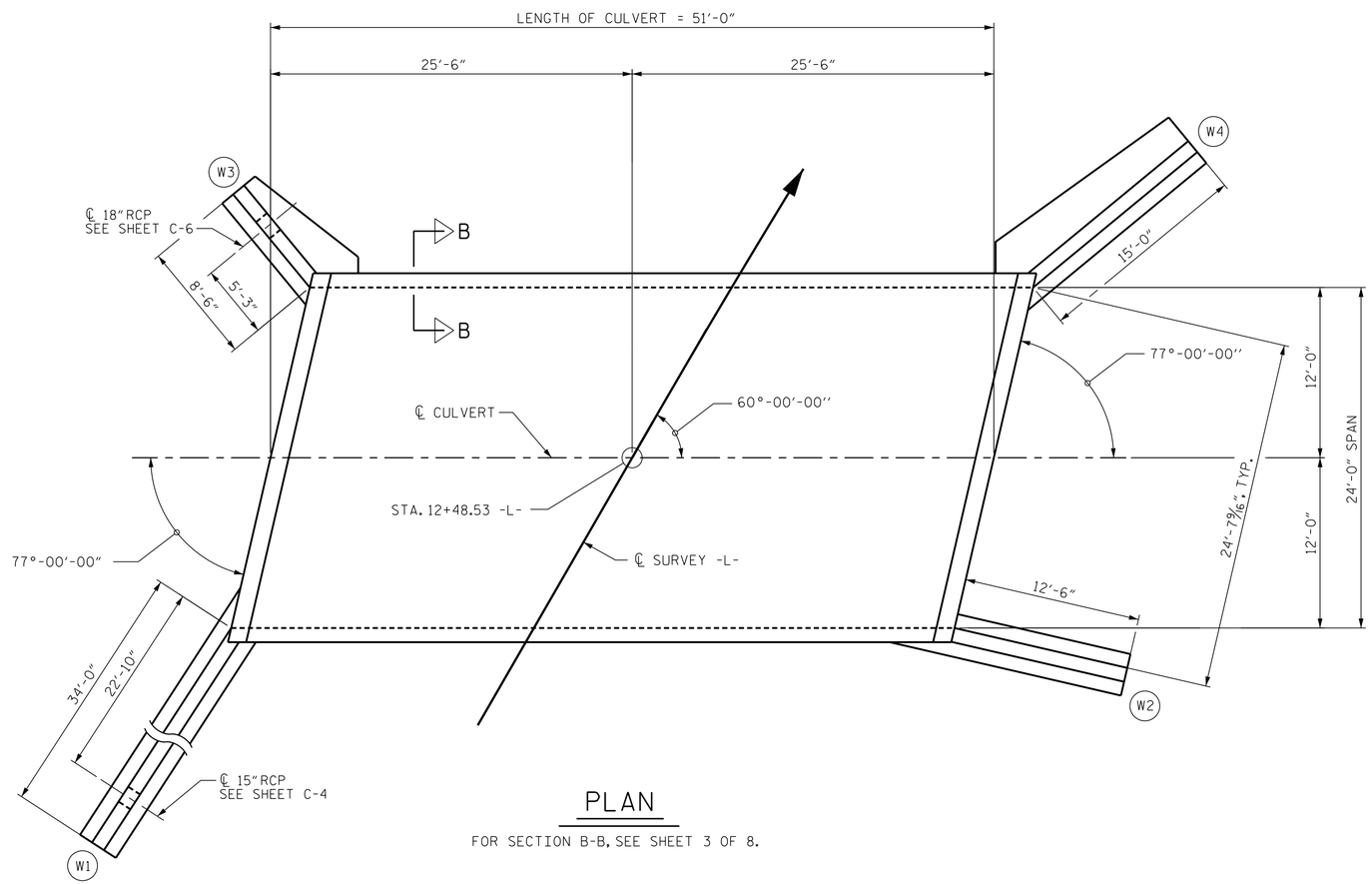

PLAN

FOR SECTION B-B, SEE SHEET 3 OF 8.

PROPOSED ELEVATIONS	
EP INLET	2111.42
CENTERLINE ROADWAY	2111.74
EP OUTLET	2112.08
TOP OF HEADWALL INLET	2112.28
TOP OF HEADWALL OUTLET	2112.28
INVERT INLET	2103.28
INVERT OUTLET	2103.28

PROJECT NO. 17BP.14.R.114

MACON COUNTY

STATION: 12+48.53 -L-

SHEET 2 OF 8

STATE OF NORTH CAROLINA
DEPARTMENT OF TRANSPORTATION
RALEIGH

24'-0" X 6'-0" PRECAST REINFORCED CONCRETE THREE-SIDED CULVERT 60° SKEW

NORTH CAROLINA PROFESSIONAL SEAL 036321 ENGINEER ROBERT F. DeCOLA

10/13/2015

DocuSigned by: Robert F DeCola
1D1F6A17B7B142D...

THE LOUIS BERGER GROUP, Inc.
1001 Wade Avenue, Suite 400
Raleigh, NC 27605-3322
NC COA No. F-0840

REVISIONS							
NO.	BY:	DATE:	NO.	BY:	DATE:		
1			3				
2			4				

SHEET NO. C-2

TOTAL SHEETS 8

DRAWN BY :	R. KNIGHT	DATE :	JULY 2014
CHECKED BY :	R. DeCOLA	DATE :	JULY 2015
DESIGN ENGINEER OF RECORD :	R. DeCOLA	DATE :	JULY 2015

G:\CKE Projects\CKE21004 Limited Services Division Offices\Group 3\550217\Structures\550217_STR_RCBC02.dgn
10/13/2015 1:19:11 PM CKE21004_PDF_full.pltcfg CKE21004_str.tbl

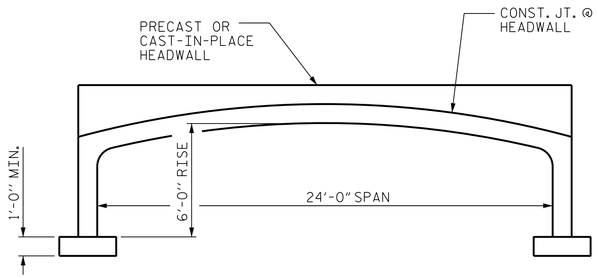

ARCH ALTERNATE

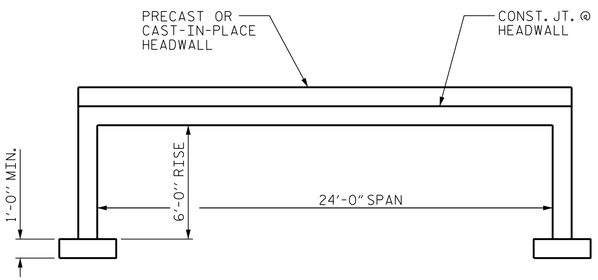

FLAT TOPPED ALTERNATE

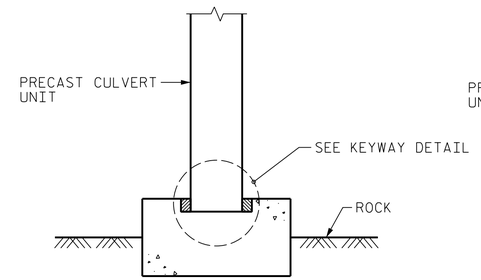

SECTION A-A

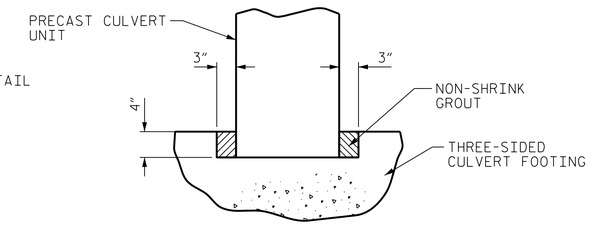

KEYWAY DETAIL

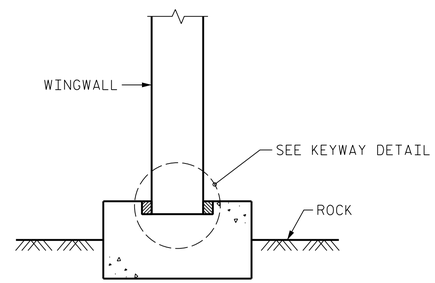

SECTION THRU WINGWALL

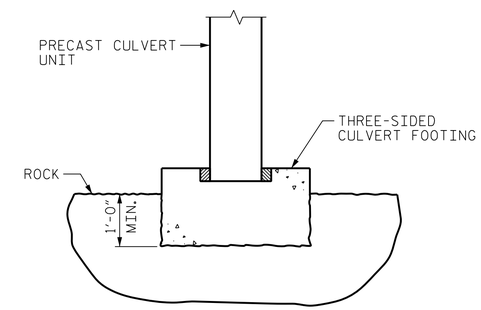

KEYED FOOTING DETAIL

SIDES OF FOOTING SHALL BE IN
CONTACT WITH UNDISTURBED MATERIAL
FOR MINIMUM DISTANCE SHOWN

PROJECT NO. 17BP.14.R.114

MACON COUNTY

STATION: 12+48.53 -L-

SHEET 3 OF 8

NORTH CAROLINA PROFESSIONAL SEAL 036321 ENGINEER ROBERT F. DeCOLA

10/13/2015

DocuSigned by: Robert F DeCola 1D1F6A1787B142D...

THE LOUIS BERGER GROUP, Inc.
1001 Wade Avenue, Suite 400
Raleigh, NC 27605-3322
NC COA No. F-0840

STATE OF NORTH CAROLINA
DEPARTMENT OF TRANSPORTATION
RALEIGH

24'-0" x 6'-0" PRECAST REINFORCED CONCRETE THREE-SIDED CULVERT - 60° SKEW

REVISIONS								SHEET NO.
NO.	BY:	DATE:	NO.	BY:	DATE:			C-3
1			3					TOTAL SHEETS
2			4					8

DRAWN BY :	R. KNIGHT	DATE :	JULY 2014
CHECKED BY :	R. DeCOLA	DATE :	JUNE 2015
DESIGN ENGINEER OF RECORD :	R. DeCOLA	DATE :	JUNE 2015

G:\CKE Projects\CKE21004 Limited Services Division Offices\Group 3\550217\Structures\550217_STR_RCBC03.dgn
10/13/2015 1:19:12 PM CKE21004_PDF_full.pltcfg CKE21004_str.tbl

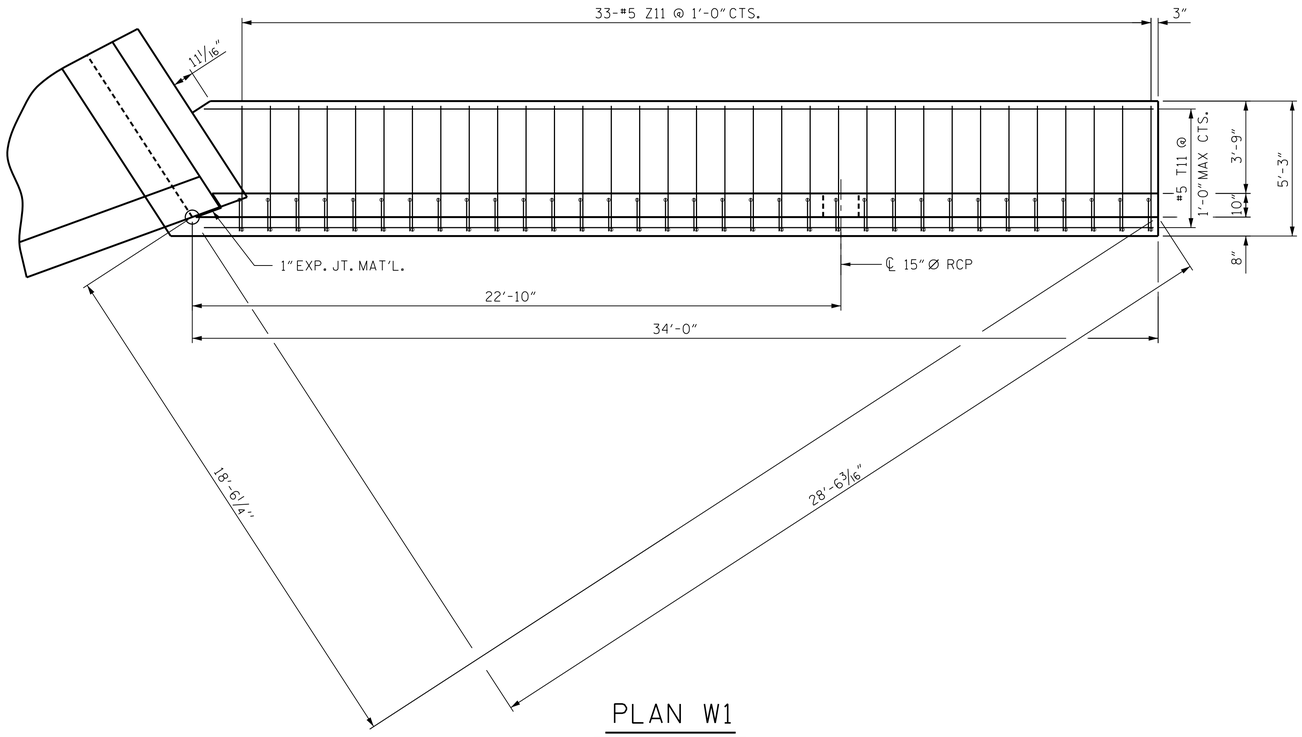

PLAN W1

BAR TYPES

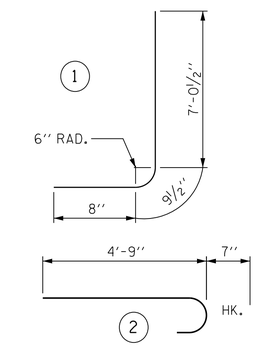

ALL BAR DIMENSIONS ARE OUT TO OUT.

BILL OF MATERIAL

BAR	NO.	SIZE	TYPE	LENGTH	WEIGHT
F1	16	#5	STR	3'-10"	64
H11	14	#5	STR	33'-5"	488
N11	33	#5	1	8'-6"	293
T11	7	#5	STR	33'-6"	245
V11	33	#5	STR	6'-4"	218
Z11	33	#5	2	5'-4"	184

REINFORCING STEEL 1492 LBS.

CLASS A CONCRETE 15.3 CU.YDS.

NOTE: A 3 FOOT STRIP OF FILTER FABRIC SHALL BE ATTACHED TO THE FILL FACE OF THE WING COVERING THE ENTIRE LENGTH OF THE EXPANSION JOINT.

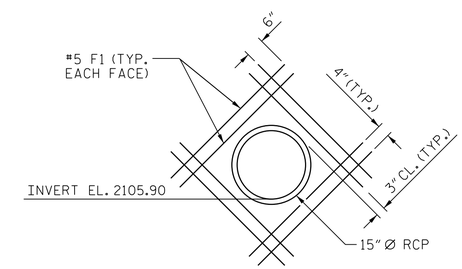

DETAIL OF REINFORCING AROUND 15" Ø RCP

* THE 15" Ø RCP THROUGH THE WING OF THE CULVERT WILL BE LOCATED BY THE ENGINEER. THE REINFORCING STEEL IN WALL SHALL BE CUT OR FIELD BENT AS NECESSARY TO CLEAR PIPE.

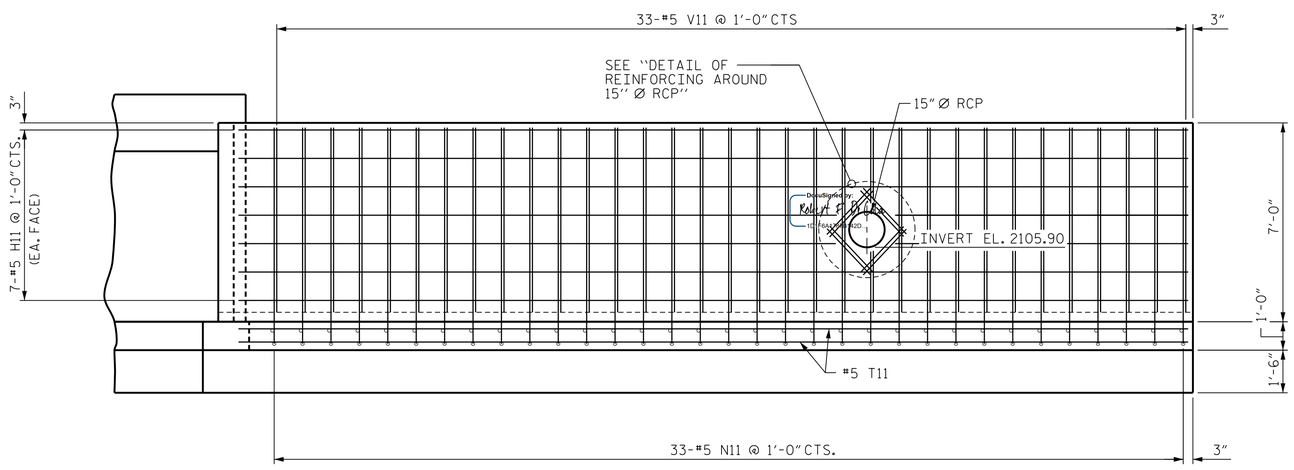

ELEVATION W1

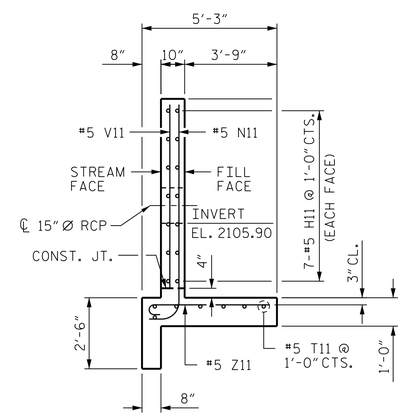

TYPICAL WING SECTION

PROJECT NO. 17BP.14.R.114

MACON COUNTY

STATION: 12+48.53 -L-

SHEET 4 OF 8

NORTH CAROLINA PROFESSIONAL SEAL 036321 ENGINEER ROBERT F. DeCOLA 10/13/2015

DocuSigned by: Robert F DeCola 1D1F6A1787B142D...

STATE OF NORTH CAROLINA
DEPARTMENT OF TRANSPORTATION
RALEIGH

WINGS FOR PRECAST REINFORCED CONCRETE THREE-SIDED CULVERT

THE LOUIS BERGER GROUP, Inc.
1001 Wade Avenue, Suite 400
Raleigh, NC 27605-3322
NC COA No. F-0840

REVISIONS							SHEET NO.
NO.	BY:	DATE:	NO.	BY:	DATE:		C-4
1			3				TOTAL SHEETS
2			4				8

DRAWN BY : R. KNIGHT DATE : JULY 2014
CHECKED BY : R. DeCOLA DATE : JUNE 2015
DESIGN ENGINEER OF RECORD : R. DeCOLA DATE : JUNE 2015

G:\CKE Projects\CKE21004 Limited Services Division Offices\Group 3\550217\Structures\550217_STR_RCBC04.dgn
10/13/2015 1:19:14 PM CKE21004_PDF_full.pltcfg CKE21004_str.tbl

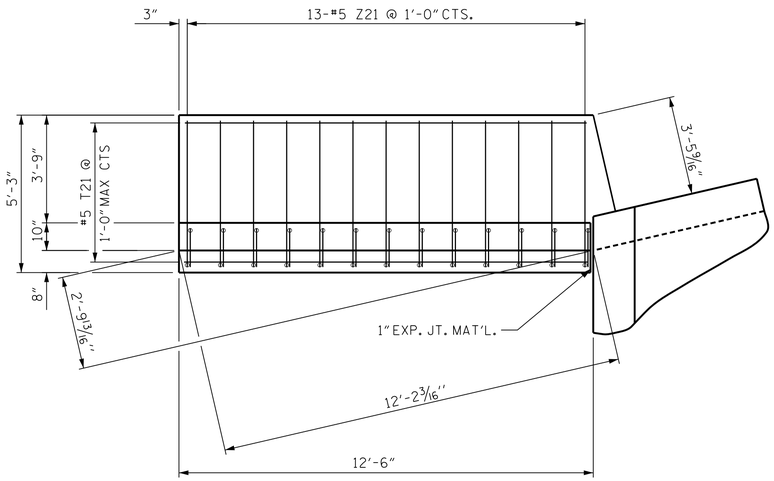

PLAN W2

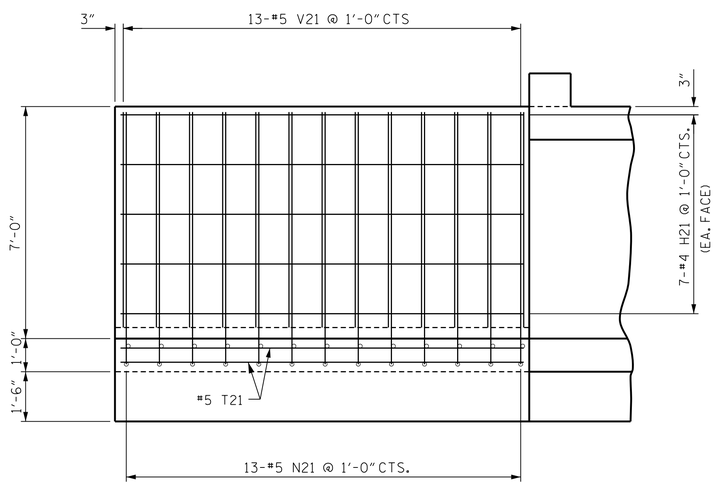

ELEVATION W2

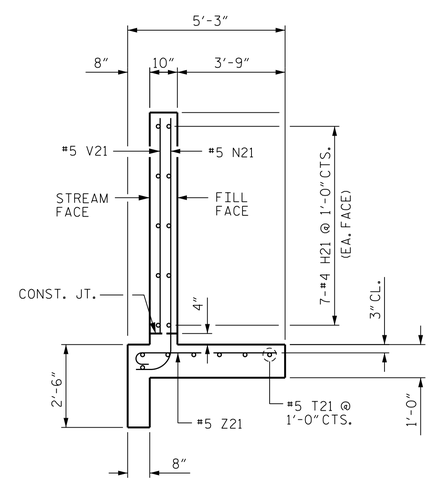

TYPICAL WING SECTION

BAR TYPES

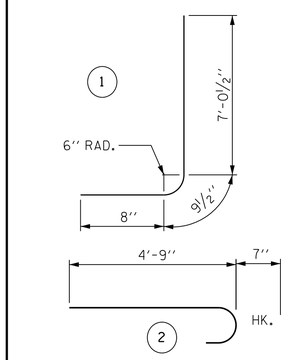

ALL BAR DIMENSIONS ARE OUT TO OUT.

BILL OF MATERIAL

BAR	NO.	SIZE	TYPE	LENGTH	WEIGHT
H21	14	#4	STR	12'-2"	114
N21	13	#5	1	8'-6"	115
T21	7	#5	STR	12'-0"	88
V21	13	#5	STR	6'-4"	86
Z21	13	#5	2	5'-4"	72

REINFORCING STEEL 475 LBS.

CLASS A CONCRETE 5.7 CU.YDS.

NOTE: A 3 FOOT STRIP OF FILTER FABRIC SHALL BE ATTACHED TO THE FILL FACE OF THE WING COVERING THE ENTIRE LENGTH OF THE EXPANSION JOINT.

PROJECT NO. 17BP.14.R.114

MACON COUNTY

STATION: 12+48.53 -L-

SHEET 5 OF 8

NORTH CAROLINA PROFESSIONAL SEAL 036321 ENGINEER ROBERT F. DeCOLA 10/13/2015

DocuSigned by: Robert F DeCola 1D1F6A1787B1420...

THE LOUIS BERGER GROUP, Inc.
1001 Wade Avenue, Suite 400
Raleigh, NC 27605-3322
NC COA No. F-0840

STATE OF NORTH CAROLINA
DEPARTMENT OF TRANSPORTATION
RALEIGH

WINGS FOR PRECAST REINFORCED CONCRETE THREE-SIDED CULVERT

REVISIONS								SHEET NO.
NO.	BY:	DATE:	NO.	BY:	DATE:			C-5
1			3					TOTAL SHEETS
2			4					8

DRAWN BY : R. KNIGHT DATE : JULY 2014
CHECKED BY : R. DeCOLA DATE : JUNE 2015
DESIGN ENGINEER OF RECORD : R. DeCOLA DATE : JUNE 2015

G:\CKE Projects\CKE21004 Limited Services Division Offices\Group 3\550217\Structures\550217_STR_RCBC05.dgn
10/13/2015 1:19:15 PM CKE21004_PDF_full.pltcfg CKE21004_str.tbl

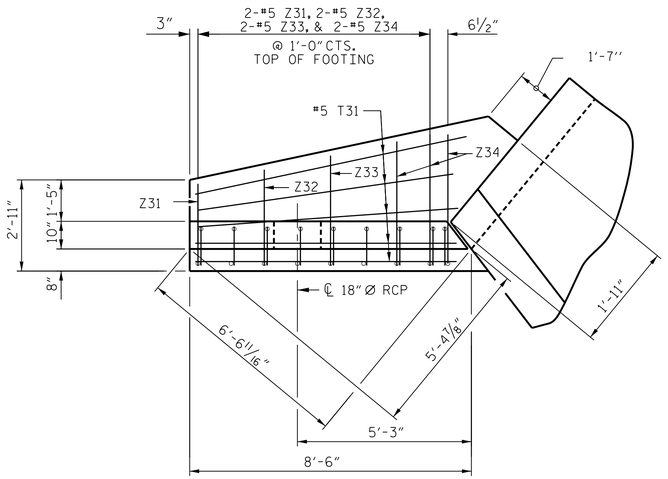

PLAN W3

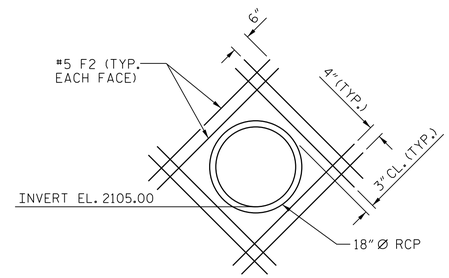

DETAIL OF REINFORCING AROUND 18" Ø RCP

* THE 18" Ø RCP THROUGH THE WING OF THE CULVERT WILL BE LOCATED BY THE ENGINEER. THE REINFORCING STEEL IN WALL SHALL CUT OR BE FIELD BENT AS NECESSARY TO CLEAR PIPE.

BAR TYPES

ALL BAR DIMENSIONS ARE OUT TO OUT.

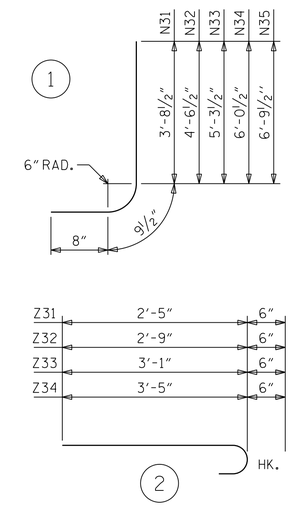

BILL OF MATERIAL

BAR	NO.	SIZE	TYPE	LENGTH	WEIGHT
F2	16	#5	STR	4'-1"	68
H31	8	#4	STR	8'-0"	43
H32	2	#4	STR	6'-0''	8
H33	2	#4	STR	3'-4''	4
H34	2	#4	STR	8'-7"	11
N31	2	#5	1	5'-2"	11
N32	2	#5	1	6'-0"	13
N33	2	#5	1	6'-9"	14
N34	2	#5	1	7'-6"	16
N35	1	#5	1	8'-3"	9
T31	5	#5	STR	8'-0"	42
V31	2	#4	STR	3'-2"	4
V32	2	#4	STR	4'-0"	5
V33	2	#4	STR	4'-9"	6
V34	2	#4	STR	5'-6"	7
V35	1	#4	STR	6'-3"	4
Z31	2	#5	2	2'-11"	6
Z32	2	#5	2	3'-3"	7
Z33	2	#5	2	3'-7"	7
Z34	3	#5	2	3'-11"	12

REINFORCING STEEL 297 LBS.

CLASS A CONCRETE 2.9 CU. YDS.

NOTE: A 3 FOOT STRIP OF FILTER FABRIC SHALL BE ATTACHED TO THE FILL FACE OF THE WING COVERING THE ENTIRE LENGTH OF THE EXPANSION JOINT.

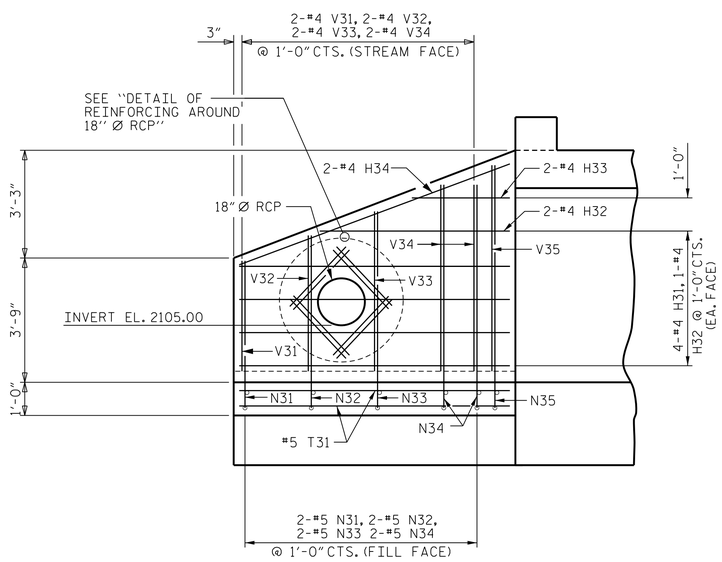

ELEVATION W3

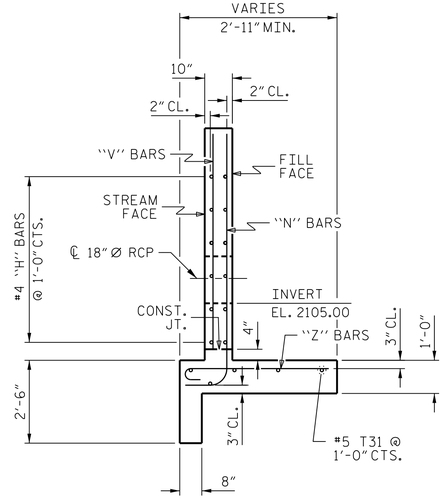

TYPICAL WING SECTION

PROJECT NO. 17BP.14.R.114

MACON COUNTY

STATION: 12+48.53 -L-

SHEET 6 OF 8

STATE OF NORTH CAROLINA
DEPARTMENT OF TRANSPORTATION
RALEIGH

WINGS FOR PRECAST REINFORCED CONCRETE THREE-SIDED CULVERT

NORTH CAROLINA PROFESSIONAL SEAL 036321 ENGINEER ROBERT F. DeCOLA

10/13/2015

DocuSigned by: Robert F DeCola
1D1F6A1787B142D...

THE LOUIS BERGER GROUP, Inc.
1001 Wade Avenue, Suite 400
Raleigh, NC 27605-3322
NC COA No. F-0840

REVISIONS								SHEET NO.
NO.	BY:	DATE:	NO.	BY:	DATE:			C-6
1			3					TOTAL SHEETS
2			4					8

DRAWN BY :	R. KNIGHT	DATE :	JULY 2014
CHECKED BY :	R. DeCOLA	DATE :	JUNE 2015
DESIGN ENGINEER OF RECORD :	R. DeCOLA	DATE :	JUNE 2015

G:\CKE Projects\CKE21004 Limited Services Division Offices\Group 3\550217\Structures\550217_STR_RCBC06.dgn
10/13/2015 1:19:17 PM CKE21004_PDF_full.pltcfg CKE21004_str.tbl

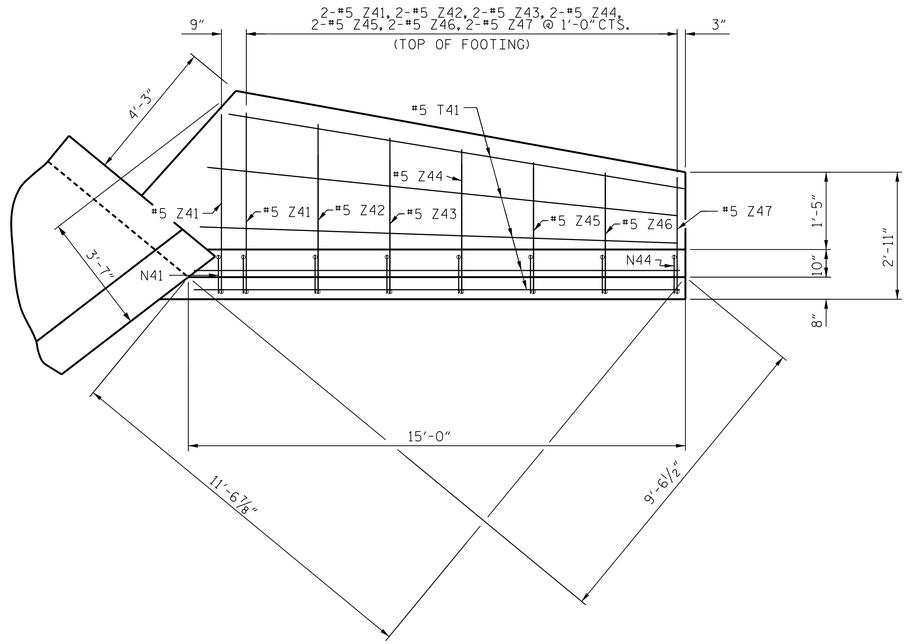

PLAN W4

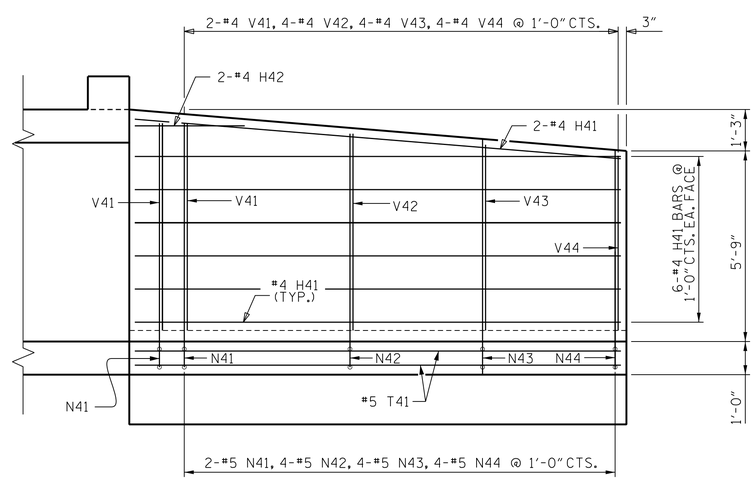

ELEVATION W4

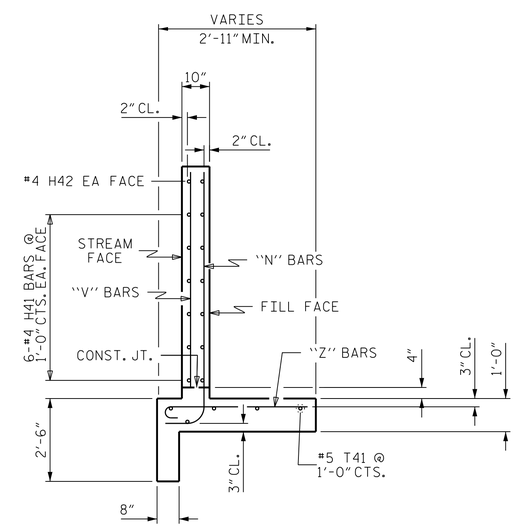

TYPICAL WING SECTION

BAR TYPES

ALL BAR DIMENSIONS ARE OUT TO OUT.

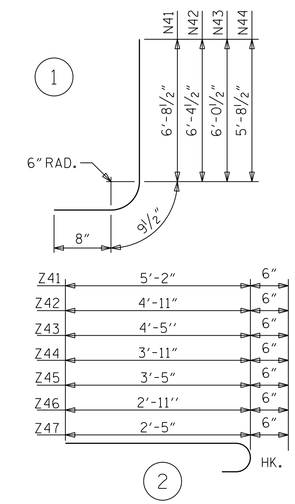

BILL OF MATERIAL

BAR	NO.	SIZE	TYPE	LENGTH	WEIGHT
H41	14	#4	STR	14'-6"	136
H42	2	#4	STR	4'-8"	6
N41	3	#5	1	8'-2"	26
N42	4	#5	1	7'-10"	33
N43	4	#5	1	7'-6"	31
N44	4	#5	1	7'-2"	30
T41	5	#5	STR	14'-8"	76
V41	3	#4	STR	6'-2"	12
V42	4	#4	STR	5'-10"	16
V43	4	#4	STR	5'-6"	15
V44	4	#4	STR	5'-2"	14
Z41	3	#5	2	5'-8"	18
Z42	2	#5	2	5'-5"	11
Z43	2	#5	2	4'-11"	10
Z44	2	#5	2	4'-5"	9
Z45	2	#5	2	3'-11"	8
Z46	2	#5	2	3'-5"	7
Z47	2	#5	2	2'-11"	6

REINFORCING STEEL 464 LBS.
CLASS A CONCRETE 6.3 CU. YDS.

NOTE: A 3 FOOT STRIP OF FILTER FABRIC SHALL BE ATTACHED TO THE FILL FACE OF THE WING COVERING THE ENTIRE LENGTH OF THE EXPANSION JOINT.

PROJECT NO. 17BP.14.R.114
MACON COUNTY
STATION: 12+48.53 -L-

SHEET 7 OF 8

STATE OF NORTH CAROLINA
DEPARTMENT OF TRANSPORTATION
RALEIGH

WINGS FOR PRECAST REINFORCED CONCRETE THREE-SIDED CULVERT

NORTH CAROLINA PROFESSIONAL SEAL 036321 ENGINEER ROBERT F. DeCOLA
10/13/2015
DocuSigned by: Robert F DeCola
1D1F6A1787B142D...

THE LOUIS BERGER GROUP, Inc.
1001 Wade Avenue, Suite 400
Raleigh, NC 27605-3322
NC COA No. F-0840

REVISIONS							SHEET NO.
NO.	BY:	DATE:	NO.	BY:	DATE:		C-7
1			3				TOTAL SHEETS
2			4				8

DRAWN BY : R. KNIGHT DATE : JULY 2014
CHECKED BY : R. DeCOLA DATE : JUNE 2015
DESIGN ENGINEER OF RECORD : R. DeCOLA DATE : JUNE 2015

G:\CKE Projects\CKE21004 Limited Services Division Offices\Group 3\550217\Structures\550217_STR_RCBC07.dgn
10/13/2015 1:19:18 PM CKE21004_PDF_full.pltcfg CKE21004_str.tbl

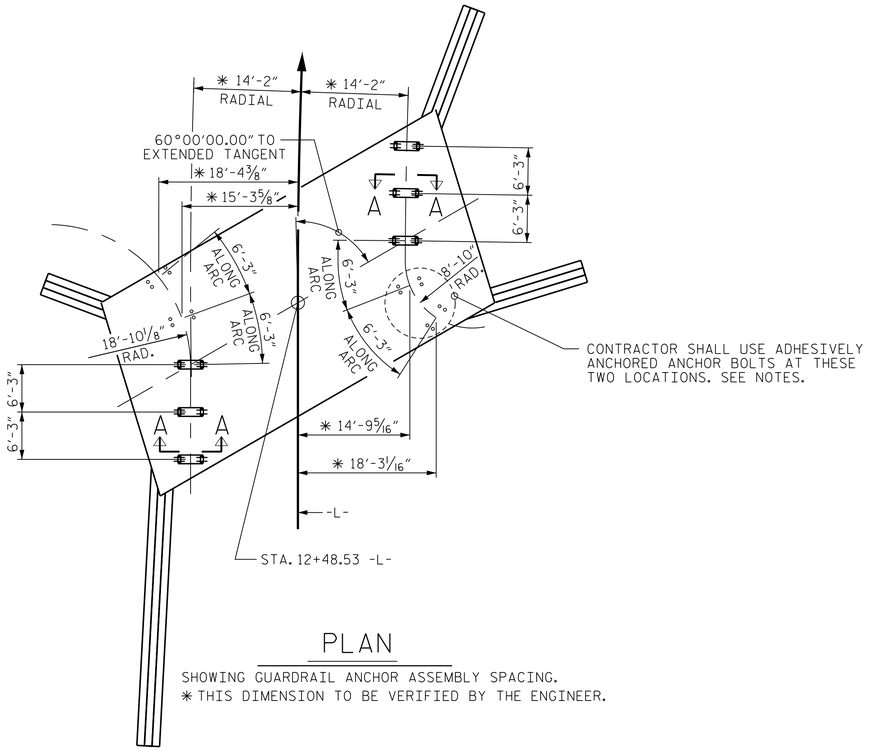

PLAN

SHOWING GUARDRAIL ANCHOR ASSEMBLY SPACING.
✱ THIS DIMENSION TO BE VERIFIED BY THE ENGINEER.

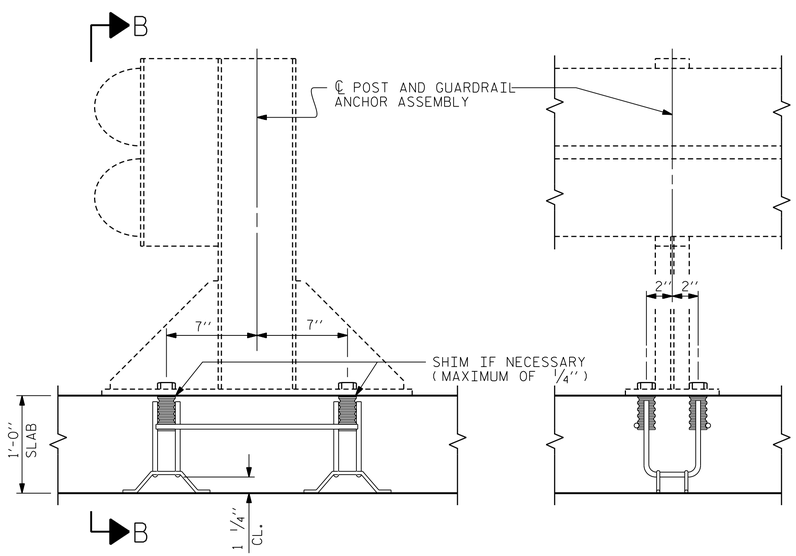

SECTION A-A

SECTION B-B

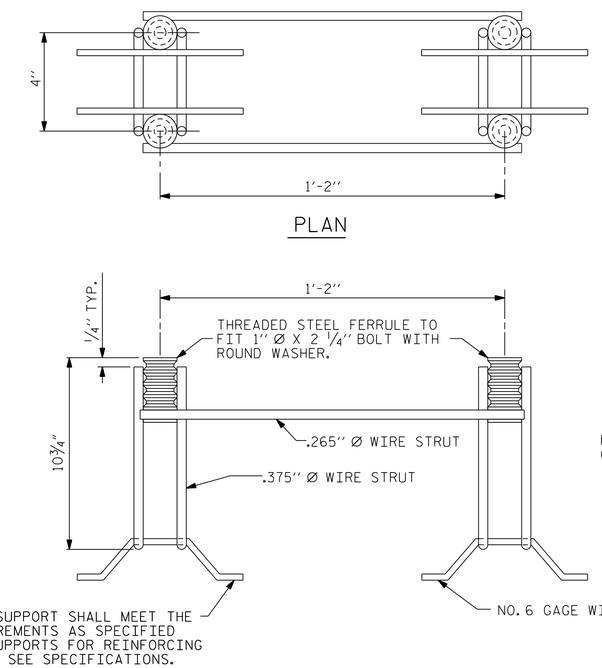

GUARDRAIL ANCHOR ASSEMBLY FOR CULVERTS

NOTES

THE GUARDRAIL ANCHOR ASSEMBLY FOR CULVERTS SHALL CONSIST OF THE FOLLOWING COMPONENTS :

A. FERRULES SHALL BE MADE FROM STEEL MEETING THE REQUIREMENTS OF AASHTO M169, GRADE 12L14 AND SHALL HAVE A MINIMUM LENGTH OF THREADS OF 2½".

B. 4 - 1" Ø X 2¼" BOLTS WITH WASHERS. BOLTS SHALL CONFORM TO THE REQUIREMENTS OF ASTM A307. BOLTS AND WASHERS SHALL BE GALVANIZED. (AT THE CONTRACTOR'S OPTION, STAINLESS STEEL BOLTS AND WASHERS MAY BE USED AS AN ALTERNATE FOR THE 1" Ø X 2¼" GALVANIZED BOLTS AND WASHERS. THEY SHALL CONFORM TO OR EXCEED THE MECHANICAL REQUIREMENTS OF ASTM A307. THE USE OF THIS ALTERNATE SHALL BE APPROVED BY THE ENGINEER.)

C. WIRE STRUTS SHOWN IN THE GUARDRAIL ANCHOR ASSEMBLY FOR CULVERTS DETAIL ARE MINIMUM ALLOWABLE SIZE AND SHALL HAVE A MINIMUM TENSILE STRENGTH OF 100,000 P.S.I. AS AN OPTION, A 7⁄16" Ø WIRE STRUT WITH A MINIMUM TENSILE STRENGTH OF 90,000 PSI IS ACCEPTABLE.

GUARDRAIL ANCHOR ASSEMBLY WITH BOLTS SHALL BE ASSEMBLED IN THE SHOP. BOLT THREADS MAY BE RECUT AS NECESSARY TO INSURE FIT.

THE COST OF THE GUARDRAIL ANCHOR ASSEMBLY FOR CULVERTS COMPLETE IN PLACE, SHALL BE INCLUDED IN THE UNIT CONTRACT PRICE BID FOR CLASS "A" CONCRETE.

FERRULES TO BE PLUGGED DURING POURING OF SLAB AS RECOMMENDED BY THE MANUFACTURER.

AT THE CONTRACTOR'S OPTION, FERRULES WITH OPEN OR CLOSED ENDS MAY BE USED.

PAYMENT FOR GUARDRAIL, POSTS, AND POST BASE PLATES IS INCLUDED IN ROADWAY PAY ITEMS.

SLAB REINFORCING STEEL MAY BE SHIFTED AS NECESSARY TO CLEAR GUARDRAIL ANCHOR ASSEMBLY. CARE SHOULD BE TAKEN TO KEEP THE SHIFTING OF REINFORCING STEEL TO A MINIMUM.

THE CONTRACTOR MAY USE ADHESIVELY ANCHORED ANCHOR BOLTS IN PLACE OF GUARDRAIL ANCHOR ASSEMBLY. LEVEL TWO FIELD TESTING IS REQUIRED, AND THE YIELD LOAD OF THE 1"Ø BOLT IS 21.8 KIPS. FOR ADHESIVELY ANCHORED ANCHOR BOLTS OR DOWELS, SEE STANDARD SPECIFICATIONS.

PROJECT NO. 17BP.14.R.114
MACON COUNTY
STATION: 12+48.53 -L-

SHEET 8 OF 8

ASSEMBLED BY : R. KNIGHT	DATE : JAN. 2015
CHECKED BY : R. DeCOLA	DATE : JUNE 2015
DESIGN ENGINEER OF RECORD: R. DeCOLA	DATE : JUNE 2015
DRAWN BY : FCJ 6/88	REV. 5/7/03 RWW/JTE
CHECKED BY : ARB 6/88	REV. 5/1/06R KMM/GM
	REV. 10/1/11 MAA/GM

NORTH CAROLINA PROFESSIONAL SEAL 036321 ENGINEER ROBERT F. DECOLA
10/13/2015
DocuSigned by: Robert F DeCola
1D1F6A178TB142D...

THE LOUIS BERGER GROUP, Inc.
1001 Wade Avenue, Suite 400
Raleigh, NC 27605-3322
NC COA No. F-0840

STATE OF NORTH CAROLINA
DEPARTMENT OF TRANSPORTATION
RALEIGH

STANDARD

ANCHORAGE DETAILS FOR GUARDRAIL ANCHOR ASSEMBLY FOR CULVERTS

REVISIONS								SHEET NO.
NO.	BY:	DATE:	NO.	BY:	DATE:			C-8
1			3					TOTAL SHEETS
2			4					8

STD. NO. GRA1

G:\CKE Projects\CKE21004 Limited Services Division Offices\Group 3\550217\Structures\550217_STR_RCBC08.dgn
10/13/2015 1:19:21 PM CKE21004_PDF_full.pltcfg CKE21004_str.tbl

STANDARD NOTES

DESIGN DATA:

SPECIFICATIONS	A.A.S.H.T.O. (CURRENT)
LIVE LOAD	SEE PLANS
IMPACT ALLOWANCE	SEE A.A.S.H.T.O.
STRESS IN EXTREME FIBER OF	
STRUCTURAL STEEL - AASHTO M270 GRADE 36	20,000 LBS. PER SQ. IN.
- AASHTO M270 GRADE 50W	27,000 LBS. PER SQ. IN.
- AASHTO M270 GRADE 50	27,000 LBS. PER SQ. IN.
REINFORCING STEEL IN TENSION	
GRADE 60	24,000 LBS. PER SQ. IN.
CONCRETE IN COMPRESSION	1,200 LBS. PER SQ. IN.
CONCRETE IN SHEAR	SEE A.A.S.H.T.O.
STRUCTURAL TIMBER - TREATED OR	
UNTREATED - EXTREME FIBER STRESS	1,800 LBS. PER SQ. IN.
COMPRESSION PERPENDICULAR TO GRAIN OF TIMBER	375 LBS. PER SQ. IN.
EQUIVALENT FLUID PRESSURE OF EARTH	30 LBS. PER CU. FT. (MINIMUM)

MATERIAL AND WORKMANSHIP:

EXCEPT AS MAY OTHERWISE BE SPECIFIED ON PLANS OR IN THE SPECIAL PROVISIONS, ALL MATERIAL AND WORKMANSHIP SHALL BE IN ACCORDANCE WITH THE 2012 "STANDARD SPECIFICATIONS FOR ROADS AND STRUCTURES" OF THE N. C. DEPARTMENT OF TRANSPORTATION.

STEEL SHEET PILING FOR PERMANENT OR TEMPORARY APPLICATIONS SHALL BE HOT ROLLED.

CONCRETE:

UNLESS OTHERWISE REQUIRED ON PLANS, CLASS A CONCRETE SHALL BE USED FOR ALL PORTIONS OF ALL STRUCTURES WITH THE EXCEPTION THAT: CLASS AA CONCRETE SHALL BE USED IN BRIDGE SUPERSTRUCTURES, ABUTMENT BACKWALLS, AND APPROACH SLABS; AND CLASS B CONCRETE SHALL BE USED FOR SLOPE PROTECTION AND RIP RAP.

CONCRETE CHAMFERS:

UNLESS OTHERWISE NOTED ON THE PLANS, ALL EXPOSED CORNERS ON STRUCTURES SHALL BE CHAMFERED 3/4" WITH THE FOLLOWING EXCEPTIONS: TOP CORNERS OF CURBS MAY BE ROUNDED TO 1-1/2" RADIUS WHICH IS BUILT INTO CURB FORMS; CORNERS OF TRANSVERSE FLOOR EXPANSION JOINTS SHALL BE ROUNDED WITH A 1/4" FINISHING TOOL UNLESS OTHERWISE REQUIRED ON PLANS; AND CORNERS OF EXPANSION JOINTS IN THE ROADWAY FACES AND TOPS OF CURBS AND SIDEWALKS SHALL BE ROUNDED TO A 1/4" RADIUS WITH A FINISHING STONE OR TOOL UNLESS OTHERWISE REQUIRED ON PLANS.

DOWELS:

DOWELS WHEN INDICATED ON PLANS AS FOR CULVERT EXTENSIONS, SHALL BE EMBEDDED AT LEAST 12" INTO THE OLD CONCRETE AND GROUTED INTO PLACE WITH 1:2 CEMENT MORTAR.

ALLOWANCE FOR DEAD LOAD DEFLECTION, SETTLEMENT, ETC. IN CASTING SUPERSTRUCTURES:

BRIDGES SHALL BE BUILT ON THE GRADE OR VERTICAL CURVE SHOWN ON PLANS. SLABS, CURBS AND PARAPETS SHALL CONFORM TO THE GRADE OR CURVE.

ALL DIMENSIONS WHICH ARE GIVEN IN SECTION AND ARE AFFECTED BY DEAD LOAD DEFLECTIONS ARE DIMENSIONS AT CENTER LINE OF BEARING UNLESS OTHERWISE NOTED ON PLANS. IN SETTING FORMS FOR STEEL BEAM BRIDGES AND PRESTRESSED CONCRETE GIRDER BRIDGES, ADJUSTMENTS SHALL BE MADE DUE TO THE DEAD LOAD DEFLECTIONS FOR THE ELEVATIONS SHOWN. WHERE BLOCKS ARE SHOWN OVER BEAMS FOR BUILDING UP TO THE SLAB, THE VERTICAL DIMENSIONS OF THE BLOCKS SHALL BE ADJUSTED BETWEEN BEARINGS TO COMPENSATE FOR DEAD LOAD DEFLECTIONS, VERTICAL CURVE ORDINATE, AND ACTUAL BEAM CAMBER. WHERE BOTTOM OF SLAB IS IN LINE WITH BOTTOM OF TOP FLANGES, DEPTH OF SLAB BETWEEN BEARINGS SHALL BE ADJUSTED TO COMPENSATE FOR DEAD LOAD DEFLECTION, VERTICAL CURVE ORDINATE, AND ACTUAL BEAM CAMBER.

IN SETTING FALSEWORK AND FORMS FOR REINFORCED CONCRETE SPANS, AN ALLOWANCE SHALL BE MADE FOR DEAD LOAD DEFLECTIONS, SETTLEMENT OF FALSEWORK, AND PERMANENT CAMBER WHICH SHALL BE PROVIDED FOR IN ADDITION TO THE ELEVATIONS SHOWN. AFTER REMOVAL OF THE FALSEWORK, THE FINISHED STRUCTURES SHALL CONFORM TO THE PROFILE AND ELEVATIONS SHOWN ON THE PLANS AND CONSTRUCTION ELEVATIONS FURNISHED BY THE ENGINEER.

DETAILED DRAWINGS FOR FALSEWORK OR FORMS FOR BRIDGE SUPERSTRUCTURE AND ANY STRUCTURE OR PARTS OF A STRUCTURE AS NOTED ON THE PLANS SHALL BE SUBMITTED TO THE ENGINEER FOR APPROVAL BEFORE CONSTRUCTION OF THE FALSEWORK OR FORMS IS STARTED.

REINFORCING STEEL:

ALL REINFORCING STEEL SHALL BE DEFORMED. DIMENSIONS RELATIVE TO PLACEMENT OF REINFORCING ARE TO CENTERS OF BARS UNLESS OTHERWISE INDICATED IN THE PLANS. DIMENSIONS ON BAR DETAILS ARE TO CENTERS OF BARS OR ARE OUT TO OUT AS INDICATED ON PLANS.

WIRE BAR SUPPORTS SHALL BE PROVIDED FOR REINFORCING STEEL WHERE INDICATED ON THE PLANS. WHEN BAR SUPPORT PIECES ARE PLACED IN CONTINUOUS LINES, THEY SHALL BE SO PLACED THAT THE ENDS OF THE SUPPORTING WIRES SHALL BE LAPPED TO LOCK LEGS ON ADJOINING PIECES.

STRUCTURAL STEEL:

AT THE CONTRACTOR'S OPTION, HE MAY SUBSTITUTE 7/8" Ø SHEAR STUDS FOR THE 3/4" Ø STUDS SPECIFIED ON THE PLANS. THIS SUBSTITUTION SHALL BE MADE AT THE RATE OF 3 - 7/8" Ø STUDS FOR 4 - 3/4" Ø STUDS, AND STUD SPACING CHANGES SHALL BE MADE AS NECESSARY TO PROVIDE THE SAME EQUIVALENT NUMBER OF 7/8" Ø STUDS ALONG THE BEAM AS SHOWN FOR 3/4" Ø STUDS BASED ON THE RATIO OF 3 - 7/8" Ø STUDS FOR 4 - 3/4" Ø STUDS. STUDS OF THE LENGTH SPECIFIED ON THE PLANS MUST BE PROVIDED. THE MAXIMUM SPACING SHALL BE 2'-0".

EXCEPT AT THE INTERIOR SUPPORTS OF CONTINUOUS BEAMS WHERE THE COVER PLATE IS IN CONTACT WITH BEARING PLATE, THE CONTRACTOR MAY, AT HIS OPTION, SUBSTITUTE FOR THE COVER PLATES DESIGNATED ON THE PLANS COVER PLATES OF THE EQUIVALENT AREA PROVIDED THESE PLATES ARE AT LEAST 5/16" IN THICKNESS AND DO NOT EXCEED A WIDTH EQUAL TO THE FLANGE WIDTH LESS 2" OR A THICKNESS EQUAL TO 2 TIMES THE FLANGE THICKNESS. THE SIZE OF FILLET WELDS SHALL CONFORM TO THE REQUIREMENTS OF THE CURRENT ANSI/AASHTO/AWS "BRIDGE WELDING CODE". ELECTROSLAG WELDING WILL NOT BE PERMITTED.

WITH THE SOLE EXCEPTION OF EDGES AT SURFACES WHICH BEAR ON OTHER SURFACES, ALL SHARP EDGES AND ENDS OF SHAPES AND PLATES SHALL BE SLIGHTLY ROUNDED BY SUITABLE MEANS TO A RADIUS OF APPROXIMATELY 1/16 INCH OR EQUIVALENT FLAT SURFACE AT A SUITABLE ANGLE PRIOR TO PAINTING, GALVANIZING, OR METALLIZING.

HANDRAILS AND POSTS:

METAL STANDARDS AND FACES OF THE CONCRETE END POSTS FOR THE METAL RAIL SHALL BE SET NORMAL TO THE GRADE OF THE CURB, UNLESS OTHERWISE SHOWN ON PLANS. THE METAL RAIL AND TOPS OF CONCRETE POSTS USED WITH THE ALUMINUM RAIL SHALL BE BUILT PARALLEL TO THE GRADE OF THE CURB.

METAL HANDRAILS SHALL BE IN ACCORDANCE WITH THE PLANS. RAILS SHALL BE AS MANUFACTURED FOR BRIDGE RAILING. CASTINGS SHALL BE OF A UNIFORM APPEARANCE. FINS AND OTHER DEFORMATIONS RESULTING FROM CASTING OR OTHERWISE SHALL BE REMOVED IN A MANNER SO THAT A UNIFORM COLORING OF THE COMPLETED CASTING SHALL BE OBTAINED. CASTINGS WITH DISCOLORATIONS OR OF NON-UNIFORM COLORING WILL NOT BE ACCEPTED. CERTIFIED MILL REPORTS ARE REQUIRED FOR METAL RAILS AND POSTS.

SPECIAL NOTES:

GENERALLY, IN CASE OF DISCREPANCY, THIS STANDARD SHEET OF NOTES SHALL GOVERN OVER THE SPECIFICATIONS, BUT THE REMAINDER OF THE PLANS SHALL GOVERN OVER NOTES HEREON, AND SPECIAL PROVISIONS SHALL GOVERN OVER ALL. SEE SPECIFICATIONS ARTICLE 105-4.

ENGLISH

JANUARY, 1990

STD. NO. SN

G:\CKE Projects\CKE21004 Limited Services Division Offices\Group 3\550217\Structures\550217_STR_SN.dgn
10/13/2015 1:19:22 PM CKE21004_PDF_full.pltcfg CKE21004_str.tbl

REV. 6-16-95 EEM (✓) RGW REV. 5-7-03 RWW (✓) JTE REV. 10-1-11 MAA (✓) GM
REV. 8-16-99 RWW (✓) LES REV. 5-1-06 TLA (✓) GM