This electronic collection of documents is provided for the convenience of the user and is Not a Certified Document –

The documents contained herein were originally issued and sealed by the individuals whose names and license numbers appear on each page, on the dates appearing with their signature on that page.
This file or an individual page shall not be considered a certified document.

DocuSign Envelope ID: BEA82789-CCD9-4CBA-8A50-BCA61C298DA3

BM2: 8" SPIKE SET IN BASE OF 24" POPLAR TREE. 24.71' RIGHT OF STA. 14+72.96 -L- = EL. 2297.34

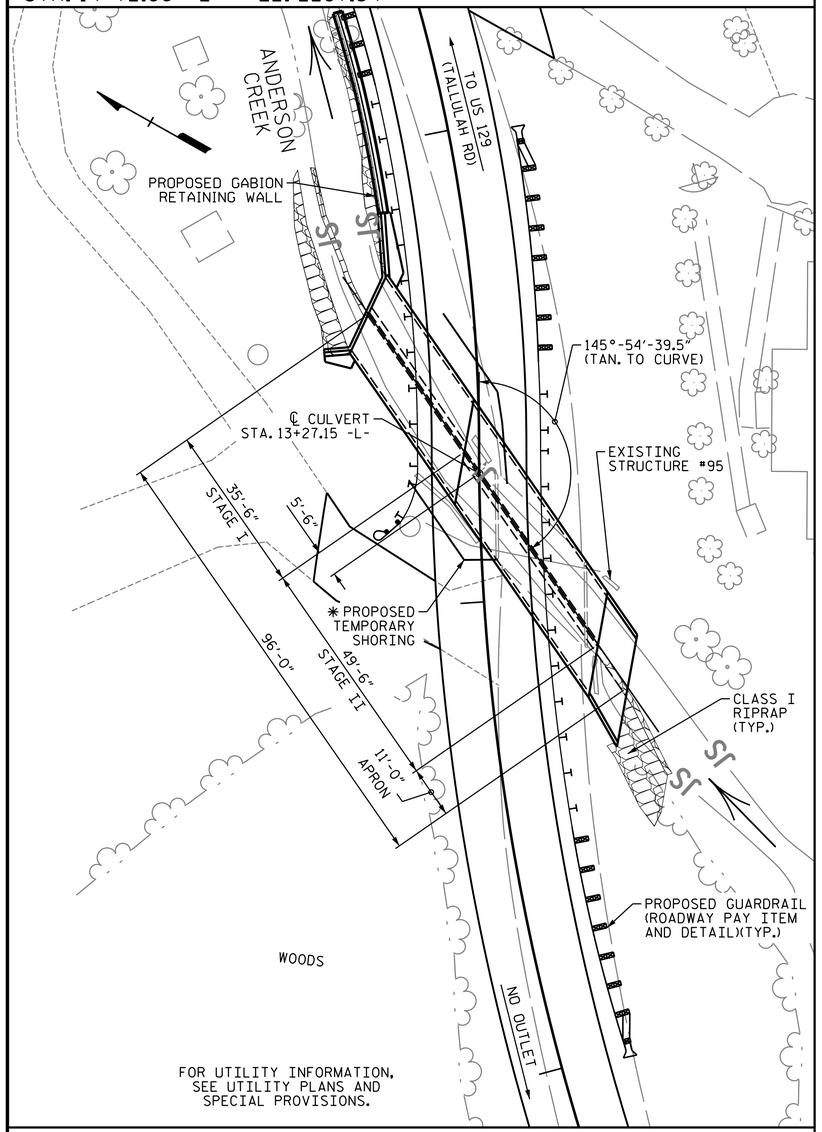

LOCATION SKETCH

NOTES

ASSUMED LIVE LOAD.....HL-93 OR ALTERNATE LOADING.

MAXIMUM DESIGN FILL.....1.4'

MINIMUM DESIGN FILL.....1.12'

FOR OTHER DESIGN DATA AND GENERAL NOTES, SEE SHEET SN.

FOR CULVERT DIVERSION DETAILS, SEE EROSION CONTROL PLANS.

3" Ø WEEP HOLES INDICATED TO BE IN ACCORDANCE WITH THE SPECIFICATIONS.

CONCRETE IN STAGE I OR STAGE II CULVERT TO BE POURED IN THE FOLLOWING ORDER:

1. WING FOOTING AND FLOOR SLAB FOR PHASE I, INCLUDING 4" OF ALL VERTICAL WALLS OF PHASE I.

2. THE REMAINING PORTIONS OF THE WALLS OF PHASE I AND WINGS FULL HEIGHT.

3. WING FOOTING AND FLOOR SLAB FOR PHASE II, INCLUDING 4" OF ALL VERTICAL WALLS OF STAGE II.

4. THE REMAINING PORTIONS OF THE WALLS OF PHASE II AND WINGS FULL HEIGHT.

5. ROOF SLAB AND HEADWALLS OF PHASE II.

THIS STRUCTURE HAS BEEN DESIGNED IN ACCORDANCE WITH "HEC 18- EVALUATING SCOUR AT BRIDGES."

AFTER SERVING AS A TEMPORARY STRUCTURE, THE EXISTING STRUCTURE CONSISTING OF A SINGLE 18'-6" SPAN WITH AN ASPHALT WEARING SURFACE ON A TIMBER DECK AND TIMBER JOISTS HAVING A CLEAR ROADWAY WIDTH OF 18'-0" SUPPORTED ON A SUBSTRUCTURE OF TIMBER CAPS ON TIMBER POSTS AND CONCRETE SILLS SHALL BE REMOVED. THE EXISTING STRUCTURE IS PRESENTLY POSTED FOR LOAD LIMIT. SHOULD THE STRUCTURAL INTEGRITY OF THE BRIDGE DETERIORATE DURING CONSTRUCTION OF THE PROPOSED CULVERT, A LOAD LIMIT MAY BE POSTED AND MAY BE REDUCED AS FOUND NECESSARY DURING THE LIFE OF THE PROJECT.

STEEL IN THE BOTTOM SLAB MAY BE SPLICED AT THE PERMITTED CONSTRUCTION JOINT AT THE CONTRACTOR'S OPTION. EXTRA WEIGHT OF THE STEEL DUE TO THE SPLICES SHALL BE PAID FOR BY THE CONTRACTOR.

AT THE CONTRACTOR'S OPTION, HE MAY SPLICE THE VERTICAL REINFORCING STEEL IN THE INTERIOR FACE OF THE EXTERIOR WALL ABOVE LOWER WALL CONSTRUCTION JOINT. THE SPLICE LENGTH SHALL BE AS PROVIDED IN THE SPLICE LENGTH CHART SHOWN ON THE PLANS. EXTRA WEIGHT OF STEEL DUE TO THE SPLICES SHALL BE PAID FOR BY THE CONTRACTOR.

✱ FOR LIMITS OF TEMPORARY SHORING FOR MAINTENANCE OF TRAFFIC, SEE TRAFFIC CONTROL PLANS. FOR PAY ITEM FOR TEMPORARY SHORING FOR MAINTENANCE OF TRAFFIC, SEE ROADWAY PLANS.

DIMENSIONS FOR WING LAYOUT AS WELL AS ADDITIONAL REINFORCING STEEL EMBEDDED IN BARREL ARE SHOWN ON WING SHEET.

THE SUBSTRUCTURE OF THE EXISTING BRIDGE INDICATED ON THE PLANS IS FROM THE BEST INFORMATION AVAILABLE. SINCE THIS INFORMATION IS SHOWN FOR THE CONVENIENCE OF THE CONTRACTOR, THE CONTRACTOR SHALL HAVE NO CLAIM WHATSOEVER AGAINST THE DEPARTMENT OF TRANSPORTATION FOR ANY DELAYS OR ADDITIONAL COST INCURRED BASED ON DIFFERENCES BETWEEN THE EXISTING BRIDGE SUBSTRUCTURE SHOWN ON THE PLANS AND THE ACTUAL CONDITIONS AT THE PROJECT SITE.

THE EXISTING BRIDGE SHALL BE PARTIALLY REMOVED AS SHOWN IN THE TRAFFIC CONTROL PLANS. THE EXISTING RAIL SHALL BE REMOVED AND REATTACHED TO THE REMAINING PORTION OF THE EXISTING BRIDGE. THE CONTRACTOR SHALL SUBMIT REATTACHMENT DETAILS TO THE ENGINEER FOR APPROVAL PRIOR TO CONSTRUCTION. FOR REMOVAL OF EXISTING STRUCTURE, SEE SPECIAL PROVISIONS.

FOR PROPOSED GABION RETAINING WALL DETAILS, SEE "GABION RETAINING WALL DETAILS" SHEET.

REMOVAL OF THE EXISTING BRIDGE SHALL BE PERFORMED IN A MANNER THAT PREVENTS DEBRIS FROM FALLING INTO THE WATER. THE CONTRACTOR SHALL SUBMIT DEMOLITION PLANS FOR REVIEW AND REMOVE THE BRIDGE IN ACCORDANCE WITH ARTICLE 402-2 OF THE STANDARD SPECIFICATIONS.

FOR SUBMITTAL OF WORKING DRAWINGS, SEE SPECIAL PROVISIONS.

FOR FALSE WORK AND FORMWORK, SEE SPECIAL PROVISIONS.

FOR CRANE SAFETY, SEE SPECIAL PROVISIONS.

FOR GROUT FOR STRUCTURES, SEE SPECIAL PROVISIONS.

THE RESIDENT ENGINEER SHALL CHECK THE LENGTH OF THE CULVERT BEFORE STAKING IT OUT TO MAKE CERTAIN THAT IT WILL PROPERLY TAKE CARE OF THE FILL.

AT THE CONTRACTOR'S OPTION HE MAY SUBMIT, TO THE ENGINEER FOR APPROVAL, DESIGN AND DETAIL DRAWINGS FOR A PRECAST REINFORCED CONCRETE BOX CULVERT IN LIEU OF THE CAST-IN-PLACE CULVERT SHOWN ON THE PLANS. THE DESIGN SHALL PROVIDE THE SAME SIZE AND NUMBER OF BARRELS AS USED ON THE CAST-IN-PLACE DESIGN. FOR OPTIONAL PRECAST REINFORCED CONCRETE BOX CULVERT, SEE SPECIAL PROVISIONS.

TOTAL STRUCTURE QUANTITIES

CLASS A CONCRETE	
STAGE I	64.4 CU. YDS.
STAGE II	89.6 CU. YDS.
TOTAL	154.0 CU. YDS.
REINFORCING STEEL	
STAGE I	7,947 LBS.
STAGE II	11,849 LBS.
TOTAL	19,796 LBS.
CULVERT EXCAVATION	LUMP SUM
FOUNDATION COND. MAT'L.	
STAGE I	41 TONS
STAGE II	70 TONS
TOTAL	111 TONS
REMOVAL OF EXISTING STRUCTURE	LUMP SUM
TEMPORARY EDGE BEAM	LUMP SUM
CLASS I RIPRAP	21 TONS
COIR FIBER MATTING	23.0 SQ. YDS.

I HEREBY CERTIFY THESE PLANS ARE THE AS-BUILT PLANS

HYDRAULIC DATA

DESIGN DISCHARGE	= 250 CFS
FREQUENCY OF DESIGN FLOOD	= 5 YEARS
DESIGN HIGH WATER ELEVATION	= 2305.1
DRAINAGE AREA	= 1.3 SQ.MI.
BASE DISCHARGE (Q100)	= 700 CFS
BASE HIGH WATER ELEVATION	= 2306.92

OVERTOPPING DATA

OVERTOPPING DISCHARGE	= 280 CFS
FREQUENCY OF OVERTOPPING FLOOD	= 5+ YEARS
OVERTOPPING FLOOD ELEVATION	= 2305.3

HORIZONTAL CURVE DATA

PI STA 11+94.57
Δ = 32°-37'-32.3" (RT)
D = 11°-30'-00.0"
L = 283.70'
T = 145.81'
R = 498.22'

PI STA 13+96.70
Δ = 20°-57'-36.8" (LT)
D = 16°-30'-00.0"
L = 127.03'
T = 64.23'
R = 347.25'

GRADE DATA

GRADE POINT ELEV. @ STA. 13+27.15 -L-	= 2303.22
INVERT ELEV. @ STA. 13+27.15 -L-	= 2296.06
ROADWAY SIDE SLOPES	= 2:1

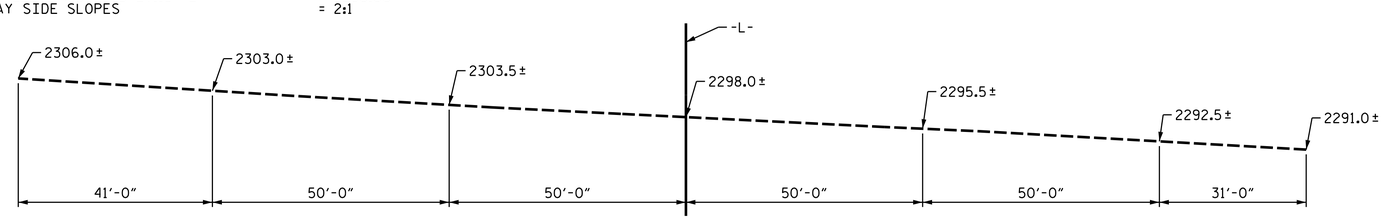

PROFILE ALONG ℄ CULVERT

PROJECT NO. 17BP.14.R.91
GRAHAM COUNTY
STATION: 13+27.15 -L-

REPLACES BRIDGE #95

STATE OF NORTH CAROLINA
DEPARTMENT OF TRANSPORTATION
RALEIGH

DOUBLE 7 FT. X 4.0 FT CONCRETE BOX CULVERT 154°-54'-39.5" SKEW

WSP USA Inc.
434 FAYETTEVILLE STREET
SUITE 1500
RALEIGH, NC 27601
TEL: 1.919.836.4040
LICENSE NO. F-0165

NORTH CAROLINA PROFESSIONAL SEAL ENGINEER NICHOLAS A. PIERCE
9/7/2017

DOCUMENT NOT CONSIDERED FINAL UNLESS ALL SIGNATURES COMPLETED

REVISIONS						SHEET NO.
NO.	BY:	DATE:	NO.	BY:	DATE:	C-1
1			3			TOTAL SHEETS
2			4			13

DRAWN BY : M.J. OSTRISHKO DATE : 10/2014
CHECKED BY : N.A. PIERCE DATE : 11/2014

8/24/2017
R:\Raleigh Office NCDOT\17BP GROUP 1\17BP.14.R.91_370095\Structures\Drafting\410_001_17BP.14.R.91_SMU_CU01.dgn
usmo04281

DocuSign Envelope ID: BEA82789-CCD9-4CBA-8A50-BCA61C298DA3

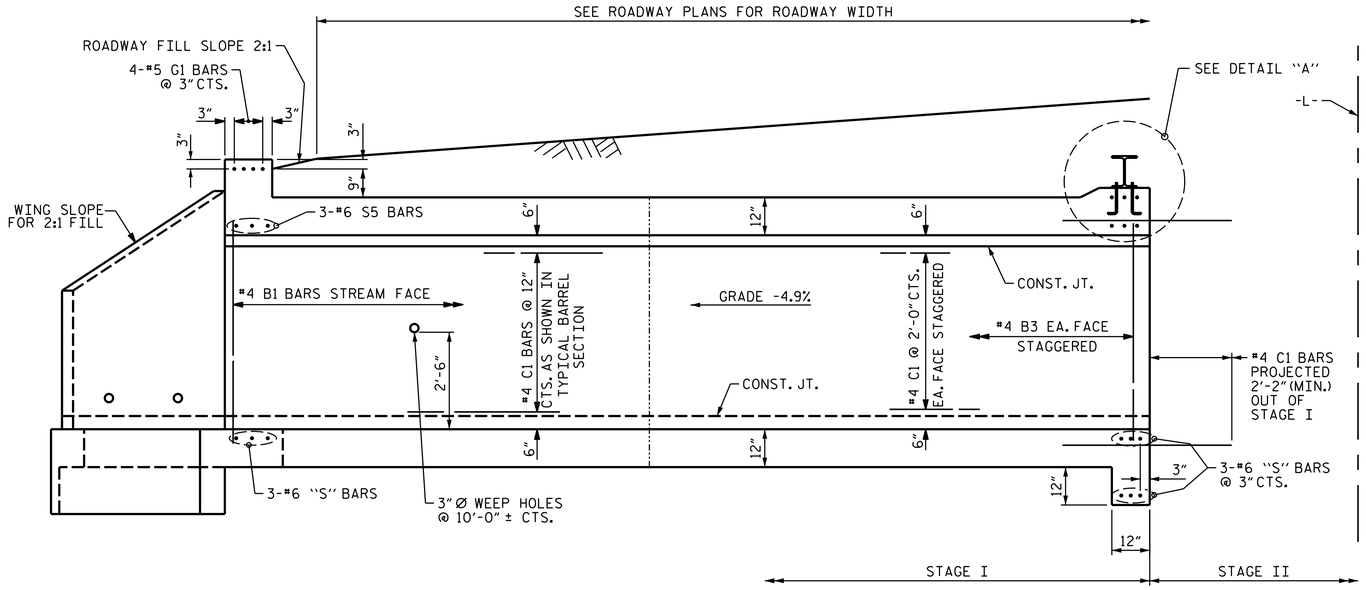

EXTERIOR WALL INTERIOR WALL

CULVERT SECTION NORMAL TO ROADWAY

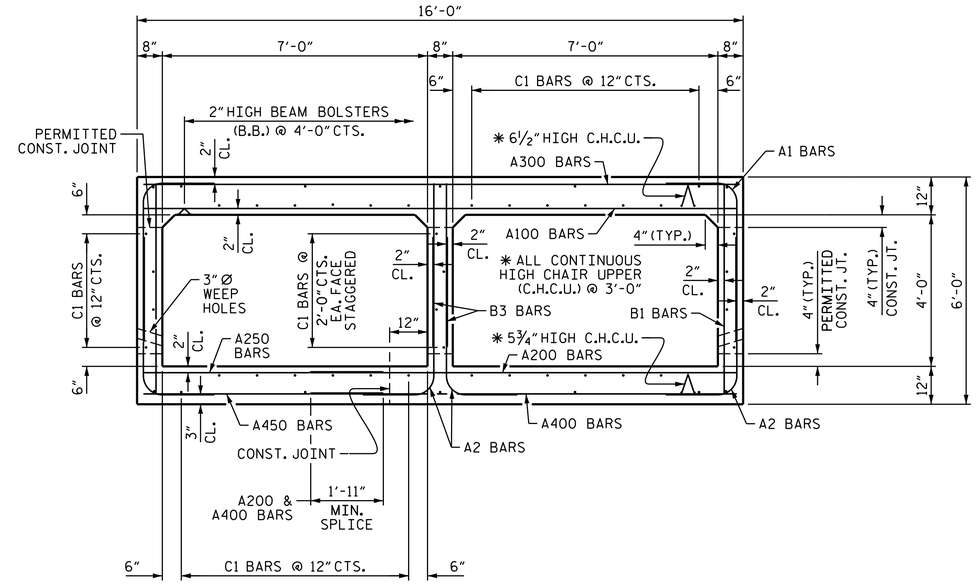

RIGHT ANGLE SECTION OF BARREL

THERE ARE 50 "C" BARS IN SECTION OF BARREL.

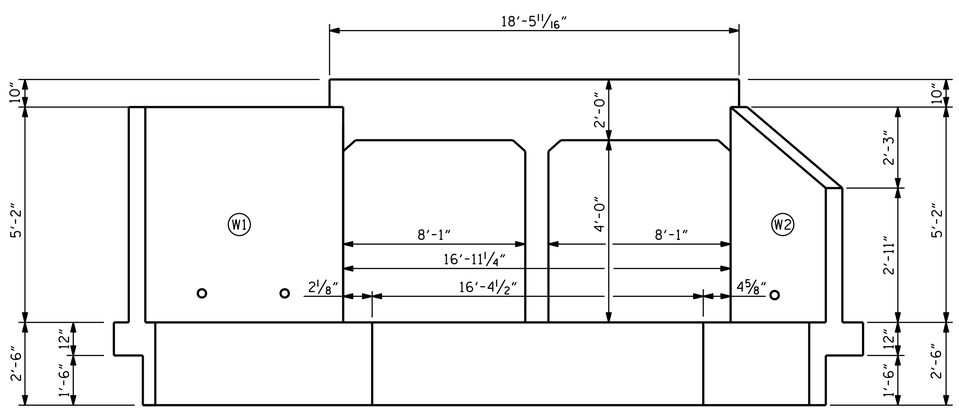

END ELEVATION NORMAL TO SKEW

(LOOKING UPSTREAM)

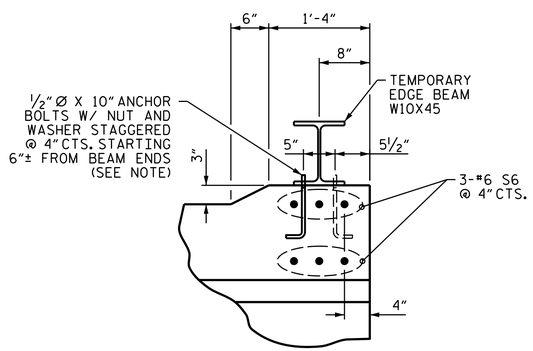

NOTE: AFTER STAGE 2 IS COMPLETE, THE BEAM SHALL BE REMOVED AND ANCHOR BOLTS CUT SMOOTH AND EPOXY APPLIED TO EXPOSED BOLTS TO PREVENT CORROSION.

DETAIL "A"

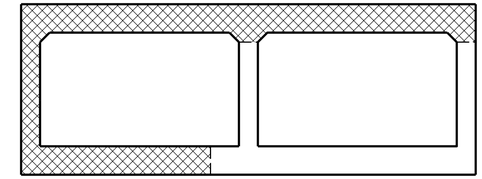

CONSTRUCTION PHASING - STAGE I

LOOKING UPSTREAM

PHASE I CONSTRUCTION

PHASE II CONSTRUCTION

PROJECT NO. 17BP.14.R.91

GRAHAM COUNTY

STATION: 13+27.15 -L-

I HEREBY CERTIFY THESE PLANS ARE THE AS-BUILT PLANS

WSP USA Inc.
434 FAYETTEVILLE STREET
SUITE 1500
RALEIGH, NC 27601
TEL: 1.919.836.4040
LICENSE NO. F-0165

SEAL NORTH CAROLINA PROFESSIONAL ENGINEER NICHOLAS A. PIERCE
9/7/2017

DOCUMENT NOT CONSIDERED FINAL UNLESS ALL SIGNATURES COMPLETED

STATE OF NORTH CAROLINA
DEPARTMENT OF TRANSPORTATION
RALEIGH

DOUBLE 7 FT.X 4 FT. CONCRETE BOX CULVERT STAGE I

REVISIONS						SHEET NO.
NO.	BY:	DATE:	NO.	BY:	DATE:	C-2
1			3			TOTAL SHEETS
2			4			13

DRAWN BY : M.J. OSTRISHKO DATE : 10/2014
CHECKED BY : N.A. PIERCE DATE : 11/2014

8/21/2017
R:\Raleigh Office NCDOT\17BP GROUP 1\17BP.14.R.91_370095\Structures\Drafting\410_002_17BP.14.R.91_SMU_CU02.dgn
usmo04281

DocuSign Envelope ID: BEA82789-CCD9-4CBA-8A50-BCA61C298DA3

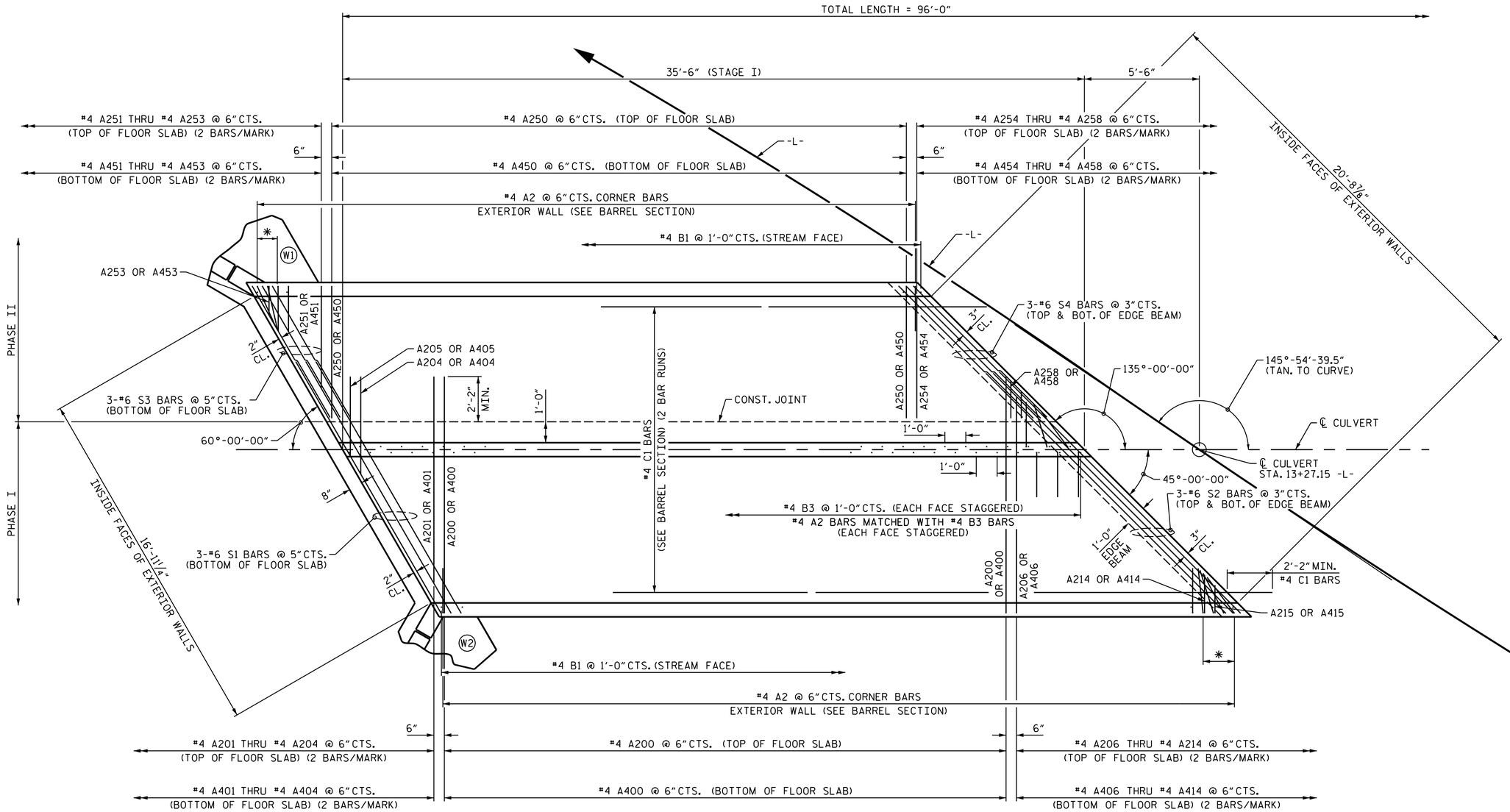

PLAN OF FLOOR SLAB

* DENOTES SPLAYED A2 BARS @ 6"CTS. WITH 2"MIN. CLEAR AT BAR ENDS.

PROJECT NO. 17BP.14.R.91
GRAHAM COUNTY
STATION: 13+27.15 -L-

STATE OF NORTH CAROLINA
DEPARTMENT OF TRANSPORTATION
RALEIGH

DOUBLE 7 FT.X 4 FT. CONCRETE BOX CULVERT STAGE I

WSP USA Inc.
434 FAYETTEVILLE STREET
SUITE 1500
RALEIGH, NC 27601
TEL: 1.919.836.4040
LICENSE NO. F-0165

NORTH CAROLINA PROFESSIONAL SEAL 037429 ENGINEER NICHOLAS A. PIERCE
Digitally signed by: Nicholas Pierce
135884830B847C...
9/7/2017

DOCUMENT NOT CONSIDERED FINAL UNLESS ALL SIGNATURES COMPLETED

REVISIONS								SHEET NO.
NO.	BY:	DATE:	NO.	BY:	DATE:			C-3
1			3					TOTAL SHEETS
2			4					13

DRAWN BY : M.J. OSTRISHKO DATE : 10/2014
CHECKED BY : N.A. PIERCE DATE : 11/2014

8/21/2017
R:\Raleigh Office NCDOT\17BP GROUP 1\17BP.14.R.91_370095\Structures\Drafting\410_003_17BP.14.R.91_SMU_CU03.dgn
usmo04281

DocuSign Envelope ID: BEA82789-CCD9-4CBA-8A50-BCA61C298DA3

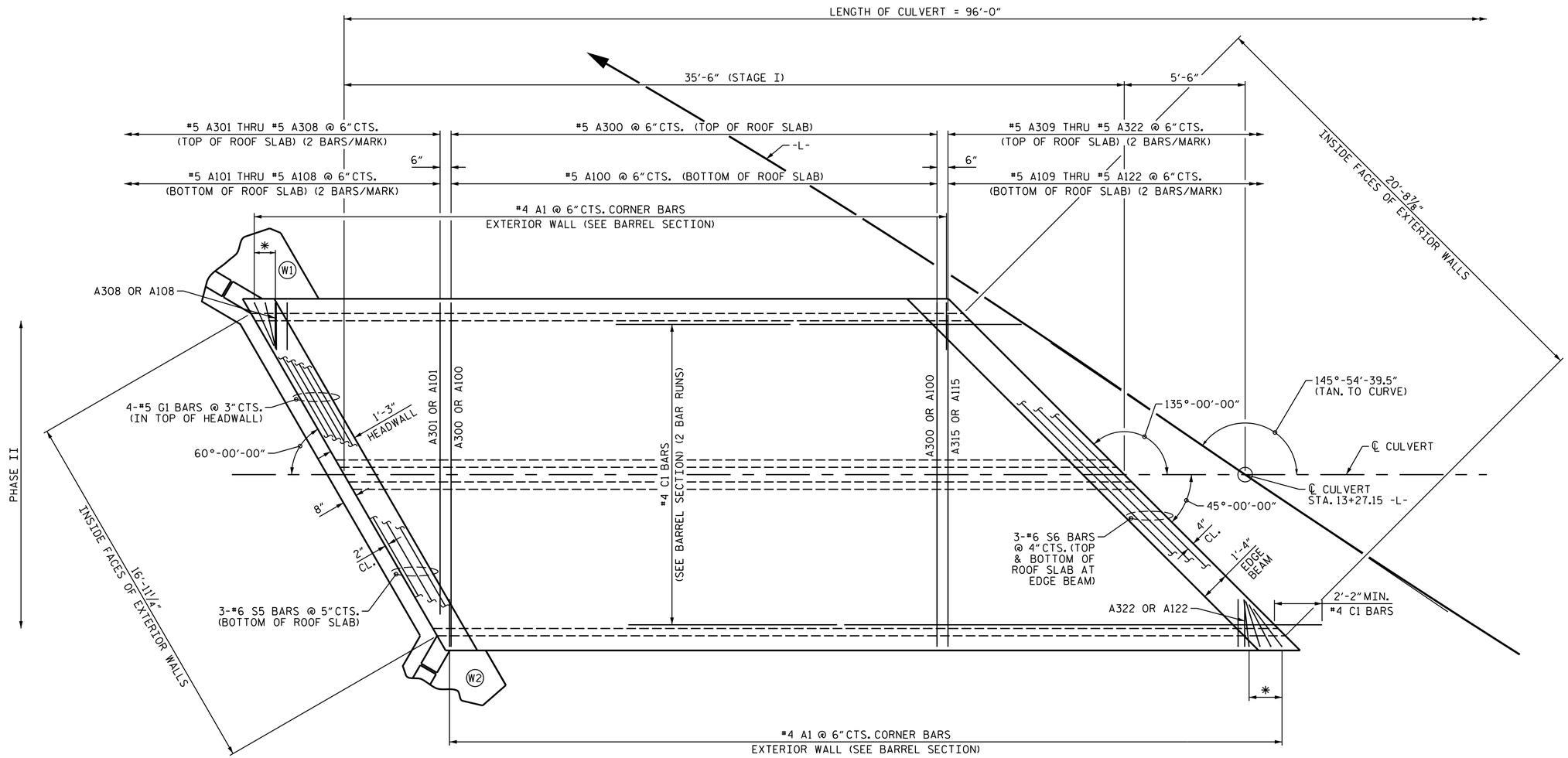

PLAN OF ROOF SLAB

* DENOTES SPLAYED A1 BARS @ 6"CTS. WITH 2" MIN. CLEAR AT BAR ENDS.

PROJECT NO. 17BP.14.R.91

GRAHAM COUNTY

STATION: 13+27.15 -L-

STATE OF NORTH CAROLINA
DEPARTMENT OF TRANSPORTATION
RALEIGH

DOUBLE 7 FT.X 4 FT. CONCRETE BOX CULVERT STAGE I

WSP USA Inc.
434 FAYETTEVILLE STREET
SUITE 1500
RALEIGH, NC 27601
TEL: 1.919.836.4040

LICENSE NO. F-0165

NORTH CAROLINA PROFESSIONAL SEAL 030439 ENGINEER NICHOLAS A. PIERCE

9/7/2017

DOCUMENT NOT CONSIDERED FINAL UNLESS ALL SIGNATURES COMPLETED

REVISIONS						SHEET NO.
NO.	BY:	DATE:	NO.	BY:	DATE:	C-4
1			3			TOTAL SHEETS
2			4			13

DRAWN BY : M.J. OSTRISHKO DATE : 10/2014
CHECKED BY : N.A. PIERCE DATE : 11/2014

8/21/2017
R:\Raleigh Office NCDOT\17BP GROUP 1\17BP.14.R.91_370095\Structures\Drafting\410_004_17BP.14.R.91_SMU_CU04.dgn
usmo04281

DocuSign Envelope ID: BEA82789-CCD9-4CBA-8A50-BCA61C298DA3

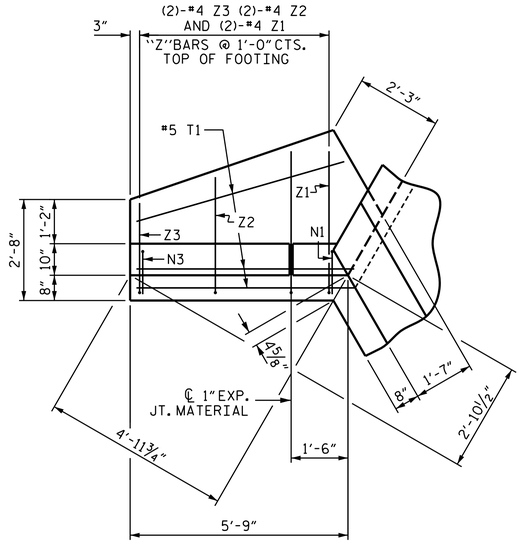

PLAN W2

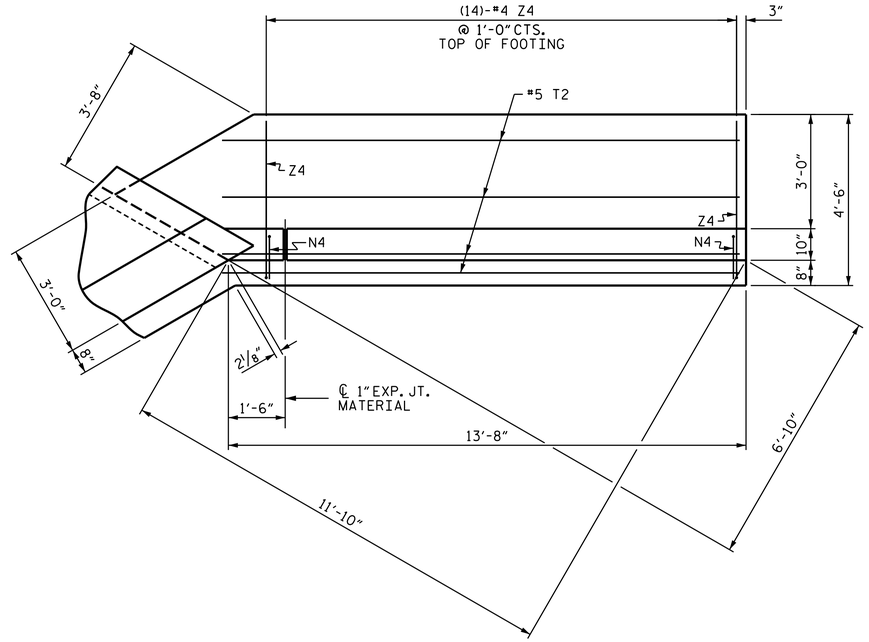

PLAN W1

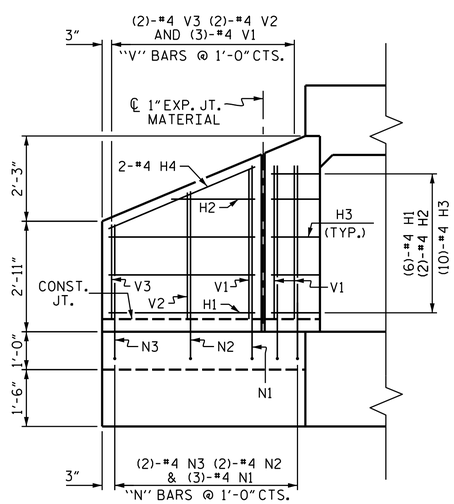

ELEVATION W2

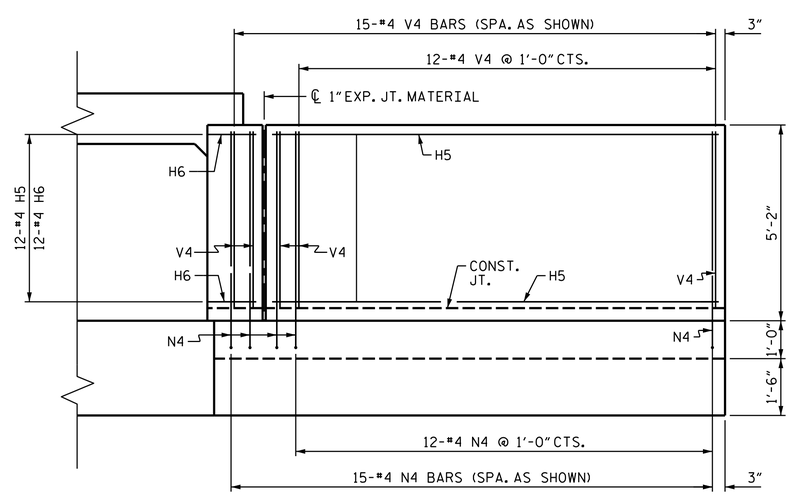

ELEVATION W1

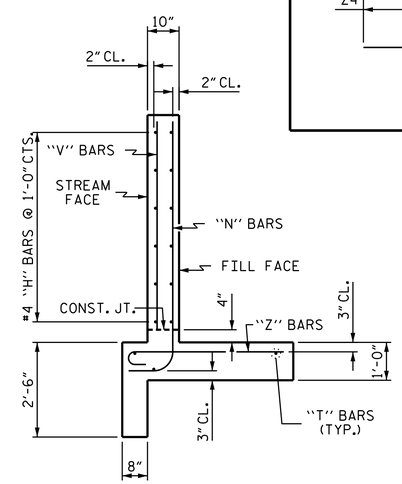

TYPICAL WING SECTION

BAR TYPES

ALL BAR DIMENSIONS ARE OUT TO OUT.

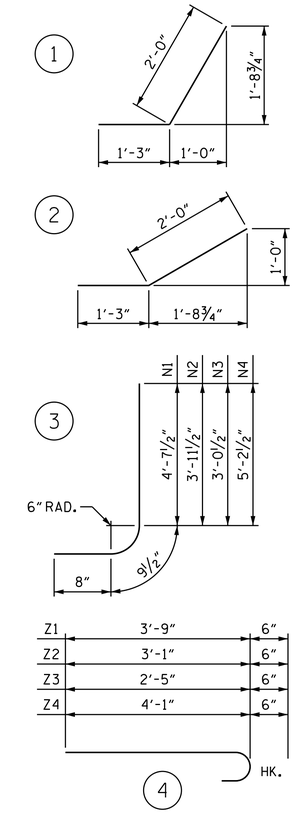

BILL OF MATERIAL

BAR	NO.	SIZE	TYPE	LENGTH	WEIGHT
H1	6	#4	STR	3'-10"	15
H2	2	#4	STR	2'-2"	3
H3	10	#4	1	3'-3"	22
H4	2	#4	STR	4'-2"	6
H5	12	#4	STR	11'-9"	94
H6	12	#4	2	3'-3"	26
N1	3	#4	3	6'-1"	12
N2	2	#4	3	5'-5"	7
N3	2	#4	3	4'-6"	6
N4	15	#4	3	6'-8"	67
T1	3	#5	STR	5'-9"	18
T2	4	#5	STR	13'-8"	57
V1	3	#4	STR	4'-0"	8
V2	2	#4	STR	3'-4"	4
V3	2	#4	STR	2'-6"	3
V4	15	#4	STR	4'-8"	47
Z1	2	#4	4	4'-3"	6
Z2	2	#4	4	3'-7"	5
Z3	2	#4	4	2'-11"	4
Z4	14	#4	4	4'-7"	43

REINFORCING STEEL
FOR 2 WINGS 453 LBS

CLASS A CONCRETE (STAGE 1)

2 WINGS	6.0	CY
1 HEADWALL	0.9	CY
1 END CURTAIN WALLS	1.3	CY
2 EDGE BEAMS	1.2	CY
TOTAL	9.4	CY

PROJECT NO. 17BP.14.R.91
GRAHAM COUNTY
STATION: 13+27.15 -L-

STATE OF NORTH CAROLINA
DEPARTMENT OF TRANSPORTATION
RALEIGH

OUTLET WINGS FOR DOUBLE 7 FT. X 4 FT. CONCRETE BOX CULVERT STAGE I

WSP USA Inc.
434 FAYETTEVILLE STREET
SUITE 1500
RALEIGH, NC 27601
TEL: 1.919.836.4040
LICENSE NO. F-0165

NORTH CAROLINA PROFESSIONAL SEAL 035470 ENGINEER NICHOLAS A. PIERCE
DocuSigned by: Nicholas Pierce
9/7/2017

DOCUMENT NOT CONSIDERED FINAL UNLESS ALL SIGNATURES COMPLETED

REVISIONS							SHEET NO.
NO.	BY:	DATE:	NO.	BY:	DATE:		C-5
1			3				TOTAL SHEETS
2			4				13

DRAWN BY : M.J. OSTRISHKO DATE : 10/2014
CHECKED BY : N.A. PIERCE DATE : 11/2014

8/21/2017
R:\Raleigh Office NCDOT\17BP GROUP 1\17BP.14.R.91_370095\Structures\Drafting\410_005_17BP.14.R.91_SMU_CU05.dgn
usmo04281

DocuSign Envelope ID: BEA82789-CCD9-4CBA-8A50-BCA61C298DA3

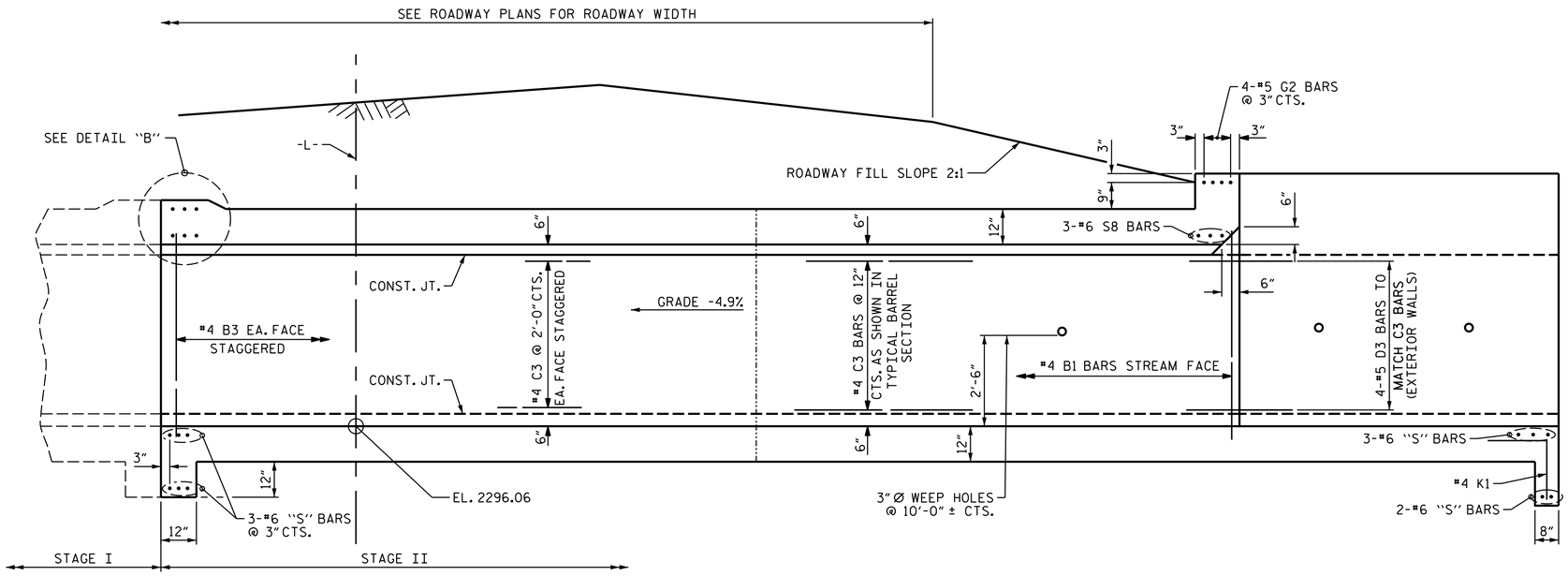

EXTERIOR WALL INTERIOR WALL

CULVERT SECTION NORMAL TO ROADWAY

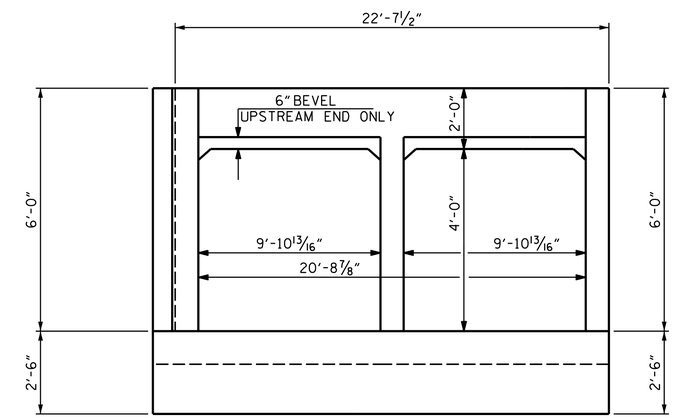

END ELEVATION NORMAL TO SKEW

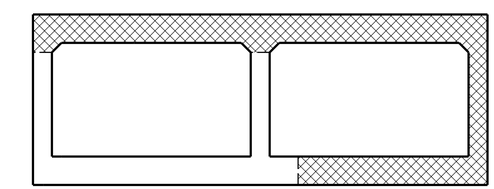

CONSTRUCTION PHASING - STAGE II

LOOKING UPSTREAM

PHASE I CONSTRUCTION

PHASE II CONSTRUCTION

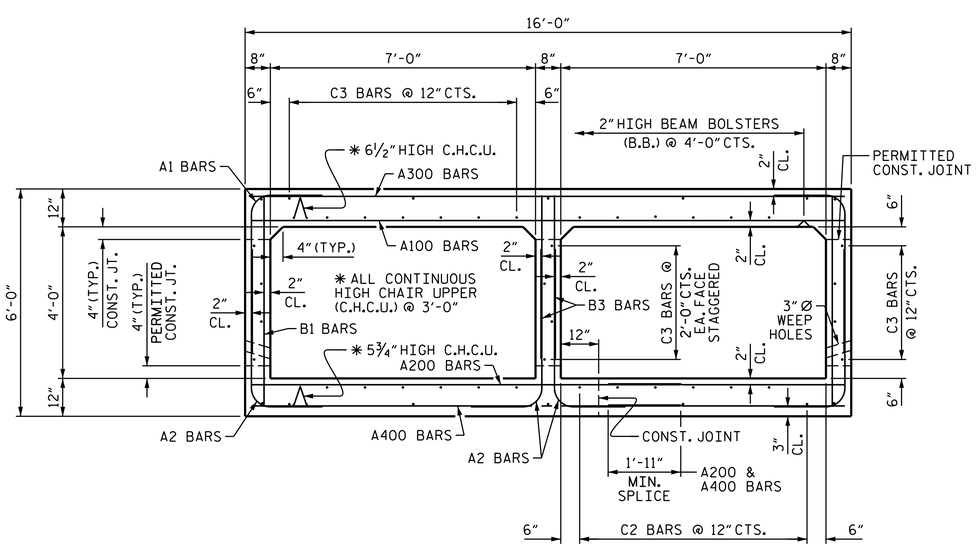

RIGHT ANGLE SECTION OF BARREL

THERE ARE 50 "C" BARS IN SECTION OF BARREL.

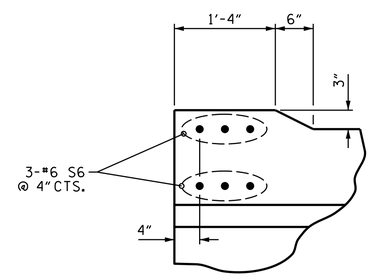

DETAIL "B"

PROJECT NO. 17BP.14.R.91

GRAHAM COUNTY

STATION: 13+27.15 -L-

STATE OF NORTH CAROLINA
DEPARTMENT OF TRANSPORTATION
RALEIGH

DOUBLE 7 FT.X 4 FT. CONCRETE BOX CULVERT STAGE II

WSP USA Inc.
434 FAYETTEVILLE STREET
SUITE 1500
RALEIGH, NC 27601
TEL: 1.919.836.4040
LICENSE NO. F-0165

NORTH CAROLINA PROFESSIONAL SEAL 025472 ENGINEER NICHOLAS A. PIERCE

DocuSigned by: 1A1D8B4B3DB8BB...

9/7/2017

DOCUMENT NOT CONSIDERED FINAL UNLESS ALL SIGNATURES COMPLETED

REVISIONS							
NO.	BY:	DATE:	NO.	BY:	DATE:		
1			3				
2			4				

SHEET NO. C-6

TOTAL SHEETS 13

DRAWN BY : M.J. OSTRISHKO DATE : 10/2014
CHECKED BY : N.A. PIERCE DATE : 11/2014

8/21/2017
R:\Raleigh Office NCDOT\17BP GROUP 1\17BP.14.R.91_370095\Structures\Drafting\410_006_17BP.14.R.91_SMU_CU06.dgn
usmo04281

DocuSign Envelope ID: BEA82789-CCD9-4CBA-8A50-BCA61C298DA3

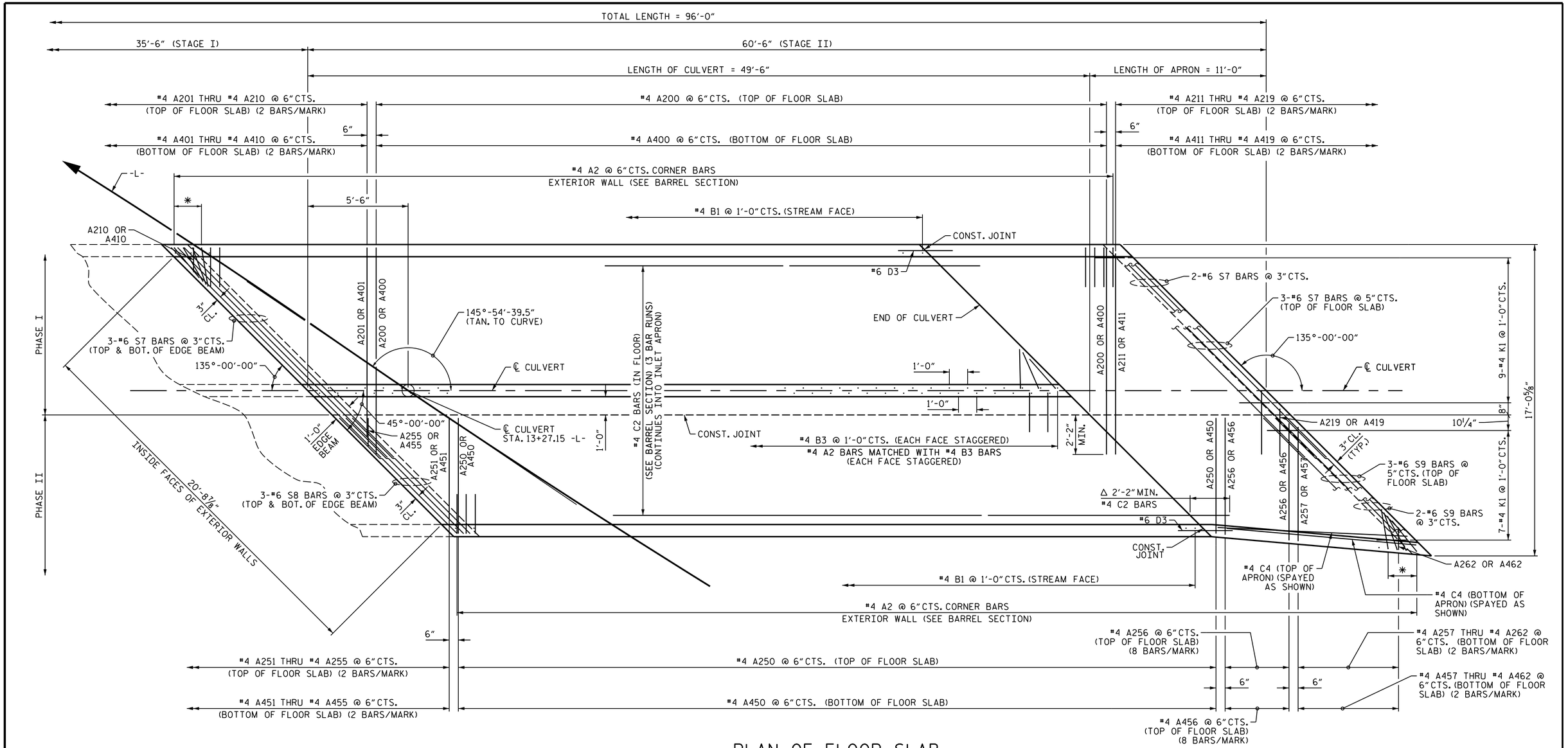

PLAN OF FLOOR SLAB

✱ DENOTES SPLAYED A2 BARS @ 6"CTS. WITH 2"MIN. CLEAR AT BAR ENDS.
Δ FIELD BEND #4 C2 BARS IN THE FLOOR AND #4 C3 AS NEEDED IN THE EXTERIOR WALLS.
FOR ADDITIONAL REINFORCING STEEL IN INLET WINGS AND APRON REFER TO SHEET C-9.

PROJECT NO. 17BP.14.R.91
GRAHAM COUNTY
STATION: 13+27.15 -L-

STATE OF NORTH CAROLINA
DEPARTMENT OF TRANSPORTATION
RALEIGH

DOUBLE 7 FT.X 4 FT. CONCRETE BOX CULVERT STAGE II

WSP USA Inc.
434 FAYETTEVILLE STREET
SUITE 1500
RALEIGH, NC 27601
TEL: 1.919.836.4040
LICENSE NO. F-0165

NORTH CAROLINA PROFESSIONAL SEAL ENGINEER NICHOLAS A. PIERCE
DocuSigned by: Nicholas Pierce
9/7/2017

DOCUMENT NOT CONSIDERED FINAL UNLESS ALL SIGNATURES COMPLETED

REVISIONS						SHEET NO.
NO.	BY:	DATE:	NO.	BY:	DATE:	C-7
1			3			TOTAL SHEETS
2			4			13

DRAWN BY : M.J. OSTRISHKO DATE : 10/2014
CHECKED BY : N.A. PIERCE DATE : 11/2014

8/23/2017
R:\Raleigh Office NCDOT\17BP GROUP 1\17BP.14.R.91_370095\Structures\Drafting\410_007_17BP.14.R.91_SMU_CU07.dgn
usmo04281

DocuSign Envelope ID: BEA82789-CCD9-4CBA-8A50-BCA61C298DA3

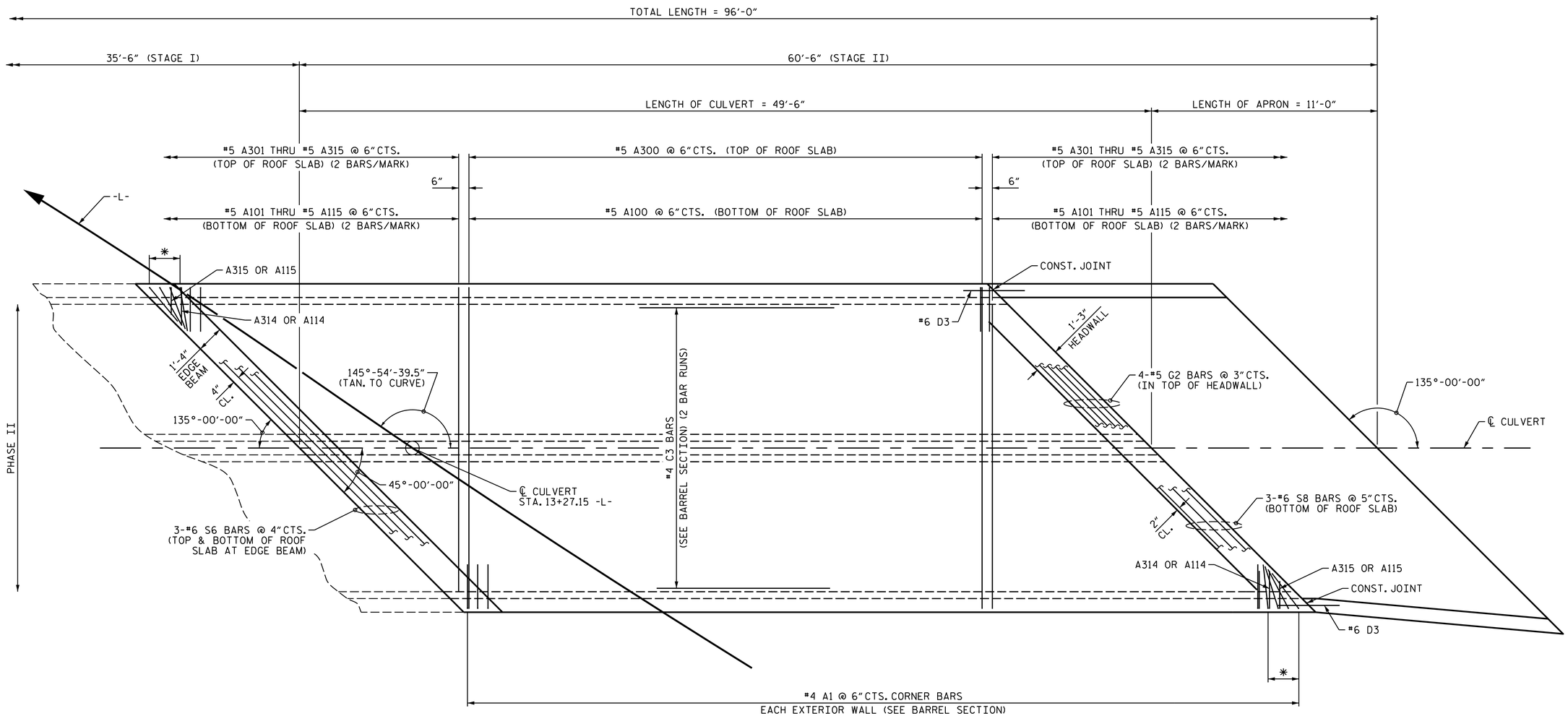

PLAN OF ROOF SLAB

* DENOTES SPLAYED A1 BARS @ 6"CTS. WITH 2" MIN. CLEAR AT BAR ENDS.

PROJECT NO. 17BP.14.R.91

GRAHAM COUNTY

STATION: 13+27.15 -L-

STATE OF NORTH CAROLINA
DEPARTMENT OF TRANSPORTATION
RALEIGH

DOUBLE 7 FT.X 4 FT. CONCRETE BOX CULVERT STAGE II

WSP USA Inc.
434 FAYETTEVILLE STREET
SUITE 1500
RALEIGH, NC 27601
TEL: 1.919.836.4040

LICENSE NO. F-0165

NORTH CAROLINA PROFESSIONAL SEAL 037893 ENGINEER NICHOLAS A. PIERCE

DocuSigned by: 4F3588A8CB8A4A...

9/7/2017

DOCUMENT NOT CONSIDERED FINAL UNLESS ALL SIGNATURES COMPLETED

REVISIONS						SHEET NO.
NO.	BY:	DATE:	NO.	BY:	DATE:	C-8
1			3			TOTAL SHEETS
2			4			13

DRAWN BY : M.J. OSTRISHKO DATE : 10/2014
CHECKED BY : N.A. PIERCE DATE : 11/2014

8/21/2017
R:\Raleigh Office NCDOT\17BP GROUP 1\17BP.14.R.91_370095\Structures\Drafting\410_008_17BP.14.R.91_SMU_CU08.dgn
usmo04281

DocuSign Envelope ID: BEA82789-CCD9-4CBA-8A50-BCA61C298DA3

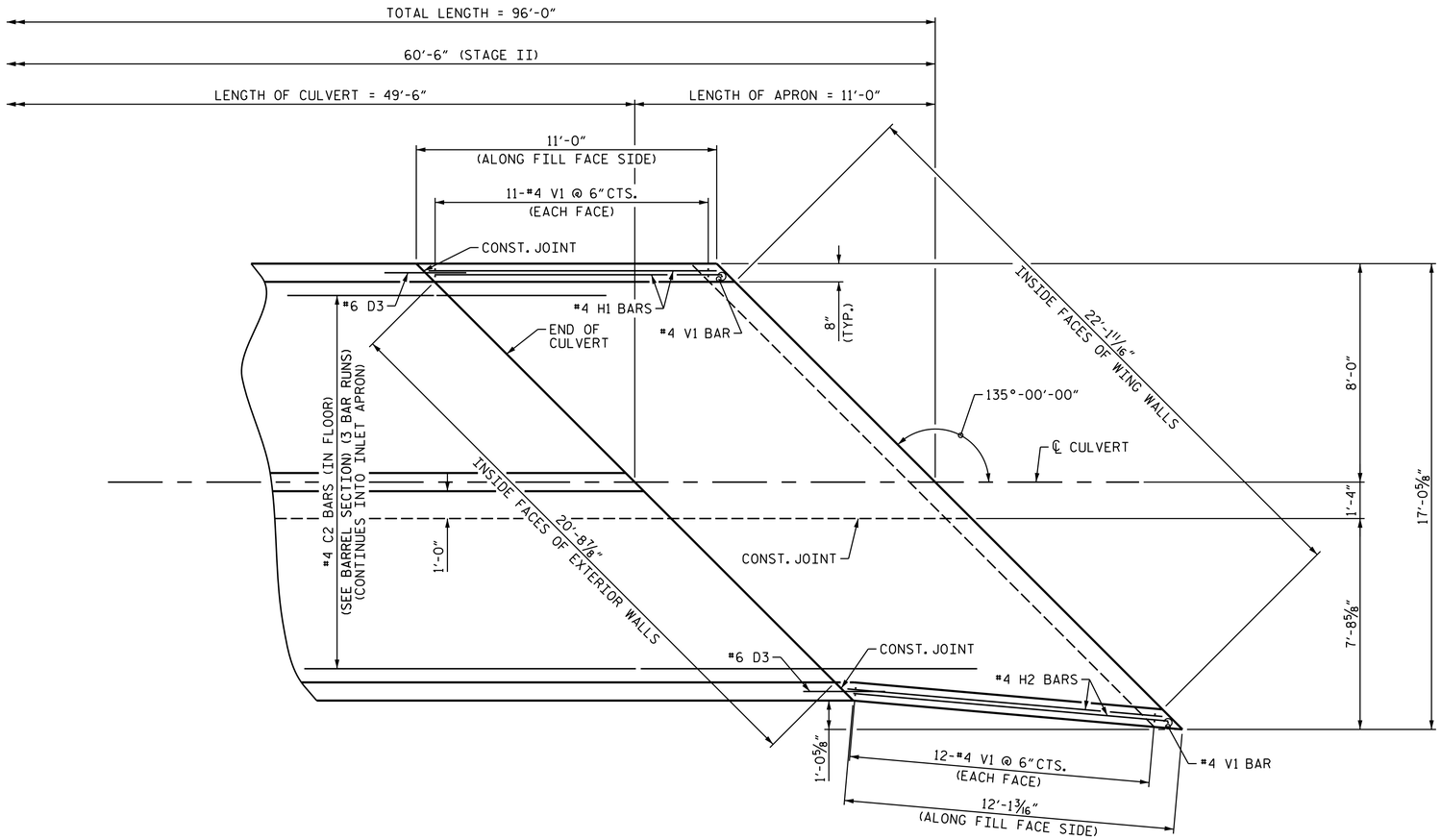

PLAN OF INLET WING

SOME BARS IN THE APRON ARE OMITTED FOR CLARITY, SEE C-7 OF 13 FOR MISSING BARS.

BILL OF MATERIAL					
BAR	NO.	SIZE	TYPE	LENGTH	WEIGHT
H1	14	#4	STR	10'-7"	99
H2	14	#4	STR	11'-7"	108
V1	46	#4	STR	5'-5"	166

REINFORCING STEEL FOR 2 WINGS 373 LBS

CLASS A CONCRETE (STAGE 2)

2 WINGS	3.4	CY
1 HEADWALL	1.0	CY
1 APRON AND END CURTAIN WALL	7.6	CY
2 EDGE BEAMS	1.2	CY
TOTAL	13.2	CY

NOTE:
QUANTITIES FOR THE FOLLOWING BARS ARE INCLUDED IN THE REINFORCING STEEL BAR SCHEDULE:

#4 A2
#4 A200
#4 A211 THRU A219
#4 A250
#4 A256 THRU A262
#4 A400
#4 A411 THRU A419
#4 A450
#4 A456 THRU A462
#4 C2
#6 D3
#4 K1
#6 S7
#6 S9

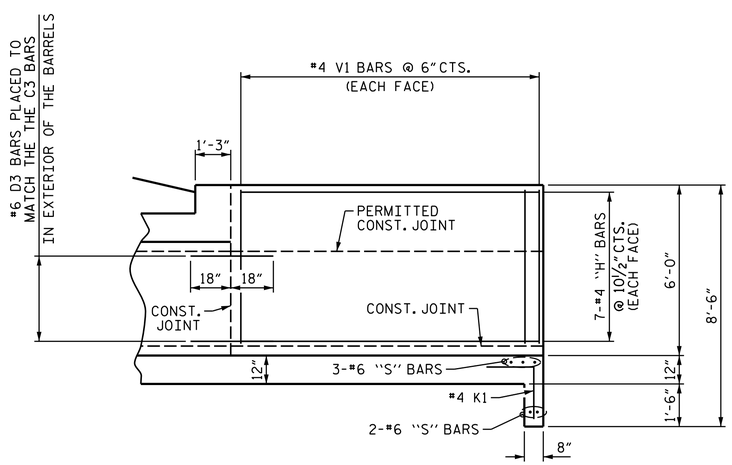

INLET WING SECTION

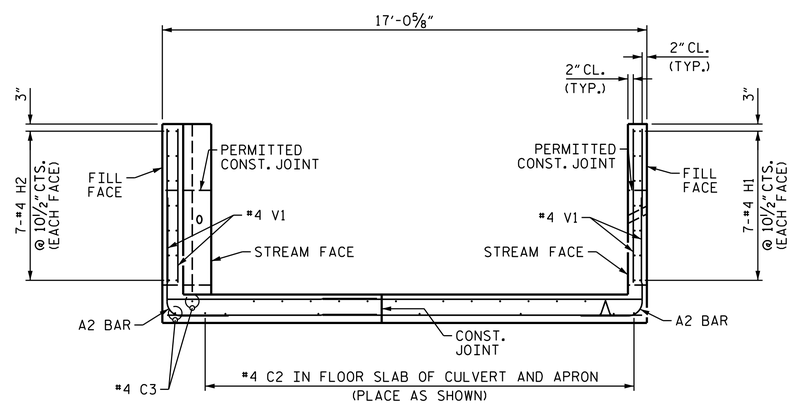

TYPICAL WING SECTION

(LOOKING DOWNSTREAM)

PROJECT NO. 17BP.14.R.91
GRAHAM COUNTY
STATION: 13+27.15 -L-

STATE OF NORTH CAROLINA
DEPARTMENT OF TRANSPORTATION
RALEIGH

INLET WINGS FOR CONCRETE BOX CULVERT STAGE II

WSP USA Inc.
434 FAYETTEVILLE STREET
SUITE 1500
RALEIGH, NC 27601
TEL: 1.919.836.4040
LICENSE NO. F-0165

NORTH CAROLINA PROFESSIONAL ENGINEER SEAL 037474 NICHOLAS A. PIERCE
DocuSigned by: Nicholas Pierce
C13B8B4B3B847C...
9/7/2017

DOCUMENT NOT CONSIDERED FINAL UNLESS ALL SIGNATURES COMPLETED

REVISIONS						SHEET NO.
NO.	BY:	DATE:	NO.	BY:	DATE:	C-9
1			3			TOTAL SHEETS
2			4			13

DRAWN BY : M.J. OSTRISHKO DATE : 10/2014
CHECKED BY : N.A. PIERCE DATE : 11/2014

8/23/2017
R:\Raleigh Office NCDOT\17BP GROUP 1\17BP.14.R.91_370095\Structures\Drafting\410_009_17BP.14.R.91_SMU_CU09.dgn
usmo04281

DocuSign Envelope ID: BEA82789-CCD9-4CBA-8A50-BCA61C298DA3

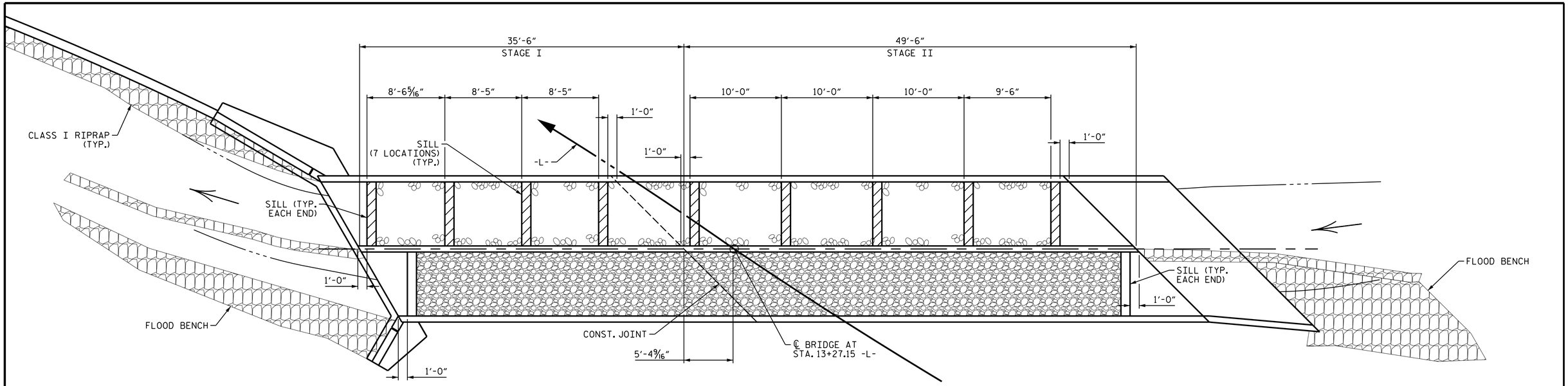

PLAN OF CULVERT SILL LAYOUT

LOW FLOW SILLS DENOTED BY CROSSHATCHED AREA.

NATIVE MATERIAL IN HIGH FLOW SILL

NATIVE MATERIAL IN LOW FLOW SILL

NOTES

NATIVE MATERIAL EXCAVATED FROM THE EXISTING STREAM BED OR FLOOD PLAIN AT THE PROJECT SITE DURING CULVERT CONSTRUCTION SHALL BE STOCKPILED AND LATER PLACED IN THE PROPOSED CULVERT BETWEEN SILLS TO PROVIDE A CONTINUOUS LOW FLOW BARREL. NATIVE MATERIAL IS SUBJECT TO APPROVAL BY THE ENGINEER AND MAY BE SUBJECT TO PERMIT CONDITIONS.

THE STOCKPILED NATIVE MATERIAL SHALL BE PLACED AS SHOWN IN THE "PLAN OF FLOOR SILL LAYOUT" SKETCH TO PROVIDE A 1'-6" DEPTH LOW FLOW CHANNEL BETWEEN LOW FLOW SILLS, AND SHALL BE PLACED TO THE DEPTH OF 2'-0" BETWEEN HIGH FLOW SILLS.

SUPPLEMENTAL STONE OF SIMILAR CHARACTERISTIC OF THE NATIVE MATERIAL MAYBE USED AS NECESSARY WITH APPROVAL BY ENGINEER.

THE ENTIRE COST OF WORK REQUIRED TO PLACE THE EXCAVATED MATERIAL SHALL BE INCLUDED IN THE CONTRACT LUMP SUM PRICE BID FOR CULVERT EXCAVATION.

THE ENTIRE COST OF WORK REQUIRED TO CONSTRUCT THE SILLS SHALL BE INCLUDED IN THE VARIOUS PAY ITEMS.

TOP OF LOW FLOW SILLS SHOULD MATCH STREAM BED ELEVATION IN LOW FLOW CHANNEL OF STREAM. (THALWEG)

DO NOT SET ELEVATION OF HIGH SILL ABOVE BANK FULL.

NUMBER OF SILLS DETERMINED BY THE ENGINEER.

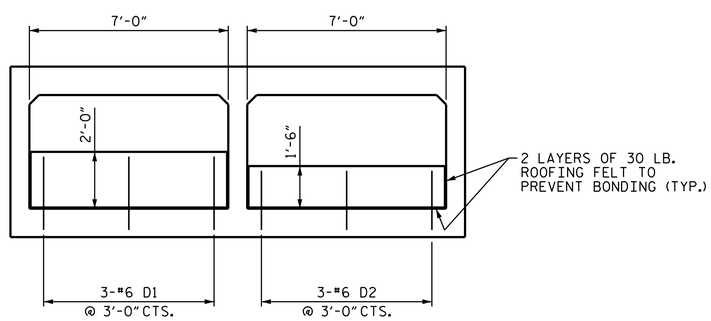

ELEVATION

LOOKING DOWNSTREAM

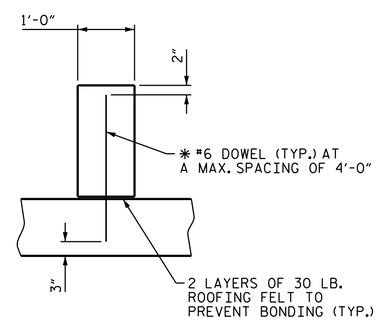

SECTION THROUGH SILL

* DOWELS MAY BE PUSHED INTO GREEN CONCRETE AFTER SLAB HAS BEEN FLOAT FINISHED

CULVERT SILL DETAILS

PROJECT NO. 17BP.14.R.91

GRAHAM COUNTY

STATION: 13+27.15 -L-

STATE OF NORTH CAROLINA
DEPARTMENT OF TRANSPORTATION
RALEIGH

DOUBLE 7 FT. X 4 FT. CONCRETE BOX CULVERT CULVERT SILL PLAN & DETAILS STAGES I & II

WSP USA Inc.
434 FAYETTEVILLE STREET
SUITE 1500
RALEIGH, NC 27601
TEL: 1.919.836.4040
LICENSE NO. F-0165

NORTH CAROLINA PROFESSIONAL SEAL ENGINEER NICHOLAS A. PIERCE

DocuSigned by: Nicholas Pierce 03358483DB849C...

9/7/2017

DOCUMENT NOT CONSIDERED FINAL UNLESS ALL SIGNATURES COMPLETED

REVISIONS						SHEET NO.
NO.	BY:	DATE:	NO.	BY:	DATE:	C-10
1			3			TOTAL SHEETS
2			4			13

DRAWN BY : M.J. OSTRISHKO DATE : 10/2014
CHECKED BY : N.A. PIERCE DATE : 11/2014

8/21/2017
R:\Raleigh Office NCDOT\17BP GROUP 1\17BP.14.R.91_370095\Structures\Drafting\410_010_17BP.14.R.91_SMU_CU10.dgn
usmo04281

DocuSign Envelope ID: BEA82789-CCD9-4CBA-8A50-BCA61C298DA3

BAR SCHEDULE STAGE 1

BAR	NO.	SIZE	TYPE	LENGTH	WEIGHT	BAR	NO.	SIZE	TYPE	LENGTH	WEIGHT
A1	141	#4	1	5'-10"	549	A316	2	#5	STR	7'-10"	16
A2	212	#4	1	5'-10"	826	A317	2	#5	STR	6'-10"	14
						A318	2	#5	STR	5'-10"	12
A100	46	#5	STR	15'-8"	752	A319	2	#5	STR	4'-10"	10
A101	2	#5	STR	14'-2"	30	A320	2	#5	STR	3'-10"	8
A102	2	#5	STR	12'-5"	26	A321	2	#5	STR	2'-10"	6
A103	2	#5	STR	10'-9"	22	A322	2	#5	STR	1'-10"	4
A104	2	#5	STR	9'-0"	19						
A105	2	#5	STR	7'-3"	15	A400	55	#4	STR	11'-4"	416
A106	2	#5	STR	5'-6"	11	A401	2	#4	STR	9'-10"	13
A107	2	#5	STR	3'-10"	8	A402	2	#4	STR	8'-1"	11
A108	2	#5	STR	2'-1"	4	A403	2	#4	STR	6'-4"	8
A109	2	#5	STR	14'-10"	31	A404	2	#4	STR	4'-8"	6
A110	2	#5	STR	13'-10"	29	A405	1	#4	STR	3'-10"	3
A111	2	#5	STR	12'-10"	27	A406	2	#4	STR	10'-4"	14
A112	2	#5	STR	11'-10"	25	A407	2	#4	STR	9'-4"	12
A113	2	#5	STR	10'-10"	23	A408	2	#4	STR	8'-4"	11
A114	2	#5	STR	9'-10"	21	A409	2	#4	STR	7'-4"	10
A115	2	#5	STR	8'-10"	18	A410	2	#4	STR	6'-4"	8
A116	2	#5	STR	7'-10"	16	A411	2	#4	STR	5'-4"	7
A117	2	#5	STR	6'-10"	14	A412	2	#4	STR	4'-4"	6
A118	2	#5	STR	5'-10"	12	A413	2	#4	STR	3'-4"	4
A119	2	#5	STR	4'-10"	10	A414	2	#4	STR	2'-4"	3
A120	2	#5	STR	3'-10"	8	A415	1	#4	STR	1'-10"	1
A121	2	#5	STR	2'-10"	6						
A122	2	#5	STR	1'-10"	4	A450	56	#4	STR	6'-4"	237
						A451	2	#4	STR	4'-10"	6
A200	55	#4	STR	11'-4"	416	A452	2	#4	STR	3'-1"	4
A201	2	#4	STR	9'-10"	13	A453	2	#4	STR	1'-5"	2
A202	2	#4	STR	8'-1"	11	A454	2	#4	STR	5'-9"	8
A203	2	#4	STR	6'-4"	8	A455	2	#4	STR	4'-9"	6
A204	2	#4	STR	4'-8"	6	A456	2	#4	STR	3'-9"	5
A205	1	#4	STR	3'-10"	3	A457	2	#4	STR	2'-9"	4
A206	2	#4	STR	10'-4"	14	A458	2	#4	STR	1'-9"	2
A207	2	#4	STR	9'-4"	12						
A208	2	#4	STR	8'-4"	11	B1	72	#4	STR	5'-7"	269
A209	2	#4	STR	7'-4"	10	B3	71	#4	STR	4'-4"	206
A210	2	#4	STR	6'-4"	8						
A211	2	#4	STR	5'-4"	7	C1	100	#4	STR	21'-5"	1431
A212	2	#4	STR	4'-4"	6						
A213	2	#4	STR	3'-4"	4	D1	3	#6	STR	2'-7"	12
A214	2	#4	STR	2'-4"	3	D2	12	#6	STR	2'-1"	38
A215	1	#4	STR	1'-10"	1						
						G1	4	#5	STR	18'-1"	75
A250	56	#4	STR	6'-4"	237						
A251	2	#4	STR	4'-10"	6	S1	3	#6	STR	14'-2"	64
A252	2	#4	STR	3'-1"	4	S2	6	#6	STR	16'-5"	148
A253	2	#4	STR	1'-5"	2	S3	3	#6	STR	7'-4"	33
A254	2	#4	STR	5'-9"	8	S4	6	#6	STR	9'-1"	82
A255	2	#4	STR	4'-9"	6	S5	3	#6	STR	18'-1"	81
A256	2	#4	STR	3'-9"	5	S6	6	#6	STR	22'-2"	200
A257	2	#4	STR	2'-9"	4						
A258	2	#4	STR	1'-9"	2						
A300	46	#5	STR	15'-8"	752						
A301	2	#5	STR	14'-2"	30						
A302	2	#5	STR	12'-5"	26						
A303	2	#5	STR	10'-9"	22						
A304	2	#5	STR	9'-0"	19						
A305	2	#5	STR	7'-3"	15						
A306	2	#5	STR	5'-6"	11						
A307	2	#5	STR	3'-10"	8						
A308	2	#5	STR	2'-1"	4						
A309	2	#5	STR	14'-10"	31						
A310	2	#5	STR	13'-10"	29						
A311	2	#5	STR	12'-10"	27						
A312	2	#5	STR	11'-10"	25						
A313	2	#5	STR	10'-10"	23						
A314	2	#5	STR	9'-10"	21						
A315	2	#5	STR	8'-10"	18						
						REINFORCING STEEL				LBS.	7,494

BAR SCHEDULE STAGE 2

BAR	NO.	SIZE	TYPE	LENGTH	WEIGHT	BAR	NO.	SIZE	TYPE	LENGTH	WEIGHT
A1	196	#4	1	5'-8"	742	A400	98	#4	STR	11'-4"	742
A2	341	#4	1	5'-8"	1291	A401	2	#4	STR	10'-4"	14
						A402	2	#4	STR	9'-4"	12
A100	67	#5	STR	15'-8"	1095	A403	2	#4	STR	8'-4"	11
A101	4	#5	STR	14'-10"	62	A404	2	#4	STR	7'-4"	10
A102	4	#5	STR	13'-10"	58	A405	2	#4	STR	6'-4"	8
A103	4	#5	STR	12'-10"	54	A406	2	#4	STR	5'-4"	7
A104	4	#5	STR	11'-10"	49	A407	2	#4	STR	4'-4"	6
A105	4	#5	STR	10'-10"	45	A408	2	#4	STR	3'-4"	4
A106	4	#5	STR	9'-10"	41	A409	2	#4	STR	2'-4"	3
A107	4	#5	STR	8'-10"	37	A410	2	#4	STR	1'-4"	2
A108	4	#5	STR	7'-10"	33	A411	2	#4	STR	10'-6"	14
A109	4	#5	STR	6'-10"	29	A412	2	#4	STR	9'-6"	13
A110	4	#5	STR	5'-10"	24	A413	2	#4	STR	8'-6"	11
A111	4	#5	STR	4'-10"	20	A414	2	#4	STR	7'-6"	10
A112	4	#5	STR	3'-10"	16	A415	2	#4	STR	6'-6"	9
A113	4	#5	STR	2'-10"	12	A416	2	#4	STR	5'-6"	7
A114	4	#5	STR	1'-10"	8	A417	2	#4	STR	4'-6"	6
A115	2	#5	STR	1'-4"	3	A418	2	#4	STR	4'-0"	5
						A419	2	#4	STR	3'-0"	4
A200	98	#4	STR	11'-4"	742						
A201	2	#4	STR	10'-4"	14	A450	100	#4	STR	6'-4"	423
A202	2	#4	STR	9'-4"	12	A451	2	#4	STR	5'-6"	7
A203	2	#4	STR	8'-4"	11	A452	2	#4	STR	4'-6"	6
A204	2	#4	STR	7'-4"	10	A453	2	#4	STR	3'-6"	5
A205	2	#4	STR	6'-4"	8	A454	2	#4	STR	2'-6"	3
A206	2	#4	STR	5'-4"	7	A455	2	#4	STR	1'-6"	2
A207	2	#4	STR	4'-4"	6	A456	8	#4	STR	6'-5"	34
A208	2	#4	STR	3'-4"	4	A457	2	#4	STR	5'-10"	8
A209	2	#4	STR	2'-4"	3	A458	2	#4	STR	4'-10"	6
A210	2	#4	STR	1'-4"	2	A459	2	#4	STR	4'-0"	5
A211	2	#4	STR	10'-6"	14	A460	2	#4	STR	3'-1"	4
A212	2	#4	STR	9'-6"	13	A461	2	#4	STR	2'-2"	3
A213	2	#4	STR	8'-6"	11	A462	2	#4	STR	1'-3"	2
A214	2	#4	STR	7'-6"	10						
A215	2	#4	STR	6'-6"	9	B1	98	#4	STR	5'-7"	366
A216	2	#4	STR	5'-6"	7	B3	99	#4	STR	4'-4"	287
A217	2	#4	STR	4'-6"	6						
A218	2	#4	STR	4'-0"	5	C2	57	#4	STR	21'-10"	831
A219	2	#4	STR	3'-0"	4	C3	62	#4	STR	25'-8"	1063
						C4	2	#4	STR	10'-5"	14
A250	100	#4	STR	6'-4"	423						
A251	2	#4	STR	5'-6"	7	D1	3	#6	STR	2'-7"	12
A252	2	#4	STR	4'-6"	6	D2	15	#6	STR	2'-1"	47
A253	2	#4	STR	3'-6"	5	D3	8	#6	STR	3'-0"	36
A254	2	#4	STR	2'-6"	3						
A255	2	#4	STR	1'-6"	2	G2	4	#5	STR	22'-2"	92
A256	8	#4	STR	6'-5"	34						
A257	2	#4	STR	5'-10"	8	K1	16	#5	2	3'-6"	58
A258	2	#4	STR	4'-10"	6						
A259	2	#4	STR	4'-0"	5	S6	9	#6	STR	22'-2"	300
A260	2	#4	STR	3'-1"	4	S7	11	#6	STR	16'-5"	271
A261	2	#4	STR	2'-2"	3	S8	6	#6	STR	9'-1"	82
A262	2	#4	STR	1'-3"	2	S9	5	#6	STR	10'-5"	78
A300	67	#5	STR	15'-8"	1095						
A301	4	#5	STR	14'-10"	62						
A302	4	#5	STR	13'-10"	58						
A303	4	#5	STR	12'-10"	54						
A304	4	#5	STR	11'-10"	49						
A305	4	#5	STR	10'-10"	45						
A306	4	#5	STR	9'-10"	41						
A307	4	#5	STR	8'-10"	37						
A308	4	#5	STR	7'-10"	33						
A309	4	#5	STR	6'-10"	29						
A310	4	#5	STR	5'-10"	24						
A311	4	#5	STR	4'-10"	20						
A312	4	#5	STR	3'-10"	16						
A313	4	#5	STR	2'-10"	12						
A314	4	#5	STR	1'-10"	8						
A315	2	#5	STR	1'-4"	3						
						REINFORCING STEEL				LBS.	11,476

BAR TYPE

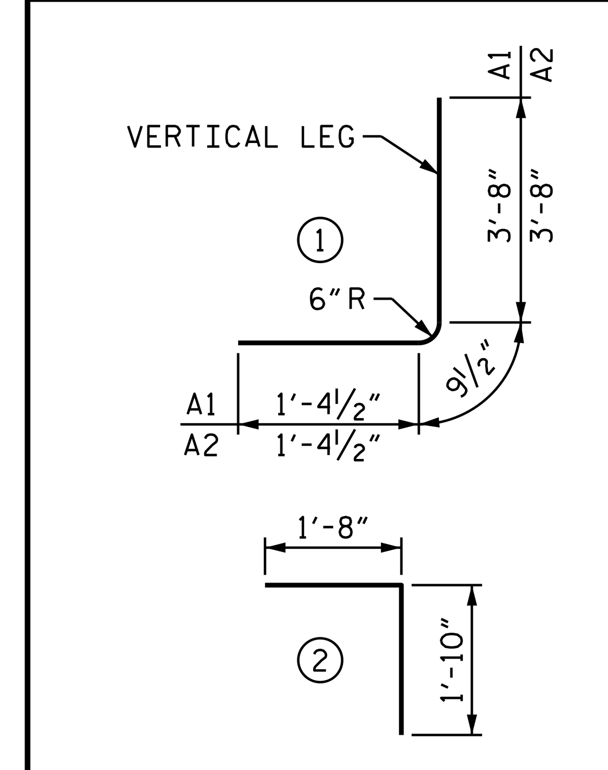

BAR DIMENSIONS ARE OUT TO OUT.

SPLICE LENGTH TABLE

BAR	SIZE	LENGTH
A	#4	1'-11"
C	#4	1'-11"
S	#6	3'-1"

STAGE 1 QUANTITIES

CLASS A CONCRETE		
BARREL @ 1.490 CY/FT	52.9	CY
WINGS, ETC.	9.4	CY
SILLS	2.1	CY
TOTAL	64.4	CY
REINFORCING STEEL		
BARREL & SILLS	7,494	LBS.
WINGS, ETC.	453	LBS.
TOTAL	7,947	LBS.
CULVERT EXCAVATION	LUMP SUM	
FOUNDATION COND. MAT'L	41	TONS

STAGE 2 QUANTITIES

CLASS A CONCRETE		
BARREL @ 1.490 CY/FT	73.7	CY
WINGS, ETC.	13.2	CY
SILLS	2.7	CY
TOTAL	89.6	CY
REINFORCING STEEL		
BARREL & SILLS	11,476	LBS.
WINGS, ETC.	373	LBS.
TOTAL	11,849	LBS.
CULVERT EXCAVATION	LUMP SUM	
FOUNDATION COND. MAT'L	70	TONS

PROJECT NO. 17BP.14.R.91
GRAHAM COUNTY
STATION: 13+27.15 -L-

STATE OF NORTH CAROLINA
DEPARTMENT OF TRANSPORTATION
RALEIGH

DOUBLE 7FT. X 4FT. CONCRETE BOX CULVERT STAGES I & II BILL OF MATERIAL

WSP

WSP USA Inc.
434 FAYETTEVILLE STREET
SUITE 1500
RALEIGH, NC 27601
TEL: 1.919.836.4040
LICENSE NO. F-0165

NORTH CAROLINA PROFESSIONAL ENGINEER SEAL NICHOLAS A. PIERCE
9/7/2017

DOCUMENT NOT CONSIDERED FINAL UNLESS ALL SIGNATURES COMPLETED

REVISIONS						SHEET NO.
NO.	BY:	DATE:	NO.	BY:	DATE:	C-11
1			3			TOTAL SHEETS
2			4			13

DRAWN BY : M.J. OSTRISHKO DATE : 10/2014
CHECKED BY : N.A. PIERCE DATE : 11/2014

8/23/2017
R:\Raleigh Office NCDOT\17BP GROUP 1\17BP.14.R.91_370095\Structures\Drafting\410_011_17BP.14.R.91_SMU_CU11.dgn
usmo04281

DocuSign Envelope ID: BEA82789-CCD9-4CBA-8A50-BCA61C298DA3

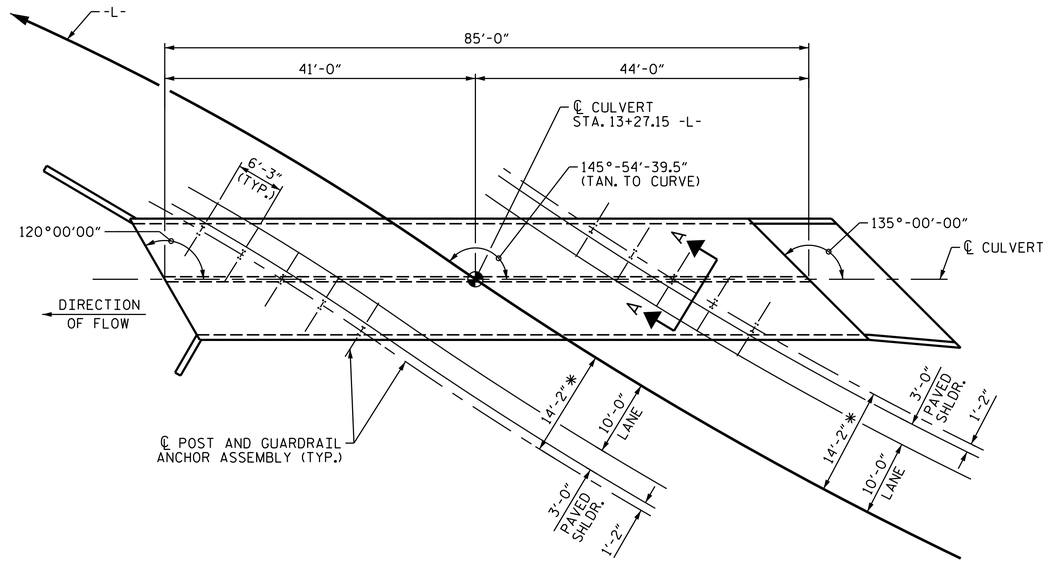

*DIMENSION TO BE VERIFIED BY THE ENGINEER

PLAN

SHOWING : GUARDRAIL ANCHOR ASSEMBLY SPACING.

NOTES

THE GUARDRAIL ANCHOR ASSEMBLY FOR CULVERTS SHALL CONSIST OF THE FOLLOWING COMPONENTS :

A. FERRULES SHALL BE MADE FROM STEEL MEETING THE REQUIREMENTS OF AASHTO M169, GRADE 12L14 AND SHALL HAVE A MINIMUM LENGTH OF THREADS OF 2½".

B. 4 - 1" Ø X 2¼" BOLTS WITH WASHERS, BOLTS SHALL CONFORM TO THE REQUIREMENTS OF ASTM A307. BOLTS AND WASHERS SHALL BE GALVANIZED. (AT THE CONTRACTOR'S OPTION, STAINLESS STEEL BOLTS AND WASHERS MAY BE USED AS AN ALTERNATE FOR THE 1" Ø X 2¼" GALVANIZED BOLTS AND WASHERS. THEY SHALL CONFORM TO OR EXCEED THE MECHANICAL REQUIREMENTS OF ASTM A307. THE USE OF THIS ALTERNATE SHALL BE APPROVED BY THE ENGINEER.)

C. WIRE STRUTS SHOWN IN THE GUARDRAIL ANCHOR ASSEMBLY FOR CULVERTS DETAIL ARE MINIMUM ALLOWABLE SIZE AND SHALL HAVE A MINIMUM TENSILE STRENGTH OF 100,000 P.S.I. AS AN OPTION, A 7/16" Ø WIRE STRUT WITH A MINIMUM TENSILE STRENGTH OF 90,000 PSI IS ACCEPTABLE.

GUARDRAIL ANCHOR ASSEMBLY WITH BOLTS SHALL BE ASSEMBLED IN THE SHOP. BOLT THREADS MAY BE RECUT AS NECESSARY TO INSURE FIT.

THE COST OF THE GUARDRAIL ANCHOR ASSEMBLY FOR CULVERTS COMPLETE IN PLACE, SHALL BE INCLUDED IN THE UNIT CONTRACT PRICE BID FOR CLASS "A" CONCRETE.

FERRULES TO BE PLUGGED DURING POURING OF SLAB AS RECOMMENDED BY THE MANUFACTURER.

AT THE CONTRACTOR'S OPTION, FERRULES WITH OPEN OR CLOSED ENDS MAY BE USED.

PAYMENT FOR GUARDRAIL, POSTS, AND POST BASE PLATES IS INCLUDED IN ROADWAY PAY ITEMS.

SLAB REINFORCING STEEL MAY BE SHIFTED AS NECESSARY TO CLEAR GUARDRAIL ANCHOR ASSEMBLY. CARE SHOULD BE TAKEN TO KEEP THE SHIFTING OF REINFORCING STEEL TO A MINIMUM.

THE CONTRACTOR MAY USE ADHESIVELY ANCHORED ANCHOR BOLTS IN PLACE OF GUARDRAIL ANCHOR ASSEMBLY. LEVEL TWO FIELD TESTING IS REQUIRED, AND THE YIELD LOAD OF THE 1"Ø BOLT IS 21.8 KIPS. FOR ADHESIVELY ANCHORED ANCHOR BOLTS OR DOWELS, SEE STANDARD SPECIFICATIONS.

FOR CULVERTS 24FT OR LESS, SEE ROADWAY STD 862.01 SHEET 11 OF 12 AS OPTIONAL GUARDRAIL PLACEMENT.

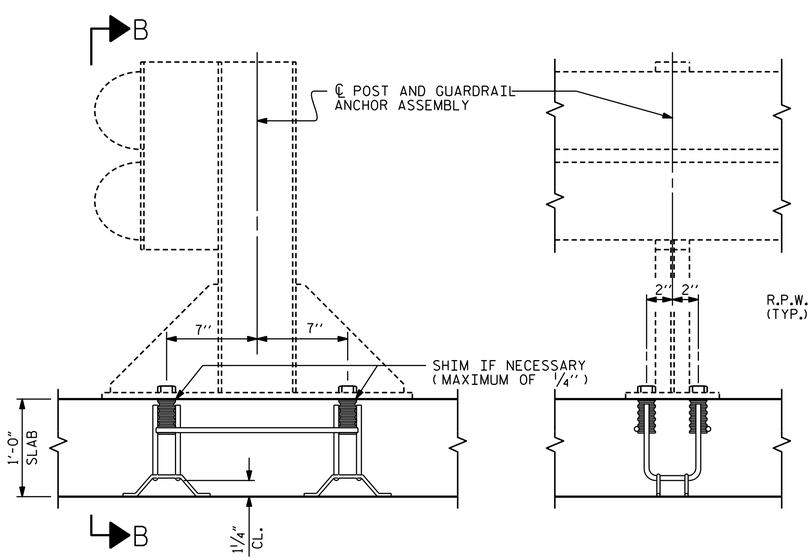

SECTION A-A

SECTION B-B

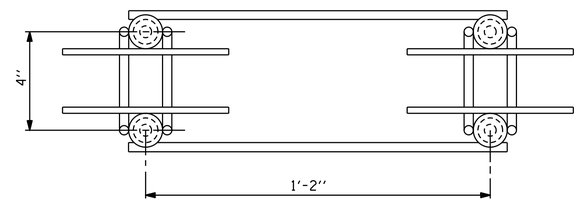

PLAN

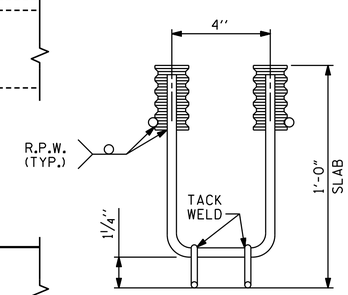

ELEVATION

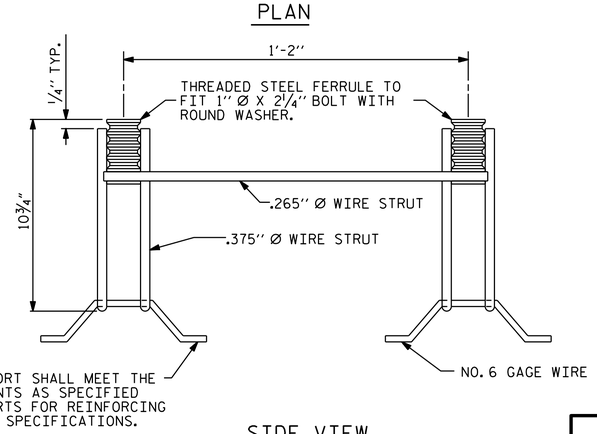

SIDE VIEW

GUARDRAIL ANCHOR ASSEMBLY FOR CULVERTS

PROJECT NO. 17BP.14.R.91

GRAHAM COUNTY

STATION: 13+27.15 -L-

STATE OF NORTH CAROLINA
DEPARTMENT OF TRANSPORTATION
RALEIGH

STANDARD

ANCHORAGE DETAILS FOR GUARDRAIL ANCHOR ASSEMBLY FOR CULVERTS

WSP USA Inc.
434 FAYETTEVILLE STREET
SUITE 1500
RALEIGH, NC 27601
TEL: 1.919.836.4040

LICENSE NO. F-0165

NORTH CAROLINA PROFESSIONAL SEAL 037479 ENGINEER NICHOLAS A. PIERCE

Nicholas Pierce
DocuSigned by:
C135B4E3D0A47C...

9/7/2017

DOCUMENT NOT CONSIDERED FINAL UNLESS ALL SIGNATURES COMPLETED

REVISIONS						SHEET NO.
NO.	BY:	DATE:	NO.	BY:	DATE:	C-12
1			3			TOTAL SHEETS
2			4			13

ASSEMBLED BY : M. HOBBS		DATE : 08/2014	
CHECKED BY : N.A. PIERCE		DATE : 11/2014	
DRAWN BY : FCJ 6/88	REV. 7/10/01	LES/RDR	
CHECKED BY : ARB 6/88	REV. 5/7/03	RWW/JTE	
	REV. 5/1/06R	KMM/GM	

8/21/2017
R:\Raleigh Office NCDOT\17BP GROUP 1\17BP.14.R.91_370095\Structures\Drafting\410_012_17BP.14.R.91_SMU_CUI2.dgn
usmo04281

STD. NO. GRA1

DocuSign Envelope ID: BEA82789-CCD9-4CBA-8A50-BCA61C298DA3

LOAD AND RESISTANCE FACTOR RATING (LRFR) SUMMARY FOR REINFORCED CONCRETE BOX CULVERTS

LEVEL		VEHICLE	WEIGHT (W) (TONS)	CONTROLLING LOAD RATING (#)	MINIMUM RATING FACTORS (RF)	TONS = W x RF	STRENGTH I LIMIT STATE									COMMENT NUMBER
							LIVE-LOAD FACTORS (γ_{LL})	MOMENT				SHEAR				
								RATING FACTOR	BOX NO.	ELEMENT TYPE	DISTANCE FROM LEFT END OF ELEMENT (ft)	RATING FACTOR	BOX NO.	ELEMENT TYPE	DISTANCE FROM LEFT END OF ELEMENT (ft)	
DESIGN LOAD RATING		HL-93 (INVENTORY)	N/A	1	1.35	--	1.75	1.53	1	BOTTOM SLAB	7.67	1.35	1	TOP SLAB	7.67	
		HL-93 (OPERATING)	N/A		1.74	--	1.35	1.99	1	BOTTOM SLAB	7.67	1.74	1	TOP SLAB	7.67	
		HS-20 (INVENTORY)	36.000	2	1.51	54.36	1.75	1.92	1	TOP SLAB	4.17	1.51	1	TOP SLAB	0.67	
		HS-20 (OPERATING)	36.000		1.95	70.20	1.35	2.49	1	TOP SLAB	4.17	1.95	1	TOP SLAB	0.67	
LEGAL LOAD RATING	SINGLE VEHICLE (SV)	SNSH	13.500		3.20	43.20	1.40	3.49	1	TOP SLAB	4.17	3.20	1	TOP SLAB	7.67	
		SNGARBS2	20.000		2.93	58.60	1.40	3.05	1	BOTTOM SLAB	7.67	2.93	1	TOP SLAB	7.67	
		SNAGRIS2	22.000		2.79	61.38	1.40	2.79	1	BOTTOM SLAB	7.67	3.20	1	TOP SLAB	7.67	
		SNCOTTS3	27.250	3	1.68	45.78	1.40	2.16	1	BOTTOM SLAB	7.67	1.68	1	TOP SLAB	7.67	
		SNAGGRS4	34.925		2.23	77.88	1.40	2.23	1	BOTTOM SLAB	7.67	2.40	1	TOP SLAB	7.67	
		SNS5A	35.550		2.07	71.52	1.40	2.07	1	BOTTOM SLAB	7.67	2.17	1	TOP SLAB	7.67	
		SNS6A	39.950		2.00	79.90	1.40	2.00	1	BOTTOM SLAB	7.67	2.12	1	TOP SLAB	7.67	
		SNS7B	42.000		2.00	84.00	1.40	2.00	1	BOTTOM SLAB	7.67	2.12	1	TOP SLAB	7.67	
	TRUCK TRACTOR SEMI-TRAILER (TTST)	TNAGRIT3	33.000		2.67	88.11	1.40	2.67	1	BOTTOM SLAB	7.67	3.21	1	TOP SLAB	7.67	
		TNT4A	33.075		2.15	71.11	1.40	2.15	1	BOTTOM SLAB	7.67	2.17	1	TOP SLAB	7.67	
		TNT6A	41.600		2.18	90.69	1.40	2.21	1	BOTTOM SLAB	7.67	2.18	1	TOP SLAB	7.67	
		TNT7A	42.000		2.18	91.56	1.40	2.18	1	BOTTOM SLAB	7.67	2.22	1	TOP SLAB	7.67	
		TNT7B	42.000		2.01	84.42	1.40	2.01	1	BOTTOM SLAB	7.67	2.11	1	TOP SLAB	7.67	
		TNAGRIT4	43.000		1.84	79.12	1.40	1.84	1	BOTTOM SLAB	7.67	2.17	1	TOP SLAB	7.67	
		TNAGT5A	45.000		1.84	82.80	1.40	1.84	1	BOTTOM SLAB	7.67	2.20	1	TOP SLAB	7.67	
		TNAGT5B	45.000		1.87	84.15	1.40	1.87	1	BOTTOM SLAB	7.67	2.17	1	TOP SLAB	7.67	

LOAD FACTORS:

DESIGN LOAD RATING FACTORS

LOAD TYPE	MAX FACTOR	MIN FACTOR
DC	1.25	0.90
DW	1.50	0.65
EV	1.30	0.90
EH	1.35	0.90
ES	1.35	0.90
LS	1.75	--
WA	1.00	--

NOTE:

RATING FACTORS ARE BASED ON THE STRENGTH I LIMIT STATE.

COMMENTS:

1.
2.
3.
4.

(#) CONTROLLING LOAD RATING

(1) DESIGN LOAD RATING (HL-93)

(2) DESIGN LOAD RATING (HS-20)

(3) LEGAL LOAD RATING **

** SEE CHART FOR VEHICLE TYPE

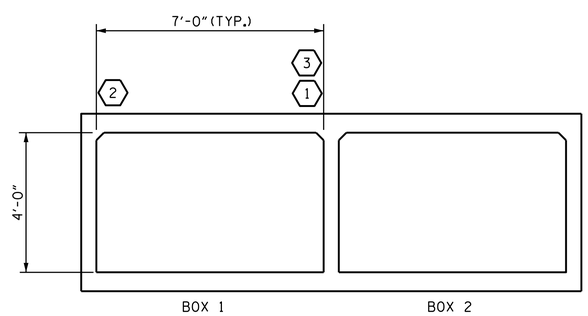

LRFR SUMMARY

(LOOKING DOWNSTREAM)

PROJECT NO. 17BP.14.R.91

GRAHAM COUNTY

STATION: 13+27.15 -L-

STATE OF NORTH CAROLINA
DEPARTMENT OF TRANSPORTATION
RALEIGH

STANDARD

LRFR SUMMARY FOR REINFORCED CONCRETE BOX CULVERTS
(NON-INTERSTATE TRAFFIC)

WSP USA Inc.
434 FAYETTEVILLE STREET
SUITE 1500
RALEIGH, NC 27601
TEL: 1.919.836.4040
LICENSE NO. F-0165

NORTH CAROLINA PROFESSIONAL SEAL 037419 ENGINEER NICHOLAS A. PIERCE

Nicholas Pierce
DocuSigned by:
C135B8B8B9B47C...

9/7/2017

DOCUMENT NOT CONSIDERED FINAL UNLESS ALL SIGNATURES COMPLETED

REVISIONS						SHEET NO.
NO.	BY:	DATE:	NO.	BY:	DATE:	
1			3			TOTAL SHEETS 13
2			4			

ASSEMBLED BY :	C. HOWARD	DATE :	10/2014
CHECKED BY :	N.A. PIERCE	DATE :	11/2014
DRAWN BY : WMC	7/11	REV. 10/1/11	MAA/GM
CHECKED BY : GM	7/11		

STD. NO. LRFR5

DocuSign Envelope ID: BEA82789-CCD9-4CBA-8A50-BCA61C298DA3

STANDARD NOTES

DESIGN DATA:

SPECIFICATIONS	A.A.S.H.T.O. (CURRENT)
LIVE LOAD	SEE PLANS
IMPACT ALLOWANCE	SEE A.A.S.H.T.O.
STRESS IN EXTREME FIBER OF	
STRUCTURAL STEEL - AASHTO M270 GRADE 36	20,000 LBS. PER SQ. IN.
- AASHTO M270 GRADE 50W	27,000 LBS. PER SQ. IN.
- AASHTO M270 GRADE 50	27,000 LBS. PER SQ. IN.
REINFORCING STEEL IN TENSION	
GRADE 60	24,000 LBS. PER SQ. IN.
CONCRETE IN COMPRESSION	1,200 LBS. PER SQ. IN.
CONCRETE IN SHEAR	SEE A.A.S.H.T.O.
STRUCTURAL TIMBER - TREATED OR	
UNTREATED - EXTREME FIBER STRESS	1,800 LBS. PER SQ. IN.
COMPRESSION PERPENDICULAR TO GRAIN OF TIMBER	375 LBS. PER SQ. IN.
EQUIVALENT FLUID PRESSURE OF EARTH	30 LBS. PER CU. FT. (MINIMUM)

MATERIAL AND WORKMANSHIP:

EXCEPT AS MAY OTHERWISE BE SPECIFIED ON PLANS OR IN THE SPECIAL PROVISIONS, ALL MATERIAL AND WORKMANSHIP SHALL BE IN ACCORDANCE WITH THE 2012 "STANDARD SPECIFICATIONS FOR ROADS AND STRUCTURES" OF THE N. C. DEPARTMENT OF TRANSPORTATION.

STEEL SHEET PILING FOR PERMANENT OR TEMPORARY APPLICATIONS SHALL BE HOT ROLLED.

CONCRETE:

UNLESS OTHERWISE REQUIRED ON PLANS, CLASS A CONCRETE SHALL BE USED FOR ALL PORTIONS OF ALL STRUCTURES WITH THE EXCEPTION THAT: CLASS AA CONCRETE SHALL BE USED IN BRIDGE SUPERSTRUCTURES, ABUTMENT BACKWALLS, AND APPROACH SLABS; AND CLASS B CONCRETE SHALL BE USED FOR SLOPE PROTECTION AND RIP RAP.

CONCRETE CHAMFERS:

UNLESS OTHERWISE NOTED ON THE PLANS, ALL EXPOSED CORNERS ON STRUCTURES SHALL BE CHAMFERED 3/4" WITH THE FOLLOWING EXCEPTIONS: TOP CORNERS OF CURBS MAY BE ROUNDED TO 1-1/2" RADIUS WHICH IS BUILT INTO CURB FORMS; CORNERS OF TRANSVERSE FLOOR EXPANSION JOINTS SHALL BE ROUNDED WITH A 1/4" FINISHING TOOL UNLESS OTHERWISE REQUIRED ON PLANS; AND CORNERS OF EXPANSION JOINTS IN THE ROADWAY FACES AND TOPS OF CURBS AND SIDEWALKS SHALL BE ROUNDED TO A 1/4" RADIUS WITH A FINISHING STONE OR TOOL UNLESS OTHERWISE REQUIRED ON PLANS.

DOWELS:

DOWELS WHEN INDICATED ON PLANS AS FOR CULVERT EXTENSIONS, SHALL BE EMBEDDED AT LEAST 12" INTO THE OLD CONCRETE AND GROUTED INTO PLACE WITH 1:2 CEMENT MORTAR.

ALLOWANCE FOR DEAD LOAD DEFLECTION, SETTLEMENT, ETC. IN CASTING SUPERSTRUCTURES:

BRIDGES SHALL BE BUILT ON THE GRADE OR VERTICAL CURVE SHOWN ON PLANS. SLABS, CURBS AND PARAPETS SHALL CONFORM TO THE GRADE OR CURVE.

ALL DIMENSIONS WHICH ARE GIVEN IN SECTION AND ARE AFFECTED BY DEAD LOAD DEFLECTIONS ARE DIMENSIONS AT CENTER LINE OF BEARING UNLESS OTHERWISE NOTED ON PLANS. IN SETTING FORMS FOR STEEL BEAM BRIDGES AND PRESTRESSED CONCRETE GIRDER BRIDGES, ADJUSTMENTS SHALL BE MADE DUE TO THE DEAD LOAD DEFLECTIONS FOR THE ELEVATIONS SHOWN. WHERE BLOCKS ARE SHOWN OVER BEAMS FOR BUILDING UP TO THE SLAB, THE VERTICAL DIMENSIONS OF THE BLOCKS SHALL BE ADJUSTED BETWEEN BEARINGS TO COMPENSATE FOR DEAD LOAD DEFLECTIONS, VERTICAL CURVE ORDINATE, AND ACTUAL BEAM CAMBER. WHERE BOTTOM OF SLAB IS IN LINE WITH BOTTOM OF TOP FLANGES, DEPTH OF SLAB BETWEEN BEARINGS SHALL BE ADJUSTED TO COMPENSATE FOR DEAD LOAD DEFLECTION, VERTICAL CURVE ORDINATE, AND ACTUAL BEAM CAMBER.

IN SETTING FALSEWORK AND FORMS FOR REINFORCED CONCRETE SPANS, AN ALLOWANCE SHALL BE MADE FOR DEAD LOAD DEFLECTIONS, SETTLEMENT OF FALSEWORK, AND PERMANENT CAMBER WHICH SHALL BE PROVIDED FOR IN ADDITION TO THE ELEVATIONS SHOWN. AFTER REMOVAL OF THE FALSEWORK, THE FINISHED STRUCTURES SHALL CONFORM TO THE PROFILE AND ELEVATIONS SHOWN ON THE PLANS AND CONSTRUCTION ELEVATIONS FURNISHED BY THE ENGINEER.

DETAILED DRAWINGS FOR FALSEWORK OR FORMS FOR BRIDGE SUPERSTRUCTURE AND ANY STRUCTURE OR PARTS OF A STRUCTURE AS NOTED ON THE PLANS SHALL BE SUBMITTED TO THE ENGINEER FOR APPROVAL BEFORE CONSTRUCTION OF THE FALSEWORK OR FORMS IS STARTED.

REINFORCING STEEL:

ALL REINFORCING STEEL SHALL BE DEFORMED. DIMENSIONS RELATIVE TO PLACEMENT OF REINFORCING ARE TO CENTERS OF BARS UNLESS OTHERWISE INDICATED IN THE PLANS. DIMENSIONS ON BAR DETAILS ARE TO CENTERS OF BARS OR ARE OUT TO OUT AS INDICATED ON PLANS.

WIRE BAR SUPPORTS SHALL BE PROVIDED FOR REINFORCING STEEL WHERE INDICATED ON THE PLANS. WHEN BAR SUPPORT PIECES ARE PLACED IN CONTINUOUS LINES, THEY SHALL BE SO PLACED THAT THE ENDS OF THE SUPPORTING WIRES SHALL BE LAPPED TO LOCK LEGS ON ADJOINING PIECES.

STRUCTURAL STEEL:

AT THE CONTRACTOR'S OPTION, HE MAY SUBSTITUTE 7/8" Ø SHEAR STUDS FOR THE ¾" Ø STUDS SPECIFIED ON THE PLANS. THIS SUBSTITUTION SHALL BE MADE AT THE RATE OF 3 - 7/8" Ø STUDS FOR 4 - 3/4" Ø STUDS, AND STUD SPACING CHANGES SHALL BE MADE AS NECESSARY TO PROVIDE THE SAME EQUIVALENT NUMBER OF 7/8" Ø STUDS ALONG THE BEAM AS SHOWN FOR 3/4" Ø STUDS BASED ON THE RATIO OF 3 - 7/8" Ø STUDS FOR 4 - 3/4" Ø STUDS. STUDS OF THE LENGTH SPECIFIED ON THE PLANS MUST BE PROVIDED. THE MAXIMUM SPACING SHALL BE 2'-0".

EXCEPT AT THE INTERIOR SUPPORTS OF CONTINUOUS BEAMS WHERE THE COVER PLATE IS IN CONTACT WITH BEARING PLATE, THE CONTRACTOR MAY, AT HIS OPTION, SUBSTITUTE FOR THE COVER PLATES DESIGNATED ON THE PLANS COVER PLATES OF THE EQUIVALENT AREA PROVIDED THESE PLATES ARE AT LEAST 5/16" IN THICKNESS AND DO NOT EXCEED A WIDTH EQUAL TO THE FLANGE WIDTH LESS 2" OR A THICKNESS EQUAL TO 2 TIMES THE FLANGE THICKNESS. THE SIZE OF FILLET WELDS SHALL CONFORM TO THE REQUIREMENTS OF THE CURRENT ANSI/AASHTO/AWS "BRIDGE WELDING CODE". ELECTROSLAG WELDING WILL NOT BE PERMITTED.

WITH THE SOLE EXCEPTION OF EDGES AT SURFACES WHICH BEAR ON OTHER SURFACES, ALL SHARP EDGES AND ENDS OF SHAPES AND PLATES SHALL BE SLIGHTLY ROUNDED BY SUITABLE MEANS TO A RADIUS OF APPROXIMATELY 1/16 INCH OR EQUIVALENT FLAT SURFACE AT A SUITABLE ANGLE PRIOR TO PAINTING, GALVANIZING, OR METALLIZING.

HANDRAILS AND POSTS:

METAL STANDARDS AND FACES OF THE CONCRETE END POSTS FOR THE METAL RAIL SHALL BE SET NORMAL TO THE GRADE OF THE CURB, UNLESS OTHERWISE SHOWN ON PLANS. THE METAL RAIL AND TOPS OF CONCRETE POSTS USED WITH THE ALUMINUM RAIL SHALL BE BUILT PARALLEL TO THE GRADE OF THE CURB.

METAL HANDRAILS SHALL BE IN ACCORDANCE WITH THE PLANS. RAILS SHALL BE AS MANUFACTURED FOR BRIDGE RAILING. CASTINGS SHALL BE OF A UNIFORM APPEARANCE. FINS AND OTHER DEFORMATIONS RESULTING FROM CASTING OR OTHERWISE SHALL BE REMOVED IN A MANNER SO THAT A UNIFORM COLORING OF THE COMPLETED CASTING SHALL BE OBTAINED. CASTINGS WITH DISCOLORATIONS OR OF NON-UNIFORM COLORING WILL NOT BE ACCEPTED. CERTIFIED MILL REPORTS ARE REQUIRED FOR METAL RAILS AND POSTS.

SPECIAL NOTES:

GENERALLY, IN CASE OF DISCREPANCY, THIS STANDARD SHEET OF NOTES SHALL GOVERN OVER THE SPECIFICATIONS, BUT THE REMAINDER OF THE PLANS SHALL GOVERN OVER NOTES HEREON, AND SPECIAL PROVISIONS SHALL GOVERN OVER ALL. SEE SPECIFICATIONS ARTICLE 105-4.

ENGLISH

JANUARY, 1990