This electronic collection of documents is provided for the convenience of the user and is Not a Certified Document –

The documents contained herein were originally issued and sealed by the individuals whose names and license numbers appear on each page, on the dates appearing with their signature on that page.
This file or an individual page shall not be considered a certified document.

DocuSign Envelope ID: 257081C6-D7AB-42C3-BF12-1EC0214A56A1

CONTRACT:DN00124/DN00125PROJECT:14SP.20221.1/14SP.20221.2

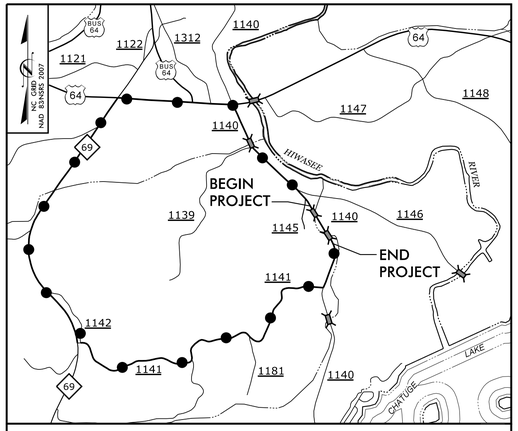

VICINITY MAP

DETOUR ROUTE

STATE OF NORTH CAROLINA
DIVISION OF HIGHWAYS

CLAY COUNTY

DOCUMENT NOT CONSIDERED FINAL UNLESS ALL SIGNATURES COMPLETED

STATE	STATE PROJECT REFERENCE NO.	SHEET NO.	TOTAL SHEETS
N.C.	14SP.20221.1/14SP.20221.2	1	

STATE PROJ. NO.	F. A. PROJ. NO.	DESCRIPTION
14SP.20221.1		P.E.
14SP.20221.1		R/W & UTIL.
14SP.20221.1		CONST.
14SP.20221.2		P.E.
14SP.20221.2		R/W & UTIL.
14SP.20221.2		CONST.

LOCATION: BRIDGE NO. 86 & NO. 87 OVER HYATT MILL CREEK ON SR 1140 (MYERS CHAPEL ROAD)

TYPE OF WORK: GRADING, DRAINAGE, PAVING, RETAINING WALL, AND CULVERTS

V&M
Vaughn & Melton
Consulting Engineers
Asheville, North Carolina
828-253-2796
Tri-Cities, TN 423-467-8401
Knoxville, TN 865-546-5800
Spartanburg, SC 864-574-4775
Charleston, SC 843-974-5650
Middlesboro, KY 606-248-6600
Charlotte, NC 704-357-0488
Boone, NC 828-355-9933
Atlanta, GA 770-627-3509
Copyright © 2006 Vaughn & Melton, Inc. All Rights Reserved

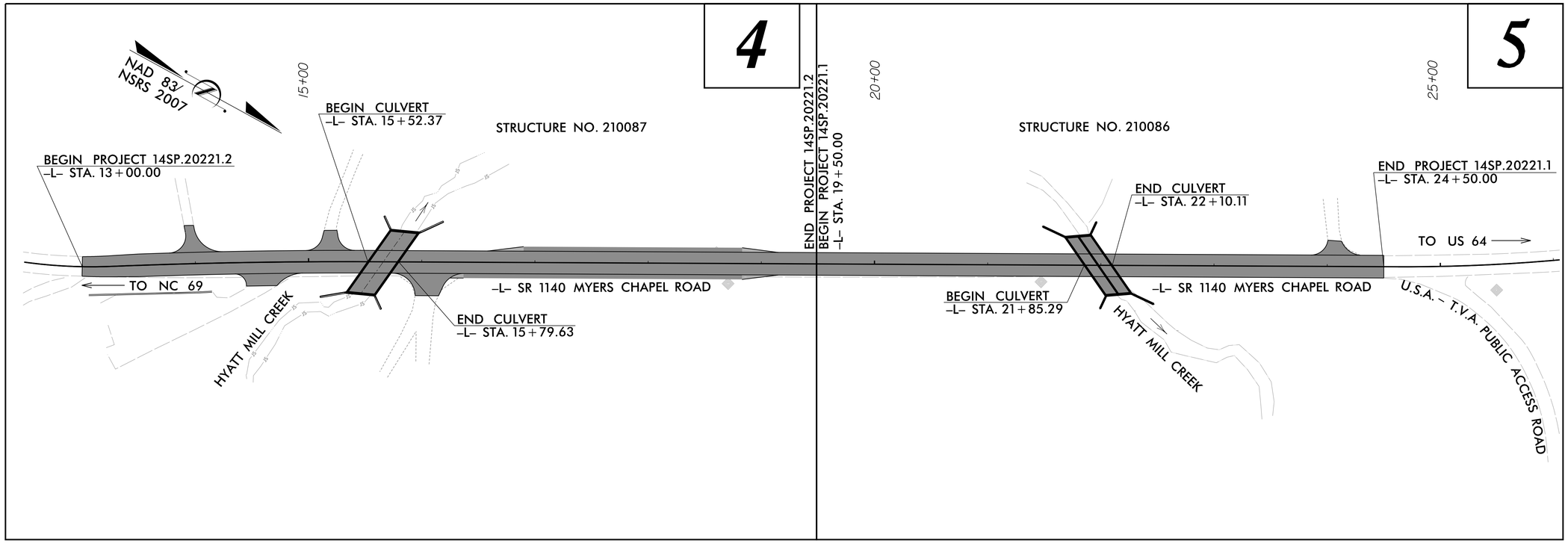

GRAPHIC SCALES

30 15 0 30 60
PLANS

30 15 0 30 60
PROFILE (HORIZONTAL)

6 3 0 6 12
PROFILE (VERTICAL)

DESIGN DATA

ADT 2010 = 690
ADT 2025 = 1100

T = 6 %
V = 50 MPH

FUNC CLASS =
MINOR COLLECTOR

SUBREGIONAL TIER

PROJECT LENGTH

LENGTH ROADWAY PROJECT 14SP.20221.1/14SP.20221.2 = 0.208 MI.

LENGTH STRUCTURE PROJECT 14SP.20221.1 = 0.005 MI.

LENGTH STRUCTURE PROJECT 14SP.20221.2 = 0.005 MI.

TOTAL LENGTH PROJECT 14SP.20221.1/14SP.20221.2 = 0.218 MI.

Prepared in the Office of:
VAUGHN & MELTON
1318-F PATTON AVE.
ASHEVILLE NC, 28806
FOR THE NORTH CAROLINA DIVISION OF HIGHWAYS

2012 STANDARD SPECIFICATIONS

RIGHT OF WAY DATE:
DECEMBER 16, 2013

LETTING DATE:

REECE SCHULER, PE
PROJECT ENGINEER

CHASE CARVER, PE
PROJECT DESIGN ENGINEER

NCDOT CONTACT:
JOSH DEYTON, PE
DIVISION 14
BRIDGE MANAGEMENT ENGINEER

HYDRAULICS ENGINEER

DocuSigned by: Paul Fisher
E3434BA5B999A4FE...
SIGNATURE: P.E. 11/1/2016

NORTH CAROLINA PROFESSIONAL SEAL 12575 ENGINEER PAUL FISHER

ROADWAY DESIGN ENGINEER

DocuSigned by: Reece M. Schuler
16634024C7824FC...
SIGNATURE: P.E. 11/1/2016

NORTH CAROLINA PROFESSIONAL SEAL 26960 ENGINEER REECE M. SCHULER

DIVISION OF HIGHWAYS
STATE OF NORTH CAROLINA

STATE OF NORTH CAROLINA DEPARTMENT OF TRANSPORTATION

11/1/2016
S:\transportation\3i236-01MTC 14SP.2022ii Clay 86\Roadway\Proj\BD5ii4_086_Rdy_tsh.dgn
User:cjmartell

06/08/11

DocuSign Envelope ID: 08E064B3-59BD-417B-A48A-8C7EFC6A2DA2

DOCUMENT NOT CONSIDERED FINAL UNLESS ALL SIGNATURES COMPLETED

PROJECT REFERENCE NO.	SHEET NO.
14SP.20221.1/14SP.20221.2	1A

ROADWAY DESIGN ENGINEER

NORTH CAROLINA PROFESSIONAL SEAL 26960 ENGINEER

DocuSigned by: Brian McCarthy

11/4/2016

INDEX OF SHEETS

SHEET NUMBER	SHEET
1	TITLE SHEET
1A	INDEX OF SHEETS, GENERAL NOTES, AND LIST OF STANDARD DRAWINGS
1B	CONVENTIONAL SYMBOLS
1C-1	SURVEY CONTROL SHEET
2A-1	PAVEMENT SCHEDULE, TYPICAL SECTIONS, AND WEDGING DETAILS
3B-1	SUMMARY OF EARTHWORK, SUMMARY OF GUARDRAIL, AND ASPHALT PAVEMENT REMOVAL SUMMARY
3D-1	DRAINAGE SUMMARY
4 THRU 5	PLAN AND PROFILE SHEET
TMP-1 THRU TMP-3	TRAFFIC MANAGEMENT PLANS
PMP-1	PAVEMENT MARKING PLAN
EC-1 THRU EC-6	EROSION CONTROL PLANS
UO-1 THRU UO-2	UTILITIES BY OTHERS PLANS
X-1A	CROSS-SECTION SUMMARY
X-1 THRU X-10	CROSS-SECTIONS
C-1 THRU C-10	STRUCTURE PLANS (14SP.20221.2)
C-11 THRU C-19	STRUCTURE PLANS (14SP.20221.1)
W-1 THRU W-2	WALL PLANS (14SP.20221.2)

GENERAL NOTES:

2012 SPECIFICATIONS
EFFECTIVE: 01-17-12

GRADE LINE:
GRADING AND SURFACING OR RESURFACING AND WIDENING:

THE GRADE LINES SHOWN DENOTE THE FINISHED ELEVATION OF THE PROPOSED SURFACING AT GRADE POINTS SHOWN ON THE TYPICAL SECTIONS. WHERE NO GRADE LINES ARE SHOWN, THE PROFILES SHOWN DENOTE THE TOP ELEVATION OF THE EXISTING PAVEMENT ALONG THE CENTER LINE OF SURVEY ON WHICH THE PROPOSED RESURFACING WILL BE PLACED. GRADE LINES MAY BE ADJUSTED BY THE ENGINEER IN ORDER TO SECURE A PROPER TIE-IN.

CLEARING:

CLEARING ON THIS PROJECT SHALL BE PERFORMED TO THE LIMITS ESTABLISHED BY METHOD II.

SUPERELEVATION:

ALL CURVES ON THIS PROJECT SHALL BE SUPERELEVATED IN ACCORDANCE WITH STD. NO. 225.04 USING THE RATE OF SUPERELEVATION AND RUNOFF SHOWN ON THE PLANS. SUPERELEVATION IS TO BE REVOLVED ABOUT THE GRADE POINTS SHOWN ON THE TYPICAL SECTIONS.

SHOULDER CONSTRUCTION:

ASPHALT, EARTH, AND CONCRETE SHOULDER CONSTRUCTION ON THE HIGH SIDE OF SUPERELEVATED CURVES SHALL BE IN ACCORDANCE WITH STD. NO. 560.01.

UNDERDRAINS:

UNDERDRAINS SHALL BE CONSTRUCTED IN ACCORDANCE WITH STD. NO. 815.03 AT LOCATIONS DIRECTED BY THE ENGINEER.

GUARDRAIL:

THE GUARDRAIL LOCATIONS SHOWN ON THE PLANS MAY BE ADJUSTED DURING CONSTRUCTION AS DIRECTED BY THE ENGINEER. THE CONTRACTOR SHOULD CONSULT WITH THE ENGINEER PRIOR TO ORDERING GUARDRAIL MATERIAL.

TEMPORARY SHORING:

SHORING REQUIRED FOR THE MAINTENANCE OF TRAFFIC WILL BE PAID FOR AS "EXTRA WORK" IN ACCORDANCE WITH SECTION 104-7.

UTILITIES:

UTILITY OWNERS ON THIS PROJECT ARE: FRONTIER COMMUNICATIONS (TELEPHONE), BLUE RIDGE MOUNTAIN EMC (POWER), AND BALSAMWEST FIBERNET (FIBER OPTIC).

RIGHT-OF-WAY MARKERS:

ALL RIGHT-OF-WAY MARKERS ON THIS PROJECT SHALL BE PLACED BY CONTRACT IN ACCORDANCE WITH SECTION 801 OF THE 2012 NORTH CAROLINA STANDARD SPECIFICATIONS FOR ROADS AND STRUCTURES.

2012 ROADWAY ENGLISH STANDARD DRAWINGS

The following Roadway Standards as appear in "Roadway Standard Drawings" Highway Design Branch - N. C. Department of Transportation - Raleigh, N. C., Dated January 17, 2012 are applicable to this project and by reference hereby are considered a part of these plans:

STD.NO.	TITLE
DIVISION 2 - EARTHWORK	
200.02	Method of Clearing - Method II
225.02	Guide for Grading Subgrade - Secondary and Local
225.04	Method of Obtaining Superelevation - Two Lane Pavement
DIVISION 3 - PIPE CULVERTS	
300.01	Method of Pipe Installation - Method 'A'
310.02	Parallel Pipe End Section
310.04	Parallel Pipe End Section
DIVISION 5 - SUBGRADE, BASES AND SHOULDERS	
560.01	Method of Shoulder Construction - High Side of Superelevated Curve - Method I
DIVISION 8 - INCIDENTALS	
840.25	Anchorage for Frames
840.29	Frames and Narrow Slot Flat Grate
840.35	Traffic Bearing Grated Drop Inlet - For Cast Iron Double Frame and Grates
840.71	Concrete and Brick Pipe Plug
846.01	Concrete Curb, Gutter, and Curb & Gutter
846.04	Drop Inlet Installation in Shoulder Berm Gutter
862.01	Guardrail Placement
862.02	Guardrail Installation
876.02	Guide for Rip Rap at Pipe Outlets

11/4/2016
S:\Transportation\31236-01 MTC 14SP.20221.1 Clay 86\Roadway\Proj\bd5114.086_087_rdy_sum_1a.dgn
jlsero mpatel

04/06/15

PROJECT REFERENCE NO.	SHEET NO.
14SP.2022IJ/14SP.2022I.2	1B

STATE OF NORTH CAROLINA, DIVISION OF HIGHWAYS

CONVENTIONAL PLAN SHEET SYMBOLS

Note: Not to Scale **S.U.E. = Subsurface Utility Engineering*

BOUNDARIES AND PROPERTY:

- State Line
- County Line
- Township Line
- City Line
- Reservation Line
- Property Line
- Existing Iron Pin — EIP
- Property Corner
- Property Monument — ECM
- Parcel/Sequence Number — 123
- Existing Fence Line
- Proposed Woven Wire Fence
- Proposed Chain Link Fence
- Proposed Barbed Wire Fence
- Existing Wetland Boundary — WLB
- Proposed Wetland Boundary — WLB
- Existing Endangered Animal Boundary — EAB
- Existing Endangered Plant Boundary — EPB
- Existing Historic Property Boundary — HPB
- Known Contamination Area: Soil
- Potential Contamination Area: Soil
- Known Contamination Area: Water
- Potential Contamination Area: Water
- Contaminated Site: Known or Potential

BUILDINGS AND OTHER CULTURE:

- Gas Pump Vent or U/G Tank Cap
- Sign — S
- Well — W
- Small Mine
- Foundation
- Area Outline
- Cemetery
- Building
- School
- Church
- Dam

HYDROLOGY:

- Stream or Body of Water
- Hydro, Pool or Reservoir
- Jurisdictional Stream — JS
- Buffer Zone 1 — BZ 1
- Buffer Zone 2 — BZ 2
- Flow Arrow
- Disappearing Stream
- Spring
- Wetland
- Proposed Lateral, Tail, Head Ditch — FLOW
- False Sump

RAILROADS:

- Standard Gauge — CSX TRANSPORTATION
- RR Signal Milepost — MILEPOST 35
- Switch — SWITCH
- RR Abandoned
- RR Dismantled

RIGHT OF WAY:

- Baseline Control Point
- Existing Right of Way Marker
- Existing Right of Way Line
- Proposed Right of Way Line — RW
- Proposed Right of Way Line with Iron Pin and Cap Marker — RW
- Proposed Right of Way Line with Concrete or Granite R/W Marker — RW
- Proposed Control of Access Line with Concrete C/A Marker — CA
- Existing Control of Access — CA
- Proposed Control of Access — CA
- Existing Easement Line — E
- Proposed Temporary Construction Easement — E
- Proposed Temporary Drainage Easement — TDE
- Proposed Permanent Drainage Easement — PDE
- Proposed Permanent Drainage / Utility Easement — DUE
- Proposed Permanent Utility Easement — PUE
- Proposed Temporary Utility Easement — TUE
- Proposed Aerial Utility Easement — AUE
- Proposed Permanent Easement with Iron Pin and Cap Marker

ROADS AND RELATED FEATURES:

- Existing Edge of Pavement
- Existing Curb
- Proposed Slope Stakes Cut — C
- Proposed Slope Stakes Fill — F
- Proposed Curb Ramp — CR
- Existing Metal Guardrail
- Proposed Guardrail
- Existing Cable Guiderail
- Proposed Cable Guiderail
- Equality Symbol
- Pavement Removal

VEGETATION:

- Single Tree
- Single Shrub
- Hedge
- Woods Line
- Orchard
- Vineyard — Vineyard

EXISTING STRUCTURES:

MAJOR:

- Bridge, Tunnel or Box Culvert — CONC
- Bridge Wing Wall, Head Wall and End Wall — CONC WW

MINOR:

- Head and End Wall — CONC HW
- Pipe Culvert
- Footbridge
- Drainage Box: Catch Basin, DI or JB — CB
- Paved Ditch Gutter
- Storm Sewer Manhole — S
- Storm Sewer — S

UTILITIES:

POWER:

- Existing Power Pole
- Proposed Power Pole
- Existing Joint Use Pole
- Proposed Joint Use Pole
- Power Manhole — P
- Power Line Tower
- Power Transformer
- U/G Power Cable Hand Hole
- H-Frame Pole
- U/G Power Line LOS B (S.U.E.*) — P
- U/G Power Line LOS C (S.U.E.*) — P
- U/G Power Line LOS D (S.U.E.*) — P

TELEPHONE:

- Existing Telephone Pole
- Proposed Telephone Pole
- Telephone Manhole — T
- Telephone Pedestal — T
- Telephone Cell Tower
- U/G Telephone Cable Hand Hole
- U/G Telephone Cable LOS B (S.U.E.*) — T
- U/G Telephone Cable LOS C (S.U.E.*) — T
- U/G Telephone Cable LOS D (S.U.E.*) — T
- U/G Telephone Conduit LOS B (S.U.E.*) — TC
- U/G Telephone Conduit LOS C (S.U.E.*) — TC
- U/G Telephone Conduit LOS D (S.U.E.*) — TC
- U/G Fiber Optics Cable LOS B (S.U.E.*) — T FO
- U/G Fiber Optics Cable LOS C (S.U.E.*) — T FO
- U/G Fiber Optics Cable LOS D (S.U.E.*) — T FO

WATER:

- Water Manhole — W
- Water Meter
- Water Valve
- Water Hydrant
- U/G Water Line LOS B (S.U.E*) — W
- U/G Water Line LOS C (S.U.E*) — W
- U/G Water Line LOS D (S.U.E*) — W
- Above Ground Water Line — A/G Water

TV:

- TV Pedestal — C
- TV Tower
- U/G TV Cable Hand Hole — HH
- U/G TV Cable LOS B (S.U.E.*) — TV
- U/G TV Cable LOS C (S.U.E.*) — TV
- U/G TV Cable LOS D (S.U.E.*) — TV
- U/G Fiber Optic Cable LOS B (S.U.E.*) — TV FO
- U/G Fiber Optic Cable LOS C (S.U.E.*) — TV FO
- U/G Fiber Optic Cable LOS D (S.U.E.*) — TV FO

GAS:

- Gas Valve
- Gas Meter
- U/G Gas Line LOS B (S.U.E.*) — G
- U/G Gas Line LOS C (S.U.E.*) — G
- U/G Gas Line LOS D (S.U.E.*) — G
- Above Ground Gas Line — A/G Gas

SANITARY SEWER:

- Sanitary Sewer Manhole
- Sanitary Sewer Cleanout
- U/G Sanitary Sewer Line — SS
- Above Ground Sanitary Sewer — A/G Sanitary Sewer
- SS Forced Main Line LOS B (S.U.E.*) — FSS
- SS Forced Main Line LOS C (S.U.E.*) — FSS
- SS Forced Main Line LOS D (S.U.E.*) — FSS

MISCELLANEOUS:

- Utility Pole
- Utility Pole with Base
- Utility Located Object
- Utility Traffic Signal Box — S
- Utility Unknown U/G Line LOS B (S.U.E.*) — ?UTL
- U/G Tank; Water, Gas, Oil
- Underground Storage Tank, Approx. Loc. — UST
- A/G Tank; Water, Gas, Oil
- Geoenvironmental Boring
- U/G Test Hole LOS A (S.U.E.*)
- Abandoned According to Utility Records — AATUR
- End of Information — E.O.I.

PROJECT REFERENCE NO.	SHEET NO.
21-0086 /21-0087	1C-1
Location and Surveys	

SURVEY CONTROL SHEET 21-0086/87
-FINAL-

210086

POINT	DESC.	NORTH	EAST	ELEVATION	L STATION	OFFSET
1	BL1	499253.9723	562928.9087	1813.48	18+70.72	17.76 RT
2	BL2	499489.8240	562784.0822	1806.29	21+47.48	15.04 RT
3	BL3	499837.3722	562581.3499	1823.38	25+48.55	22.70 RT

210087

POINT	DESC.	NORTH	EAST	ELEVATION	L STATION	OFFSET
4	BL4	498711.9420	563251.1370	1831.12	12+41.93	14.19 RT
5	BL5	498963.7180	563076.0710	1818.90	15+46.14	5.54 LT
6	BL6	499230.8770	562910.5750	1813.09	18+60.36	9.85 LT

BM1 ELEVATION = 1810.75
N 499339 E 562891
L STATION 19+63.00 29 RIGHT
8" SPIKE SET IN ROOT OF A 20" SYCAMORE TREE

BM2 ELEVATION = 1817.66
N 499757 E 562582
L STATION 24+81.00 20 LEFT
8" SPIKE SET IN ROOT OF A 18" PINE TREE

BM3 ELEVATION = 1829.78
N 498719 E 563253
L STATION 12+48.00 19 RIGHT
8" SPIKE SET IN THE ROOT OF A 18" DOUBLE LOCUST TREE

BM4 ELEVATION = 1817.26
N 499083 E 562943
L STATION 17+16.00 58 LEFT
8" SPIKE SET IN THE BASE OF A 18" WALNUT TREE

NAD 83/NC GRID NSRS 2007

PDE

-FINAL- ROW MARKER PERMANENT EASEMENT-E

ALIGN	STATION	OFFSET	NORTH	EAST
L	15+40.00	-40.00	498940.6330	563049.7543
L	15+40.00	-60.00	498930.2872	563032.6381
L	16+24.99	-60.00	499003.2792	562988.7808
L	16+25.00	-40.00	499013.5862	563005.9143
L	21+30.00	-40.00	499446.5026	562745.8981
L	21+30.00	-75.00	499428.4817	562715.8940
L	22+10.00	-40.00	499515.0834	562704.7074
L	14+80.00	40.00	498931.2644	563149.3131
L	15+54.05	55.00	499001.6784	563123.8845
L	16+20.00	40.00	499050.4906	563077.0695
L	22+80.00	40.00	499616.2823	562737.2464
L	22+80.00	56.23	499624.6409	562751.1631
L	22+80.00	65.00	499629.1544	562758.6779
L	22+46.96	58.81	499597.6414	562770.3787
L	22+00.00	50.00	499552.8504	562787.0097
L	21+30.00	50.00	499492.8421	562823.0515
L	21+30.00	40.00	499487.6933	562814.4789

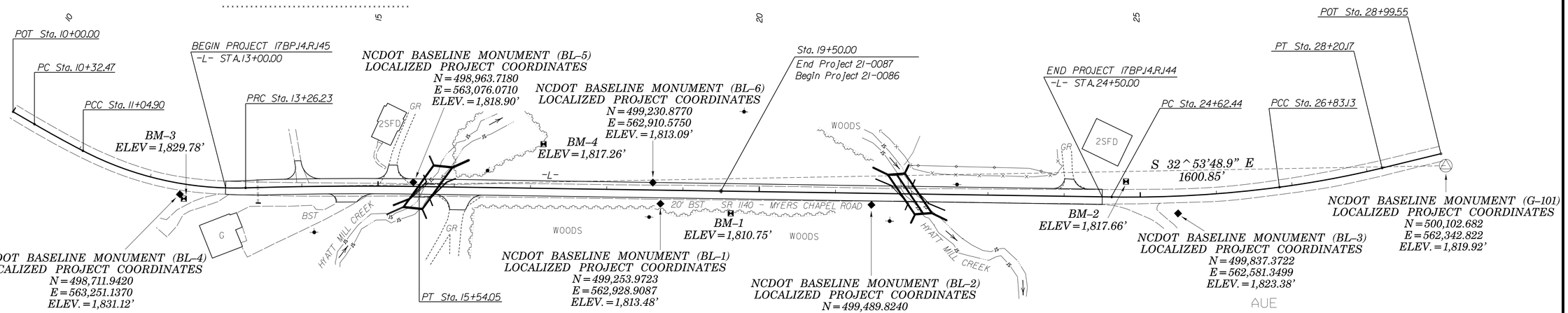

-L- FINAL

TYPE	STATION	NORTH	EAST
POT	10+00.00	498469.0313	563274.6430
PC	10+32.47	498501.4825	563273.6901
PCC	11+04.90	498573.8099	563269.8167
PRC	13+26.23	498780.7941	563198.4467
PT	15+54.05	498973.3598	563076.7352
PC	24+62.44	499752.0888	562609.0187
PCC	26+83.13	499932.2468	562481.9104
PT	28+20.17	500033.3334	562389.4793
POT	28+99.55	500089.0174	562332.8960

AUE

-FINAL- ROW MARKER PERMANENT EASEMENT-E

ALIGN	STATION	OFFSET	NORTH	EAST
L	20+25.22	-40.00	499356.6748	562799.8500
L	19+65.83	-89.09	499280.4948	562788.3413
L	19+91.32	-119.92	499286.4700	562748.7901
L	20+87.99	-40.00	499410.4922	562767.5265
L	24+87.55	12.50	499780.1135	562606.5209
L	24+85.78	40.36	499793.3177	562631.1151
L	22+46.96	58.81	499597.6414	562770.3787
L	22+21.92	60.75	499577.1824	562784.9395
L	23+40.51	132.37	499715.7158	562785.2734
L	23+19.83	166.61	499715.6194	562825.2733
L	14+21.18	46.29	498885.2564	563185.6896
L	16+44.55	130.57	499118.1721	563142.0674
L	16+34.10	158.69	499123.6872	563171.5561
L	14+09.82	74.11	498890.7816	563215.1764

-FINAL- ROW MARKER IRON PIN AND CAP-E

ALIGN	STATION	OFFSET	NORTH	EAST
L	13+00.00	-12.50	498752.2483	563201.4836
L	13+00.00	-40.00	498738.4377	563177.7030
L	13+26.23	-40.00	498758.6583	563165.1299
L	15+54.05	-40.00	498952.7644	563042.4448
L	16+55.00	-40.00	499039.3041	562990.4678
L	16+90.00	-15.00	499082.1802	562993.8784
L	18+65.00	-15.00	499232.2008	562903.7737
L	19+05.00	-40.00	499253.6191	562861.7469
L	23+90.00	-40.00	499669.3903	562612.0284
L	24+50.17	-12.42	499735.1698	562604.6894
L	24+50.00	12.58	499747.8977	562626.2088
L	24+50.00	20.00	499751.7189	562632.5710
L	23+90.00	40.00	499710.5809	562680.6092
L	19+00.00	40.00	499290.5235	562932.9021
L	16+20.00	40.00	499050.4906	563077.0695
L	15+54.05	40.00	498993.9551	563111.0256
L	14+80.00	40.00	498931.2644	563149.3131
L	14+80.00	30.00	498925.9892	563140.8177
L	13+25.00	30.00	498796.2990	563224.1609
L	13+00.00	30.00	498773.5920	563238.2354
L	13+00.00	12.50	498764.8034	563223.1023

DATUM DESCRIPTION

THE LOCALIZED COORDINATE SYSTEM DEVELOPED FOR THIS PROJECT IS BASED ON THE STATE PLANE COORDINATES ESTABLISHED BY NCDOT FOR MONUMENT "BD5114H G-101" WITH NAD 83/NSRS 2007 STATE PLANE GRID COORDINATES OF NORTHING: 500102.682(ft) EASTING: 562342.822(ft) ELEVATION: 1819.92(ft)
THE AVERAGE COMBINED GRID FACTOR USED ON THIS PROJECT (GROUND TO GRID) IS: 0.999797826
THE N.C. LAMBERT GRID BEARING AND LOCALIZED HORIZONTAL GROUND DISTANCE FROM "BD5114H G-101" TO -L- STATION 13+00.00 IS S 32°53'48.9" E 1600.85'
ALL LINEAR DIMENSIONS ARE LOCALIZED HORIZONTAL DISTANCES
VERTICAL DATUM USED IS NAVD 88

GEOID MODEL - G09NC
NOTE: DRAWING NOT TO SCALE

NOTES:

1. *THE CONTROL DATA FOR THIS PROJECT CAN BE FOUND ELECTRONICALLY BY SELECTING PROJECT CONTROL DATA AT:*
   HTTPS://CONNECT.NCDOT.GOV/RESOURCES/LOCATION/

   THE FILES TO BE FOUND ARE AS FOLLOWS:
   210086_LS_CONTROL.TXT

   SITE CALIBRATION INFORMATION HAS NOT BEEN PROVIDED FOR THIS PROJECT. IF FURTHER CONTROL INFORMATION IS NEEDED, PLEASE CONTACT THE LOCATION AND SURVEYS UNIT.

△ *INDICATES GEODETIC CONTROL MONUMENTS USED OR SET FOR HORIZONTAL PROJECT BY THE NCDOT LOCATION AND SURVEYS UNIT.*
PROJECT CONTROL ESTABLISHED USING GLOBAL POSITIONING SYSTEM.

6/2/99
10/24/2016
S:\Transportation\31236-01 MTC 14SP.20221.1 Clay 86\Roadway\Proj\210086-87_ls_c-1.dgn
User:mtzquick

DocuSign Envelope ID: E3EC837A-DCE7-4E39-A3A1-5D74A04A69E3

PROJECT REFERENCE NO.	SHEET NO.
14SP.2022.1.1/14SP.2022.1.2	2A-1
ROADWAY DESIGN ENGINEER	PAVEMENT DESIGN ENGINEER
NORTH CAROLINA PROFESSIONAL SEAL 26960 ENGINEER — DocuSigned by: Kelly Lynchmyer, PE, Senior Project Manager, Mc Scale, PE — 11/4/2016	NORTH CAROLINA PROFESSIONAL SEAL 20134 ENGINEER — DocuSigned by: Kelly M. Bass, PE, Senior Project Manager, Mc Scale, PE — 11/4/2016

DOCUMENT NOT CONSIDERED FINAL UNLESS ALL SIGNATURES COMPLETED

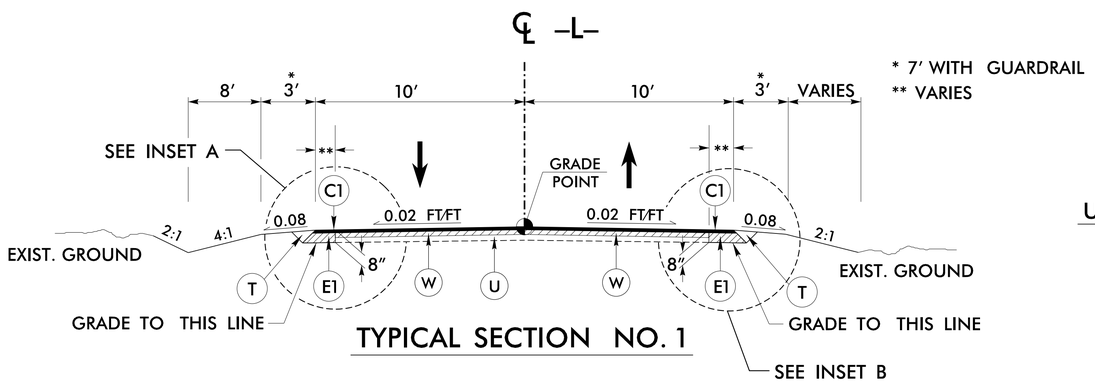

* 7′ WITH GUARDRAIL
** VARIES

TYPICAL SECTION NO. 1

USE TYPICAL SECTION NO. 1

–L– STA. 13+00 TO –L– STA. 15+32
–L– STA. 16+00 TO –L– STA. 17+55
–L– STA. 18+60 TO –L– STA. 21+65
–L– STA. 22+30 TO –L– STA. 24+50

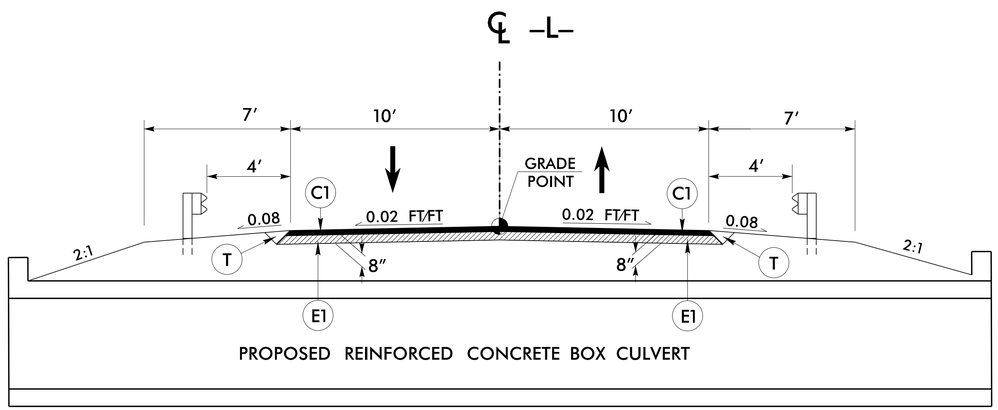

TYPICAL SECTION NO. 2

USE TYPICAL SECTION NO. 2

–L– STA. 15+32 TO –L– STA. 16+00
–L– STA. 21+65 TO –L– STA. 22+30

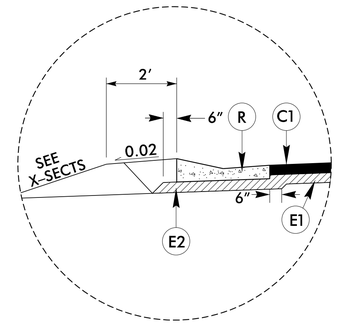

INSET A

–L– STA. 16+90 TO –L– STA. 18+83 LT

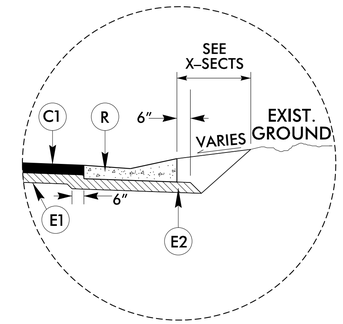

INSET B

–L– STA. 16+37 TO –L– STA. 18+83 RT

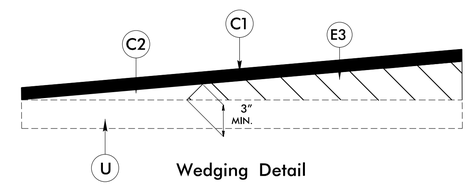

Wedging Detail

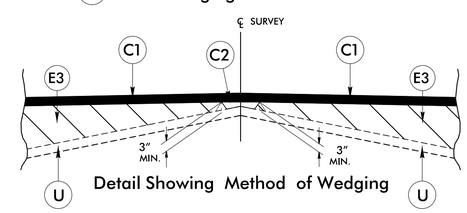

Detail Showing Method of Wedging

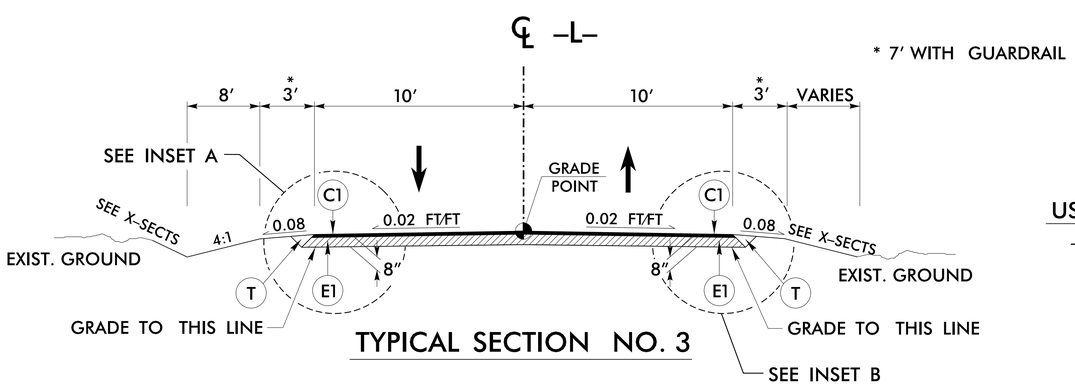

* 7′ WITH GUARDRAIL

TYPICAL SECTION NO. 3

USE TYPICAL SECTION NO. 3

–L– STA. 17+55 TO –L– STA. 18+60

	PAVEMENT SCHEDULE
C1	PROP. APPROX. 3″ ASPHALT CONCRETE SURFACE COURSE, TYPE S9.5B, AT AN AVERAGE RATE OF 168 LBS. PER SQ. YD. IN EACH OF TWO LAYERS.
C2	PROP. VAR. DEPTH ASPHALT CONCRETE SURFACE COURSE, TYPE S9.5B AT AN AVERAGE RATE OF 112 LBS. PER SQ. YD. PER 1″ DEPTH. TO BE PLACED IN LAYERS NOT TO EXCEED 2″ IN DEPTH.
E1	PROP. APPROX. 5″ ASPHALT CONCRETE BASE COURSE, TYPE B25.0B, AT AN AVERAGE RATE OF 570 LBS. PER SQ. YD.
E2	PROP. APPROX. 4″ ASPHALT CONCRETE BASE COURSE, TYPE B25.0B, AT AN AVERAGE RATE OF 456 LBS. PER SQ. YD.
E3	PROP. VAR. DEPTH ASPHALT CONCRETE BASE COURSE, TYPE B25.0B, AT AN AVERAGE RATE OF 114 LBS. PER SQ. YD. PER 1″ DEPTH. TO BE PLACED IN LAYERS NOT LESS THAN 3″ IN DEPTH OR GREATER THAN 5½″ IN DEPTH.
R	EXPRESSWAY GUTTER (NCDOT STD. DRAWING NO. 846.01)
T	EARTH MATERIAL
U	EXISTING PAVEMENT
W	PROPOSED WEDGING (SEE APPROPRIATE DETAILS)

NOTE: PAVEMENT EDGE SLOPES ARE 1:1 UNLESS SHOWN OTHERWISE

6/2/99
11/4/2016
S:\Transportation\31236-01 MTC 14SP.2022.1.1 Clay 86\Roadway\Proj\BD5114_Rdy_086_typ.dgn
USER: jmartell

COMPUTED BY: JDS DATE: 12-6-13
CHECKED BY: ACC DATE: 12-6-13

STATE OF NORTH CAROLINA
DIVISION OF HIGHWAYS

DOCUMENT NOT CONSIDERED FINAL UNLESS ALL SIGNATURES COMPLETED

PROJECT REFERENCE NO.	SHEET NO.
14SP.20221J/14SP.20221.2	3B-1

PAVEMENT REMOVAL SUMMARY

IN SQUARE YARDS					
LINE	LOCATION	ASPHALT REMOVAL	ASPHALT BREAK-UP	CONCRETE REMOVAL	CONCRETE REMOVAL
-L-	15+32 TO 16+00	117			
-L-	17+55 TO 18+60	211			
-L-	21+65 TO 22+30	120			
	TOTAL	448			
	SAY	450			

Approximate quantities only. Unclassified excavation, borrow excavation, fine grading, clearing and grubbing, and removal of existing pavement will be paid for at the contract lump sum price for "grading".

SUMMARY OF EARTHWORK

IN CUBIC YARDS

LOCATION	UNCLASSIFIED EXCAVATION	UNDERCUT	EMBT+%	BORROW	WASTE
SUMMARY NO. 1					
-L- STA. 13+00 TO STA. 19+50	511		856	345	
SUBTOTAL SUMMARY NO. 1	511		856	345	
SUMMARY NO. 2					
-L- STA. 19+50 TO STA. 24+50	101		2,032	1,931	
SUBTOTAL SUMMARY NO. 2	101		2,032	1,931	
PROJECT SUBTOTALS	612		2,888	2,276	
EST. LOSS DUE TO CLEARING AND GRUBBING	-20			20	
PROJECT TOTAL	592		2,888	2,296	
EST. 5% FOR REPLACING TOP SOIL ON BORROW PITS				115	
GRAND TOTAL	592			2,411	
SAY	630			2,500	
DDE = 45 CY					

Approximate quantities only. Unclassified excavation, borrow excavation, fine grading, clearing and grubbing, and removal of existing pavement will be paid for at the contract lump sum price for "grading".

CONTINGENCY ITEMS:

INCIDENTAL STONE = 100 TONS

UNDERCUT EXCAVATION = 100 CY

SELECT GRANULAR MATERIAL = 100 CY

CLASS IV SUBGRADE STABILIZATION = 100 TONS

GEOTEXTILE FOR SOIL STABILIZATION = 100 SY

"N" = DISTANCE FROM EDGE OF LANE TO FACE OF GUARDRAIL.
TOTAL SHOULDER WIDTH = DISTANCE FROM EDGE OF TRAVEL LANE TO SHOULDER BREAK POINT.
FLARE LENGTH = DISTANCE FROM LAST SECTION OF PARALLEL GUARDRAIL TO END OF GUARDRAIL.
W = TOTAL WIDTH OF FLARE FROM BEGINNING OF TAPER TO END OF GUARDRAIL.
G = GATING IMPACT ATTENUATOR TYPE 350
NG = NON-GATING IMPACT ATTENUATOR TYPE 350

GUARDRAIL SUMMARY

SURVEY LINE	BEG. STA.	END STA.	LOCATION	LENGTH			WARRANT POINT		"N" DIST. FROM E.O.L.	TOTAL SHOUL. WIDTH	FLARE LENGTH		W		ANCHORS									IMPACT ATTENUATOR TYPE 350			SINGLE FACED GUARDRAIL	REMOVE EXISTING GUARDRAIL	REMOVE AND STOCKPILE EXISTING GUARDRAIL	REMARKS
				STRAIGHT	SHOP CURVED	DOUBLE FACED	APPROACH END	TRAILING END			APPROACH END	TRAILING END	APPROACH END	TRAILING END	XI MOD	XI	GRAU 350	GRAU 350 TL-2	IA-350 TL-2	TYPE III	TYPE III SHOP CURVED	B-77	AT-1	EA	G	NG				
-L-	13+05.55	14+30.22	RT	125			13+05.55	14+30.22	4	7	50	50	1	1			2													
-L-	14+87.50	15+89.80	RT	93.75	25		14+87.50	15+89.80	4	7	50		1				1						1							GUARDRAIL MOUNTED TO CULVERT SEE CULVERT PLANS
-L-	15+27.51	16+70.22	LT	143.75	12.5		16+70.22	15+27.51	4	7	50		1				1						1							
		14SP.20221.2 SUBTOTAL		362.5	37.5												4						2							
		LESS DEDUCTIONS FOR ANCHORS																												
		GRAU-350 TL-3 4 @ 50'=		-200																										
		AT-1 2 @ 6.25'=		-12.5																										
		14SP.20221.2 PROJECT TOTALS:		150	37.5																									
		ADDITIONAL GUARDRAIL POSTS=5 EA.																												
-L-	19+35.00	23+95.15	LT	456.25	25		23+95.15	19+35.00	4	7		50		1			1						1							GUARDRAIL MOUNTED TO CULVERT SEE CULVERT PLANS
-L-	20+75.00	24+46.55	RT	375			20+75.00	24+46.55	4	7	50	50	1	1			2													
		14SP.20221.1 SUBTOTAL		831.25	25												3						1							
		LESS DEDUCTIONS FOR ANCHORS																												
		GRAU-350 TL-3 3 @ 50'=		-150																										
		AT-1 1 @ 6.25'=		-6.25																										
		14SP.20221.1 PROJECT TOTALS:		675	25																									
		ADDITIONAL GUARDRAIL POSTS=5 EA.																												

6/21/00
10/24/2016
\\transportation\31236-01 MTC 14SP.20221.1 Clay 86\Roadway\Proj\bd5114_086_087_rdg_sum.dgn
USER: jdsmith

DATE: 12–6–13

DATE: 12–6–13

DOCUMENT NOT CONSIDERED FINAL UNLESS ALL SIGNATURES COMPLETED

PROJECT REFERENCE NO.	SHEET NO.
14SP.2022IJ/14SP.2022I.2	3D-1

DIVISION OF HIGHWAYS
STATE OF NORTH CAROLINA

NOTE: Invert Elevations are for Bid Purposes only and shall not be used for project construction stakeout.
See "Standard Specifications For Roads and Structures, Section 300–5".

SUB–REGIONAL & REGIONAL
LIST OF PIPES, ENDWALLS, ETC. (FOR PIPES 48" & UNDER)

STATION / SIZE / THICKNESS OR GAUGE	LOCATION (LT,RT, OR CL)	STRUCTURE NO. FROM	STRUCTURE NO. TO	TOP ELEVATION	INVERT ELEVATION	INVERT ELEVATION	SLOPE CRITICAL	DRAINAGE PIPE (RCP, CSP, CAAP, HDPE, or PVC) 12"	15"	18"	24"	30"	36"	42"	48"	DO NOT USE RCP	DO NOT USE CSP	DO NOT USE CAAP	DO NOT USE HDPE
14+00	LT	0401																	
15+20	LT	0402																	
15+90	RT	0403																	
18+80	LT	0404		1812.89	1809.89														
					1809.89	1808.49			24										
18+80	RT	0405		1812.89	1809.89														
					1809.89	1809.79			24										
TOTAL									48										

STATION / SIZE / THICKNESS OR GAUGE	C.S. PIPE 12"	15"	18"	24"	36"	42"	48"	R.C. PIPE (CLASS III) 15"	18"	24"	30"	36"	42"	48"	R.C. PIPE (CLASS IV) 12"	15"	18"	24"	30"	36"	42"	48"
	.064	.064	.064	.064	.079	.109	.109															
14+00																						
15+20																						
15+90																						
18+80																						
18+80																						
TOTAL																						

STATION / SIZE / THICKNESS OR GAUGE	** R. C. PIPE (CLASS 'V')	** R. C. PIPE CULVERTS, CONTRACTOR DESIGN PIPE	** R. C. PIPE CULVERTS, CONTRACTOR DESIGN PIPE	15" SIDE DRAIN PIPE	18" SIDE DRAIN PIPE	ENDWALLS STD. 838.01, STD. 838.11 OR STD. 838.80 (UNLESS NOTED OTHERWISE) CU. YDS. R.C.P.	C.S.P.	QUANTITIES FOR DRAINAGE STRUCTURES * TOTAL L.F. FOR PAY QUANTITY SHALL BE COL. "A" + (1.3 X COL. 'B') PER EACH (0' THRU 5.0')	LIN. FT. A 5.0' THRU 10.0'	B 10.0' AND ABOVE	C.B. STD. 840.01 OR STD. 840.02	FRAME, GRATES AND HOOD STANDARD 840.03 TYPE OF GRATE E	F	G	CONCRETE TRANSITIONAL SECTION CATCH BASIN	DROP INLET	T.B.D.I. STD. 840.35	T.B.D.I. FRAME WITH TWO GRATES STD. 840.29	D.I. STD. 840.14	D.I. FRAME WITH TWO GRATES STD. 840.16	15" PIPE END SECTION STD 310.02	CORR. STEEL ELBOWS NO. & SIZE	CONC. COLLARS CL. "B" C.Y. STD 840.72	CONC. & BRICK PIPE PLUG, C.Y. STD. 840.71	PIPE REMOVAL LIN.FT.	REMARKS
14+00				28																		
15+20				36																		
15+90					54																	41
18+80								1									1	1				
18+80								1									1	1			1	
TOTAL				64	54			2									2	2			1				41	

ABBREVIATIONS

C.B.	CATCH BASIN
N.D.I.	NARROW DROP INLET
D.I.	DROP INLET
G.D.I.	GRATED DROP INLET
G.D.I. (N.S.)	GRATED DROP INLET (NARROW SLOT)
J.B.	JUNCTION BOX
M.H.	MANHOLE
T.B.D.I.	TRAFFIC BEARING DROP INLET
T.B.J.B.	TRAFFIC BEARING JUNCTION BOX

DocuSign Envelope ID: 257081C6-D7AB-42C3-BF12-1EC0214A56A1

PROJECT REFERENCE NO.	SHEET NO.
14SP.20221.2	4
R/W SHEET NO.	

ROADWAY DESIGN ENGINEER: NORTH CAROLINA PROFESSIONAL SEAL 26960 ENGINEER Kelly E. Shoulder 11/1/2016

HYDRAULICS ENGINEER: NORTH CAROLINA PROFESSIONAL SEAL 12575 ENGINEER PAUL FISHER 11/1/2016

DOCUMENT NOT CONSIDERED FINAL UNLESS ALL SIGNATURES COMPLETED

V&M Vaughn & Melton Consulting Engineers
Asheville, North Carolina 828-253-2796
Tri-Cities, TN 423-467-8401
Knoxville, TN 865-546-5800
Spartanburg, SC 864-574-4775
Charleston, SC 843-974-5650
Middlesboro, KY 606-248-6600
Atlanta, GA 770-627-3509
Charlotte, NC 704-357-0488
Boone, NC 828-355-9933
Copyright © 2006 Vaughn & Melton, Inc. All Rights Reserved

SILL DETAIL

2 @ 9'X10' RCBC BURIED 1' WITH 2' SILL IN EAST BARREL

NG, 2:1, 2' SILL, 2:1, NG

(NOT TO SCALE)

Backfill East barrel with class I Rip Rap to Sill height @ inlet and outlet.

DETAIL 1
LATERAL BASE DITCH (Not to Scale)

Natural Ground, d, 2:1, D, 2:1, 1'Ft., Fill Slope, Filter Fabric, B, b

Min. D = 1 Ft.
Max. D = 1 Ft.
B = 2 Ft.
b = 5 Ft.

Type of Liner = Est. 16 Tons CL B Rip-Rap
Est. 45 SY of Geotextile
DDE = 20 CY

FROM STA. 15+40 LT TO STA. 15+75 LT

DETAIL 2
CUT DITCH (Not to Scale)

Natural Ground, 5:1, D, 4:1 or Flatter, Front Ditch Slope

Min. D = 1Ft.

-L- STA. 19+00 TO 19+50 RT

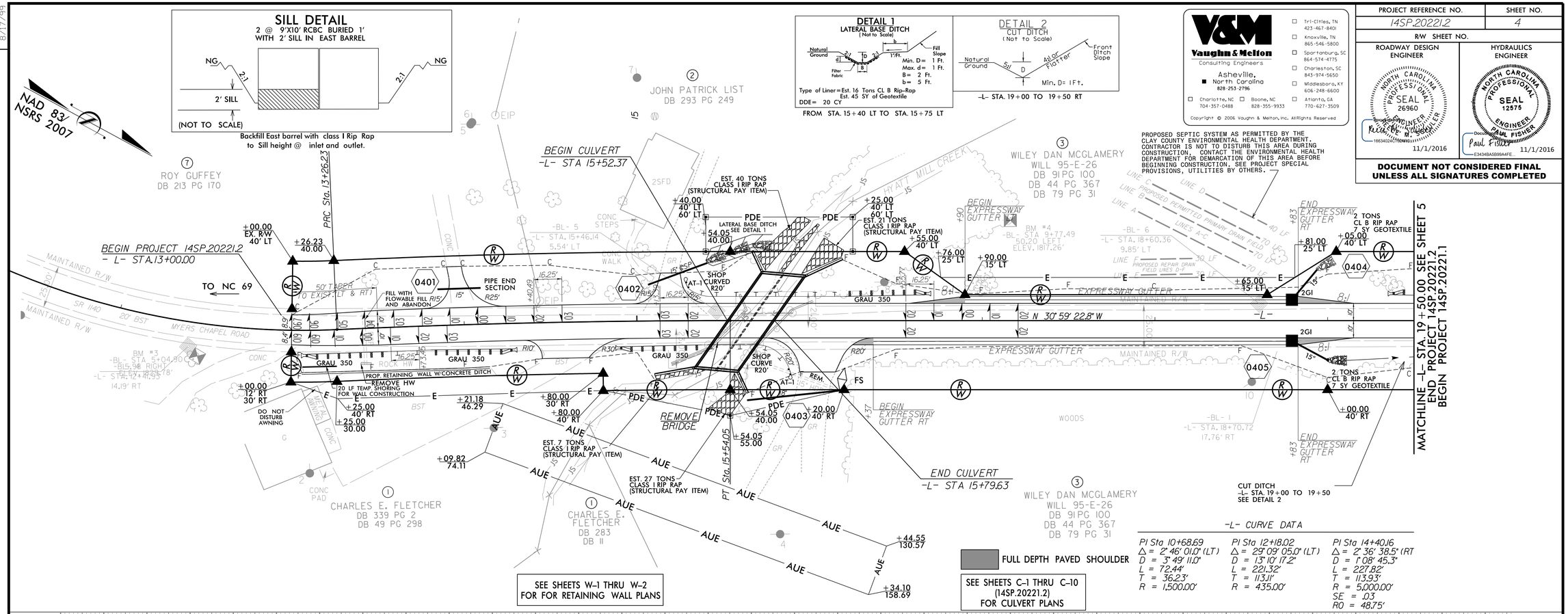

-L- CURVE DATA

PI Sta 10+68.69	PI Sta 12+18.02	PI Sta 14+40.16
Δ = 2° 46' 01.0" (LT)	Δ = 29° 09' 05.0" (LT)	Δ = 2° 36' 38.5" (RT)
D = 3° 49' 11.0"	D = 13° 10' 17.2"	D = 1° 08' 45.3"
L = 72.44'	L = 221.32'	L = 227.82'
T = 36.23'	T = 113.11'	T = 113.93'
R = 1,500.00'	R = 435.00'	R = 5,000.00'
		SE = .03
		RO = 48.75'

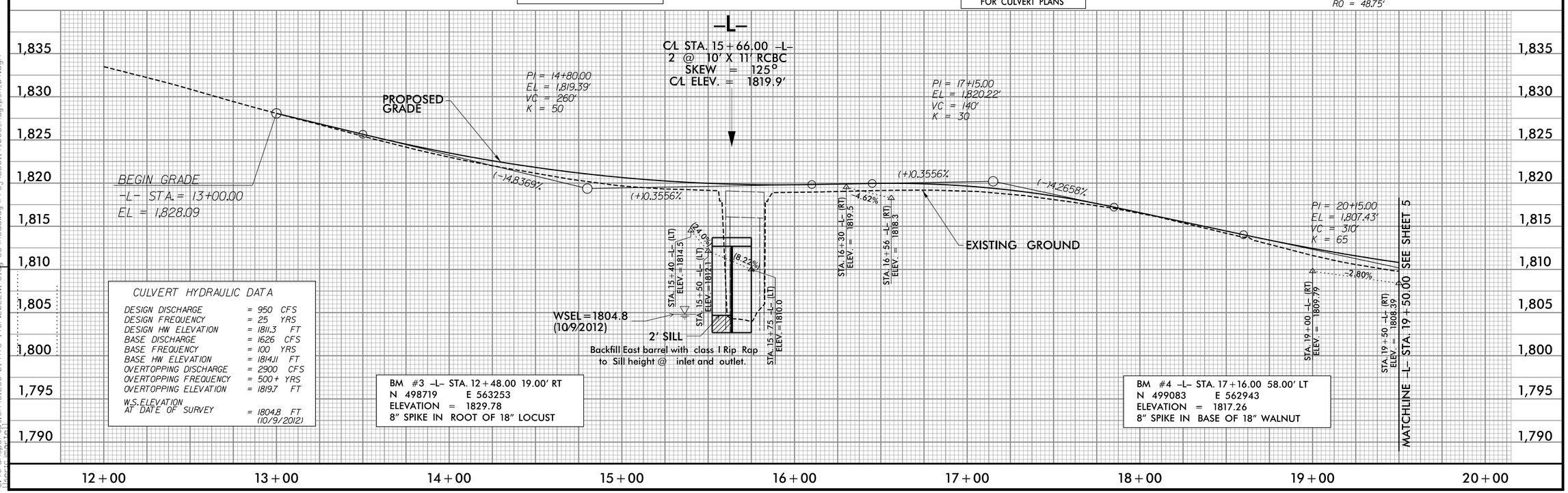

CULVERT HYDRAULIC DATA

DESIGN DISCHARGE	= 950	CFS
DESIGN FREQUENCY	= 25	YRS
DESIGN HW ELEVATION	= 1811.3	FT
BASE DISCHARGE	= 1626	CFS
BASE FREQUENCY	= 100	YRS
BASE HW ELEVATION	= 1814.11	FT
OVERTOPPING DISCHARGE	= 2900	CFS
OVERTOPPING FREQUENCY	= 500+	YRS
OVERTOPPING ELEVATION	= 1819.7	FT
W.S.ELEVATION AT DATE OF SURVEY	= 1804.8 (10/9/2012)	FT

BM #3 -L- STA. 12+48.00 19.00' RT
N 498719 E 563253
ELEVATION = 1829.78
8" SPIKE IN ROOT OF 18" LOCUST

BM #4 -L- STA. 17+16.00 58.00' LT
N 499083 E 562943
ELEVATION = 1817.26
8" SPIKE IN BASE OF 18" WALNUT

REVISIONS

8/17/99

11/1/2016
G:\Transportation\31236-01 MTC 14SP.20221.1 Clay 86\Roadway\Proj\B05114.086.Rdy_psh_04.dgn
(Basic_metric)

DocuSign Envelope ID: 257081C6-D7AB-42C3-BF12-1EC0214A56A1

V&M
Vaughn & Melton
Consulting Engineers
Asheville, North Carolina
828-253-2796
Charlotte, NC 704-357-0488
Boone, NC 828-355-9933
Tri-Cities, TN 423-467-8401
Knoxville, TN 865-546-5800
Spartanburg, SC 864-574-4775
Charleston, SC 843-974-5650
Middlesboro, KY 606-248-6600
Atlanta, GA 770-627-3509
Copyright © 2006 Vaughn & Melton, Inc. All Rights Reserved

PROJECT REFERENCE NO.	SHEET NO.
14SP.20221.1	5
R/W SHEET NO.	

ROADWAY DESIGN ENGINEER
NORTH CAROLINA PROFESSIONAL SEAL 26960 ENGINEER
DocuSigned by: Kevin M. Schulter
16634024C7B24FC...
11/1/2016

HYDRAULICS ENGINEER
NORTH CAROLINA PROFESSIONAL SEAL 12575 ENGINEER PAUL FISHER
DocuSigned by: Paul Fisher
E3434BA5B99A4FE...
11/1/2016

DOCUMENT NOT CONSIDERED FINAL UNLESS ALL SIGNATURES COMPLETED

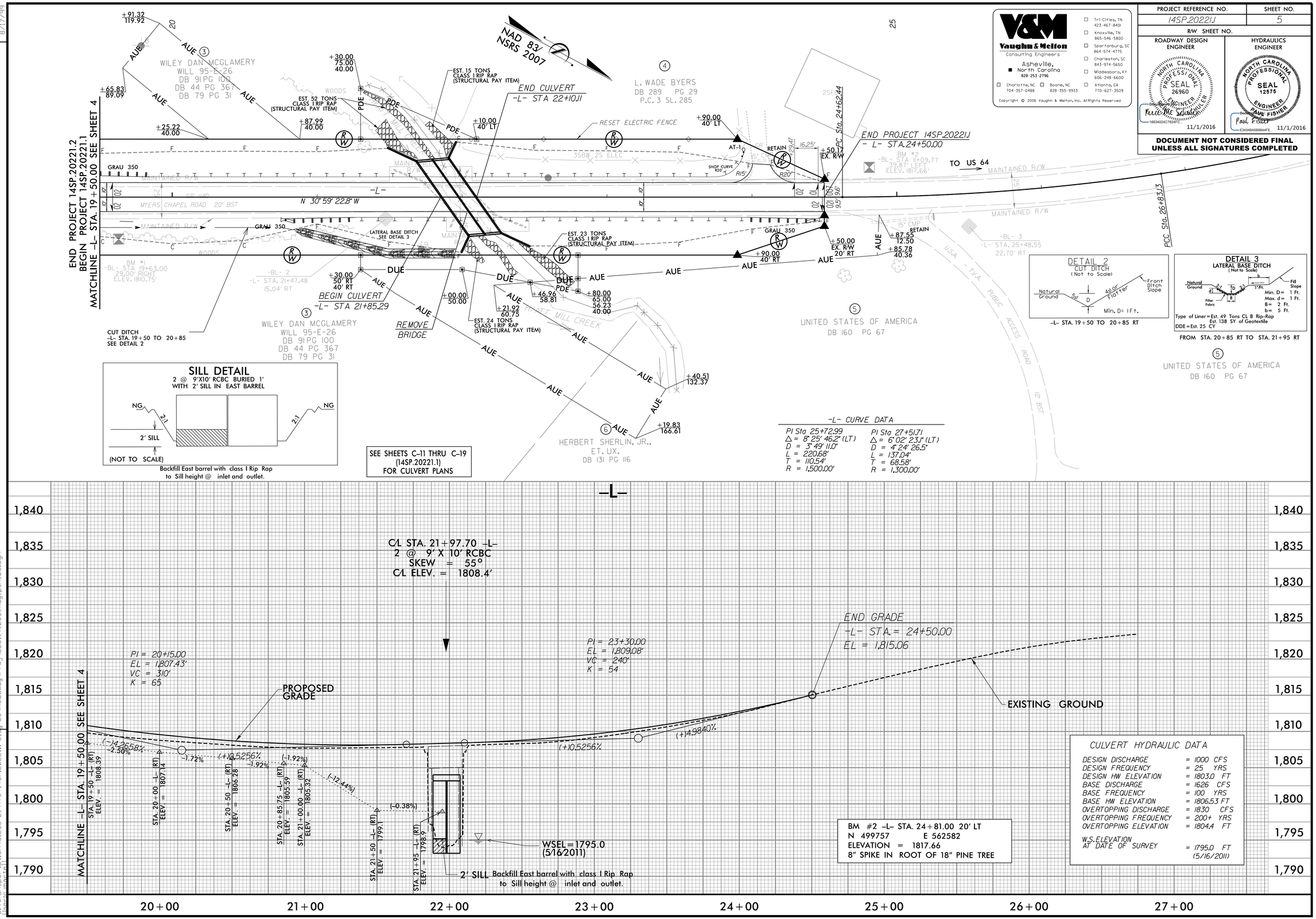

8/17/99

11/1/2016
g:\Transportation\31236-01 MTC 14SP.20221.1 Clay 86\Roadway\Proj\B05114.086.Rdy.psh.05.dgn
(Series (metric))

DocuSign Envelope ID: 802A9456-4450-4837-B91F-6CECCC31086F

STATE OF NORTH CAROLINA
DIVISION OF HIGHWAYS

TRANSPORTATION MANAGEMENT PLAN

CLAY COUNTY

DIVISION 14

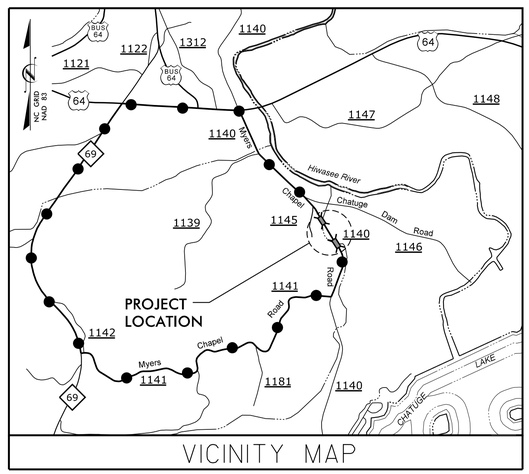

VICINITY MAP

OFF-SITE DETOUR ROUTE

LOCATION: BRIDGE NO. 86 & NO. 87 OVER HYATT MILL CREEK ON SR 1140 (MYERS CHAPEL ROAD)

INDEX OF SHEETS

SHEET NO.	TITLE
TMP-1	TITLE SHEET, LEGEND, AND INDEX OF SHEETS
TMP-1A	LIST OF APPLICABLE ROADWAY STANDARD DRAWINGS, GENERAL NOTES AND TRANSPORTATION OPERATIONS
TMP-2	SPECIAL SIGN DESIGN
TMP-3	TEMPORARY TRAFFIC CONTROL DETAIL, PHASING NOTES OFFSITE DETOUR SIGNING AND ROAD CLOSURE

LEGEND

GENERAL

NORTH ARROW

TRAFFIC CONTROL DEVICES

BARRICADE (TYPE III)

TEMPORARY SIGNING

STATIONARY SIGN

SHEET NO.
TMP-1

PROJECT: 14SP.20221.1/14SP.20221.2

DOCUMENT NOT CONSIDERED FINAL UNLESS ALL SIGNATURES COMPLETED

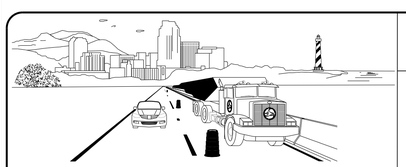

WORK ZONE SAFETY & MOBILITY
"from the MOUNTAINS to the COAST"

N.C.D.O.T. WORK ZONE TRAFFIC CONTROL
1580 MAIL SERVICE CENTER (MSC) RALEIGH, NC 27699-1580
1020 BIRCH RIDGE DRIVE, RALEIGH, NC 27610 (DELIVERY)
PHONE: (919) 250-4094 FAX: (919) 250-4098

J. S. BOURNE, P.E. — STATE TRAFFIC MANAGEMENT ENGINEER
LLOYD D. BROWN, P.E. — TRAFFIC CONTROL PROJECT ENGINEER
REECE M. SCHULER, P.E. — TRAFFIC CONTROL PROJECT DESIGN ENGINEER
C. GONZALEZ-MARTELL — TRAFFIC CONTROL DESIGN ENGINEER

DIVISION OF HIGHWAYS · STATE OF NORTH CAROLINA · DEPARTMENT OF TRANSPORTATION · WORK ZONE TRAFFIC CONTROL

V&M Vaughn & Melton
Consulting Engineers

Copyright © 2006 Vaughn & Melton, Inc.
All Rights Reserved

Asheville, North Carolina 828-253-2796
Charlotte, North Carolina 704-357-0488
Boone, North Carolina 828-355-9933

PROJECT ENGINEER: LLOYD D. BROWN, P.E.
DESIGN ENGINEER: C. GONZALEZ-MARTELL

APPROVED: DocuSigned by: Lloyd DeWayne Brown 33954DF17F5744...
DATE: 11/4/2016

SEAL

11/4/2016
S:\Transportation\31236-01MTC 14SP.20221\Clay 86\Traffic\TrafficControl\TCP\BD-5114_086_087_tmp-1.dgn
User:cjmartell

DocuSign Envelope ID: 802A9456-4450-4837-B91F-6CECCC31086F

PROJ. REFERENCE NO.	SHEET NO.
14SP.20221.1/ 14SP.20221.2	TMP-1A

ROADWAY STANDARD DRAWINGS

THE FOLLOWING ROADWAY STANDARDS AS SHOWN IN "ROADWAY STANDARD DRAWINGS" - PROJECT SERVICES UNIT - N.C. DEPARTMENT OF TRANSPORTATION - RALEIGH, N.C., DATED JANUARY 2012 ARE APPLICABLE TO THIS PROJECT AND BY REFERENCE HEREBY ARE CONSIDERED A PART OF THESE PLANS:

STD. NO.	TITLE
1101.01	WORK ZONE ADVANCE WARNING SIGNS
1101.02	TEMPORARY LANE CLOSURES
1101.03	TEMPORARY ROAD CLOSURES
1101.04	TEMPORARY SHOULDER CLOSURES
1101.05	WORK ZONE VEHICLE ACCESSES
1101.11	TRAFFIC CONTROL DESIGN TABLES
1110.01	STATIONARY WORK ZONE SIGNS
1110.02	PORTABLE WORK ZONE SIGNS
1130.01	DRUMS
1145.01	BARRICADES
1150.01	FLAGGING DEVICES
1180.01	SKINNY-DRUM
1205.01	PAVEMENT MARKINGS - LINE TYPES & OFFSETS
1205.04	PAVEMENT MARKINGS - INTERSECTIONS
1205.08	PAVEMENT MARKINGS - SYMBOLS & WORD MESSAGES
1205.12	PAVEMENT MARKINGS - BRIDGES
1261.01	GUARDRAIL & BARRIER DELINEATOR SPACING
1261.02	GUARDRAIL & BARRIER DELINEATOR TYPES
1262.01	GUARDRAIL END DELINEATION

TRANSPORTATION OPERATIONS

CONSTRUCTION

REMOVE AND REPLACE EXISTING STRUCTURE AND APPROACHES ALONG THE EXISTING ROADWAY ALIGNMENT AS SHOWN IN THE CONSTRUCTION PLANS.

TMP DESIGN PARAMETERS

TRAFFIC WILL BE DETOURED OFF-SITE DURING THE CONSTRUCTION PERIOD.

THE OFF-SITE DETOUR WILL INCLUDE SR 1140, SR 1141, NC 69, AND US 64 (SEE SHEET TMP-2).

GENERAL NOTES

CHANGES MAY BE REQUIRED WHEN PHYSICAL DIMENSIONS IN THE DETAIL DRAWINGS, STANDARD DETAILS AND ROADWAY DETAILS ARE NOT ATTAINABLE TO MEET FIELD CONDITIONS, OR RESULT IN DUPLICATE, OR UNDESIRED OVERLAPPING OF DEVICES. MODIFICATION MAY INCLUDE: MOVING, SUPPLEMENTING, COVERING OR REMOVAL OF DEVICES, AS DIRECTED BY THE ENGINEER.

THE FOLLOWING GENERAL NOTES APPLY AT ALL TIMES FOR THE DURATION OF THE CONSTRUCTION PROJECT, EXCEPT WHEN OTHERWISE NOTED IN THE PLAN, OR DIRECTED BY THE ENGINEER.

TRAFFIC PATTERN ALTERATIONS

A) NOTIFY THE ENGINEER TWENTY ONE (21) CALENDAR DAYS PRIOR TO ANY TRAFFIC PATTERN ALTERATION.

SIGNING

B) PROVIDE SIGNING AND DEVICES REQUIRED TO CLOSE THE ROAD ACCORDING TO THE ROADWAY STANDARD DRAWINGS AND TRAFFIC CONTROL PLANS.

PROVIDE SIGNING REQUIRED FOR THE OFF-SITE DETOUR ROUTE AS SHOWN IN THE TRAFFIC CONTROL PLANS.

C) COVER OR REMOVE ALL SIGNS AND DEVICES REQUIRED TO CLOSE THE ROAD WHEN ROAD CLOSURE IS NOT IN OPERATION.

COVER OR REMOVE ALL SIGNS REQUIRED FOR THE OFF-SITE DETOUR WHEN THE DETOUR IS NOT IN OPERATION.

D) ENSURE ALL NECESSARY SIGNING IS IN PLACE PRIOR TO ALTERING ANY TRAFFIC PATTERN.

TRAFFIC CONTROL DEVICES

E) PLACE TYPE III BARRICADES WITH "ROAD CLOSED" SIGN R-11-2 ATTACHED OF SUFFICIENT LENGTH TO CLOSE ENTIRE ROADWAY.

PAVEMENT MARKINGS

F) INSTALL PAVEMENT MARKINGS (PAINT) ON THE FINAL SURFACE OF THE ENTIRE PROJECT.

G) TIE PROPOSED PAVEMENT MARKING LINES TO EXISTING PAVEMENT MARKING LINES.

LOCAL NOTES

1. NOTIFY CLAY COUNTY EMERGENCY SERVICES AND PUBLIC SCHOOLS AT LEAST ONE MONTH PRIOR TO ROAD CLOSURE.

V&M
Vaughn & Melton
Consulting Engineers
Asheville, North Carolina
828-253-2796
Charlotte, NC 704-357-0488
Boone, NC 828-355-9933
Tri-Cities, TN 423-467-8401
Knoxville, TN 865-546-5800
Spartanburg, SC 864-574-4775
Charleston, SC 843-974-5650
Middlesboro, KY 606-248-6600
Atlanta, GA 770-627-3509
Copyright © 2006 Vaughn & Melton, Inc. All Rights Reserved

APPROVED DocuSigned by: Lloyd DeWayne Brown DATE: 11/4/2016
SEAL
NORTH CAROLINA PROFESSIONAL SEAL 20119 ENGINEER LLOYD D. BROWN

DIVISION OF HIGHWAYS · STATE OF NORTH CAROLINA · DEPARTMENT OF TRANSPORTATION · WORK ZONE TRAFFIC CONTROL

DOCUMENT NOT CONSIDERED FINAL UNLESS ALL SIGNATURES COMPLETED

ROADWAY STANDARD DRAWINGS
GENERAL NOTES &
TRANSPORTATION OPERATIONS

11/4/2016
S:\Transportation\3136-01MTC 14SP.20221.1\Clay 86\Traffic\TrafficControl\TCP\BD-5114_086_087_tmp-1a.dgn
User:cjmartell

DocuSign Envelope ID: 802A9456-4450-4837-B91F-6CECCC31086F

PROJ. REFERENCE NO.	SHEET NO.
14SP.20221.1/ 14SP.20221.2	TMP-2

SIGN NUMR: MYERS CHAPEL RD
TYPE: D Ground
QUANTITY: 7

BACKG. COLOR: Orange
COPY COLOR: Black

DESIGN BY: JDS
PROJECT ID: 14SP.20221.1/ 14SP.20221.2

CHK BY: LDB
DIV: 14

STD #: STD
DATE: October 10, 2014

SIGN WIDTH: 4′-0″
HEIGHT: 1′-6″
TOTAL AREA: 6.0 Sq.Ft.

MAT′L: 0.063 in.(1.6 mm) ALUMINUM

BORDER TYPE: FLUSH
RECESS: 0.47″
WIDTH: 0.63″
RADII: 1.5″

NO. Z BARS:
LENGTH: in.

SYMBOL	X	Y	WID	HT

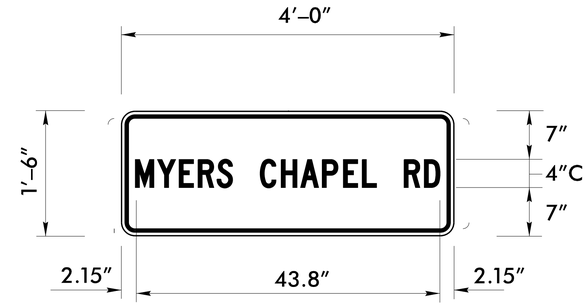

BORDER
R = 1.5″
TH = 0.63″
IN = 0.47″

Panel Style: construction_guide.ssi
M.U.T.C.D.: 2009 Edition

USE NOTES: 1,3,4

1. Legend and border shall be direct applied encapsulated lens reflective sheeting.
2. Legend and border shall be direct applied enclosed lens reflective sheeting.
3. Shields shall be encapsulated lens reflective sheeting on 0.8mm aluminum and demountable.
4. Background shall be encapsulated lens reflective sheeting.
5. Background shall be enclosed lens reflective sheeting.
6. Center arrows vertically on sign.

LETTER POSITIONS

Letter spacings are to start of next letter

																											Series/Size Text Length
		M	Y	E	R	S		C	H	A	P	E	L		R	D											C 2000/4.5
	2.1	3.2	3.1	2.7	2.7	2.3	4	3	2.8	3.1	3	2.7	2.1	4	2.9	2.2	2.1										43.8

Spacing Factor is 1 unless specified otherwise

FILENAME: GS40_ENGL

DOCUMENT NOT CONSIDERED FINAL UNLESS ALL SIGNATURES COMPLETED

APPROVED: DocuSigned by: Lloyd DeWayne Brown DATE: 11/4/2016

SEAL

NORTH CAROLINA PROFESSIONAL SEAL 20119 ENGINEER LLOYD D. BROWN

DIVISION OF HIGHWAYS STATE OF NORTH CAROLINA DEPARTMENT OF TRANSPORTATION WORK ZONE TRAFFIC CONTROL

SPECIAL SIGN DESIGN

11/4/2016
S:\Transportation\3i236-01MTC 14SP.20221\Clay 86\Traffic\TrafficControl\TCP\BD-5114_086_087_tmp-2.dgn
USER:tcmartell

DocuSign Envelope ID: 802A9456-4450-4837-B91F-6CECCC31086F

PROJ. REFERENCE NO.	SHEET NO.
14SP.20221.1/ 14SP.20221.2	TMP-3

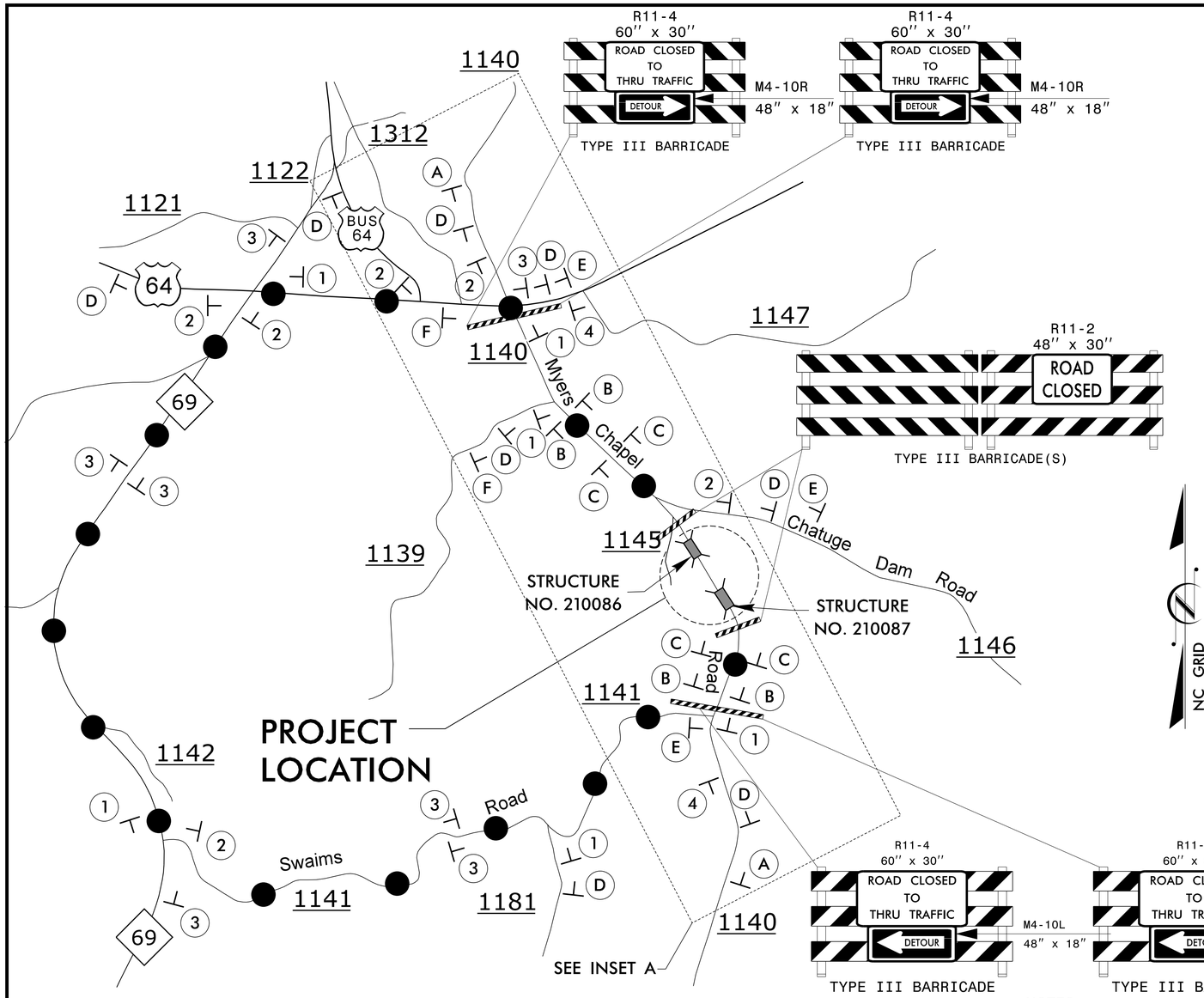

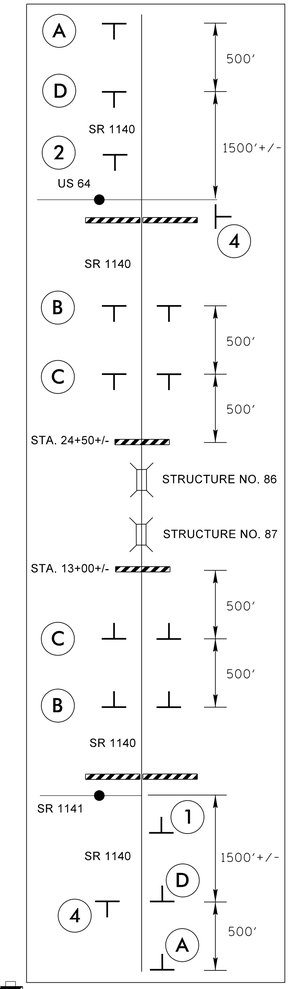

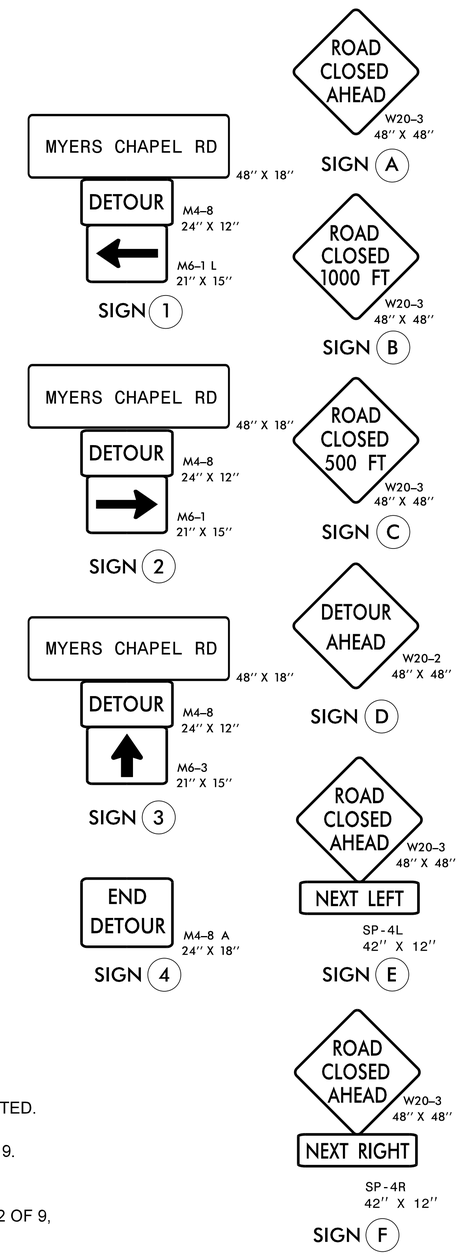

PHASING

STEP 1: - INSTALL OFF-SITE DETOUR ROUTE SIGN ASSEMBLIES FOR THE CLOSING OF SR 1140 (MYERS CHAPEL ROAD, -L-).

- USING ROADWAY STANDARD DRAWING NO. 1101.03, SHEETS 1 OF 9 AND 2 OF 9, CLOSE SR 1140 (MYERS CHAPEL ROAD, -L-) TO THRU TRAFFIC.

STEP 2: - REMOVE THE EXISTING STRUCTURES AND CONSTRUCT THE PROPOSED STRUCTURES AND ROADWAY FROM STATION 13+00+/- -L- TO STATION 24+50 +/- -L- (SEE ROADWAY PLANS).

STEP 3: - REMOVE ALL TRAFFIC CONTROL DEVICES, SIGNING AND DETOUR ROUTE SIGNING.

STEP 4: - OPEN TO FINAL TRAFFIC PATTERN.

NOTES:

- ALL DETOUR SIGN LOCATIONS ARE APPROXIMATE.
- ALL DETOUR SIGNS ARE BLACK ON ORANGE UNLESS OTHERWISE NOTED.
- TRAFFIC CONTROL DEVICES (A) THROUGH (G) SHALL BE INSTALLED ACCORDING TO ROADWAY STANDARD DRAWING 1101.03, SHEET 1 OF 9.
- TRAFFIC CONTROL DEVICES (1) THROUGH (4) SHALL BE INSTALLED AS PER ENGINEER'S INSTRUCTIONS, AND AS SHOWN HEREON.

* SEE ROADWAY STANDARD DRAWING NO. 1101.03, SHEET 1 OF 9 AND 2 OF 9, FOR ADDITIONAL WORK ZONE SIGNS.

V&M
Vaughn & Melton
Consulting Engineers
Asheville, North Carolina
828-253-2796
Tri-Cities, TN 423-467-8401
Knoxville, TN 865-546-5800
Spartanburg, SC 864-574-4775
Charleston, SC 843-974-5650
Middlesboro, KY 606-248-6600
Atlanta, GA 770-627-3509
Charlotte, NC 704-357-0488
Boone, NC 828-355-9933
Copyright © 2006 Vaughn & Melton, Inc. All Rights Reserved

APPROVED: DocuSigned by: Lloyd DeWayne Brown DATE: 11/4/2016

SEAL

NORTH CAROLINA PROFESSIONAL SEAL 20119 ENGINEER LLOYD D. BROWN

DIVISION OF HIGHWAYS · STATE OF NORTH CAROLINA · DEPARTMENT OF TRANSPORTATION · WORK ZONE TRAFFIC CONTROL

DOCUMENT NOT CONSIDERED FINAL UNLESS ALL SIGNATURES COMPLETED

TEMPORARY TRAFFIC CONTROL DETAIL, PHASING NOTES, OFF-SITE DETOUR SIGNING AND ROAD CLOSURE

11/4/2016
S:\Transportation\3236-01MTC 14SP.20221.1Clay 86\Traffic\TrafficControl\TCP\BD-5li4_086_087_tmp-3.dgn
User:cjmarrell

DocuSign Envelope ID: 802A9456-4450-4837-B91F-6CECCC31086F

PROJ. REFERENCE NO.	SHEET NO.
14SP.20221.1/14SP.20221.2	PMP-1

PAVEMENT MARKING PLAN

ROADWAY STANDARD DRAWING

THE FOLLOWING ROADWAY STANDARDS AS APPEAR IN "ROADWAY STANDARD DRAWINGS" - PROJECT SERVICES UNIT - N.C. DEPARTMENT OF TRANSPORTATION - RALEIGH, N.C. DATED JANUARY 2012 ARE APPLICABLE TO THIS PROJECT AND BY REFERENCE HEREBY ARE CONSIDERED A PART OF THESE PLANS:

STD. NO.	TITLE
1205.01	PAVEMENT MARKINGS - LINE TYPES AND OFFSETS
1205.02	PAVEMENT MARKINGS - TWO LANE & MULTILANE ROADWAYS
1205.12	PAVEMENT MARKINGS - BRIDGES
1261.01	GUARDRAIL AND BARRIER DELINEATORS - INSTALLATION SPACING
1261.02	GUARDRAIL AND BARRIER DELINEATORS - TYPES & MOUNTING
1262.01	GUARDRAIL END DELINEATION

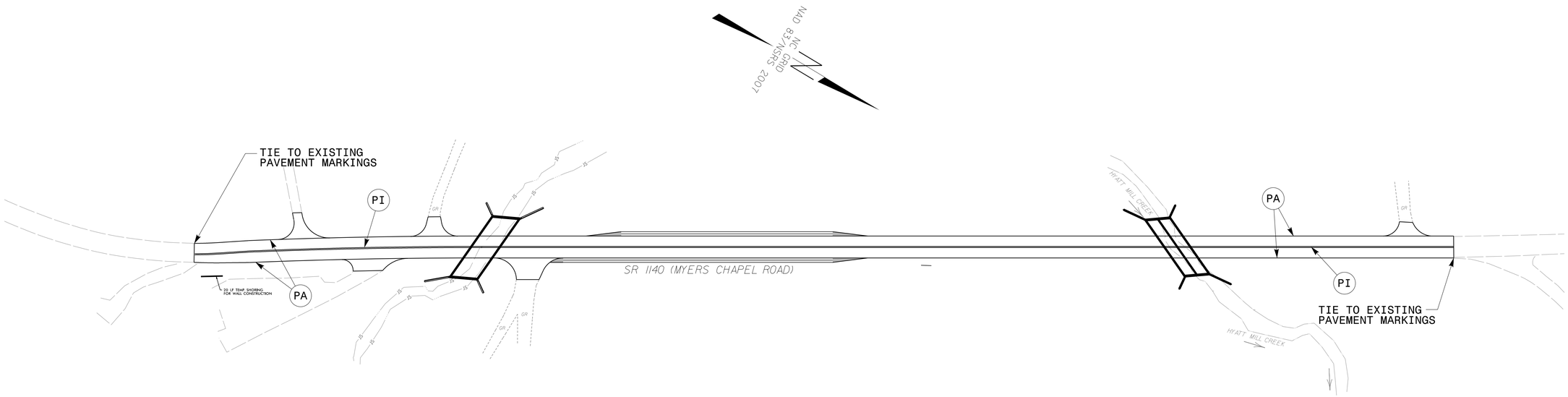

FINAL PAVEMENT MARKING SCHEDULE

SYMBOL	DESCRIPTION	PROJECT	QUANTITY BREAKDOWN	PAY ITEM	TOTAL QUANTITY
			PAVEMENT MARKING LINES		
PA	WHITE SOLID EDGE LINE	086	1300 FT	PAINT (4")	2600 FT
PI	YELLOW DOUBLE CENTER LINE	086	1300 FT	PAINT (4")	2600 FT
PA	WHITE SOLID EDGE LINE	087	1000 FT	PAINT (4")	2000 FT
PI	YELLOW DOUBLE CENTER LINE	087	1000 FT	PAINT (4")	2000 FT

SCALE: 1" = 50'

GENERAL NOTES

THE FOLLOWING GENERAL NOTES APPLY AT ALL TIMES FOR THE DURATION OF THE CONSTRUCTION PROJECT, EXCEPT WHEN OTHERWISE NOTED IN THE PLAN, OR DIRECTED BY THE ENGINEER.

A.) INSTALL PAVEMENT MARKINGS ON THE FINAL SURFACE

ROAD NAME:	MARKING
SR 1140 (MYERS CHAPEL ROAD)	PAINT

B.) TIE PROPOSED PAVEMENT MARKING LINES TO EXISTING PAVEMENT MARKING LINES.

C.) REMOVE/REPLACE ANY CONFLICTING/DAMAGED PAVEMENT MARKINGS AND MARKERS.

V&M
Vaughn & Melton
Consulting Engineers
Asheville, North Carolina
828-253-2796
Charlotte, NC 704-357-0488
Boone, NC 828-355-9933
Tri-Cities, TN 423-467-8401
Knoxville, TN 865-546-5800
Spartanburg, SC 864-574-4775
Charleston, SC 843-974-5650
Middlesboro, KY 606-248-6600
Atlanta, GA 770-627-3509
Copyright © 2006 Vaughn & Melton, Inc. All Rights Reserved

APPROVED: DocuSigned by: Lloyd D. Wayne Brown DATE: 11/4/2016

SEAL

NORTH CAROLINA PROFESSIONAL SEAL 20119 ENGINEER LLOYD D. BROWN

DIVISION OF HIGHWAYS · STATE OF NORTH CAROLINA · DEPARTMENT OF TRANSPORTATION · WORK ZONE TRAFFIC CONTROL

DOCUMENT NOT CONSIDERED FINAL UNLESS ALL SIGNATURES COMPLETED

PAVEMENT MARKING PLAN

11/4/2016
S:\Transportation\3j236-01MTC 14SP.20221.1Clay 86\Traffic\TrafficControl\TCP\BD-5114_086_087_PMP-1.dgn
User:cjmorrell

PROJECT REFERENCE NO.	SHEET NO.
14SP.20201.2	EC-1/CONS-4

EROSION CONTROL PLAN

PHASE 1

THESE EROSION AND SEDIMENT CONTROL PLANS COMPLY WITH THE REGULATIONS SET FORTH BY THE NCG-010000 GENERAL CONSTRUCTION PERMIT EFFECTIVE AUGUST 3, 2011 ISSUED BY THE NORTH CAROLINA DEPARTMENT OF ENVIRONMENT AND NATURAL RESOURCES DIVISION OF WATER QUALITY.

CONSTRUCTION SEQUENCE:
EROSION CONTROL MEASURES SHALL BE INSTALLED PRIOR TO CLEARING AND GRUBBING.

PHASE 1: PLACE IMPERVIOUS DIKE IN STREAM TO CONSTRUCT THE NORTHERN BARREL OF REINFORCED CONCRETE BOX CULVERT WITH SILLS AND THE NORTH SIDE WINGWALLS.

ALL PHASES: IMPERVIOUS DIKE SHALL BE INSTALLED PRIOR TO BRIDGE REMOVAL UPSTREAM AND DOWNSTREAM OF CONSTRUCTION TO CONTAIN THE WORK SITE AND SHALL BE DEWATERED WITH SPECIAL STILLING BASINS. PLACEMENT SHALL BE APPROVED BY THE ENGINEER. EROSION CONTROL MEASURES SHALL NOT BE REMOVED UNTIL SITE IS STABILIZED.

Vaughn & Melton
Consulting Engineers
Asheville, North Carolina 828-253-2796
Charlotte, North Carolina 704-357-0488
Tri-Cities, Tennessee 423-467-840
Knoxville, Tennessee 865-546-5600
Middlesboro, Kentucky 606-248-6600
Spartanburg, South Carolina 864-574-4775

Copyright 2013 Vaughn & Melton, Inc.

Place Matting for Erosion Control on Slope as Work Allows.

CLEARING AND GRUBBING EROSION CONTROL FOR CONSTRUCTION SHEET 4

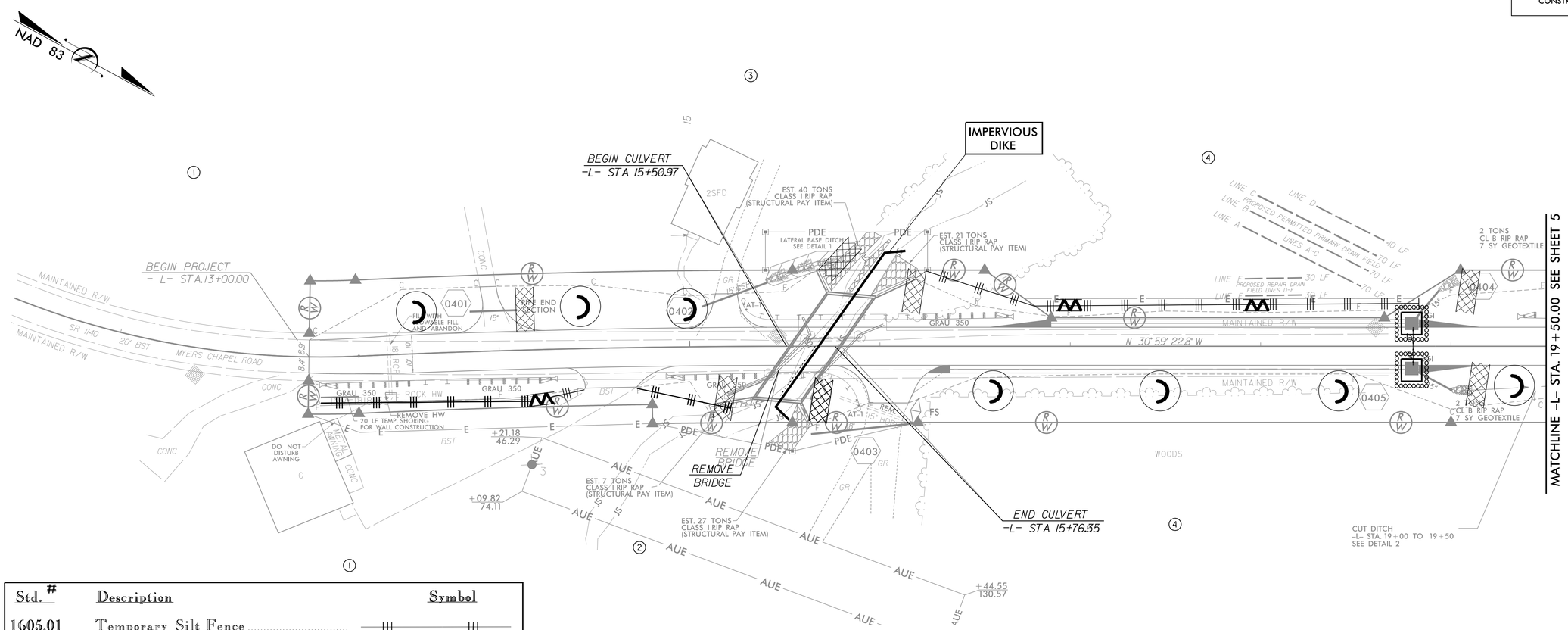

Std. #	Description	Symbol
1605.01	Temporary Silt Fence	
1606.01	Special Sediment Control Fence	
1632.03	Rock Inlet Sediment TrapType C	
1633.01	Temporary Rock Silt Check Type-A	
SP	Wattle / Coir Fiber Wattle	-EW-
	with Polyacrylamide (PAM)	

NOTES: ANY DEVIATION FROM OPTIONS GIVEN WILL REQUIRE PRIOR APPROVAL BY ENGINEER.

ADDITIONAL EROSION CONTROL DEVICES MAY NEED TO BE INSTALLED AS DIRECTED BY THE ENGINEER.

ROADSIDE ENVIRONMENTAL UNIT
DEPARTMENT OF TRANSPORTATION
DIVISION OF HIGHWAYS
RALEIGH, N.C.

2012 STANDARD SPECIFICATIONS

Level III-A: Designer of Erosion and Sediment Control Plans

MICHAEL CLARK
Date Issued: June 5, 2013
Date Expires: December 31, 2016
Certification Number: 3376

2012 STANDARD DRAWINGS

1604.01	Railroad Erosion Control Detail	1632.01	Rock Inlet Sediment Trap Type A
1605.01	Temporary Silt Fence	1632.02	Rock Inlet Sediment Trap Type B
1606.01	Special Sediment Control Fence	1632.03	Rock Inlet Sediment Trap Type C
1607.01	Gravel Construction Entrance	1633.01	Temporary Rock Silt Check Type A
1622.01	Temporary Berms and Slope Drains	1633.02	Temporary Rock Silt Check Type B
1630.01	Riser Basin	1634.01	Temporary Rock Sediment Dam Type A
1630.02	Silt Basin Type B	1634.02	Temporary Rock Sediment Dam Type B
1630.03	Temporary Silt Ditch	1635.01	Rock Pipe Inlet Sediment Trap Type A
1630.04	Stilling Basin	1635.02	Rock Pipe Inlet Sediment Trap Type B
1630.05	Temporary Diversion	1640.01	Coir Fiber Baffle
1630.06	Special Stilling Basin	1645.01	Temporary Stream Crossing
1631.01	Matting Installation		

PROJECT NO. 14SP.20201.2
COUNTY CLAY
STATION: 15+50.97 -L-
REPLACES BRIDGE NO. 87

STATE OF NORTH CAROLINA
DEPARTMENT OF TRANSPORTATION
RALEIGH

STRUCTURE #87 ON SR 1140 OVER HYATT MILL CREEK

REVISIONS						SHEET NO.
NO.	BY	DATE	NO.	BY	DATE	EC-1
1			3			TOTAL SHEETS
2			4			

PROJECT REFERENCE NO.	SHEET NO.
14SP.20201.2	EC-2/CONS-4

EROSION CONTROL PLAN

PHASE 2

THESE EROSION AND SEDIMENT CONTROL PLANS COMPLY WITH THE REGULATIONS SET FORTH BY THE NCG-010000 GENERAL CONSTRUCTION PERMIT EFFECTIVE AUGUST 3, 2011 ISSUED BY THE NORTH CAROLINA DEPARTMENT OF ENVIRONMENT AND NATURAL RESOURCES DIVISION OF WATER QUALITY.

CONSTRUCTION SEQUENCE:
EROSION CONTROL MEASURES SHALL BE INSTALLED PRIOR TO CLEARING AND GRUBBING.

PHASE 2: PLACE IMPERVIOUS DIKE IN STREAM TO FORCE STREAM THROUGH THE NEWLY CONSTRUCTED NORTHERN BARREL AND PLACE RIP RAP AS AS SHOWN BELOW.

ALL PHASES: IMPERVIOUS DIKE SHALL BE INSTALLED PRIOR TO BRIDGE REMOVAL UPSTREAM AND DOWNSTREAM OF CONSTRUCTION TO CONTAIN THE WORK SITE AND SHALL BE DEWATERED WITH SPECIAL STILLING BASINS. PLACEMENT SHALL BE APPROVED BY THE ENGINEER. EROSION CONTROL MEASURES SHALL NOT BE REMOVED UNTIL SITE IS STABILIZED.

Vaughn & Melton
Consulting Engineers
Asheville, North Carolina 828-253-2796
Charlotte, North Carolina 704-357-0488
Tri-Cities, Tennessee 423-467-840
Knoxville, Tennessee 865-546-6600
Middlesboro, Kentucky 606-248-6600
Spartanburg, South Carolina 864-574-4775

Copyright 2013 Vaughn & Melton, Inc.

Place Matting for Erosion Control on Slope as Work Allows.

CLEARING AND GRUBBING EROSION CONTROL FOR CONSTRUCTION SHEET 4

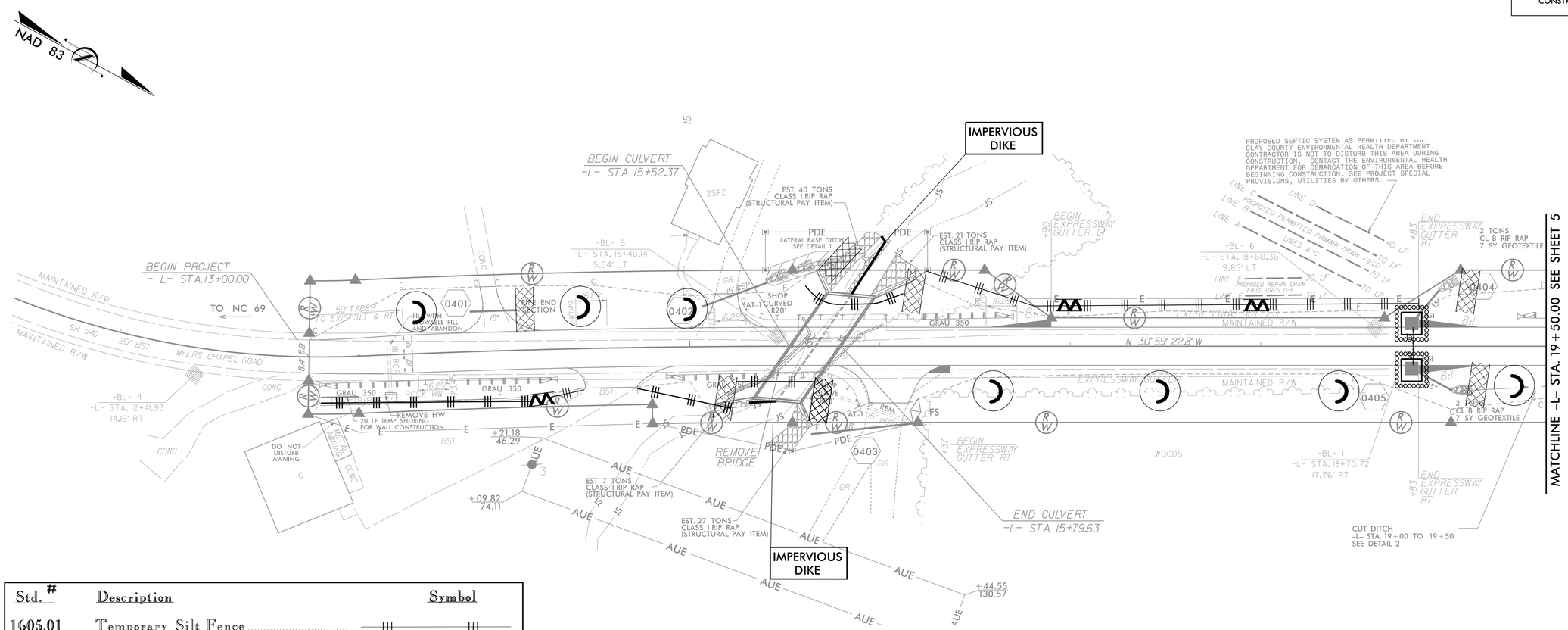

Std. #	Description	Symbol
1605.01	Temporary Silt Fence	
1606.01	Special Sediment Control Fence	
1632.03	Rock Inlet Sediment TrapType C	
1633.01	Temporary Rock Silt Check Type-A	
SP	Wattle / Coir Fiber Wattle	–EW–
	with Polyacrylamide (PAM)	

NOTES: ANY DEVIATION FROM OPTIONS GIVEN WILL REQUIRE PRIOR APPROVAL BY ENGINEER.

ADDITIONAL EROSION CONTROL DEVICES MAY NEED TO BE INSTALLED AS DIRECTED BY THE ENGINEER.

ROADSIDE ENVIRONMENTAL UNIT
DEPARTMENT OF TRANSPORTATION
DIVISION OF HIGHWAYS
RALEIGH, N.C.

2012 STANDARD SPECIFICATIONS

Level III–A: Designer of Erosion and Sediment Control Plans

MICHAEL CLARK
Date Issued: June 5, 2013
Date Expires: December 31, 2016
Certification Number: 3376

2012 STANDARD DRAWINGS

1604.01	Railroad Erosion Control Detail	1632.01	Rock Inlet Sediment Trap Type A
1605.01	Temporary Silt Fence	1632.02	Rock Inlet Sediment Trap Type B
1606.01	Special Sediment Control Fence	1632.03	Rock Inlet Sediment Trap Type C
1607.01	Gravel Construction Entrance	1633.01	Temporary Rock Silt Check Type A
1622.01	Temporary Berms and Slope Drains	1633.02	Temporary Rock Silt Check Type B
1630.01	Riser Basin	1634.01	Temporary Rock Sediment Dam Type A
1630.02	Silt Basin Type B	1634.02	Temporary Rock Sediment Dam Type B
1630.03	Temporary Silt Ditch	1635.01	Rock Pipe Inlet Sediment Trap Type A
1630.04	Stilling Basin	1635.02	Rock Pipe Inlet Sediment Trap Type B
1630.05	Temporary Diversion	1640.01	Coir Fiber Baffle
1630.06	Special Stilling Basin	1645.01	Temporary Stream Crossing
1631.01	Matting Installation		

PROJECT NO. 14SP.20201.2
COUNTY CLAY
STATION: 15+50.97 -L-
REPLACES BRIDGE NO. 87

STATE OF NORTH CAROLINA
DEPARTMENT OF TRANSPORTATION
RALEIGH

STRUCTURE #87 ON SR 1140 OVER HYATT MILL CREEK

REVISIONS						SHEET NO.
NO.	BY	DATE	NO.	BY	DATE	EC-2
1			3			TOTAL SHEETS
2			4			

PROJECT REFERENCE NO.	SHEET NO.
14SP.20201.1	EC-3/CONS-5

EROSION CONTROL PLAN

PHASE 1

Vaughn & Melton
Consulting Engineers
Asheville, North Carolina 828-253-2796
Charlotte, North Carolina 704-357-0488
Tri-Cities, Tennessee 423-467-8410
Knoxville, Tennessee 865-546-5600
Middlesboro, Kentucky 606-248-6600
Spartanburg, South Carolina 864-574-4775

Copyright 2013 Vaughn & Melton, Inc.

CONSTRUCTION SEQUENCE:
EROSION CONTROL MEASURES SHALL BE INSTALLED PRIOR TO CLEARING AND GRUBBING.

PHASE 1: PLACE IMPERVIOUS DIKE IN STREAM TO CONSTRUCT THE NORTHERN BARREL OF REINFORCED CONCRETE BOX CULVERT WITH SILLS, RIP RAP AND THE NORTH SIDE WINGWALLS.

ALL PHASES: IMPERVIOUS DIKE SHALL BE INSTALLED PRIOR TO BRIDGE REMOVAL UPSTREAM AND DOWNSTREAM OF CONSTRUCTION TO CONTAIN THE WORK SITE AND SHALL BE DEWATERED WITH SPECIAL STILLING BASINS. PLACEMENT SHALL BE APPROVED BY THE ENGINEER. EROSION CONTROL MEASURES SHALL NOT BE REMOVED UNTIL SITE IS STABILIZED.

Place Matting for Erosion Control on Slope as Work Allows.

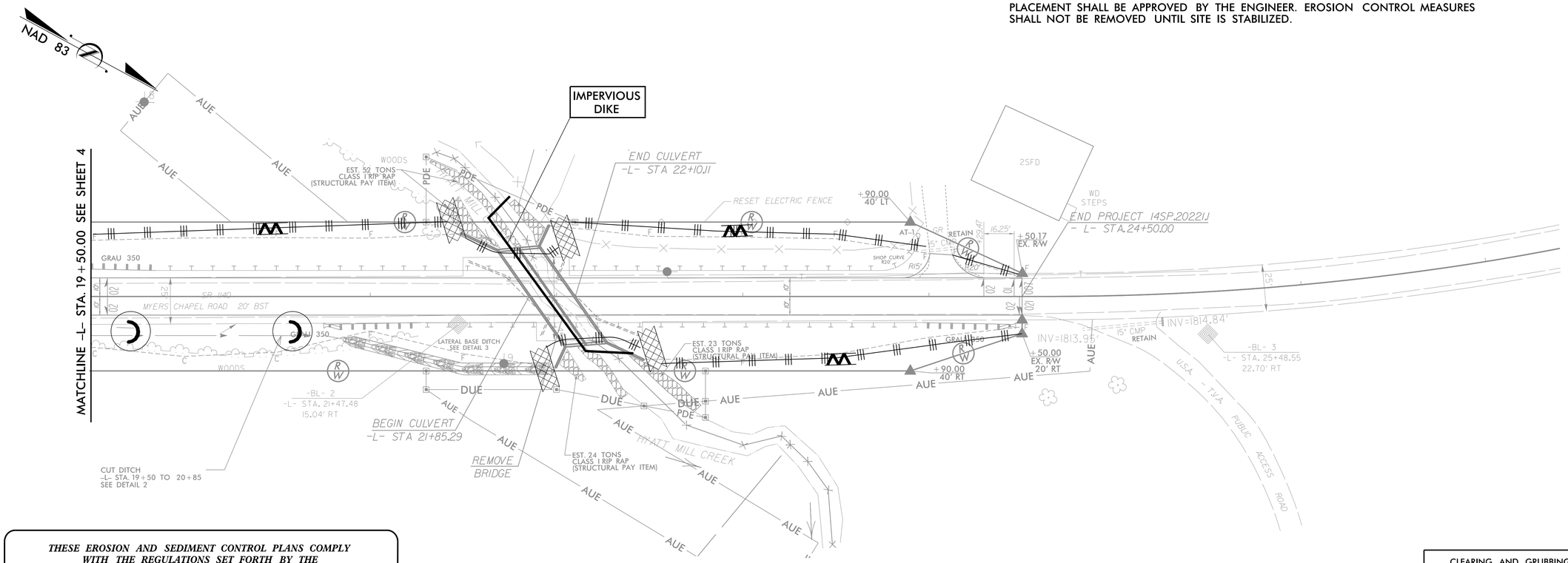

CLEARING AND GRUBBING EROSION CONTROL FOR CONSTRUCTION SHEET 5

THESE EROSION AND SEDIMENT CONTROL PLANS COMPLY WITH THE REGULATIONS SET FORTH BY THE NCG-010000 GENERAL CONSTRUCTION PERMIT EFFECTIVE AUGUST 3, 2011 ISSUED BY THE NORTH CAROLINA DEPARTMENT OF ENVIRONMENT AND NATURAL RESOURCES DIVISION OF WATER QUALITY.

Std. #	Description	Symbol
1605.01	Temporary Silt Fence	
1606.01	Special Sediment Control Fence	
1633.01	Temporary Rock Silt Check Type-A	
SP	Wattle / Coir Fiber Wattle	-EW-
	with Polyacrylamide (PAM)	

NOTES: ANY DEVIATION FROM OPTIONS GIVEN WILL REQUIRE PRIOR APPROVAL BY ENGINEER.

ADDITIONAL EROSION CONTROL DEVICES MAY NEED TO BE INSTALLED AS DIRECTED BY THE ENGINEER.

ROADSIDE ENVIRONMENTAL UNIT
DEPARTMENT OF TRANSPORTATION
DIVISION OF HIGHWAYS
RALEIGH, N.C.

2012 STANDARD SPECIFICATIONS

Level III: Designer of Erosion and Sediment Control Plans

MICHAEL CLARK
Date Issued: June 5, 2013
Date Expires: December 31, 2016
Certification Number: 3376

2012 STANDARD DRAWINGS

1604.01	Railroad Erosion Control Detail	1632.01	Rock Inlet Sediment Trap Type A
1605.01	Temporary Silt Fence	1632.02	Rock Inlet Sediment Trap Type B
1606.01	Special Sediment Control Fence	1632.03	Rock Inlet Sediment Trap Type C
1607.01	Gravel Construction Entrance	1633.01	Temporary Rock Silt Check Type A
1622.01	Temporary Berms and Slope Drains	1633.02	Temporary Rock Silt Check Type B
1630.01	Riser Basin	1634.01	Temporary Rock Sediment Dam Type A
1630.02	Silt Basin Type B	1634.02	Temporary Rock Sediment Dam Type B
1630.03	Temporary Silt Ditch	1635.01	Rock Pipe Inlet Sediment Trap Type A
1630.04	Stilling Basin	1635.02	Rock Pipe Inlet Sediment Trap Type B
1630.05	Temporary Diversion	1640.01	Coir Fiber Baffle
1630.06	Special Stilling Basin	1645.01	Temporary Stream Crossing
1631.01	Matting Installation		

PROJECT NO. 14SP.20201.1
COUNTY CLAY
STATION: 21+82.30 -L-
REPLACES BRIDGE NO. 86

STATE OF NORTH CAROLINA
DEPARTMENT OF TRANSPORTATION
RALEIGH

STRUCTURE #86 ON SR 1140
OVER HYATT MILL CREEK

REVISIONS						SHEET NO.
NO.	BY	DATE	NO.	BY	DATE	EC-3
1			3			TOTAL SHEETS
2			4			

PROJECT REFERENCE NO.	SHEET NO.
14SP.20201.1	EC-4/CONS-5

EROSION CONTROL PLAN

PHASE 2

Vaughn & Melton
Consulting Engineers
Asheville, North Carolina 828-253-2796
Charlotte, North Carolina 704-357-0488
Tri-Cities, Tennessee 423-467-8410
Knoxville, Tennessee 865-546-5600
Middlesboro, Kentucky 606-248-6600
Spartanburg, South Carolina 864-574-4775

Copyright 2013 Vaughn & Melton, Inc.

Place Matting for Erosion Control on Slope as Work Allows.

CONSTRUCTION SEQUENCE:
EROSION CONTROL MEASURES SHALL BE INSTALLED PRIOR TO CLEARING AND GRUBBING.

PHASE 2: PLACE IMPERVIOUS DIKE IN STREAM TO FORCE STREAM THROUGH THE NEWLY CONSTRUCTED NORTHERN BARREL AND PLACE RIP RAP AS AS SHOWN BELOW.

ALL PHASES: IMPERVIOUS DIKE SHALL BE INSTALLED PRIOR TO BRIDGE REMOVAL UPSTREAM AND DOWNSTREAM OF CONSTRUCTION TO CONTAIN THE WORK SITE AND SHALL BE DEWATERED WITH SPECIAL STILLING BASINS. PLACEMENT SHALL BE APPROVED BY THE ENGINEER. EROSION CONTROL MEASURES SHALL NOT BE REMOVED UNTIL SITE IS STABILIZED.

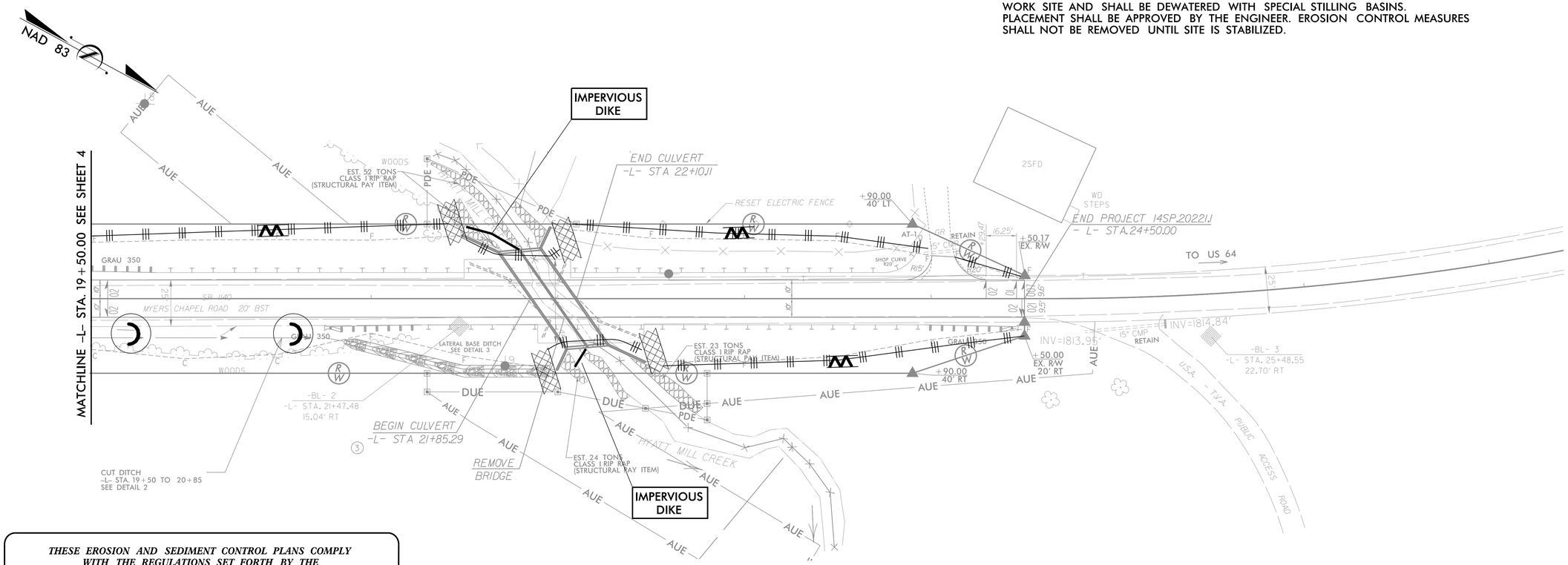

THESE EROSION AND SEDIMENT CONTROL PLANS COMPLY WITH THE REGULATIONS SET FORTH BY THE NCG-010000 GENERAL CONSTRUCTION PERMIT EFFECTIVE AUGUST 3, 2011 ISSUED BY THE NORTH CAROLINA DEPARTMENT OF ENVIRONMENT AND NATURAL RESOURCES DIVISION OF WATER QUALITY.

Std. #	Description	Symbol
1605.01	Temporary Silt Fence	
1606.01	Special Sediment Control Fence	
1633.01	Temporary Rock Silt Check Type-A	
SP	Wattle / Coir Fiber Wattle	-EW-
	with Polyacrylamide (PAM)	

NOTES: ANY DEVIATION FROM OPTIONS GIVEN WILL REQUIRE PRIOR APPROVAL BY ENGINEER.

ADDITIONAL EROSION CONTROL DEVICES MAY NEED TO BE INSTALLED AS DIRECTED BY THE ENGINEER.

ROADSIDE ENVIRONMENTAL UNIT
DEPARTMENT OF TRANSPORTATION
DIVISION OF HIGHWAYS
RALEIGH, N.C.

2012 STANDARD SPECIFICATIONS

Level III: Designer of Erosion and Sediment Control Plans

MICHAEL CLARK
Date Issued: June 5, 2013
Date Expires: December 31, 2016
Certification Number: 3376

2012 STANDARD DRAWINGS

1604.01	Railroad Erosion Control Detail	1632.01	Rock Inlet Sediment Trap Type A
1605.01	Temporary Silt Fence	1632.02	Rock Inlet Sediment Trap Type B
1606.01	Special Sediment Control Fence	1632.03	Rock Inlet Sediment Trap Type C
1607.01	Gravel Construction Entrance	1633.01	Temporary Rock Silt Check Type A
1622.01	Temporary Berms and Slope Drains	1633.02	Temporary Rock Silt Check Type B
1630.01	Riser Basin	1634.01	Temporary Rock Sediment Dam Type A
1630.02	Silt Basin Type B	1634.02	Temporary Rock Sediment Dam Type B
1630.03	Temporary Silt Ditch	1635.01	Rock Pipe Inlet Sediment Trap Type A
1630.04	Stilling Basin	1635.02	Rock Pipe Inlet Sediment Trap Type B
1630.05	Temporary Diversion	1640.01	Coir Fiber Baffle
1630.06	Special Stilling Basin	1645.01	Temporary Stream Crossing
1631.01	Matting Installation		

PROJECT NO. 14SP.20201.1
COUNTY CLAY
STATION: 21+82.30 -L-
REPLACES BRIDGE NO. 86

STATE OF NORTH CAROLINA
DEPARTMENT OF TRANSPORTATION
RALEIGH

STRUCTURE #86 ON SR 1140
OVER HYATT MILL CREEK

REVISIONS						SHEET NO.
NO.	BY	DATE	NO.	BY	DATE	EC-4
1			3			TOTAL SHEETS
2			4			

STATE OF NORTH CAROLINA
DIVISION OF HIGHWAYS

SOIL STABILIZATION TIMEFRAMES

SITE DESCRIPTION	STABILIZATION TIME	TIMEFRAME EXCEPTIONS
PERIMETER DIKES, SWALES, DITCHES, AND SLOPES	7 DAYS	NONE
HIGH QUALITY WATER (HQW) ZONES	7 DAYS	NONE
SLOPES STEEPER THAN 3:1	7 DAYS	IF SLOPES ARE 10' OR LESS IN LENGTH AND ARE NOT STEEPER THAN 2:1, 14 DAYS ARE ALLOWED.
SLOPES 3:1 OR FLATTER	14 DAYS	7 DAYS FOR SLOPES GREATER THAN 50' IN LENGTH.
ALL OTHER AREAS WITH SLOPES FLATTER THAN 4:1	14 DAYS	NONE, EXCEPT FOR PERIMETERS AND HQW ZONES.

PROJECT REFERENCE NO.	SHEET NO.
14SP.20201.1/ 14SP.20201.2	EC-5A

DIVISION OF HIGHWAYS
STATE OF NORTH CAROLINA

SOIL STABILIZATION SUMMARY SHEET

MATTING FOR EROSION CONTROL

CONST SHEET NO.	LINE	FROM STATION	TO STATION	SIDE	ESTIMATE (SY)
4	L	13+00	15+20	LT	310
4	L	16+50	19+50	RT	420
				SUBTOTAL	730
MISCELLANEOUS MATTING TO BE INSTALLED AS DIRECTED BY THE ENGINEER					**1280
				TOTAL	2010
				SAY	2020
5	L	19+50	21+00	RT	210
				SUBTOTAL	210
MISCELLANEOUS MATTING TO BE INSTALLED AS DIRECTED BY THE ENGINEER					**1720
				TOTAL	1930
				SAY	1930
	**EROSION CONTROL MATTING TO BE PLACED ON ALL				
	DISTURBED SLOPES				

PERMANENT SOIL REINFORCEMENT MAT

CONST SHEET NO.	LINE	FROM STATION	TO STATION	SIDE	ESTIMATE (SY)

PROJECT REFERENCE NO.	SHEET NO.
14SP.2020111 14SP.2020112	EC-6

WATTLE WITH POLYACRYLAMIDE DETAIL

WATTLES WITH POLYACRYLAMIDE (PAM):

Description

Wattles are tubular products consisting of excelsior fibers encased in synthetic netting. Wattles are used on slopes or channels to intercept runoff and act as a velocity break. Wattles are to be placed at locations shown on the plans or as directed. Installation shall follow the detail provided in the plans and as directed. Work includes furnishing materials, installation of wattles, matting installation, PAM application, and removing wattles.

Materials

Wattle shall meet the following specifications:

100% Curled Wood(Excelsior) Fibers
Minimum Diameter – 12 in.
Minimum Density – 2.6 lb/ft3 +/- 10%
Net Material – Synthetic
Net Openings – 1 in. x 1 in.
Net Configuration – Totally Encased
Minimum Weight – 20 lb. +/- 10% per 10 ft. length

Anchors: Stakes shall be used as anchors.

Wooden Stakes:

Provide hardwood stakes a minimum of 2-ft. long with a 2 in. x 2 in. nominal square cross section. One end of the stake must be sharpened or beveled to facilitate driving down into the underlying soil.

Matting shall meet the requirements of section 1060-8 of the Standard Specifications, or shall meet specifications provided elsewhere in this contract.

Provide staples made of 0.125" diameter new steel wire formed into a u shape not less than 12" in length with a throat of 1" in width.

Polyacrylamide (PAM) shall be applied in powder form and shall be anionic or neutrally charged. Soil samples shall be obtained in areas where the wattles will be placed, and from offsite material used to construct roadway, and analyzed for the appropriate PAM flocculant to be utilized with each wattle.

Construction Methods

Wattles shall be secured to the soil by wire staples approximately every 1 linear foot and at the end of each section of wattle. A minimum of 4 stakes shall be installed on the downstream side of the wattle with a maximum spacing of 2 linear feet along the wattle, and according to the detail. Install a minimum of 2 stakes on the upstream side of the wattle according to the detail provided in the plans. Stakes shall be driven into the ground a minimum of 10 in. with no more than 2 in. projecting from the top of the wattle. Drive stakes at an angle according to the detail provided in the plans.

Install wattles to the top of the ditch according to the detail provided in the plans. Overlap adjoining sections of wattles a minimum of 6 in.

Installation of matting shall be in accordance with the detail provided in the plans, and in accordance with section 1631-3(B) of the Standard Specifications, or in accordance with specifications provided elsewhere in this contract.

Apply PAM over the lower center portion of the wattle where the water is going to flow over at a rate of 3.5 ounces per wattle, and at a rate of 1 ounce on matting each side of wattle. PAM applications shall be done during construction activities after every rainfall event that is equal to or exceeds 0.50 in.

The Contractor shall maintain the wattles until the project is accepted or until the wattles are removed, and shall remove and dispose of silt accumulations at the wattles when so directed in accordance with the requirements of Section 1630 of the Standard Specifications.

The quantity of wattle(s), wooden stakes, staples, matting and PAM as measured above will be paid for at contract price for "Lump Sum for Erosion Control". Such price and payment will be full compensation for all work covered by this provision, including but not limted to, furnishing all materials, placing and maintaining the wattle(s), and removal and disposal of silt accumulations and wattle.

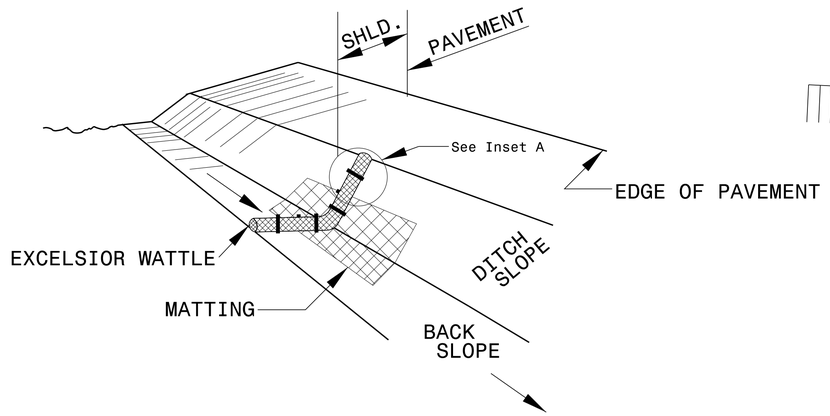

ISOMETRIC VIEW

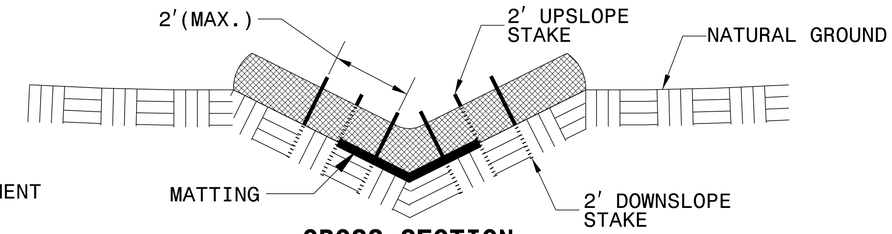

CROSS SECTION VEE DITCH

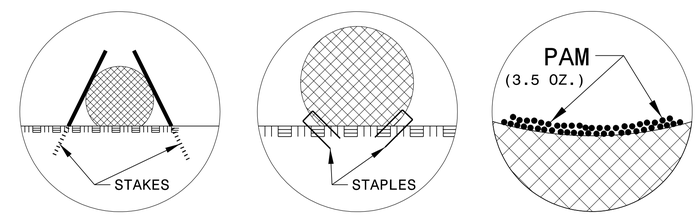

INSET A INSET B INSET C

NOTES:

USE MINIMUM 12 IN. DIAMETER EXCELSIOR WATTLE.

USE 2 FT. WOODEN STAKES WITH A 2 IN. BY 2 IN. CROSS SECTION.

ONLY INSTALL WATTLE(S) TO A HEIGHT IN DITCH SO FLOW WILL NOT WASH AROUND WATTLE AND SCOUR DITCH SLOPES AND AS DIRECTED.

INSTALL A MINIMUM OF 2 UPSLOPE STAKES AND 4 DOWNSLOPE STAKES AT AN ANGLE TO WEDGE WATTLE TO BOTTOM OF DITCH.

PROVIDE STAPLES MADE OF 0.125 IN. DIAMETER STEEL WIRE FORMED INTO A U SHAPE NOT LESS THAN 12" IN LENGTH.

INSTALL STAPLES APPROXIMATELY EVERY 1 LINEAR FOOT ON BOTH SIDES OF WATTLE AND AT EACH END TO SECURE IT TO THE SOIL.

INSTALL MATTING IN ACCORDANCE WITH SECTION 1631 OF THE STANDARD SPECIFICATIONS.

PRIOR TO POLYACRYLAMIDE (PAM) APPLICATION, OBTAIN A SOIL SAMPLE FROM PROJECT LOCATION, AND FROM OFFSITE MATERIAL, AND ANALYZE FOR APPROPRIATE PAM FLOCCULANT TO BE APPLIED TO EACH WATTLE.

INITIALLY APPLY 2 OUNCES OF ANIONIC OR NEUTRALLY CHARGED POLYACRYLAMIDE (PAM) OVER WATTLE WHERE WATER WILL FLOW AND 1 OUNCE OF PAM ON MATTING ON EACH SIDE OF WATTLE. REAPPLY PAM AFTER EVERY RAINFALL EVENT THAT IS EQUAL TO OR EXCEEDS 0.50 IN.

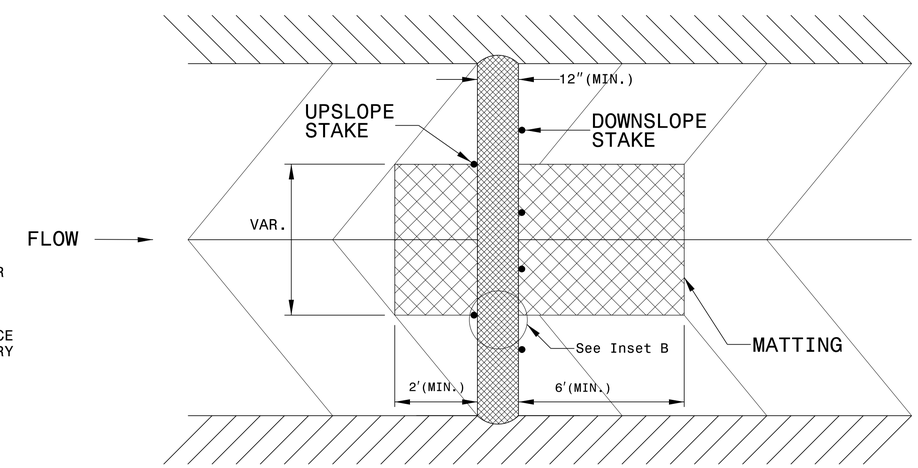

TOP VIEW

8/20/14

PROJECT: 14SP.20221.1 / 14SP.20221.2

CONTRACT: DN00124 & DN00125

V&M PROJECT #31236-01 & #31236-02
TRANSPORTATION\31236-01 & 31236-02\UTILITIES CLAY 86 & 87\UO-1.DGN

STATE OF NORTH CAROLINA
DIVISION OF HIGHWAYS

T.I.P. NO.	SHEET NO.
14SP.20221.1 / 14SP.20221.2	UO–1

UTILITIES BY OTHERS
CLAY COUNTY

V&M
Vaughn & Melton
Consulting Engineers
Asheville, North Carolina
828·253·2796
Tri-Cities, TN 423·467·8401
Knoxville, TN 865·546·5800
Spartanburg, SC 864·574·4775
Charleston, SC 843·974·5650
Middlesboro, KY 606·248·6600
Atlanta, GA 770·627·3509
Charlotte, NC 704·357·0488
Boone, NC 828·355·9933

Copyright © 2006 Vaughn & Melton, Inc. All Rights Reserved

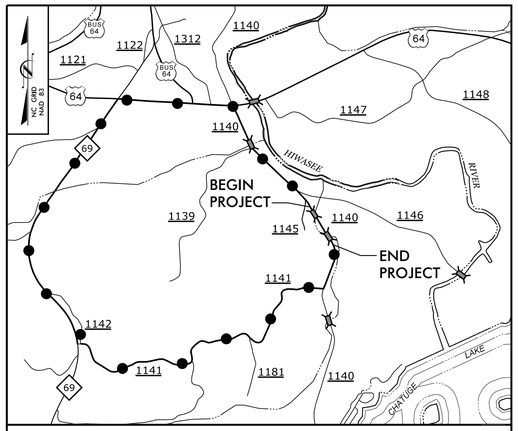

VICINITY MAP

DETOUR ROUTE

LOCATION: BRIDGE NOS. 86 & 87 OVER HYATT MILL CREEK ON SR 1140 (MYERS CHAPEL ROAD)

TYPE OF WORK: AERIAL POWER, FIBER OPTIC, TELEPHONE AND BURIED TELEPHONE

4

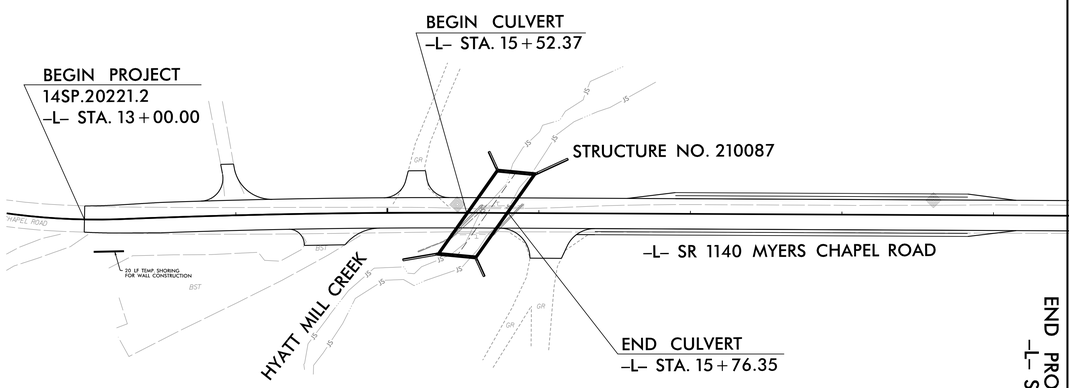

5

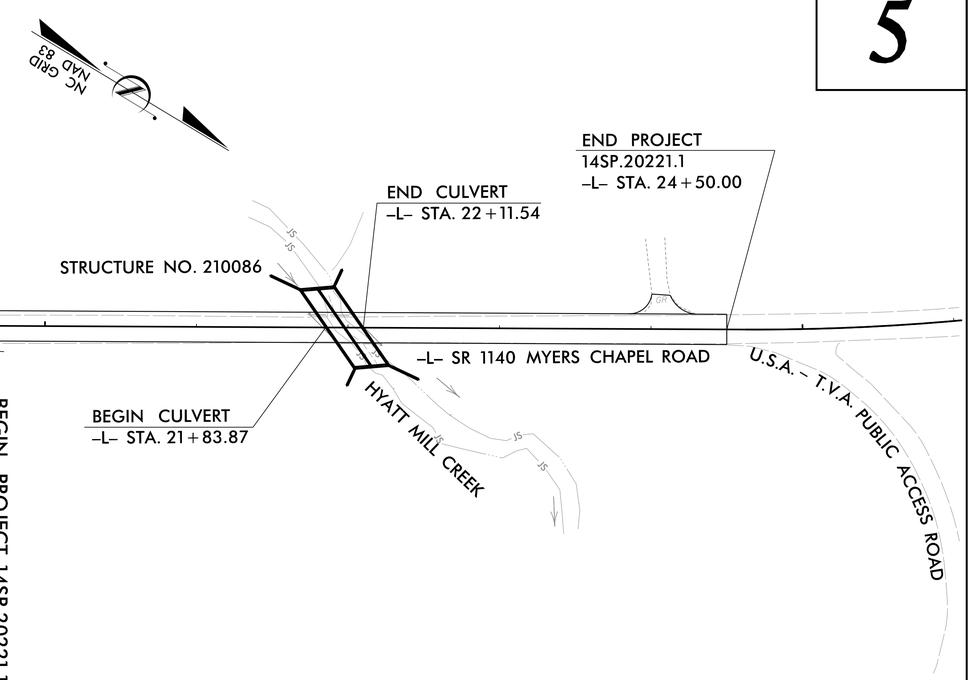

GRAPHIC SCALES

40 20 0 40 80
PLANS

INDEX OF SHEETS

SHEET NO.	DESCRIPTION
UO–1	TITLE SHEET
UO–2	UTILITIES BY OTHERS PLAN SHEET

UTILITY OWNERS ON PROJECT

(1) TELEPHONE – FRONTIER COMMUNICATIONS

(2) POWER & FIBER OPTIC – BLUE RIDGE MOUNTAIN EMC

PLANS PREPARED BY:

V&M
Vaughn & Melton
Consulting Engineers
1318-F Patton Ave.
Asheville, NC 28806
828·253·2796

PREPARED FOR THE OFFICE OF:
DIVISION OF HIGHWAYS
UTILITIES ENGINEERING SECTION
1591 MAIL SERVICES CENTER
RALEIGH NC 27699–1591
PHONE (919) 250–4128
FAX (919) 250–4119

Roger Worthington, P.E. — UTILITIES SECTION ENGINEER
Lynn Mann, P.G. — UTILITIES PROJECT DESIGNER

PROJECT REFERENCE NO.	SHEET NO.
14SP.20221.1 / 14SP.20221.2	U0-2

UTILITY PLAN BY OTHERS FOR PROJECTS 14SP.20221.1 AND 14SP.20221.2

UTILITIES BY OTHERS

NOTE:
ALL PROPOSED UTILITY WORK SHOWN ON THIS SHEET WILL BE DONE BY OTHERS

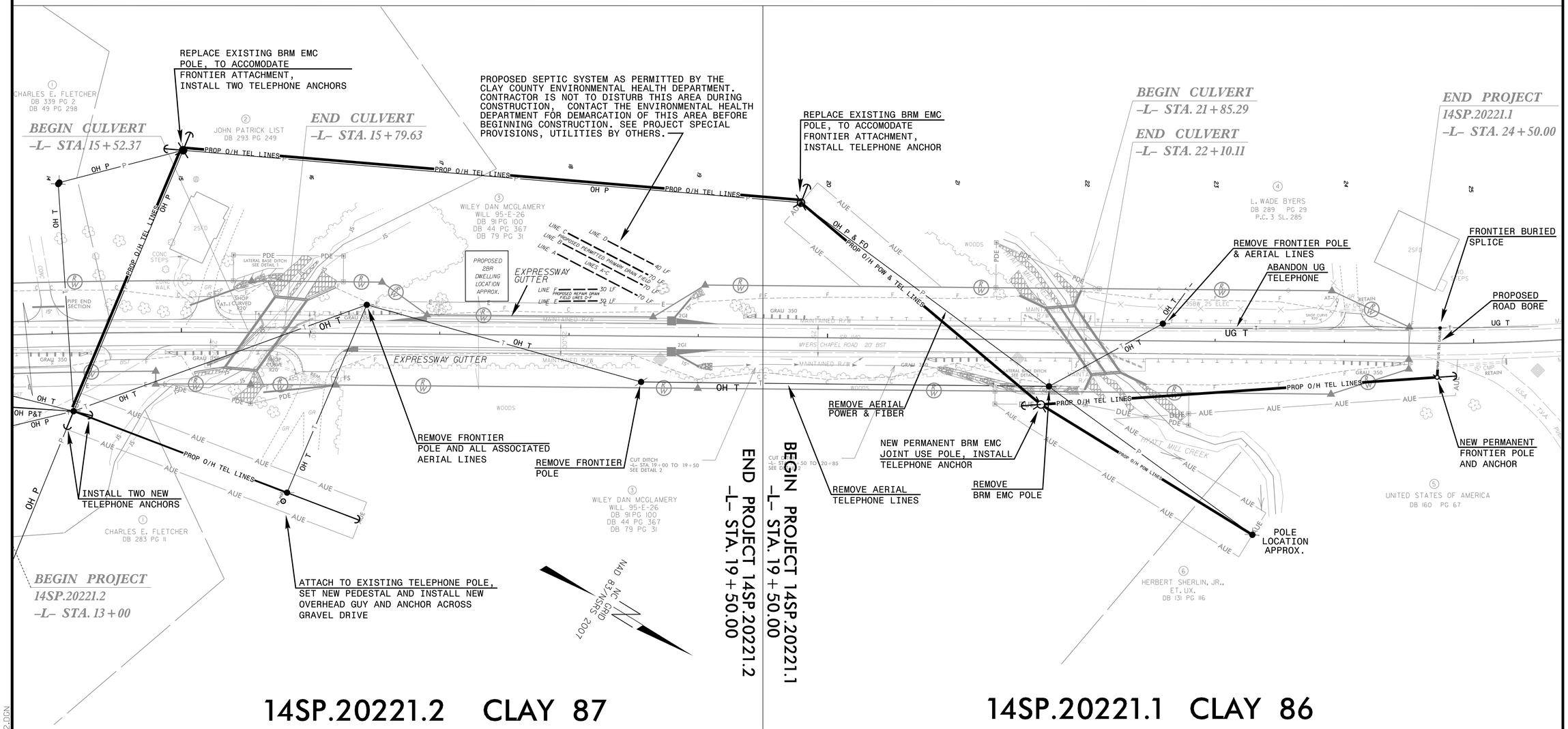

NOTE: THIS PLAN SHEET IS FOR UTILITY PURPOSES ONLY. SEE 14SP.20221.2 SHEET 4 & 14SP.20221.1 SHEET 5 FOR DESIGN DATA.

DETAIL 2
LATERAL BASE DITCH
(Not to Scale)

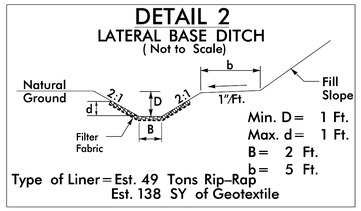

FROM STA. 20+85 TO STA. 21+95 RT

Vaughn & Melton
Consulting Engineers
Asheville, North Carolina
828-253-2796
Tri-Cities, TN 423-467-8401
Knoxville, TN 865-546-5800
Spartanburg, SC 864-574-4775
Charleston, SC 843-974-5650
Middlesboro, KY 606-248-6600
Atlanta, GA 770-627-3509
Charlotte, NC 704-357-0488
Boone, NC 828-355-9933

Copyright © 2006 Vaughn & Melton, Inc. All Rights Reserved

9/15/14
V&M PROJECT #31236-01 & 31236-02
TRANSPORTATION\31236-01\UTILITIES\U0-2.DGN