PROJ. REFERENCE NO.	SHEET NO.

SIGNING FOR RESURFACING PROJECTS

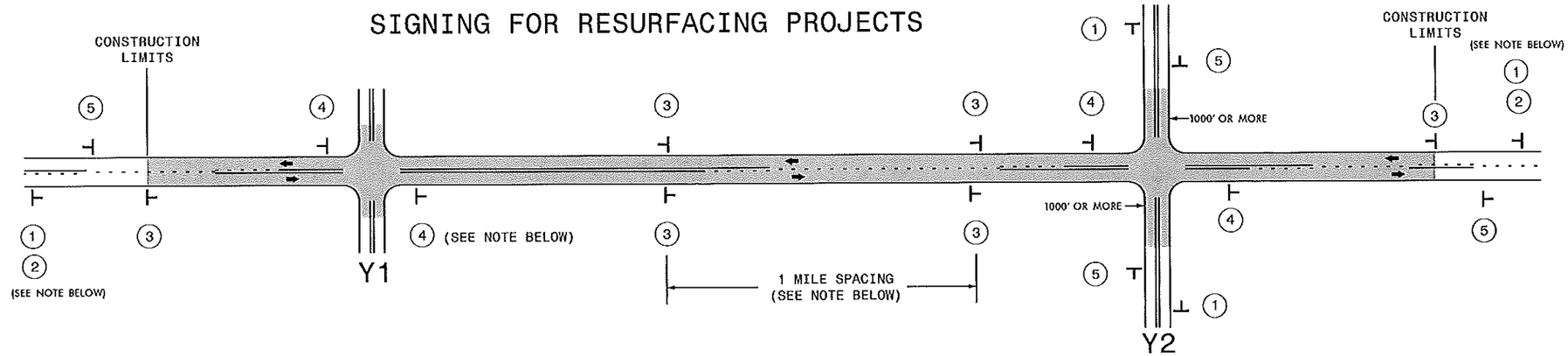

LEGEND
- ⊢ STATIONARY SIGN
- ← DIRECTION OF TRAFFIC FLOW

SIGNING NOTES AND PLACEMENT PER DIRECTION

MAINLINE (-L-) SIGNING

1	ROAD WORK AHEAD W20-1 48" X 48"	PLACE 1000' PRIOR TO BEGINNING OF CONSTRUCTION LIMITS. ONLY USED ON -Y- LINES IF RESURFACING LIMITS EXTEND 1000' ALONG -Y- LINE.
2	NEXT XX MILES W7-3aP 24" X 18"	#2 SIGN ONLY USED WHEN RESURFACING LIMITS ARE 2 OR MORE MILES IN LENGTH. ROUND UP TO NEXT WHOLE NUMBER.(NO FRACTIONAL OR DECIMAL NUMBERS)
3	LOW SOFT SHOULDER SP 13107 48" X 48"	PLACE INITIALLY AT THE CONSTRUCTION LIMITS AND SPACED 1 MILE APART THEREAFTER. IF NO -Y- LINES EXIST, PLACE 2ND SET ½ MILE FROM THE CONSTRUCTION LIMITS AND THEN SPACE 1 MILE THEREAFTER.
4	ROAD UNDER CONST. SP 13106 48" X 48"	THESE ARE FOR -Y- LINES THAT ARE "THROUGH" ROADWAYS. DEAD END AND SUBDIVISION ROADS ARE NOT "THROUGH" ROADWAYS. INSTALL 500' +/- FROM EACH -Y- LINE APPROACH AS SHOWN ABOVE. FOR MULTIPLE -Y- LINES THAT ARE SEPARATED BY 0.25 MILES OR LESS, TREAT AS A SINGLE UNIT AND INSTALL WITHIN 500' OF EACH APPROACH. A MAXIMUM OF 2 SIGN SETS PER MILE. DO NOT INSTALL WHEN -Y- LINES ARE WITHIN 0.5 MILES FROM "END ROAD WORK" SIGN.
5	END ROAD WORK G20-2 A 48" X 24"	PLACE 500' FOLLOWING THE END OF CONSTRUCTION LIMITS.

-Y- LINE SIGNING

NO REQUIRED STATIONARY SIGNING FOR THE FOLLOWING -Y- LINE CONDITIONS:

1) LESS THAN 1000' OF RESURFACING ALONG -Y- LINE
2) SUBDIVISION ROADS
3) DEAD END ROADS

WHEN PAVING/CONSTRUCTION ACTIVITIES PROCEED ACROSS AN UNSIGNED -Y- LINE, ADVANCE WARNING PORTABLE SIGNS SHALL BE USED ALONG THE -Y- LINE AS SHOWN BELOW. REMOVE UPON COMPLETION OF WORK.

ROAD WORK AHEAD
W20-1
48" X 48"

PLACED 500' IN ADVANCE OF FLAGGER.

W20-7 A
48" X 48"

PLACED 250' IN ADVANCE OF FLAGGER.

48'

DIVISION OF HIGHWAYS · STATE OF NORTH CAROLINA · DEPARTMENT OF TRANSPORTATION · WORK ZONE TRAFFIC CONTROL

RESURFACING
ADVANCE WARNING SIGNS
FOR
RURAL AND SUBURBAN
2 LANE ROADWAYS

8/8/2013
S:\TMU\WZTC\Resurfacing\2013Resurfacing\2013Documents\New_Procedures_05.09.2013\Resurfacing_AdvWarn_2Ln.dgn
User:rmagrett

PROJ. REFERENCE NO.	SHEET NO.

DIVIDED MEDIANS WITH WIDTHS 46′ OR GREATER

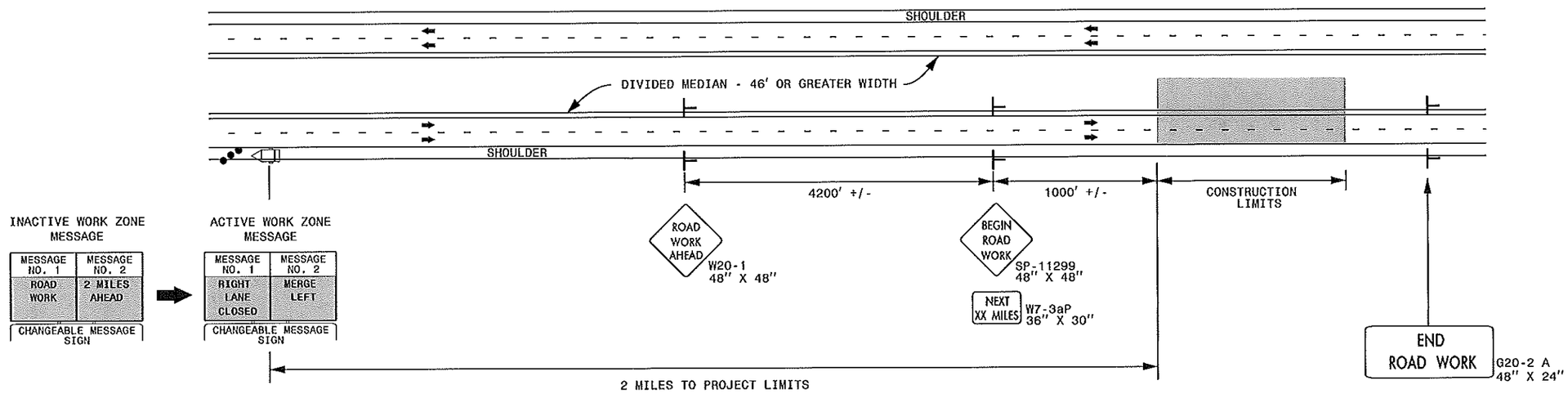

DIVIDED MEDIANS WITH WIDTHS LESS THAN 46′ OR WITH PERMANENT MEDIAN BARRIER

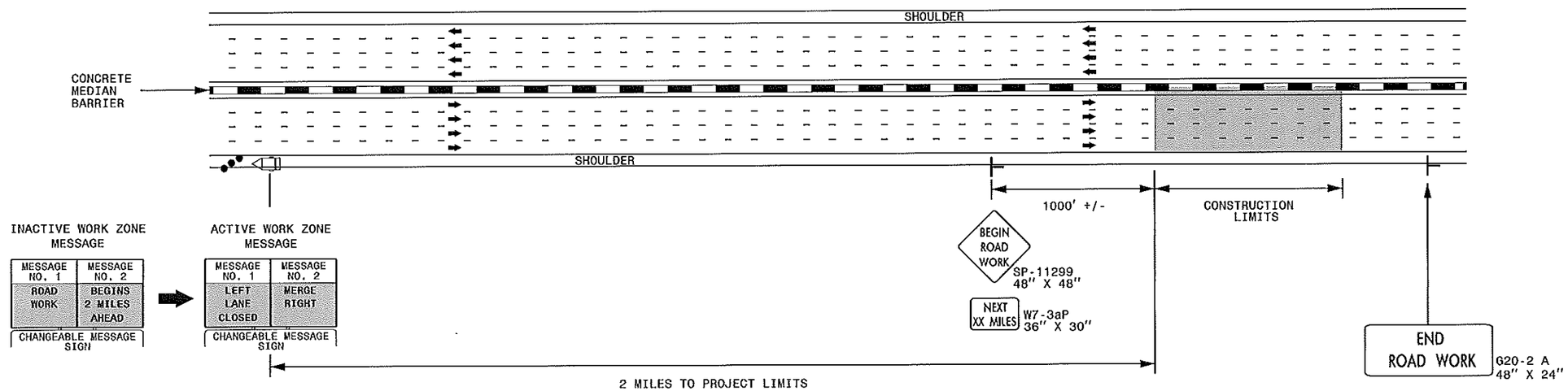

NOTES:

1) LATERAL CLEARANCE AT ALL SIGN LOCATIONS SHALL BE 6′ AS MEASURED FROM THE EDGE OF PAVEMENT.
2) MOUNT SIGNS THAT ARE LARGER THAN 10 SQUARE FEET IN AREA ON TWO OR MORE WOOD OR U-CHANNEL SUPPORTS. PERFORATED SQUARE TUBING SUPPORT SYSTEMS MAY SUPPORT LARGER AREAS ON A SINGLE SUPPORT. FOLLOW MANUFACTURER'S RECOMMENDATIONS. THESE SYSTEMS SHALL BE NCHRP 350 COMPLIANT AND NCDOT APPROVED.
3) FOR MEDIAN WIDTHS LESS THAN 46′ (MEASURED EDGELINE TO EDGELINE) USE THE BOTTOM DRAWING.
4) IF STATIONARY GENERAL WARNING SIGNS ARE USED, THEY WILL BE PAID FOR PER SECTION 104 OF THE NCDOT STANDARD SPECIFICATIONS AS EXTRA WORK.
5) INSTALL "ROAD WORK AHEAD"(W20-1) ALONG ENTRANCE RAMPS 500′ PRIOR TO RAMP TERMINAL, AND "END ROAD WORK" (G20-2a) AT THE END OF EXIT RAMPS WITHIN THE WORK ZONE.
6) IF MILLED AREAS ARE NOT PAVED BACK BY THE END OF THE WORK DAY, PORTABLE SIGNS SHALL BE USED TO WARN DRIVERS OF THE PRESENT CONDITIONS. THESE ARE TO INCLUDE, BUT NOT LIMITED TO "ROUGH ROAD" W8-8, "UNEVEN LANES" W8-11, "GROOVED PAVEMENT" W8-15 w/MOTORCYCLE PLAQUE MOUNTED BELOW. THESE ARE TO BE DOUBLE INDICATED ON MULTI-LANE ROADWAYS WITH SPEED LIMITS 45 MPH AND GREATER AND WITH DIVIDED MEDIANS OF 46′ OR GREATER. THESE PORTABLE SIGNS ARE INCIDENTAL TO THE OTHER ITEMS OF WORK INCLUDED IN THE TEMPORARY TRAFFIC CONTROL (LUMP SUM) PAY ITEM.

LEGEND

- CHANGEABLE MESSAGE SIGN (CMS)
- STATIONARY SIGN
- DIRECTION OF TRAFFIC FLOW
- TRAFFIC DRUM

DIVISION OF HIGHWAYS · STATE OF NORTH CAROLINA · DEPARTMENT OF TRANSPORTATION · WORK ZONE TRAFFIC CONTROL

RESURFACING ADVANCE WARNING SIGNS FOR HIGH SPEED FACILITIES ≥ 60 MPH

8/8/2013
S:\TMU\WZTC\Resurfacing\2013Resurfacing\2013Documents\New_Procedures_05.09.2013\Resurfacing_AdvWarn_HSpd.dgn
User:rmgarrett

PROJ. REFERENCE NO.	SHEET NO.

URBAN / SUBURBAN WORKZONES

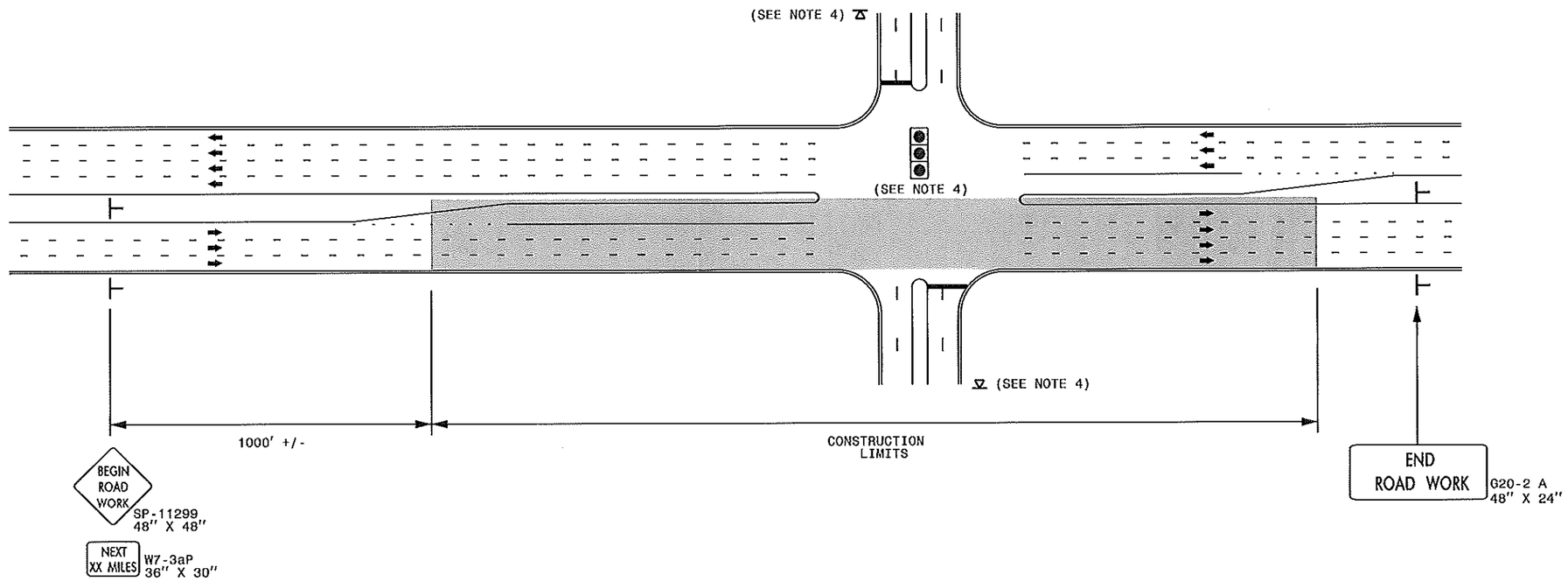

NOTES:

1) 48" x 48" SIZED SIGNS (SP- 11299) MAY BE REDUCED TO 36" X 36" ON ROADWAYS WITH SPEED LIMITS OF 40 MPH OR LESS.
2) MOUNT SIGNS THAT ARE LARGER THAN 10 SQUARE FEET IN AREA ON TWO OR MORE WOOD OR U-CHANNEL SUPPORTS. PERFORATED SQUARE TUBING SUPPORT SYSTEMS MAY SUPPORT LARGER AREAS ON A SINGLE SUPPORT. FOLLOW MANUFACTURER'S RECOMMENDATIONS. THESE SYSTEMS SHALL BE NCHRP 350 COMPLIANT AND NCDOT APPROVED.
3) ADVANCE WARNING SIGNS NOT REQUIRED ON NON-SIGNALIZED SIDE STREETS.
4) USE LAW ENFORCEMENT TO CONTROL TRAFFIC AT SIGNALIZED INTERSECTIONS AND PROVIDE PORTABLE "ROAD WORK AHEAD" (W20-1) SIGNS 500' IN ADVANCE ALONG BOTH APPROACHES FROM THE SIDE STREETS WHEN PAVING PROCEEDS THROUGH THE INTERSECTION.
5) LATERAL CLEARANCE AT ALL SIGN LOCATIONS SHALL BE 2' AS MEASURED FROM THE EDGE OF PAVEMENT OR THE FACE OF THE CURB. WHEN UNABLE TO OBTAIN THE LATERAL CLEARANCE WITHIN THE MEDIAN AREA USE SHOULDER MOUNTS ONLY.
6) SIGN MOUNT LOCATIONS SHALL NOT BLOCK SIDEWALKS OR DRIVEWAYS.
7) IF STATIONARY GENERAL WARNING SIGNS ARE USED, THEY WILL BE PAID FOR PER SECTION 104 OF THE NCDOT STANDARD SPECIFICATIONS AS EXTRA WORK.
8) IF MILLED AREAS ARE NOT PAVED BACK BY THE END OF THE WORK DAY, PORTABLE SIGNS SHALL BE USED TO WARN DRIVERS OF THE PRESENT CONDITIONS. THESE ARE TO INCLUDE, BUT NOT LIMITED TO "ROUGH ROAD" W8-8, "UNEVEN LANES" W8-11, "GROOVED PAVEMENT" W8-15 w/MOTORCYCLE PLAQUE MOUNTED BELOW. THESE ARE TO BE DOUBLE INDICATED ON MULTI-LANE ROADWAYS WITH SPEED LIMITS 45 MPH AND GREATER WHERE LATERAL CLEARANCE CAN BE OBTAINED WITHIN THE MEDIAN AREAS.THESE PORTABLE SIGNS ARE INCIDENTAL TO THE OTHER ITEMS OF WORK INCLUDED IN THE TEMPORARY TRAFFIC CONTROL (LUMP SUM) PAY ITEM.

LEGEND

- ⊢ STATIONARY SIGN
- ➡ DIRECTION OF TRAFFIC FLOW

DIVISION OF HIGHWAYS · STATE OF NORTH CAROLINA · DEPARTMENT OF TRANSPORTATION · WORK ZONE TRAFFIC CONTROL

RESURFACING ADVANCE WARNING SIGNS FOR URBAN / SUBURBAN FACILITIES

8/8/2013
S:\MAU\WZTC\Resurfacing\2013Resurfacing\2013Documents\New_Procedures_05_09_2013\Resurfacing_AdvWarn_Ur-Su.dgn
User:rmagrrett