09/08/99

TIP PROJECT: B-4241

CONTRACT: DN00249

See Sheet 1-A For Index of Sheets
See Sheet 1-B For Conventional Symbols

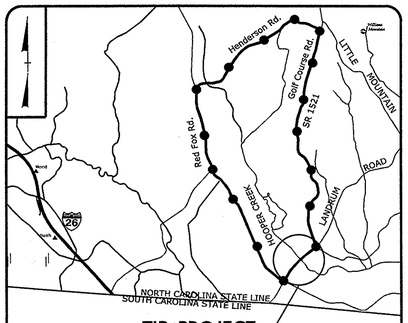

TIP PROJECT
B-4241

VICINITY MAP

OFFSITE DETOUR

STATE OF NORTH CAROLINA
DIVISION OF HIGHWAYS

POLK COUNTY

LOCATION: REPLACE BRIDGE 24 OVER HOOPER CREEK ON SR 1520 (LANDRUM ROAD).

TYPE OF WORK: GRADING, DRAINAGE, PAVING, AND STRUCTURE

STATE	STATE PROJECT REFERENCE NO.	SHEET NO.	TOTAL SHEETS
N.C.	B-4241	1	

STATE PROJ. NO.	F.A. PROJ. NO.	DESCRIPTION
33584.1.1	BRZ-1520(7)	P.E.
33584.2.1	BRZ-1520(7)	R /W, UTIL.
33584.3.1	BRZ-1520(7)	CONST.

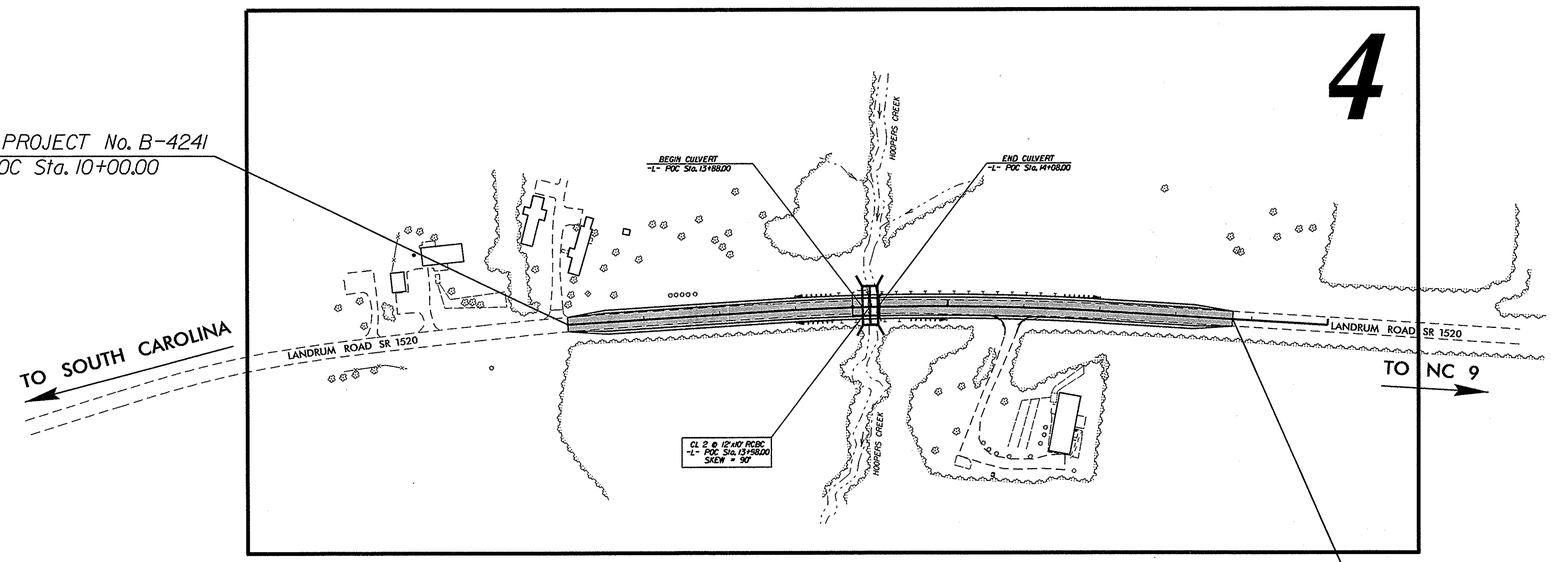

GRAPHIC SCALES

50 25 0 50 100
PLANS

50 25 0 50 100
PROFILE (HORIZONTAL)

10 5 0 10 20
PROFILE (VERTICAL)

DESIGN DATA

ADT 2013 = 4,157
ADT 2038 = 6,330
DHV = 10%
D = 60%
T = 5% *
V = 45 MPH
* (TTST 2% + DUALS 3%)

FUNCTIONAL CLASS. = RURAL LOCAL

SUB-REGIONAL TIER

PROJECT LENGTH

LENGTH ROADWAY TIP PROJECT NO. B-4241 = 0.162 MI.

LENGTH STRUCTURES TIP PROJECT NO. B-4241 = 0.003 MI.

TOTAL LENGTH TIP PROJECT NO. B-4241 = 0.165 MI.

Prepared in the Office of:
DIVISION OF HIGHWAYS
1000 Birch Ridge Dr., Raleigh NC, 27610

2012 STANDARD SPECIFICATIONS

RIGHT OF WAY DATE:
FEBRUARY 15, 2011

LETTING DATE:
NOVEMBER 26, 2013

B. DOUG TAYLOR PE
ASSIST. STATE ROADWAY DESIGN ENGINEER

STEVE KENDALL, PE
PROJECT DESIGN ENGINEER

HYDRAULIC ENGINEER
NORTH CAROLINA PROFESSIONAL SEAL 15633 ENGINEER JERRY L. LINDSEY
SIGNATURE: P.E. 4-29-13

ROADWAY DESIGN ENGINEER
NORTH CAROLINA PROFESSIONAL SEAL 33298 ENGINEER STEVEN D. KENDALL
SIGNATURE: S. D. Kendall 4-29-13 P.E.

DIVISION OF HIGHWAYS
STATE OF NORTH CAROLINA

STATE HIGHWAY DESIGN ENGINEER

24-APR-2013 14:46
R:\Roadway\Proj\B-4241_Rdy_tsh.dgn
$$$$USERNAME$$$$

12/05/11

PROJECT REFERENCE NO.	SHEET NO.
B-4241	1-B

Note: Not to Scale

****S.U.E. = Subsurface Utility Engineering***

STATE OF NORTH CAROLINA
DIVISION OF HIGHWAYS

CONVENTIONAL PLAN SHEET SYMBOLS

BOUNDARIES AND PROPERTY:

- State Line
- County Line
- Township Line
- City Line
- Reservation Line
- Property Line
- Existing Iron Pin — EIP
- Property Corner
- Property Monument — ECM
- Parcel/Sequence Number — 123
- Existing Fence Line
- Proposed Woven Wire Fence
- Proposed Chain Link Fence
- Proposed Barbed Wire Fence
- Existing Wetland Boundary — WLB
- Proposed Wetland Boundary — WLB
- Existing Endangered Animal Boundary — EAB
- Existing Endangered Plant Boundary — EPB
- Known Soil Contamination: Area or Site
- Potential Soil Contamination: Area or Site

BUILDINGS AND OTHER CULTURE:

- Gas Pump Vent or U/G Tank Cap
- Sign — S
- Well — W
- Small Mine
- Foundation
- Area Outline
- Cemetery
- Building
- School
- Church
- Dam

HYDROLOGY:

- Stream or Body of Water
- Hydro, Pool or Reservoir
- Jurisdictional Stream — JS
- Buffer Zone 1 — BZ 1
- Buffer Zone 2 — BZ 2
- Flow Arrow
- Disappearing Stream
- Spring
- Wetland
- Proposed Lateral, Tail, Head Ditch — FLOW
- False Sump

RAILROADS:

- Standard Gauge — CSX TRANSPORTATION
- RR Signal Milepost — MILEPOST 35
- Switch — SWITCH
- RR Abandoned
- RR Dismantled

RIGHT OF WAY:

- Baseline Control Point
- Existing Right of Way Marker
- Existing Right of Way Line
- Proposed Right of Way Line — RW
- Proposed Right of Way Line with Iron Pin and Cap Marker — RW
- Proposed Right of Way Line with Concrete or Granite R/W Marker — RW
- Proposed Control of Access Line with Concrete C/A Marker — CA
- Existing Control of Access — CA
- Proposed Control of Access — CA
- Existing Easement Line — E
- Proposed Temporary Construction Easement — E
- Proposed Temporary Drainage Easement — TDE
- Proposed Permanent Drainage Easement — PDE
- Proposed Permanent Drainage / Utility Easement — DUE
- Proposed Permanent Utility Easement — PUE
- Proposed Temporary Utility Easement — TUE
- Proposed Aerial Utility Easement — AUE
- Proposed Permanent Easement with Iron Pin and Cap Marker

ROADS AND RELATED FEATURES:

- Existing Edge of Pavement
- Existing Curb
- Proposed Slope Stakes Cut — C
- Proposed Slope Stakes Fill — F
- Proposed Curb Ramp — CR
- Existing Metal Guardrail
- Proposed Guardrail
- Existing Cable Guiderail
- Proposed Cable Guiderail
- Equality Symbol
- Pavement Removal

VEGETATION:

- Single Tree
- Single Shrub
- Hedge
- Woods Line
- Orchard
- Vineyard — Vineyard

EXISTING STRUCTURES:

MAJOR:

- Bridge, Tunnel or Box Culvert — CONC
- Bridge Wing Wall, Head Wall and End Wall — CONC WW

MINOR:

- Head and End Wall — CONC HW
- Pipe Culvert
- Footbridge
- Drainage Box: Catch Basin, DI or JB — CB
- Paved Ditch Gutter
- Storm Sewer Manhole — S
- Storm Sewer — S

UTILITIES:

POWER:

- Existing Power Pole
- Proposed Power Pole
- Existing Joint Use Pole
- Proposed Joint Use Pole
- Power Manhole — P
- Power Line Tower
- Power Transformer
- U/G Power Cable Hand Hole
- H-Frame Pole
- Recorded U/G Power Line — P
- Designated U/G Power Line (S.U.E.*) — P

TELEPHONE:

- Existing Telephone Pole
- Proposed Telephone Pole
- Telephone Manhole — T
- Telephone Booth
- Telephone Pedestal — T
- Telephone Cell Tower
- U/G Telephone Cable Hand Hole — HH
- Recorded U/G Telephone Cable — T
- Designated U/G Telephone Cable (S.U.E.*) — T
- Recorded U/G Telephone Conduit — TC
- Designated U/G Telephone Conduit (S.U.E.*) — TC
- Recorded U/G Fiber Optics Cable — T FO
- Designated U/G Fiber Optics Cable (S.U.E.*) — T FO

WATER:

- Water Manhole — W
- Water Meter
- Water Valve
- Water Hydrant
- Recorded U/G Water Line — W
- Designated U/G Water Line (S.U.E.*) — W
- Above Ground Water Line — A/G Water

TV:

- TV Satellite Dish
- TV Pedestal — C
- TV Tower
- U/G TV Cable Hand Hole — HH
- Recorded U/G TV Cable — TV
- Designated U/G TV Cable (S.U.E.*) — TV
- Recorded U/G Fiber Optic Cable — TV FO
- Designated U/G Fiber Optic Cable (S.U.E.*) — TV FO

GAS:

- Gas Valve
- Gas Meter
- Recorded U/G Gas Line — G
- Designated U/G Gas Line (S.U.E.*) — G
- Above Ground Gas Line — A/G Gas

SANITARY SEWER:

- Sanitary Sewer Manhole
- Sanitary Sewer Cleanout
- U/G Sanitary Sewer Line — SS
- Above Ground Sanitary Sewer — A/G Sanitary Sewer
- Recorded SS Forced Main Line — FSS
- Designated SS Forced Main Line (S.U.E.*) — FSS

MISCELLANEOUS:

- Utility Pole
- Utility Pole with Base
- Utility Located Object
- Utility Traffic Signal Box — S
- Utility Unknown U/G Line — ?UTL
- U/G Tank; Water, Gas, Oil
- Underground Storage Tank, Approx. Loc. — UST
- A/G Tank; Water, Gas, Oil
- Geoenvironmental Boring
- U/G Test Hole (S.U.E.*)
- Abandoned According to Utility Records — AATUR
- End of Information — E.O.I.

PROJECT REFERENCE NO.	SHEET NO.
B-4241	2
ROADWAY DESIGN	PAVEMENT DESIGN ENGINEER

NORTH CAROLINA PROFESSIONAL SEAL 33296 ENGINEER STEVEN D. KENDALL
5-2-13

NORTH CAROLINA PROFESSIONAL SEAL 22896 ENGINEER CLARK S. MORRISON
5/2/13

PAVEMENT SCHEDULE

FINAL PAVEMENT DESIGN

C1	PROP. APPROX. 3" ASPHALT CONCRETE SURFACE COURSE, TYPE S9.5B, AT AN AVERAGE RATE OF 140 LBS. PER SQ. YD.IN EACH OF TWO LAYERS.	E1	PROP. APPROX. 4" ASPHALT CONCRETE BASE COURSE, TYPE B25.0B, AT AN AVERAGE RATE OF 456 LBS. PER SQ. YD.
D1	PROP. APPROX. 2½" ASPHALT CONCRETE INTERMEDIATE COURSE, TYPE I19.0B, AT AN AVERAGE RATE OF 285 LBS. PER SQ. YD.	T	EARTH MATERIAL.

NOTE: PAVEMENT EDGE SLOPES ARE 1:1 UNLESS SHOWN OTHERWISE.

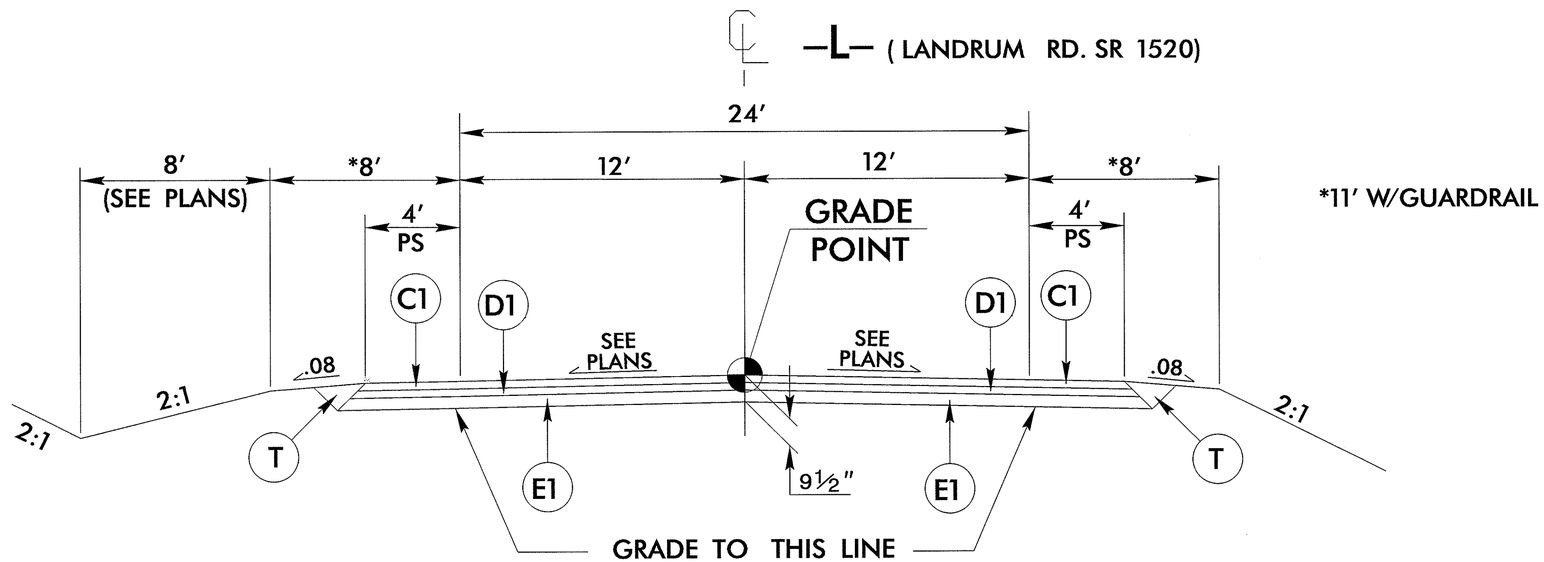

TYPICAL SECTION NO. 1

–L– Sta. 10+00.00 to Sta. 18+75.00

26-APR-2013 08:55
R:\Roadway\Proj\B4241_Rdy_typ2.dgn
$$$$USERNAME$$$$

STATE OF NORTH CAROLINA
DIVISION OF HIGHWAYS

SUMMARY OF QUANTITIES

ITEM NUMBER	SECTION NUMBER	QUANTITY	UNIT	DESCRIPTION
0000100000–N	800	1	LS	Mobilization
0000400000–N	801	1	LS	Construction Surveying
0043000000–N	226	1	LS	Grading
		.45	ACR	Clearing & Grubbing
		250	CY	Unclassified Excavation
		2,200	CY	Borrow Excavation
		1,950	SY	Removal of Existing Asphalt Pavement
		1	LS	Fine Grading
0050000000–E	226	1	ACR	Supp Clearing & Grubbing
0057000000–E	226	50	CY	Undercut Excavation
0195000000–E	265	50	CY	Select Granular Material
0196000000–E	270	50	SY	Geotextile Soil Stabilization
0318000000–E	300	5	TON	Foundation Cond. Material Minor Structures
0320000000–E	300	10	SY	Foundation Cond. Geotextile
0354000000–E	310	24	LF	24" Drainage Pipe
0995000000–E	340	20	LF	Pipe Removal
1220000000–E	545	15	TON	Incidental Stone Base
1489000000–E	610	730	TON	Asph. Conc. Base Course, Type B 25.0 B
1498000000–E	610	450	TON	Asph. Conc. Inter. Course, Type I 19.0 B
1519000000–E	610	520	TON	Asph. Conc. Surface Course, Type S 9.5 B
1575000000–E	620	85	TON	Asph. Binder for Plant Mix
3030000000–E	862	425	LF	Steel BM Guardrail
3150000000–N	862	5	Each	Additional Guardrail Posts
3165000000–N	SP	4	Each	Guardrail Anchor Units, Type 350 (TL–3)
3628000000–E	876	16	TON	Rip Rap, Class 'I'
3642000000–E	876	98	Ton	Plain Rip Rap, Class 'A'
3656000000–E	876	375	SY	Geotextile For Drainage
6000000000–E	1605	575	LF	Temporary Silt Fence
6006000000–E	1610	140	TON	Eros. Control Stone Cl. 'A'
6009000000–E	1610	230	TON	Eros. Control Stone Cl. 'B'
6012000000–E	1610	165	TON	Sediment Control Stone
6015000000–E	1615	0.7	ACR	Temporary Mulching
6018000000–E	1620	50	LB	Seed For Temp. Seeding
6021000000–E	1620	0.25	TON	Fert. for Temp. Seeding
6024000000–E	1622	100	LF	Temporary Slope Drains
6029000000–E	SP	100	LF	Safety Fence
6030000000–E	1630	100	CY	Silt Excavation

ITEM NUMBER	SECTION NUMBER	QUANTITY	UNIT	DESCRIPTION
6036000000–E	1631	3050	SY	Matting for Erosion Control
6037000000–E	SP	100	SY	Coir Fiber Mat
6042000000–E	1632	20	LF	¼" Hardware Cloth
6070000000–N	1639	4	EA	Special Stilling Basins
6071010000–E	SP	100	LF	Wattle
6071020000–E	SP	80	LB	PolyAcrylamide (PAM)
6084000000–E	1660	0.7	ACR	Seeding and Mulching
6090000000–E	1662	50	LB	Seed for Repair Seeding
6093000000–E	1661	0.25	TON	Fert. for Repair Seeding
6096000000–E	1662	50	LB	Seed for Supp. Seeding
6108000000–E	1665	0.75	TON	Fertilizer Top Dressing
6111000000–E	SP	175	LF	Impervious Dike
6117000000–N	1675	15	EA	Response for Erosion Control
8035000000–N	402	1	LS	REMV. EXIST STR. (10+81.71)
8126000000–N	414	1	LS	Culvert Excavation (10+81.71)
8133000000–E	414	100	TON	Foundation Cond. Material, Box Culvert
8196000000–E	420	195.1	CY	Class A Concrete (Culv.)
8245000000–E	425	23298	LB	Reinforcing Steel (Culv.)

ITEM NUMBER	SECTION NUMBER	QUANTITY	UNIT	DESCRIPTION

5/28/99
05-NOV-2013 12:21
$$$$$$$$$$$$$$$DGN$$$$$$$$$$$$$$$$$$$

PROJECT REFERENCE NO.	SHEET NO.
B-4241	4
R/W SHEET NO.	
ROADWAY DESIGN ENGINEER	HYDRAULICS

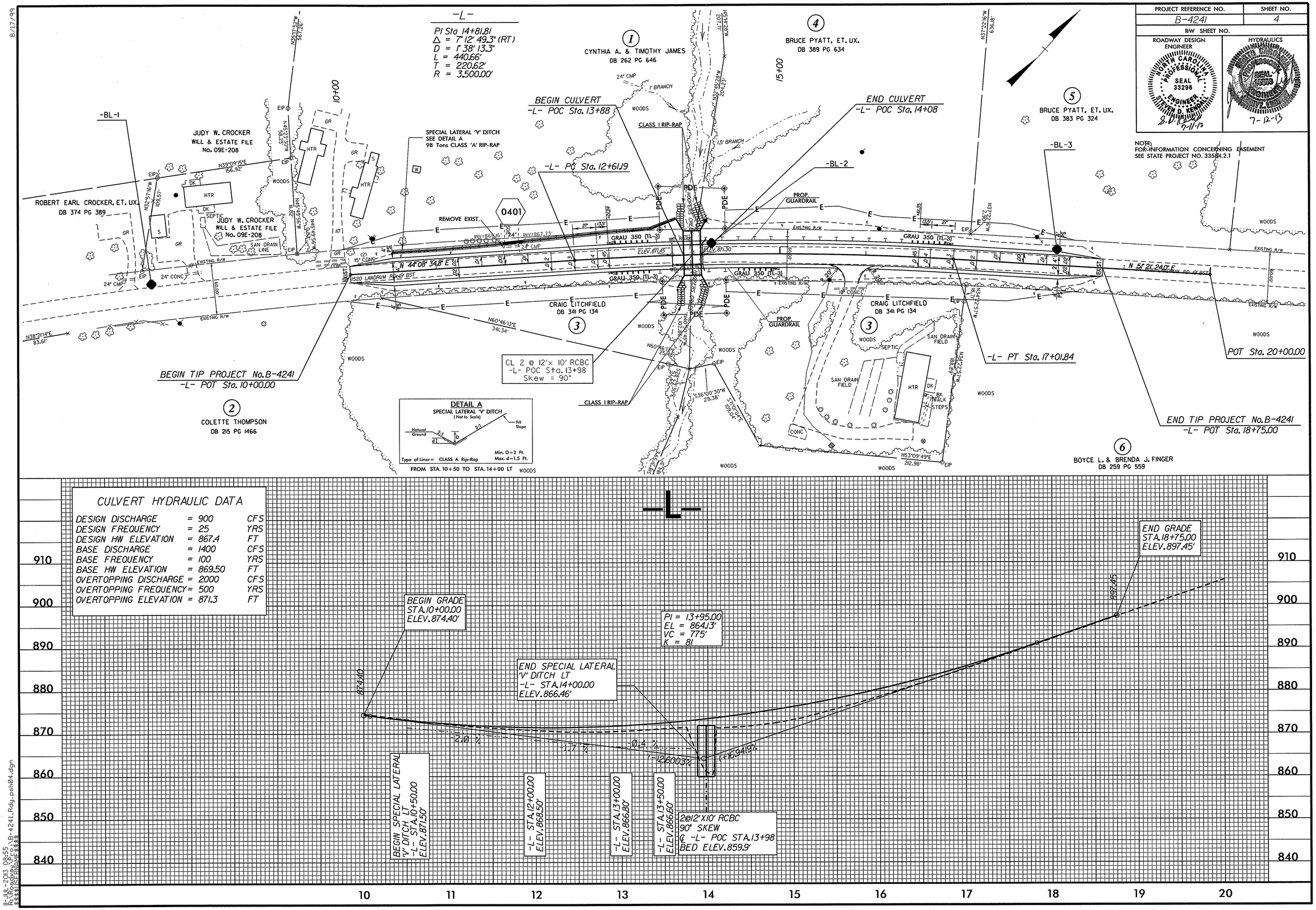

8/17/99

11-JUL-2013 08:55
R:\Roadway\Proj\B-4241_Rdy_psh04.dgn
$$$$USERNAME$$$$

D253042 7/11/2013 B-4241_Rdy_psh04 vbbarodawala RD-Oce860-34

12/06/07

COMPUTED BY: T. BURNS	DATE: APRIL 2013
CHECKED BY: V. BARODAWALA	DATE: APRIL 2013

STATE OF NORTH CAROLINA
DIVISION OF HIGHWAYS

PROJECT REFERENCE NO.	SHEET NO.
B-4241	3-A

NOTE: Invert Elevations are for Bid Purposes only and shall not be used for project construction stakeout.
See "Standard Specifications For Roads and Structures, Section 300-5".

STATEWIDE
LIST OF PIPES, ENDWALLS, ETC. (FOR PIPES 48" & UNDER)

STATION / SIZE / THICKNESS OR GAUGE	LOCATION (LT,RT, OR CL)	STRUCTURE NO. FROM	STRUCTURE NO. TO	TOP ELEVATION	INVERT ELEVATION	INVERT ELEVATION	SLOPE CRITICAL	SIDE DRAIN PIPE (RCP, CSP, CAAP, HDPE, or PVC) 12"	15"	18"	24"	30"	36"	42"	48"	DO NOT USE RCP	DO NOT USE CSP	DO NOT USE CAAP	DO NOT USE HDPE
11+78	LT	0401									24								
TOTAL											24								

STATION	C.S. PIPE 12" .064	15" .064	18" .064	24" .064	36" .079	42" .109	48" .109	R.C. PIPE (CLASS III) 15"	18"	24"	30"	36"	42"	48"	R.C. PIPE (CLASS IV) 12"	15"	18"	24"	30"	36"	42"	48"
11+78																						
TOTAL																						

STATION	**" R. C. PIPE (CLASS V)	**" R. C. PIPE CULVERTS, CONTRACTOR DESIGN PIPE	**" R. C. PIPE CULVERTS, CONTRACTOR DESIGN PIPE	15" SIDE DRAIN PIPE	18" SIDE DRAIN PIPE	ENDWALLS STD. 838.01, STD. 838.11 OR STD. 838.80 (UNLESS NOTED OTHERWISE) CU. YDS. R.C.P.	C.S.P.	QUANTITIES FOR DRAINAGE STRUCTURES * TOTAL L.F. FOR PAY QUANTITY SHALL BE COL. 'A' + (1.3 X COL.'B') PER EACH (0' THRU 5.0')	LIN. *FT. A 5.0' THRU 10.0'	B 10.0' AND ABOVE	C.B. STD. 840.01 OR STD. 840.02	FRAME, GRATES AND HOOD STANDARD 840.03 TYPE OF GRATE E	F	G		CONCRETE TRANSITIONAL SECTION CATCH BASIN	DROP INLET							CORR. STEEL ELBOWS NO. & SIZE	CONC. COLLARS CL. "B" C.Y. STD 840.72	CONC. & BRICK PIPE PLUG, C.Y. STD. 840.71	PIPE REMOVAL LIN.FT.	REMARKS
11+78																											20	
TOTAL																											20	

ABBREVIATIONS

C.B.	CATCH BASIN
N.D.I.	NARROW DROP INLET
D.I.	DROP INLET
G.D.I.	GRATED DROP INLET
G.D.I. (N.S.)	GRATED DROP INLET (NARROW SLOT)
J.B.	JUNCTION BOX
M.H.	MANHOLE
T.B.D.I.	TRAFFIC BEARING DROP INLET
T.B.J.B.	TRAFFIC BEARING JUNCTION BOX

PARCEL INDEX

PARCEL No.	NAME	DEED BOOK INFO
1	CYNTHIA A. & TIMOTHY JAMES	DB. 262 PG 646
2	COLETTE THOMPSON	DB. 215 PG 1466
3	CRAIG LITCHFIELD	DB. 341 PG 134
4	BRUCE PYATT, ET, UX.	DB. 389 PG 634
5	BRUCE PYATT, ET, UX.	DB. 383 PG 324
6	BOYCE L. & BRENDA J. FINGER	DB. 259 PG 559

SUMMARY OF EARTHWORK in Cu. Yds.

STATION	STATION	UNCL. EXCAV.	EMBANK. +%	BORROW	WASTE
10+50.00	18+50.00	228	2,233	2,005	
	SUBTOTAL:	228	2,233	2,005	
	PROJECT TOTALS:	228	2,233	2,005	
EST. 5% TO REPLACE					
TOP SOIL ON BORROW PIT				100	
	GRAND TOTALS:	228	2,233	2,106	
	SAY:	250		2,200	

Earthwork quantities are calculated by the Roadway Design Unit.

"N" = DISTANCE FROM EDGE OF LANE TO FACE OF GUARDRAIL.
TOTAL SHOULDER WIDTH = DISTANCE FROM EDGE OF TRAVEL LANE TO SHOULDER BREAK POINT.
FLARE LENGTH = DISTANCE FROM LAST SECTION OF PARALLEL GUARDRAIL TO END OF GUARDRAIL.
W = TOTAL WIDTH OF FLARE FROM BEGINNING OF TAPER TO END OF GUARDRAIL.
G = GATING IMPACT ATTENUATOR TYPE 350
NG = NON-GATING IMPACT ATTENUATOR TYPE 350

GUARDRAIL SUMMARY

SURVEY LINE	BEG. STA.	END STA.	LOCATION	LENGTH STRAIGHT	SHOP CURVED	DOUBLE FACED	WARRANT POINT APPROACH END	TRAILING END	"N" DIST. FROM E.O.L.	TOTAL SHOUL. WIDTH	FLARE LENGTH APPROACH END	TRAILING END	W APPROACH END	TRAILING END	ANCHORS	GRAU 350 (TL-3)	ANCHORS DEDUCTIONS						IMPACT ATTENUATOR TYPE 350 EA	G	NG	SINGLE FACED GUARDRAIL	REMOVE EXISTING GUARDRAIL	REMOVE AND STOCKPILE EXISTING GUARDRAIL	REMARKS
L	13+00.00	17+00.00	LT.	400'			16+00.00	13+78.21	8'	11'	50'	50'				2													
L	12+98.84	14+98.84	RT.	200'			13+77.57	14+20.00	8'	11'	50'	50'				2													
			SUB-TOTAL	600'											TOTAL	4	GRAU	350 (TL-3)		4 @ 50' = 200'									ADDITIONAL GUARDRAIL POSTS = 5 EACH
	MINUS DEDUCTION FOR ANCHORS			-200'																									
			TOTAL	400'																									
			SAY	425'																									

15-JUL-2013 11:34
R:\Roadway\Proj\B-4241_Rdy_sum3A.dgn
$$$$USERNAME$$$$

PROJ. REFERENCE NO.	SHEET NO.
B-4241	X-1

STATE OF NORTH CAROLINA
DIVISION OF HIGHWAYS

NOTE: EMBANKMENT COLUMN DOES NOT INCLUDE BACKFILL FOR UNDERCUT

CROSS-SECTION SUMMARY

Station L	Uncl. Exc. (cu. yd.)	Embt (cu. yd.)
10+50.00	0	0
11+00.00	49	10
11+50.00	37	13
12+00.00	18	35
12+50.00	6	81
13+00.00	5	127
13+50.00	4	172
13+98.00	1	97
14+00.00	1	99
14+50.00	0	170
15+00.00	0	376
15+50.00	0	382
16+00.00	0	269
16+50.00	0	125
17+00.00	4	46
17+50.00	17	20
18+00.00	41	12
18+50.00	46	7

INDEX OF SHEETS

LINE	STATIONS	SHEETS
-L-	10+00.00 TO 20+00.00	X-2 THRU X-6

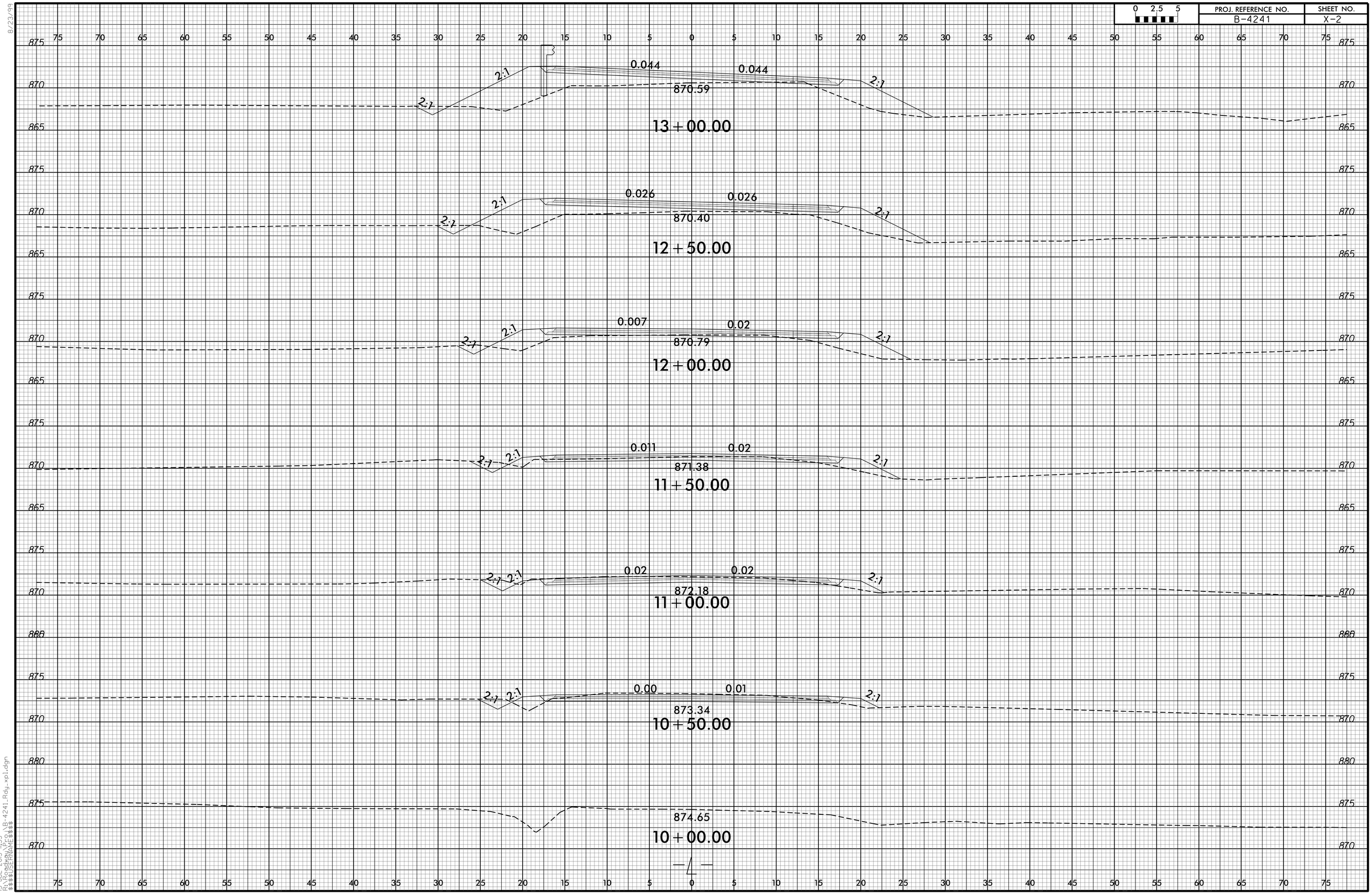

8/23/99

15-JUL-2013 11:35
R:\Roadway\Proj\B-4241_Rdy_xpl.dgn
$$$$USERNAME$$$$

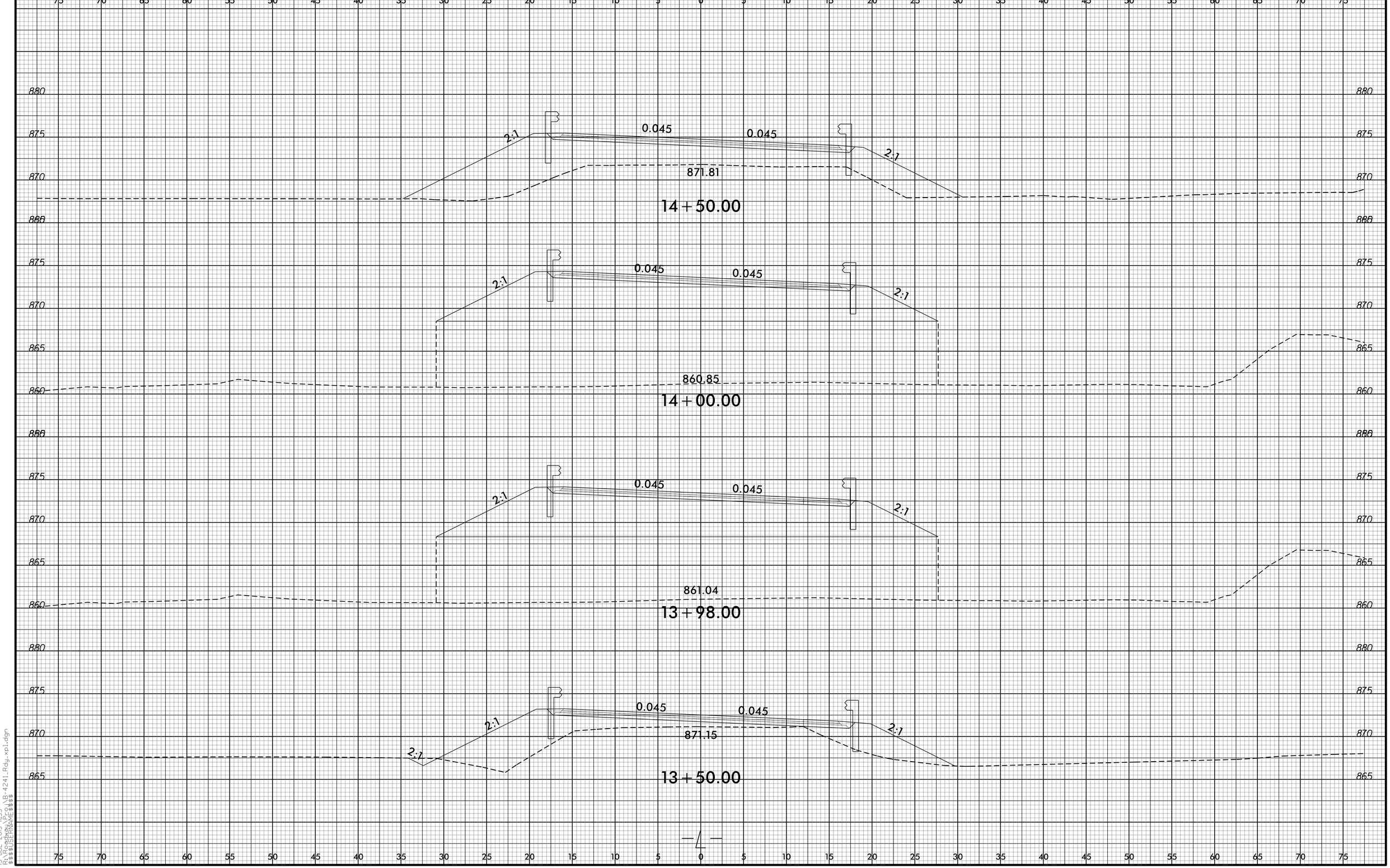

8/23/99

15-JUL-2013 11:35
R:\Roadway\Proj\B-4241_Rdy_xpl.dgn
$$$$USERNAME$$$$

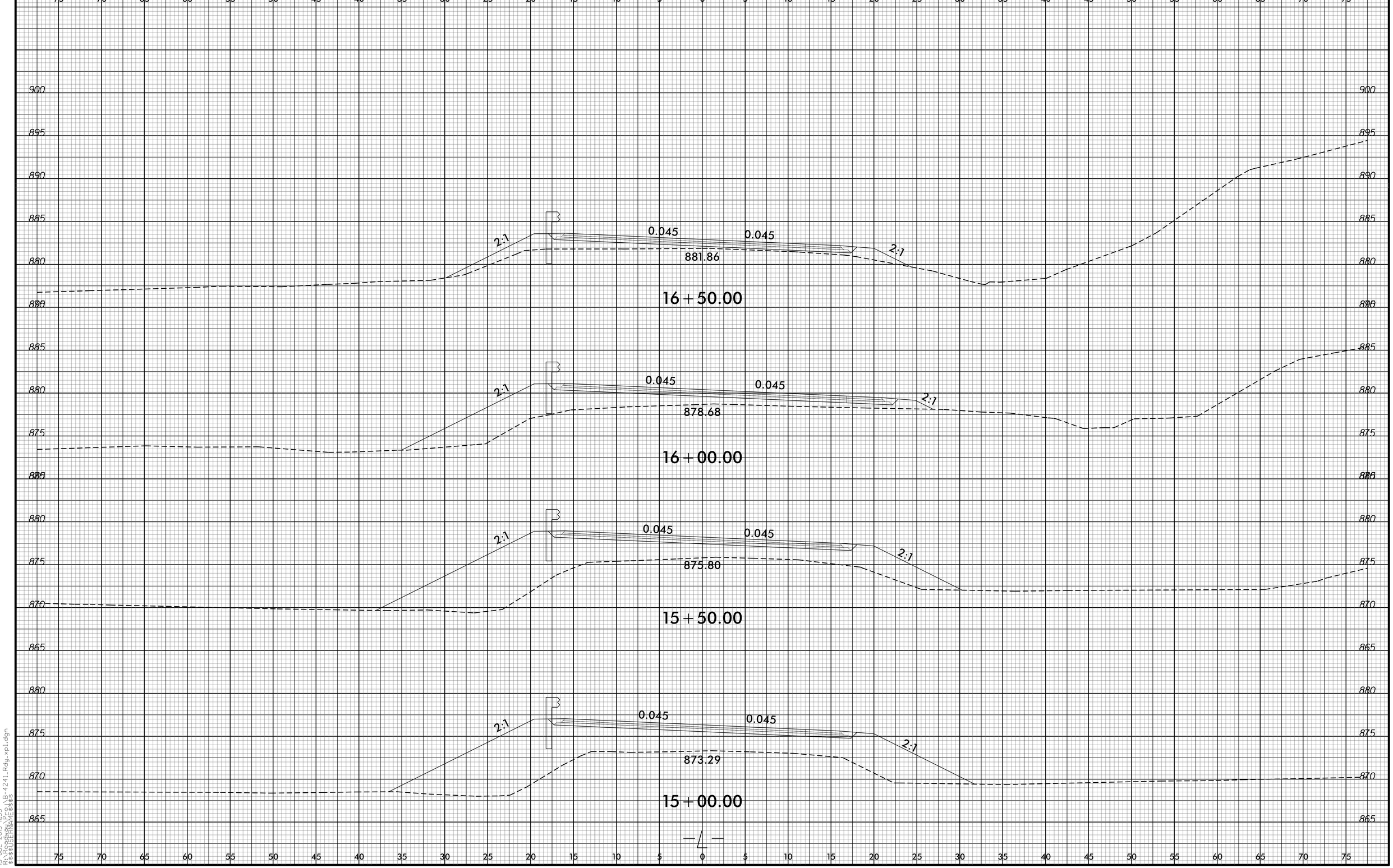

8/23/99

15-JUL-2013 11:35
R:\Roadway\Proj\B-4241_Rdy_xpl.dgn
$$$$USERNAME$$$$

0 2.5 5	PROJ. REFERENCE NO.	SHEET NO.
	B-4241	X-5

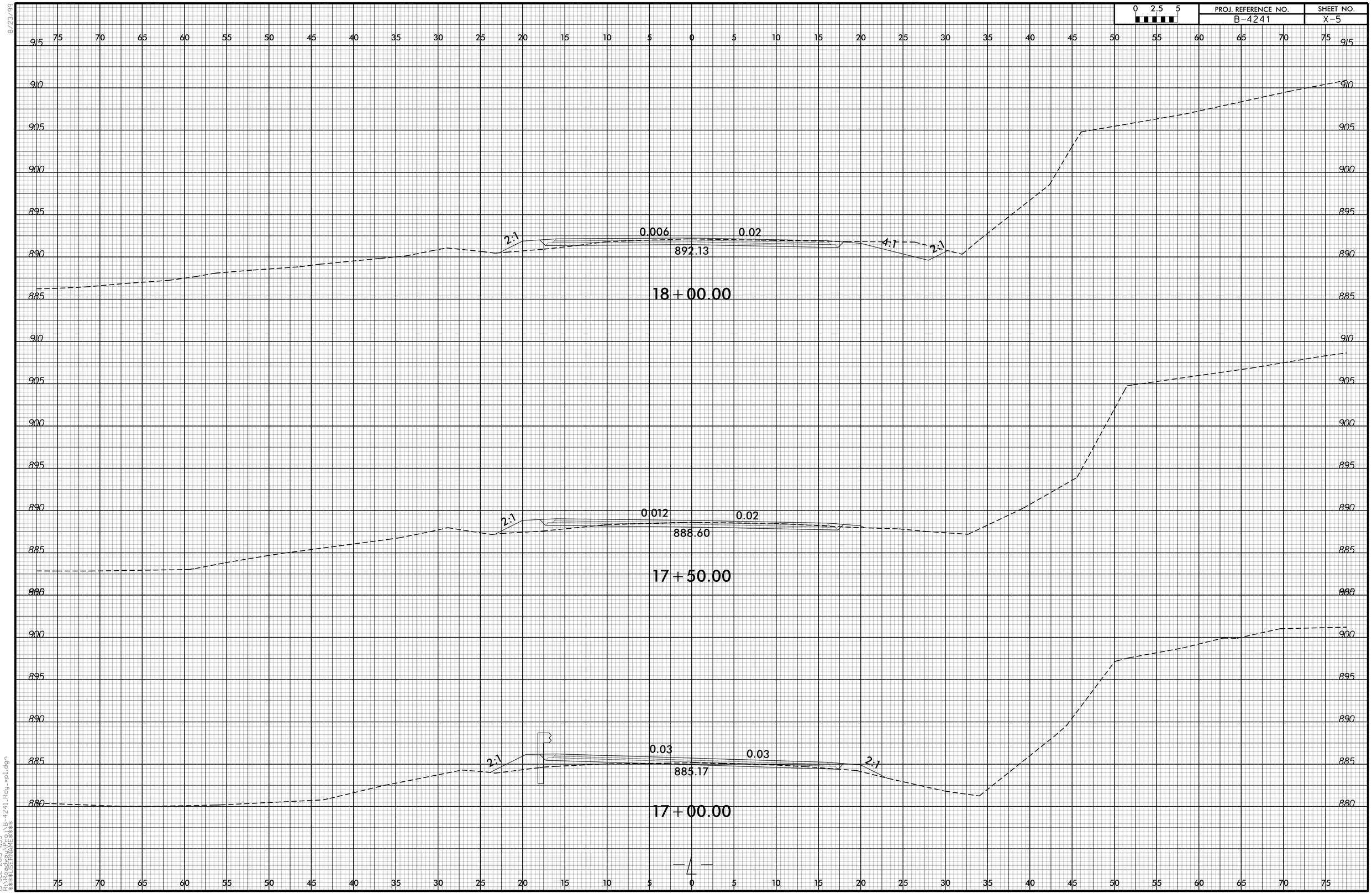

8/23/99

15-JUL-2013 11:35
R:\Roadway\Proj\B-4241_Rdy_xpl.dgn
$$$$USERNAME$$$$

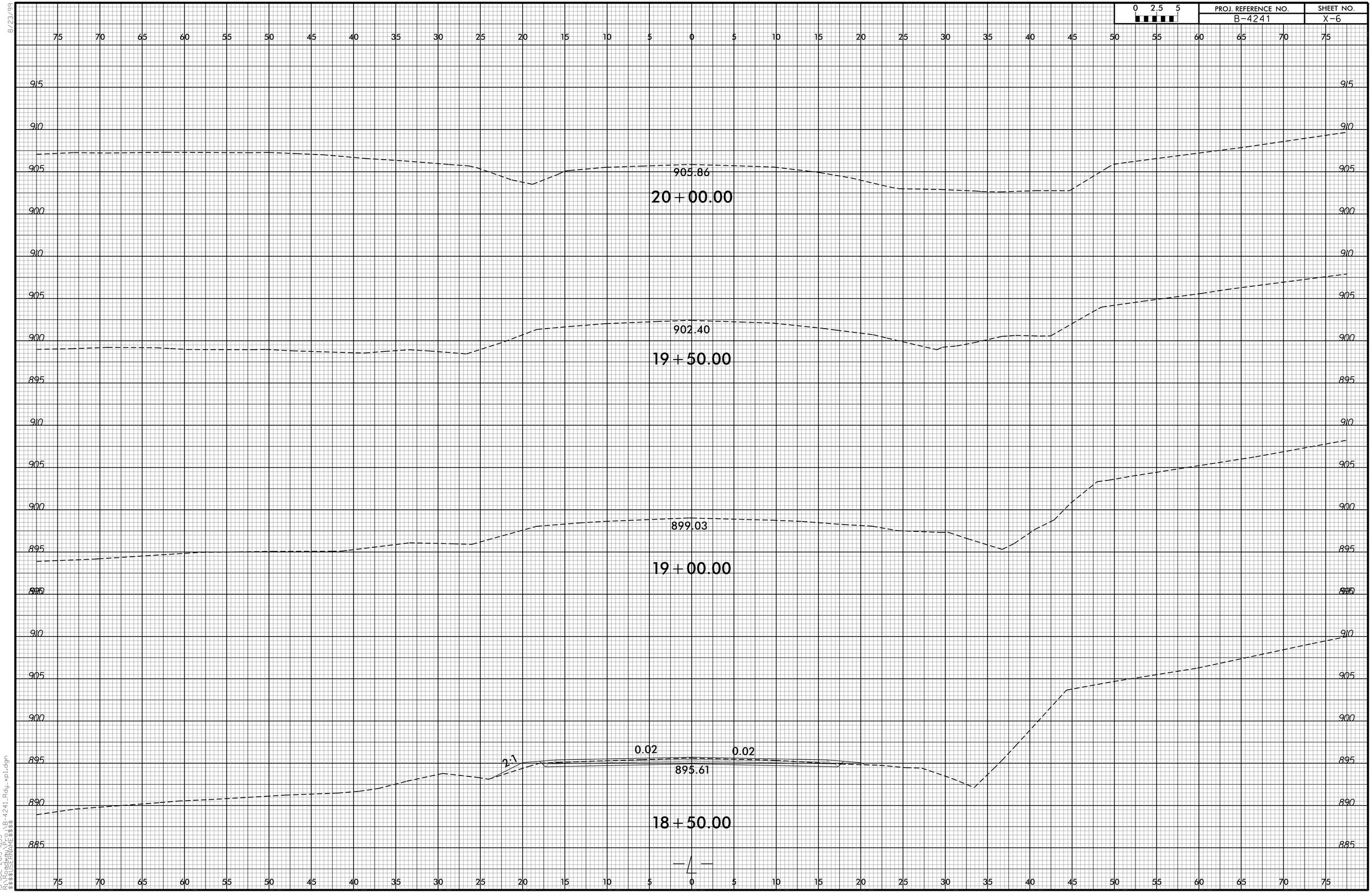

8/23/99
15-JUL-2013 16:35
R:\Roadway\Proj\B-4241_Rdy_xpl.dgn
$$$$USERNAME$$$$

09/08/99

TIP PROJECT: B-4241

CONTRACT: DN00249

CULVERT

STATE OF NORTH CAROLINA
DIVISION OF HIGHWAYS

POLK COUNTY

LOCATION: REPLACE BRIDGE 24 OVER HOOPER CREEK ON SR 1520 (LANDRUM ROAD)

TYPE OF WORK: GRADING, DRAINAGE, PAVING, AND CULVERT

STATE	STATE PROJECT REFERENCE NO.	SHEET NO.	TOTAL SHEETS
N.C.			

STATE PROJ. NO.	F. A. PROJ. NO.	DESCRIPTION
33584.1.1	BRZ-1520(7)	P.E.
33584.2.1	BRZ-1520(7)	R/W, UTIL.
33584.3.1	BRZ-1520(7)	CONST.

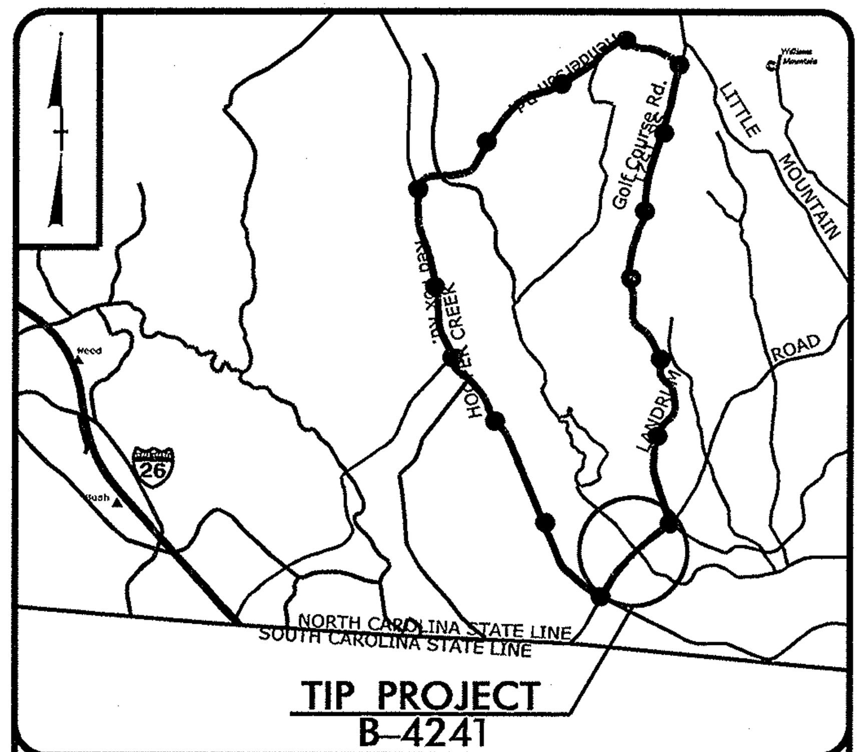

VICINITY MAP

OFFSITE DETOUR

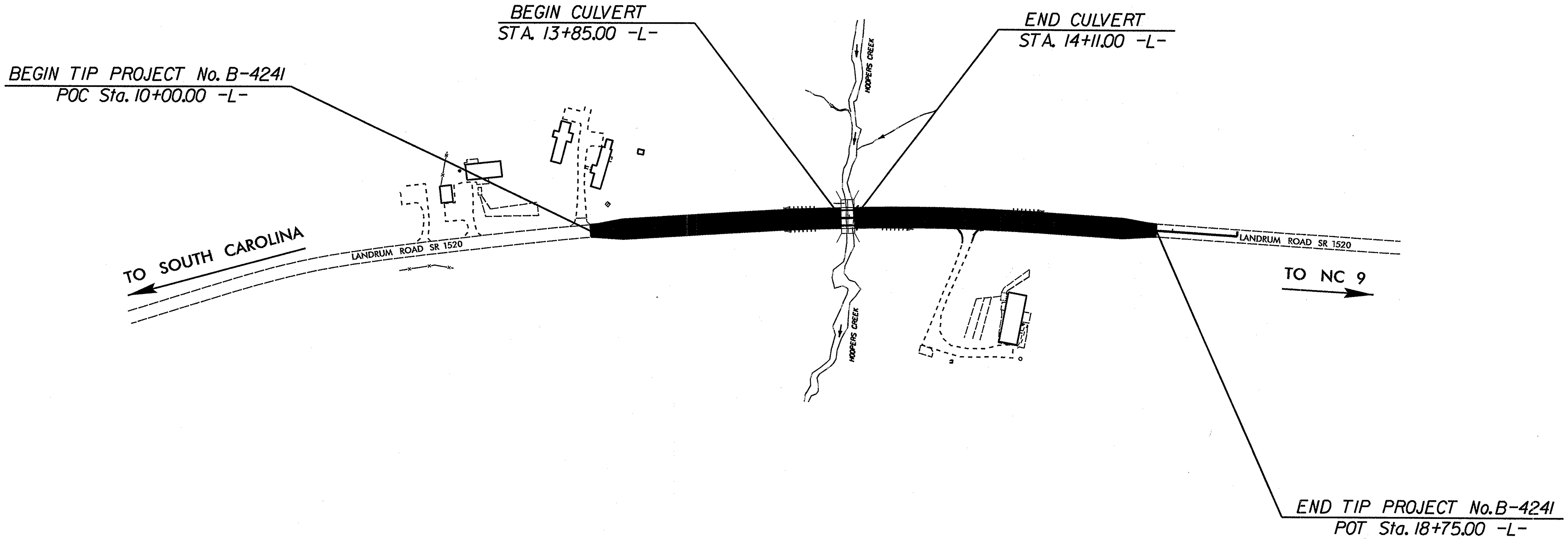

DESIGN DATA

ADT 2013 = 4,157 VPD
ADT 2038 = 6,330 VPD
DHV = 10%
D = 60%
* T = 5%
V = 45 MPH
* (TTST 2% + DUAL 3%)

FUNCTIONAL CLASS. = RURAL LOCAL

SUB-REGIONAL TIER

PROJECT LENGTH

LENGTH OF ROADWAY TIP PROJECT B-4241 = 0.161 MI.

LENGTH OF STRUCTURE TIP PROJECT B-4241 = 0.005 MI.

TOTAL LENGTH OF TIP PROJECT B-4241 = 0.166 MI.

DIVISION OF HIGHWAYS
1000 BIRCH RIDGE DRIVE
RALEIGH, N.C. 27610

2012 STANDARD SPECIFICATIONS

LETTING DATE:
AUGUST 20, 2013

Q.H. NGUYEN, P.E.
PROJECT ENGINEER

MARC G. CHEEK, P.E.
PROJECT DESIGN ENGINEER

STRUCTURES MANAGEMENT UNIT
1000 BIRCH RIDGE DRIVE
RALEIGH, N.C. 27610

DIVISION OF HIGHWAYS
STATE OF NORTH CAROLINA

P.E.
STATE HIGHWAY DESIGN ENGINEER

DEPARTMENT OF TRANSPORTATION
FEDERAL HIGHWAY ADMINISTRATION

DIVISION ADMINISTRATOR DATE

03-JUN-2013 11:10
$$$$$$$$$$$$$$$DGN$$$$$$$$$$$$$$$$
vnguyen

F. A. PROJECT NO.: BRZ-1520(7)

BENCHMARK #1: SPIKE IN BASE OF 13" GUM TREE, STA. 14+25.50 -L-, 104.8' LT., ELEV. 869.2

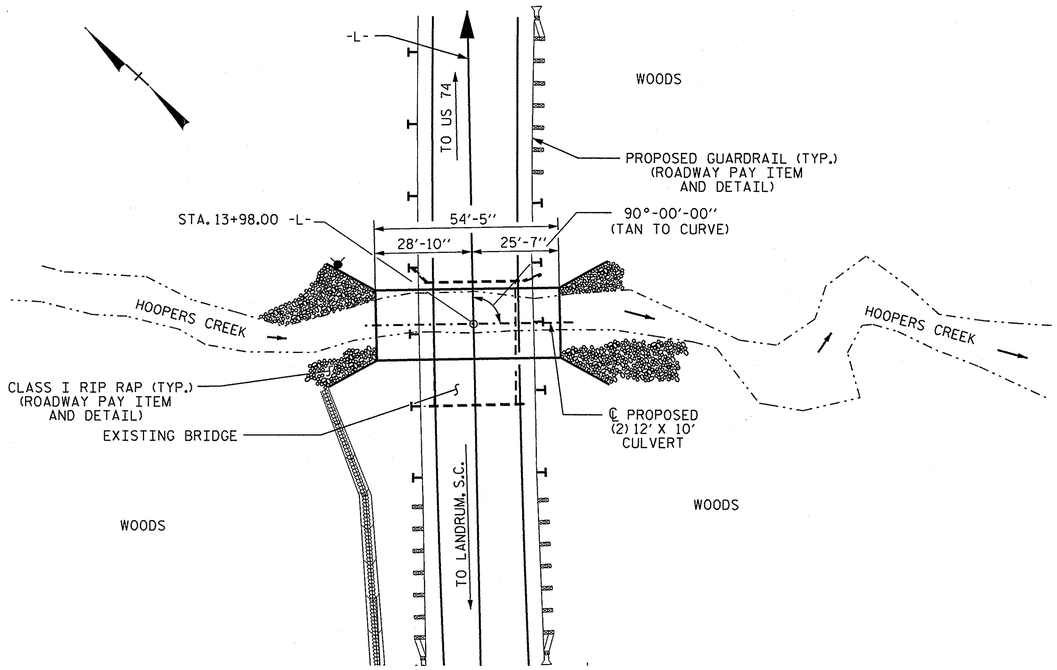

LOCATION SKETCH

ROADWAY DATA

GRADE POINT ELEV. @ STATION 13+98.00 -L-	=	873.44
BED ELEV. @ STATION 13+98.00 -L-	=	859.9
ROADWAY SLOPES	=	2 : 1

HYDRAULIC DATA

DESIGN DISCHARGE	=	900 C.F.S.
FREQUENCY OF DESIGN FLOOD	=	25 YEARS
DESIGN HIGH WATER ELEVATION	=	867.4
DRAINAGE AREA	=	2.6 SQ. MI.
BASE DISCHARGE (Q100)	=	1350 C.F.S.
BASE HIGH WATER ELEVATION	=	869.4

OVERTOPPING FLOOD DATA

OVERTOPPING DISCHARGE	=	2000 C.F.S.
FREQUENCY OF OVERTOPPING FLOOD	=	500 YEARS
OVERTOPPING FLOOD ELEVATION	=	871.3

TOTAL STRUCTURE QUANTITIES

CLASS A CONCRETE			
BARREL @ 2.916 CY/FT	158.7	C.Y.	
WINGS, ETC.	36.4	C.Y.	
TOTAL	195.1	C.Y.	
REINFORCING STEEL			
BARREL	20,871	LBS.	
WINGS, ETC.	2,427	LBS.	
TOTAL	23,298	LBS.	
CULVERT EXCAVATION	LUMP SUM		
FOUNDATION COND. MAT'L.	100 TONS		
REMOVAL OF EXISTING STRUCTURE	LUMP SUM		

NOTES

ASSUMED LIVE LOAD HL-93 OR ALTERNATE LOADING.

DESIGN FILL------2.6'

FOR OTHER DESIGN DATA AND NOTES, SEE STANDARD NOTES SHEET.

3" Ø WEEP HOLES INDICATED TO BE IN ACCORDANCE WITH THE SPECIFICATIONS.

CONCRETE IN CULVERTS TO BE POURED IN THE FOLLOWING ORDER:

1. PHASE I WING FOOTINGS AND FLOOR SLAB INCLUDING 4" OF PHASE I VERTICAL WALLS.
2. THE REMAINING PORTIONS OF PHASE I WALLS AND PHASE I WINGS FULL HEIGHT.
3. PHASE II WING FOOTINGS AND FLOOR SLAB INCLUDING 4" OF PHASE II VERTICAL WALLS.
4. THE REMAINING PORTIONS OF PHASE II WALLS AND PHASE II WINGS FULL HEIGHT.
5. ROOF SLAB AND HEADWALLS.

THE RESIDENT ENGINEER SHALL CHECK THE LENGTH OF CULVERT BEFORE STAKING IT OUT TO MAKE CERTAIN THAT IT WILL PROPERLY TAKE CARE OF THE FILL.

DIMENSIONS FOR WING LAYOUT AS WELL AS ADDITIONAL REINFORCING STEEL EMBEDDED IN BARREL ARE SHOWN ON WING SHEET.

AT THE CONTRACTOR'S OPTION, HE MAY SPLICE THE VERTICAL REINFORCING STEEL IN THE INTERIOR FACE OF EXTERIOR WALL AND BOTH FACES OF INTERIOR WALLS ABOVE LOWER WALL CONSTRUCTION JOINT. THE SPLICE LENGTH SHALL BE AS PROVIDED IN THE SPLICE LENGTH CHART SHOWN ON THE PLANS. EXTRA WEIGHT OF STEEL DUE TO THE SPLICES SHALL BE PAID FOR BY THE CONTRACTOR.

AT THE CONTRACTOR'S OPTION HE MAY SUBMIT, TO THE ENGINEER FOR APPROVAL, DESIGN AND DETAIL DRAWINGS FOR A PRECAST REINFORCED CONCRETE BOX CULVERT IN LIEU OF THE CAST-IN-PLACE CULVERT SHOWN ON THE PLANS. THE DESIGN SHALL PROVIDE THE SAME SIZE AND NUMBER OF BARRELS AS USED ON THE CAST-IN-PLACE DESIGN. FOR OPTIONAL PRECAST REINFORCED CONCRETE BOX CULVERT, SEE SPECIAL PROVISIONS.

REMOVAL OF THE EXISTING BRIDGE SHALL BE PERFORMED SO AS NOT TO ALLOW DEBRIS TO FALL INTO THE WATER. THE CONTRACTOR SHALL REMOVE THE BRIDGE AND SUBMIT PLANS FOR DEMOLITION IN ACCORDANCE WITH ARTICLE 402-2 OF THE STANDARD SPECIFICATIONS.

FOR GROUT FOR STRUCTURES, SEE SPECIAL PROVISIONS.

FOR CULVERT DIVERSION DETAILS AND PAY ITEM, SEE EROSION CONTROL PLANS.

FOR SUBMITTAL OF WORKING DRAWINGS, SEE SPECIAL PROVISIONS.

FOR FALSEWORK AND FORMWORK, SEE SPECIAL PROVISIONS.

FOR CRANE SAFETY, SEE SPECIAL PROVISIONS.

THE CONTRACTOR SHALL PROVIDE INDEPENDENT ASSURANCE SAMPLES OF REINFORCING STEEL AS FOLLOWS: FOR PROJECTS REQUIRING UP TO 400 TONS OF REINFORCING STEEL, ONE 30 INCH SAMPLE OF EACH SIZE BAR USED, AND FOR PROJECTS REQUIRING OVER 400 TONS OF REINFORCING STEEL, TWO 30 INCH SAMPLES OF EACH SIZE BAR USED. THE BARS FROM WHICH THE SAMPLES ARE TAKEN MUST THEN BE SPLICED WITH REPLACEMENT BARS OF THE SIZE AND LENGTH OF THE SAMPLE, PLUS A MINIMUM LAP SPLICE OF THIRTY BAR DIAMETERS. PAYMENT FOR THE SAMPLES OF REINFORCING STEEL SHALL BE CONSIDERED INCIDENTAL TO VARIOUS PAY ITEMS.

THE EXISTING 2 SPAN BRIDGE (1 @ 18'-6", 1 @ 17'-0") WITH A ROADWAY WIDTH OF 22'-3" AND A 3½" ASPHALT WEARING SURFACE ON A TIMBER FLOOR ON 10 LINES OF STEEL I-BEAMS AND WITH A SUBSTRUCTURE CONSISTING OF TIMBER CAPS/TIMBER PILES AT THE END BENTS AND BENT, AND LOCATED AT THE SITE OF THE PROPOSED STRUCTURE SHALL BE REMOVED.

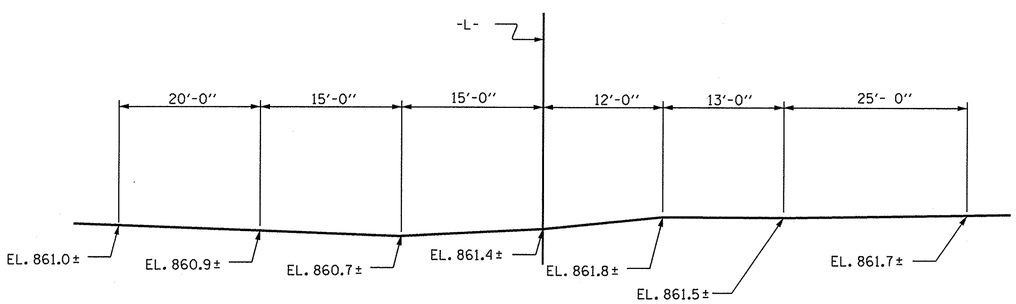

PROFILE ALONG ℄ CULVERT

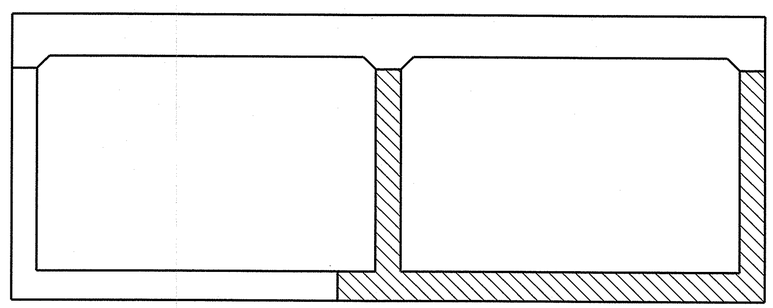

CONSTRUCTION PHASING

(LOOKING DOWNSTREAM)

PHASE I CONSTRUCTION

PHASE II CONSTRUCTION

NORTH CAROLINA PROFESSIONAL SEAL 13014 ENGINEER QUANG H. NGUYEN
Quang H. Nguyen 6-3-13

NORTH CAROLINA PROFESSIONAL SEAL 20125 ENGINEER MARSHALL A. LEBLANC, JR.
6-3-13

PROJECT NO. B-4241
POLK COUNTY
STATION: 13+98.00 -L-

SHEET 1 OF 7 REPLACES BRIDGE No. 24

STATE OF NORTH CAROLINA
DEPARTMENT OF TRANSPORTATION
RALEIGH

DOUBLE 12 FT. X 10 FT.
CONCRETE BOX CULVERT
90° SKEW

REVISIONS						SHEET NO.
NO.	BY:	DATE:	NO.	BY:	DATE:	C-1
1			3			TOTAL SHEETS
2			4			7

ADDED NOV. 1, 1990

ASSEMBLED BY : V.X. NGUYEN DATE : 5-8-13
CHECKED BY : M.C. CHEEK DATE : 5-22-13
DESIGN ENGINEER OF RECORD: M.A. LEBLANC DATE : 5-31-13

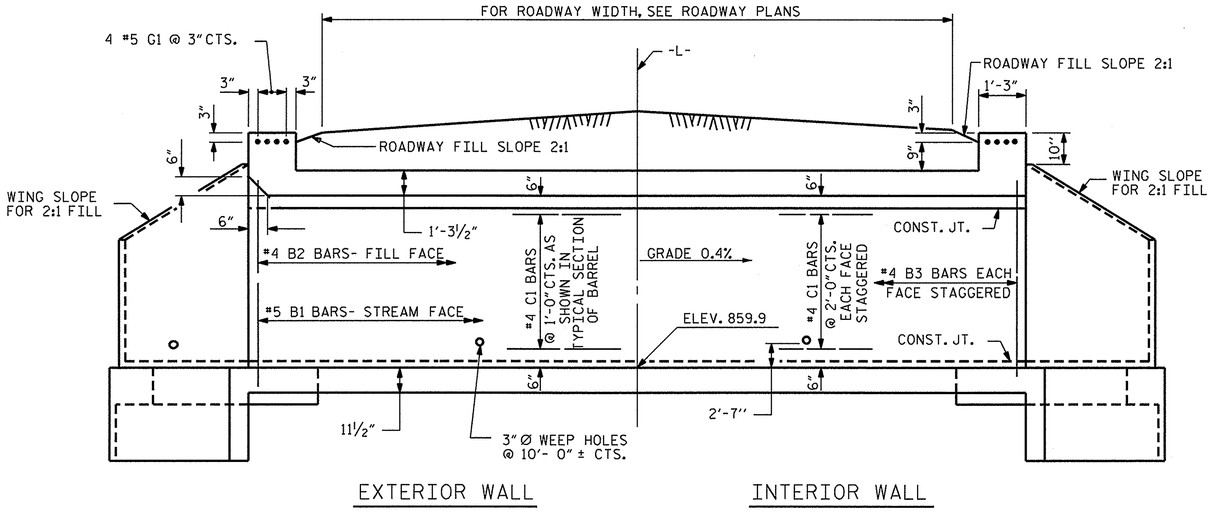

CULVERT SECTION NORMAL TO ROADWAY

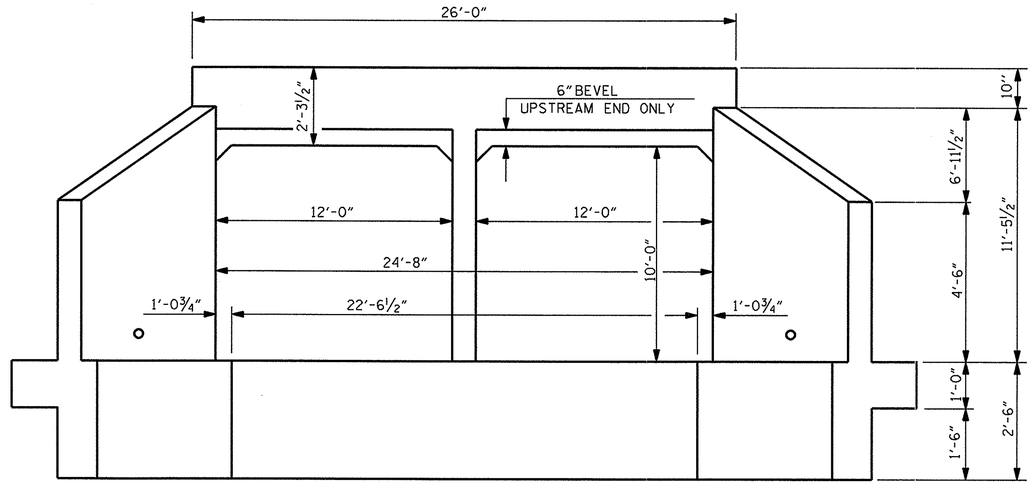

END ELEVATION

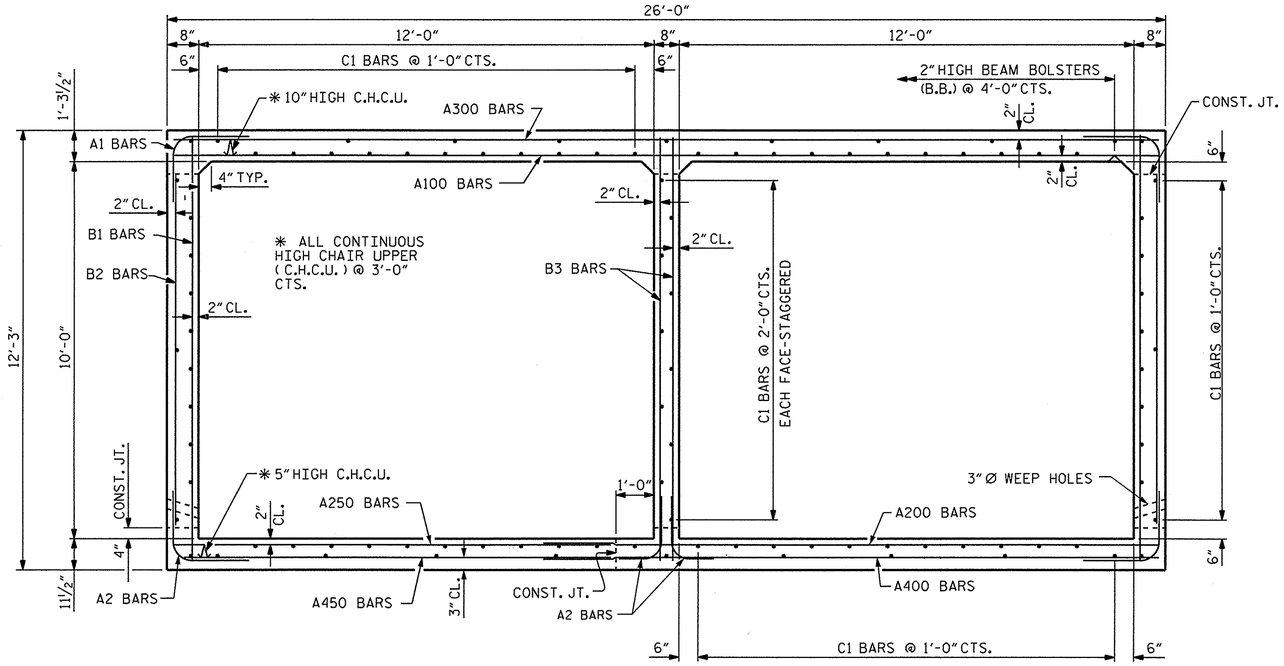

RIGHT ANGLE SECTION OF BARREL

THERE ARE 98 "C" BARS IN SECTION OF BARREL.
(LOOKING DOWNSTREAM)

PROJECT NO. B-4241
POLK COUNTY
STATION: 13+98.00 -L-

SHEET 2 OF 7

STATE OF NORTH CAROLINA
DEPARTMENT OF TRANSPORTATION
RALEIGH

DOUBLE 12 FT. X 10 FT. CONCRETE BOX CULVERT 90° SKEW

NORTH CAROLINA PROFESSIONAL SEAL 20125 ENGINEER MARSHALL G. CHEEK, JR.
6-3-13

REVISIONS								SHEET NO.
NO.	BY:	DATE:	NO.	BY:	DATE:			C-2
1			3					TOTAL SHEETS
2			4					7

REVISED 11-19-99 BY M.M. CHECKED BY R.W.W.
REDRAWN NOV. 1990 BY TSS CHECKED BY ARB

ASSEMBLED BY : V.X. NGUYEN DATE : 5-8-13
CHECKED BY : M.G. CHEEK DATE : 5-22-13
DESIGN ENGINEER OF RECORD: M.A. LEBLANC DATE : 5-31-13

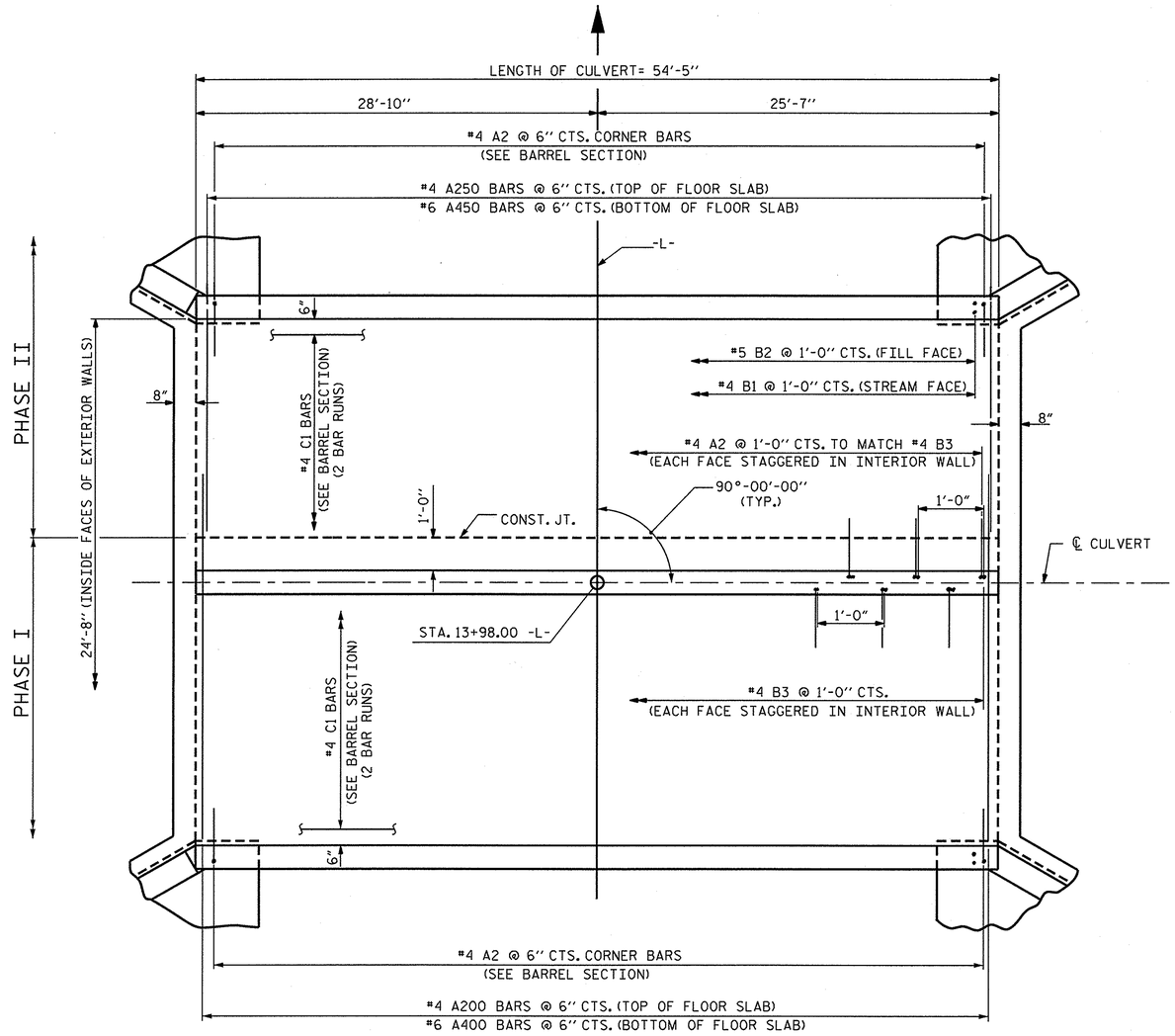

PLAN OF FLOOR SLAB

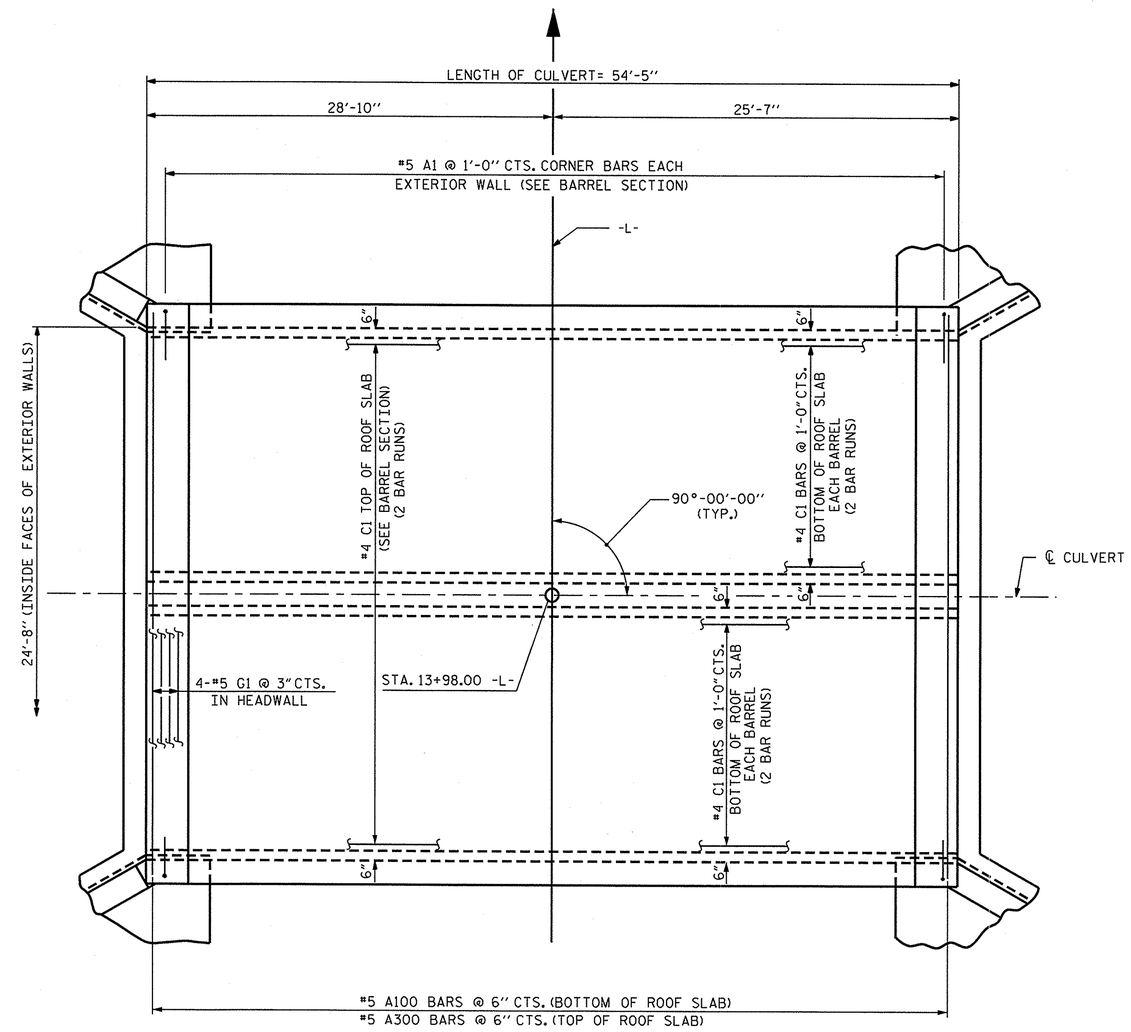

PLAN OF ROOF SLAB

PROJECT NO. B-4241

POLK COUNTY

STATION: 13+98.00 -L-

SHEET 3 OF 7

STATE OF NORTH CAROLINA
DEPARTMENT OF TRANSPORTATION
RALEIGH

DOUBLE 12 FT. X 10 FT. CONCRETE BOX CULVERT 90° SKEW

NORTH CAROLINA PROFESSIONAL SEAL 20125 ENGINEER MARSHALL A. LEBLANC, JR.
6-3-13

REVISIONS						SHEET NO.
NO.	BY:	DATE:	NO.	BY:	DATE:	C-3
1			3			TOTAL SHEETS
2			4			7

DRAWN BY : V.X. NGUYEN DATE : 5-14-13
CHECKED BY : M.G. CHEEK DATE : 5-22-13
DESIGN ENGINEER OF RECORD: M.A. LEBLANC DATE : 5-31-13

03-JUN-2013 10:52
R:\Structures\Plans\b4241\vnguyen\B-4241_SD_CU.dgn
vnguyen

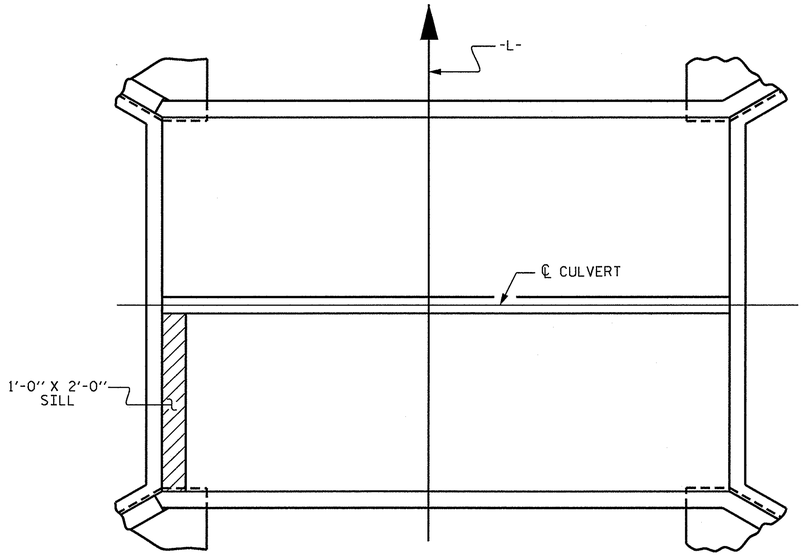

PLAN OF SILL LOCATIONS

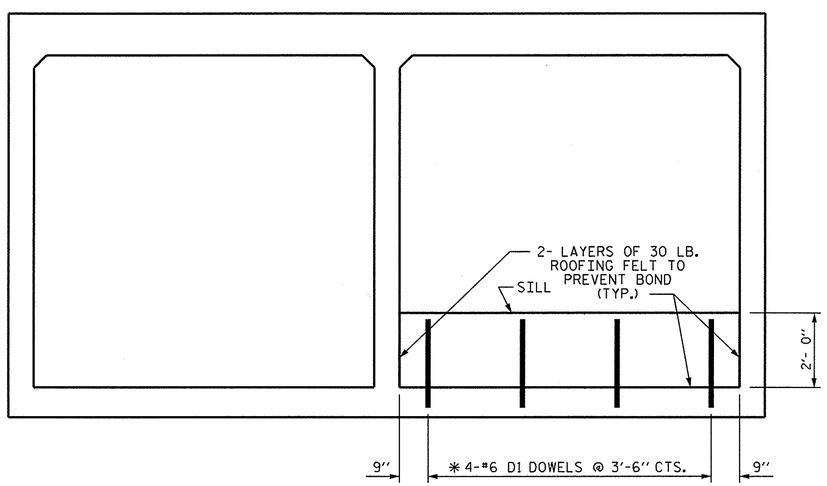

ELEVATION
(LOOKING DOWNSTREAM)

CULVERT SILL DETAILS

* D1 DOWELS MAY BE PUSHED INTO GREEN CONCRETE AFTER SLAB HAS BEEN FLOAT FINISHED.

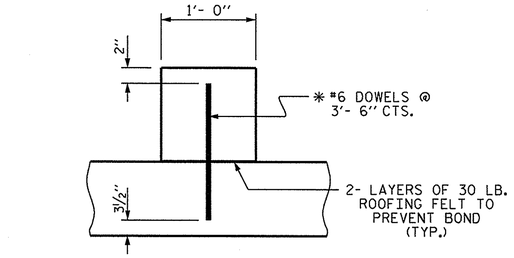

SECTION THROUGH SILL

BAR TYPE

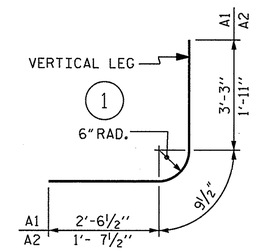

BAR DIMENSIONS ARE OUT TO OUT

SPLICE LENGTH CHART

BAR	SIZE	LENGTH
A200	#4	1'-9"
A400	#6	2'-9"
C1	#4	1'-11"

BAR SCHEDULE

BAR	NO.	SIZE	TYPE	LENGTH	WEIGHT
A1	110	#5	1	6'-7"	755
A2	328	#4	1	4'-4"	949
A100	109	#5	STR	25'-7"	2908
A200	109	#4	STR	16'-1"	1171
A250	109	#4	STR	11'-4"	825
A300	109	#5	STR	25'-7"	2908
A400	109	#6	STR	17'-1"	2797
A450	109	#6	STR	11'-4"	1855
B1	110	#4	STR	11'-9"	863
B2	110	#5	STR	9'-4"	1071
B3	110	#4	STR	11'-9"	863
C1	196	#4	STR	28'-1"	3677
D1	4	#6	STR	2'-6"	15
G1	8	#5	STR	25'- 8"	214

REINFORCING STEEL = 20,871 LBS.

PROJECT NO. B-4241
POLK COUNTY
STATION: 13+98.00 -L-

SHEET 4 OF 7

STATE OF NORTH CAROLINA
DEPARTMENT OF TRANSPORTATION
RALEIGH

DOUBLE 12 FT. X 10 FT.
CONCRETE BOX CULVERT
90° SKEW

NORTH CAROLINA PROFESSIONAL SEAL 20125 ENGINEER MARSHALL G. CHEEK, JR.
6-3-13

REVISIONS						SHEET NO.
NO.	BY:	DATE:	NO.	BY:	DATE:	C-4
1			3			TOTAL SHEETS
2			4			7

DRAWN BY : V.X. NGUYEN DATE : 5-14-13
CHECKED BY : M.G. CHEEK DATE : 5-22-13

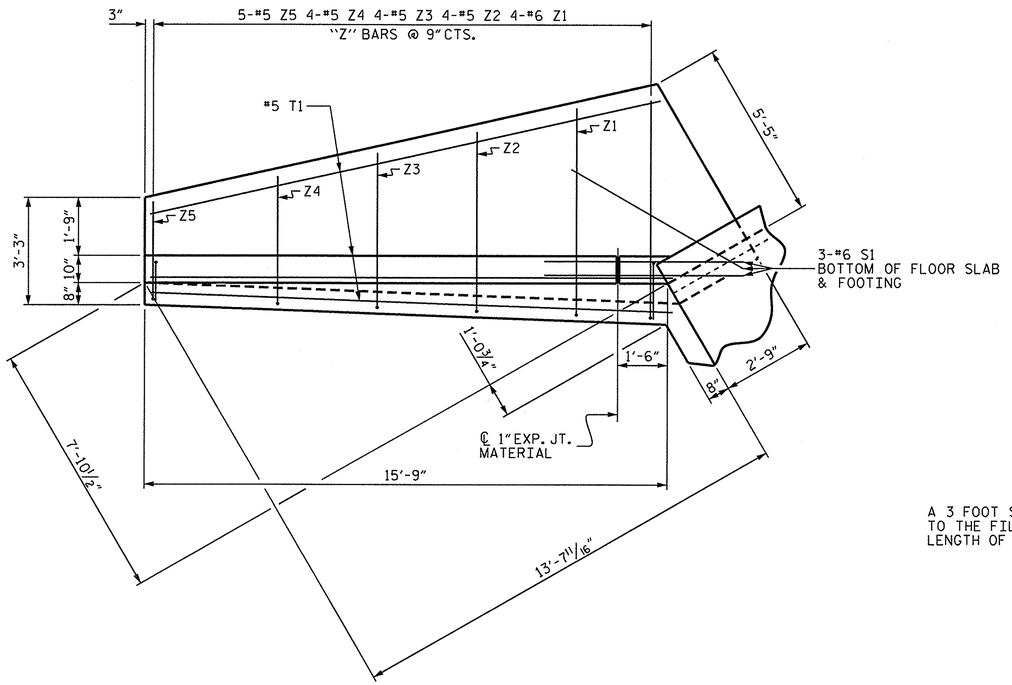

PLAN

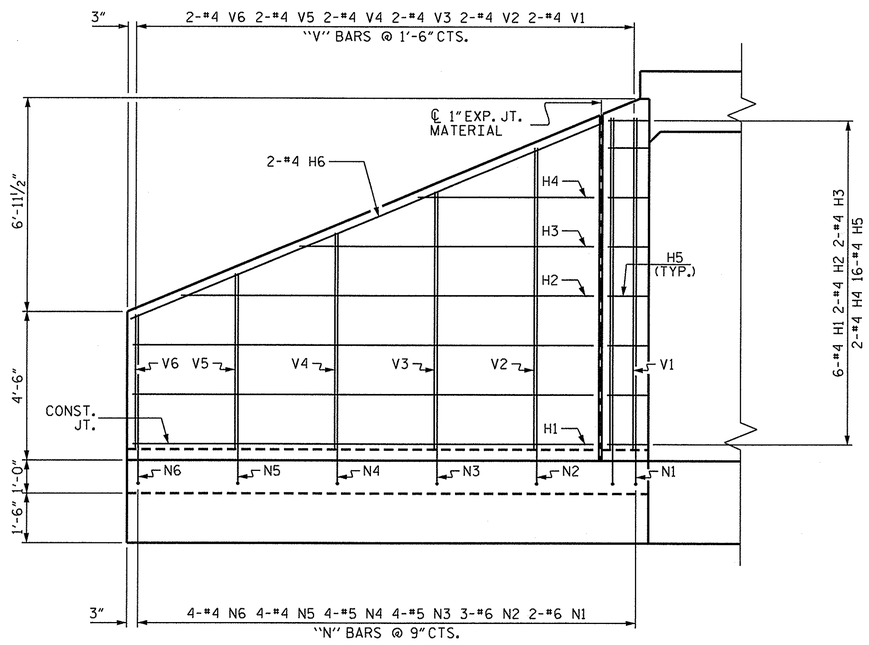

ELEVATION

NOTES

A 3 FOOT STRIP OF FILTER FABRIC SHALL BE ATTACHED TO THE FILL FACE OF THE WING COVERING THE ENTIRE LENGTH OF THE EXPANSION JOINT.

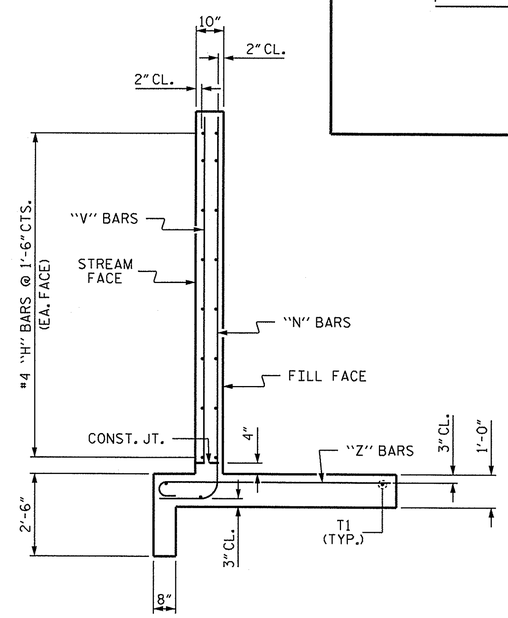

TYPICAL WING SECTION

BAR TYPES

ALL BAR DIMENSIONS ARE OUT TO OUT.

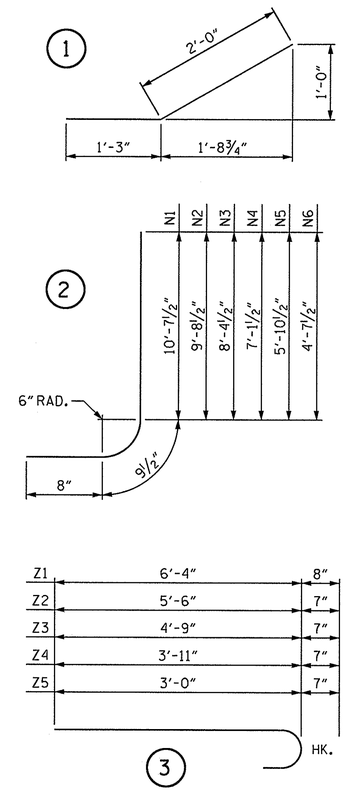

BILL OF MATERIAL

BAR	NO.	SIZE	TYPE	LENGTH	WEIGHT
H1	24	#4	STR	13'-10"	222
H2	8	#4	STR	12'-5"	66
H3	8	#4	STR	8'-10"	47
H4	8	#4	STR	5'-4"	29
H5	64	#4	1	3'-3"	139
H6	8	#4	STR	15'-5"	82
N1	8	#6	2	12'-1"	146
N2	12	#6	2	11'-2"	201
N3	16	#5	2	9'-10"	164
N4	16	#5	2	8'-7"	143
N5	16	#4	2	7'-4"	78
N6	16	#4	2	6'-1"	65
S1	12	#6	STR	6'-0"	108
T1	12	#5	STR	15'-9"	197
V1	8	#4	STR	10'-1"	54
V2	8	#4	STR	9'-2"	49
V3	8	#4	STR	7'-10"	42
V4	8	#4	STR	6'-7"	35
V5	8	#4	STR	5'-4"	29
V6	8	#4	STR	4'-1"	22
Z1	16	#6	3	7'-0"	168
Z2	16	#5	3	6'-1"	102
Z3	16	#5	3	5'-4"	89
Z4	16	#5	3	4'-6"	75
Z5	20	#5	3	3'-7"	75

REINFORCING STEEL
FOR 4 WINGS 2427 LBS.

CLASS A CONCRETE
4 WINGS 31.2 C.Y.
2 HEADWALLS 2.4 C.Y.
END CURTAIN WALLS 2.8 C.Y.
TOTAL 36.4 C.Y.

PROJECT NO. B-4241
POLK COUNTY
STATION: 13+98.00 -L-

SHEET 5 OF 7

STATE OF NORTH CAROLINA
DEPARTMENT OF TRANSPORTATION
RALEIGH

STANDARD WINGS FOR CONCRETE BOX CULVERT

H = 10'-0" SLOPE = 2:1
90° SKEW

NORTH CAROLINA PROFESSIONAL SEAL 20125 ENGINEER MARSHALL G. CHEEK, JR. 6-3-13

REVISIONS						SHEET NO.
NO.	BY:	DATE:	NO.	BY:	DATE:	C-5
1			3			TOTAL SHEETS
2			4			7

ASSEMBLED BY : V.X. NGUYEN DATE : 5-10-13
CHECKED BY : M.G. CHEEK DATE : 5-22-13
DRAWN BY : CCJ 10/99
CHECKED BY : RWW 03/00

03-JUN-2013 10:52
R:\Structures\Plans\b4241\vnguyen\B-4241_SD_CU.dgn
vnguyen

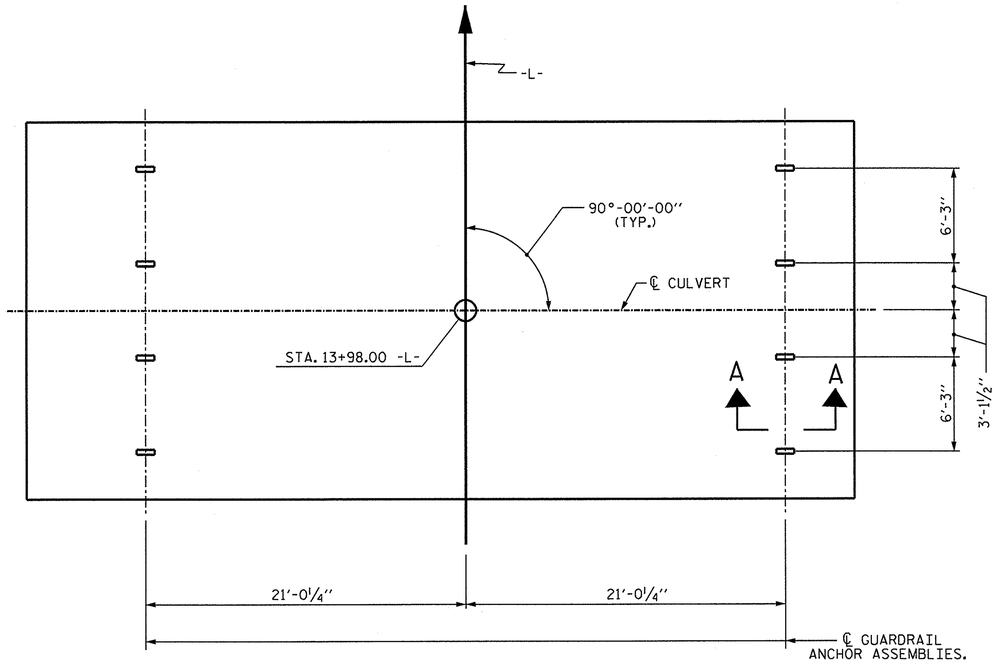

PLAN

SHOWING : GUARDRAIL ANCHOR ASSEMBLY SPACING.

NOTES

THE GUARDRAIL ANCHOR ASSEMBLY FOR CULVERTS SHALL CONSIST OF THE FOLLOWING COMPONENTS :

A. FERRULES SHALL BE MADE FROM STEEL MEETING THE REQUIREMENTS OF AASHTO M169, GRADE 12L14 AND SHALL HAVE A MINIMUM LENGTH OF THREADS OF 2½".

B. 4 - 1" Ø X 2 ¼" BOLTS WITH WASHERS. BOLTS SHALL CONFORM TO THE REQUIREMENTS OF ASTM A307. BOLTS AND WASHERS SHALL BE GALVANIZED. (AT THE CONTRACTOR'S OPTION, STAINLESS STEEL BOLTS AND WASHERS MAY BE USED AS AN ALTERNATE FOR THE 1" Ø X 2¼" GALVANIZED BOLTS AND WASHERS. THEY SHALL CONFORM TO OR EXCEED THE MECHANICAL REQUIREMENTS OF ASTM A307. THE USE OF THIS ALTERNATE SHALL BE APPROVED BY THE ENGINEER.)

C. WIRE STRUTS SHOWN IN THE GUARDRAIL ANCHOR ASSEMBLY FOR CULVERTS DETAIL ARE MINIMUM ALLOWABLE SIZE AND SHALL HAVE A MINIMUM TENSILE STRENGTH OF 100,000 P.S.I. AS AN OPTION, A 7/16" Ø WIRE STRUT WITH A MINIMUM TENSILE STRENGTH OF 90,000 PSI IS ACCEPTABLE.

GUARDRAIL ANCHOR ASSEMBLY WITH BOLTS SHALL BE ASSEMBLED IN THE SHOP. BOLT THREADS MAY BE RECUT AS NECESSARY TO INSURE FIT.

THE COST OF THE GUARDRAIL ANCHOR ASSEMBLY FOR CULVERTS COMPLETE IN PLACE, SHALL BE INCLUDED IN THE UNIT CONTRACT PRICE BID FOR CLASS "A" CONCRETE.

FERRULES TO BE PLUGGED DURING POURING OF SLAB AS RECOMMENDED BY THE MANUFACTURER.

AT THE CONTRACTOR'S OPTION, FERRULES WITH OPEN OR CLOSED ENDS MAY BE USED.

PAYMENT FOR GUARDRAIL, POSTS, AND POST BASE PLATES IS INCLUDED IN ROADWAY PAY ITEMS.

SLAB REINFORCING STEEL MAY BE SHIFTED AS NECESSARY TO CLEAR GUARDRAIL ANCHOR ASSEMBLY. CARE SHOULD BE TAKEN TO KEEP THE SHIFTING OF REINFORCING STEEL TO A MINIMUM.

THE CONTRACTOR MAY USE ADHESIVELY ANCHORED ANCHOR BOLTS IN PLACE OF GUARDRAIL ANCHOR ASSEMBLY. LEVEL TWO FIELD TESTING IS REQUIRED, AND THE YIELD LOAD OF THE 1" Ø BOLT IS 21.8 KIPS. FOR ADHESIVELY ANCHORED ANCHOR BOLTS OR DOWELS, SEE STANDARD SPECIFICATIONS.

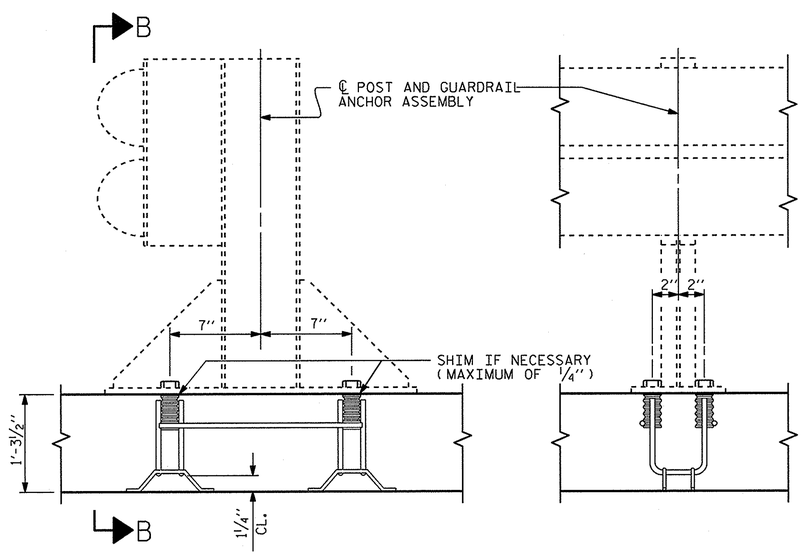

SECTION A-A

SECTION B-B

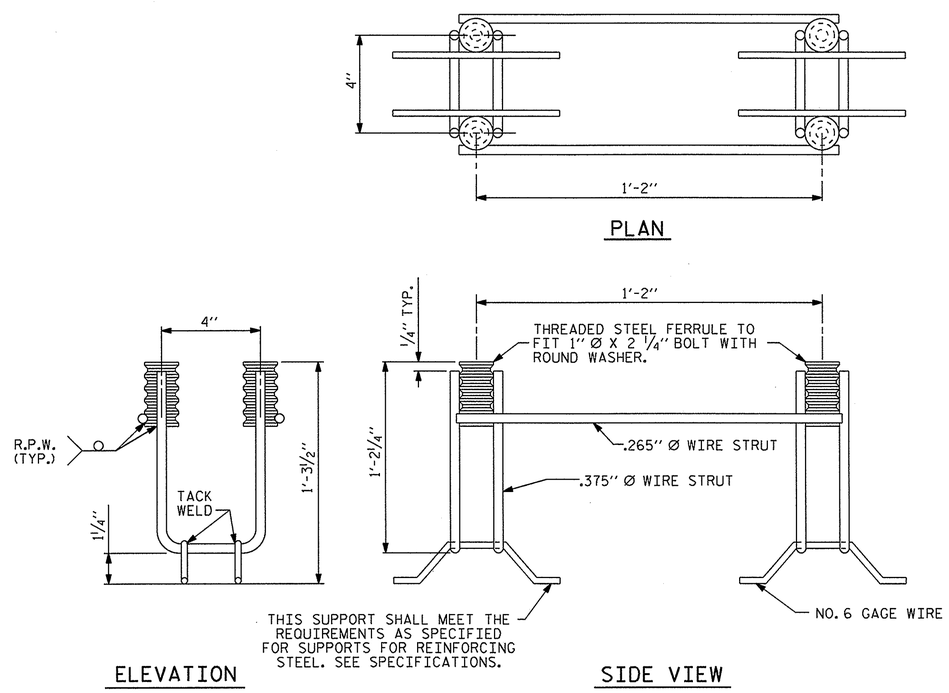

GUARDRAIL ANCHOR ASSEMBLY FOR CULVERTS

PROJECT NO. B-4241

POLK COUNTY

STATION: 13+98.00 -L-

SHEET 6 OF 7

STATE OF NORTH CAROLINA
DEPARTMENT OF TRANSPORTATION
RALEIGH

STANDARD

ANCHORAGE DETAILS FOR GUARDRAIL ANCHOR ASSEMBLY FOR CULVERTS

NORTH CAROLINA PROFESSIONAL SEAL 20125 ENGINEER MARSHALL G. CHEEK, JR.
6-3-13

ASSEMBLED BY : V.X. NGUYEN	DATE : 5-30-13		
CHECKED BY : M.G. CHEEK	DATE : 5-31-13		
DRAWN BY : FCJ 6/88	REV. 5/7/03	RWW/JTE	
CHECKED BY : ARB 6/88	REV. 5/1/06R	KMM/GM	
	REV. 10/1/11	MAA/GM	

REVISIONS						SHEET NO.
NO.	BY:	DATE:	NO.	BY:	DATE:	C-6
1			3			TOTAL SHEETS
2			4			7

03-JUN-2013 10:53
R:\Structures\Plans\b4241\vnguyen\B-4241_SD_CU.dgn
vnguyen

LOAD AND RESISTANCE FACTOR RATING (LRFR) SUMMARY FOR REINFORCED CONCRETE BOX CULVERTS

LEVEL		VEHICLE	WEIGHT (W) (TONS)	CONTROLLING LOAD RATING (#)	MINIMUM RATING FACTORS (RF)	TONS = W × RF	STRENGTH I LIMIT STATE									COMMENT NUMBER
							LIVE-LOAD FACTORS (γ_{LL})	MOMENT				SHEAR				
								RATING FACTOR	BOX NO.	ELEMENT TYPE	DISTANCE FROM LEFT END OF ELEMENT (ft)	RATING FACTOR	BOX NO.	ELEMENT TYPE	DISTANCE FROM LEFT END OF ELEMENT (ft)	
DESIGN LOAD RATING		HL-93 (INVENTORY)	N/A	1	1.02	--	1.75	1.35	1	TOP SLAB	5.07	1.02	1	TOP SLAB	11.34	
		HL-93 (OPERATING)	N/A		1.32	--	1.35	1.75	1	TOP SLAB	5.07	1.32	1	TOP SLAB	11.34	
		HS-20 (INVENTORY)	36.000	2	1.12	40.34	1.75	1.48	1	BOT. CORNER WALL	10.85	1.12	1	BOTTOM SLAB	11.64	
		HS-20 (OPERATING)	36.000		1.45	52.30	1.35	1.92	1	BOT. CORNER WALL	10.85	1.45	1	BOTTOM SLAB	11.64	
LEGAL LOAD RATING	SINGLE VEHICLE (SV)	SNSH	13.500		2.38	32.06	1.40	2.81	1	TOP SLAB	5.38	2.38	1	TOP SLAB	11.34	
		SNGARBS2	20.000		2.22	44.48	1.40	2.40	1	BOT. CORNER WALL	10.85	2.22	1	TOP SLAB	11.34	
		SNAGRIS2	22.000		2.03	44.74	1.40	2.31	1	BOT. CORNER WALL	10.85	2.03	1	BOTTOM SLAB	11.64	
		SNCOTTS3	27.250		1.27	34.72	1.40	1.69	1	TOP SLAB	5.07	1.27	1	TOP SLAB	11.34	
		SNAGGRS4	34.925		1.29	44.93	1.40	1.78	1	BOT. CORNER WALL	10.85	1.29	1	BOTTOM SLAB	11.64	
		SNS5A	35.550		1.26	44.97	1.40	1.75	1	BOT. CORNER WALL	10.85	1.26	1	BOTTOM SLAB	11.64	
		SNS6A	39.950		1.26	50.37	1.40	1.78	1	BOT. CORNER WALL	10.85	1.26	1	BOTTOM SLAB	11.64	
		SNS7B	42.000		1.18	49.64	1.40	1.71	1	BOTTOM SLAB	12.35	1.18	1	BOTTOM SLAB	11.64	
	TRUCK TRACTOR SEMI-TRAILER (TTST)	TNAGRIT3	33.000		1.37	45.06	1.40	1.95	1	BOTT. CORNER WALL	10.85	1.37	1	BOTTOM SLAB	11.64	
		TNT4A	33.075		1.36	44.84	1.40	1.93	1	BOTTOM SLAB	12.35	1.36	1	BOTTOM SLAB	11.64	
		TNT6A	41.600		1.24	51.59	1.40	1.85	1	BOTTOM SLAB	12.35	1.24	1	BOTTOM SLAB	11.64	
		TNT7A	42.000		1.19	49.80	1.40	1.74	1	BOTTOM SLAB	12.35	1.19	1	BOTTOM SLAB	11.64	
		TNT7B	42.000		1.29	54.22	1.40	1.82	1	BOTTOM SLAB	12.35	1.29	1	BOTTOM SLAB	11.64	
		TNAGRIT4	43.000	3	1.05	45.05	1.40	1.51	1	BOTTOM SLAB	12.35	1.05	1	BOTTOM SLAB	11.64	
		TNAGT5A	45.000		1.16	52.37	1.40	1.68	1	BOTTOM SLAB	12.35	1.16	1	BOTTOM SLAB	11.64	
		TNAGT5B	45.000		1.07	48.08	1.40	1.55	1	BOTTOM SLAB	12.35	1.07	1	BOTTOM SLAB	11.64	

LOAD FACTORS:

DESIGN LOAD RATING FACTORS

LOAD TYPE	MAX FACTOR	MIN FACTOR
DC	1.25	0.90
DW	1.50	0.65
EV	1.30	0.90
EH	1.35	0.50 OR 0.90
ES	1.35	0.50 OR 0.90
LS	1.75	--
WA	1.00	--

NOTE:

RATING FACTORS ARE BASED ON THE STRENGTH I LIMIT STATE.

COMMENTS:

1.
2.
3.
4.

(#) CONTROLLING LOAD RATING

(1) DESIGN LOAD RATING (HL-93)

(2) DESIGN LOAD RATING (HS-20)

(3) LEGAL LOAD RATING **

** SEE CHART FOR VEHICLE TYPE

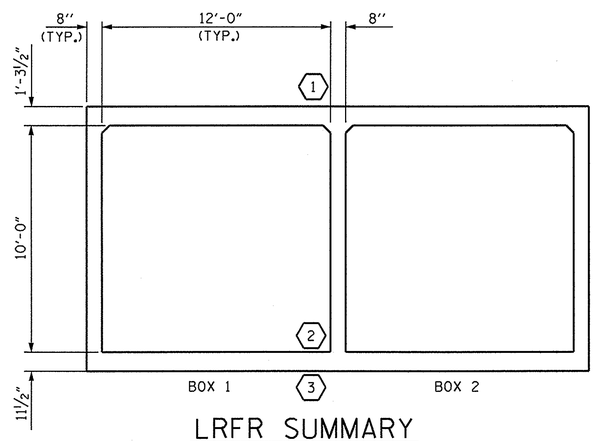

LRFR SUMMARY

PROJECT NO. B-4241

POLK COUNTY

STATION: 13+98.00 -L-

SHEET 7 OF 7

STATE OF NORTH CAROLINA
DEPARTMENT OF TRANSPORTATION
RALEIGH

STANDARD

LRFR SUMMARY FOR REINFORCED CONCRETE BOX CULVERTS
(NON-INTERSTATE TRAFFIC)

NORTH CAROLINA PROFESSIONAL SEAL 20125 ENGINEER MARSHALL G. CHEEK, JR.
6-3-13

REVISIONS						SHEET NO.
NO.	BY:	DATE:	NO.	BY:	DATE:	C-7
1			3			TOTAL SHEETS
2			4			7

ASSEMBLED BY : V.X. NGUYEN DATE : 5-14-13
CHECKED BY : M.G. CHEEK DATE : 5-22-13
DRAWN BY : WMC 7/11
CHECKED BY : GM 7/11
REV. 10/1/11 MAA/GM

03-JUN-2013 11:45
R:\Structures\Plans\b4241\vnguyen\B-4241_SD_CU.dgn
vnguyen

B - 4241

TIP PROJECT:

STATE OF NORTH CAROLINA
DIVISION OF HIGHWAYS

STATE PROJECT REFERENCE NO.	SHEET NO.
B - 4 2 4 1	TMP-1

PLAN FOR PROPOSED TRAFFIC CONTROL, MARKING & DELINEATION

POLK COUNTY

ROADWAY STANDARD DRAWINGS

THE FOLLOWING ROADWAY STANDARDS AS APPEAR IN "ROADWAY STANDARD DRAWINGS"-ROADWAY DESIGN UNIT-N.C. DEPARTMENT OF TRANSPORTATION-RALEIGH, N.C., DATED JANUARY 2012 ARE APPLICABLE TO THIS PROJECT AND BY REFERENCE HEREBY ARE CONSIDERED A PART OF THESE PLANS:

STD. NO.	TITLE
1101.03	TEMPORARY ROAD CLOSURES
1101.05	WORK ZONE VEHICLE ACCESSES
1101.11	TRAFFIC CONTROL DESIGN TABLES
1110.01	STATIONARY WORK ZONE SIGNS
1130.01	DRUM
1145.01	BARRICADES
1205.01	PAVEMENT MARKINGS - LINE TYPES & OFFSETS
1205.02	PAVEMENT MARKINGS - 2 LANE & MULTILANE ROADWAYS
1261.01	GUARDRAIL & BARRIER DELINEATOR SPACING
1261.02	GUARDRAIL & BARRIER DELINEATOR TYPES
1262.01	GUARDRAIL END DELINEATION

INDEX OF SHEETS

SHEET NO.	TITLE
TMP-1	LIST OF APPLICABLE ROADWAY STANDARD DRAWINGS, GENERAL NOTES, LEGEND, PAVEMENT MARKING SCHEDULE AND INDEX OF SHEETS
TMP-2	DETOUR ROUTE AND PHASING

PAVEMENT MARKING SCHEDULE

THERMOPLASTIC (4", 120 MILS) STANDARD GLASS BEADS

SYMBOL	DESCRIPTION
T1	YELLOW DOUBLE CENTERLINE

THERMOPLASTIC (4", 90 MILS) STANDARD GLASS BEADS

SYMBOL	DESCRIPTION
TA	WHITE EDGELINE

GENERAL NOTES

CHANGES MAY BE REQUIRED WHEN PHYSICAL DIMENSIONS IN THE DETAIL DRAWINGS, STANDARD DETAILS AND ROADWAY DETAILS ARE NOT ATTAINABLE TO MEET FIELD CONDITIONS, OR RESULT IN DUPLICATE, OR UNDESIRED OVERLAPPING OF DEVICES. MODIFICATION MAY INCLUDE: MOVING, SUPPLEMENTING, COVERING OR REMOVAL OF DEVICES, AS DIRECTED BY THE ENGINEER.

THE FOLLOWING GENERAL NOTES APPLY AT ALL TIMES FOR THE DURATION OF THE CONSTRUCTION PROJECT EXCEPT WHEN OTHERWISE NOTED IN THE PLAN OR DIRECTED BY THE ENGINEER.

TRAFFIC PATTERN ALTERATIONS

A) NOTIFY THE ENGINEER TWENTY ONE (21) CALENDAR DAYS PRIOR TO ANY TRAFFIC PATTERN ALTERATION.

SIGNING

B) PROVIDE SIGNING AND DEVICES REQUIRED TO CLOSE THE ROAD ACCORDING TO THE ROADWAY STANDARD DRAWINGS AND TRAFFIC CONTROL PLANS.

PROVIDE SIGNING REQUIRED FOR THE OFF-SITE DETOUR ROUTE AS SHOWN IN THE TRAFFIC CONTROL PLANS.

C) COVER OR REMOVE ALL SIGNS AND DEVICES REQUIRED TO CLOSE THE ROAD WHEN ROAD CLOSURE IS NOT IN OPERATION.

COVER OR REMOVE ALL SIGNS REQUIRED FOR THE OFF-SITE DETOUR WHEN THE DETOUR IS NOT IN OPERATION.

D) ENSURE ALL NECESSARY SIGNING IS IN PLACE PRIOR TO ALTERING ANY TRAFFIC PATTERN.

TRAFFIC CONTROL DEVICES

E) PLACE TYPE III BARRICADES WITH "ROAD CLOSED" SIGN R11-2 ATTACHED OF SUFFICIENT LENGTH TO CLOSE ENTIRE ROADWAY.

PAVEMENT MARKINGS AND MARKERS

F) INSTALL FINAL PAVEMENT MARKINGS AND FINAL PAVEMENT MARKERS ON THE FINAL SURFACE AS FOLLOWS:

ROAD NAME	MARKING	MARKER
1. SR 1520 (LANDRUM RD.)	THERMOPLASTIC	NONE

G) TIE PROPOSED PAVEMENT MARKING LINES TO EXISTING PAVEMENT MARKING LINES.

LEGEND

GENERAL

- DIRECTION OF TRAFFIC FLOW
- NORTH ARROW
- PROPOSED PVMT. --------- EXIST. PVMT.
- WORK AREA
- REMOVAL OF EXISTING PAVEMENT

TRAFFIC CONTROL DEVICES

- TYPE III BARRICADE
- CONE
- DRUM
- FLASHING ARROW PANEL (TYPE C)
- TYPE 'B' WARNING LIGHT
- STATIONARY SIGN
- PORTABLE SIGN
- STATIONARY OR PORTABLE SIGN
- CRASH CUSHION
- CHANGEABLE MESSAGE SIGN
- TRUCK MOUNTED IMPACT ATTENUATOR (TMIA)
- POLICE
- FLAGGER

PAVEMENT MARKINGS

- CRYSTAL/CRYSTAL PAVEMENT MARKER
- YELLOW/YELLOW PAVEMENT MARKER
- CRYSTAL/RED PAVEMENT MARKER
- PAVEMENT MARKING SYMBOLS

APPROVED: _____
DATE: _____

SEAL

NORTH CAROLINA PROFESSIONAL SEAL 18973 ENGINEER G. L. GETTIER 6 MAR 13

PLAN PREPARED BY: N.C.D.O.T. TRAFFIC CONTROL, MARKING & DELINEATION UNIT

J. S. BOURNE, P.E. — TRAFFIC CONTROL ENGINEER
G. L. GETTIER, P.E. — TRAFFIC CONTROL PROJECT ENGINEER
J. W. GILSTRAP — TRAFFIC CONTROL PROJECT DESIGN ENGINEER
KEN BROADWELL — TRAFFIC CONTROL DESIGN ENGINEER

06-MAR-2013 13:39
\\dot\dfsroot0\Proj\TIPProjects-B\B4241\Traffic\TrafficControl\tcp\TC_Detour.dgn
kbroadwell AT TE266004

PROJ. REFERENCE NO.	SHEET NO.
B-4241	TMP-2

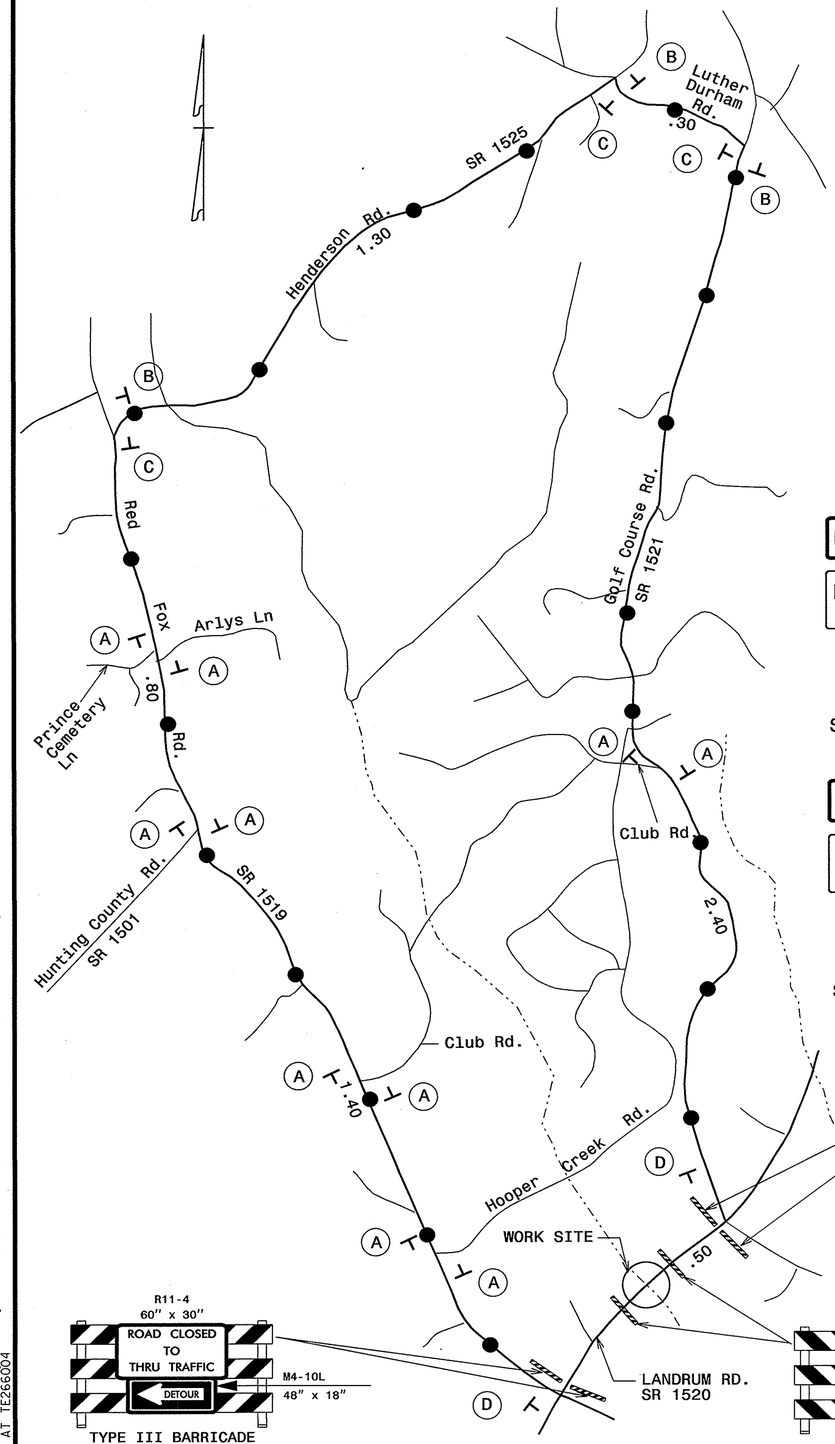

*The special sign design shown on this sheet was provided through a sealed document from Signing and Delineation. The document was submitted to WZTC on March 6, 2013 and sealed by a Professional Engineer, Ronald W. King, license # 022959.

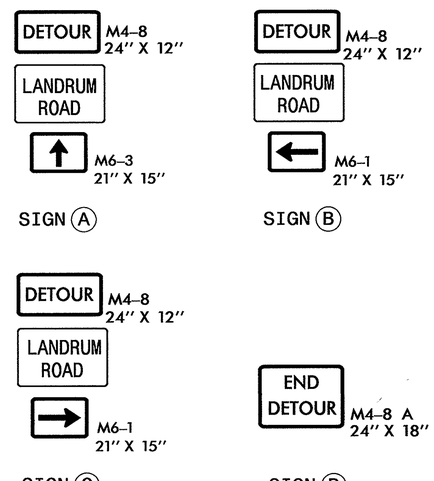

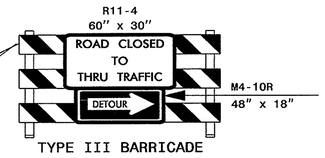

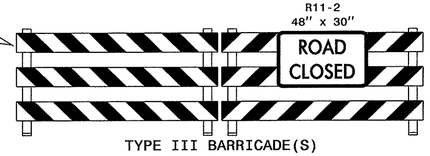

SIGN NUMBER: SP13070
TYPE: STATIONARY
QUANTITY: SEE PLANS
SIGN WIDTH: 3'-6"
HEIGHT: 2'-0"
TOTAL AREA: 7.0 Sq.Ft.
BORDER TYPE: INSET
RECESS: 0.38"
WIDTH: 0.63"
RADII: 1.5"
NO. Z BARS:
LENGTH:

BACKG COLOR: Fluorescent Orange
COPY COLOR: Black

SYMBOL	X	Y	WID	HT

MAT'L: 0.080" (2.0 mm) ALUMINUM

USE NOTES: 1,2

1. Legend and border shall be direct applied black non-reflective sheeting.
2. Background shall be NC GRADE B fluorescent orange retroreflective sheeting.

DESIGN BY: W. Johnson
PROJECT ID: B-4241
CHECKED BY:
DIV: 14
DATE: Mar 05, 2013

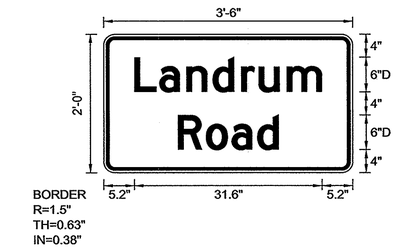

Spacing Factor is 1 unless specified otherwise

LETTER POSITIONS

Letter spacings are to start of next letter

											Series/Size Text Length
	L	a	n	d	r	u	m				D 2000
5.2	4.2	4.6	4.4	4.8	2.9	4.7	5.9	5.2			31.6
	R	o	a	d							D 2000
12.5	4.7	4.3	4.3	3.6	12.5						17

FILENAME: SP13069_Landrun Rd

NORTH CAROLINA D.O.T. SIGN DETAIL

PHASING

STEP 1: - USING ROADWAY STANDARD DRAWING NO. 1101.03, SHEET 1 OF 9, CLOSE SR 1520 (LANDRUM ROAD -L-) TO THRU TRAFFIC.

NOTE: INSTALL ADDITIONAL TYPE III BARRICADES AT STA. 15+75 +/- -L- TO MAINTAIN ACCESS TO DRIVEWAY. USE DRUMS TO DELINEATE TRAVELWAY DURING CONSTRUCTION.

- INSTALL DETOUR ROUTE SIGN ASSEMBLIES.

STEP 2: - REMOVE THE EXISTING STRUCTURE AND CONSTRUCT THE PROPOSED STRUCTURE AND ROADWAY UP TO AND INCLUDING THE FINAL LAYER OF SURFACE COURSE (SEE THE CONSTRUCTION PLANS).

- PLACE THE FINAL PAVEMENT MARKINGS ON SR 1520 (LANDRUM ROAD -L-).

STEP 3: - REMOVE ALL TRAFFIC CONTROL DEVICES AND DETOUR ROUTE SIGNING. REOPEN SR 1520 (LANDRUM ROAD -L-) TO THE FINAL TRAFFIC PATTERN.

NOTES

- ALL DETOUR SIGNS ARE BLACK ON ORANGE.
- ALL DETOUR SIGN LOCATIONS ARE APPROXIMATE.
- SEE ROADWAY STANDARD DRAWING NO. 1101.03 SHEET 1 OF 9 FOR ADDITIONAL WORK ZONE SIGNS.

APPROVED:_____ DATE:_____

SEAL

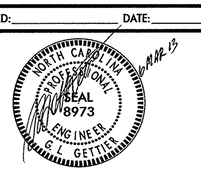

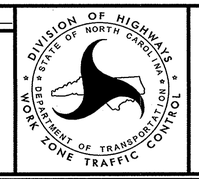

DETOUR ROUTE AND PHASING

06-MAR-2013 13:39
\\dot\dfsroot01\Proj\TIPProjects-B\B4241\Traffic\TrafficControl\tcp\TC_Detour.dgn
kbroadwell AT TE266004

TIP PROJECT: B-4241

STATE	STATE PROJECT REFERENCE NO.	SHEET NO.	TOTAL SHEETS
N.C.	B-4241	EC-1	

STATE PROJ. NO.	F.A. PROJ. NO.	DESCRIPTION

STATE OF NORTH CAROLINA
DIVISION OF HIGHWAYS

PLAN FOR PROPOSED
HIGHWAY EROSION CONTROL

POLK COUNTY

LOCATION: REPLACE BRIDGE 24 OVER HOOPER CREEK ON SR 1520 (LANDRUM ROAD).

TYPE OF WORK: GRADING, DRAINAGE, PAVING, AND STRUCTURE

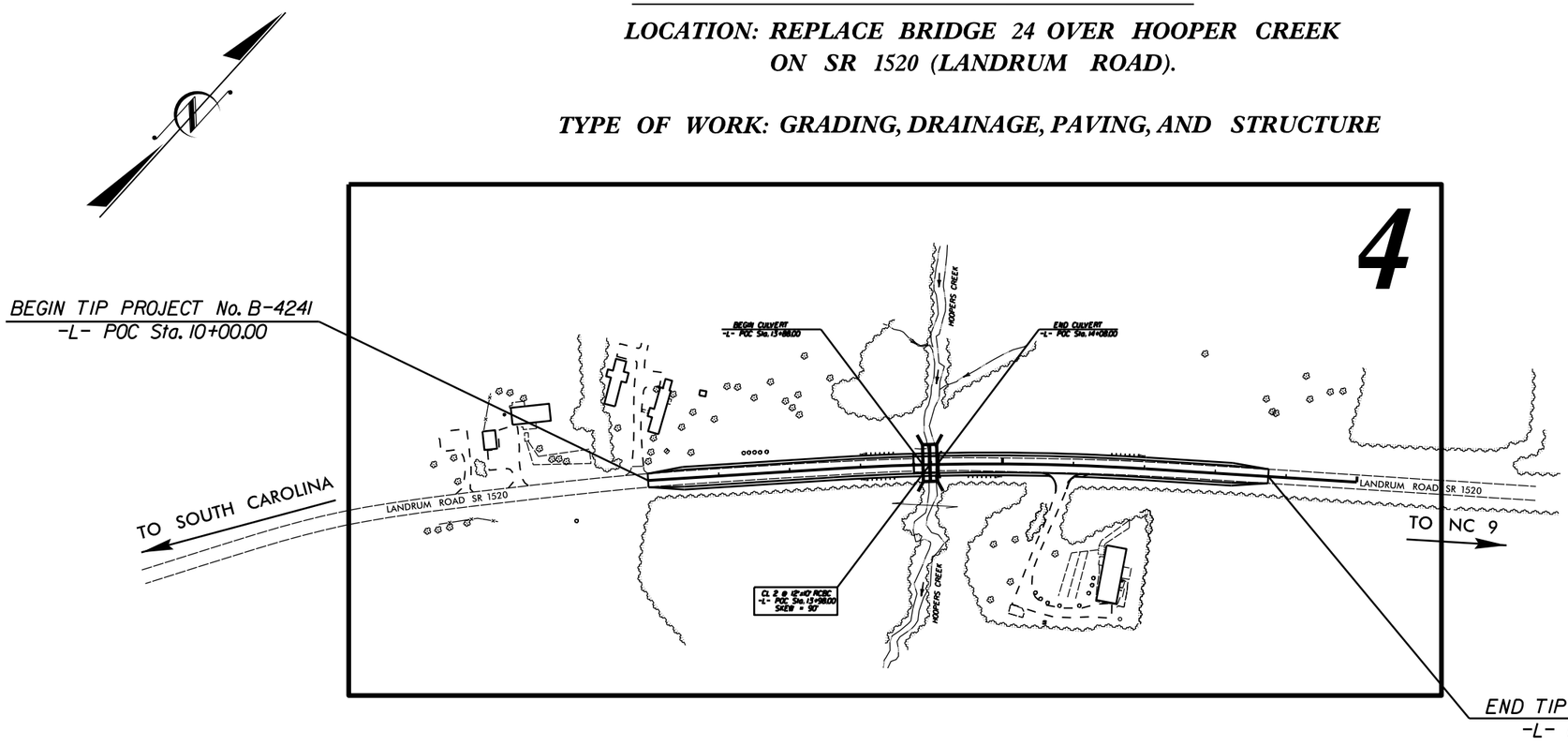

EROSION AND SEDIMENT CONTROL MEASURES

Std. No.	Description	Symbol
1630.03	Temporary Silt Ditch	TSD
1630.05	Temporary Diversion	TD
1605.01	Temporary Silt Fence	
1606.01	Special Sediment Control Fence	
1622.01	Temporary Berms and Slope Drains	
1630.02	Silt Basin Type B	
1633.01	Temporary Rock Silt Check Type-A	
	Temporary Rock Silt Check Type-A with Matting and Polyacrylamide (PAM)	
1633.02	Temporary Rock Silt Check Type-B	
	Wattle / Coir Fiber Wattle	EW CFW
	Wattle / Coir Fiber Wattle with Polyacrylamide (PAM)	
1634.01	Temporary Rock Sediment Dam Type-A	
1634.02	Temporary Rock Sediment Dam Type-B	
1635.01	Rock Pipe Inlet Sediment Trap Type-A	
1635.02	Rock Pipe Inlet Sediment Trap Type-B	
1630.04	Stilling Basin	
1630.06	Special Stilling Basin	
	Rock Inlet Sediment Trap:	
1632.01	Type A	A
1632.02	Type B	B
1632.03	Type C	C
	Skimmer Basin	
	Tiered Skimmer Basin	
	Infiltration Basin	

THIS PROJECT CONTAINS EROSION CONTROL PLANS FOR CLEARING AND GRUBBING PHASE OF CONSTRUCTION.

NOTES: ANY DEVIATION FROM OPTIONS GIVEN WILL REQUIRE PRIOR APPROVAL BY ENGINEER.

ADDITIONAL EROSION CONTROL DEVICES MAY NEED TO BE INSTALLED AS DIRECTED BY THE ENGINEER.

GRAPHIC SCALE

0 PLANS

0 PROFILE (HORIZONTAL)

0 PROFILE (VERTICAL)

ROADSIDE ENVIRONMENTAL UNIT
DIVISION OF HIGHWAYS
STATE OF NORTH CAROLINA

THESE EROSION AND SEDIMENT CONTROL PLANS COMPLY WITH THE REGULATIONS SET FORTH BY THE NCG-010000 GENERAL CONSTRUCTION PERMIT EFFECTIVE AUGUST 3, 2011 ISSUED BY THE NORTH CAROLINA DEPARTMENT OF ENVIRONMENT AND NATURAL RESOURCES DIVISION OF WATER QUALITY.

Prepared In the Office of:

ROADSIDE ENVIRONMENTAL UNIT

1 South Wilmington St.
Raleigh, NC 27611

2012 STANDARD SPECIFICATIONS

Roadway Standard Drawings

The following roadway english standards as appear in "Roadway Standard Drawings"– Roadway Design Unit – N. C. Department of Transportation – Raleigh, N. C., dated January 2012 and the latest revison thereto are applicable to this project and by reference hereby are considered a part of these plans.

1604.01	Railroad Erosion Control Detail	1632.01	Rock Inlet Sediment Trap Type A
1605.01	Temporary Silt Fence	1632.02	Rock Inlet Sediment Trap Type B
1606.01	Special Sediment Control Fence	1632.03	Rock Inlet Sediment Trap Type C
1607.01	Gravel Construction Entrance	1633.01	Temporary Rock Silt Check Type A
1622.01	Temporary Berms and Slope Drains	1633.02	Temporary Rock Silt Check Type B
1630.01	Riser Basin	1634.01	Temporary Rock Sediment Dam Type A
1630.02	Silt Basin Type B	1634.02	Temporary Rock Sediment Dam Type B
1630.03	Temporary Silt Ditch	1635.01	Rock Pipe Inlet Sediment Trap Type A
1630.04	Stilling Basin	1635.02	Rock Pipe Inlet Sediment Trap Type B
1630.05	Temporary Diversion	1640.01	Coir Fiber Baffle
1630.06	Special Stilling Basin	1645.01	Temporary Stream Crossing
1631.01	Matting Installation		

14-JUN-2013 08:26
engb0ahw
ring ATPRENV0956428

PROJECT REFERENCE NO.	SHEET NO.
B-4241	EC-2
R/W SHEET NO.	
ROADWAY DESIGN ENGINEER	HYDRAULICS ENGINEER

WATTLE WITH POLYACRYLAMIDE (PAM) DETAIL

ROADSIDE ENVIRONMENTAL UNIT
DEPARTMENT OF TRANSPORTATION
DIVISION OF HIGHWAYS
RALEIGH, N.C.
2012 STANDARD SPECIFICATIONS

NOTES: ANY DEVIATION FROM OPTIONS GIVEN WILL REQUIRE PRIOR APPROVAL BY ENGINEER.

ADDITIONAL EROSION CONTROL DEVICES MAY NEED TO BE INSTALLED AS DIRECTED BY THE ENGINEER.

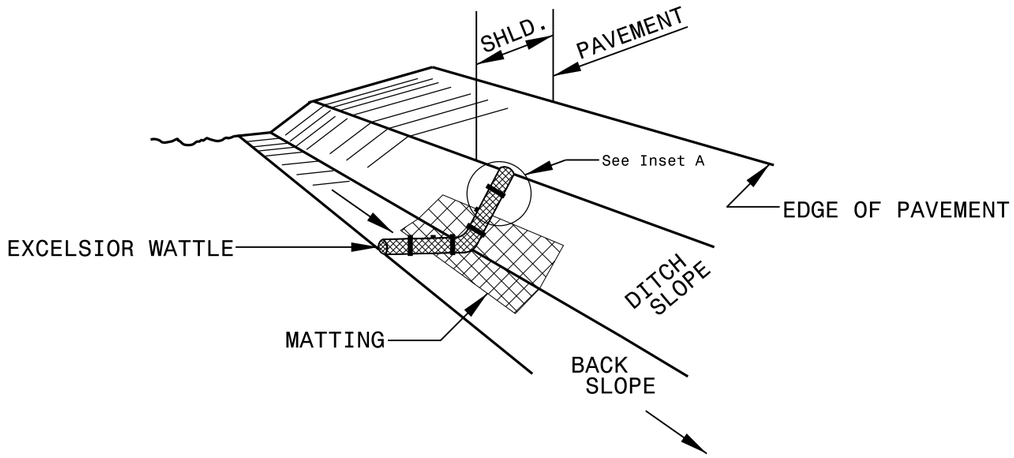

ISOMETRIC VIEW

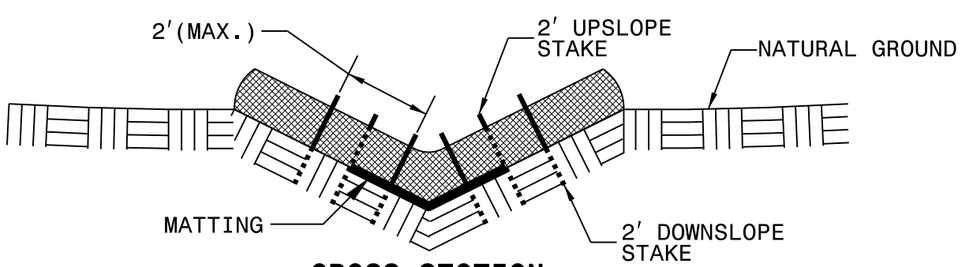

CROSS SECTION
VEE DITCH

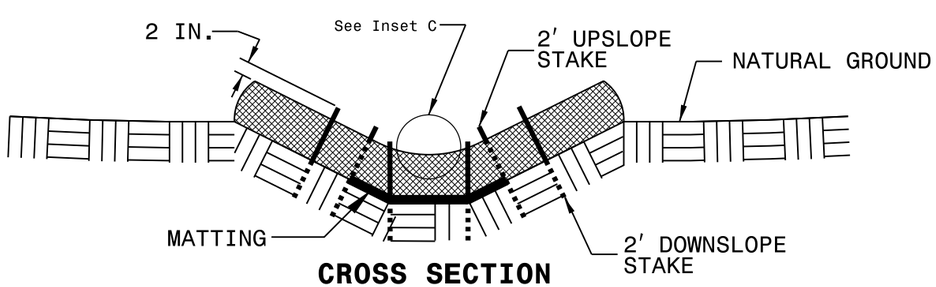

CROSS SECTION
TRAPEZOIDAL DITCH

NOTES:

USE MINIMUM 12 IN. DIAMETER EXCELSIOR WATTLE.

USE 2 FT. WOODEN STAKES WITH A 2 IN. BY 2 IN. NOMINAL CROSS SECTION.

ONLY INSTALL WATTLE(S) TO A HEIGHT IN DITCH SO FLOW WILL NOT WASH AROUND WATTLE AND SCOUR DITCH SLOPES AND AS DIRECTED.

INSTALL A MINIMUM OF 2 UPSLOPE STAKES AND 4 DOWNSLOPE STAKES AT AN ANGLE TO WEDGE WATTLE TO BOTTOM OF DITCH.

PROVIDE STAPLES MADE OF 0.125 IN. DIAMETER STEEL WIRE FORMED INTO A U SHAPE NOT LESS THAN 12″ IN LENGTH.

INSTALL STAPLES APPROXIMATELY EVERY 1 LINEAR FOOT ON BOTH SIDES OF WATTLE AND AT EACH END TO SECURE IT TO THE SOIL.

INSTALL MATTING IN ACCORDANCE WITH SECTION 1631 OF THE STANDARD SPECIFICATIONS.

PRIOR TO POLYACRYLAMIDE (PAM) APPLICATION, OBTAIN A SOIL SAMPLE FROM PROJECT LOCATION, AND FROM OFFSITE MATERIAL, AND ANALYZE FOR APPROPRIATE PAM FLOCCULANT TO BE APPLIED TO EACH WATTLE.

INITIALLY APPLY 2 OUNCES OF ANIONIC OR NEUTRALLY CHARGED PAM OVER WATTLE WHERE WATER WILL FLOW AND 1 OUNCE OF PAM ON MATTING ON EACH SIDE OF WATTLE. REAPPLY PAM AFTER EVERY RAINFALL EVENT THAT IS EQUAL TO OR EXCEEDS 0.50 IN.

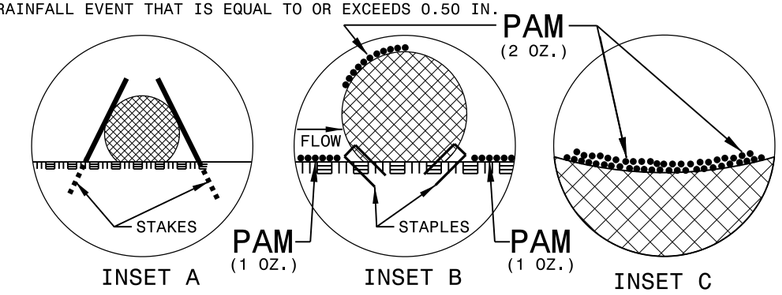

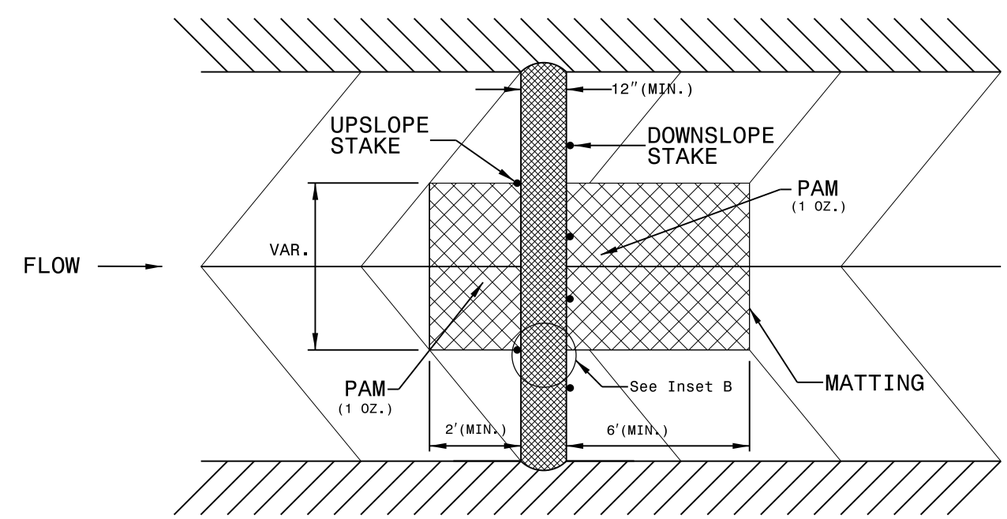

TOP VIEW

PROJECT REFERENCE NO.	SHEET NO.
B-4241	EC-2A
R/W SHEET NO.	
ROADWAY DESIGN ENGINEER	HYDRAULICS ENGINEER

TEMPORARY ROCK SILT CHECK TYPE 'A' WITH EXCELSIOR MATTING AND POLYACRYLAMIDE (PAM)

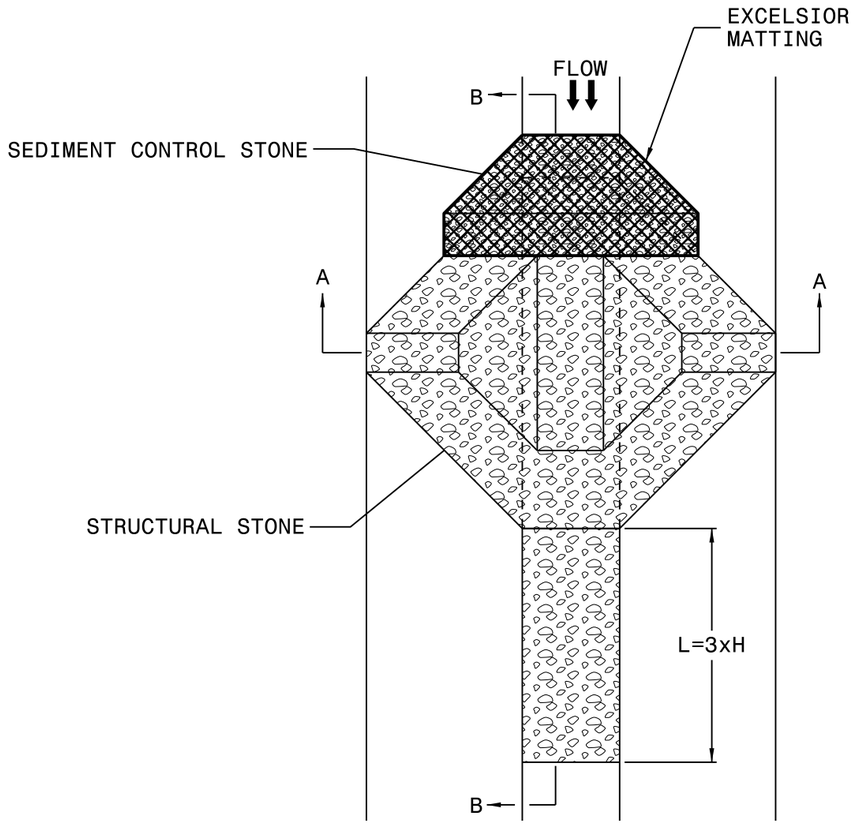

PLAN

NOTES

USE EXCELSIOR FOR MATTING MATERIAL AND ANCHOR MATTING SECTION AT TOP AND BOTTOM WITH CLASS B STONE.

PRIOR TO POLYACRYLAMIDE (PAM) APPLICATION, OBTAIN A SOIL SAMPLE FROM PROJECT LOCATION, AND FROM OFFSITE MATERIAL, AND ANALYZE FOR APPROPRIATE PAM FLOCCULANT TO BE APPLIED TO EACH ROCK SILT CHECK.

INITIALLY APPLY 3.5 OUNCES OF POLYACRYLAMIDE (PAM) TO TOP OF MATTING SECTION AND AFTER EVERY RAINFALL EVENT THAT EQUALS OR EXCEEDS 0.50 INCHES.

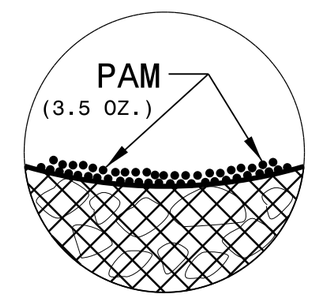

INSET A

ROADSIDE ENVIRONMENTAL UNIT
DEPARTMENT OF TRANSPORTATION
DIVISION OF HIGHWAYS
RALEIGH, N.C.

2012 STANDARD SPECIFICATIONS

NOTES: ANY DEVIATION FROM OPTIONS GIVEN WILL REQUIRE PRIOR APPROVAL BY ENGINEER.

ADDITIONAL EROSION CONTROL DEVICES MAY NEED TO BE INSTALLED AS DIRECTED BY THE ENGINEER.

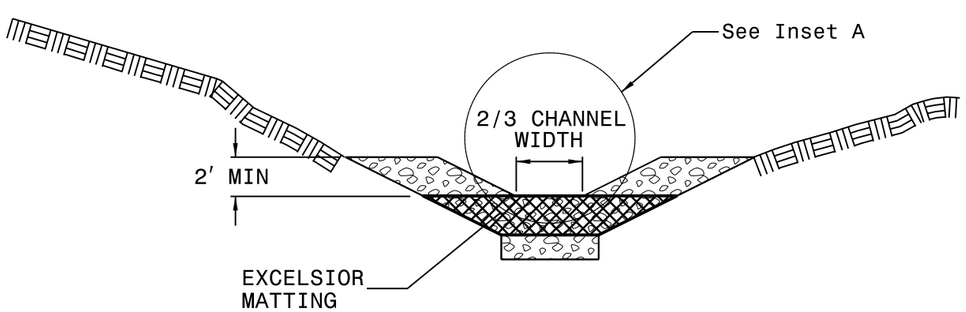

SECTION A-A

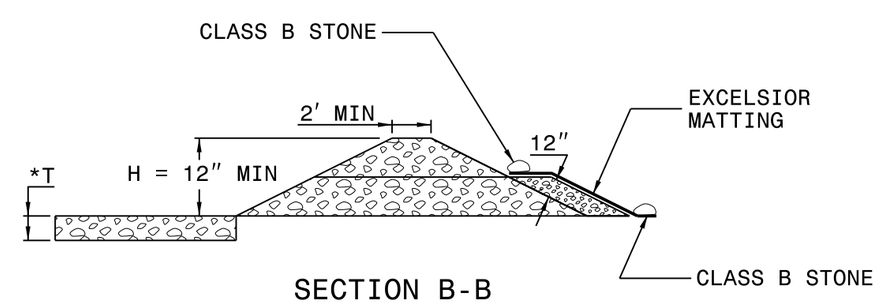

SECTION B-B

*T = 12" MIN., 18" MAX.

NOT TO SCALE

PROJECT REFERENCE NO.	SHEET NO.
B-4241	EC-3
ROADWAY DESIGN ENGINEER	HYDRAULICS ENGINEER

DIVISION OF HIGHWAYS
STATE OF NORTH CAROLINA

SOIL STABILIZATION TIMEFRAMES

SITE DESCRIPTION	STABILIZATION TIME	TIMEFRAME EXCEPTIONS
PERIMETER DIKES, SWALES, DITCHES AND SLOPES	7 DAYS	NONE
HIGH QUALITY WATER (HQW) ZONES	7 DAYS	NONE
SLOPES STEEPER THAN 3:1	7 DAYS	IF SLOPES ARE 10' OR LESS IN LENGTH AND ARE NOT STEEPER THAN 2:1, 14 DAYS ARE ALLOWED.
SLOPES 3:1 OR FLATTER	14 DAYS	7 DAYS FOR SLOPES GREATER THAN 50' IN LENGTH.
ALL OTHER AREAS WITH SLOPES FLATTER THAN 4:1	14 DAYS	NONE, EXCEPT FOR PERIMETERS AND HQW ZONES.

ROADSIDE ENVIRONMENTAL UNIT
DEPARTMENT OF TRANSPORTATION
DIVISION OF HIGHWAYS
RALEIGH, N.C.

2012 STANDARD SPECIFICATIONS

NOTES: ANY DEVIATION FROM OPTIONS GIVEN WILL REQUIRE PRIOR APPROVAL BY ENGINEER.

ADDITIONAL EROSION CONTROL DEVICES MAY NEED TO BE INSTALLED AS DIRECTED BY THE ENGINEER.

8/17/99

NOTE:
PLACE TEMPORARY ROCK SEDIMENT DAMS TYPE – B AND TEMPORARY ROCK SILT CHECKS TYPE – A AT DRAINAGE OUTLETS.

PROJECT REFERENCE NO.	SHEET NO.
B-4241	EC-4/CONST.4
R/W SHEET NO.	
ROADWAY DESIGN ENGINEER	HYDRAULICS ENGINEER

CLEARING AND GRUBBING
EROSION CONTROL FOR
CONSTRUCTION SHEET 4

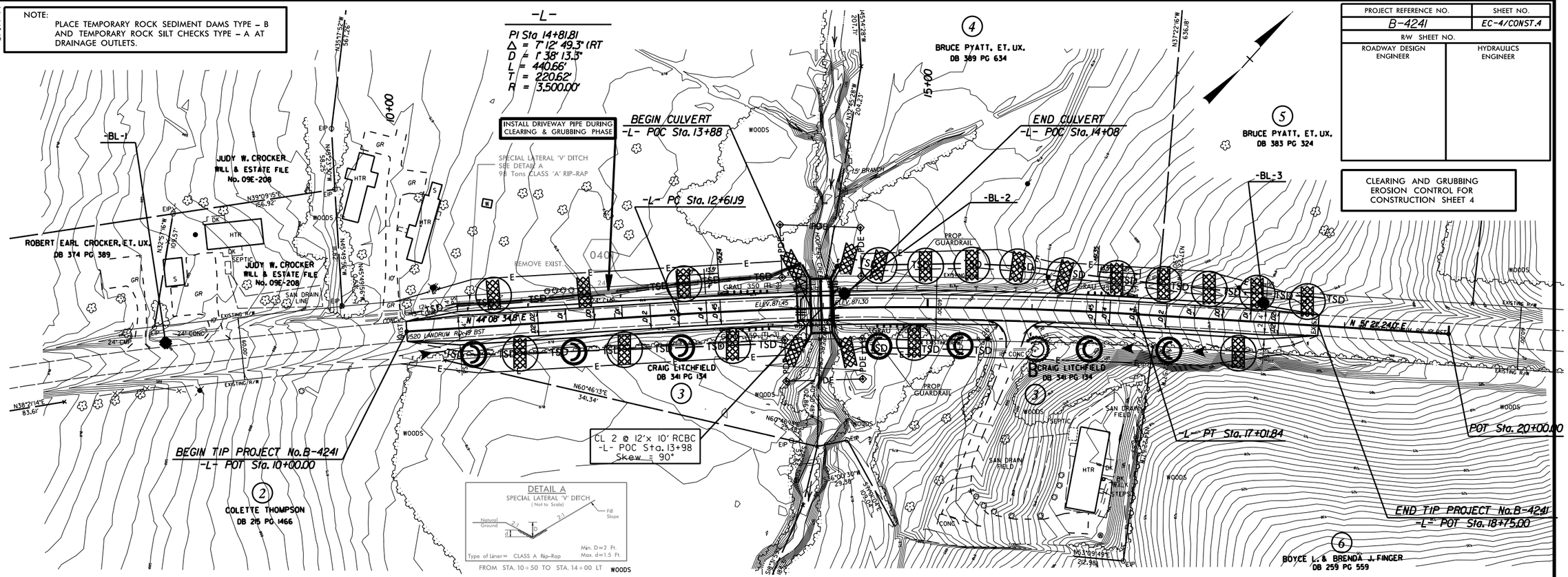

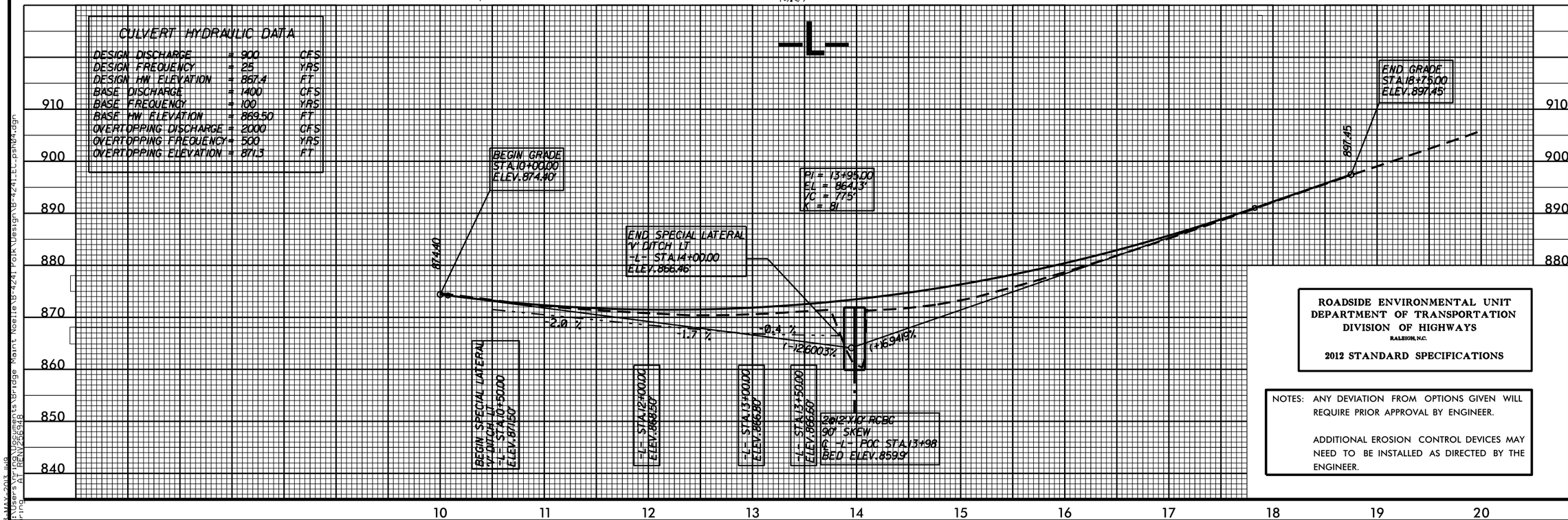

ROADSIDE ENVIRONMENTAL UNIT
DEPARTMENT OF TRANSPORTATION
DIVISION OF HIGHWAYS
RALEIGH, N.C.

2012 STANDARD SPECIFICATIONS

NOTES: ANY DEVIATION FROM OPTIONS GIVEN WILL REQUIRE PRIOR APPROVAL BY ENGINEER.

ADDITIONAL EROSION CONTROL DEVICES MAY NEED TO BE INSTALLED AS DIRECTED BY THE ENGINEER.

13-MAY-2013 11:19
R:\Users\Project\Documents\Bridge Maint Noelle\B-4241 Polk\Design\B-4241_EC_psh04.dgn
Printed at REN\2549.8

CULVERT CONSTRUCTION SEQUENCE STA. 13 + 98 –L–

PROJECT REFERENCE NO.	SHEET NO.
B-4241	EC-5/CONST.4
R/W SHEET NO.	
ROADWAY DESIGN ENGINEER	HYDRAULICS ENGINEER

PHASE I

1. UTILIZE SPECIAL STILLING BASIN(S) AS NEEDED DURING CULVERT CONSTRUCTION.
2. CONSTRUCT IMPERVIOUS DIKE A.
3. CONSTRUCT CULVERT BARREL 1.
4. REMOVE IMPERVIOUS DIKE A.

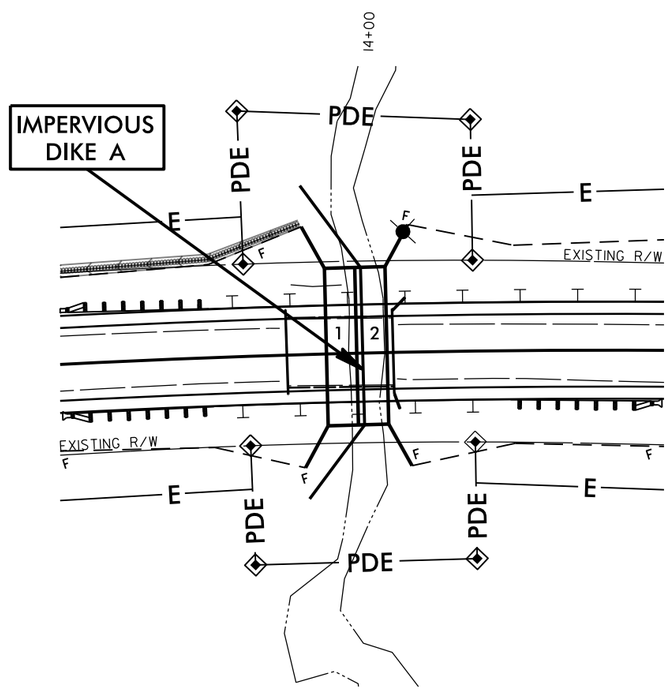

ROADSIDE ENVIRONMENTAL UNIT
DEPARTMENT OF TRANSPORTATION
DIVISION OF HIGHWAYS
RALEIGH, N.C.

2012 STANDARD SPECIFICATIONS

PHASE II

5. CONSTRUCT IMPERVIOUS DIKES B.
6. CONSTRUCT CULVERT BARREL 2.
7. REMOVE IMPERVIOUS DIKES B.
8. REMOVE ANY REMAINING SPECIAL STILLING BASIN(S), AND COMPLETE ROADWAY.

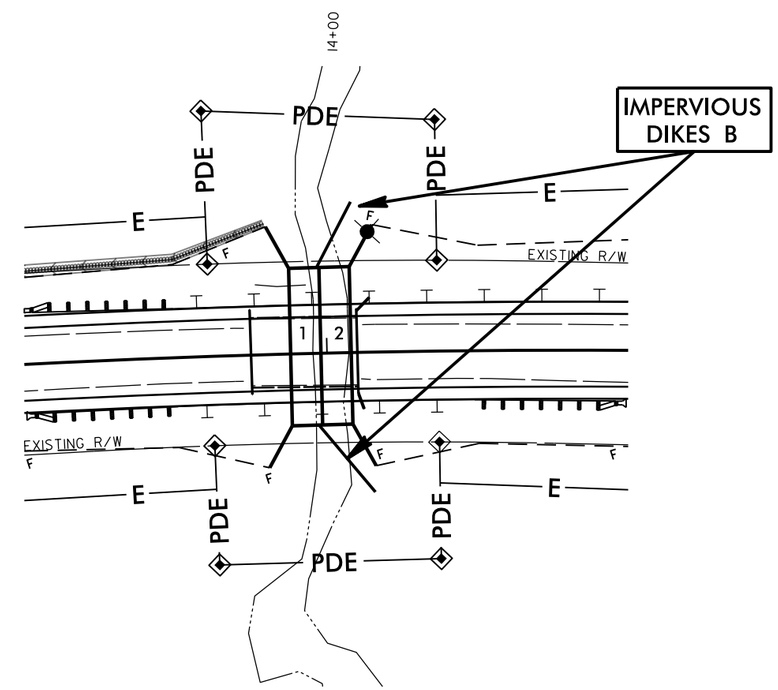

NOTES: ANY DEVIATION FROM OPTIONS GIVEN WILL REQUIRE PRIOR APPROVAL BY ENGINEER.

ADDITIONAL EROSION CONTROL DEVICES MAY NEED TO BE INSTALLED AS DIRECTED BY THE ENGINEER.

PROJECT REFERENCE NO.	SHEET NO.
B-4241	EC-6/CONST.4
R/W SHEET NO.	
ROADWAY DESIGN ENGINEER	HYDRAULICS ENGINEER

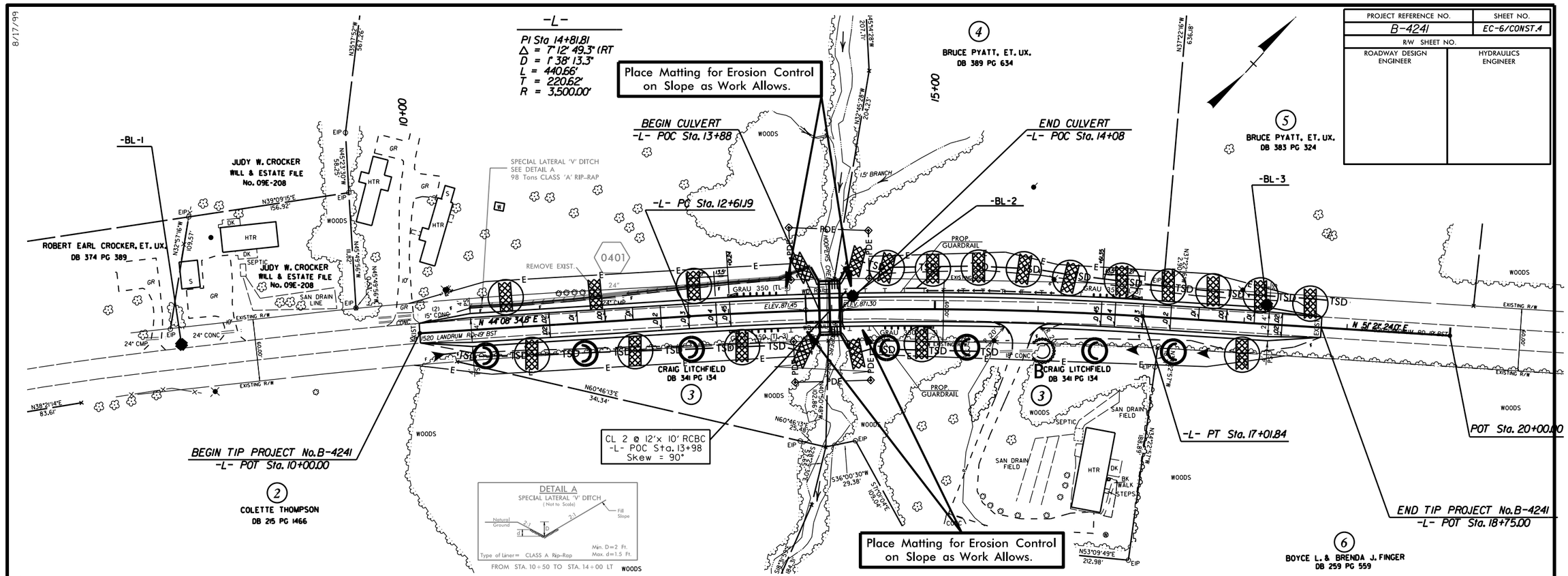

ROADSIDE ENVIRONMENTAL UNIT
DEPARTMENT OF TRANSPORTATION
DIVISION OF HIGHWAYS
RALEIGH, N.C.

2012 STANDARD SPECIFICATIONS

NOTES: ANY DEVIATION FROM OPTIONS GIVEN WILL REQUIRE PRIOR APPROVAL BY ENGINEER.

ADDITIONAL EROSION CONTROL DEVICES MAY NEED TO BE INSTALLED AS DIRECTED BY THE ENGINEER.

8/17/99

13-MAY-2013 11:20
I:\Users\Trpn\Documents\Bridge Maint Noelle\B-4241 Polk\Design\B-4241_LL_psh04.dgn
Trpn AT REV 25948