DocuSign Envelope ID: 82B09748-1DBC-4678-BD61-D38206DFB75E

09/08/99

TIP PROJECT: B-4605

See Sheet 1A For Index of Sheets
See Sheet 1B For Conventional Plan Sheet Symbols
See Sheets RW02C-1 & RW03E-1 For Right-of-Way Sheets

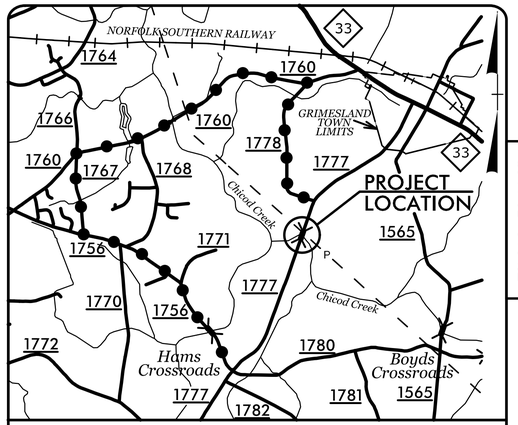

VICINITY MAP
OFFSITE DETOUR

FINAL PLANS

STATE OF NORTH CAROLINA
DIVISION OF HIGHWAYS

PITT COUNTY

STATE	STATE PROJECT REFERENCE NO.	SHEET NO.	TOTAL SHEETS
N.C.	B-4605	1	

STATE PROJ. NO.	F.A. PROJ. NO.	DESCRIPTION
38430.1.2 /17BP.2.R.91		PE (B-4605)
38430.2.3		R/W&UTIL (B-4605)
38430.3.1		CONST. (B-4605)

LOCATION: REPLACE BRIDGE 5 OVER CHICOD CREEK ON SR 1777

TYPE OF WORK: GRADING, DRAINAGE, PAVING, AND STRUCTURE

NAD 83/ NA 2011

4

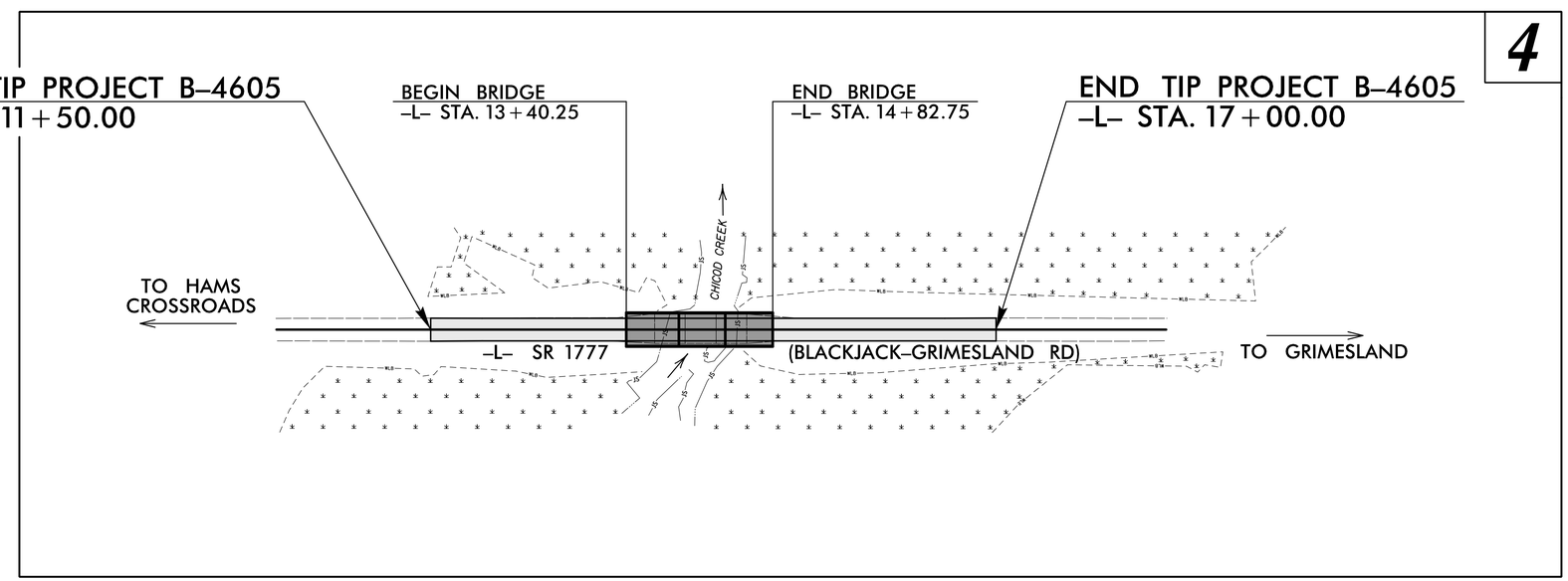

DOCUMENT NOT CONSIDERED FINAL UNLESS ALL SIGNATURES COMPLETED

CONTRACT: DB00499

11/24/2020
X:\NCDOT\B-4605\Roadway\Proj\b4605_rdy_tsh.dgn
User:bevans

GRAPHIC SCALES

50 25 0 50 100
PLANS

50 25 0 50 100
PROFILE (HORIZONTAL)

10 5 0 10 20
PROFILE (VERTICAL)

DESIGN DATA

ADT 2020 = 1380
ADT 2040 = 1700
K = 12 %
D = 55 %
T = 5 % *
V = 60 MPH
* (TTST 1% + DUAL 4%)
FUNC CLASS =
MINOR COLLECTOR
SUB-REGIONAL TIER

PROJECT LENGTH

LENGTH ROADWAY TIP PROJECT B-4605	=	*0.077 mile*
LENGTH STRUCTURES TIP PROJECT B-4605	=	*0.027 mile*
TOTAL LENGTH TIP PROJECT B-4605	=	*0.104 mile*

Prepared For:
DIVISION OF HIGHWAYS
1000 Birch Ridge Dr., Raleigh NC, 27610
By:

TGS ENGINEERS
706 HILLSBOROUGH ST
SUITE 200
RALEIGH, NC 27603

PH (919) 773-8887
CORP. LICENSE NO.:
C-0275

2018 STANDARD SPECIFICATIONS

RIGHT OF WAY DATE:
OCTOBER 26, 2018

LETTING DATE:
JANUARY 27, 2021

V. MARCUS LOWERY, PE
PROJECT ENGINEER

DAVID STUTTS, P.E.
NCDOT CONTACT

HYDRAULICS ENGINEER

DocuSigned by:
Benjamin J. Henegar
D7B8AA8840FF437...
SIGNATURE:
NORTH CAROLINA PROFESSIONAL SEAL 044158 ENGINEER BENJAMIN J. HENEGAR
P.E. 11/24/2020 | 7:35 AM PST

ROADWAY DESIGN ENGINEER

DocuSigned by:
Clifton T Register PE
8DAF86CB942E4F8...
SIGNATURE:
NORTH CAROLINA PROFESSIONAL SEAL 028392 ENGINEER CLIFTON T. REGISTER
P.E. 11/24/2020 | 6:37 AM PST

STATE OF NORTH CAROLINA DEPARTMENT OF TRANSPORTATION

DocuSign Envelope ID: 9865BA88-BB42-4A69-AC59-BE2C9B47307D

PROJECT REFERENCE NO.	SHEET NO.
B-4605	1A

DOCUMENT NOT CONSIDERED FINAL UNLESS ALL SIGNATURES COMPLETED

ROADWAY DESIGN ENGINEER

NORTH CAROLINA PROFESSIONAL SEAL 027418 ENGINEER MARCUS LOWERY

1/16/2020 | 6:04 PM EST

INDEX OF SHEETS

SHEET NUMBER	SHEET
1	TITLE SHEET
1A	INDEX OF SHEETS, GENERAL NOTES, AND LIST OF STANDARD DRAWINGS
1B	CONVENTIONAL SYMBOLS
2A–1	PAVEMENT SCHEDULE, TYPICAL SECTIONS, DETAIL FOR SHOULDER BERM GUTTER, DETAIL SHOWING METHOD OF WEDGING, AND INCIDENTAL MILLING DETAIL
2C–1 THRU 2C–2	DETAIL SHEETS FOR MODIFIED RAIL SECTION AND TYPE III UNIT
3B–1	SUMMARY OF EARTHWORK, PAVEMENT REMOVAL SUMMARY, SHOULDER BERM GUTTER SUMMARY, & GUARDRAIL SUMMARY
3D–1	DRAINAGE SUMMARY
3G–1	GEOTECHNICAL SUMMARY
04	PLAN / PROFILE SHEET
RW02C–1 AND RW03E–1	RIGHT OF WAY SHEETS
EC–1 THRU EC–5	EROSION CONTROL PLANS
UO–1 THRU UO–2	UTILITIES BY OTHERS PLANS
X–1A	CROSS SECTION SUMMARY SHEET
X–1 THRU X–3	CROSS SECTIONS
S–1 THRU S–22	STRUCTURE PLANS

GENERAL NOTES

GENERAL NOTES: 2018 SPECIFICATIONS EFFECTIVE: 01–16–2018
REVISED:

GRADE LINE:
GRADING AND SURFACING OR RESURFACING AND WIDENING:

THE GRADE LINES SHOWN DENOTE THE FINISHED ELEVATION OF THE PROPOSED SURFACING AT GRADE POINTS SHOWN ON THE TYPICAL SECTIONS. WHERE NO GRADE LINES ARE SHOWN, THE PROFILES SHOWN DENOTE THE TOP ELEVATION OF THE EXISTING PAVEMENT ALONG THE CENTER LINE OF SURVEY ON WHICH THE PROPOSED RESURFACING WILL BE PLACED. GRADE LINES MAY BE ADJUSTED BY THE ENGINEER IN ORDER TO SECURE A PROPER TIE–IN.

CLEARING:

CLEARING ON THIS PROJECT SHALL BE PERFORMED TO THE LIMITS ESTABLISHED BY METHOD II.

SUPERELEVATION:

ALL CURVES ON THIS PROJECT SHALL BE SUPERELEVATED IN ACCORDANCE WITH STD. NO. 225.04 USING THE RATE OF SUPERELEVATION AND RUNOFF SHOWN ON THE PLANS. SUPERELEVATION IS TO BE REVOLVED ABOUT THE GRADE POINTS SHOWN ON THE TYPICAL SECTIONS.

SHOULDER CONSTRUCTION:

ASPHALT, EARTH, AND CONCRETE SHOULDER CONSTRUCTION ON THE HIGH SIDE OF SUPERELEVATED CURVES SHALL BE IN ACCORDANCE WITH STD. NO. 560.01

SUBSURFACE DRAINS:

SUBSURFACE DRAINS SHALL BE CONSTRUCTED IN ACCORDANCE WITH STD. NO. 815.02 AT LOCATIONS DIRECTED BY THE ENGINEER.

GUARDRAIL:

THE GUARDRAIL LOCATIONS SHOWN ON THE PLANS MAY BE ADJUSTED DURING CONSTRUCTION AS DIRECTED BY THE ENGINEER. THE CONTRACTOR SHOULD CONSULT WITH THE ENGINEER PRIOR TO ORDERING GUARDRAIL MATERIAL.

SUBSURFACE PLANS:

STRUCTURE SUBSURFACE PLANS ARE AVAILABLE ON THIS PROJECT.

END BENTS:

THE ENGINEER SHALL CHECK THE STRUCTURE END BENT PLANS, DETAILS, AND CROSS–SECTION PRIOR TO SETTING OF THE SLOPE STAKES FOR THE EMBANKMENT OR EXCAVATION APPROACHING A BRIDGE.

UTILITIES:

UTILITY OWNERS ON THIS PROJECT ARE

POWER — GREENVILLE UTILITIES COMMISSION & DUKE ENERGY TRANSMISSION

TELECOM — CENTURYLINK

WATER — EASTERN PINES WATER CORPORATION

ANY RELOCATION OF EXISTING UTILITIES WILL BE ACCOMPLISHED BY OTHERS.

RIGHT–OF–WAY MARKERS:

ALL RIGHT–OF–WAY MARKERS ON THIS PROJECT SHALL BE PLACED BY OTHERS.

STANDARD DRAWINGS

2018 ROADWAY ENGLISH STANDARD DRAWINGS EFF. 01–16–2018
REV.

The following Roadway Standards as appear in "Roadway Standard Drawings" Highway Design Branch – N. C. Department of Transportation – Raleigh, N. C., Dated January, 2018 are applicable to this project and by reference hereby are considered a part of these plans:

STD.NO.	TITLE
DIVISION 2 – EARTHWORK	
200.02	Method of Clearing – Method II
225.02	Guide for Grading Subgrade – Secondary and Local
225.04	Method of Obtaining Superelevation – Two Lane Pavement
DIVISION 3 – PIPE CULVERTS	
300.01	Method of Pipe Installation
DIVISION 4 – MAJOR STRUCTURES	
422.02	Bridge Approach Fills – Type II Modiefied Approach Fill
DIVISION 5 – SUBGRADE, BASES AND SHOULDERS	
560.01	Method of Shoulder Construction – High Side of Superelevated Curve – Method I
DIVISION 8 – INCIDENTALS	
815.02	Subsurface Drain
840.00	Concrete Base Pad for Drainage Structures
840.25	Anchorage for Frames – Brick or Concrete or Precast
840.29	Frames and Narrow Slot Flat Grates
840.35	Traffic Bearing Grated Drop Inlet – for Cast Iron Double Frame and Grates
840.46	Traffic Bearing Precast Drainage Structures
840.66	Drainage Structure Steps
846.01	Concrete Curb, Gutter and Curb & Gutter
846.04	Drop Inlet Installation in Shoulder Berm Gutter
862.01	Guardrail Placement
862.02	Guardrail Installation
862.03	Structure Anchor Units
876.02	Guide for Rip Rap at Pipe Outlets

1/16/2020
X:\NCDOT\B-4605\Roadway\Proj\b4605_rdy_psh_1a.dgn
USERNAME(lowery)

12/2/2016

PROJECT REFERENCE NO.	SHEET NO.
B-4605	IB

STATE OF NORTH CAROLINA, DIVISION OF HIGHWAYS

CONVENTIONAL PLAN SHEET SYMBOLS

Note: Not to Scale

**S.U.E. = Subsurface Utility Engineering*

BOUNDARIES AND PROPERTY:

- State Line
- County Line
- Township Line
- City Line
- Reservation Line
- Property Line
- Existing Iron Pin — EIP
- Computed Property Corner
- Property Monument — ECM
- Parcel/Sequence Number — 123
- Existing Fence Line
- Proposed Woven Wire Fence
- Proposed Chain Link Fence
- Proposed Barbed Wire Fence
- Existing Wetland Boundary — WLB
- Proposed Wetland Boundary — WLB
- Existing Endangered Animal Boundary — EAB
- Existing Endangered Plant Boundary — EPB
- Existing Historic Property Boundary — HPB
- Known Contamination Area: Soil — S
- Potential Contamination Area: Soil — S
- Known Contamination Area: Water — W
- Potential Contamination Area: Water — W
- Contaminated Site: Known or Potential

BUILDINGS AND OTHER CULTURE:

- Gas Pump Vent or U/G Tank Cap
- Sign — S
- Well — W
- Small Mine
- Foundation
- Area Outline
- Cemetery
- Building
- School
- Church
- Dam

HYDROLOGY:

- Stream or Body of Water
- Hydro, Pool or Reservoir
- Jurisdictional Stream — JS
- Buffer Zone 1 — BZ 1
- Buffer Zone 2 — BZ 2
- Flow Arrow
- Disappearing Stream
- Spring
- Wetland
- Proposed Lateral, Tail, Head Ditch — FLOW
- False Sump

RAILROADS:

- Standard Gauge — CSX TRANSPORTATION
- RR Signal Milepost — MILEPOST 35
- Switch — SWITCH
- RR Abandoned
- RR Dismantled

RIGHT OF WAY & PROJECT CONTROL:

- Secondary Horiz and Vert Control Point
- Primary Horiz Control Point
- Primary Horiz and Vert Control Point
- Exist Permanent Easment Pin and Cap
- New Permanent Easement Pin and Cap
- Vertical Benchmark
- Existing Right of Way Marker
- Existing Right of Way Line
- New Right of Way Line — RW
- New Right of Way Line with Pin and Cap — RW
- New Right of Way Line with Concrete or Granite R/W Marker — RW
- New Control of Access Line with Concrete C/A Marker — CA
- Existing Control of Access — CA
- New Control of Access — CA
- Existing Easement Line — E
- New Temporary Construction Easement — E
- New Temporary Drainage Easement — TDE
- New Permanent Drainage Easement — PDE
- New Permanent Drainage / Utility Easement — DUE
- New Permanent Utility Easement — PUE
- New Temporary Utility Easement — TUE
- New Aerial Utility Easement — AUE

ROADS AND RELATED FEATURES:

- Existing Edge of Pavement
- Existing Curb
- Proposed Slope Stakes Cut — C
- Proposed Slope Stakes Fill — F
- Proposed Curb Ramp — CR
- Existing Metal Guardrail
- Proposed Guardrail
- Existing Cable Guiderail
- Proposed Cable Guiderail
- Equality Symbol
- Pavement Removal

VEGETATION:

- Single Tree
- Single Shrub
- Hedge
- Woods Line
- Orchard
- Vineyard — Vineyard

EXISTING STRUCTURES:

MAJOR:

- Bridge, Tunnel or Box Culvert — CONC
- Bridge Wing Wall, Head Wall and End Wall — CONC WW

MINOR:

- Head and End Wall — CONC HW
- Pipe Culvert
- Footbridge
- Drainage Box: Catch Basin, DI or JB — CB
- Paved Ditch Gutter
- Storm Sewer Manhole — S
- Storm Sewer — S

UTILITIES:

POWER:

- Existing Power Pole
- Proposed Power Pole
- Existing Joint Use Pole
- Proposed Joint Use Pole
- Power Manhole — P
- Power Line Tower
- Power Transformer
- U/G Power Cable Hand Hole
- H-Frame Pole
- U/G Power Line LOS B (S.U.E.*) — P
- U/G Power Line LOS C (S.U.E.*) — P
- U/G Power Line LOS D (S.U.E.*) — P

TELEPHONE:

- Existing Telephone Pole
- Proposed Telephone Pole
- Telephone Manhole — T
- Telephone Pedestal — T
- Telephone Cell Tower
- U/G Telephone Cable Hand Hole
- U/G Telephone Cable LOS B (S.U.E.*) — T
- U/G Telephone Cable LOS C (S.U.E.*) — T
- U/G Telephone Cable LOS D (S.U.E.*) — T
- U/G Telephone Conduit LOS B (S.U.E.*) — TC
- U/G Telephone Conduit LOS C (S.U.E.*) — TC
- U/G Telephone Conduit LOS D (S.U.E.*) — TC
- U/G Fiber Optics Cable LOS B (S.U.E.*) — T FO
- U/G Fiber Optics Cable LOS C (S.U.E.*) — T FO
- U/G Fiber Optics Cable LOS D (S.U.E.*) — T FO

WATER:

- Water Manhole — W
- Water Meter
- Water Valve
- Water Hydrant
- U/G Water Line LOS B (S.U.E*) — W
- U/G Water Line LOS C (S.U.E*) — W
- U/G Water Line LOS D (S.U.E*) — W
- Above Ground Water Line — A/G Water

TV:

- TV Pedestal — C
- TV Tower
- U/G TV Cable Hand Hole — HH
- U/G TV Cable LOS B (S.U.E.*) — TV
- U/G TV Cable LOS C (S.U.E.*) — TV
- U/G TV Cable LOS D (S.U.E.*) — TV
- U/G Fiber Optic Cable LOS B (S.U.E.*) — TV FO
- U/G Fiber Optic Cable LOS C (S.U.E.*) — TV FO
- U/G Fiber Optic Cable LOS D (S.U.E.*) — TV FO

GAS:

- Gas Valve
- Gas Meter
- U/G Gas Line LOS B (S.U.E.*) — G
- U/G Gas Line LOS C (S.U.E.*) — G
- U/G Gas Line LOS D (S.U.E.*) — G
- Above Ground Gas Line — A/G Gas

SANITARY SEWER:

- Sanitary Sewer Manhole
- Sanitary Sewer Cleanout
- U/G Sanitary Sewer Line — SS
- Above Ground Sanitary Sewer — A/G Sanitary Sewer
- SS Forced Main Line LOS B (S.U.E.*) — FSS
- SS Forced Main Line LOS C (S.U.E.*) — FSS
- SS Forced Main Line LOS D (S.U.E.*) — FSS

MISCELLANEOUS:

- Utility Pole
- Utility Pole with Base
- Utility Located Object
- Utility Traffic Signal Box — S
- Utility Unknown U/G Line LOS B (S.U.E.*) — ?UTL
- U/G Tank; Water, Gas, Oil
- Underground Storage Tank, Approx. Loc. — UST
- A/G Tank; Water, Gas, Oil
- Geoenvironmental Boring
- U/G Test Hole LOS A (S.U.E.*)
- Abandoned According to Utility Records — AATUR
- End of Information — E.O.I.

DocuSign Envelope ID: E4B94025-F0A9-44FF-B425-8B199948D4D0

5/14/99

PROJECT REFERENCE NO.	SHEET NO.
B-4605	2A-1
R/W SHEET NO.	

ROADWAY DESIGN ENGINEER

NORTH CAROLINA PROFESSIONAL SEAL 027418 ENGINEER MARCUS LOVERN

1/6/2020 | 10:52 AM EST

DOCUMENT NOT CONSIDERED FINAL UNLESS ALL SIGNATURES COMPLETED

TGS ENGINEERS
706 HILLSBOROUGH ST. SUITE 200
RALEIGH, NC 27603
PH (919) 773-8887
CORP. LICENSE NO.: C-0275

PAVEMENT SCHEDULE

FINAL PAVEMENT DESIGN: MARCH 9, 2018

C1	PROP. APPROX. 1½" ASPHALT CONCRETE SURFACE COURSE, TYPE S9.5B, AT AN AVERAGE RATE OF 165 LBS. PER SQ. YD.
C2	PROP. APPROX. 3" ASPHALT CONCRETE SURFACE COURSE, TYPE S9.5B, AT AN AVERAGE RATE OF 165 LBS. PER SQ. YD. IN EACH OF TWO LAYERS.
C3	PROP. VAR. DEPTH ASPHALT CONCRETE SURFACE COURSE, TYPE S9.5B, AT AN AVERAGE RATE OF 110 LBS. PER SQ. YD. PER 1" DEPTH. TO BE PLACED IN LAYERS NOT LESS THAN 1½" IN DEPTH OR GREATER THAN 2" IN DEPTH.
E1	PROP. APPROX. 5" ASPHALT CONCRETE BASE COURSE, TYPE B25.0C, AT AN AVERAGE RATE OF 570 LBS. PER SQ. YD.
E2	PROP. APPROX. 6" ASPHALT CONCRETE BASE COURSE, TYPE B25.0C, AT AN AVERAGE RATE OF 342 LBS. PER SQ. YD. IN EACH OF TWO LAYERS.
E3	PROP. VAR. DEPTH ASPHALT CONCRETE BASE COURSE, TYPE B25.0C, AT AN AVERAGE RATE OF 114 LBS. PER SQ. YD. PER 1" DEPTH. TO BE PLACED IN LAYERS NOT LESS THAN 3" IN DEPTH OR GREATER THAN 5½" IN DEPTH.
R	CONCRETE SHOULDER BERM GUTTER
T	EARTH MATERIAL
U	EXISTING PAVEMENT
V1	MILLING BITUMINOUS PAVEMENT (VAR. 0"- 1½" DEPTH - SEE DETAIL THIS SHEET)
W	VARIABLE DEPTH ASPHALT PAVEMENT (SEE WEDGING DETAIL)

NOTE: PAVEMENT EDGE SLOPES ARE 1:1 UNLESS SHOWN OTHERWISE.

DETAIL FOR SHOULDER BERM GUTTER

SEE CORRESPONDING TYPICAL SECTION FOR PAVEMENT DESIGN.
SEE TYPICAL SECTIONS AND PLANS FOR ACTUAL DIMENSIONS.

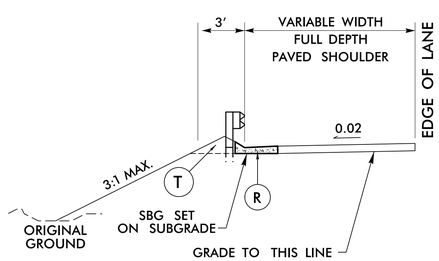

LINE	STATIONS
-L-	13+13.00 to 13+29.38 LT & RT
-L-	14+93.63 to 15+10.00 LT & RT

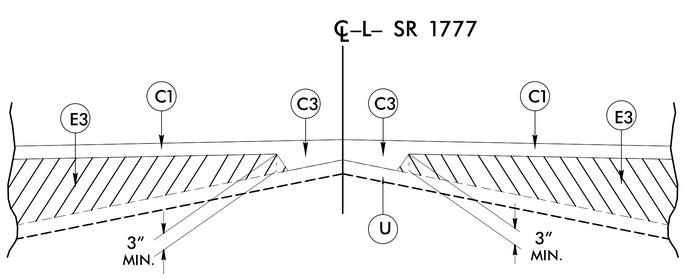

Detail Showing Method of Wedging (W)

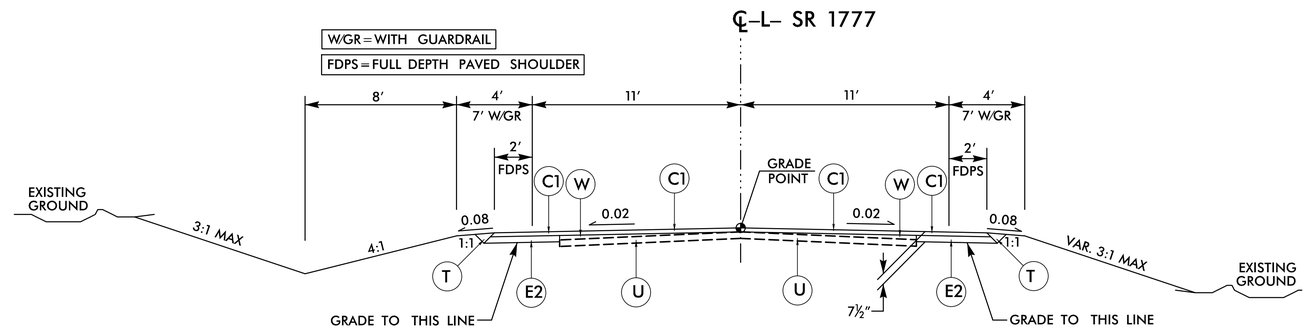

TYPICAL SECTION NO. 1

USE TYPICAL SECTION NO. 1 AS FOLLOWS:

FROM -L- STA 11+50.00 TO STA 12+97.00
FROM -L- STA 15+32.00 TO STA 17+00.00

NOTE: TRANSITION FROM EXISTING PAVEMENT WIDTH TO TYPICAL SECTION NO. 1 -L- STA 11+50.00 TO STA 12+00.00
TRANSITION FROM TYPICAL SECTION NO. 1 TO EXISTING PAVEMENT WIDTH -L- 16+75.00 TO STA 17+00.00

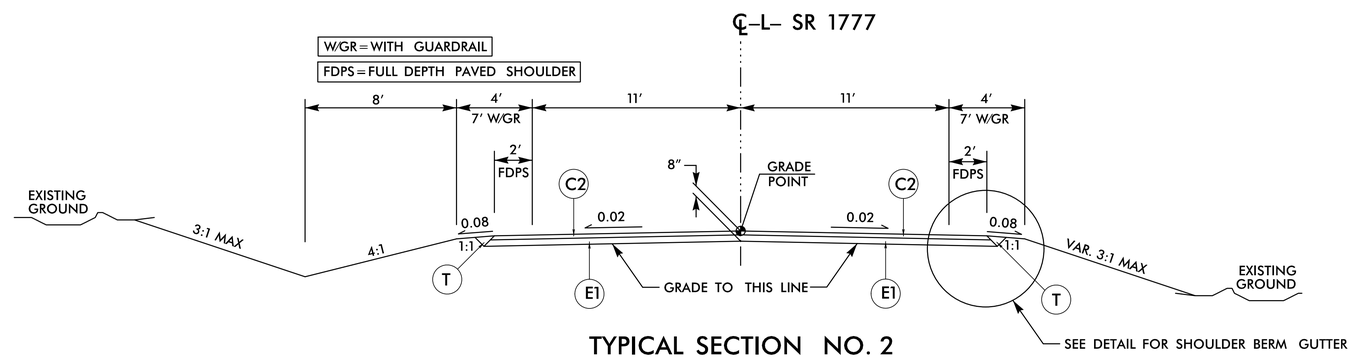

TYPICAL SECTION NO. 2

USE TYPICAL SECTION NO. 2 AS FOLLOWS:

FROM -L- STA 12+97.00 TO STA 13+40.25 (BEGIN BRIDGE)
FROM -L- STA 14+82.75 (END BRIDGE) TO STA 15+32.00

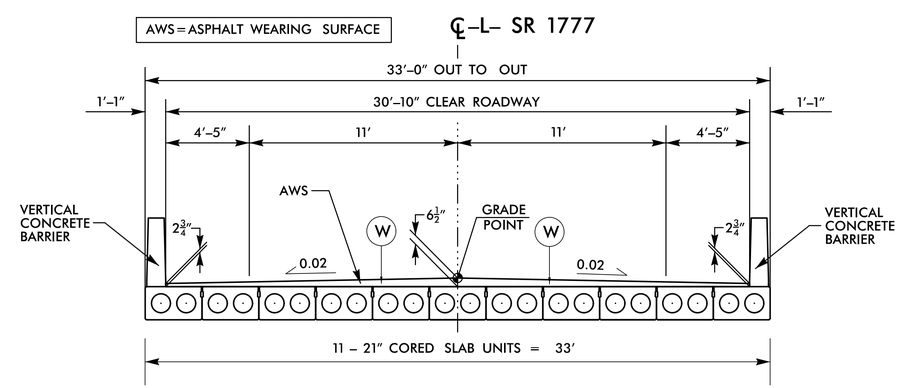

TYPICAL SECTION NO. 3

USE TYPICAL SECTION NO. 3 AS FOLLOWS:

FROM -L- STA 13+40.25 (BEGIN BRIDGE) TO STA 14+82.75 (END BRIDGE)

NOTE: SEE STRUCTURE PLANS FOR BRIDGE CONSTRUCTION DETAILS INCLUDING BARRIER RAIL HEIGHT AND ASPHALT THICKNESS DIMENSIONS

INCIDENTAL MILLING DETAIL

NOTE: MIRROR FOR END OF CONSTRUCTION

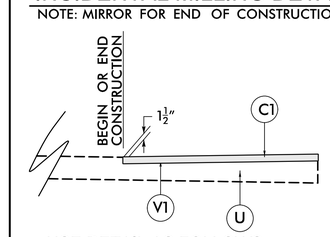

USE DETAIL AS FOLLOWS:

MILLING AND OVERLAY FOR TIE-INS:
-L- STA. 11+50.00 TO -L- STA. 12+70.00
-L- STA. 15+70.00 TO -L- STA 17+00.00

12/13/2019
X:\NCDOT\B4605\Roadway\Proj\b4605_rdy_typ.dgn
jsbrown (Lovern)

DocuSign Envelope ID: E4B94025-F0A9-44FF-B425-8B199948D4D0

PROJECT REFERENCE NO.	SHEET NO.
B-4605	2C-1

DOCUMENT NOT CONSIDERED FINAL UNLESS ALL SIGNATURES COMPLETED

STATE OF NORTH CAROLINA
DEPT. OF TRANSPORTATION
DIVISION OF HIGHWAYS
RALEIGH, N.C.

ROADWAY DETAIL DRAWING FOR
GUARDRAIL INSTALLATION

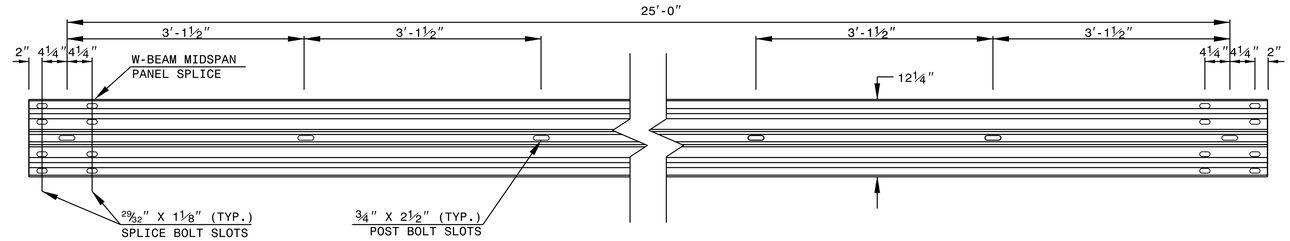

STANDARD W-BEAM GUARDRAIL

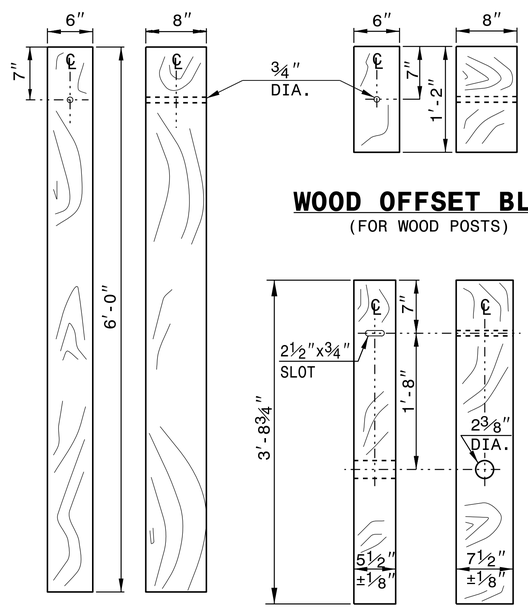

STANDARD LINE POST

WOOD OFFSET BLOCK
(FOR WOOD POSTS)

SHORT WOOD BREAKAWAY POST

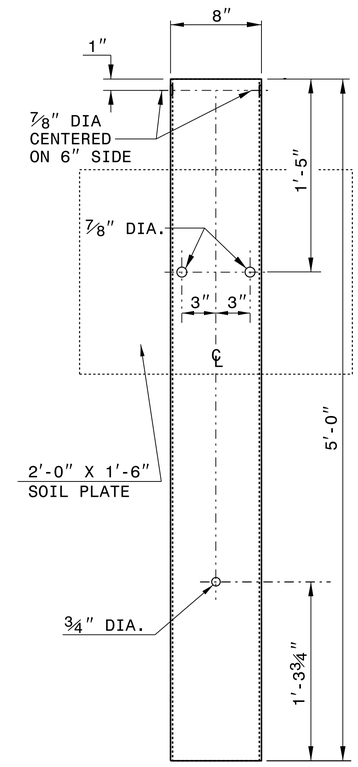

STEEL TUBE
TS 6"x8"x0.1875"

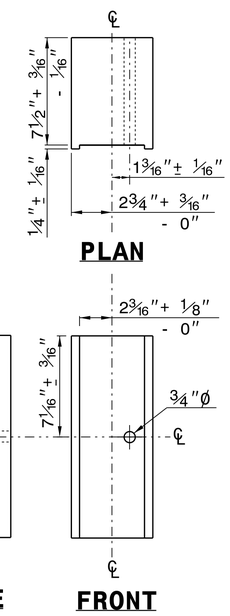

ROUTED OFFSET BLOCK

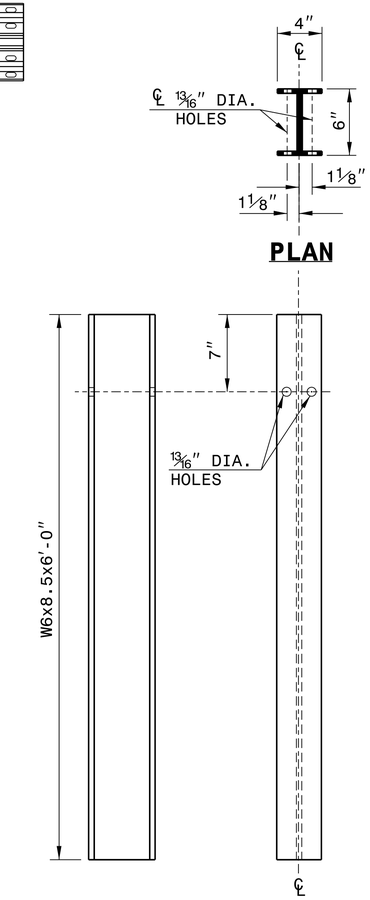

"W6" STEEL POST

SYSTEM PARTS

SHEET 6 OF 8
862D02

STATE OF NORTH CAROLINA
DEPT. OF TRANSPORTATION
DIVISION OF HIGHWAYS
RALEIGH, N.C.

ROADWAY DETAIL DRAWING FOR
GUARDRAIL INSTALLATION

SHEET 6 OF 8
862D02

1/6/2020 | 10:55 AM EST

CONTRACTS STANDARDS AND DEVELOPMENT UNIT
Office 919-707-6950 FAX 919-250-4119

SEE TITLE BLOCK

ORIGINAL BY: J.HOWERTON DATE: 3-7-2018
MODIFIED BY: DATE:
CHECKED BY: DATE:
FILE SPEC.:

DocuSign Envelope ID: E4894025-F043-44FF-B425-8B1994B3D4D0

14-DEC-2017 10:36
S:\Contracts\Contracts\Special Details\jhowerton\Standard Drawings\2018 Standard Drawings\Details in Lieu of Standards\Division 8\0862d0301.dgn
jhowerton AT CSD-292595

STATE OF NORTH CAROLINA
DEPT. OF TRANSPORTATION
DIVISION OF HIGHWAYS
RALEIGH, N.C.

ROADWAY DETAIL DRAWING FOR
STRUCTURE ANCHOR UNITS
GUARDRAIL ANCHOR UNIT, TYPE III
FOR ATTACHMENT TO RAIL ON BRIDGE

SHEET 1 OF 7
862D03

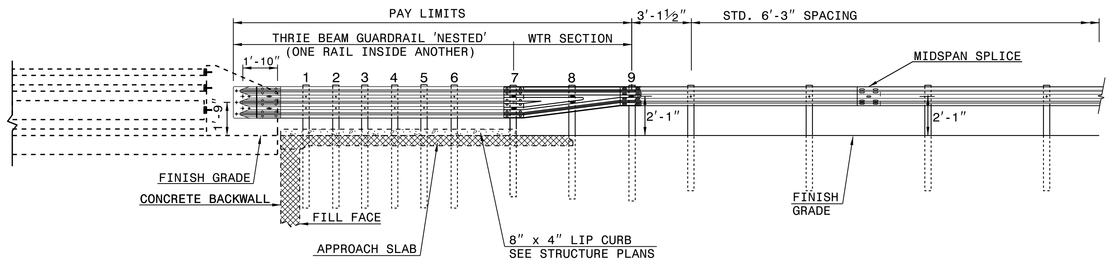

ELEVATION

NOTE:
**POST NOT REQUIRED FOR SKEW ANGLES GREATER THAN 150° OR LESS THAN 30° UNLESS OTHERWISE DIRECTED BY THE ENGINEER.
*THE DISTANCE FROM END OF BRIDGE RAIL TO CENTER LINE OF THE FIRST POST SHOULD BE 11½" IF CONCRETE BACKWALL IS NOT PRESENT.
-SHOULDER BERM GUTTER MUST BE INSTALLED TO THE LIMITS 8" x 4" LIP CURB IS SHOWN IF ANCHOR UNIT IS NOT ADJACENT TO AN APPROACH SLAB.
-MEASURE GUARDRAIL HEIGHT FROM THE TOP OF ADJACENT SURFACE (SHOULDER, BERM, OR GUTTER).
-LAP JOINTS IN THE DIRECTION OF TRAFFIC FLOW.
-SEE SHEET 3 FOR POST SECTIONS 1 THRU 9.

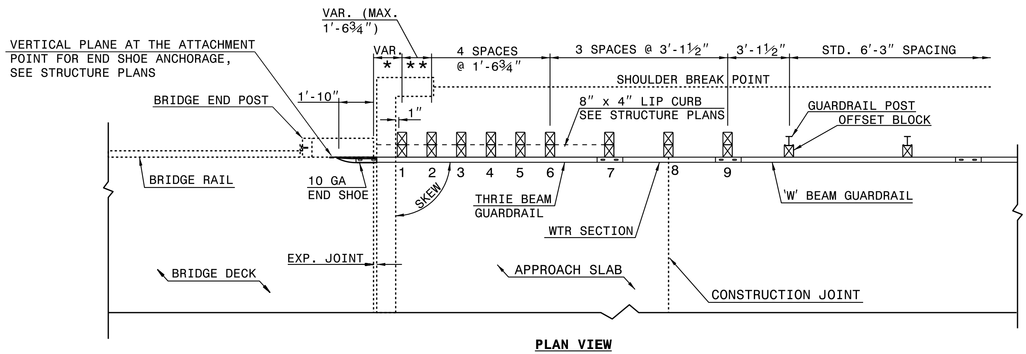

PLAN VIEW

GUARDRAIL ANCHOR UNIT, TYPE III FOR ATTACHMENT TO RAIL ON BRIDGE

STATE OF NORTH CAROLINA
DEPT. OF TRANSPORTATION
DIVISION OF HIGHWAYS
RALEIGH, N.C.

ROADWAY DETAIL DRAWING FOR
STRUCTURE ANCHOR UNITS
GUARDRAIL ANCHOR UNIT, TYPE III
FOR ATTACHMENT TO RAIL ON BRIDGE

SHEET 1 OF 7
862D03

STATE OF NORTH CAROLINA
DEPT. OF TRANSPORTATION
DIVISION OF HIGHWAYS
RALEIGH, N.C.

ROADWAY DETAIL DRAWING FOR
STRUCTURE ANCHOR UNITS
GUARDRAIL ANCHOR UNIT, TYPE III FOR ATTACHMENT TO
RAIL ON BRIDGE - SUB REGIONAL TIER

SHEET 2 OF 7
862D03

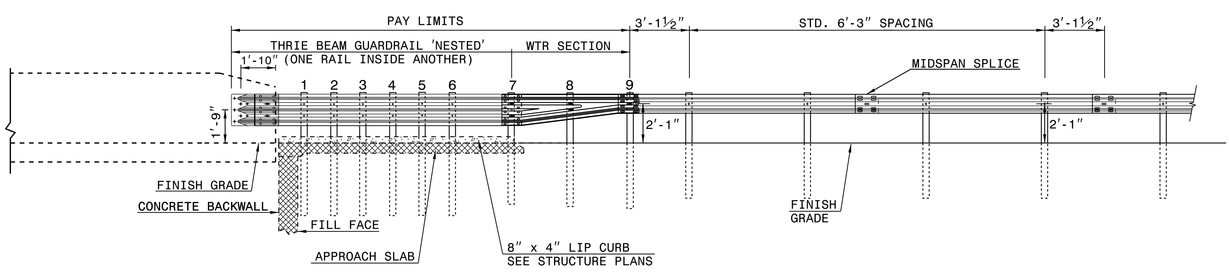

ELEVATION

NOTE:
**POST NOT REQUIRED FOR SKEW ANGLES GREATER THAN 150° OR LESS THAN 30° UNLESS OTHERWISE DIRECTED BY THE ENGINEER.
*THE DISTANCE FROM END OF BRIDGE RAIL TO CENTER LINE OF THE FIRST POST SHOULD BE 11½" IF CONCRETE BACKWALL IS NOT PRESENT.
-SHOULDER BERM GUTTER MUST BE INSTALLED TO THE LIMITS 8" x 4" LIP CURB IS SHOWN IF ANCHOR UNIT IS NOT ADJACENT TO AN APPROACH SLAB.
-MEASURE GUARDRAIL HEIGHT FROM THE TOP OF ADJACENT SURFACE (SHOULDER, BERM, OR GUTTER).
-LAP JOINTS IN THE DIRECTION OF TRAFFIC FLOW.
-SEE SHEET 3 FOR POST SECTIONS 1 THRU 9.

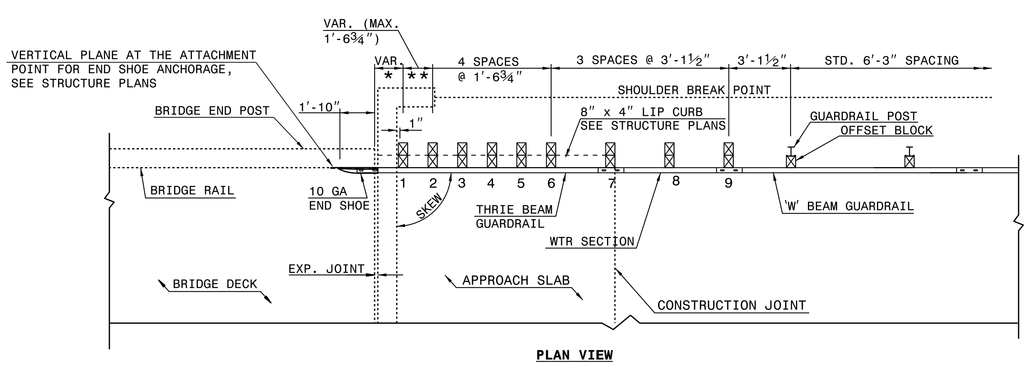

PLAN VIEW

GUARDRAIL ANCHOR UNIT, TYPE III FOR ATTACHMENT TO RAIL ON BRIDGE - SUB REGIONAL TIER

STATE OF NORTH CAROLINA
DEPT. OF TRANSPORTATION
DIVISION OF HIGHWAYS
RALEIGH, N.C.

ROADWAY DETAIL DRAWING FOR
STRUCTURE ANCHOR UNITS
GUARDRAIL ANCHOR UNIT, TYPE III FOR ATTACHMENT TO
RAIL ON BRIDGE - SUB REGIONAL TIER

SHEET 2 OF 7
862D03

CONTRACT STANDARDS AND DEVELOPMENT UNIT
Office 919-707-6950 FAX 919-250-4119

SEE TITLE BLOCK

ORIGINAL BY: J. HOWERTON DATE: 06-22-12
MODIFIED BY: DATE:
CHECKED BY: DATE:
FILE SPEC.:

DOCUMENT NOT CONSIDERED FINAL UNLESS ALL SIGNATURES COMPLETED

1/6/2020 | 10:15:15 AM EST
J. Howerton

PROJECT REFERENCE NO. B-4605
SHEET NO. 2C-2

COMPUTED BY: VML	DATE: 27 AUG 2018
CHECKED BY: ARM	DATE: 27 AUG 2018

STATE OF NORTH CAROLINA
DIVISION OF HIGHWAYS

PROJECT REFERENCE NO.	SHEET NO.
B-4605	3B-1

SUMMARY OF EARTHWORK
IN CUBIC YARDS

LOCATION	UNCLASSIFIED EXCAVATION	UNDERCUT	EMBT+%	BORROW	WASTE
–L– 11+50.00 TO 13+40.25 (BEGIN BRIDGE)	31		110	79	
–L– 14+82.75 (END BRIDGE) TO 17+00.00	24		46	22	
SUBTOTAL	55		156	101	
PROJECT TOTAL	55		156	101	
EST. 5% TO REPLACE TOP SOIL ON BORROW PIT				5	
GRAND TOTAL	55		156	106	
SAY	70			120	

PER GEOTECHNICAL RECOMMENDATIONS:
ESTIMATED UNDERCUT = 300 CY (CONTINGENCY, AS DIRECTED BY THE ENGINEER)

Approximate quantities only. Clearing and Grubbing, Unclassified Excavation, Borrow Excavation, Fine Grading, and Removal of Existing Asphalt Pavement will be paid for at the contract lump sum price for "Grading".

PAVEMENT REMOVAL SUMMARY
IN SQUARE YARDS

SURVEY LINE	STATION	STATION	LOCATION LT/RT/CL	SY
–L–	11+50	12+97	LT	5.7
–L–	11+50	12+97	RT	3.4
–L–	12+97	13+68	CL	192.9
–L–	14+57	15+32	CL	199.9
–L–	15+32	16+28	RT	1.3
–L–	15+86	17+00	LT	1.3
			TOTAL:	404.5
			SAY:	410

SHOULDER BERM GUTTER SUMMARY

SURVEY LINE	STATION	STATION	LOCATION	LENGTH (LF)
–L–	13+13.00	13+29.38	LT	16.38
–L–	13+13.00	13+29.38	RT	16.38
–L–	14+93.63	15+10.00	LT	16.37
–L–	14+93.63	15+10.00	RT	16.37
			TOTAL:	65.50
			SAY:	66

"N" = DISTANCE FROM EDGE OF LANE TO FACE OF GUARDRAIL.
TOTAL SHOULDER WIDTH = DISTANCE FROM EDGE OF TRAVEL LANE TO SHOULDER BREAK POINT.
FLARE LENGTH = DISTANCE FROM LAST SECTION OF PARALLEL GUARDRAIL TO END OF GUARDRAIL.
W = TOTAL WIDTH OF FLARE FROM BEGINNING OF TAPER TO END OF GUARDRAIL.
G = GATING IMPACT ATTENUATOR TYPE 350
NG = NON–GATING IMPACT ATTENUATOR TYPE 350

GUARDRAIL SUMMARY

SURVEY LINE	BEG. STA.	END STA.	LOCATION	LENGTH			WARRANT POINT		"N" DIST. FROM E.O.L.	TOTAL SHOUL. WIDTH	FLARE LENGTH		W		ANCHORS								IMPACT ATTENUATOR TYPE 350			SINGLE FACED GUARDRAIL	REMOVE EXISTING GUARDRAIL	REMOVE AND STOCKPILE EXISTING GUARDRAIL	REMARKS
				STRAIGHT	SHOP CURVED	DOUBLE FACED	APPROACH END	TRAILING END			APPROACH END	TRAILING END	APPROACH END	TRAILING END	TYPE GREU, TL–3	CAT–1	AT–1	TYPE III	B–77				EA	G	NG				
–L–	12+59.00	13+40.25	LT	81.25′				12+59.00	4′–5″	7′		50′		1′	1			1											
–L–	14+82.75	15+64.00	LT	81.25′			15+64.00		4′–5″	7′	50′		1′		1			1											
–L–	12+59.00	13+40.25	RT	81.25′			12+59.00		4′–5″	7′	50′		1′		1			1											
–L–	14+82.75	15+64.00	RT	81.25′				15+64.00	4′–5″	7′		50′		1′	1			1											
		SUBTOTAL (LF)		325′								TOTAL ANCHORS OR ATTENUATORS (EA)			4			4											
		LESS ANCHORS (LF)		275′																									
		TOTAL GUARDRAIL (LF)		50′								ANCHOR UNIT LENGTH (LF)			50′	6.25′	6.25′	18.75′	18.75′										
		SAY GUARDRAIL (LF)		50′			ADDITIONAL GUARDRAIL POSTS: SAY 5 EA					DEDUCTION PER TYPE (LF)			200′			75′											
												TOTAL DEDUCTION (LF)			275.00′														

12/06/07

12/16/2019
K:\C60081_B-4605\Roadway\Proj\b4605_rdy_psh_3b-1.dgn
(jsmith)

COMPUTED BY: Tucker Ennis, EI DATE: 6/6/2018

CHECKED BY: Ben Henegar, PE DATE: 6/6/2018

NORTH CAROLINA DEPARTMENT OF TRANSPORTATION
DIVISION OF HIGHWAYS

Pitt County
Bridge #730005

PROJECT NO.	SHEET NO.
B-4605	3D-1

Note: Invert Elevations indicated are for Bid Purposes only and shall not be used for project construction stakeout. See "Standard Specifications For Roads and Structures, Section 300-5".

LIST OF PIPES, ENDWALLS, ETC. (FOR PIPES 48 INCHES & UNDER)

| STATION | LOCATION (LT, RT, OR CL)' | STRUCTURE NO. FROM | STRUCTURE NO. TO | TOP ELEVATION | INVERT ELEVATION | INVERT ELEVATION | SLOPE CRITICAL | DRAINAGE PIPE (RCP, CSP, CAAP, HDPE, or PVC) SIZE 12" | 15" | 18" | 24" | 30" | 36" | 42" | 48" | DO NOT USE RCP | DO NOT USE CSP | DO NOT USE CAAP | DO NOT USE HDPE | C.S. PIPE SIZE 12" THICKNESS OR GAUGE .064 | 15" .064 | 18" .064 | 24" .064 | 30" .079 | 36" .079 | 42" .109 | 48" .109 | R.C. PIPE CLASS III 12" | 15" | 18" | 24" | 30" | 36" | 42" | 48" | R.C. PIPE CLASS IV 12" | 15" | 18" | 24" | 30" | 36" | 42" | 48" | ** " R.C. PIPE (CLASS V) | *** " RC PIPE CULVERTS, CONTRACTOR DESIGN | **** " RC PIPE CULVERTS, CONTRACTOR DESIGN | 15" SIDE DRAIN PIPE | 18" SIDE DRAIN PIPE | ENDWALLS STD. 838.01 838.11 OR STD. 838.80 (UNLESS NOTED OTHERWISE) CU. YARDS | QUANTITIES FOR DRAINAGE STRUCTURES PER EACH (0' THRU 5.0') | LIN. FT. A 5.0' THRU 10.0' | LIN. FT. B 10.0' AND ABOVE | *TOTAL L.F. FOR PAY QUANTITY SHALL BE COL. "A" + (1.3 X COL. "B") | C.B. STD. 840.01 OR STD. 840.02 | TYPE OF GRATE E | F | G | CONCRETE TRANSITIONAL SECTION DROP INLET | CATCH BASIN | T.B.D.I STD. 840.35 | FRAME AND NARROW FLAT GRATE, TWO GRATES, STD. 840.29 | 15" CSP ELBOW | | CONC. & BRICK PIPE PLUG, C.Y. STD. 840.71 | CONC. COLLARS CL. "B" C.Y. STD. 840.72 | PIPE REMOVAL LIN. FT. | REMARKS |
|---|---|---

COMPUTED BY: TYLER C. BOTTOMS DATE:6/14/18
CHECKED BY: James Batts DATE: 6/26/2018

(5-15-18)

PROJECT NO.	SHEET NO.
B-4605	3G-1

STATE OF NORTH CAROLINA
DIVISION OF HIGHWAYS

SUMMARY OF SUBSURFACE DRAINAGE

LINE	Station	Station	Location LT/RT/CL	Drain Type* UD/BD/SD	LF
CONTINGENCY				SD	200
				TOTAL LF:	200

***UD = Underdrain**
***BD = Blind Drain**
***SD = Subsurface Drain**

DocuSign Envelope ID: E4B94025-F0A9-44FF-B425-8B199948D4D0

PROJECT REFERENCE NO.	SHEET NO.
B-4605	04
R/W SHEET NO.	

ROADWAY DESIGN ENGINEER
NORTH CAROLINA PROFESSIONAL ENGINEER SEAL 027418 MARCUS LOWERY
1/6/2020 10:52 AM EST

HYDRAULICS ENGINEER
NORTH CAROLINA PROFESSIONAL ENGINEER SEAL 044158 BENJAMIN J. HERNCAR
1/6/2020 11:21 AM PST

DOCUMENT NOT CONSIDERED FINAL UNLESS ALL SIGNATURES COMPLETED

TGS ENGINEERS
706 HILLSBOROUGH ST. SUITE 200
RALEIGH, NC 27603
PH (919) 773-8887
CORP. LICENSE NO.: C-0275

NAD 83 NA 2011

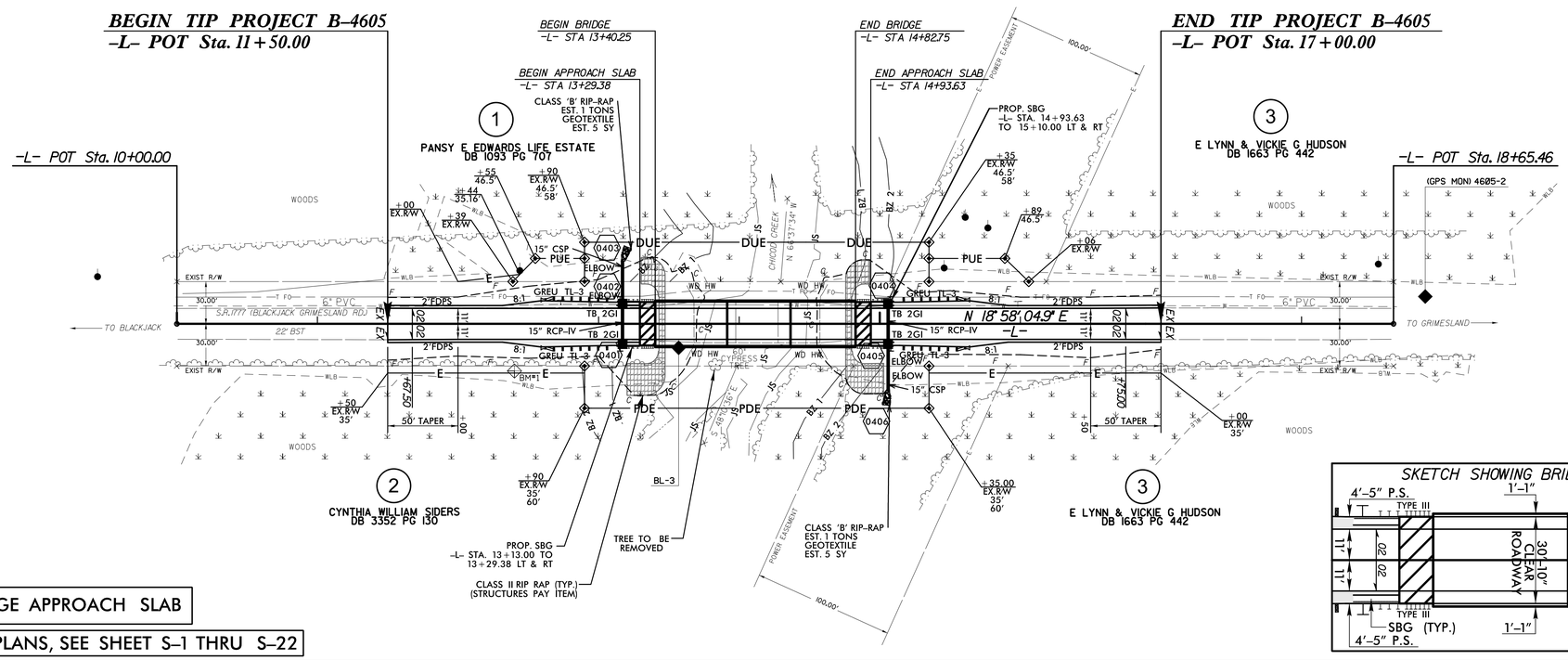

BRIDGE APPROACH SLAB

FOR STRUCTURE PLANS, SEE SHEET S-1 THRU S-22

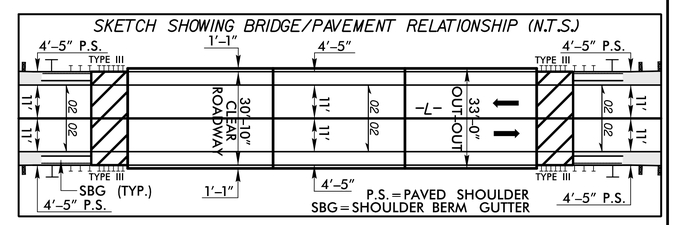

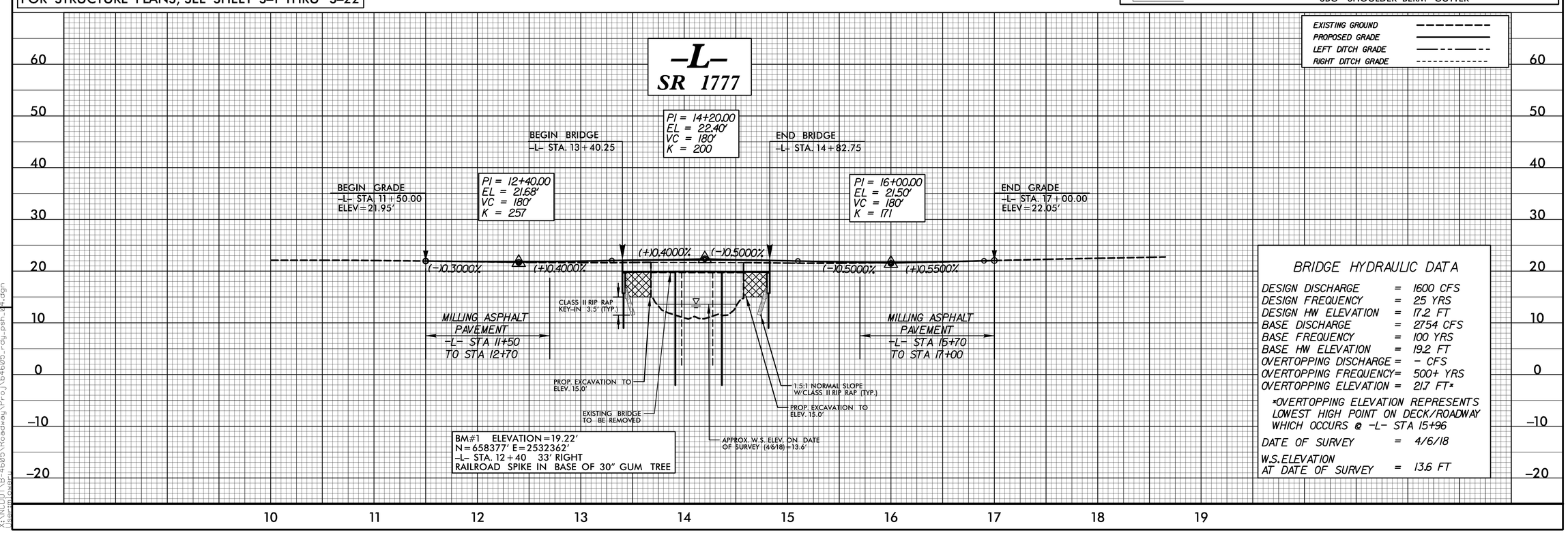

BRIDGE HYDRAULIC DATA

DESIGN DISCHARGE	=	1600 CFS
DESIGN FREQUENCY	=	25 YRS
DESIGN HW ELEVATION	=	17.2 FT
BASE DISCHARGE	=	2754 CFS
BASE FREQUENCY	=	100 YRS
BASE HW ELEVATION	=	19.2 FT
OVERTOPPING DISCHARGE	=	- CFS
OVERTOPPING FREQUENCY	=	500+ YRS
OVERTOPPING ELEVATION	=	21.7 FT*

*OVERTOPPING ELEVATION REPRESENTS LOWEST HIGH POINT ON DECK/ROADWAY WHICH OCCURS @ -L- STA 15+96

DATE OF SURVEY	=	4/6/18
W.S. ELEVATION AT DATE OF SURVEY	=	13.6 FT

REVISIONS

8/17/99

12/13/2019
R:\NCDOT\B-4605\Roadway\Proj\b4605_rdy_psh_04.dgn
(Benjamin Powell)

PROJECT REFERENCE NO.	SHEET NO.
B-4605	RW02C-1
LOCATION AND SURVEYS	

SURVEY CONTROL SHEET B-4605

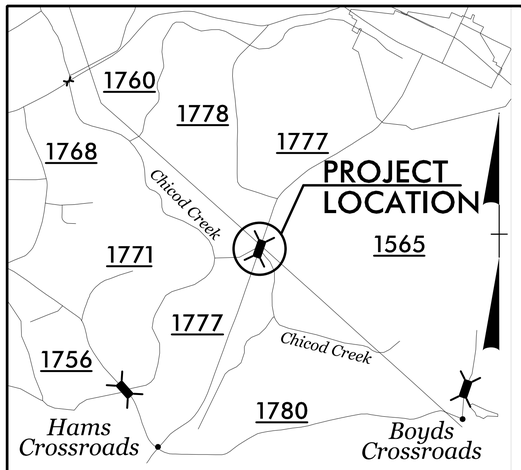

VICINITY MAP

CONTROL DATA

BL

POINT	DESC.	NORTH	EAST	ELEVATION	L STATION	OFFSET
B46051	B4605-1 (GPS MO	657872.2509	2532133.8158	21.27	OUTSIDE PROJECT LIMITS	
BL3	BL3	658492.4540	2532384.3740	20.46	13+56.91	17.00 RT
B46052	B4605-2 (GPS MO	659006.5470	2532522.5740	20.92	OUTSIDE PROJECT LIMITS	

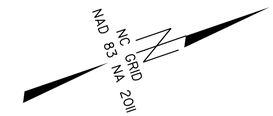

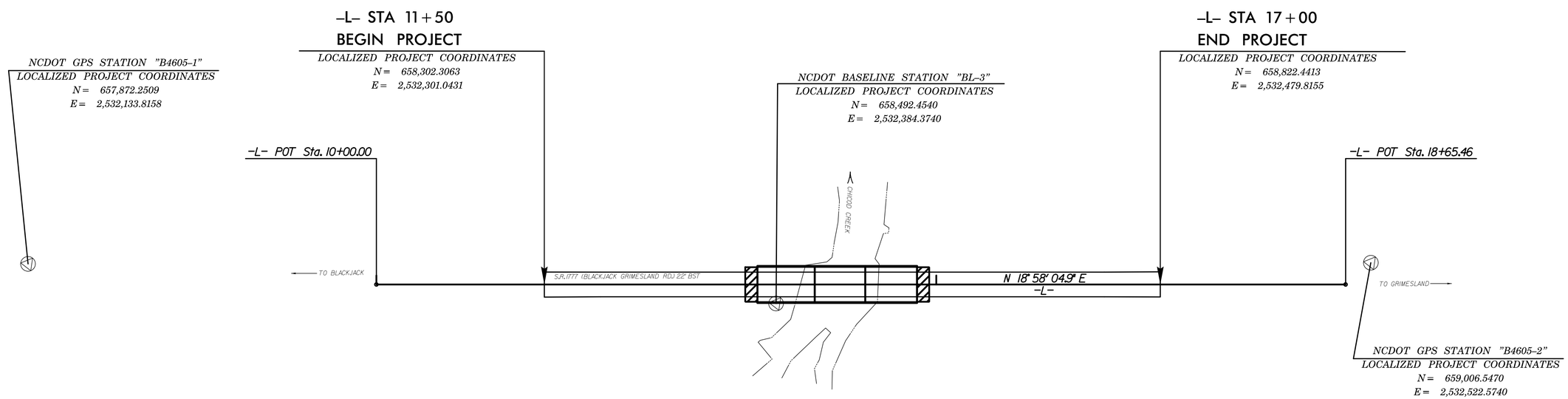

DATUM DESCRIPTION

THE LOCALIZED COORDINATE SYSTEM DEVELOPED FOR THIS PROJECT IS BASED ON THE STATE PLANE COORDINATES ESTABLISHED BY NCGS FOR MONUMENT "46051"
WITH NAD 83/NA 2011 STATE PLANE GRID COORDINATES OF
NORTHING: 657872.2509(ft) EASTING: 2532133.8158(ft)
ELEVATION: 21.27(ft)
THE AVERAGE COMBINED GRID FACTOR USED ON THIS PROJECT (GROUND TO GRID) IS: 0.999890276
THE N.C. LAMBERT GRID BEARING AND
LOCALIZED HORIZONTAL GROUND DISTANCE FROM
"B46051" TO -L- STATION 11+50 IS
N 21° 14' 54.96" E 461.42'
ALL LINEAR DIMENSIONS ARE LOCALIZED HORIZONTAL DISTANCES
VERTICAL DATUM USED IS NAVD 88

BENCHMARK DATA

```
*************************************
1348        ELEVATION = 19.22
N 658377       E 2532362
BL STATION 10+53.00 23 RIGHT
RRSPIKE30GUM
*************************************
```

NOTE: DRAWING NOT TO SCALE

NOTES:

THE CONTROL DATA FOR THIS PROJECT CAN BE FOUND ELECTRONICALLY BY SELECTING PROJECT CONTROL DATA AT:
HTTP://WWW.NCDOT.GOV/DOH/PRECONSTRUCT/HIGHWAY/LOCATION/PROJECT/

THE FILES TO BE FOUND ARE AS FOLLOWS:
TIP B4605_LS_CONTROL.TXT

SITE CALIBRATION INFORMATION HAS NOT BEEN PROVIDED FOR THIS PROJECT. IF FURTHER INFORMATION IS NEEDED, PLEASE CONTACT THE LOCATION AND SURVEYS UNIT.

INDICATES GEODETIC CONTROL MONUMENTS USED OR SET FOR HORIZONTAL PROJECT CONTROL BY THE NCDOT LOCATION AND SURVEYS UNIT.
PROJECT CONTROL ESTABLISHED USING GLOBAL POSITIONING SYSTEM.

PROJECT REFERENCE NO.	SHEET NO.
B-4605	RW03E-1

PERMANENT EASEMENT CONTROL SHEET

ROW MARKER PERMANENT EASEMENT-E

ALIGN	STATION	OFFSET	NORTH	EAST
L	12+39.00	-30.00	658396.2248	2532301.6007
*L	12+55.00	-46.50	658416.7192	2532291.1973
*L	12+90.00	-46.50	658449.8187	2532302.5737
L	12+90.00	-30.00	658444.4555	2532318.1778
*L	12+90.00	-58.00	658453.5567	2532291.6982
*L	12+90.00	60.00	658415.2019	2532403.2908
*L	12+90.00	30.00	658424.9531	2532374.9198
*L	15+35.00	30.00	658656.6496	2532454.5548
*L	15+35.00	60.00	658646.8984	2532482.9258
L	15+35.00	-30.00	658676.1520	2532397.8128
*L	15+35.00	-58.00	658685.2532	2532371.3332
*L	15+35.00	-46.50	658681.5152	2532382.2087
*L	15+89.00	-46.50	658732.5830	2532399.7609
L	16+06.00	-30.00	658743.2967	2532420.8906

** ASTERISKS INDICATE IRON PIN AND CAPS UNABLE TO BE SET DUE TO CONDITIONS OF THE AREA*

NOTES:

1. IF FURTHER INFORMATION REGARDING PROJECT CONTROL IS NEEDED, PLEASE CONTACT THE LOCATION AND SURVEYS UNIT.

2. PROJECT CONTROL WAS ESTABLISHED USING GNSS, THE GLOBAL NAVIGATION SATELLITE SYSTEM.

REVISIONS

6/2/99

12/13/2019
12:20:01
K:\Proj\B-4605\Roadway\Proj\B4605_LS_RW03E-1.dgn
(Jeremy Lowery)

DocuSign Envelope ID: FAA59123-404F-4165-A825-7FECCB72CE25

STATE OF NORTH CAROLINA
DIVISION OF HIGHWAYS

TRANSPORTATION MANAGEMENT PLAN

PITT COUNTY
BRIDGE #730005

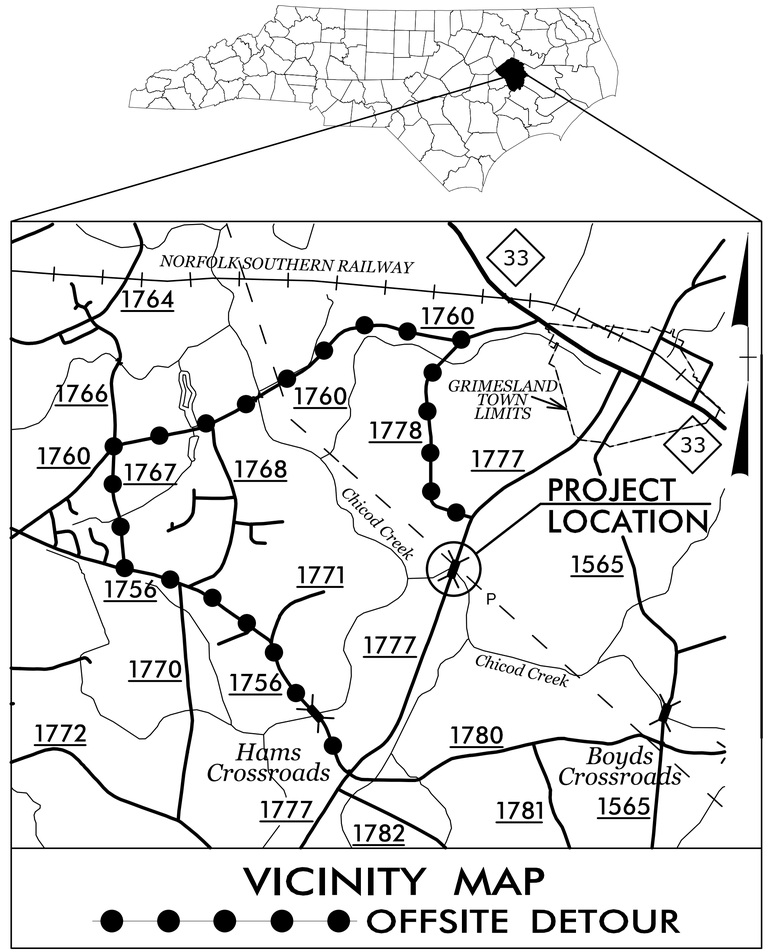

VICINITY MAP
● ● ● ● ● OFFSITE DETOUR

NCDOT CONTACT INFORMATION:
Phone: 919 707 6442 Fax: 919 250 4082
DAVID S. STUTTS, PE
SMU Project Engineer

WORK ZONE SAFETY & MOBILITY
"from the MOUNTAINS to the COAST"

PLAN PREPARED FOR N.C.D.O.T. BY:

TGS ENGINEERS
706 HILLSBOROUGH ST.
SUITE 200
RALEIGH, NC 27603
PH (919) 773-8887
CORP. LICENSE NO. : C-0275

TOMMY REGISTER, PE — *PROJECT ENGINEER*
PAUL SCHULKEN, EI — *DESIGN ENGINEER*

DIVISION OF HIGHWAYS
STATE OF NORTH CAROLINA
DEPARTMENT OF TRANSPORTATION
WORK ZONE TRAFFIC CONTROL

INDEX OF SHEETS

SHEET NO.	TITLE
TMP-1	TITLE SHEET, VICINITY MAP, INDEX OF SHEETS, LIST OF APPLICABLE ROADWAY STANDARD DRAWINGS, AND LEGEND
TMP-2	PHASING, GENERAL NOTES, AND DETOUR
TMP-3	GENERAL NOTES AND PHASING PLAN

ROADWAY STANDARD DRAWINGS

THE FOLLOWING ROADWAY STANDARDS AS SHOWN IN "ROADWAY STANDARD DRAWINGS" - PROJECT SERVICES UNIT - N.C. DEPARTMENT OF TRANSPORTATION - RALEIGH, N.C., DATED JANUARY 2018 ARE APPLICABLE TO THIS PROJECT AND BY REFERENCE HEREBY ARE CONSIDERED A PART OF THESE PLANS:

STD. NO.	TITLE
1101.01	WORK ZONE ADVANCE WARNING SIGNS
1101.03	TEMPORARY ROAD CLOSURES
1101.11	TRAFFIC CONTROL DESIGN TABLES
1110.01	STATIONARY WORK ZONE SIGNS
1110.02	PORTABLE WORK ZONE SIGNS
1145.01	BARRICADES
1165.01	WORK VEHICLE LIGHTING SYSTEMS AND TMA DELINEATION
1261.01	GUARDRAIL AND BARRIER DELINEATORS - INSTALLATION SPACING
1261.02	GUARDRAIL AND BARRIER DELINEATORS - TYPES AND MOUNTING
1262.01	GUARDRAIL END DELINEATION

LEGEND

GENERAL
- DIRECTION OF TRAFFIC FLOW
- DIRECTION OF PEDESTRIAN TRAFFIC FLOW
- EXIST. PVMT.
- NORTH ARROW
- PROPOSED PVMT.
- TEMP. SHORING (LOCATION PURPOSES ONLY)
- WORK AREA

PAVEMENT MARKINGS
- EXISTING LINES
- TEMPORARY LINES

TRAFFIC CONTROL DEVICES
- BARRICADE (TYPE III)

TEMPORARY SIGNING
- PORTABLE SIGN
- STATIONARY SIGN
- STATIONARY OR PORTABLE SIGN

DOCUMENT NOT CONSIDERED FINAL UNLESS ALL SIGNATURES COMPLETED

APPROVED: DocuSigned by: Clifton T Register, PE — 8DAF86CB942E4F8...
DATE: 11/24/2020 | 1:31 PM
SEAL

NORTH CAROLINA PROFESSIONAL SEAL 028392 ENGINEER CLIFTON T. REGISTER

SHEET NO.
TMP-1

PROJECT: B-4605

11/26/2019
X:\NCDOT\B-4605\Traffic\TrafficControl\TCP\b4605_TC_TMP_01(TSH).dgn
User:mlowery

DocuSign Envelope ID: FAA59123-404F-4165-A825-7FECCB72CE25

PROJ. REFERENCE NO.	SHEET NO.
B-4605	TMP-2

TGS ENGINEERS
706 HILLSBOROUGH ST.
SUITE 200
RALEIGH, NC 27603
PH (919) 773-8887
CORP. LICENSE NO. : C-0275

GENERAL NOTES

CHANGES MAY BE REQUIRED WHEN PHYSICAL DIMENSIONS IN THE DETAIL DRAWINGS, STANDARD DETAILS, AND ROADWAY DETAILS ARE NOT ATTAINABLE TO MEET FIELD CONDITIONS OR RESULT IN DUPLICATE OR UNDESIRED OVERLAPPING OF DEVICES. MODIFICATION MAY INCLUDE: MOVING, SUPPLEMENTING, COVERING, OR REMOVAL OF DEVICES AS DIRECTED BY THE ENGINEER.

THE FOLLOWING GENERAL NOTES APPLY AT ALL TIMES FOR THE DURATION OF THE CONSTRUCTION PROJECT EXCEPT WHEN OTHERWISE NOTED IN THE PLAN OR DIRECTED BY THE ENGINEER.

LANE AND SHOULDER CLOSURE REQUIREMENTS

A) REMOVE LANE CLOSURE DEVICES FROM THE LANE WHEN WORK IS NOT BEING PERFORMED BEHIND THE LANE CLOSURE OR WHEN A LANE CLOSURE IS NO LONGER NEEDED OR AS DIRECTED BY THE ENGINEER.

TRAFFIC PATTERN ALTERATIONS

B) NOTIFY THE ENGINEER TWENTY ONE (21) CALENDAR DAYS PRIOR TO ANY TRAFFIC PATTERN ALTERATION.

SIGNING

C) INSTALL ADVANCE WORK ZONE WARNING SIGNS WHEN WORK IS WITHIN 40 FT FROM THE EDGE OF TRAVEL LANE AND NO MORE THAN THREE (3) DAYS PRIOR TO THE BEGINNING OF CONSTRUCTION.

D) PROVIDE SIGNING AND DEVICES REQUIRED TO CLOSE THE ROAD ACCORDING TO THE ROADWAY STANDARD DRAWINGS AND TRAFFIC CONTROL PLANS.

PROVIDE SIGNING REQUIRED FOR THE OFF-SITE DETOUR ROUTE AS SHOWN IN THE TRAFFIC CONTROL PLANS.

E) COVER OR REMOVE ALL SIGNS AND DEVICES REQUIRED TO CLOSE THE ROAD WHEN ROAD CLOSURE IS NOT IN OPERATION.

COVER OR REMOVE ALL SIGNS REQUIRED FOR THE OFF-SITE DETOUR WHEN THE DETOUR IS NOT IN OPERATION.

F) ENSURE ALL NECESSARY SIGNING IS IN PLACE PRIOR TO ALTERING ANY TRAFFIC PATTERN.

TRAFFIC CONTROL DEVICES

G) PLACE TYPE III BARRICADES, WITH "ROAD CLOSED" SIGN R11-2 ATTACHED, OF SUFFICIENT LENGTH TO CLOSE ENTIRE ROADWAY.

PAVEMENT MARKINGS AND MARKERS

H) INSTALL PAVEMENT MARKINGS ON THE FINAL SURFACE AS FOLLOWS:

ROAD NAME	MARKING	MARKERS
SR 1777 (BLACKJACK GRIMESLAND RD)	PAINT	RAISED

I) TIE PROPOSED PAVEMENT MARKING LINES TO EXISTING PAVEMENT MARKING LINES.

J) REMOVE ANY CONFLICTING MARKINGS OR MARKERS BEFORE SHIFTING TRAFFIC TO A NEW PATTERN.

K) PASSING ZONE WILL BE DETERMINED IN THE FIELD AND MUST BE APPROVED BY THE ENGINEER.

L) STATE FORCES WILL INSTALL AND MAINTAIN THE PROJECT DETOUR AND TYPE III BARRICADES AT THE PROJECT LIMITS. STATE FORCES WILL INSTALL MARKINGS AND MARKERS ON THE FINISHED PROJECT. CONTACT JEFF DUNNING AT 252-439-2950 TWO WEEKS PRIOR TO CLOSING THE ROAD FOR DETOUR INSTALLATION.

PHASING

STEP 1: INSTALL ALL DETOUR ROUTE SIGNS USING RSD 1101.01 AND AS SHOWN.

STEP 2: INSTALL TYPE III BARRICADES AND SIGNS, AND CLOSE SR 1777 (BLACKJACK GRIMESLAND RD) TO TRAFFIC USING RSD 1101.03 (SHEET 1 OF 9) AND AS SHOWN.

PLACE TRAFFIC ON DETOUR.

STEP 3: DEMOLISH AND REMOVE THE EXISTING BRIDGE OVER CHICOD CREEK.

CONSTRUCT THE NEW BRIDGE OVER CHICOD CREEK FROM -L- STA. 13+40.25 TO 14+82.75.

CONSTRUCT THE ROADWAY ON SR 1777 (BLACKJACK GRIMESLAND RD) FROM -L- STA. 11+50.00 TO -L- STA. 13+40.25 (BEGIN BRIDGE) AND FROM -L- STA. 14+82.75 (END BRIDGE) TO 17+00.00 UP TO AND INCLUDING THE FINAL LAYER OF SURFACE COURSE.

STEP 4: UPON COMPLETION OF BRIDGE, APPROACHES, AND ROADWAY, PLACE FINAL PAVEMENT MARKINGS AND MARKERS IN ACCORDANCE WITH RSD 1205.01, 1205.02, 1205.12, 1250.01, AND 1251.01. REMOVE BARRICADES, SIGNS, AND ALL OTHER TRAFFIC CONTROL DEVICES AND OPEN SR 1777 (BLACKJACK GRIMESLAND RD) TO TRAFFIC IN FINAL PATTERN.

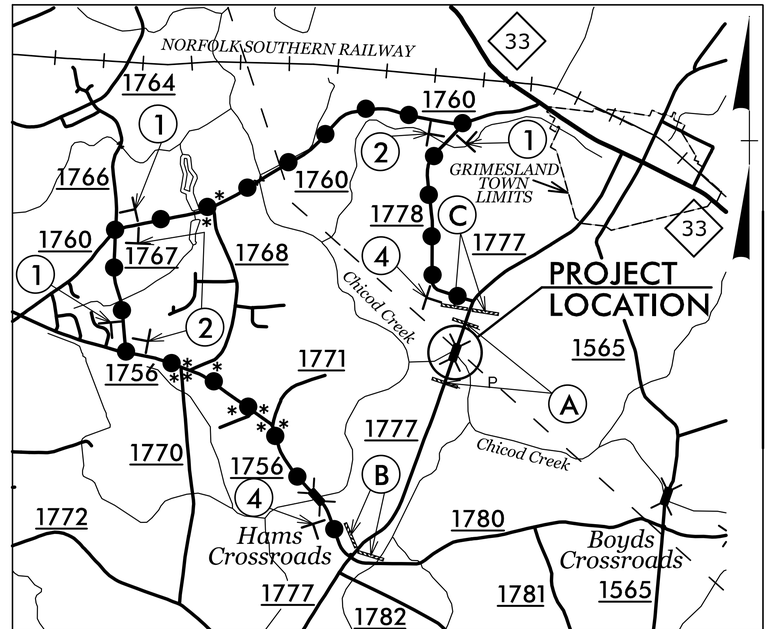

VICINITY MAP
OFFSITE DETOUR

TYPE III BARRICADE

(A)

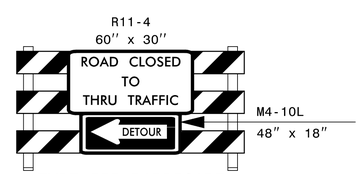

TYPE III BARRICADE

(B)

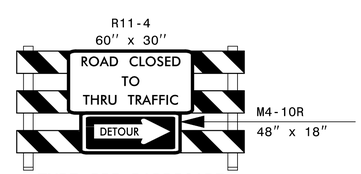

TYPE III BARRICADE

(C)

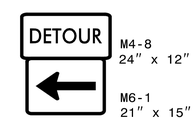

(1)

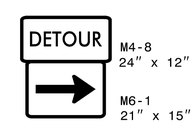

(2)

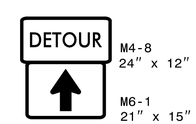

(3)

* PLACE SIGN (3) ON RT SHOULDER FACING TRAFFIC

ESTIMATED ADDITIONAL SIGNS REQUIRED PER RSD 1101.03.

SEE RSD FOR SIGN PLACEMENT AND SIGN WORDING REQUIREMENTS.
- W20-3 (19 EACH)
- SP-4 (3 EACH)

(4)

APPROVED: Clifton T Register, PE
DocuSigned by:
8DAF86C8942E4F8...
DATE: 11/24/2020 | 1:31 PM EST

SEAL

NORTH CAROLINA PROFESSIONAL SEAL 028392 ENGINEER CLIFTON T. REGISTER

DOCUMENT NOT CONSIDERED FINAL UNLESS ALL SIGNATURES COMPLETED

DIVISION OF HIGHWAYS
STATE OF NORTH CAROLINA
DEPARTMENT OF TRANSPORTATION
WORK ZONE TRAFFIC CONTROL

GENERAL NOTES, PHASING, AND DETOUR

12/10/2019
X:\NCDOT\B-4605\Traffic\TrafficControl\TCP\b4605_TC_TMP_02.dgn
User:mlowery

DocuSign Envelope ID: FAA59123-404F-4165-A825-7FECCB72CE25

PROJ. REFERENCE NO.	SHEET NO.
B-4605	TMP-3

TGS ENGINEERS
706 HILLSBOROUGH ST.
SUITE 200
RALEIGH, NC 27603
PH (919) 773-8887
CORP. LICENSE NO. : C-0275

15

NAD 83/2011

GENERAL NOTES

IMPLEMENT TRAFFIC CONTROL IN ACCORDANCE WITH THE ROADWAY STANDARD DRAWINGS LISTED ON TMP-1.

CHANGES MAY BE REQUIRED WHEN PHYSICAL DIMENSIONS IN THE DETAIL DRAWINGS, STANDARD DETAILS, AND ROADWAY DETAILS ARE NOT ATTAINABLE TO MEET FIELD CONDITIONS OR RESULT IN DUPLICATE OR UNDESIRED OVERLAPPING OF DEVICES. MODIFICATION MAY INCLUDE: MOVING, SUPPLEMENTING, COVERING, OR REMOVAL OF DEVICES AS DIRECTED BY THE ENGINEER.

STATE FORCES WILL INSTALL AND MAINTAIN THE PROJECT DETOUR AND THE TYPE III BARRICADES AT THE PROJECT LIMITS. STATE FORCES WILL INSTALL PAINT AND MARKERS ON THE FINISHED PROJECT. CONTACT JEFF DUNNING AT 252-439-2950 TWO WEEKS PRIOR TO CLOSING THE ROAD FOR THE DETOUR INSTALLATION.

BEGIN TIP PROJECT B-4605
-L- POT Sta. 11+50.00

END TIP PROJECT B-4605
-L- POT Sta. 17+00.00

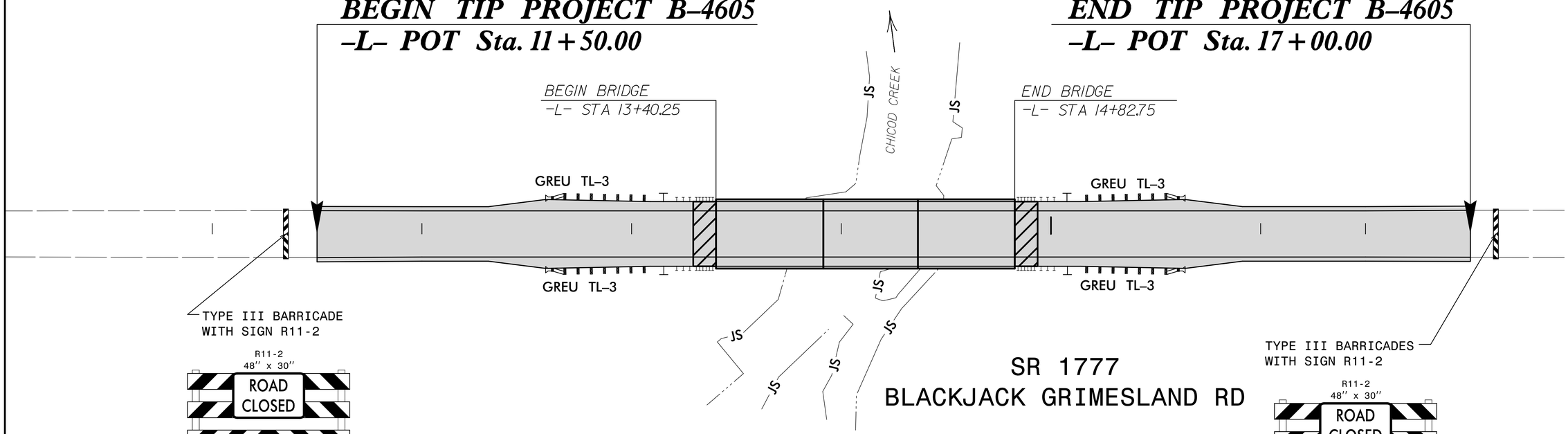

TYPE III BARRICADE

TYPE III BARRICADE

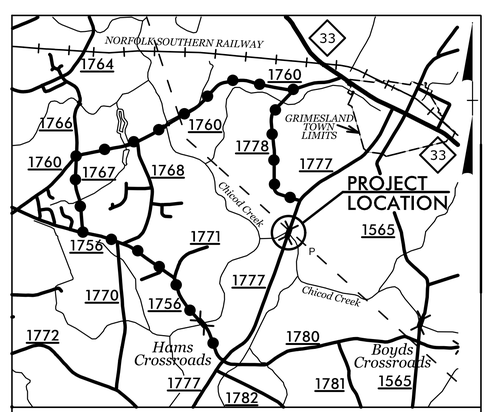

VICINITY MAP
● ● ● ● ● OFFSITE DETOUR

APPROVED: DocuSigned by: Clifton T Register, PE
8DAF86CB942E4F8...
DATE: 11/24/2020 | 1:31 PM EST

SEAL

NORTH CAROLINA PROFESSIONAL SEAL 028392 ENGINEER CLIFTON T. REGISTER

DIVISION OF HIGHWAYS
STATE OF NORTH CAROLINA
DEPARTMENT OF TRANSPORTATION
WORK ZONE TRAFFIC CONTROL

GENERAL NOTES
AND PHASING PLAN

DOCUMENT NOT CONSIDERED FINAL
UNLESS ALL SIGNATURES COMPLETED

12/10/2019
X:\NCDOT\B-4605\Traffic\TrafficControl\TCP\b4605_TC_TMP_03.dgn
User:ntilowery

TIP PROJECT: B-4605

STATE	STATE PROJECT REFERENCE NO.	SHEET NO.	TOTAL SHEETS
N.C.	B-4605	EC-1	

STATE PROJ. NO.	F. A. PROJ. NO.	DESCRIPTION

STATE OF NORTH CAROLINA
DIVISION OF HIGHWAYS

PLAN FOR PROPOSED
HIGHWAY EROSION CONTROL

PITT COUNTY

LOCATION: REPLACE BRIDGE 5 OVER CHICOD CREEK ON SR 1777

TYPE OF WORK: GRADING, DRAINAGE, PAVING, AND STRUCTURE

See Sheet 1A For Index of Sheets
See Sheet 1B For Conventional Plan Sheet Symbols
See Sheet 1C-1 For Survey Control Sheet

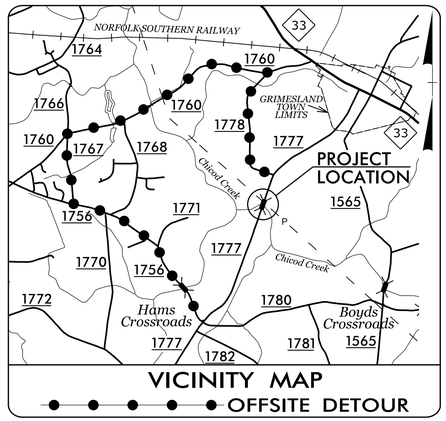

VICINITY MAP
OFFSITE DETOUR

NAD 83/ NA 2011

4

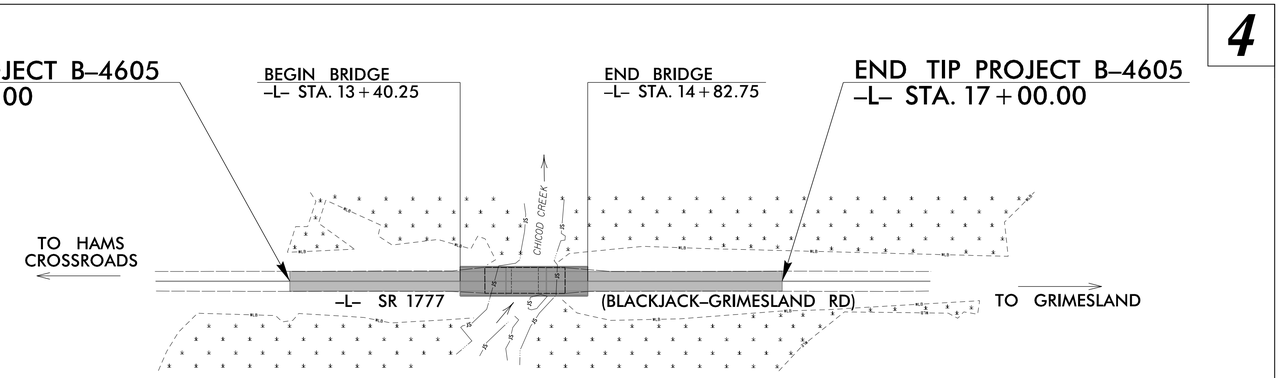

CLEARING ON THIS PROJECT SHALL BE PERFORMED TO THE LIMITS ESTABLISHED BY METHOD II.
THIS PROJECT IS NOT WITHIN ANY MUNICIPAL BOUNDARIES.

EROSION AND SEDIMENT CONTROL MEASURES

Std. #	Description	Symbol
1630.03	Temporary Silt Ditch	TSD
1630.05	Temporary Diversion	TD
1605.01	Temporary Silt Fence	
1606.01	Special Sediment Control Fence	
1622.01	Temporary Berms and Slope Drains	
1630.02	Silt Basin Type B	
1633.01	Temporary Rock Silt Check Type-A	
	Temporary Rock Silt Check Type-A with Matting and Polyacrylamide (PAM)	
1633.02	Temporary Rock Silt Check Type-B	
	Wattle / Coir Fiber Wattle	EW CFW
	Wattle / Coir Fiber Wattle with Polyacrylamide (PAM)	
1634.01	Temporary Rock Sediment Dam Type-A	
1634.02	Temporary Rock Sediment Dam Type-B	
1635.01	Rock Pipe Inlet Sediment Trap Type-A	
1635.02	Rock Pipe Inlet Sediment Trap Type-B	
1630.04	Stilling Basin	
1630.06	Special Stilling Basin	
	Rock Inlet Sediment Trap:	
1632.01	Type A	A
1632.02	Type B	B
1632.03	Type C	C
	Skimmer Basin	
	Tiered Skimmer Basin	
	Infiltration Basin	

THIS PROJECT CONTAINS EROSION CONTROL PLANS FOR CLEARING AND GRUBBING PHASE OF CONSTRUCTION.

ENVIRONMENTALLY SENSITIVE AREA(S) EXIST ON THIS PROJECT

Refer To E. C. Special Provisions for Special Considerations.

THIS PROJECT HAS BEEN DESIGNED TO SENSITIVE WATERSHED STANDARDS.

GRAPHIC SCALE

0 50

PLANS

THESE EROSION AND SEDIMENT CONTROL PLANS COMPLY WITH THE REGULATIONS SET FORTH BY THE NCG-010000 GENERAL CONSTRUCTION PERMIT EFFECTIVE APRIL 1, 2019 AND ISSUED BY THE NORTH CAROLINA DEPARTMENT OF ENVIRONMENTAL QUALITY / DIVISION OF ENERGY, MINERAL, AND LAND RESOURCES.

Prepared in the Office of:

TGS ENGINEERS
706 HILLSBOROUGH ST
SUITE 200
RALEIGH, NC 27603

PH (919) 773-8887
CORP. LICENSE NO.: C-0275

Designed by:

BRIANA CAMP, EI — NAME
4041 — LEVEL III CERTIFICATION NO.

Reviewed in the Office of:

ROADSIDE ENVIRONMENTAL UNIT
1 South Wilmington St.
Raleigh, NC 27611

2018 STANDARD SPECIFICATIONS

Reviewed by:

JUSTIN DAVIS

Roadway Standard Drawings

The following roadway english standards as appear in "Roadway Standard Drawings"– Roadway Design Unit – N. C. Department of Transportation – Raleigh, N. C., dated January 2018 and the latest revison thereto are applicable to this project and by reference hereby are considered a part of these plans.

1604.01	Railroad Erosion Control Detail	1632.01	Rock Inlet Sediment Trap Type A
1605.01	Temporary Silt Fence	1632.02	Rock Inlet Sediment Trap Type B
1606.01	Special Sediment Control Fence	1632.03	Rock Inlet Sediment Trap Type C
1607.01	Gravel Construction Entrance	1633.01	Temporary Rock Silt Check Type A
1622.01	Temporary Berms and Slope Drains	1633.02	Temporary Rock Silt Check Type B
1630.01	Riser Basin	1634.01	Temporary Rock Sediment Dam Type A
1630.02	Silt Basin Type B	1634.02	Temporary Rock Sediment Dam Type B
1630.03	Temporary Silt Ditch	1635.01	Rock Pipe Inlet Sediment Trap Type A
1630.04	Stilling Basin	1635.02	Rock Pipe Inlet Sediment Trap Type B
1630.05	Temporary Diversion	1640.01	Coir Fiber Baffle
1630.06	Special Stilling Basin	1645.01	Temporary Stream Crossing
1631.01	Matting Installation		

\\NCDOT\B-4605\Environmental\Design\B4605_EC_tsh.dgn
1/16/2020
jsepcherego

PROJECT REFERENCE NO.	SHEET NO.
B-4605	EC-2A
R/W SHEET NO.	
ROADWAY DESIGN ENGINEER	HYDRAULICS ENGINEER

COIR FIBER WATTLE BARRIER DETAIL

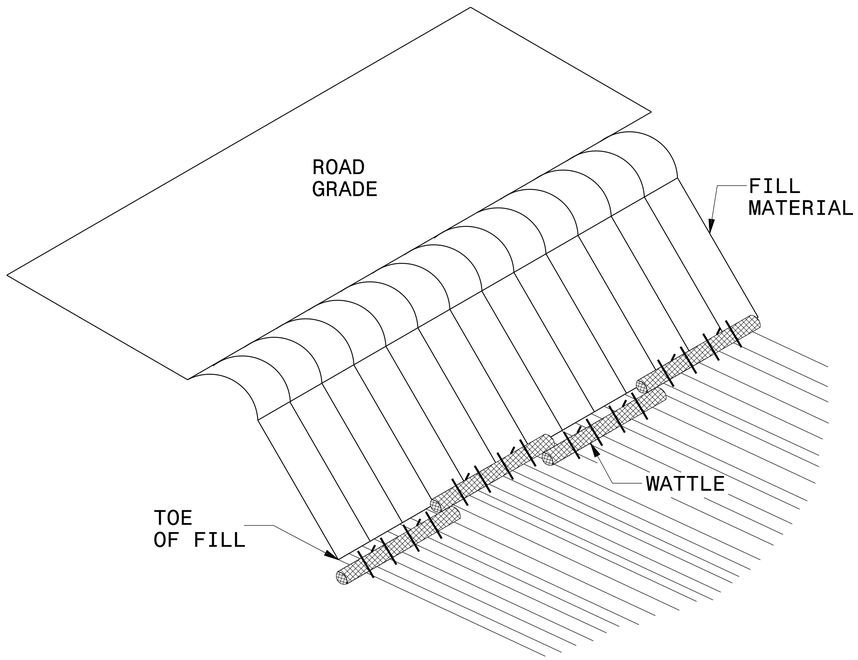

ISOMETRIC VIEW

NOTES:

USE MINIMUM 18 IN. NOMINAL DIAMETER COIR FIBER (COCONUT) WATTLE AND LENGTH OF 10 FT.

EXCAVATE A 2 TO 3 INCH TRENCH FOR WATTLE TO BE PLACED.

DO NOT PLACE WATTLES ON TOE OF SLOPE.

USE 2 FT. WOODEN STAKES WITH A 2 IN. BY 2 IN. NOMINAL CROSS SECTION.

INSTALL A MINIMUM OF 2 UPSLOPE STAKES AND 4 DOWNSLOPE STAKES AT AN ANGLE TO WEDGE WATTLE TO GROUND.

PROVIDE STAPLES MADE OF 0.125 IN. DIAMETER STEEL WIRE FORMED INTO A U SHAPE NOT LESS THAN 12″ IN LENGTH.

INSTALL STAPLES APPROXIMATELY EVERY 1 LINEAR FOOT ON BOTH SIDES OF WATTLE AND AT EACH END TO SECURE IT TO THE SOIL.

FOR BREAKS ALONG LARGE SLOPES, USE MAXIMUM SPACING OF 25 FT.

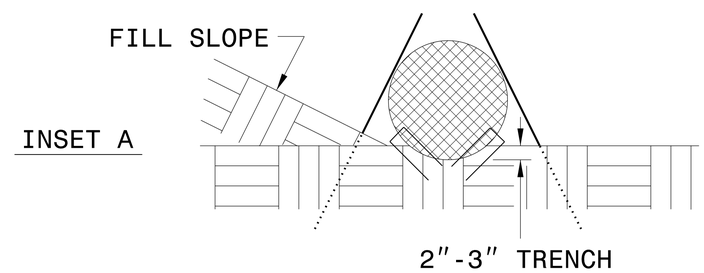

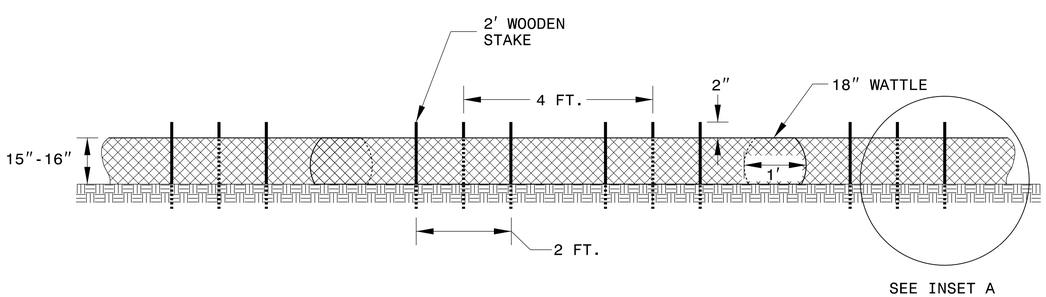

FRONT VIEW

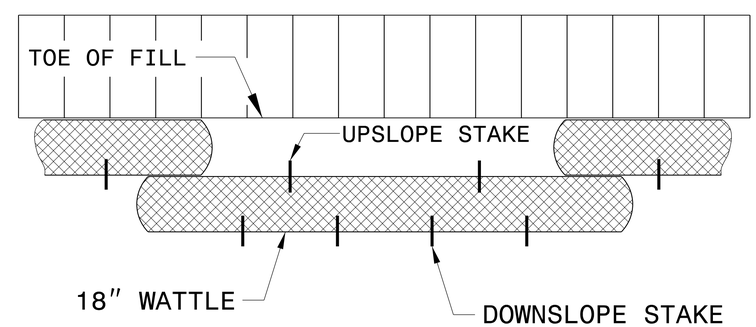

TOP VIEW

PROJECT REFERENCE NO.	SHEET NO.
B-4605	EC-2B
R/W SHEET NO.	
ROADWAY DESIGN ENGINEER	HYDRAULICS ENGINEER

SILT FENCE COIR FIBER WATTLE BREAK DETAIL

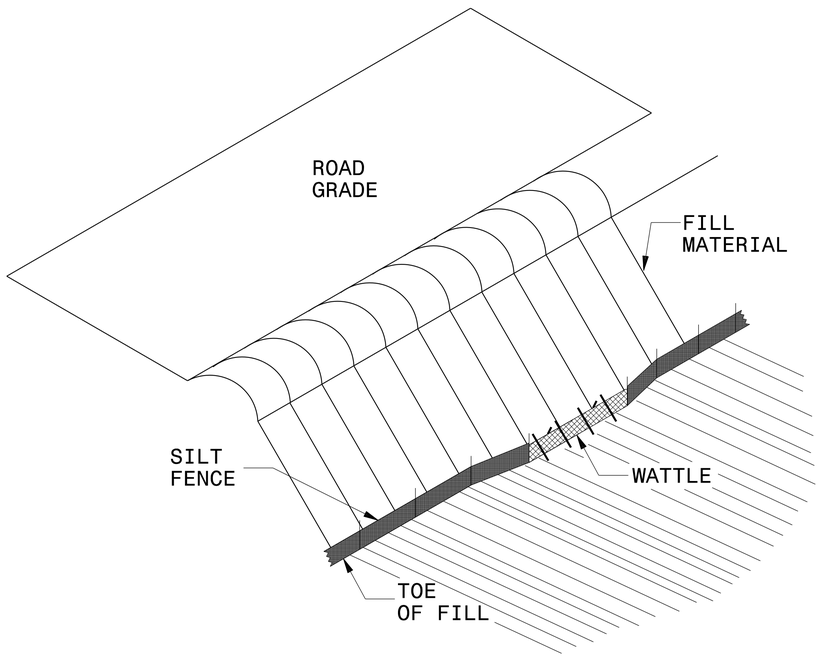

ISOMETRIC VIEW

NOTES:

USE MINIMUM 12 IN. DIAMETER COIR FIBER (COCONUT FIBER) WATTLE AND LENGTH OF 10 FT.

EXCAVATE A 1 TO 2 INCH TRENCH FOR WATTLE TO BE PLACED.

DO NOT PLACE WATTLE ON TOE OF SLOPE.

USE 2 FT. WOODEN STAKES WITH A 2 IN. BY 2 IN. NOMINAL CROSS SECTION.

INSTALL A MINIMUM OF 2 UPSLOPE STAKES AND 4 DOWNSLOPE STAKES AT AN ANGLE TO WEDGE WATTLE TO GROUND.

PROVIDE STAPLES MADE OF 0.125 IN. DIAMETER STEEL WIRE FORMED INTO A U SHAPE NOT LESS THAN 12″ IN LENGTH.

INSTALL STAPLES APPROXIMATELY EVERY 1 LINEAR FOOT ON BOTH SIDES OF WATTLE AND AT EACH END TO SECURE IT TO THE SOIL.

WATTLE INSTALLATION CAN BE ON OUTSIDE OF THE SILT FENCE AS DIRECTED.

INSTALL TEMPORARY SILT FENCE IN ACCORDANCE WITH SECTION 1605 OF THE STANDARD SPECIFICATIONS.

INSET A

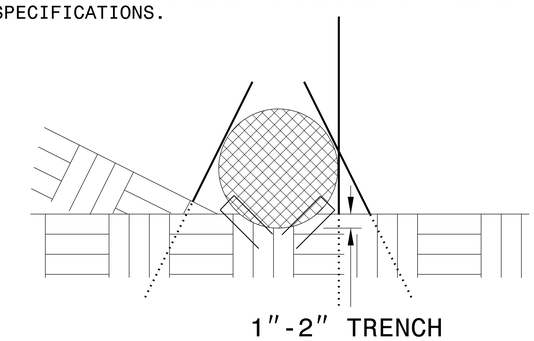

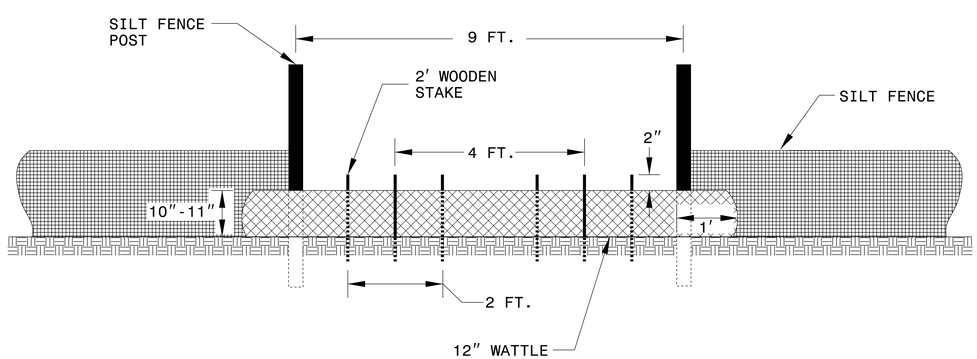

VIEW FROM SLOPE

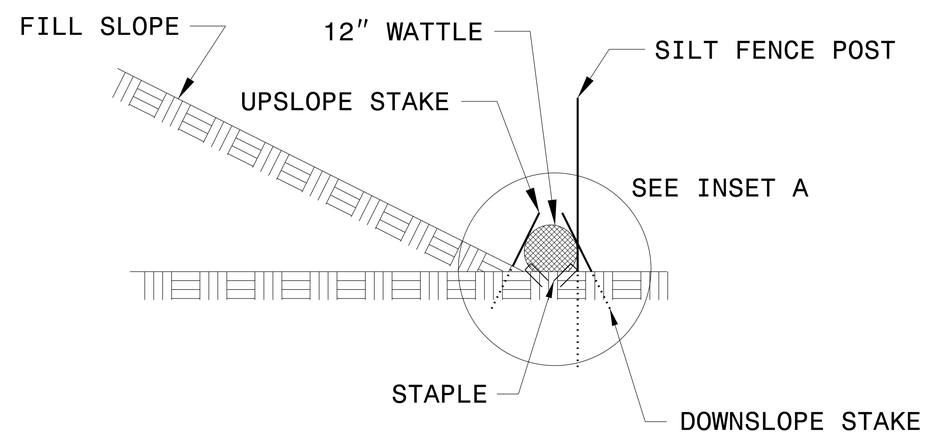

SIDE VIEW

PROJECT REFERENCE NO.	SHEET NO.
B-4605	EC-3
ROADWAY DESIGN ENGINEER	HYDRAULICS ENGINEER

DIVISION OF HIGHWAYS
STATE OF NORTH CAROLINA

SOIL STABILIZATION TIMEFRAMES

SITE DESCRIPTION	STABILIZATION TIME	TIMEFRAME EXCEPTIONS
PERIMETER DIKES, SWALES, DITCHES AND SLOPES	7 DAYS	NONE
HIGH QUALITY WATER (HQW) ZONES	7 DAYS	NONE
SLOPES STEEPER THAN 3:1	7 DAYS	IF SLOPES ARE 10' OR LESS IN LENGTH AND ARE NOT STEEPER THAN 2:1, 14 DAYS ARE ALLOWED.
SLOPES 3:1 OR FLATTER	14 DAYS	7 DAYS FOR SLOPES GREATER THAN 50' IN LENGTH.
ALL OTHER AREAS WITH SLOPES FLATTER THAN 4:1	14 DAYS	NONE, EXCEPT FOR PERIMETERS AND HQW ZONES.

SOIL STABILIZATION SUMMARY SHEET

MATTING FOR EROSION CONTROL

CONST SHEET NO.	LINE	FROM STATION	TO STATION	SIDE	ESTIMATE (SY)
				SUBTOTAL	0
MISCELLANEOUS MATTING TO BE INSTALLED AS DIRECTED BY THE ENGINEER					1375
				TOTAL	1375
				SAY	1500

PROJECT REFERENCE NO.	SHEET NO.
B-4605	EC-4
R/W SHEET NO.	4
ROADWAY DESIGN ENGINEER	HYDRAULICS ENGINEER

TGS ENGINEERS
706 HILLSBOROUGH ST. SUITE 200
RALEIGH, NC 27603
PH (919) 773-8887
CORP. LICENSE NO.: C-0275

CLEARING AND GRUBBING
EROSION CONTROL FOR
CONSTRUCTION SHEET 4

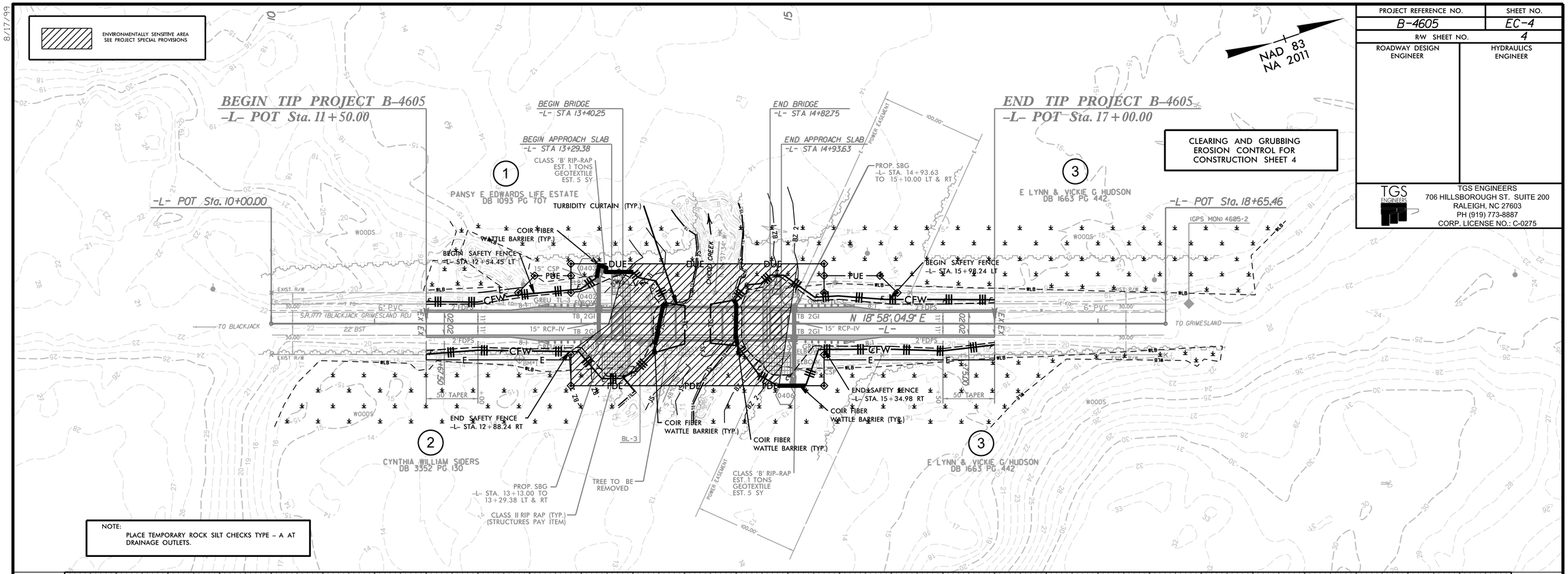

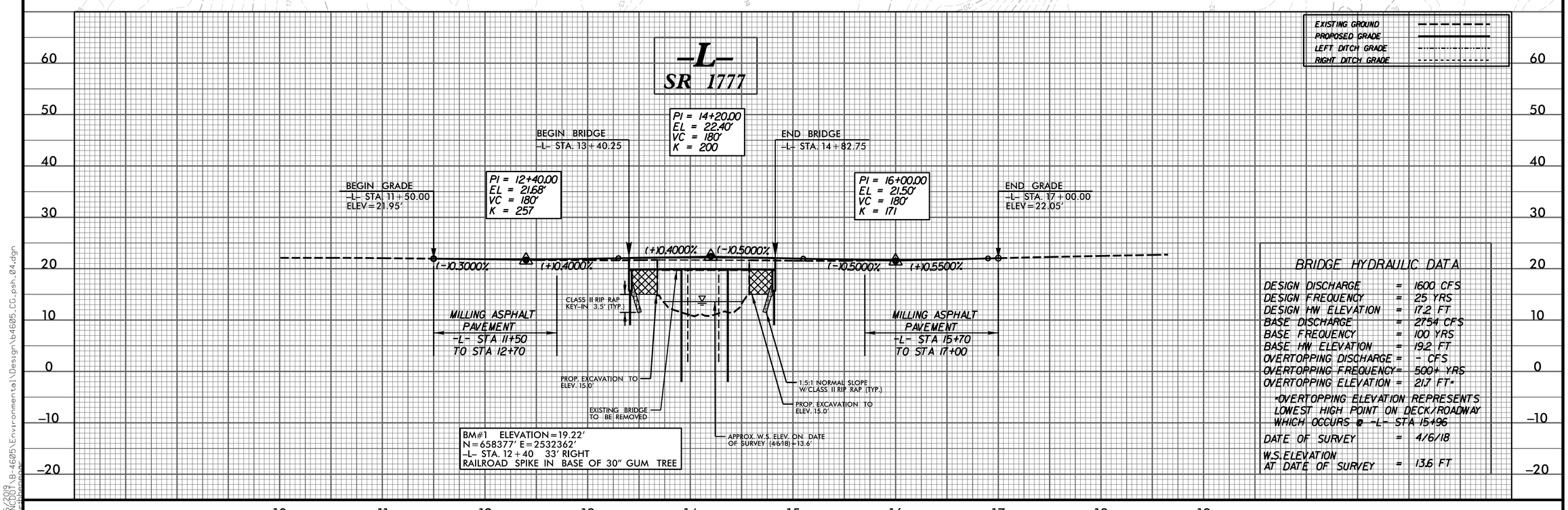

8/17/99

5/15/2019
X:\WCDOT\B-4605\Environmental\Design\b4605_CG_psh_04.dgn

PROJECT REFERENCE NO.	SHEET NO.
B-4605	EC-5
R/W SHEET NO.	4
ROADWAY DESIGN ENGINEER	HYDRAULICS ENGINEER

TGS ENGINEERS
706 HILLSBOROUGH ST. SUITE 200
RALEIGH, NC 27603
PH (919) 773-8887
CORP. LICENSE NO.: C-0275

NAD 83
NA 2011

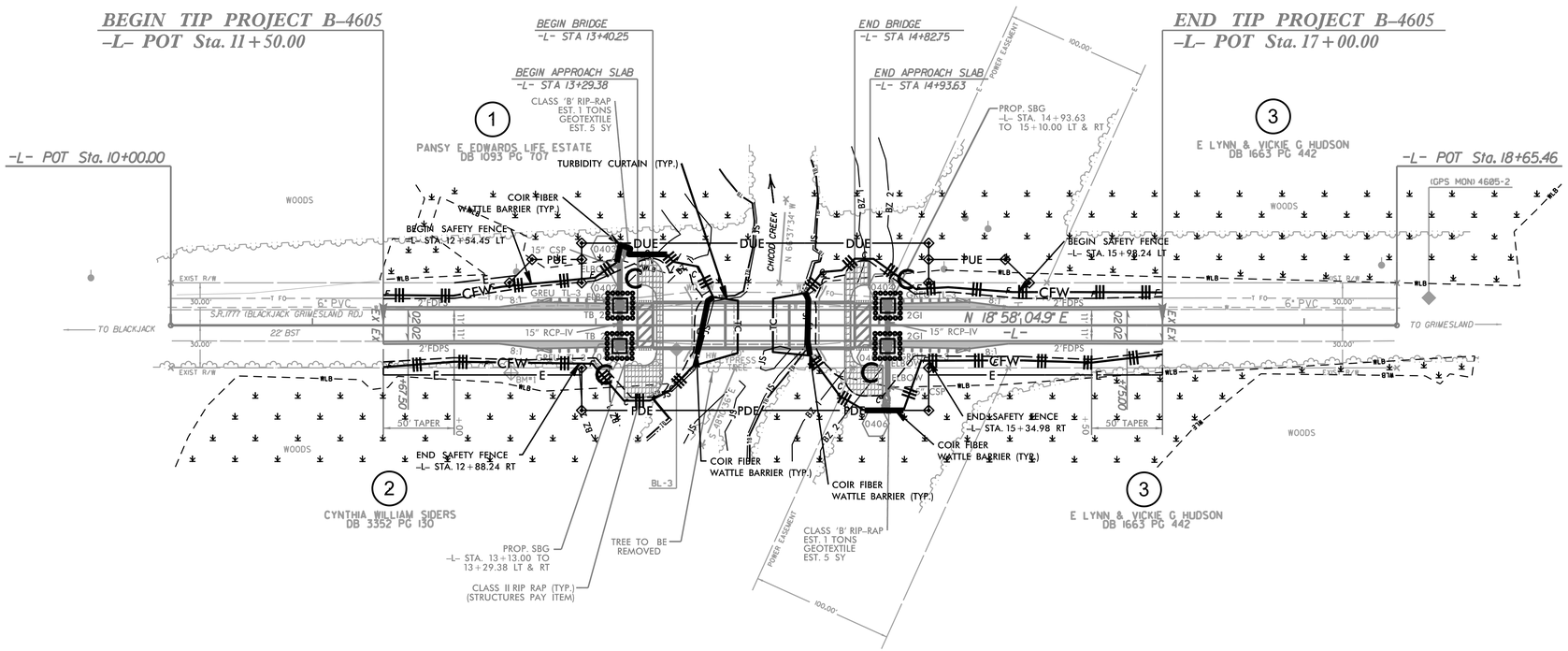

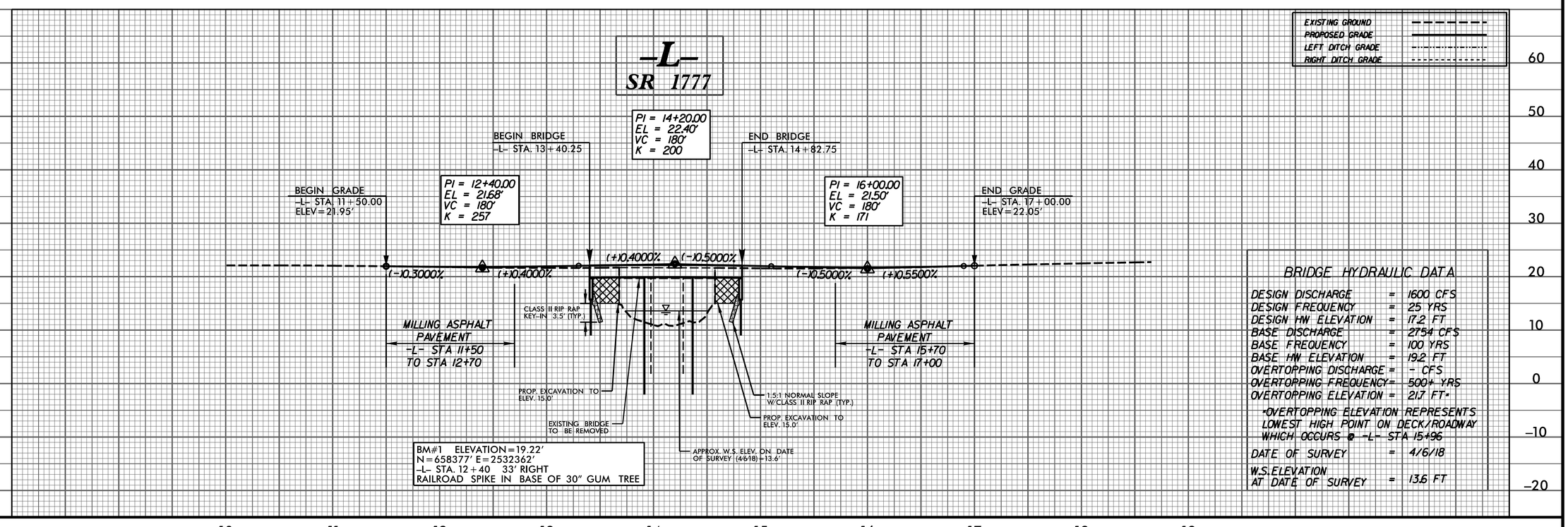

BRIDGE HYDRAULIC DATA

DESIGN DISCHARGE	=	1600 CFS
DESIGN FREQUENCY	=	25 YRS
DESIGN HW ELEVATION	=	17.2 FT
BASE DISCHARGE	=	2754 CFS
BASE FREQUENCY	=	100 YRS
BASE HW ELEVATION	=	19.2 FT
OVERTOPPING DISCHARGE	=	- CFS
OVERTOPPING FREQUENCY	=	500+ YRS
OVERTOPPING ELEVATION	=	21.7 FT*

*OVERTOPPING ELEVATION REPRESENTS LOWEST HIGH POINT ON DECK/ROADWAY WHICH OCCURS @ -L- STA 15+96

DATE OF SURVEY	=	4/6/18
W.S. ELEVATION AT DATE OF SURVEY	=	13.6 FT

8/17/99

5/16/2019
R:\NCDOT\B-4605\Environmental\Design\b4605_EC_psh_04.dgn
jlesenbenger

T.I.P. NO.	SHEET NO.
B–4605	UO–1

NOTE:
ALL UTILITY WORK SHOWN ON THIS SHEET IS DONE BY OTHERS.
NO PAYMENT WILL BE MADE TO THE CONTRACTOR FOR UTILITY WORK SHOWN ON THIS SHEET.

STATE OF NORTH CAROLINA
DIVISION OF HIGHWAYS

UTILITIES BY OTHERS PLANS
PITT COUNTY

LOCATION: REPLACE BRIDGE 5 OVER CHICOD CREEK ON SR 1777

TYPE OF WORK: WATER & TELECOM

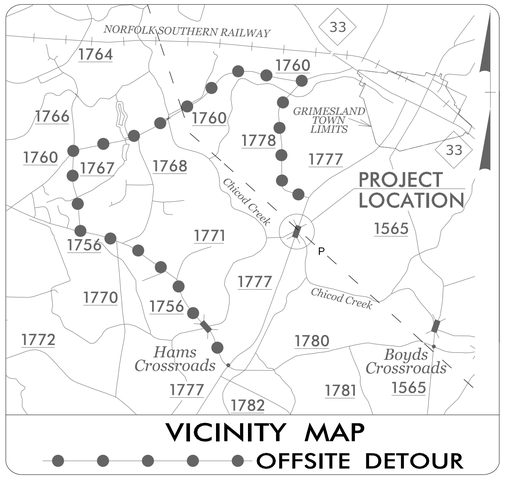

NAD 83/ NA 2011

4

UO–2

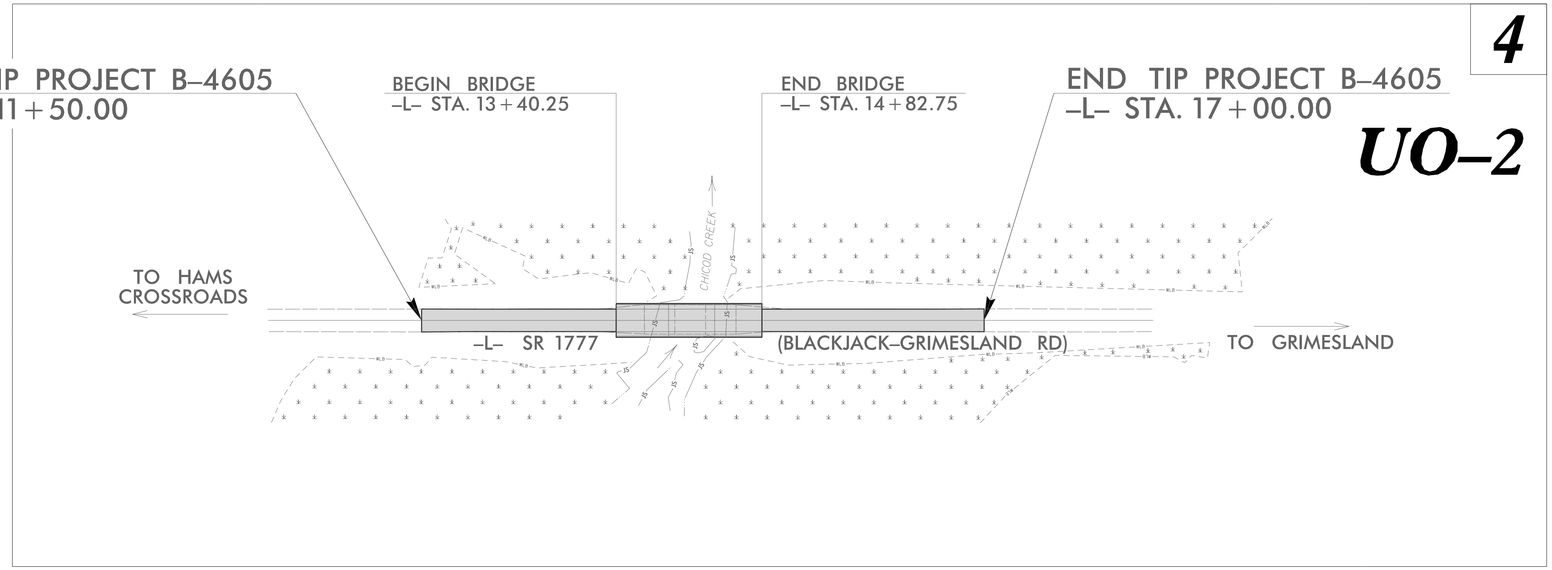

TIP PROJECT: B–4605

13-DEC-2019 10:11
S:\Server Files\PROJECTS\2016\A2016703.00_TGS_Div-2 LIB Replacement\A2016703.03_TGS_Div-2 LIB B-4605\Design\Utilities\Engineering\UB0\Proj\b4605_ut_tsh_U001_psh.dgn
$$$$USERNAME$$$$

GRAPHIC SCALES

50 25 0 50 100
PLANS

50 25 0 50 100
PROFILE (HORIZONTAL)

10 5 0 10 20
PROFILE (VERTICAL)

INDEX OF SHEETS

SHEET NO.	DESCRIPTION
UO–1	TITLE SHEET
UO–2	UBO PLAN SHEET

UTILITY OWNERS WITH CONFLICTS

(A) WATER – EASTERN PINES WATER CORPORATION
(B) TELECOM – CENTURYLINK

PREPARED IN THE OFFICE OF:

HINDE ENGINEERING
License No, C-2639
401 Harrison Oaks Blvd., Suite 145 Cary, NC 27513
(919)-653-0001

Michael E. Davis	UTILITY COORDINATION PROJECT MANAGER
Harris S. Winters	PROJECT UTILITY COORDINATOR
James N. Arnold	PROJECT UTILITY DESIGNER

DIVISION OF HIGHWAYS
UTILITIES UNIT
1555 MAIL SERVICES CENTER
RALEIGH NC 27699–1555
PHONE (919) 707–6690
FAX (919) 250–4151

Heather Lane, P.E.	DIVISION CONTACT #1
David Kramer	DIVISION CONTACT #2
	DIVISION CONTACT #3
	DIVISION CONTACT #4

PROJECT REFERENCE NO.	SHEET NO.
B-4605	U0-2
THIS SHEET CORRESPONDS TO RDY-4	

UTILITIES BY OTHERS

NOTE:
ALL UTILITY WORK SHOWN ON THIS SHEET WILL BE DONE BY OTHERS. NO PAYMENT WILL BE MADE TO THE CONTRACTOR FOR UTILITY WORK SHOWN ON THIS SHEET.

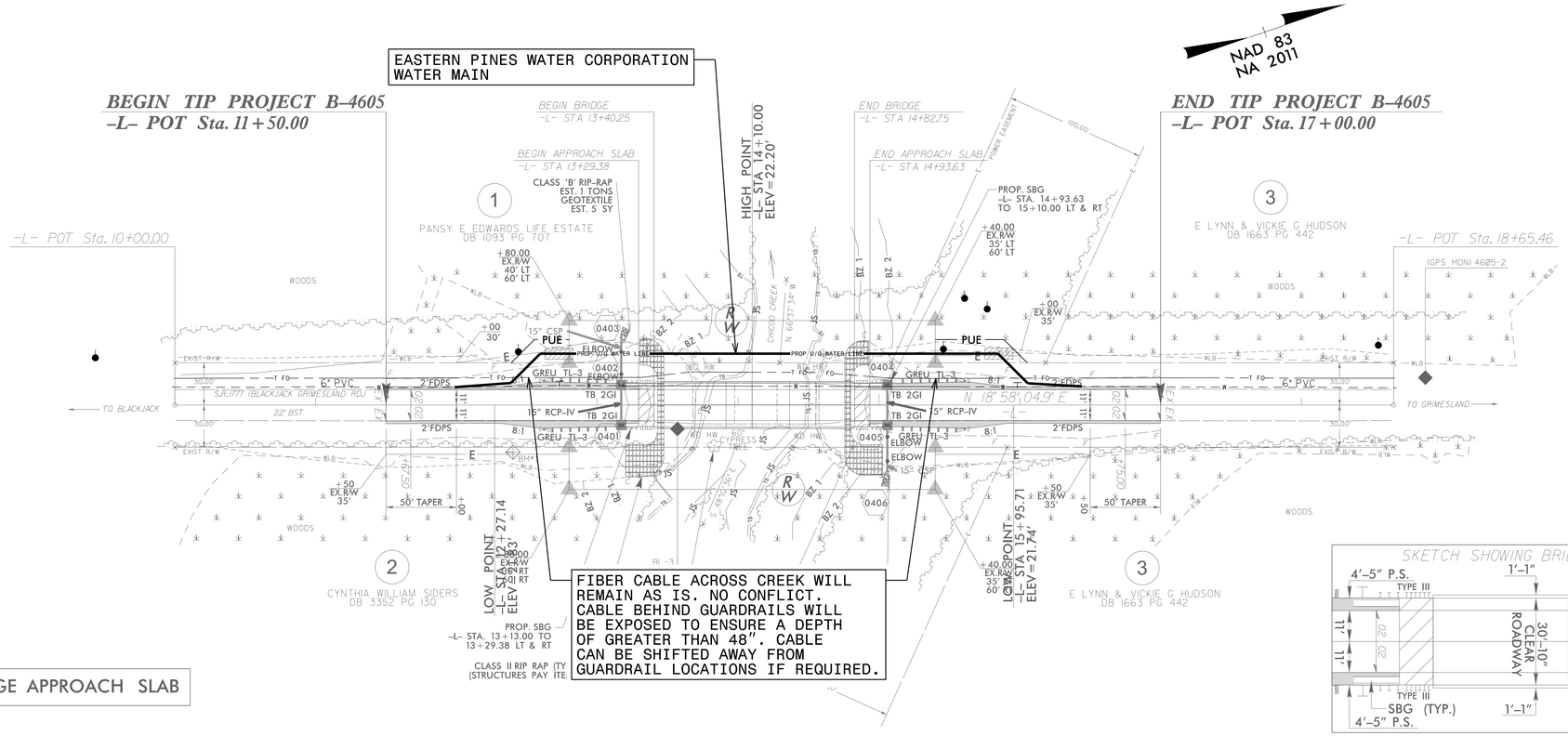

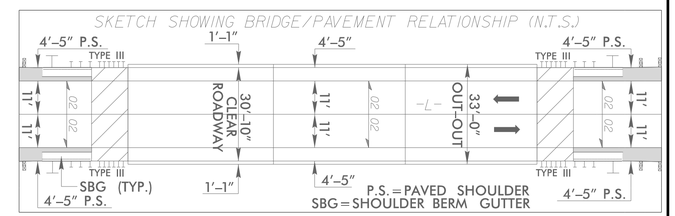

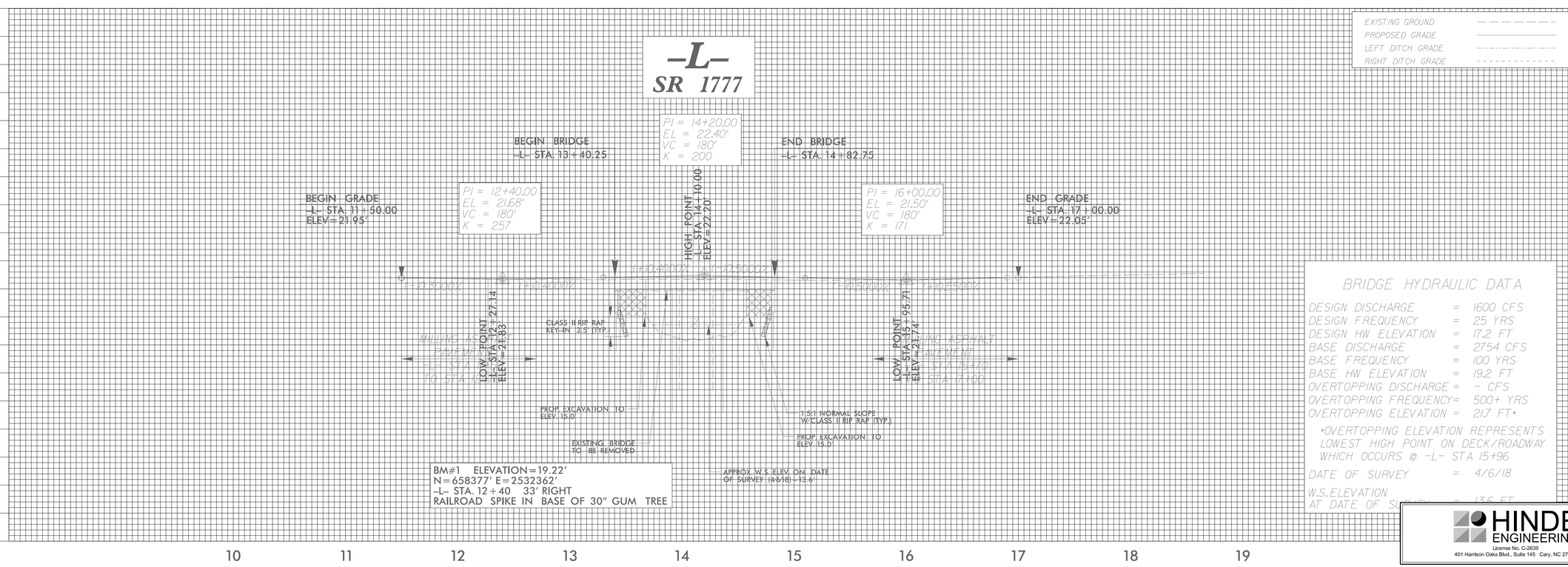

HINDE ENGINEERING
License No. C-2639
401 Harrison Oaks Blvd., Suite 145 Cary, NC 27513

13-DEC-2019 10:11
S:\Structure Design\PROJECTS\2016\A2016703.00_TGS_Div-2 LIB Replacement\A2016703.03_TGS_Div-2 LIB B-4605\Design\Utilities\Engineering\UB0\Proj\b4605_ut_rdy4_U002_psh.dgn
$$$$USERNAME$$$$

PROJ. REFERENCE NO.	SHEET NO.
B-4605	X-1A

STATE OF NORTH CAROLINA
DIVISION OF HIGHWAYS

NOTE: EMBANKMENT COLUMN DOES NOT INCLUDE BACKFILL FOR UNDERCUT

CROSS-SECTION SUMMARY

Station L	Uncl. Exc. (cu. yd.)	Embt (cu. yd.)
11+50.00	0	0
12+00.00	4	10
12+50.00	3	20
13+00.00	10	32
13+40.25	14	26

Station L	Uncl. Exc. (cu. yd.)	Embt (cu. yd.)
14+82.75	0	0
15+00.00	5	2
15+50.00	8	10
16+00.00	3	10
16+50.00	4	8
17+00.00	4	7

Approximate quantities only. Unclassified excavation, borrow excavation, fine grading, clearing and grubbing, and removal of existing pavement will be paid for at the lump sum price for "Grading".

0 5 10	PROJ. REFERENCE NO.	SHEET NO.
	B-4605	X-1

Approximate quantities only. Clearing and Grubbing, Unclassified Excavation, Borrow Excavation, Fine Grading, and Removal of Existing Asphalt Pavement will be paid for at the contract lump sum price for "Grading".

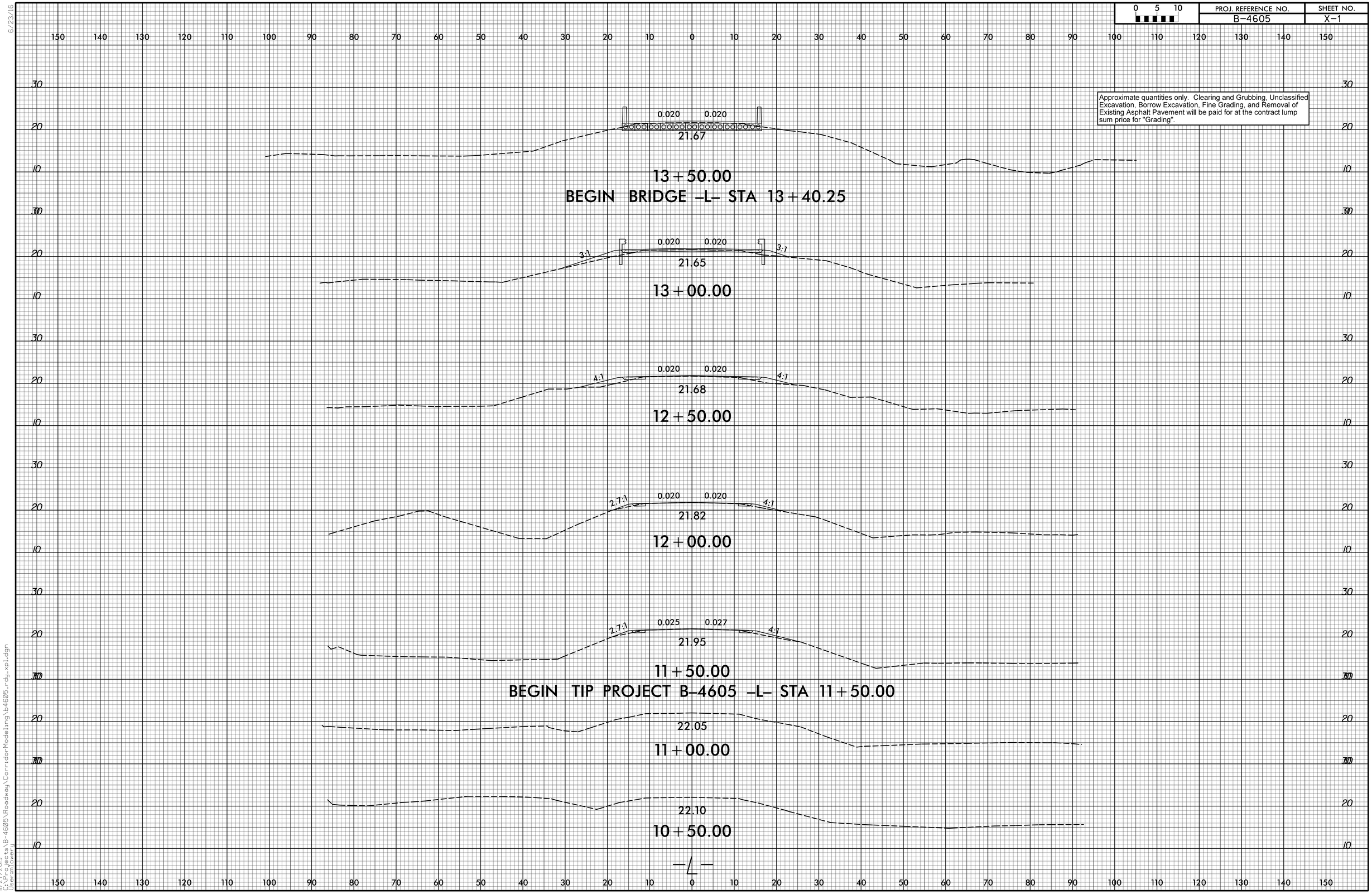

6/23/16

11/27/2019
C:\PWWorkDir\ts\B-4605\Roadway\CorridorModeling\b4605_rdy_xpl.dgn
Usertimlowery

0 5 10	PROJ. REFERENCE NO.	SHEET NO.
	B-4605	X-2

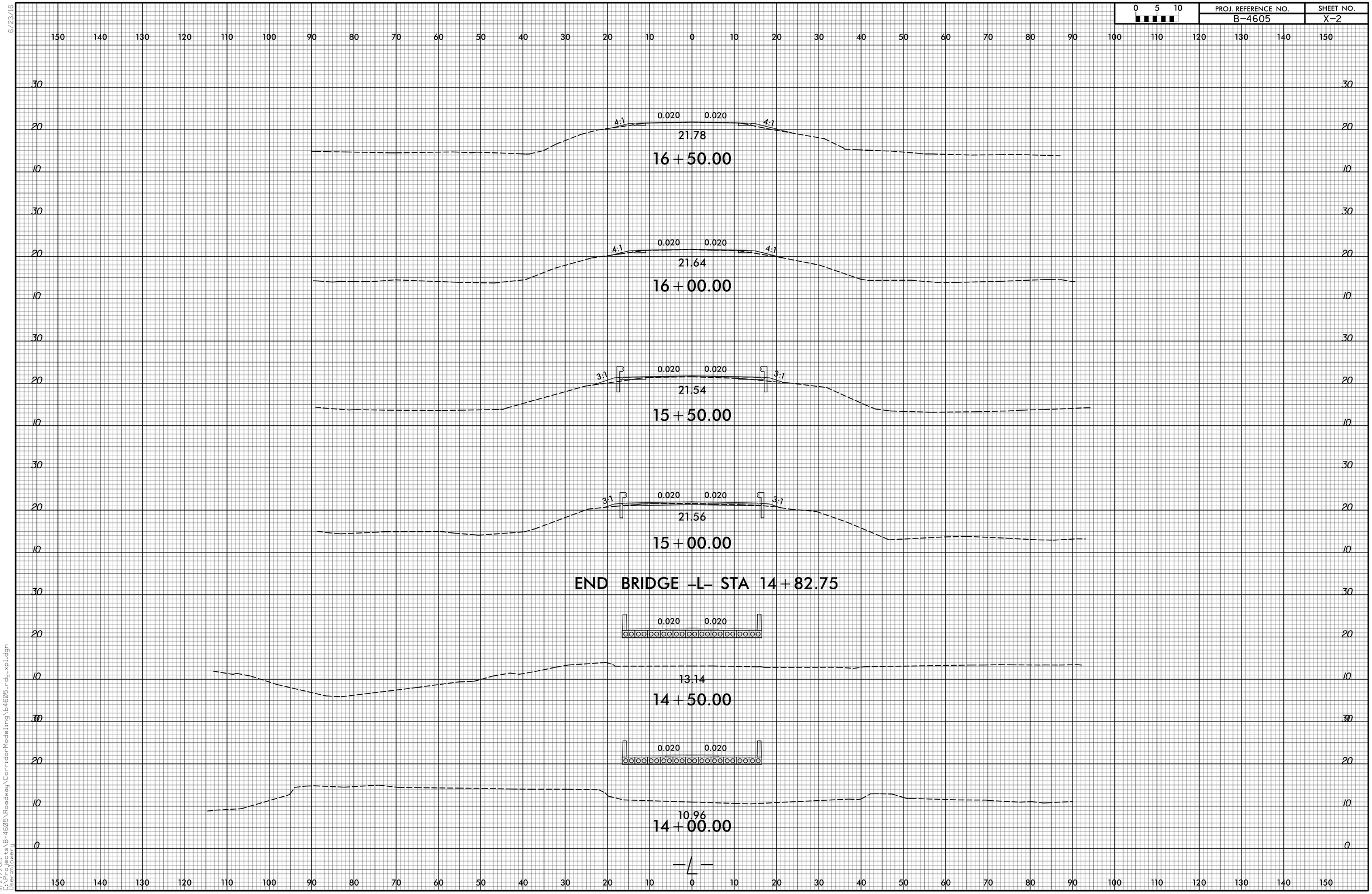

6/23/16

IL 27/2019
C:\PWWorkDirs\B-4605\Roadway\CorridorModeling\b4605_rdy_xpl.dgn
Usertimowery

6/23/16

0 5 10	PROJ. REFERENCE NO.	SHEET NO.
	B-4605	X-3

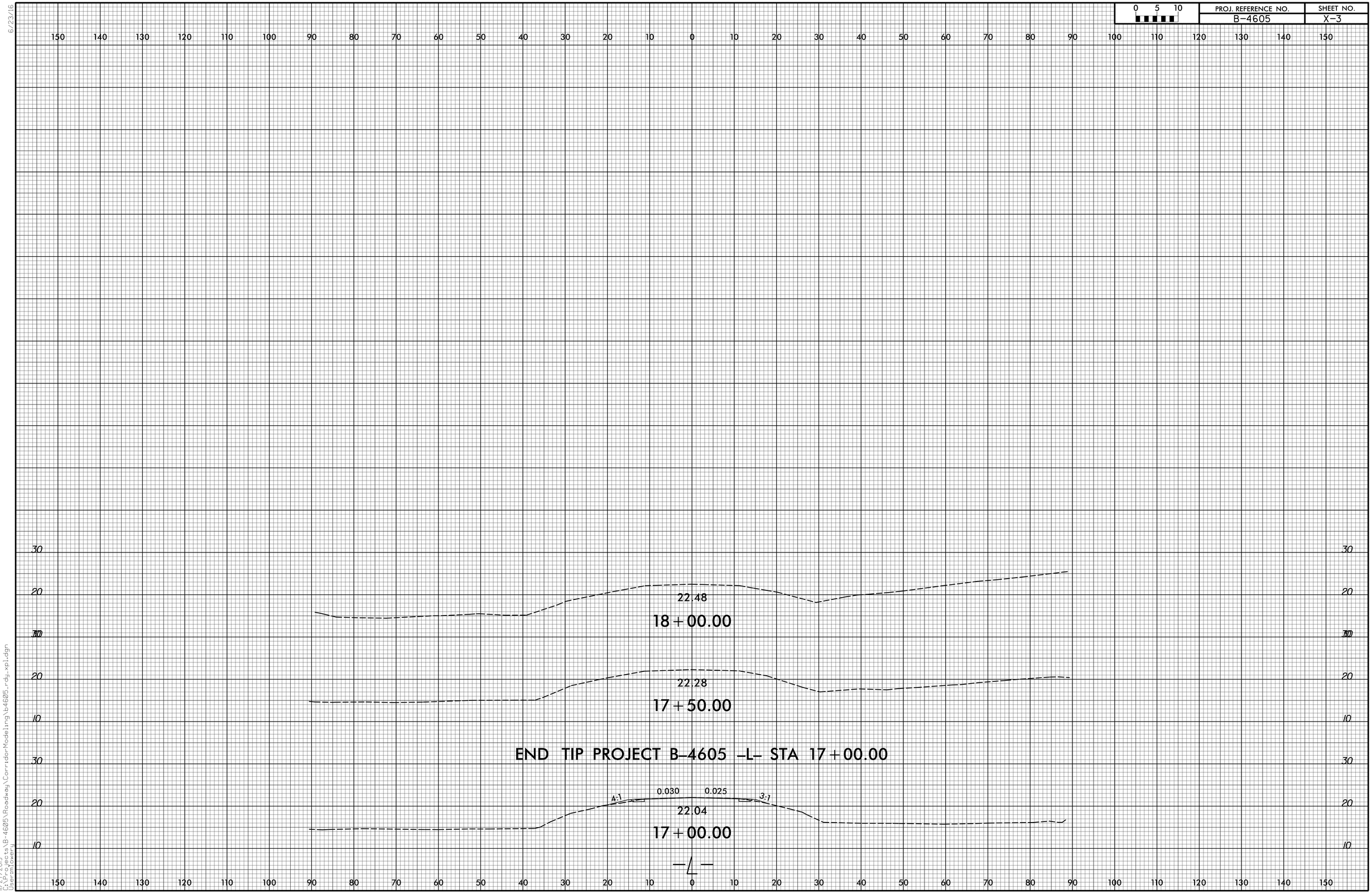

11/27/2019
C:\PWWorkDirs\B-4605\Roadway\CorridorModeling\b4605_rdy_xpl.dgn
Usertimowery

DocuSign Envelope ID: 7E861401-245B-4C2B-B690-FD2B1E14FBB9

09/08/99

TIP PROJECT: B-4605

CONTRACT: C204523

STRUCTURE

STATE OF NORTH CAROLINA
DIVISION OF HIGHWAYS

PITT COUNTY

STATE	STATE PROJECT REFERENCE NO.	SHEET NO.	TOTAL SHEETS
N.C.	B-4605		

STATE PROJ. NO.	F.A. PROJ. NO.	DESCRIPTION
38430.1.3	BRZ-1777(007)	PE
38430.2.1	BRZ-1777(007)	R/W & UTIL
38430.3.1	BRZ-1777(007)	CONST.

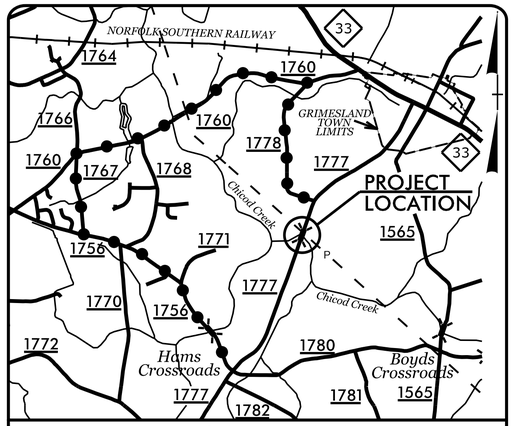

LOCATION: REPLACE BRIDGE 5 OVER CHICOD CREEK ON SR 1777

TYPE OF WORK: GRADING, DRAINAGE, PAVING AND STRUCTURE

NAD 83/ NA 2011

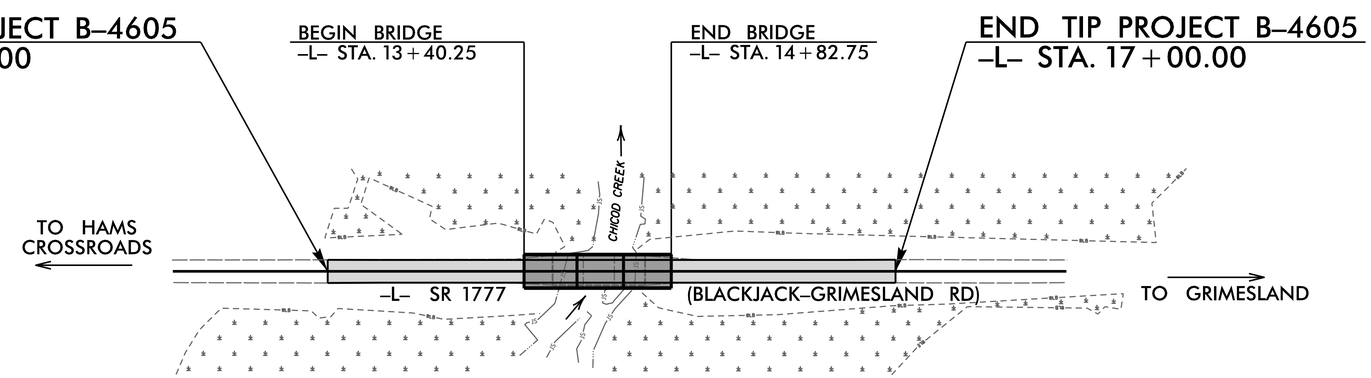

DOCUMENT NOT CONSIDERED FINAL UNLESS ALL SIGNATURES COMPLETED

STATE OF NORTH CAROLINA DEPARTMENT OF TRANSPORTATION

DESIGN DATA

ADT 2019 = 1370
ADT 2039 = 1690
K = 12 %
D = 55 %
T = 5 % *
V = 60 MPH
* (TTST 1% + DUAL 4%)
FUNC CLASS =
MINOR COLLECTOR
SUB-REGIONAL TIER

PROJECT LENGTH

LENGTH ROADWAY TIP PROJECT B-4605	=	0.077 mile
LENGTH STRUCTURES TIP PROJECT B-4605	=	0.027 mile
TOTAL LENGTH TIP PROJECT B-4605	=	0.104 mile

NCDOT CONTACT:

PLANS PREPARED BY:	PLANS PREPARED FOR:
TGS ENGINEERS 706 HILLSBOROUGH ST SUITE 200 RALEIGH, NC 27603	NORTH CAROLINA DEPARTMENT OF TRANSPORTATION 1000 Birch Ridge Dr Raleigh NC, 27610
LETTING DATE: MARCH 17, 2020	MARC CHEEK, PE STRUCTURES DESIGN ENGINEER

2018 STANDARD SPECIFICATIONS

STRUCTURES DESIGN ENGINEER

NORTH CAROLINA PROFESSIONAL SEAL 20125 ENGINEER MARSHALL G. CHEEK, JR.

1/16/2020

DocuSigned by: Marshall G. Cheek Jr.
5FBCC2F3A4DC413...

P.E.

SIGNATURE

STATE OF NORTH CAROLINA DEPARTMENT OF TRANSPORTATION

DocuSign Envelope ID: 040B0656-6ECB-493B-BF51-E17C974D607F

F.A. PROJECT No.: BRZ - 1777 (007)

I HEREBY CERTIFY THESE PLANS ARE THE AS-BUILT PLANS.

SEAL

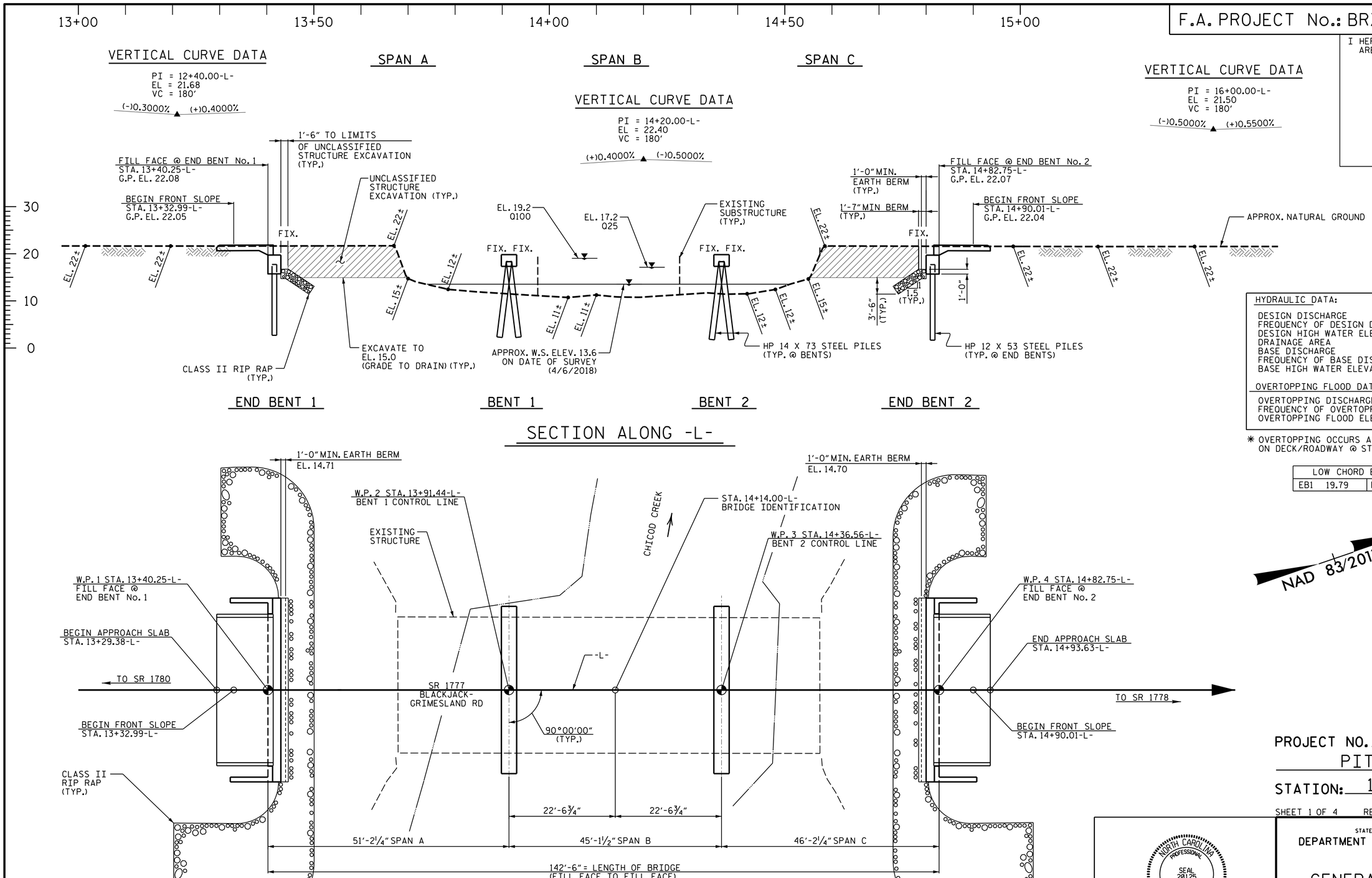

HYDRAULIC DATA:

DESIGN DISCHARGE	1,600 CFS
FREQUENCY OF DESIGN DISCHARGE	25 YRS.
DESIGN HIGH WATER ELEVATION	17.2'
DRAINAGE AREA	22.4 SQ. MI.
BASE DISCHARGE	2,754 CFS
FREQUENCY OF BASE DISCHARGE	100 YRS.
BASE HIGH WATER ELEVATION	19.2

OVERTOPPING FLOOD DATA:

OVERTOPPING DISCHARGE	-- CFS
FREQUENCY OF OVERTOPPING FLOOD	500+ YRS.
OVERTOPPING FLOOD ELEVATION	21.7*

* OVERTOPPING OCCURS AT LOWEST HIGH POINT ON DECK/ROADWAY @ STA. 15+96 -L-.

LOW CHORD ELEVATION	
EB1 19.79	EB2 19.78

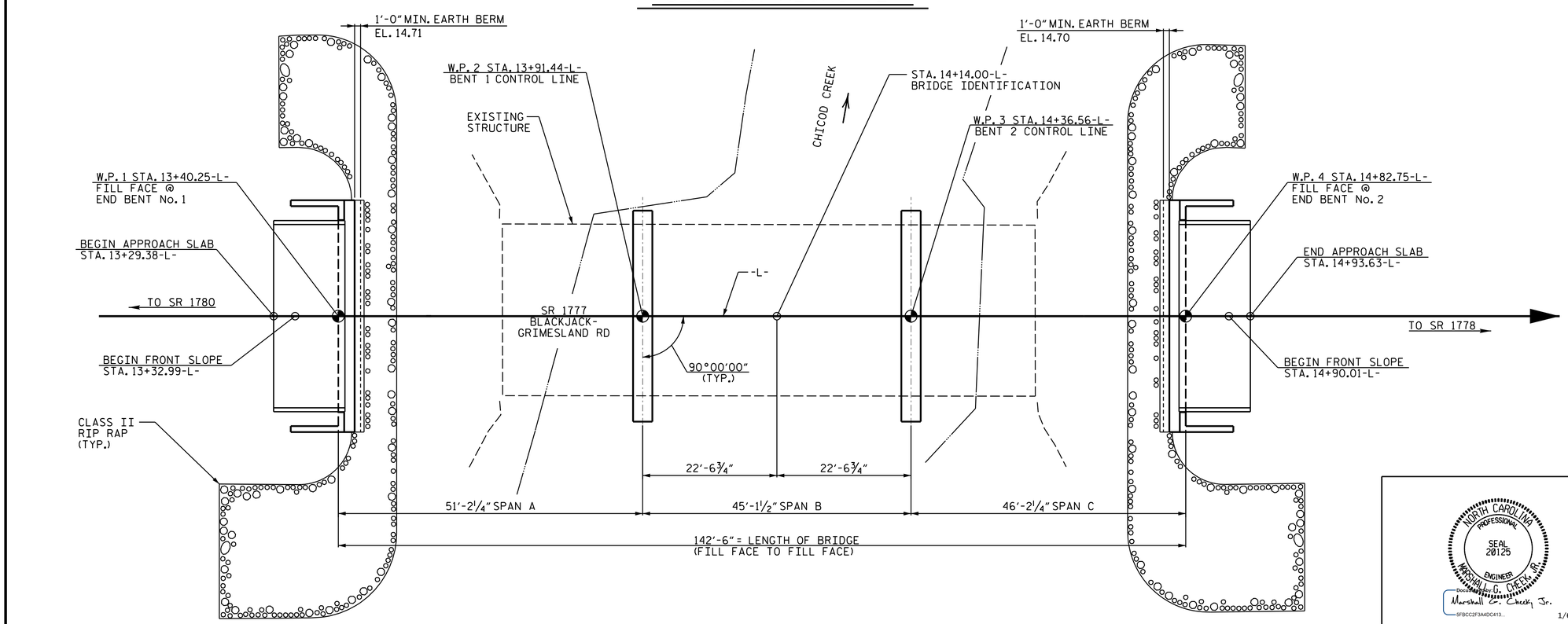

NAD 83/2011

PLAN

PILES NOT SHOWN IN PLAN VIEW FOR CLARITY.

PROJECT NO. B-4605

PITT COUNTY

STATION: 14+14.00 -L-

SHEET 1 OF 4 REPLACES BRIDGE NO. 0005

NORTH CAROLINA PROFESSIONAL SEAL 20125 ENGINEER MARSHALL G. CHEEK, JR.

Marshall G. Cheek, Jr.

1/6/2020

DOCUMENT NOT CONSIDERED FINAL UNLESS ALL SIGNATURES COMPLETED

TGS ENGINEERS
706 HILLSBOROUGH STREET
SUITE 200
RALEIGH, NC 27603
PH (919) 773-8887
CORP. LICENSE NO.: C-0275

STATE OF NORTH CAROLINA
DEPARTMENT OF TRANSPORTATION
RALEIGH

GENERAL DRAWING

FOR BRIDGE OVER CHICOD CREEK ON SR 1777 BETWEEN SR 1780 AND SR 1778

REVISIONS						
NO.	BY:	DATE:	NO.	BY:	DATE:	
1			3			
2			4			

SHEET NO. S-1

TOTAL SHEETS 22

DRAWN BY :	TBE	DATE :	7/18
CHECKED BY :	MGC	DATE :	1/19

DocuSign Envelope ID: 040B0656-6ECB-493B-BF51-E17C974D607F

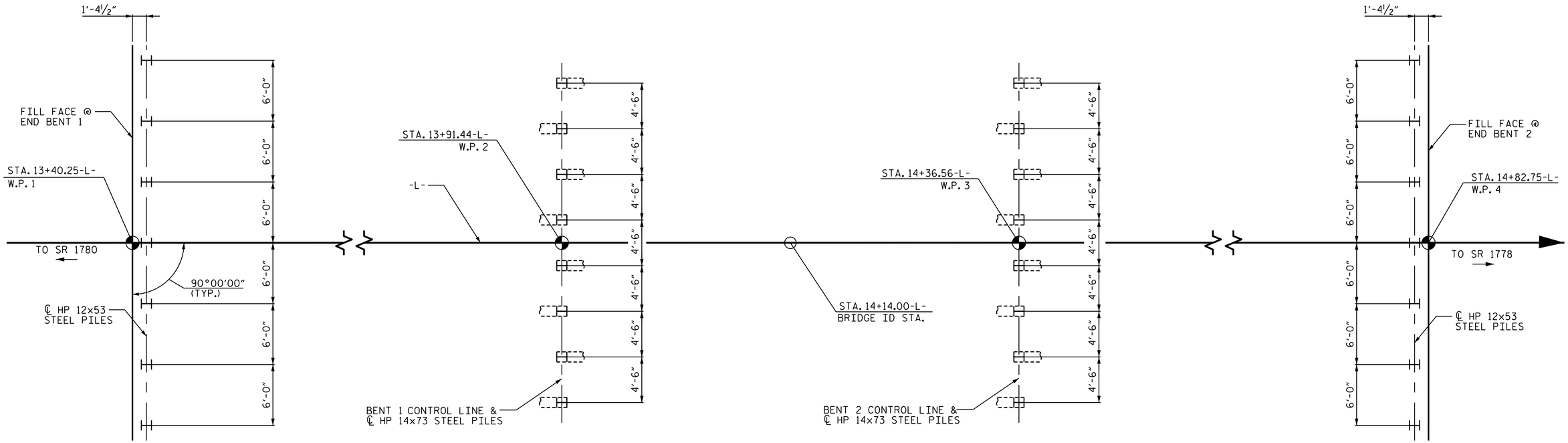

FOUNDATION LAYOUT

ALL END BENT PILES ARE HP 12x53 STEEL PILES.
ALL BENT PILES ARE HP 14x73 GALVANIZED STEEL PILES
DIMENSIONS LOCATING PILES ARE SHOWN TO THE CENTERLINE OF PILES. ORIENT PILES AS SHOWN.
ALL BENT PILES ARE BATTERED AT 1½:12

FOUNDATION RECOMMENDATION NOTES

FOR PILES, SEE SECTION 450 OF THE STANDARD SPECIFICATIONS.

PILES AT END BENT No.1 AND END BENT No.2 ARE DESIGNED FOR A FACTORED RESISTANCE OF 67 TONS PER PILE AND 61 TONS PER PILE RESPECTIVELY.

DRIVE PILES AT END BENT No.1 AND END BENT No.2 TO A REQUIRED DRIVING RESISTANCE OF 115 TONS PER PILE AND 105 TONS PER PILE, RESPECTIVELY.

PILES AT BENT NO.1 AND BENT No.2 ARE DESIGNED FOR A FACTORED RESISTANCE OF 118 TONS PER PILE AND 100 TONS PER PILE, RESPECTIVELY.

DRIVE PILES AT BENT No.1 AND BENT No.2 TO A REQUIRED DRIVING RESISTANCE OF 205 TONS PER PILE AND 175 TONS PER PILE, RESPECTIVELY. THIS REQUIRED DRIVING RESISTANCE INCLUDES ADDITIONAL RESISTANCE FOR DOWNDRAG OR SCOUR.

STEEL H-PILE POINTS ARE REQUIRED FOR STEEL H-PILES AT END BENT NO.1, BENT No.1, BENT No.2 AND END BENT No.2. FOR STEEL PILE POINTS, SEE SECTION 450 OF THE STANDARD SPECIFICATIONS.

THE SCOUR CRITICAL ELEVATION FOR BENT No.1 AND BENT No.2 IS ELEVATION -5 FT. SCOUR CRITICAL ELEVATIONS ARE USED TO MONITOR POSSIBLE SCOUR PROBLEMS DURING THE LIFE OF THE STRUCTURE.

TESTING PILES WITH THE PDA DURING DRIVING, RESTRIKING OR REDRIVING MAY BE REQUIRED. THE ENGINEER WILL DETERMINE THE NEED FOR PDA TESTING. FOR PDA TESTING, SEE SECTION 450 OF THE STANDARD SPECIFICATIONS.

PROJECT NO. B-4605
PITT COUNTY
STATION: 14+14.00 -L-

SHEET 2 OF 4

NORTH CAROLINA PROFESSIONAL SEAL 20125 ENGINEER
MARSHALL G. CHECK, JR.
Marshall G. Check, Jr.
5FBCC2F3A4DC413...
1/6/2020

DOCUMENT NOT CONSIDERED FINAL UNLESS ALL SIGNATURES COMPLETED

TGS ENGINEERS
706 HILLSBOROUGH STREET
SUITE 200
RALEIGH, NC 27603
PH (919) 773-8887
CORP. LICENSE NO.: C-0275

STATE OF NORTH CAROLINA
DEPARTMENT OF TRANSPORTATION
RALEIGH

GENERAL DRAWING
FOR BRIDGE OVER CHICOD CREEK ON SR 1777 BETWEEN SR 1780 AND SR 1778

REVISIONS						SHEET NO.
NO.	BY:	DATE:	NO.	BY:	DATE:	S-2
1			3			TOTAL SHEETS
2			4			22

DRAWN BY :	CCC	DATE :	11/18
CHECKED BY :	MGC	DATE :	1/19

DocuSign Envelope ID: 040B0656-6ECB-493B-BF51-E17C974D607F

BENCH MARK #1: RAILROAD SPIKE IN 30" GUM TREE, 33' RT. OF STA. 12+40 -L-, ELEV.= 19.22 (NAVD 88)

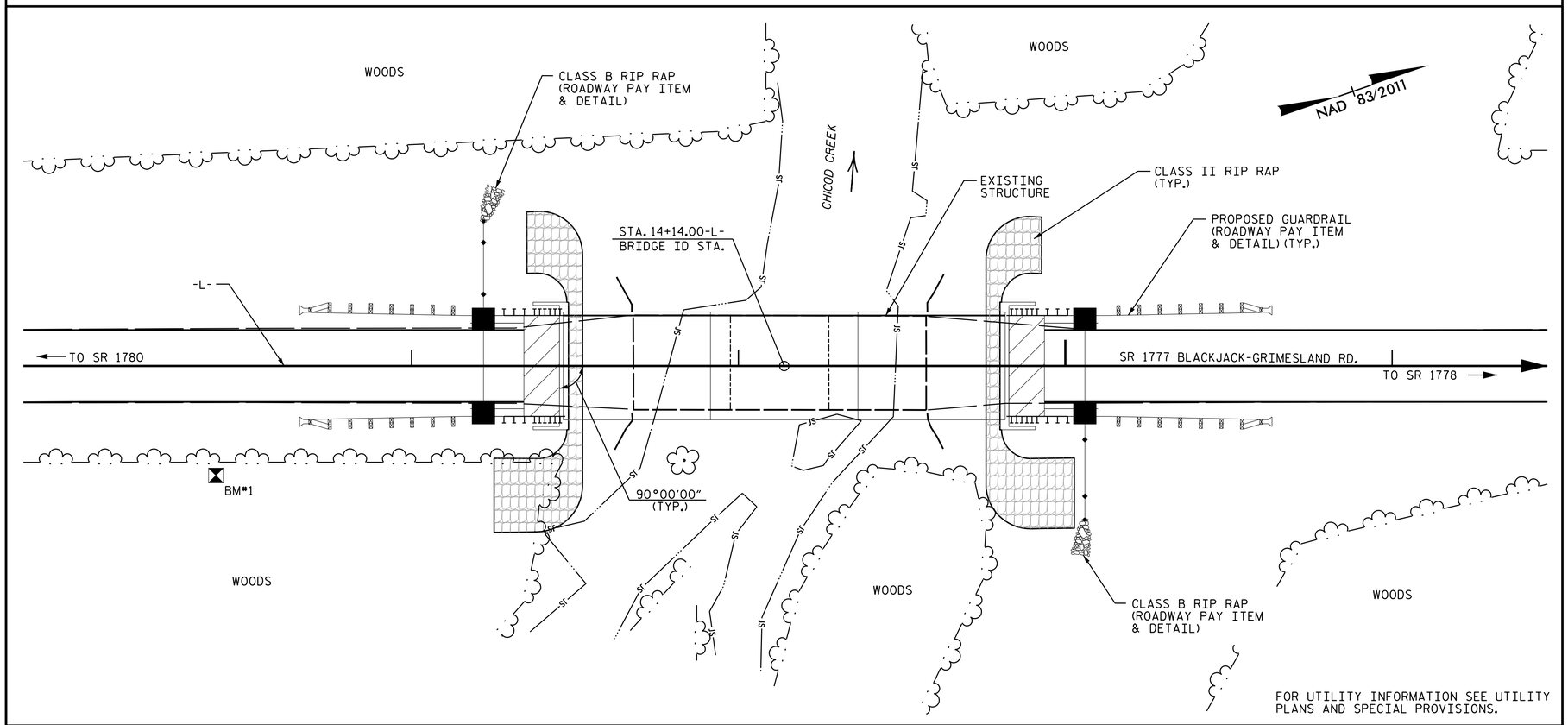

LOCATION SKETCH

SAMPLE BAR REPLACEMENT	
SIZE	LENGTH
#3	6'-2"
#4	7'-4"
#5	8'-6"
#6	9'-8"
#7	10'-10"
#8	12'-0"
#9	13'-2"
#10	14'-6"
#11	15'-10"

NOTES

ASSUMED LIVE LOAD = HL-93 OR ALTERNATE LOADING.

FOR OTHER DESIGN DATA AND GENERAL NOTES, SEE SHEET SN (S-22).

FOR EROSION CONTROL MEASURES, SEE EROSION CONTROL PLANS.

THIS BRIDGE HAS BEEN DESIGNED IN ACCORDANCE WITH THE AASHTO LRFD BRIDGE DESIGN SPECIFICATIONS.

THE EXISTING STRUCTURE CONSISTING OF 3 SPANS (1 @ 30'-5", 1 @ 30'-0", 1 @ 30'-7") PRESTRESSED CONCRETE CHANNELS WITH A 4" ASPHALT WEARING SURFACE, AND A SUBSTRUCTURE CONSISTING OF PPC CAPS/TIMBER PILES SHALL BE REMOVED. THE EXISTING BRIDGE IS PRESENTLY POSTED BELOW THE LEGAL LOAD LIMIT. SHOULD THE STRUCTURAL INTEGRITY OF THE BRIDGE DETERIORATE DURING CONSTRUCTION OF THE PROPOSED BRIDGE, THIS LOAD LIMIT MAY BE REDUCED AS FOUND NECESSARY DURING THE LIFE OF THE PROJECT.

REMOVAL OF THE EXISTING BRIDGE SHALL BE PERFORMED IN A MANNER THAT PREVENTS DEBRIS FROM FALLING INTO WATER. THE CONTRACTOR SHALL SUBMIT DEMOLITION PLANS FOR REVIEW AND REMOVE THE BRIDGE IN ACCORDANCE WITH ARTICLE 402-2 OF THE STANDARD SPECIFICATIONS.

ASPHALT WEARING SURFACE IS INCLUDED IN ROADWAY QUANTITIES ON ROADWAY PLANS.

THIS STRUCTURE HAS BEEN DESIGNED IN ACCORDANCE WITH HEC 18, "EVALUATING SCOUR AT BRIDGES".

FOR GROUT FOR STRUCTURES, SEE SPECIAL PROVISIONS.

THIS BRIDGE IS LOCATED IN SEISMIC ZONE 1.

FOR FALSEWORK AND FORMWORK, SEE SPECIAL PROVISIONS.

FOR SUBMITTAL OF WORKING DRAWINGS, SEE SPECIAL PROVISIONS.

FOR CRANE SAFETY, SEE SPECIAL PROVISIONS.

FOR ASBESTOS ASSESSMENT FOR BRIDGE DEMOLITION AND RENOVATION ACTIVITIES, SEE SPECIAL PROVISIONS.

THE MATERIAL SHOWN IN THE CROSS-HATCHED AREA (SHEET S-1) SHALL BE EXCAVATED FOR A DISTANCE OF 40FT (LT) AND 40FT (RT) OF CENTERLINE ROADWAY AT END BENT 1 AND 35FT (LT) AND 40FT (RT) OF CENTERLINE ROADWAY AT END BENT 2 AS DIRECTED BY THE ENGINEER. THIS WORK WILL BE PAID FOR AT THE CONTRACT LUMP SUM PRICE FOR UNCLASSIFIED STRUCTURE EXCAVATION. SEE SECTION 412 OF THE STANDARD SPECIFICATIONS.

THIS BRIDGE SHALL BE CONSTRUCTED USING TOP-DOWN CONSTRUCTION METHODS. THE USE OF A TEMPORARY CAUSEWAY OR WORK BRIDGE IS NOT PERMITTED.

THE SUBSTRUCTURE OF THE EXISTING BRIDGE INDICATED ON THE PLANS IS FROM THE BEST INFORMATION AVAILABLE. THIS INFORMATION IS SHOWN FOR THE CONVENIENCE OF THE CONTRACTOR. THE CONTRACTOR SHALL HAVE NO CLAIM WHATSOEVER AGAINST THE DEPARTMENT OF TRANSPORTATION FOR ANY DELAYS OR ADDITIONAL COST INCURRED BASED ON DIFFERENCES BETWEEN THE EXISTING BRIDGE SUBSTRUCTURE SHOWN ON THE PLANS AND THE ACTUAL CONDITIONS AT THE PROJECT SITE.

FOR FIBER OPTIC CONDUIT SYSTEM, SEE SPECIAL PROVISIONS.

THE CONTRACTOR SHALL PROVIDE INDEPENDENT ASSURANCE SAMPLES OF REINFORCING STEEL AS FOLLOWS: FOR PROJECTS REQUIRING UP TO 400 TONS (360,000 KG) OF REINFORCING STEEL, ONE 30 INCH (760 MM) SAMPLE OF EACH SIZE BAR USED, AND FOR PROJECTS REQUIRING OVER 400 TONS (360,000 KG) OF REINFORCING STEEL, TWO 30 INCH (760 MM) SAMPLES OF EACH SIZE BAR USED. THE SAMPLE BARS SHOULD COME FROM STEEL ACTUALLY USED IN THE PROJECT AND THE SAMPLE BARS SHOULD BE REPLACED BY SPLICED BARS AS SPECIFIED IN THE SAMPLE BAR REPLACEMENT CHART. PAYMENT FOR THE SAMPLE BARS AND REPLACEMENT REINFORCING STEEL SHALL BE CONSIDERED INCIDENTAL TO VARIOUS PAY ITEMS.

PROJECT NO. B-4605
PITT COUNTY
STATION: 14+14.00 -L-

SHEET 3 OF 4

NORTH CAROLINA PROFESSIONAL SEAL 20125 ENGINEER MARSHALL G. CHECKY, JR.
DocuSigned by: Marshall G. Checky, Jr.
5FBCC2F3A4DC413...
1/6/2020

DOCUMENT NOT CONSIDERED FINAL UNLESS ALL SIGNATURES COMPLETED

TGS ENGINEERS
706 HILLSBOROUGH STREET
SUITE 200
RALEIGH, NC 27603
PH (919) 773-8887
CORP. LICENSE NO.: C-0275

STATE OF NORTH CAROLINA
DEPARTMENT OF TRANSPORTATION
RALEIGH

GENERAL DRAWING

FOR BRIDGE OVER CHICOD CREEK ON SR 1777 BETWEEN SR 1780 AND SR 1778

REVISIONS								SHEET NO.
NO.	BY:	DATE:	NO.	BY:	DATE:			S-3
1			3					TOTAL SHEETS
2			4					22

DRAWN BY :	CCC	DATE :	11/18
CHECKED BY :	MGC	DATE :	1/19

DocuSign Envelope ID: 040B0656-6ECB-493B-BF51-E17C974D607F

TOTAL BILL OF MATERIAL

	REMOVAL OF EXISTING STRUCTURE	ASBESTOS ASSESSMENT	PDA TESTING	UNCLASSIFIED STRUCTURE EXCAVATION	CLASS "A" CONCRETE	BRIDGE APPROACH SLABS	REINFORCING STEEL	PILE DRIVING EQUIPMENT SETUP FOR HP 12x53 STEEL PILES	PILE DRIVING EQUIPMENT SETUP FOR HP 14x73 GALVANIZED STEEL PILES	HP 12x53 STEEL PILES		HP 14x73 GALVANIZED STEEL PILES		STEEL PILE POINTS	PILE REDRIVES
	LUMP SUM	LUMP SUM	EA.	LUMP SUM	C.Y.	LUMP SUM	LBS.	EA.	EA.	NO.	LIN. FT.	NO.	LIN. FT.	EA.	EA.
SUPERSTRUCTURE															
END BENT 1					21.6		2636	7		7	350			7	4
BENT 1					10.7		2136		8			8	440	8	4
BENT 2					10.7		2136		8			8	440	8	4
END BENT 2					21.6		2636	7		7	315			7	4
TOTALS	LUMP SUM	LUMP SUM	1	LUMP SUM	64.6	LUMP SUM	9544	14	16	14	665	16	880	30	16

TOTAL BILL OF MATERIAL CONT'D.

VERTICAL CONCRETE BARRIER RAIL	RIP RAP CLASS II (2'-0" THK.)	GEOTEXTILE FOR DRAINAGE	ELASTOMERIC BEARINGS	3'-0" x 1'-9" PRESTRESSED CONCRETE CORED SLABS		FIBER OPTIC CONDUIT SYSTEM
LIN. FT.	TONS	SQ. YDS.	LUMP SUM	NO.	LIN. FT.	LIN. FT.
280.50				33	1540.00	276.50
	120	135				
	120	135				
280.50	240	270	LUMP SUM	33	1540.00	276.50

PROJECT NO. B-4605

PITT COUNTY

STATION: 14+14.00 -L-

SHEET 4 OF 4

NORTH CAROLINA PROFESSIONAL SEAL 20125 ENGINEER MARSHALL C. CHEEK, JR.

DocuSigned by: Marshall C. Cheek, Jr.
5FBCC2F3A4DC413...
1/6/2020

STATE OF NORTH CAROLINA
DEPARTMENT OF TRANSPORTATION
RALEIGH

GENERAL DRAWING

FOR BRIDGE OVER CHICOD CREEK ON SR 1777 BETWEEN SR 1780 AND SR 1778

DOCUMENT NOT CONSIDERED FINAL UNLESS ALL SIGNATURES COMPLETED

TGS ENGINEERS
706 HILLSBOROUGH STREET
SUITE 200
RALEIGH, NC 27603
PH (919) 773-8887
CORP. LICENSE NO.: C-0275

REVISIONS						
NO.	BY:	DATE:	NO.	BY:	DATE:	
1			3			
2			4			

SHEET NO. S-4

TOTAL SHEETS 22

DRAWN BY :	CCC	DATE :	11/18
CHECKED BY :	MGC	DATE :	1/19

DocuSign Envelope ID: 040B0656-6ECB-493B-BF51-E17C974D607F

LOAD AND RESISTANCE FACTOR RATING (LRFD) SUMMARY FOR PRESTRESSED CONCRETE GIRDERS

LEVEL		VEHICLE	WEIGHT (W) (TONS)	CONTROLLING LOAD RATING	MINIMUM RATING FACTORS (RF)	TONS = W X RF	STRENGTH I LIMIT STATE											SERVICE III LIMIT STATE						COMMENT NUMBER
							LIVELOAD FACTORS	MOMENT					SHEAR					LIVELOAD FACTORS	MOMENT					
								DISTRIBUTION FACTORS (DF)	RATING FACTOR	SPAN	GIRDER LOCATION	DISTANCE FROM LEFT END OF SPAN (ft)	DISTRIBUTION FACTORS (DF)	RATING FACTOR	SPAN	GIRDER LOCATION	DISTANCE FROM LEFT END OF SPAN (ft)		DISTRIBUTION FACTORS (DF)	RATING FACTOR	SPAN	GIRDER LOCATION	DISTANCE FROM LEFT END OF SPAN (ft)	
DESIGN LOAD RATING		HL-93(Inv)	N/A	1	1.394	--	1.75	0.276	1.57	50'	EL	24.5	0.531	**1.39**	50'	EL	**2.45**	0.80	0.276	1.44	50'	EL	24.5	
		HL-93(Opr)	N/A	--	1.807	--	1.35	0.276	2.03	50'	EL	24.5	0.531	1.81	50'	EL	2.45	N/A	--	--	--	--	--	
		HS-20(Inv)	36.000	2	1.667	60.007	1.75	0.276	1.95	50'	EL	24.5	0.531	**1.67**	50'	EL	**2.45**	0.80	0.276	1.79	50'	EL	24.5	
		HS-20(Opr)	36.000	--	2.161	77.787	1.35	0.276	2.52	50'	EL	24.5	0.531	2.16	50'	EL	2.45	N/A	--	--	--	--	--	
LEGAL LOAD RATING	SV	SNSH	13.500	--	3.635	49.079	1.4	0.276	4.95	50'	EL	24.5	0.531	4.7	50'	EL	2.45	0.80	0.276	3.64	50'	EL	24.5	
		SNGARBS2	20.000	--	2.871	57.42	1.4	0.276	3.91	50'	EL	24.5	0.531	3.42	50'	EL	2.45	0.80	0.276	2.87	50'	EL	24.5	
		SNAGRIS2	22.000	--	2.778	61.109	1.4	0.276	3.78	50'	EL	19.6	0.531	3.21	50'	EL	2.45	0.80	0.276	2.78	50'	EL	24.5	
		SNCOTTS3	27.250	--	1.814	49.418	1.4	0.276	2.47	50'	EL	24.5	0.531	2.36	50'	EL	2.45	0.80	0.276	1.81	50'	EL	24.5	
		SNAGGRS4	34.925	--	1.577	55.063	1.4	0.276	2.15	50'	EL	24.5	0.531	2.01	50'	EL	2.45	0.80	0.276	1.58	50'	EL	24.5	
		SNS5A	35.550	--	1.537	54.657	1.4	0.276	2.09	50'	EL	24.5	0.531	2.07	50'	EL	2.45	0.80	0.276	1.54	50'	EL	24.5	
		SNS6A	39.950	--	1.438	57.43	1.4	0.276	1.96	50'	EL	24.5	0.531	1.91	50'	EL	2.45	0.80	0.276	1.44	50'	EL	24.5	
		SNS7B	42.000	--	1.370	57.54	1.4	0.276	1.87	50'	EL	24.5	0.531	1.91	50'	EL	2.45	0.80	0.276	1.37	50'	EL	24.5	
	TTST	TNAGRIT3	33.000	--	1.761	58.118	1.4	0.276	2.4	50'	EL	24.5	0.531	2.25	50'	EL	2.45	0.80	0.276	1.76	50'	EL	24.5	
		TNT4A	33.075	--	1.777	58.759	1.4	0.276	2.42	50'	EL	24.5	0.531	2.17	50'	EL	2.45	0.80	0.276	1.78	50'	EL	24.5	
		TNT6A	41.600	--	1.480	61.558	1.4	0.276	2.01	50'	EL	24.5	0.531	2.08	50'	EL	2.45	0.80	0.276	1.48	50'	EL	24.5	
		TNT7A	42.000	--	1.502	63.087	1.4	0.276	2.05	50'	EL	24.5	0.531	1.94	50'	EL	2.45	0.80	0.276	1.50	50'	EL	24.5	
		TNT7B	42.000	--	1.566	65.773	1.4	0.276	2.13	50'	EL	24.5	0.531	1.84	50'	EL	2.45	0.80	0.276	1.57	50'	EL	24.5	
		TNAGRIT4	43.000	--	1.486	63.902	1.4	0.276	2.02	50'	EL	24.5	0.531	1.77	50'	EL	2.45	0.80	0.276	1.49	50'	EL	24.5	
		TNAGT5A	45.000	--	1.388	62.47	1.4	0.276	1.89	50'	EL	24.5	0.531	1.8	50'	EL	2.45	0.80	0.276	1.39	50'	EL	24.5	
		TNAGT5B	45.000	3	1.360	61.206	1.4	0.276	1.85	50'	EL	24.5	0.531	1.68	50'	EL	2.45	0.80	0.276	**1.36**	50'	EL	**24.5**	

LOAD FACTORS:

DESIGN LOAD RATING FACTORS	LIMIT STATE	γ_{DC}	γ_{DW}
	STRENGTH I	1.25	1.50
	SERVICE III	1.00	1.00

NOTES:

MINIMUM RATING FACTORS ARE BASED ON THE STRENGTH I AND SERVICE III LIMIT STATES.

ALLOWABLE STRESSES FOR SERVICE III LIMIT STATE ARE AS REQUIRED FOR DESIGN.

COMMENTS:

1.
2.
3.
4.

(#) CONTROLLING LOAD RATING

(1) DESIGN LOAD RATING (HL-93)

(2) DESIGN LOAD RATING (HS-20)

(3) LEGAL LOAD RATING **

** SEE CHART FOR VEHICLE TYPE

GIRDER LOCATION

I - INTERIOR GIRDER
EL - EXTERIOR LEFT GIRDER
ER - EXTERIOR RIGHT GIRDER

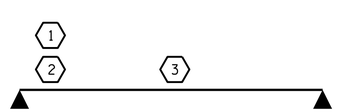

LRFR SUMMARY

FOR SPAN 'A'

PROJECT NO. B-4605

PITT COUNTY

STATION: 14+14.00 -L-

SHEET 1 OF 2

NORTH CAROLINA PROFESSIONAL SEAL 20125 ENGINEER MARSHALL G. CHEEK, JR.

Marshall G. Cheek, Jr.
5FBCC2F3A4DC413...
1/6/2020

DOCUMENT NOT CONSIDERED FINAL UNLESS ALL SIGNATURES COMPLETED

TGS ENGINEERS
706 HILLSBOROUGH STREET
SUITE 200
RALEIGH, NC 27603
PH (919) 773-8887
CORP. LICENSE NO.: C-0275

STATE OF NORTH CAROLINA
DEPARTMENT OF TRANSPORTATION
RALEIGH

STANDARD

LRFR SUMMARY FOR 50' CORED SLAB UNIT 90° SKEW (NON-INTERSTATE TRAFFIC)

REVISIONS						
NO.	BY:	DATE:	NO.	BY:	DATE:	
1			3			
2			4			

SHEET NO. S-5

TOTAL SHEETS 22

ASSEMBLED BY :	CCC	DATE :	11/18
CHECKED BY :	MGC	DATE :	1/19
DRAWN BY : CVC	6/10		
CHECKED BY : DNS	6/10		

STD. NO. 21LRFR1_90S_50L

DocuSign Envelope ID: 040B0656-6ECB-493B-BF51-E17C974D607F

LOAD AND RESISTANCE FACTOR RATING (LRFD) SUMMARY FOR PRESTRESSED CONCRETE GIRDERS

LEVEL		VEHICLE	WEIGHT (W) (TONS)	CONTROLLING LOAD RATING	MINIMUM RATING FACTORS (RF)	TONS = W X RF	STRENGTH I LIMIT STATE											SERVICE III LIMIT STATE						COMMENT NUMBER
							LIVELOAD FACTORS	MOMENT					SHEAR					LIVELOAD FACTORS	MOMENT					
								DISTRIBUTION FACTORS (DF)	RATING FACTOR	SPAN	GIRDER LOCATION	DISTANCE FROM LEFT END OF SPAN (ft)	DISTRIBUTION FACTORS (DF)	RATING FACTOR	SPAN	GIRDER LOCATION	DISTANCE FROM LEFT END OF SPAN (ft)		DISTRIBUTION FACTORS (DF)	RATING FACTOR	SPAN	GIRDER LOCATION	DISTANCE FROM LEFT END OF SPAN (ft)	
DESIGN LOAD RATING		HL-93(Inv)	N/A	1	1.088	--	1.75	0.277	1.34	45'	EL	22	0.539	1.23	45'	EL	2.2	0.80	0.277	**1.09**	45'	EL	**22**	
		HL-93(Opr)	N/A	--	1.590	--	1.35	0.277	1.74	45'	EL	22	0.539	1.59	45'	EL	2.2	N/A	--	--	--	--	--	
		HS-20(Inv)	36.000	2	1.336	48.104	1.75	0.277	1.65	45'	EL	22	0.539	1.45	45'	EL	2.2	0.80	0.277	**1.34**	45'	EL	**22**	
		HS-20(Opr)	36.000	--	1.882	67.763	1.35	0.277	2.14	45'	EL	22	0.539	1.88	45'	EL	2.2	N/A	--	--	--	--	--	
LEGAL LOAD RATING	SV	SNSH	13.500	--	2.611	35.252	1.4	0.277	4.02	45'	EL	22	0.539	4.01	45'	EL	2.2	0.80	0.277	2.61	45'	EL	22	
		SNGARBS2	20.000	--	2.108	42.166	1.4	0.277	3.25	45'	EL	22	0.539	2.94	45'	EL	2.2	0.80	0.277	2.11	45'	EL	22	
		SNAGRIS2	22.000	--	2.067	45.466	1.4	0.277	3.15	45'	EL	17.6	0.539	2.77	45'	EL	2.2	0.80	0.277	2.07	45'	EL	22	
		SNCOTTS3	27.250	--	1.304	35.527	1.4	0.277	2.01	45'	EL	22	0.539	2.01	45'	EL	2.2	0.80	0.277	1.30	45'	EL	22	
		SNAGGRS4	34.925	--	1.150	40.181	1.4	0.277	1.77	45'	EL	22	0.539	1.74	45'	EL	2.2	0.80	0.277	1.15	45'	EL	22	
		SNS5A	35.550	--	1.121	39.841	1.4	0.277	1.73	45'	EL	22	0.539	1.79	45'	EL	2.2	0.80	0.277	1.12	45'	EL	22	
		SNS6A	39.950	--	1.056	42.175	1.4	0.277	1.63	45'	EL	22	0.539	1.67	45'	EL	2.2	0.80	0.277	1.06	45'	EL	22	
		SNS7B	42.000	3	1.006	42.268	1.4	0.277	1.55	45'	EL	22	0.539	1.68	45'	EL	2.2	0.80	0.277	**1.01**	45'	EL	**22**	
	TTST	TNAGRIT3	33.000	--	1.296	42.759	1.4	0.277	2	45'	EL	22	0.539	1.96	45'	EL	2.2	0.80	0.277	1.30	45'	EL	22	
		TNT4A	33.075	--	1.309	43.305	1.4	0.277	2.02	45'	EL	22	0.539	1.88	45'	EL	2.2	0.80	0.277	1.31	45'	EL	22	
		TNT6A	41.600	--	1.099	45.712	1.4	0.277	1.69	45'	EL	22	0.539	1.83	45'	EL	2.2	0.80	0.277	1.10	45'	EL	22	
		TNT7A	42.000	--	1.120	47.043	1.4	0.277	1.73	45'	EL	22	0.539	1.69	45'	EL	2.2	0.80	0.277	1.12	45'	EL	22	
		TNT7B	42.000	--	1.166	48.975	1.4	0.277	1.8	45'	EL	22	0.539	1.61	45'	EL	2.2	0.80	0.277	1.17	45'	EL	22	
		TNAGRIT4	43.000	--	1.111	47.757	1.4	0.277	1.71	45'	EL	22	0.539	1.55	45'	EL	2.2	0.80	0.277	1.11	45'	EL	22	
		TNAGT5A	45.000	--	1.033	46.505	1.4	0.277	1.59	45'	EL	22	0.539	1.59	45'	EL	2.2	0.80	0.277	1.03	45'	EL	22	
		TNAGT5B	45.000	--	1.009	45.408	1.4	0.277	1.56	45'	EL	22	0.539	1.47	45'	EL	2.2	0.80	0.277	1.01	45'	EL	22	

LOAD FACTORS:

DESIGN LOAD RATING FACTORS	LIMIT STATE	γ_{DC}	γ_{DW}
	STRENGTH I	1.25	1.50
	SERVICE III	1.00	1.00

NOTES:

MINIMUM RATING FACTORS ARE BASED ON THE STRENGTH I AND SERVICE III LIMIT STATES.

ALLOWABLE STRESSES FOR SERVICE III LIMIT STATE ARE AS REQUIRED FOR DESIGN.

COMMENTS:

1.
2.
3.
4.

(#) CONTROLLING LOAD RATING

(1) DESIGN LOAD RATING (HL-93)
(2) DESIGN LOAD RATING (HS-20)
(3) LEGAL LOAD RATING **

** SEE CHART FOR VEHICLE TYPE

GIRDER LOCATION

I - INTERIOR GIRDER
EL - EXTERIOR LEFT GIRDER
ER - EXTERIOR RIGHT GIRDER

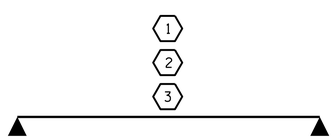

LRFR SUMMARY

FOR SPAN 'B' AND 'C'

PROJECT NO. B-4605

PITT COUNTY

STATION: 14+14.00 -L-

SHEET 2 OF 2

NORTH CAROLINA PROFESSIONAL SEAL 20125 ENGINEER MARSHALL G. CHECK, JR.

DocuSigned by: Marshall G. Check, Jr. 5FBCC2F3A4DC413...

1/6/2020

DOCUMENT NOT CONSIDERED FINAL UNLESS ALL SIGNATURES COMPLETED

TGS ENGINEERS
706 HILLSBOROUGH STREET
SUITE 200
RALEIGH, NC 27603
PH (919) 773-8887
CORP. LICENSE NO.: C-0275

STATE OF NORTH CAROLINA
DEPARTMENT OF TRANSPORTATION
RALEIGH

STANDARD
LRFR SUMMARY FOR 45' CORED SLAB UNIT 90° SKEW
(NON-INTERSTATE TRAFFIC)

REVISIONS						SHEET NO.
NO.	BY:	DATE:	NO.	BY:	DATE:	S-6
1			3			TOTAL SHEETS
2			4			22

ASSEMBLED BY :	CCC	DATE :	11/18
CHECKED BY :	MGC	DATE :	1/19
DRAWN BY : CVC	6/10		
CHECKED BY : DNS	6/10		

STD. NO. 21LRFR1_90S_45L

DocuSign Envelope ID: 040B0656-6ECB-493B-BF51-E17C974D607F

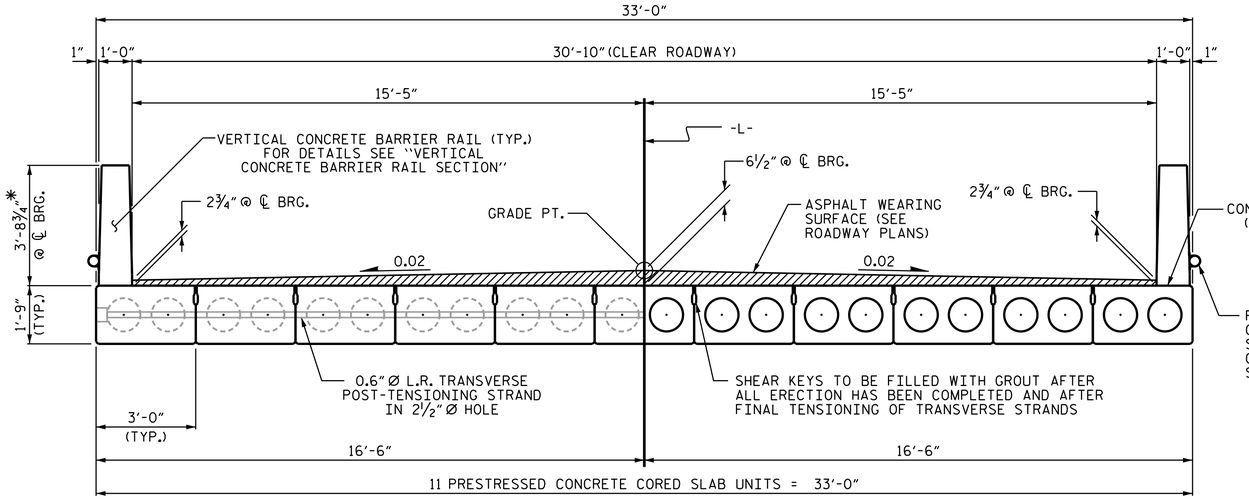

HALF SECTION
AT INTERMEDIATE DIAPHRAGMS

HALF SECTION
THROUGH VOIDS

TYPICAL SECTION

* - THE MAXIMUM BARRIER RAIL HEIGHT AND ASPHALT THICKNESS IS SHOWN. THE HEIGHT OF THE BARRIER RAIL AND ASPHALT THICKNESS VARIES WHILE THE TOP OF THE BARRIER RAIL FOLLOWS THE PROFILE OF THE GUTTERLINE. FOR RAIL HEIGHT DETAILS AND ASPHALT THICKNESS SEE THE "VERTICAL CONCRETE BARRIER RAIL SECTION" DETAIL.

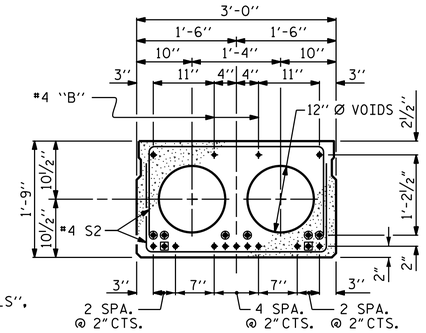

INTERIOR SLAB SECTION (45' UNIT)

(13 STRANDS REQUIRED)

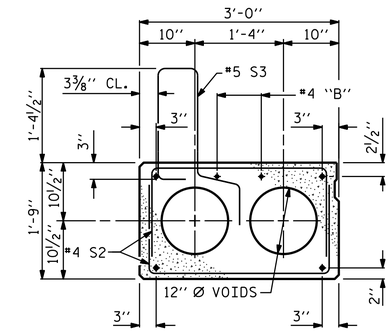

EXT. SLAB SECTION

(FOR PRESTRESSED STRAND LAYOUT, SEE INTERIOR SLAB SECTION.)

▲ BOND SHALL BE BROKEN ON THESE STRANDS FOR A DISTANCE OF 6'-0" FROM END OF CORED SLAB UNIT. SEE STANDARD SPECIFICATIONS, ARTICLE 1078-7.

◉ BOND SHALL BE BROKEN ON THESE STRANDS FOR A DISTANCE OF 2'-0" FROM END OF CORED SLAB UNIT. SEE STANDARD SPECIFICATIONS, ARTICLE 1078-7.

◉ OPTIONAL FULL LENGTH DEBONDED STRANDS. THESE STRANDS ARE NOT REQUIRED. IF THE FABRICATOR CHOOSES TO INCLUDE THESE STRANDS IN THE CORED SLAB UNIT, THE STRANDS SHALL BE DEBONDED FOR THE FULL LENGTH OF THE UNIT AT NO ADDITIONAL COST. SEE STANDARD SPECIFICATIONS, ARTICLE 1078-7.

DEBONDING LEGEND

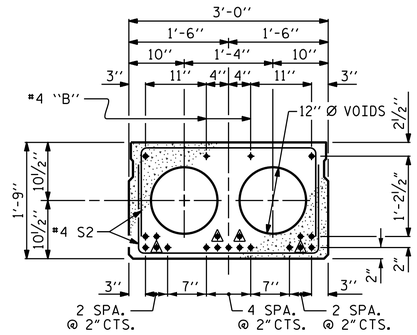

INTERIOR SLAB SECTION (50' UNIT)

(19 STRANDS REQUIRED)

0.6" Ø LOW RELAXATION STRAND LAYOUT

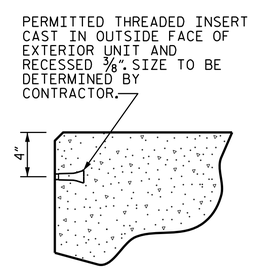

THREADED INSERT DETAIL

FIXED END

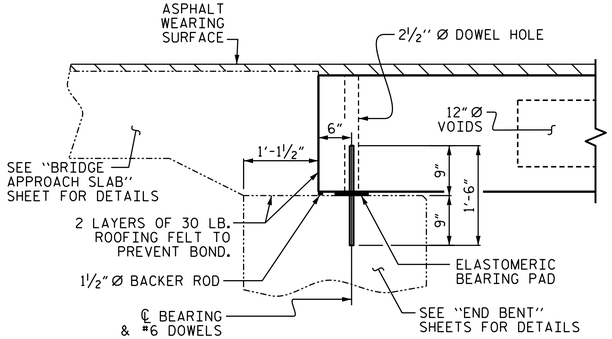

SECTION AT END BENT

FIXED END FIXED END

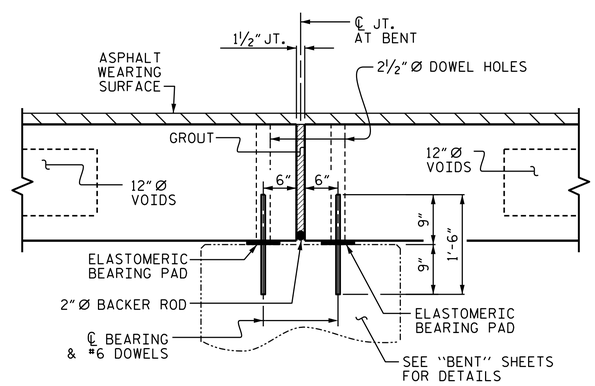

SECTION AT BENT

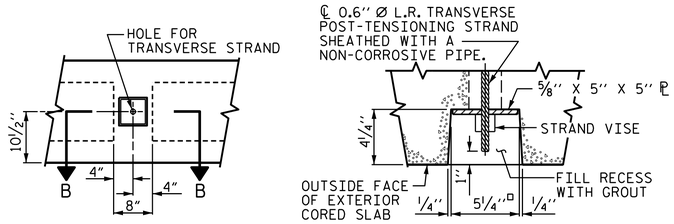

ELEVATION VIEW

SECTION B-B

GROUTED RECESS AT END OF POST-TENSIONED STRAND OF CORED SLABS

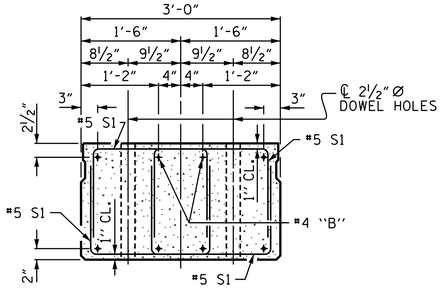

END ELEVATION

SHOWING PLACEMENT OF DOUBLE STIRRUPS AND LOCATION OF DOWEL HOLES. (STRAND LAYOUT NOT SHOWN.) INTERIOR SLAB UNIT SHOWN-EXTERIOR SLAB UNIT SIMILAR EXCEPT SHEAR KEY LOCATION.

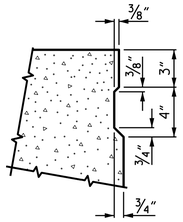

SHEAR KEY DETAIL

NOTE: OMIT SHEAR KEY ON OUTSIDE FACE OF EXTERIOR CORED SLABS.

PROJECT NO. B-4605
PITT COUNTY
STATION: 14+14.00 -L-

SHEET 1 OF 5

ASSEMBLED BY : CCC	DATE : 11/18		
CHECKED BY : MGC	DATE : 1/19		
DRAWN BY : DGE 5/09	REV. 9/14	MAA/TMG	
CHECKED BY : BCH 6/09			

NORTH CAROLINA PROFESSIONAL SEAL 20125 ENGINEER MARSHALL G. CHECK, JR.
Marshall G. Check, Jr.
5FBCC2F3A4DC413...
1/6/2020

DOCUMENT NOT CONSIDERED FINAL UNLESS ALL SIGNATURES COMPLETED
TGS ENGINEERS
706 HILLSBOROUGH STREET
SUITE 200
RALEIGH, NC 27603
PH (919) 773-8887
CORP. LICENSE NO.: C-0275

STATE OF NORTH CAROLINA
DEPARTMENT OF TRANSPORTATION
RALEIGH

STANDARD
3'-0" X 1'-9"
PRESTRESSED CONCRETE CORED SLAB UNIT
90° SKEW

REVISIONS								SHEET NO.
NO.	BY:	DATE:	NO.	BY:	DATE:			S-7
1			3					TOTAL SHEETS
2			4					22

STD. NO. 21" PCS2_33_90S

DocuSign Envelope ID: 040B0656-6ECB-493B-BF51-E17C974D607F

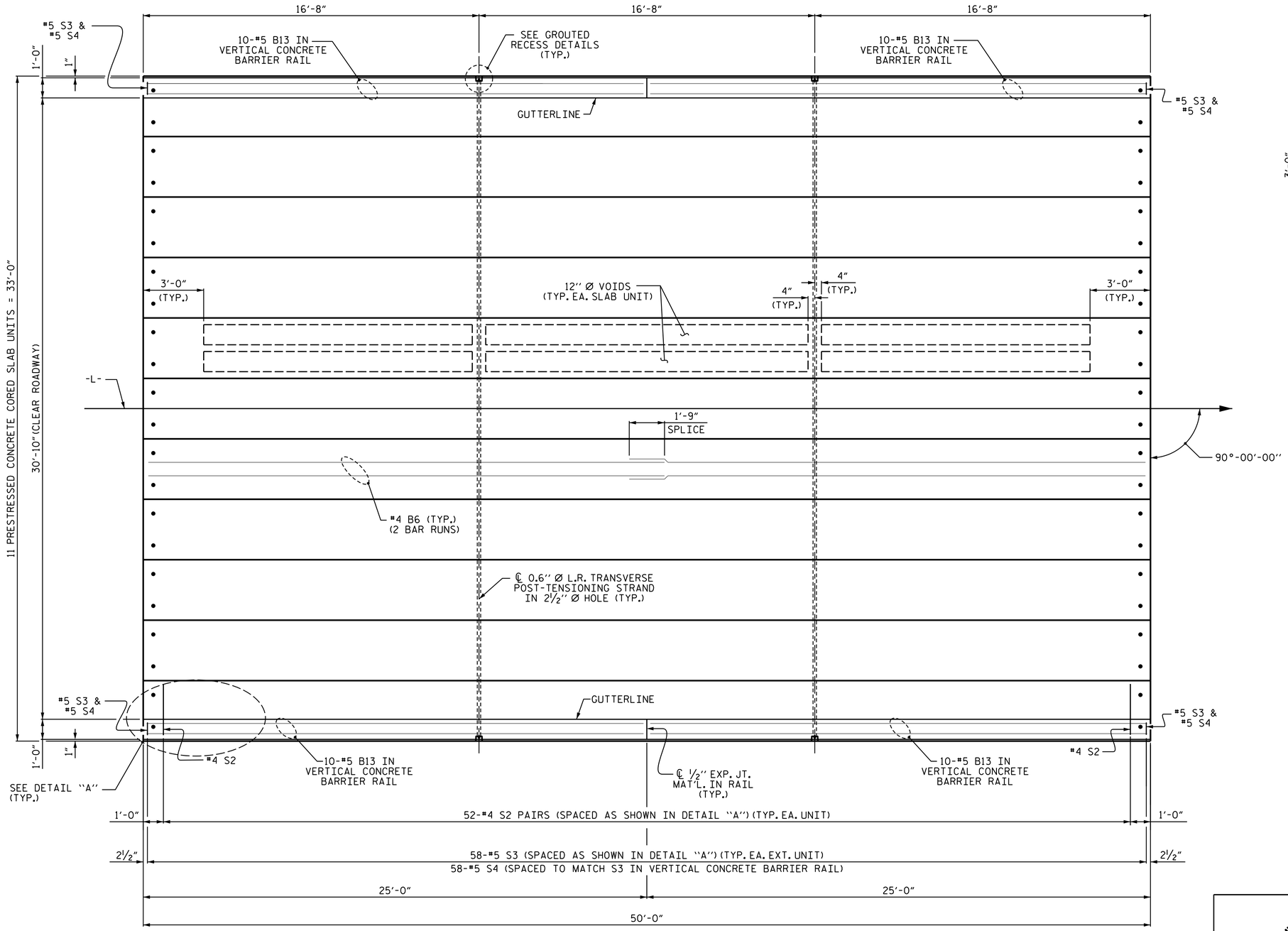

PLAN OF UNIT

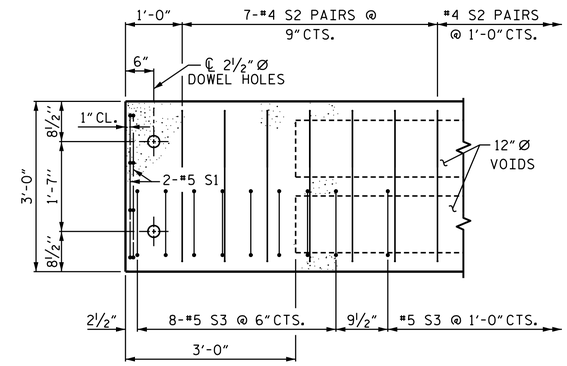

DETAIL "A"

(TYPICAL EACH END OF UNIT)
NOTE: EXTERIOR UNIT SHOWN - INTERIOR UNIT SIMILAR EXCEPT OMIT #5 S3 BARS.

PROJECT NO. B-4605
PITT COUNTY
STATION: 14+14.00 -L-

SHEET 2 OF 5

ASSEMBLED BY :	CCC	DATE :	11/18
CHECKED BY :	MGC	DATE :	1/19
DRAWN BY : DGE	3/09	REV. 12/5/11	MAA/AAC
CHECKED BY : BCH	3/09	REV. 8/14	MAA/TMG

NORTH CAROLINA PROFESSIONAL SEAL 20125 ENGINEER MARSHALL G. CHECK, JR.

DocuSigned by: Marshall G. Check Jr.
5FBCC2F3A4DC413...
1/6/2020

DOCUMENT NOT CONSIDERED FINAL UNLESS ALL SIGNATURES COMPLETED

TGS ENGINEERS
706 HILLSBOROUGH STREET
SUITE 200
RALEIGH, NC 27603
PH (919) 773-8887
CORP. LICENSE NO.: C-0275

STATE OF NORTH CAROLINA
DEPARTMENT OF TRANSPORTATION
RALEIGH

PLAN OF 50' UNIT
30'-10" CLEAR ROADWAY
90° SKEW

REVISIONS								
NO.	BY:	DATE:	NO.	BY:	DATE:	SHEET NO.	S-8
1			3			TOTAL SHEETS	22
2			4				

STD. NO. 21" PCS_33_90S_50L

DocuSign Envelope ID: 040B0656-6ECB-493B-BF51-E17C974D607F

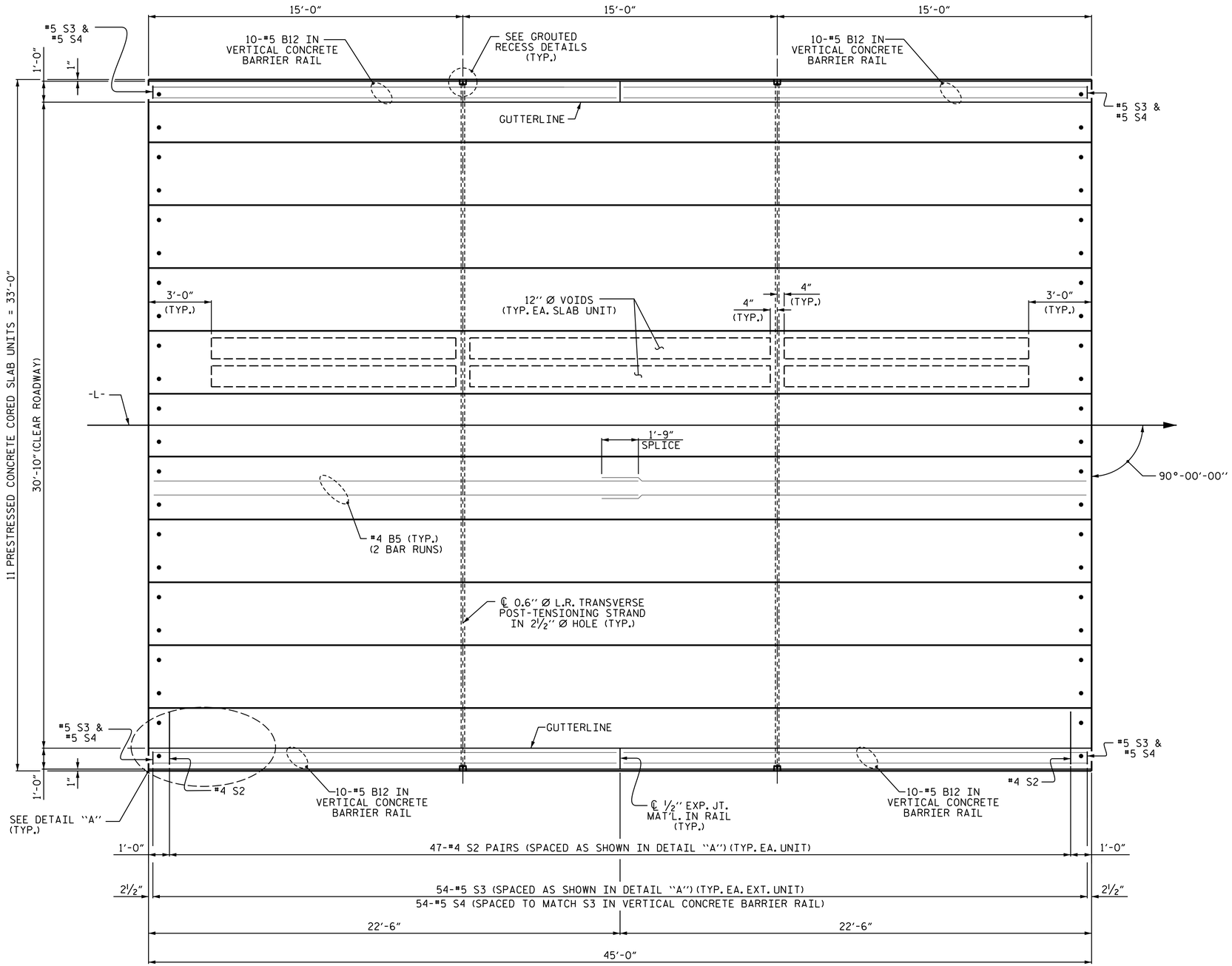

PLAN OF UNIT

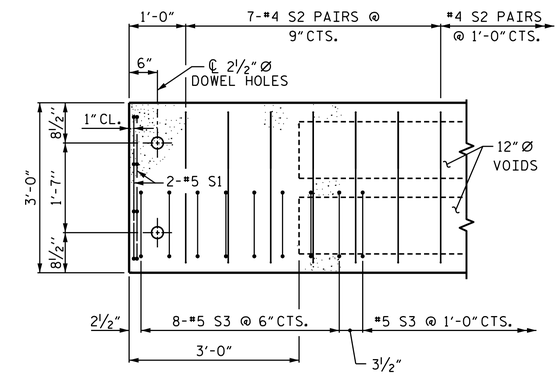

DETAIL "A"

(TYPICAL EACH END OF UNIT)
NOTE: EXTERIOR UNIT SHOWN - INTERIOR UNIT SIMILAR EXCEPT OMIT #5 S3 BARS.

PROJECT NO. B-4605
PITT COUNTY
STATION: 14+14.00 -L-

SHEET 3 OF 5

ASSEMBLED BY :	CCC	DATE :	11/18
CHECKED BY :	MGC	DATE :	1/19
DRAWN BY : DGE	3/09	REV. 12/5/11	MAA/AAC
CHECKED BY : BCH	3/09	REV. 8/14	MAA/TMG

NORTH CAROLINA PROFESSIONAL SEAL 20125 ENGINEER MARSHALL G. CHECK, JR.

DocuSigned by: Marshall G. Check, Jr.
5FBCC2F3A4DC413...
1/6/2020

DOCUMENT NOT CONSIDERED FINAL UNLESS ALL SIGNATURES COMPLETED

TGS ENGINEERS
706 HILLSBOROUGH STREET
SUITE 200
RALEIGH, NC 27603
PH (919) 773-8887
CORP. LICENSE NO.: C-0275

STATE OF NORTH CAROLINA
DEPARTMENT OF TRANSPORTATION
RALEIGH

PLAN OF 45' UNIT
30'-10" CLEAR ROADWAY
90° SKEW

REVISIONS						
NO.	BY:	DATE:	NO.	BY:	DATE:	
1			3			
2			4			

SHEET NO. S-9
TOTAL SHEETS 22

STD. NO. 21" PCS_33_90S_45L

DocuSign Envelope ID: 040B0656-6ECB-493B-BF51-E17C974D607F

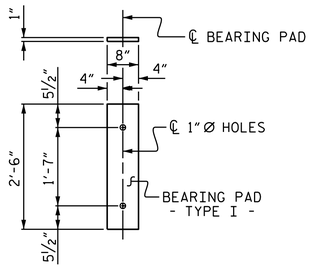

FIXED END
(TYPE I - 66 REQ'D)

ELASTOMERIC BEARING DETAILS

ELASTOMER IN ALL BEARINGS SHALL BE 50 DUROMETER HARDNESS.

GRADE 270 STRANDS

	0.6"Ø L.R.
AREA (SQUARE INCHES)	0.217
ULTIMATE STRENGTH (LBS. PER STRAND)	58,600
APPLIED PRESTRESS (LBS. PER STRAND)	43,950

CORED SLABS REQUIRED

	NUMBER	LENGTH	TOTAL LENGTH
45' UNIT			
EXTERIOR C.S.	4	45'-0"	180'-0"
INTERIOR C.S.	18	45'-0"	810'-0"
TOTAL	22		990'-0"

CORED SLABS REQUIRED

	NUMBER	LENGTH	TOTAL LENGTH
50' UNIT			
EXTERIOR C.S.	2	50'-0"	100'-0"
INTERIOR C.S.	9	50'-0"	450'-0"
TOTAL	11		550'-0"

CONCRETE RELEASE STRENGTH

UNIT	PSI
45' UNITS	4000
50' UNITS	4900

BAR TYPES

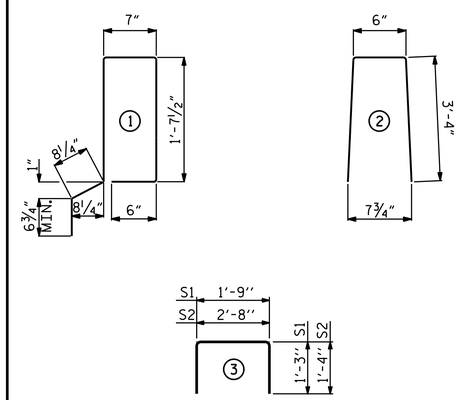

ALL BAR DIMENSIONS ARE OUT TO OUT

DEAD LOAD DEFLECTION AND CAMBER

	3'-0" x 1'-9"
45' CORED SLAB UNIT	0.6"Ø L.R. STRAND
CAMBER (SLAB ALONE IN PLACE)	⅞" ↑
DEFLECTION DUE TO SUPERIMPOSED DEAD LOAD**	⅛" ↓
FINAL CAMBER	¾" ↑

** INCLUDES FUTURE WEARING SURFACE

DEAD LOAD DEFLECTION AND CAMBER

	3'-0" x 1'-9"
50' CORED SLAB UNIT	0.6"Ø L.R. STRAND
CAMBER (SLAB ALONE IN PLACE)	1½" ↑
DEFLECTION DUE TO SUPERIMPOSED DEAD LOAD**	⅜" ↓
FINAL CAMBER	1⅛" ↑

** INCLUDES FUTURE WEARING SURFACE

NOTES

ALL PRESTRESSING STRANDS SHALL BE 7-WIRE LOW RELAXATION GRADE 270 STRANDS AND SHALL CONFORM TO AASHTO M203 EXCEPT FOR SAMPLING REQUIREMENTS WHICH SHALL BE IN ACCORDANCE WITH THE STANDARD SPECIFICATIONS.

ALL REINFORCING STEEL CAST WITH THE CORED SLAB SECTIONS SHALL BE GRADE 60 AND SHALL BE INCLUDED IN THE UNIT PRICE BID FOR PRESTRESSED CONCRETE CORED SLABS.

RECESSES FOR TRANSVERSE STRANDS SHALL BE GROUTED AFTER THE TENSIONING OF THE STRANDS.

THE 2½"Ø DOWEL HOLES AT FIXED ENDS OF SLAB SECTIONS SHALL BE FILLED WITH NON-SHRINK GROUT.

THE BACKER RODS SHALL CONFORM TO THE REQUIREMENTS OF TYPE M BOND BREAKER. SEE SECTION 1028 OF THE STANDARD SPECIFICATIONS.

WHEN CORED SLABS ARE CAST, AN INTERNAL HOLD-DOWN SYSTEM SHALL BE EMPLOYED TO PREVENT VOIDS FROM RISING OR MOVING SIDEWAYS. AT LEAST SIX WEEKS PRIOR TO CASTING CORED SLABS, THE CONTRACTOR SHALL SUBMIT TO THE ENGINEER FOR REVIEW AND COMMENT, DETAILED DRAWINGS OF THE PROPOSED HOLD-DOWN SYSTEM. IN ADDITION TO STRUCTURAL DETAILS, LOCATION AND SPACING OF THE HOLD-DOWNS SHALL BE INDICATED.

ALL REINFORCING STEEL IN THE VERTICAL CONCRETE BARRIER RAIL SHALL BE EPOXY COATED.

PRESTRESSING STRANDS SHALL BE CUT FLUSH WITH THE CORED SLAB UNIT ENDS.

APPLY EPOXY PROTECTIVE COATING TO CORED SLAB UNIT ENDS.

GROOVED CONTRACTION JOINTS, ½" IN DEPTH, SHALL BE TOOLED IN ALL EXPOSED FACES OF THE BARRIER RAIL AND IN ACCORDANCE WITH ARTICLE 825-10(B) OF THE STANDARD SPECIFICATIONS. A CONTRACTION JOINT SHALL BE LOCATED AT EACH THIRD POINT BETWEEN BARRIER RAIL EXPANSION JOINTS. ONLY ONE CONTRACTION JOINT IS REQUIRED AT MIDPOINT OF BARRIER RAIL SEGMENTS LESS THAN 20 FEET IN LENGTH AND NO CONTRACTION JOINTS ARE REQUIRED FOR THOSE SEGMENTS LESS THAN 10 FEET IN LENGTH.

FLAME CUTTING OF THE TRANSVERSE POST-TENSIONING STRAND IS NOT ALLOWED.

THE TRANSFER OF LOAD FROM THE ANCHORAGES TO THE CORED SLAB UNIT SHALL BE DONE WHEN THE CONCRETE HAS REACHED A COMPRESSIVE STRENGTH OF NOT LESS THAN THE REQUIRED STRENGTH SHOWN IN THE "CONCRETE RELEASE STRENGTH" TABLE.

FOR GROUT FOR STRUCTURES, SEE SPECIAL PROVISIONS.

THE PERMITTED THREADED INSERTS ARE DETAILED AS AN OPTION FOR THE CONTRACTOR TO ATTACH FALSEWORK AND FORMWORK DURING CONSTRUCTION.

THE PERMITTED THREADED INSERTS IN THE EXTERIOR UNITS SHALL BE SIZED BY THE CONTRACTOR, SPACED AT 4'-0" CENTERS AND GALVANIZED IN ACCORDANCE WITH SECTION 1076 OF THE STANDARD SPECIFICATIONS. STAINLESS STEEL THREADED INSERTS MAY BE USED AS AN ALTERNATE.

THE PERMITTED THREADED INSERTS SHALL BE GROUTED BY THE CONTRACTOR IMMEDIATELY FOLLOWING REMOVAL OF THE FALSEWORK.

THE COST OF THE PERMITTED THREADED INSERTS SHALL BE INCLUDED IN THE PRICE BID FOR THE PRECAST UNITS.

BILL OF MATERIAL FOR ONE 45' CORED SLAB UNIT

				EXTERIOR UNIT		INTERIOR UNIT	
BAR	NUMBER	SIZE	TYPE	LENGTH	WEIGHT	LENGTH	WEIGHT
B5	4	#4	STR	23'-3"	62	23'-3"	62
S1	8	#5	3	4'-3"	35	4'-3"	35
S2	94	#4	3	5'-4"	335	5'-4"	335
* S3	54	#5	1	5'-7"	314		
REINFORCING STEEL			LBS.		432		432
* EPOXY COATED REINFORCING STEEL			LBS.		314		
5000 P.S.I. CONCRETE			CU. YDS.		6.5		6.5
0.6"Ø L.R. STRANDS			No.		13		13

BILL OF MATERIAL FOR ONE 50' CORED SLAB UNIT

				EXTERIOR UNIT		INTERIOR UNIT	
BAR	NUMBER	SIZE	TYPE	LENGTH	WEIGHT	LENGTH	WEIGHT
B6	4	#4	STR	25'-9"	69	25'-9"	69
S1	8	#5	3	4'-3"	35	4'-3"	35
S2	104	#4	3	5'-4"	371	5'-4"	371
* S3	58	#5	1	5'-7"	338		
REINFORCING STEEL			LBS.		475		475
* EPOXY COATED REINFORCING STEEL			LBS.		338		
6500 P.S.I. CONCRETE			CU. YDS.		7.1		7.1
0.6"Ø L.R. STRANDS			No.		19		19

GUTTERLINE ASPHALT THICKNESS & RAIL HEIGHT

	ASPHALT OVERLAY THICKNESS	RAIL HEIGHT
	@ MID-SPAN	@ MID-SPAN
45' UNITS	2"	3'-8"
50' UNITS	1⅝"	3'-7⅝"

BILL OF MATERIAL FOR VERTICAL CONCRETE BARRIER RAIL

BAR	BARS PER PAIR OF EXTERIOR UNITS		TOTAL NO.	SIZE	TYPE	LENGTH	WEIGHT
	50' UNIT	45' UNIT					
*B12		40	80	#5	STR	22'-1"	1843
*B13	40		40	#5	STR	24'-7"	1026
* S4	116	108	332	#5	2	7'-2"	2482
* EPOXY COATED REINFORCING STEEL					LBS.		5351
CLASS AA CONCRETE					CU.YDS.		35.8
TOTAL VERTICAL CONCRETE BARRIER RAIL					LN. FT.		280.50

PROJECT NO. B-4605
PITT COUNTY
STATION: 14+14.00 -L-

SHEET 4 OF 5

ASSEMBLED BY : CCC	DATE : 11/18		
CHECKED BY : MGC	DATE : 1/19		
DRAWN BY : DGE 5/09	REV. 5/18	MAA/THC	
CHECKED BY : BCH 6/09			

NORTH CAROLINA PROFESSIONAL SEAL 20125 ENGINEER MARSHALL G. CHEEK, JR.
DocuSigned by: Marshall G. Cheek, Jr.
5FBCC2F3A4DC413...
1/6/2020

DOCUMENT NOT CONSIDERED FINAL UNLESS ALL SIGNATURES COMPLETED

TGS ENGINEERS
706 HILLSBOROUGH STREET
SUITE 200
RALEIGH, NC 27603
PH (919) 773-8887
CORP. LICENSE NO.: C-0275

STATE OF NORTH CAROLINA
DEPARTMENT OF TRANSPORTATION
RALEIGH

STANDARD
3'-0" X 1'-9"
PRESTRESSED CONCRETE
CORED SLAB UNIT
90° SKEW

REVISIONS						SHEET NO.
NO.	BY:	DATE:	NO.	BY:	DATE:	S-10
1			3			TOTAL SHEETS
2			4			22

STD. NO. 21"PCS3_33_90S

DocuSign Envelope ID: 040B0656-6ECB-493B-BF51-E17C974D607F

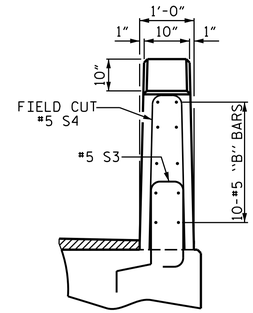

END VIEW

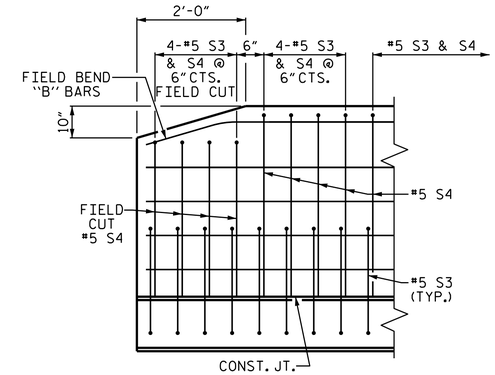

SIDE VIEW

END OF RAIL DETAILS

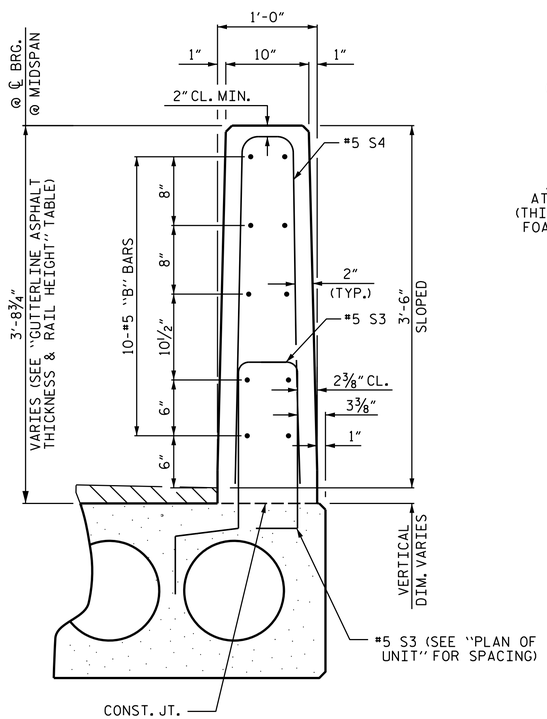

VERTICAL CONCRETE BARRIER RAIL SECTION

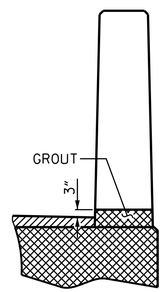

SECTION T-T

AT OPEN JOINT AT BENT
(THIS IS TO BE USED WHERE
FOAM JOINT IS NOT USED)

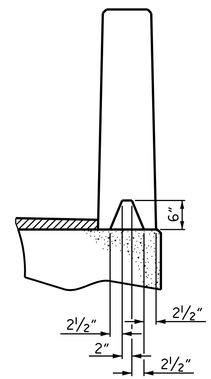

SECTION S-S

AT DAM IN OPEN JOINT
(THIS IS TO BE USED ONLY
WHEN SLIP FORM IS USED)

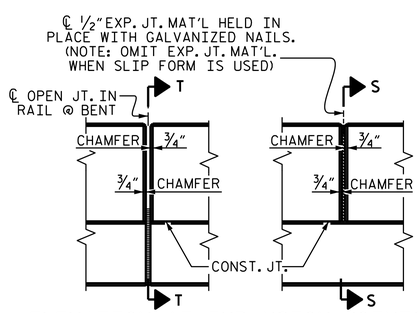

ELEVATION AT EXPANSION JOINTS

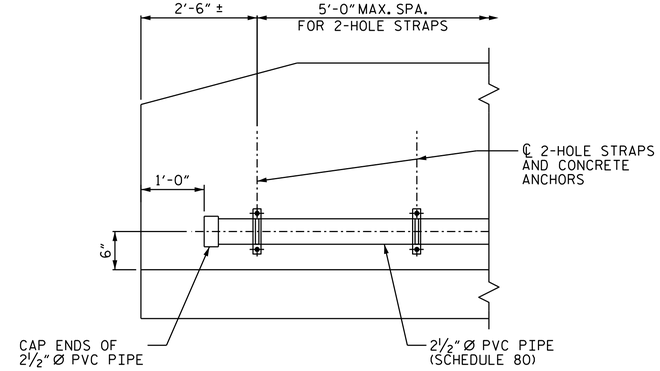

ELEVATION

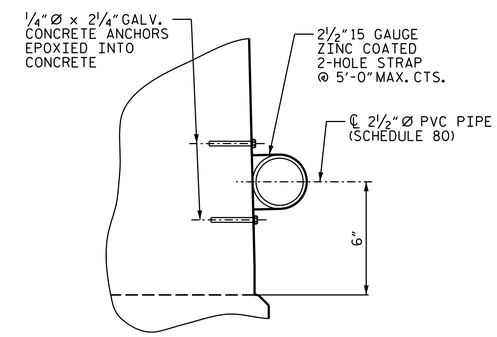

SECTION

FIBER OPTIC CONDUIT SYSTEM DETAILS

2½" Ø SCHEDULE 80 PVC PIPE ATTACHED TO THE
BACK OF BOTH RAILS FOR FUTURE FIBER OPTIC CABLE.

PROJECT NO. B-4605

PITT COUNTY

STATION: 14+14.00 -L-

SHEET 5 OF 5

ASSEMBLED BY :	CCC	DATE :	11/18
CHECKED BY :	MGC	DATE :	1/19
DRAWN BY : DGE 5/09	REV. 1/15	MAA/TMG	
CHECKED BY : BCH 6/09			

NORTH CAROLINA PROFESSIONAL SEAL 20125 ENGINEER MARSHALL G. CHEEK, JR.

DocuSigned by: Marshall G. Cheek, Jr.
5FBCC2F3A4DC413...

1/6/2020

DOCUMENT NOT CONSIDERED FINAL
UNLESS ALL SIGNATURES COMPLETED

TGS ENGINEERS
706 HILLSBOROUGH STREET
SUITE 200
RALEIGH, NC 27603
PH (919) 773-8887
CORP. LICENSE NO.: C-0275

STATE OF NORTH CAROLINA
DEPARTMENT OF TRANSPORTATION
RALEIGH

3'-0" X 1'-9" PRESTRESSED CONCRETE CORED SLAB UNIT 90° SKEW

REVISIONS								SHEET NO.
NO.	BY:	DATE:	NO.	BY:	DATE:			S-11
1			3					TOTAL SHEETS
2			4					22

DocuSign Envelope ID: 040B0656-6ECB-493B-BF51-E17C974D607F

SKETCH SHOWING POINTS OF ATTACHMENT

✳ DENOTES GUARDRAIL ANCHOR ASSEMBLY

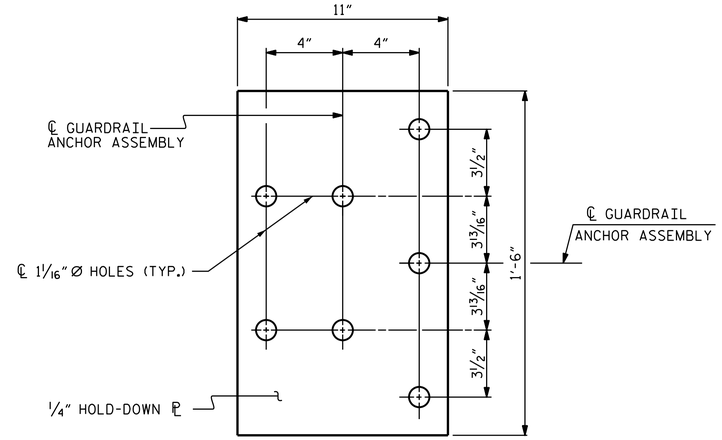

PLAN

NOTES

THE GUARDRAIL ANCHOR ASSEMBLY SHALL CONSIST OF A 1/4" HOLD DOWN PLATE AND 7 - 7/8" Ø BOLTS WITH NUTS AND WASHERS.

THE HOLD-DOWN PLATE SHALL CONFORM TO AASHTO M270 GRADE 36. AFTER FABRICATION, THE HOLD-DOWN PLATE SHALL BE HOT-DIP GALVANIZED IN ACCORDANCE WITH AASHTO M111.

BOLTS SHALL CONFORM TO THE REQUIREMENTS OF ASTM A307 AND NUTS SHALL CONFORM TO THE REQUIREMENTS OF AASHTO M291. BOLTS, NUTS AND WASHERS SHALL BE GALVANIZED. (AT THE CONTRACTOR'S OPTION, STAINLESS STEEL BOLTS, NUTS AND WASHERS MAY BE USED AS AN ALTERNATE FOR THE 7/8" Ø GALVANIZED BOLTS, NUTS AND WASHERS. THEY SHALL CONFORM TO OR EXCEED THE MECHANICAL REQUIREMENTS OF ASTM A307. THE USE OF THIS ALTERNATE SHALL BE APPROVED BY THE ENGINEER.)

THE GUARDRAIL ANCHOR ASSEMBLY IS REQUIRED AT ALL POINTS WHERE APPROACH GUARDRAIL IS TO BE ATTACHED TO THE END OF BARRIER RAIL. FOR POINTS OF ATTACHMENT, SEE SKETCH.

AFTER INSTALLATION, THE EXPOSED THREAD OF THE BOLT SHALL BE BURRED WITH A SHARP POINTED TOOL.

THE COST OF THE GUARDRAIL ANCHOR ASSEMBLY SHALL BE INCLUDED IN THE UNIT CONTRACT PRICE BID FOR VERTICAL CONCRETE BARRIER RAIL.

THE VERTICAL REINFORCING BARS MAY BE SHIFTED SLIGHTLY IN THE VERTICAL CONCRETE BARRIER RAIL TO CLEAR ASSEMBLY BOLTS.

THE 1 1/4" Ø HOLES SHALL BE FORMED OR DRILLED WITH A CORE BIT. IMPACT TOOLS WILL NOT BE PERMITTED. ANY CONCRETE DAMAGED BY THIS WORK SHALL BE REPAIRED TO THE SATISFACTION OF THE ENGINEER.

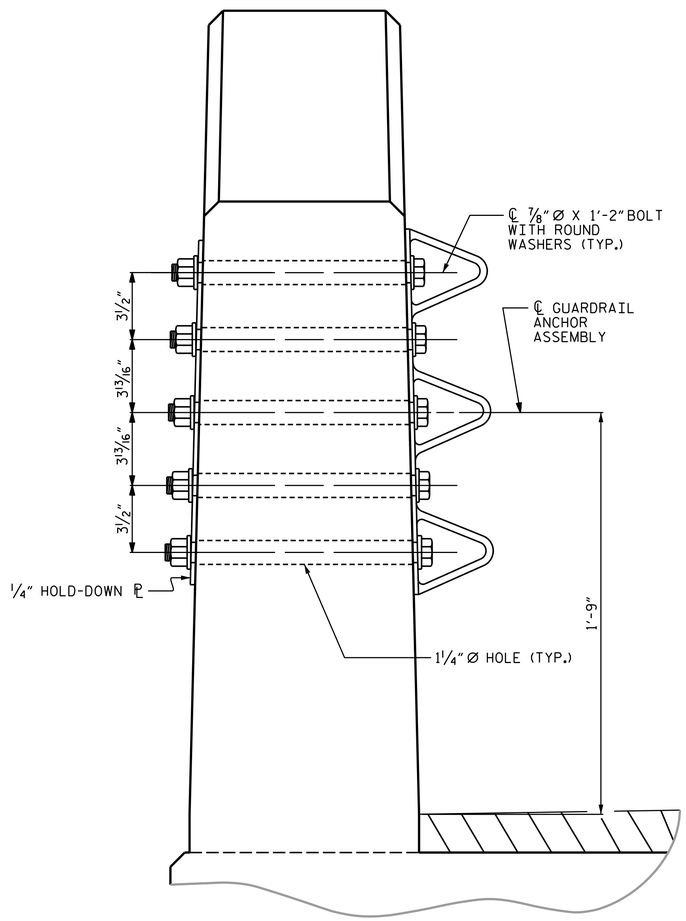

SECTION E-E

GUARDRAIL ANCHOR ASSEMBLY DETAILS

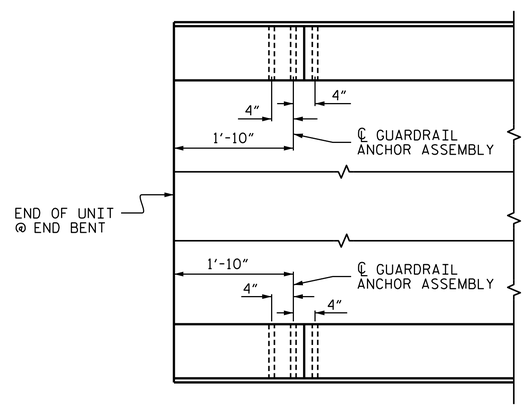

PLAN

LOCATION OF ANCHORS FOR GUARDRAIL

END BENT #1 SHOWN, END BENT #2 SIMILAR.

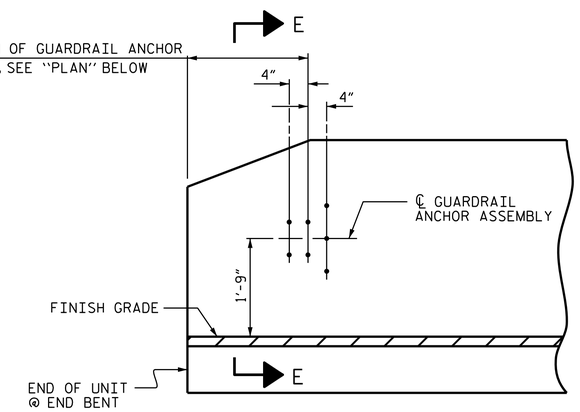

ELEVATION

PROJECT NO. B-4605

PITT COUNTY

STATION: 14+14.00 -L-

ASSEMBLED BY :	CCC	DATE :	11/18
CHECKED BY :	MGC	DATE :	1/19
DRAWN BY : MAA	5/10	REV. 1/15	MAA/TMG
CHECKED BY : GM	5/10	REV. 12/17	MAA/THC
		REV. 5/18	MAA/THC

NORTH CAROLINA PROFESSIONAL SEAL 20125 ENGINEER MARSHALL G. CHEEK, JR.

Marshall G. Cheek, Jr.

SFBCC2F3A4DC413...

1/6/2020

DOCUMENT NOT CONSIDERED FINAL UNLESS ALL SIGNATURES COMPLETED

TGS ENGINEERS
706 HILLSBOROUGH STREET
SUITE 200
RALEIGH, NC 27603
PH (919) 773-8887
CORP. LICENSE NO.: C-0275

STATE OF NORTH CAROLINA
DEPARTMENT OF TRANSPORTATION
RALEIGH

STANDARD
GUARDRAIL ANCHORAGE DETAILS
FOR VERTICAL CONCRETE BARRIER RAIL

REVISIONS						
NO.	BY:	DATE:	NO.	BY:	DATE:	
1			3			
2			4			

SHEET NO. S-12

TOTAL SHEETS 22

(SHT 1) STD. NO. GRA3

DocuSign Envelope ID: 040B0656-6ECB-493B-BF51-E17C974D607F

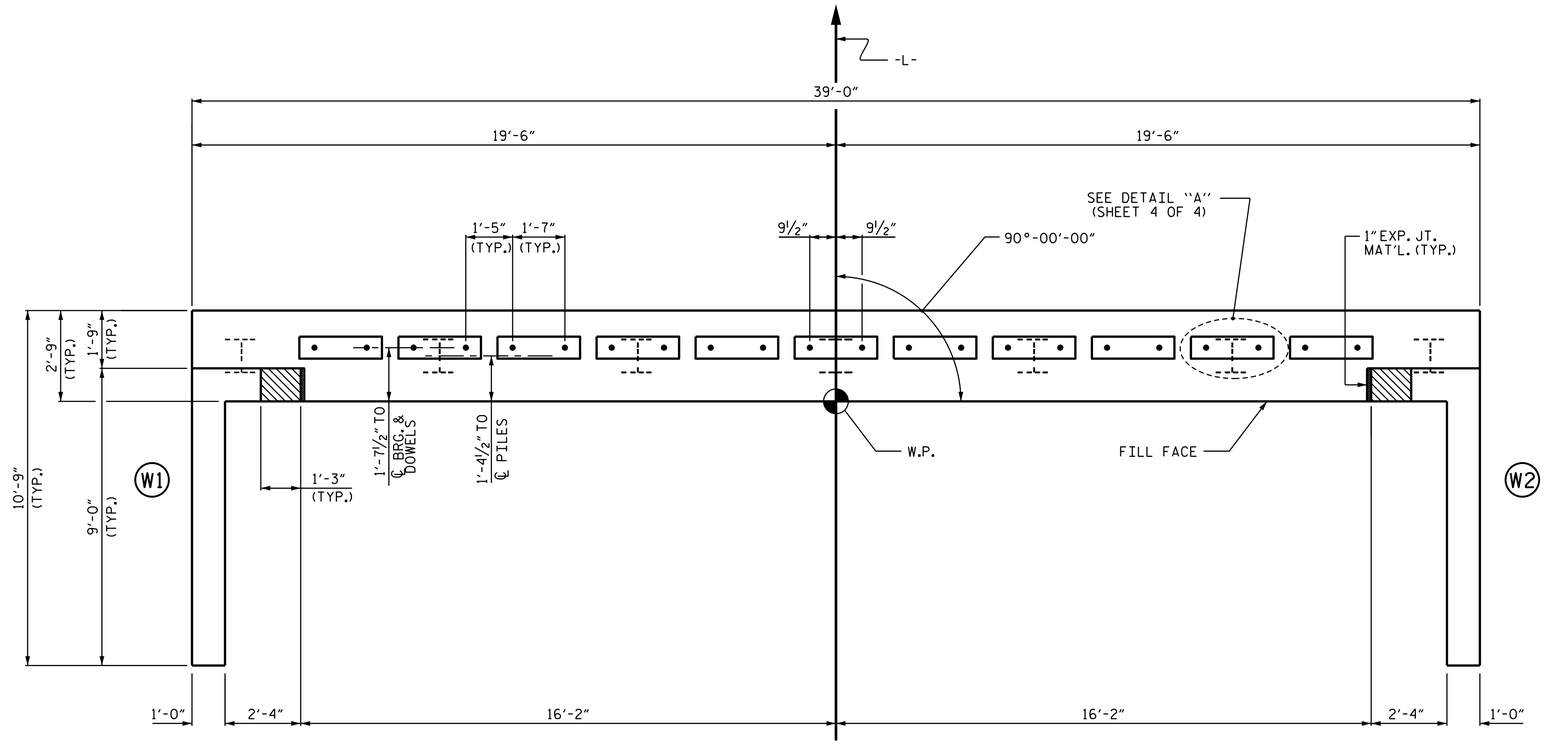

PLAN

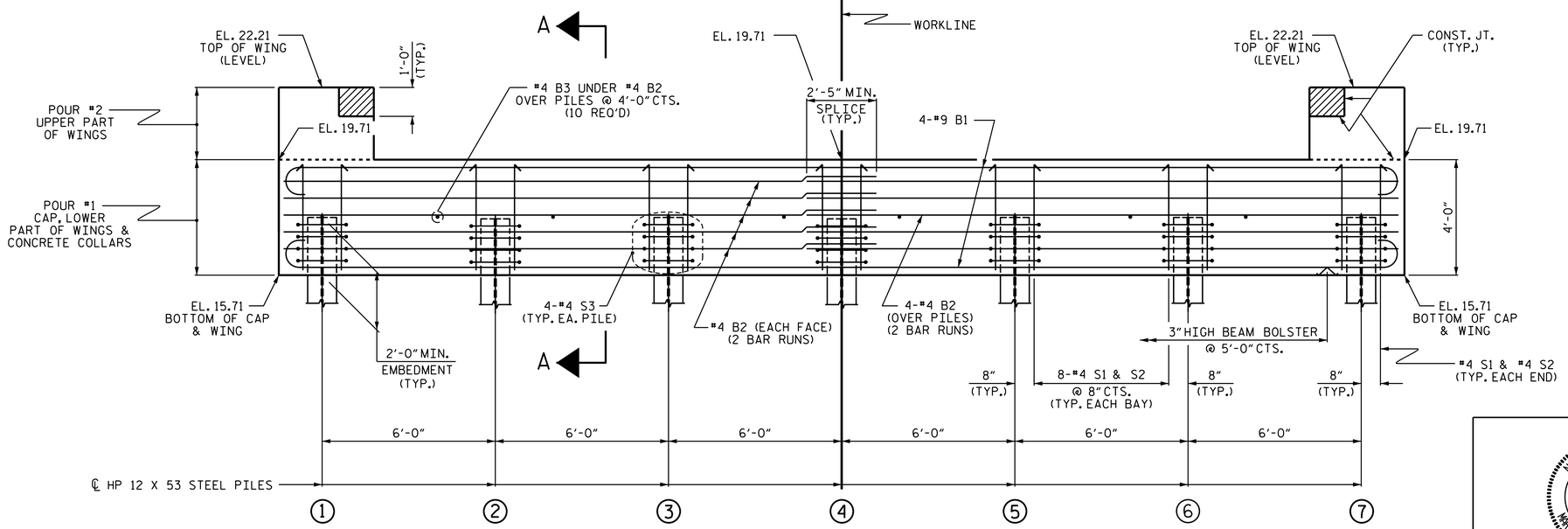

ELEVATION

WINGS NOT SHOWN FOR CLARITY.
FOR SECTION A-A, SEE SHEET 4 OF 4.
CONCRETE COLLARS FOR STEEL PILES NOT SHOWN IN PLAN AND ELEVATION VIEWS FOR CLARITY.
SEE "CORROSION PROTECTION FOR STEEL PILES DETAIL", SHEET 4 OF 4.

NOTES

STIRRUPS IN CAP MAY BE SHIFTED AS NECESSARY TO CLEAR DOWELS.

THE CONCRETE IN THE SHADED AREA OF THE WING SHALL BE POURED AFTER THE VERTICAL CONCRETE BARRIER RAIL IS CAST IF SLIP FORMING IS USED.

FOR PILE SPLICE DETAILS, SEE SHEET 4 OF 4.

FOR WING DETAILS, SEE SHEET 3 OF 4.

PROJECT NO. B-4605
PITT COUNTY
STATION: 14+14.00 -L-

SHEET 1 OF 4

ASSEMBLED BY : CCC	DATE : 11/18		
CHECKED BY : MGC	DATE : 1/19		
DRAWN BY : WJH 12/11	REV. 4/15	MAA/TMG	
CHECKED BY : AAC 12/11			

NORTH CAROLINA PROFESSIONAL SEAL 20125 ENGINEER MARSHALL G. CHECK, JR.
Marshall G. Check Jr.
5FBCC2F3A4DC413...
1/6/2020

DOCUMENT NOT CONSIDERED FINAL UNLESS ALL SIGNATURES COMPLETED

TGS ENGINEERS
706 HILLSBOROUGH STREET
SUITE 200
RALEIGH, NC 27603
PH (919) 773-8887
CORP. LICENSE NO.: C-0275

STATE OF NORTH CAROLINA
DEPARTMENT OF TRANSPORTATION
RALEIGH

SUBSTRUCTURE

END BENT No. 1

REVISIONS						
NO.	BY:	DATE:	NO.	BY:	DATE:	
1			3			
2			4			

SHEET NO. S-13
TOTAL SHEETS 22

STD. NO. EB_33_90S4

DocuSign Envelope ID: 040B0656-6ECB-493B-BF51-E17C974D607F

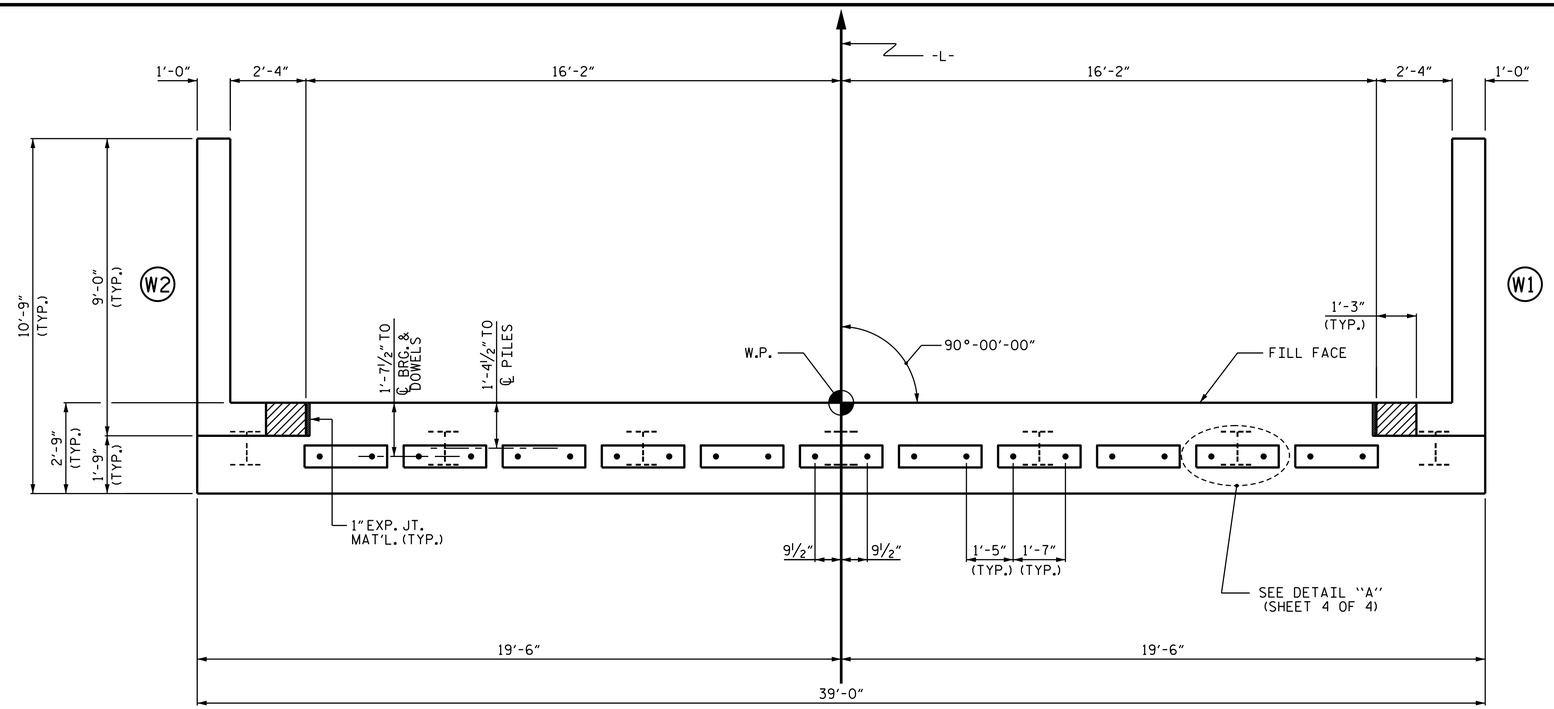

PLAN

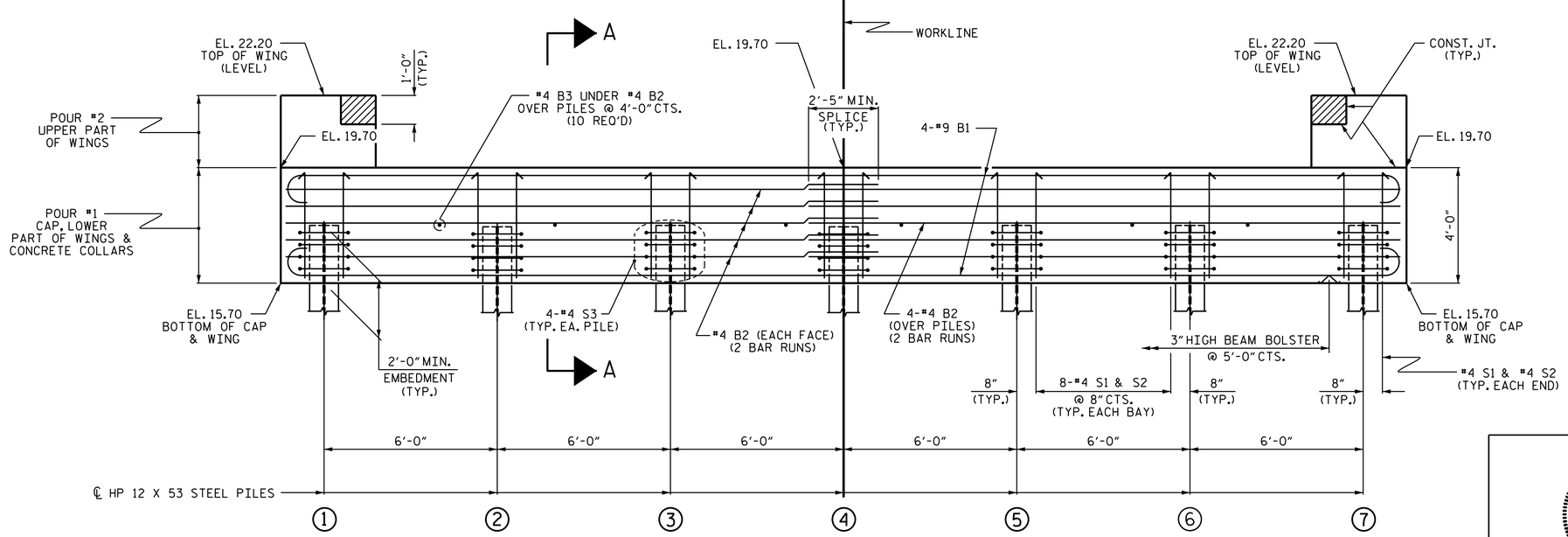

ELEVATION

WINGS NOT SHOWN FOR CLARITY.
FOR SECTION A-A, SEE SHEET 4 OF 4.
CONCRETE COLLARS FOR STEEL PILES NOT SHOWN IN PLAN AND ELEVATION VIEWS FOR CLARITY.
SEE "CORROSION PROTECTION FOR STEEL PILES DETAIL", SHEET 4 OF 4.

NOTES

STIRRUPS IN CAP MAY BE SHIFTED AS NECESSARY TO CLEAR DOWELS.

THE CONCRETE IN THE SHADED AREA OF THE WING SHALL BE POURED AFTER THE VERTICAL CONCRETE BARRIER RAIL IS CAST IF SLIP FORMING IS USED.

FOR PILE SPLICE DETAILS, SEE SHEET 4 OF 4.

FOR WING DETAILS, SEE SHEET 3 OF 4.

PROJECT NO. B-4605
PITT COUNTY
STATION: 14+14.00 -L-

SHEET 2 OF 4

ASSEMBLED BY : CCC	DATE : 11/18		
CHECKED BY : MGC	DATE : 1/19		
DRAWN BY : WJH 12/11	REV. 4/15	MAA/TMG	
CHECKED BY : AAC 12/11			

NORTH CAROLINA PROFESSIONAL SEAL 20125 ENGINEER MARSHALL G. CHECKY, JR.
DocuSigned by: Marshall G. Checky, Jr.
5FBCC2F3A4DC413...
1/6/2020

DOCUMENT NOT CONSIDERED FINAL UNLESS ALL SIGNATURES COMPLETED

TGS ENGINEERS
706 HILLSBOROUGH STREET
SUITE 200
RALEIGH, NC 27603
PH (919) 773-8887
CORP. LICENSE NO.: C-0275

STATE OF NORTH CAROLINA
DEPARTMENT OF TRANSPORTATION
RALEIGH

SUBSTRUCTURE

END BENT No. 2

REVISIONS								
NO.	BY:	DATE:	NO.	BY:	DATE:	SHEET NO. S-14
1			3			TOTAL SHEETS 22
2			4			

STD. NO. EB_33_90S4

DocuSign Envelope ID: 040B0656-6ECB-493B-BF51-E17C974D607F

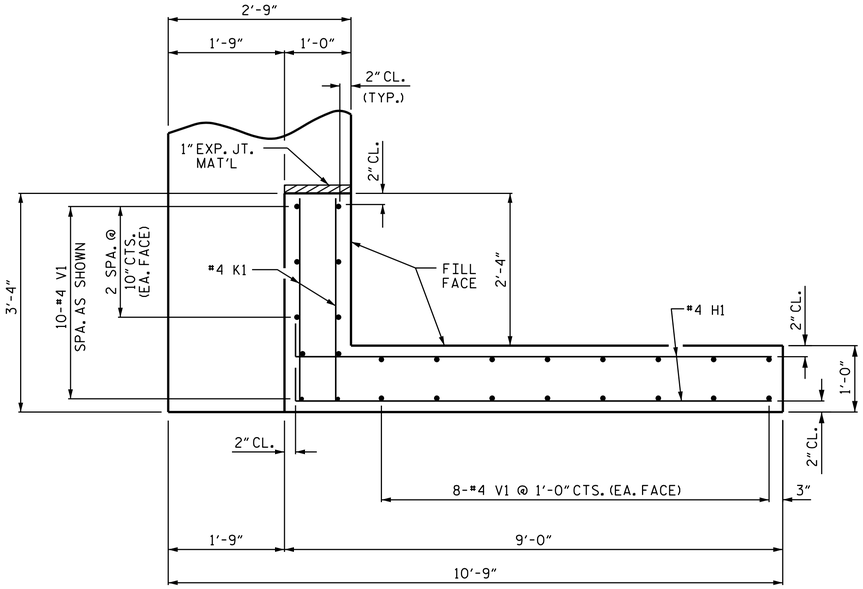

PLAN OF WING (W1)

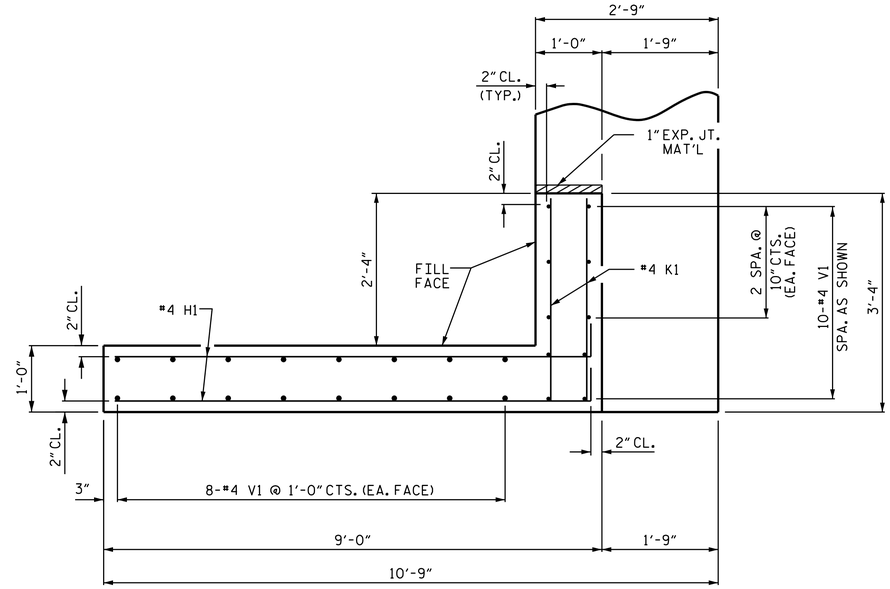

PLAN OF WING (W2)

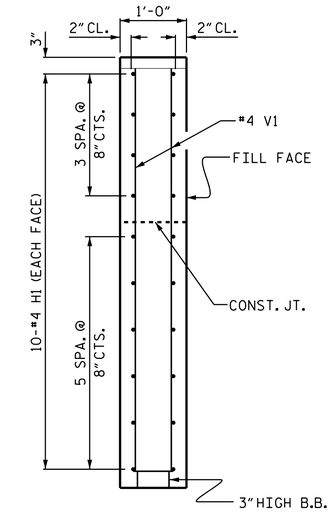

SECTION X-X

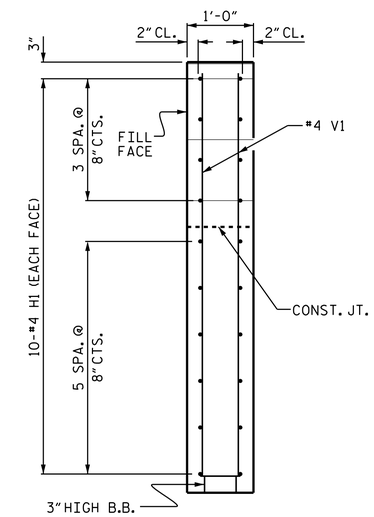

SECTION Y-Y

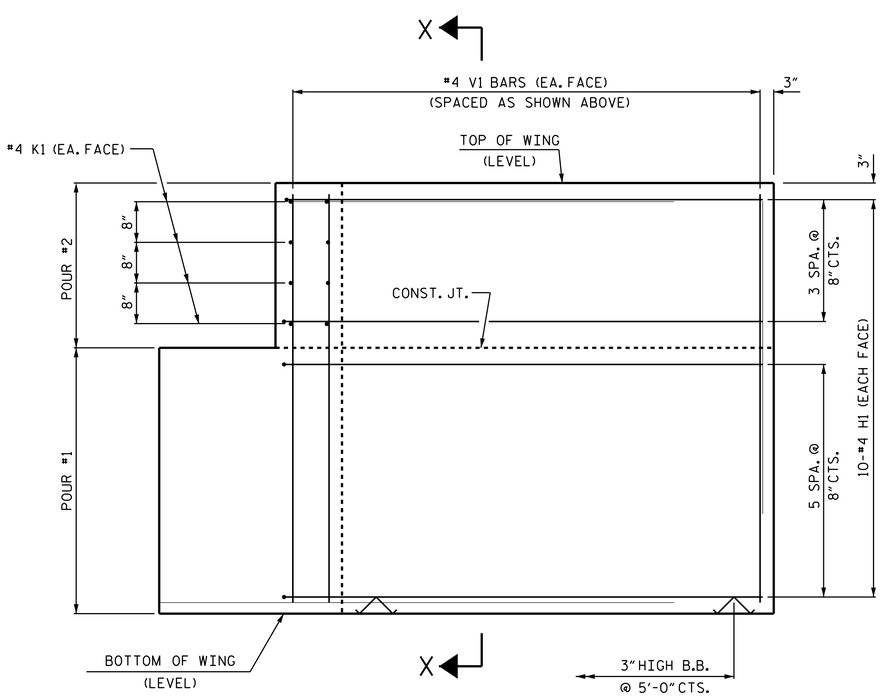

ELEVATION OF WING (W1)

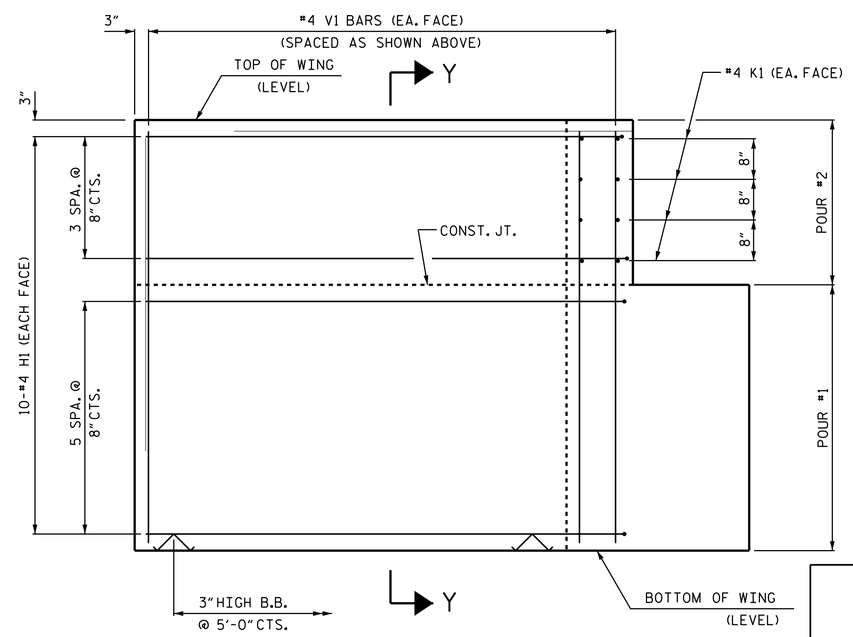

ELEVATION OF WING (W2)

WING DETAILS

PROJECT NO. B-4605

PITT COUNTY

STATION: 14+14.00 -L-

SHEET 3 OF 4

ASSEMBLED BY :	CCC	DATE :	11/18
CHECKED BY :	MGC	DATE :	1/19
DRAWN BY : WJH	12/11	REV. 4/15	MAA/TMG
CHECKED BY : AAC	12/11		

NORTH CAROLINA PROFESSIONAL SEAL 20125 ENGINEER MARSHALL D. CHEEK, JR.

DocuSigned by: Marshall D. Cheek Jr. 5FBCC2F3A4DC413... 1/6/2020

DOCUMENT NOT CONSIDERED FINAL UNLESS ALL SIGNATURES COMPLETED

TGS ENGINEERS
706 HILLSBOROUGH STREET
SUITE 200
RALEIGH, NC 27603
PH (919) 773-8887
CORP. LICENSE NO.: C-0275

STATE OF NORTH CAROLINA
DEPARTMENT OF TRANSPORTATION
RALEIGH

SUBSTRUCTURE

END BENT
WING DETAILS

REVISIONS						
NO.	BY:	DATE:	NO.	BY:	DATE:	
1			3			
2			4			

SHEET NO. S-15

TOTAL SHEETS 22

STD. NO. EB_33_90S4

DocuSign Envelope ID: 040B0656-6ECB-493B-BF51-E17C974D607F

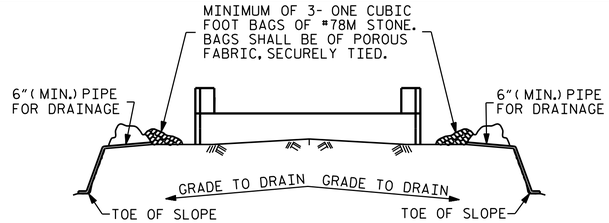

BAGGED STONE AND PIPE SHALL BE PLACED IMMEDIATELY AFTER COMPLETION OF END BENT EXCAVATION. PIPE MAY BE EITHER CONCRETE, CORRUGATED STEEL, CORRUGATED ALUMINUM ALLOY, OR CORRUGATED PLASTIC. PERFORATED PIPE WILL NOT BE ALLOWED.

BAGGED STONE SHALL REMAIN IN PLACE UNTIL THE ENGINEER DIRECTS THAT IT BE REMOVED. THE CONTRACTOR SHALL REMOVE AND DISPOSE OF SILT ACCUMULATIONS AT BAGGED STONE WHEN SO DIRECTED BY THE ENGINEER. BAGS SHALL BE REMOVED AND REPLACED WHENEVER THE ENGINEER DETERMINES THAT THEY HAVE DETERIORATED AND LOST THEIR EFFECTIVENESS.

NO SEPARATE PAYMENT WILL BE MADE FOR THIS WORK AND THE ENTIRE COST OF THIS WORK SHALL BE INCLUDED IN THE UNIT CONTRACT PRICE BID FOR THE SEVERAL PAY ITEMS.

TEMPORARY DRAINAGE AT END BENT

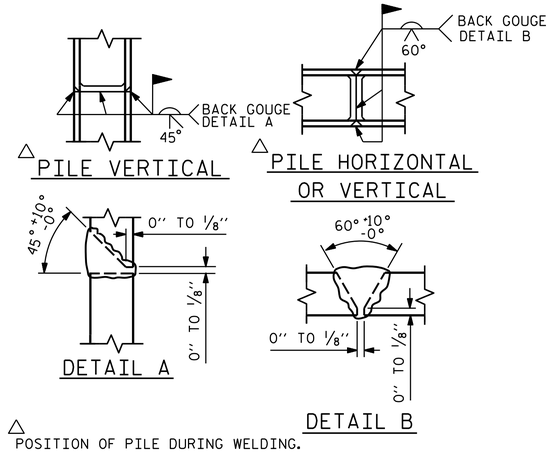

△ POSITION OF PILE DURING WELDING.

PILE SPLICE DETAILS

BAR TYPES

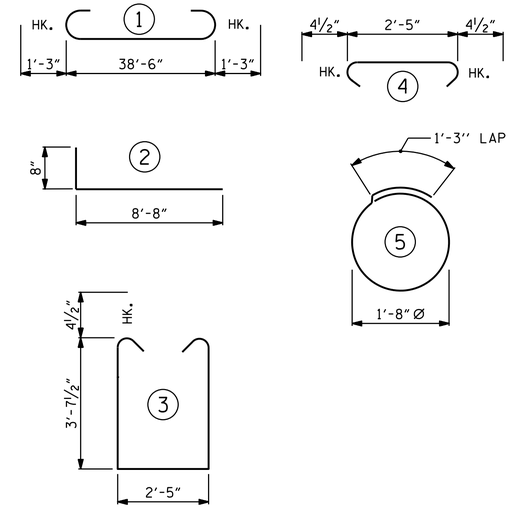

ALL BAR DIMENSIONS ARE OUT TO OUT.

END BENT No. 1	END BENT No. 2
HP 12 X 53 STEEL PILES NO: 7 LIN. FT.= 350	HP 12 X 53 STEEL PILES NO: 7 LIN. FT.= 315
PILE DRIVING EQUIPMENT SETUP FOR HP 12 X 53 STEEL PILES NO: 7 EA.	PILE DRIVING EQUIPMENT SETUP FOR HP 12 X 53 STEEL PILES NO: 7 EA.
PILE REDRIVES NO: 4 EA.	PILE REDRIVES NO: 4 EA.
STEEL PILE POINTS NO: 7 EA.	STEEL PILE POINTS NO: 7 EA.

BILL OF MATERIAL
FOR ONE END BENT

BAR	NO.	SIZE	TYPE	LENGTH	WEIGHT
B1	8	#9	1	41'-0"	1115
B2	28	#4	STR	20'-7"	385
B3	10	#4	STR	2'-5"	16
D1	22	#6	STR	1'-6"	50
H1	40	#4	2	9'-4"	249
K1	16	#4	STR	2'-11"	31
S1	50	#4	3	10'-5"	348
S2	50	#4	4	3'-2"	106
S3	28	#4	5	6'-6"	122
V1	52	#4	STR	6'-2"	214

REINFORCING STEEL (FOR ONE END BENT) 2636 LBS.

CLASS A CONCRETE BREAKDOWN (FOR ONE END BENT)

POUR #1 CAP, LOWER PART OF WINGS & COLLARS 19.5 C.Y.

POUR #2 UPPER PART OF WINGS 2.1 C.Y.

TOTAL CLASS A CONCRETE 21.6 C.Y.

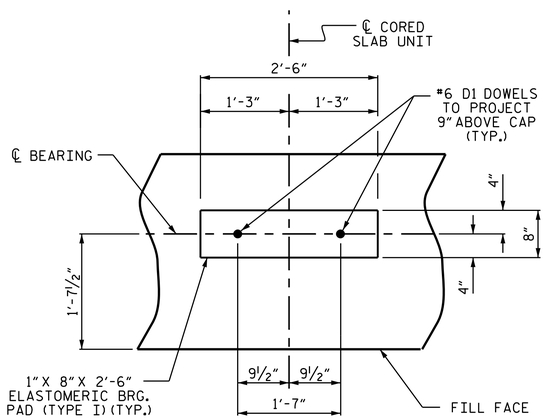

DETAIL "A"

(END BENT No. 1 SHOWN, END BENT No. 2 SIMILAR BY ROTATION)

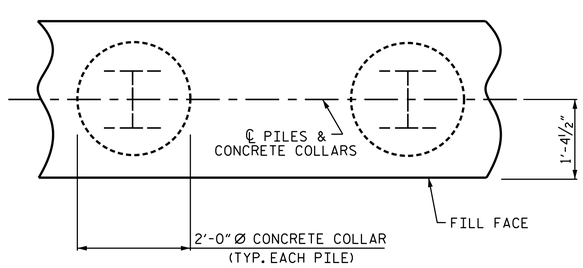

PLAN

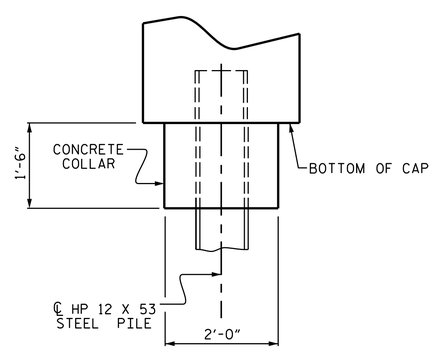

ELEVATION

CORROSION PROTECTION FOR STEEL PILES DETAIL

(END BENT No. 1 SHOWN, END BENT No. 2 SIMILAR BY ROTATION)

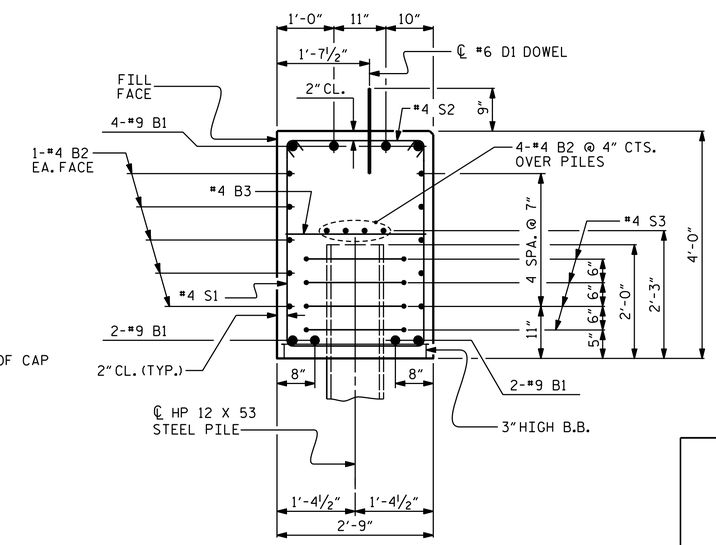

SECTION A-A

(CONCRETE COLLAR NOT SHOWN FOR CLARITY. SEE "CORROSION PROTECTION FOR STEEL PILES DETAIL.")

PROJECT NO. B-4605
PITT COUNTY
STATION: 14+14.00 -L-

SHEET 4 OF 4

NORTH CAROLINA PROFESSIONAL SEAL 20125 ENGINEER MARSHALL G. CHECK, JR.

DocuSigned by: Marshall G. Check, Jr.
5FBCC2F3A4DC413...
1/6/2020

DOCUMENT NOT CONSIDERED FINAL UNLESS ALL SIGNATURES COMPLETED

TGS ENGINEERS
706 HILLSBOROUGH STREET
SUITE 200
RALEIGH, NC 27603
PH. (919) 773-8887
CORP. LICENSE NO.: C-0275

STATE OF NORTH CAROLINA
DEPARTMENT OF TRANSPORTATION
RALEIGH

SUBSTRUCTURE

END BENT No. 1 & 2 DETAILS

REVISIONS							
NO.	BY:	DATE:	NO.	BY:	DATE:	SHEET NO.	S-16
1			3			TOTAL SHEETS	22
2			4				

ASSEMBLED BY :	CCC	DATE :	11/18
CHECKED BY :	MGC	DATE :	1/19
DRAWN BY : WJH	12/11	REV. 4/17	MAA/THC
CHECKED BY : AAC	12/11		

STD. NO. EB_33_90S4

DocuSign Envelope ID: 040B0656-6ECB-493B-BF51-E17C974D607F

NOTES

STIRRUPS IN CAP MAY BE SHIFTED AS NECESSARY TO CLEAR DOWELS.

★ INVERT ALTERNATE STIRRUPS.

GALVANIZE THE TOP OF EACH INTERIOR BENT PILE A MINIMUM OF 25 FEET. GALVANIZE IN ACCORDANCE WITH SECTION 1076 OF THE STANDARD SPECIFICATIONS.

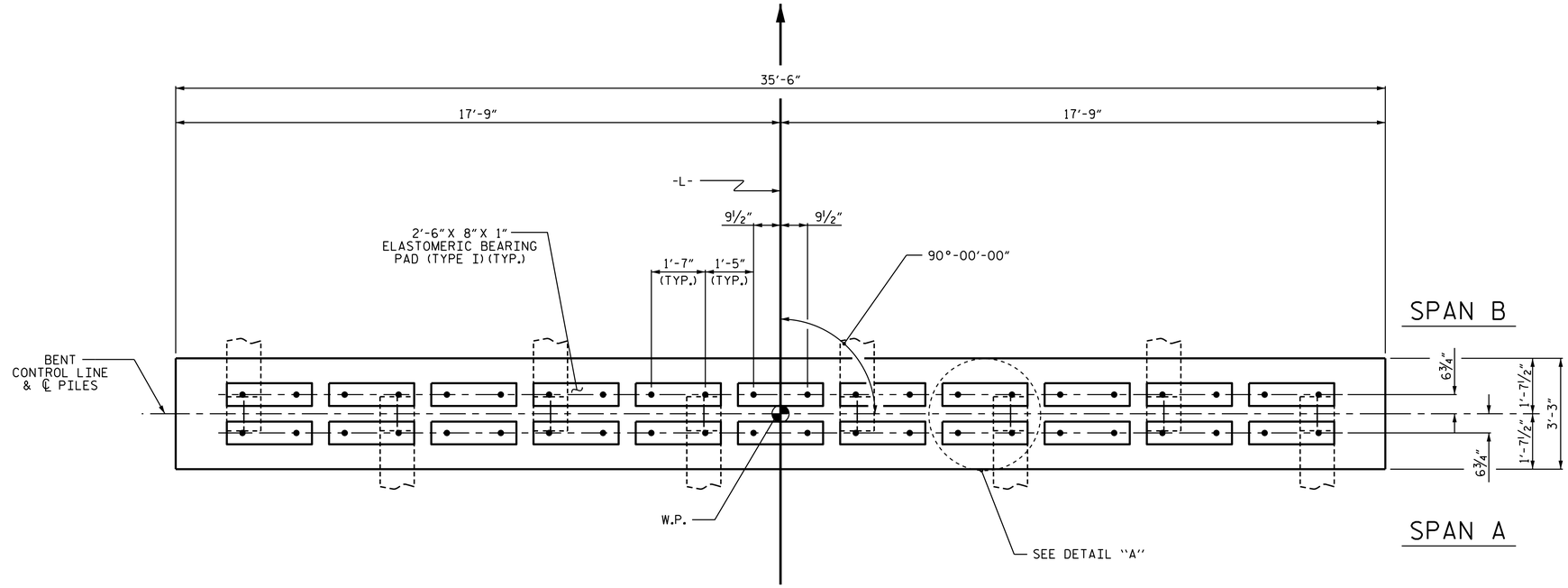

PLAN

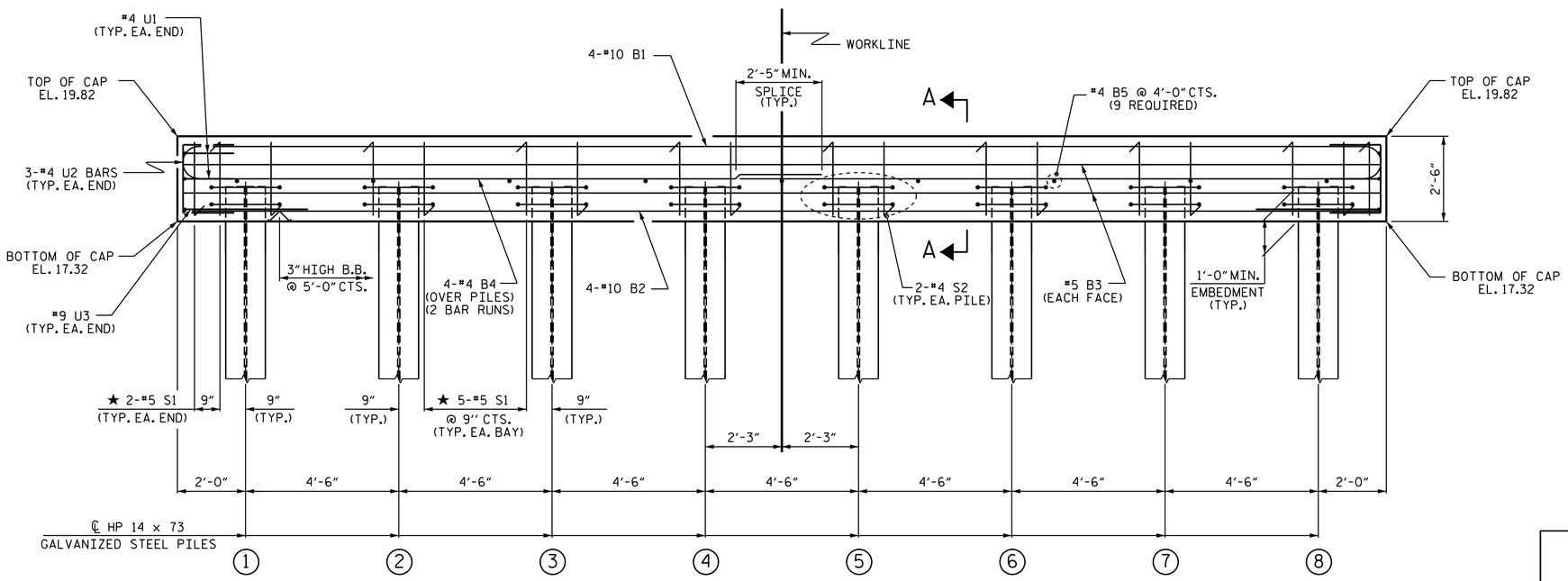

ELEVATION

FOR SECTION A-A, SEE SHEET 3 OF 3

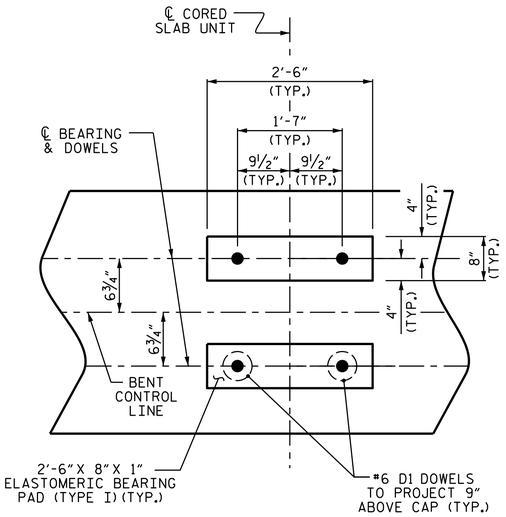

DETAIL "A"

(DIMENSIONS ARE TYPICAL EACH BEARING)

PROJECT NO. B-4605

PITT COUNTY

STATION: 14+14.00 -L-

SHEET 1 OF 3

NORTH CAROLINA PROFESSIONAL SEAL 20125 ENGINEER MARSHALL G. CHECK, JR.

Marshall G. Check, Jr.

1/6/2020

DOCUMENT NOT CONSIDERED FINAL UNLESS ALL SIGNATURES COMPLETED

TGS ENGINEERS
706 HILLSBOROUGH STREET
SUITE 200
RALEIGH, NC 27603
PH (919) 773-8887
CORP. LICENSE NO.: C-0275

STATE OF NORTH CAROLINA
DEPARTMENT OF TRANSPORTATION
RALEIGH

SUBSTRUCTURE

BENT No. 1

ASSEMBLED BY :	CCC	DATE :	11/18
CHECKED BY :	MGC	DATE :	1/19
DRAWN BY : DGE	05/10	REV. 6/17	MAA/THC
CHECKED BY : MKT	05/10		

REVISIONS								SHEET NO.
NO.	BY:	DATE:	NO.	BY:	DATE:			S-17
1			3					TOTAL SHEETS
2			4					22

STD. NO. 14" HP_BT_33_90S_<60'

DocuSign Envelope ID: 040B0656-6ECB-493B-BF51-E17C974D607F

NOTES

STIRRUPS IN CAP MAY BE SHIFTED AS NECESSARY TO CLEAR DOWELS.

★ INVERT ALTERNATE STIRRUPS.

GALVANIZE THE TOP OF EACH INTERIOR BENT PILE A MINIMUM OF 25 FEET. GALVANIZE IN ACCORDANCE WITH SECTION 1076 OF THE STANDARD SPECIFICATIONS.

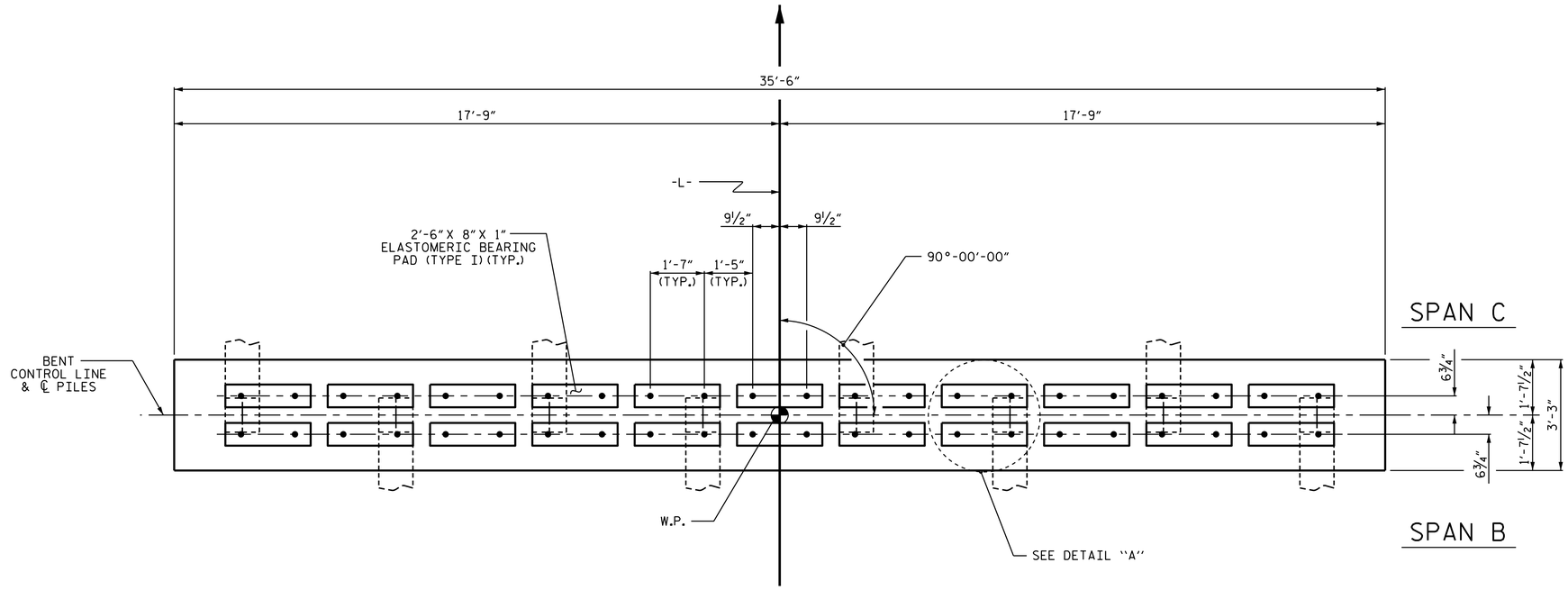

PLAN

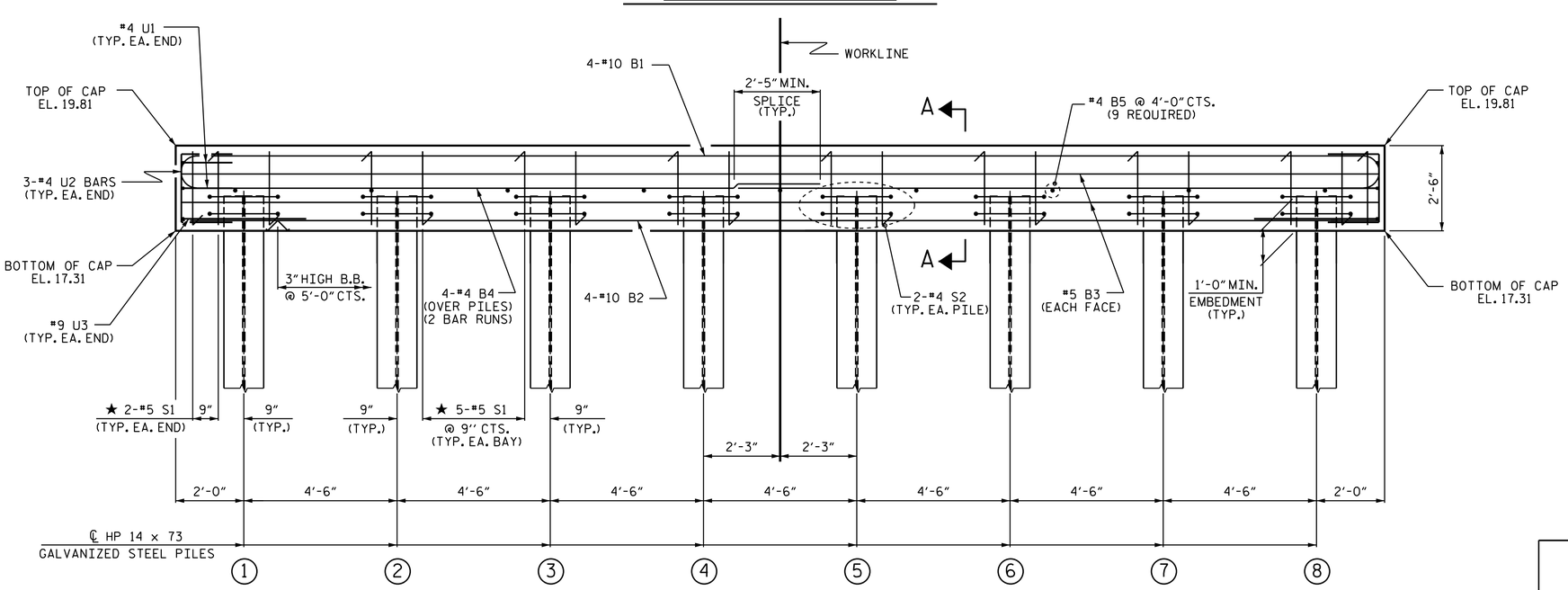

ELEVATION

FOR SECTION A-A, SEE SHEET 3 OF 3

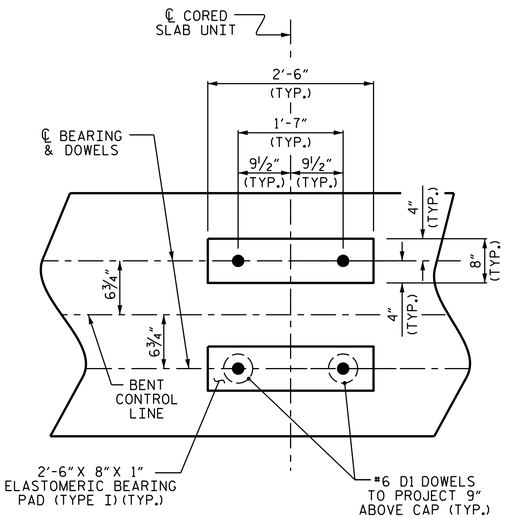

DETAIL "A"

(DIMENSIONS ARE TYPICAL EACH BEARING)

PROJECT NO. B-4605

PITT COUNTY

STATION: 14+14.00 -L-

SHEET 2 OF 3

ASSEMBLED BY : CCC	DATE : 11/18		
CHECKED BY : MGC	DATE : 1/19		
DRAWN BY : DGE 05/10	REV. 6/17	MAA/THC	
CHECKED BY : MKT 05/10			

NORTH CAROLINA PROFESSIONAL SEAL 20125 ENGINEER MARSHALL G. CHECK, JR.

DocuSigned by: Marshall G. Check, Jr. 5FBCC2F3A4DC413...

1/6/2020

DOCUMENT NOT CONSIDERED FINAL UNLESS ALL SIGNATURES COMPLETED

TGS ENGINEERS
706 HILLSBOROUGH STREET
SUITE 200
RALEIGH, NC 27603
PH. (919) 773-8887
CORP. LICENSE NO.: C-0275

STATE OF NORTH CAROLINA
DEPARTMENT OF TRANSPORTATION
RALEIGH

SUBSTRUCTURE

BENT No. 2

REVISIONS						
NO.	BY:	DATE:	NO.	BY:	DATE:	
1			3			
2			4			

SHEET NO. S-18

TOTAL SHEETS 22

STD. NO. 14" HP_BT_33_90S_<60'

DocuSign Envelope ID: 040B0656-6ECB-493B-BF51-E17C974D607F

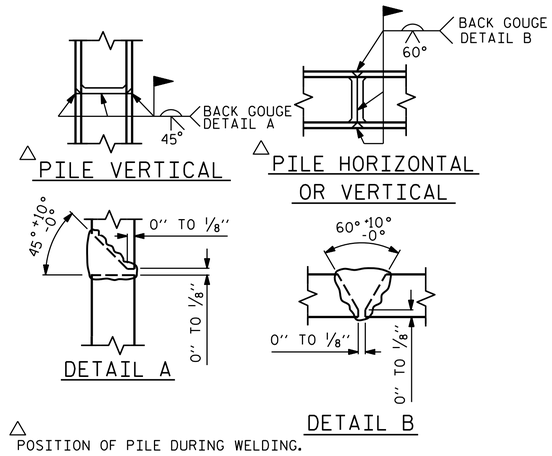

PILE SPLICE DETAILS

BAR TYPES

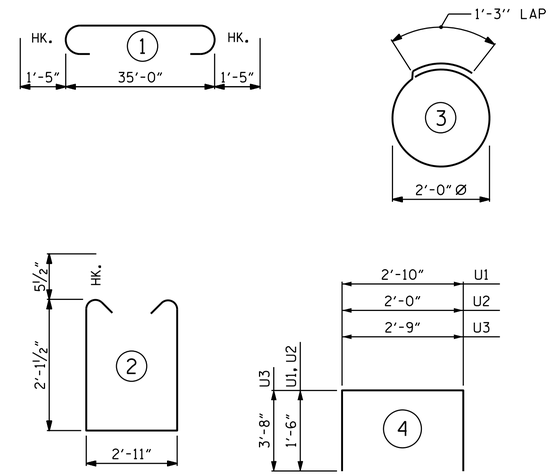

ALL BAR DIMENSIONS ARE OUT TO OUT.

BILL OF MATERIAL
FOR ONE BENT

BAR	NO.	SIZE	TYPE	LENGTH	WEIGHT
B1	4	#10	1	37'-10"	651
B2	4	#10	STR	35'-2"	605
B3	4	#5	STR	35'-2"	147
B4	8	#4	STR	18'-10"	101
B5	9	#4	STR	2'-11"	18
D1	44	#6	STR	1'-6"	99
S1	39	#5	2	8'-1"	329
S2	16	#4	3	7'-7"	81
U1	4	#4	4	5'-10"	16
U2	6	#4	4	5'-0"	20
U3	2	#9	4	10'-1"	69

REINFORCING STEEL (FOR ONE BENT) 2136 LBS

CLASS A CONCRETE BREAKDOWN (FOR ONE BENT)

TOTAL CLASS A CONCRETE 10.7 C.Y.

HP 14 X 73 GALVANIZED STEEL PILES (FOR ONE BENT)

No. 8 LIN. FT. 440

PILE DRIVING EQUIPMENT SETUP FOR HP 14 X 73 GALVANIZED STEEL PILES (FOR ONE BENT) NO: 8 EA.

PILE REDRIVES NO: 4 EA.

STEEL PILE POINTS NO: 8 EA.

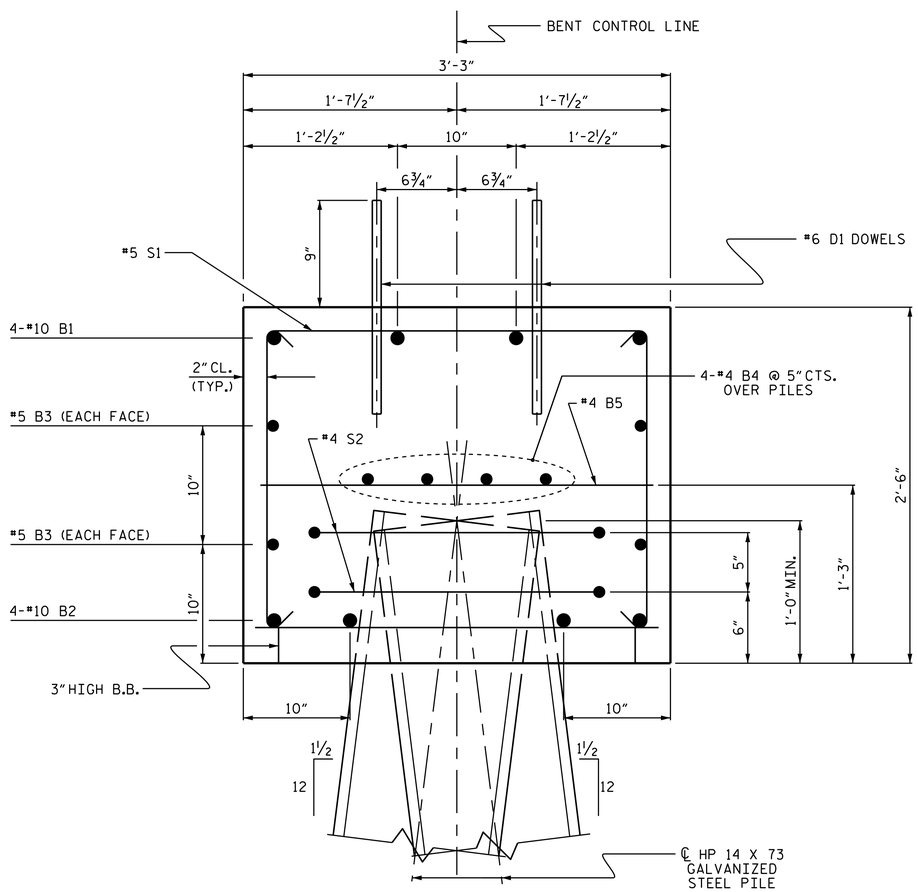

SECTION A-A

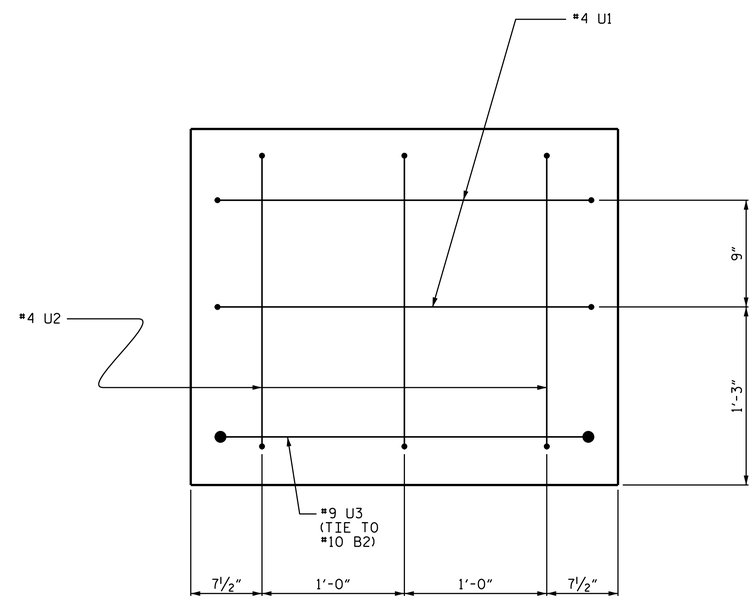

END OF CAP VIEW
(TYPICAL BOTH ENDS)

PROJECT NO. B-4605
PITT COUNTY
STATION: 14+14.00 -L-

SHEET 3 OF 3

NORTH CAROLINA PROFESSIONAL SEAL 20125 ENGINEER MARSHALL G. CHECKY, JR.

DocuSigned by: Marshall G. Checky, Jr. 5FBCC2F3A4DC413... 1/6/2020

DOCUMENT NOT CONSIDERED FINAL UNLESS ALL SIGNATURES COMPLETED

TGS ENGINEERS
706 HILLSBOROUGH STREET
SUITE 200
RALEIGH, NC 27603
PH (919) 773-8887
CORP. LICENSE NO.: C-0275

STATE OF NORTH CAROLINA
DEPARTMENT OF TRANSPORTATION
RALEIGH

SUBSTRUCTURE

BENT No. 1 & 2

REVISIONS						
NO.	BY:	DATE:	NO.	BY:	DATE:	
1			3			
2			4			

SHEET NO. S-19
TOTAL SHEETS 22

ASSEMBLED BY : CCC		DATE : 11/18	
CHECKED BY : MGC		DATE : 1/19	
DRAWN BY : DGE 05/10	REV. 6/17	MAA/THC	
CHECKED BY : MKT 05/10			

STD. NO. 14" HP_BT_33_90S_<60'

DocuSign Envelope ID: 040B0656-6ECB-493B-BF51-E17C974D607F

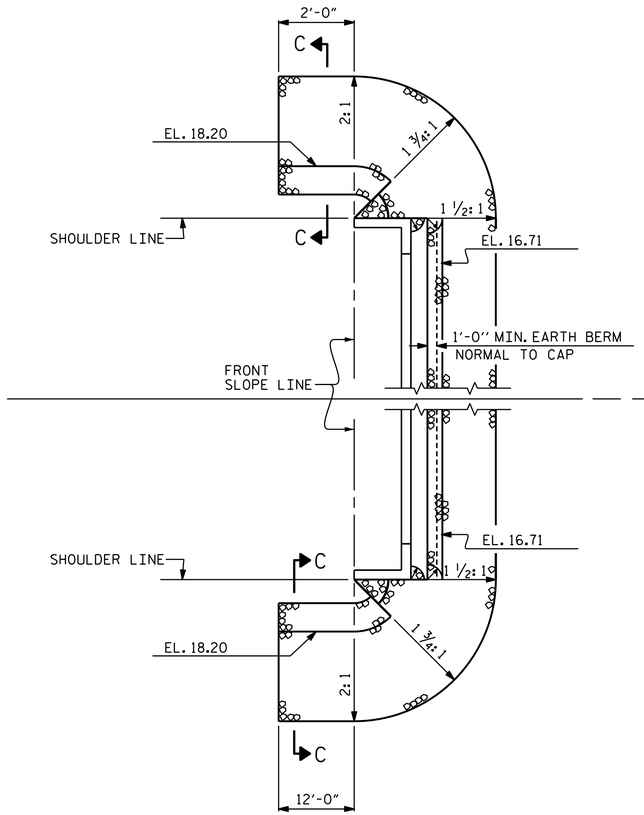

END BENT 1

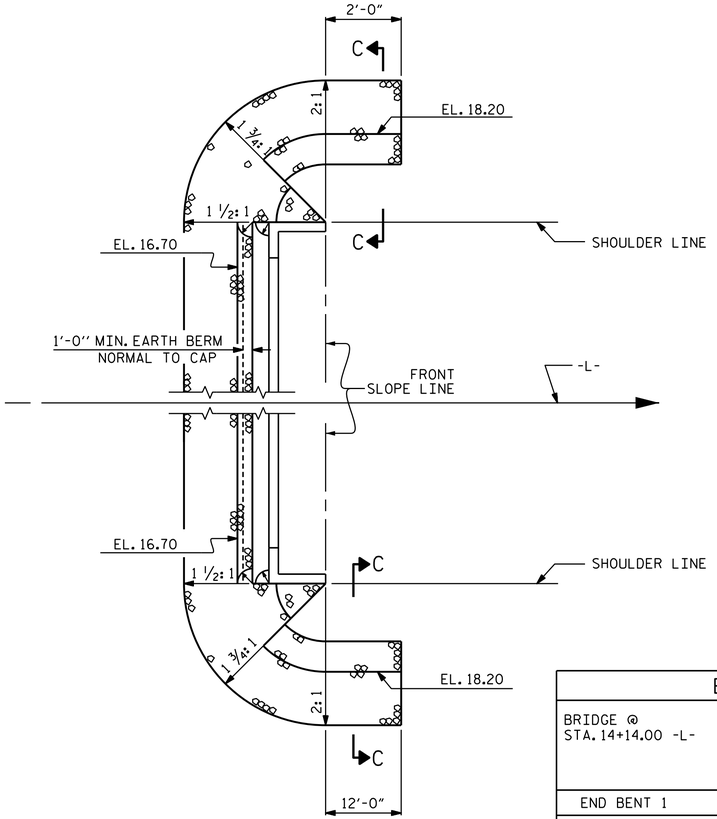

END BENT 2

PLAN

ESTIMATED QUANTITIES		
BRIDGE @ STA. 14+14.00 -L-	RIP RAP CLASS II (2'-0" THICK)	GEOTEXTILE FOR DRAINAGE
	TONS	SQUARE YARDS
END BENT 1	120	135
END BENT 2	120	135

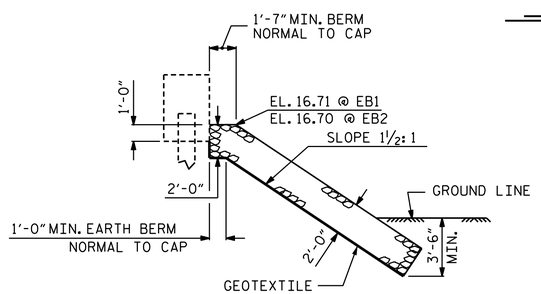

℄ SECTION
BERM RIP RAPPED

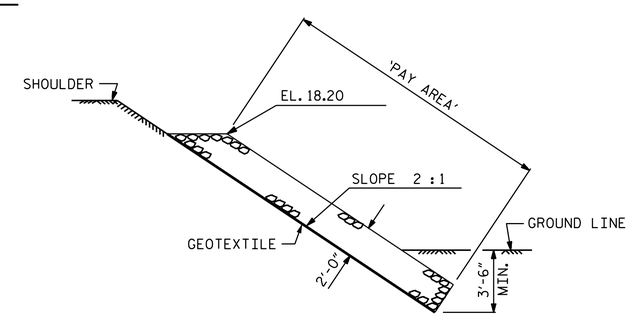

SECTION C-C

PROJECT NO. B-4605
PITT COUNTY
STATION: 14+14.00 -L-

NORTH CAROLINA PROFESSIONAL SEAL 20125 ENGINEER MARSHALL C. CHEEK, JR.
DocuSigned by: Marshall C. Cheek, Jr.
5FBCC2F3A4DC413...
1/6/2020

DOCUMENT NOT CONSIDERED FINAL UNLESS ALL SIGNATURES COMPLETED
TGS ENGINEERS
706 HILLSBOROUGH STREET
SUITE 200
RALEIGH, NC 27603
PH (919) 773-8887
CORP. LICENSE NO.: C-0275

STATE OF NORTH CAROLINA
DEPARTMENT OF TRANSPORTATION
RALEIGH

STANDARD

RIP RAP DETAILS

REVISIONS							
NO.	BY:	DATE:	NO.	BY:	DATE:		
1			3				
2			4				

SHEET NO. S-20
TOTAL SHEETS 22

ASSEMBLED BY : CCC	DATE : 11/18		
CHECKED BY : MGC	DATE : 1/19		
DRAWN BY : REK 1/84	REV. 10/1/11	MAA/GM	
CHECKED BY : RDU 1/84	REV. 12/21/11	MAA/GM	
	REV. 12/17	MAA/THC	

STD. NO. RR1 (Sht 2)

DocuSign Envelope ID: 040B0656-6ECB-493B-BF51-E17C974D607F

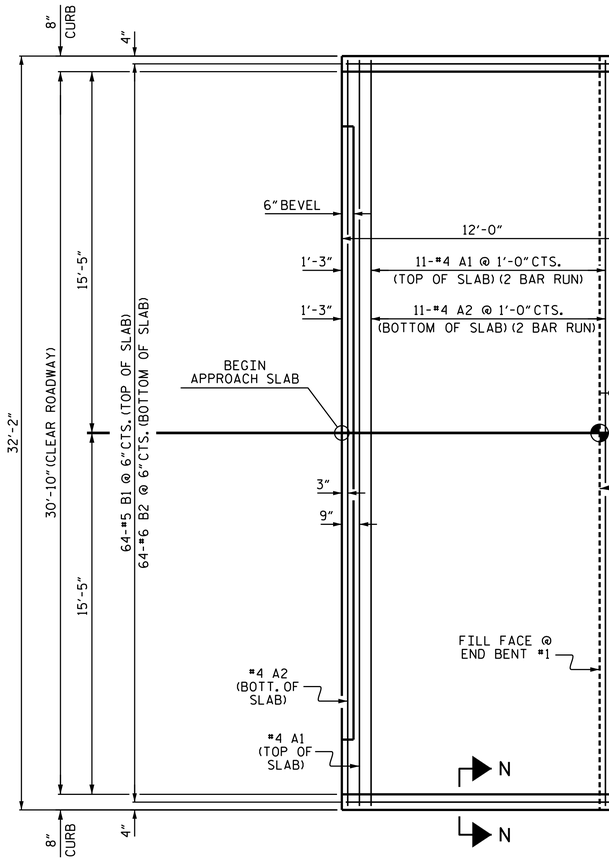

PLAN @ END BENT #1

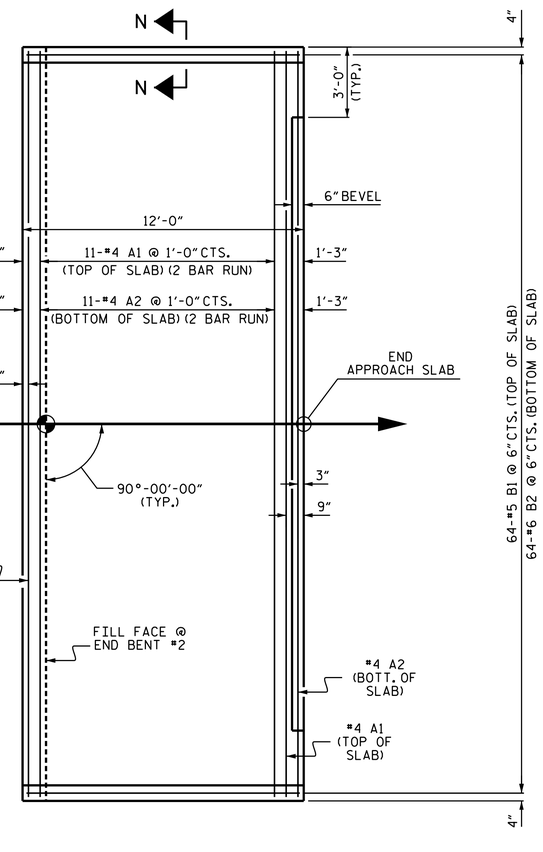

PLAN @ END BENT #2

DIMENSIONS SHOWN ARE TYPICAL FOR BOTH APPROACH SLABS

NOTES

FOR BRIDGE APPROACH FILL INCLUDING GEOTEXTILE, 4"Ø DRAINAGE PIPE, AND SELECT MATERIAL BACKFILL, SEE ROADWAY PLANS.

GEOTEXTILE SHALL BE TYPE 1 IN ACCORDANCE WITH THE STANDARD SPECIFICATIONS SECTION 1056.

SELECT MATERIAL BACKFILL (CLASS V OR CLASS VI) SHALL BE IN ACCORDANCE WITH STANDARD SPECIFICATIONS SECTION 1016.

SELECT MATERIAL BACKFILL IS TO BE CONTINUOUS ALONG FILL FACE OF BACKWALL FROM OUTSIDE EDGE TO OUTSIDE EDGE OF APPROACH SLAB.

FOR THE 4"Ø DRAINAGE PIPE OUTLET(S), SEE ROADWAY STANDARD DRAWINGS.

AREA BETWEEN THE WINGWALL AND APPROACH SLAB SHALL BE GRADED TO DRAIN THE WATER AWAY FROM THE FILL FACE OF THE BRIDGE AND SHALL BE PAVED. SEE ROADWAY PLANS.

APPROACH SLAB GROOVING IS NOT REQUIRED.

SPLICE LENGTHS

BAR SIZE	EPOXY COATED	UNCOATED
#4	2'-0"	1'-9"
#5	2'-6"	2'-2"
#6	3'-10"	2'-7"

BILL OF MATERIAL

APPROACH SLAB AT EB #1

BAR	NO.	SIZE	TYPE	LENGTH	WEIGHT
* A1	26	#4	STR	16'-11"	294
A2	26	#4	STR	16'-9"	291
* B1	64	#5	STR	11'-2"	745
B2	64	#6	STR	11'-8"	1121
REINFORCING STEEL				LBS.	1412
* EPOXY COATED REINFORCING STEEL				LBS.	1039
CLASS AA CONCRETE				C.Y.	18.4

APPROACH SLAB AT EB #2

BAR	NO.	SIZE	TYPE	LENGTH	WEIGHT
* A1	26	#4	STR	16'-11"	294
A2	26	#4	STR	16'-9"	291
* B1	64	#5	STR	11'-2"	745
B2	64	#6	STR	11'-8"	1121
REINFORCING STEEL				LBS.	1412
* EPOXY COATED REINFORCING STEEL				LBS.	1039
CLASS AA CONCRETE				C.Y.	18.4

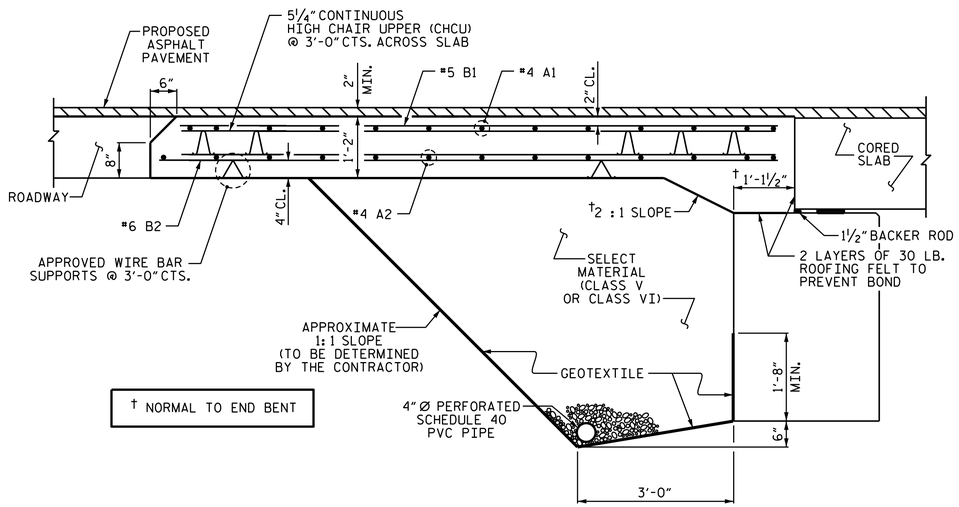

† NORMAL TO END BENT

SECTION THRU SLAB

(TYPE II - MODIFIED APPROACH FILL)

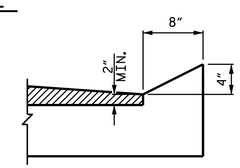

SECTION N-N

CURB DETAILS

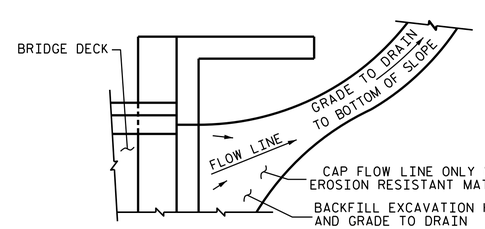

NOTE: IF THE APPROACH SLAB IS NOT CONSTRUCTED IMMEDIATELY AFTER THE BACKFILLING OF THE END BENT EXCAVATION, GRADE TO DRAIN TO THE BOTTOM OF THE SLOPE AND PROVIDE EROSION RESISTANT MATERIAL, SUCH AS FIBERGLASS ROVING OR AS DIRECTED BY THE ENGINEER TO PREVENT SOIL EROSION AND TO PROTECT THE AREA ADJACENT TO THE STRUCTURE. THE CONTRACTOR WILL BE REQUIRED TO REMOVE THESE MATERIALS PRIOR TO CONSTRUCTION OF THE APPROACH SLAB.

TEMPORARY DRAINAGE DETAIL

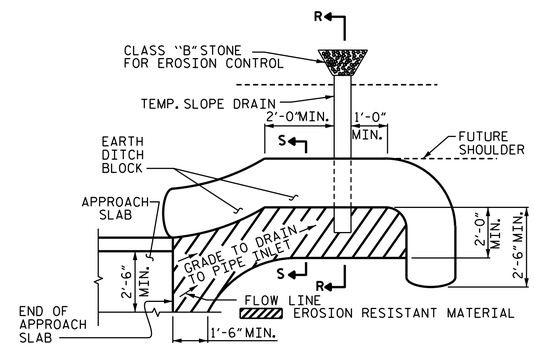

NOTE: IMMEDIATELY AFTER THE CONSTRUCTION OF THE APPROACH SLAB, THE CONTRACTOR SHALL PROVIDE TEMPORARY BERM AND SLOPE DRAIN. CONTRACTOR SHALL GRADE TO PIPE INLET AND PROVIDE EROSION RESISTANT MATERIAL AS SHOWN. THE EROSION RESISTANT MATERIAL SHALL BE EITHER 1) ASPHALT PLANT MIX, TYPE 1 OR TYPE 2, MIN. 2" DEPTH, 2) EROSION CONTROL MAT, OR 3) CONCRETE, AS DIRECTED BY THE ENGINEER. THE SLOPE DRAIN SHALL CONSIST OF A NON-PERFORATED TEMPORARY DRAINAGE PIPE, 12 INCHES IN DIAMETER.

PLAN VIEW

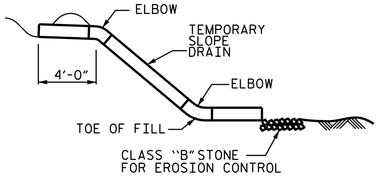

SECTION R-R

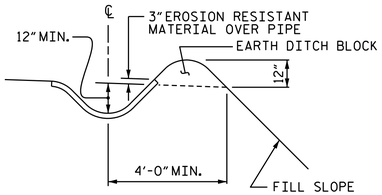

SECTION S-S

TEMPORARY BERM AND SLOPE DRAIN DETAILS

(TO BE USED WHEN SHOULDER BERM GUTTER IS REQUIRED)

PROJECT NO. 17BP.3.R.83

DUPLIN COUNTY

STATION: 17+00.00 -L-

NORTH CAROLINA PROFESSIONAL SEAL 20125 ENGINEER MARSHALL B. CHEEK, JR.

Marshall B. Cheek, Jr.

5FBCC2F3A4DC413...

1/6/2020

DOCUMENT NOT CONSIDERED FINAL UNLESS ALL SIGNATURES COMPLETED

TGS ENGINEERS
706 HILLSBOROUGH STREET
SUITE 200
RALEIGH, NC 27603
PH (919) 773-8887
CORP. LICENSE NO.: C-0275

STATE OF NORTH CAROLINA
DEPARTMENT OF TRANSPORTATION
RALEIGH

STANDARD

BRIDGE APPROACH SLAB FOR PRESTRESSED CONCRETE CORED SLAB UNIT

(SUB-REGIONAL TIER)

REVISIONS							SHEET NO.
NO.	BY:	DATE:	NO.	BY:	DATE:		S-21
1			3				TOTAL SHEETS
2			4				22

ASSEMBLED BY :	CCC	DATE :	11/18
CHECKED BY :	MGC	DATE :	1/19
DRAWN BY : SHS/MAA 5-09	REV. 12-17	MAA/THC	
CHECKED BY : BCH 5-09			

11/26/2019
X:\NCDOT\B-4605\Structures\FinalPlans\DGNs\401_043_B-4605_SMU_ AS_730005.dgn
User:tennis

STANDARD NOTES

DESIGN DATA:

SPECIFICATIONS	A.A.S.H.T.O. (CURRENT)
LIVE LOAD	SEE PLANS
IMPACT ALLOWANCE	SEE A.A.S.H.T.O.
STRESS IN EXTREME FIBER OF STRUCTURAL STEEL - AASHTO M270 GRADE 36	20,000 LBS. PER SQ. IN.
- AASHTO M270 GRADE 50W	27,000 LBS. PER SQ. IN.
- AASHTO M270 GRADE 50	27,000 LBS. PER SQ. IN.
REINFORCING STEEL IN TENSION - GRADE 60	24,000 LBS. PER SQ. IN.
CONCRETE IN COMPRESSION	1,200 LBS. PER SQ. IN.
CONCRETE IN SHEAR	SEE A.A.S.H.T.O.
STRUCTURAL TIMBER - TREATED OR UNTREATED EXTREME FIBER STRESS	1,800 LBS. PER SQ. IN.
COMPRESSION PERPENDICULAR TO GRAIN OF TIMBER	375 LBS. PER SQ. IN.
EQUIVALENT FLUID PRESSURE OF EARTH	30 LBS. PER CU. FT. (MINIMUM)

MATERIAL AND WORKMANSHIP:

EXCEPT AS MAY OTHERWISE BE SPECIFIED ON PLANS OR IN THE SPECIAL PROVISIONS, ALL MATERIAL AND WORKMANSHIP SHALL BE IN ACCORDANCE WITH THE 2018 "STANDARD SPECIFICATIONS FOR ROADS AND STRUCTURES" OF THE N. C. DEPARTMENT OF TRANSPORTATION.

STEEL SHEET PILING FOR PERMANENT OR TEMPORARY APPLICATIONS SHALL BE HOT ROLLED.

CONCRETE:

UNLESS OTHERWISE REQUIRED ON PLANS, CLASS A CONCRETE SHALL BE USED FOR ALL PORTIONS OF ALL STRUCTURES WITH THE EXCEPTION THAT: CLASS AA CONCRETE SHALL BE USED IN BRIDGE SUPERSTRUCTURES, ABUTMENT BACKWALLS, AND APPROACH SLABS; AND CLASS B CONCRETE SHALL BE USED FOR SLOPE PROTECTION AND RIP RAP.

CONCRETE CHAMFERS:

UNLESS OTHERWISE NOTED ON THE PLANS, ALL EXPOSED CORNERS ON STRUCTURES SHALL BE CHAMFERED ¾" WITH THE FOLLOWING EXCEPTIONS: TOP CORNERS OF CURBS MAY BE ROUNDED TO 1½" RADIUS WHICH IS BUILT INTO CURB FORMS; CORNERS OF TRANSVERSE FLOOR EXPANSION JOINTS SHALL BE ROUNDED WITH A ¼" FINISHING TOOL UNLESS OTHERWISE REQUIRED ON PLANS; AND CORNERS OF EXPANSION JOINTS IN THE ROADWAY FACES AND TOPS OF CURBS AND SIDEWALKS SHALL BE ROUNDED TO A ¼" RADIUS WITH A FINISHING STONE OR TOOL UNLESS OTHERWISE REQUIRED ON PLANS.

DOWELS:

DOWELS WHEN INDICATED ON PLANS AS FOR CULVERT EXTENSIONS, SHALL BE EMBEDDED AT LEAST 12" INTO THE OLD CONCRETE AND GROUTED INTO PLACE WITH 1:2 CEMENT MORTAR.

ALLOWANCE FOR DEAD LOAD DEFLECTION, SETTLEMENT, ETC. IN CASTING SUPERSTRUCTURES:

BRIDGES SHALL BE BUILT ON THE GRADE OR VERTICAL CURVE SHOWN ON PLANS. SLABS, CURBS AND PARAPETS SHALL CONFORM TO THE GRADE OR CURVE.

ALL DIMENSIONS WHICH ARE GIVEN IN SECTION AND ARE AFFECTED BY DEAD LOAD DEFLECTIONS ARE DIMENSIONS AT CENTER LINE OF BEARING UNLESS OTHERWISE NOTED ON PLANS. IN SETTING FORMS FOR STEEL BEAM BRIDGES AND PRESTRESSED CONCRETE GIRDER BRIDGES, ADJUSTMENTS SHALL BE MADE DUE TO THE DEAD LOAD DEFLECTIONS FOR THE ELEVATIONS SHOWN. WHERE BLOCKS ARE SHOWN OVER BEAMS FOR BUILDING UP TO THE SLAB, THE VERTICAL DIMENSIONS OF THE BLOCKS SHALL BE ADJUSTED BETWEEN BEARINGS TO COMPENSATE FOR DEAD LOAD DEFLECTIONS, VERTICAL CURVE ORDINATE, AND ACTUAL BEAM CAMBER. WHERE BOTTOM OF SLAB IS IN LINE WITH BOTTOM OF TOP FLANGES, DEPTH OF SLAB BETWEEN BEARINGS SHALL BE ADJUSTED TO COMPENSATE FOR DEAD LOAD DEFLECTION, VERTICAL CURVE ORDINATE, AND ACTUAL BEAM CAMBER.

IN SETTING FALSEWORK AND FORMS FOR REINFORCED CONCRETE SPANS, AN ALLOWANCE SHALL BE MADE FOR DEAD LOAD DEFLECTIONS, SETTLEMENT OF FALSEWORK, AND PERMANENT CAMBER WHICH SHALL BE PROVIDED FOR IN ADDITION TO THE ELEVATIONS SHOWN. AFTER REMOVAL OF THE FALSEWORK, THE FINISHED STRUCTURES SHALL CONFORM TO THE PROFILE AND ELEVATIONS SHOWN ON THE PLANS AND CONSTRUCTION ELEVATIONS FURNISHED BY THE ENGINEER.

DETAILED DRAWINGS FOR FALSEWORK OR FORMS FOR BRIDGE SUPERSTRUCTURE AND ANY STRUCTURE OR PARTS OF A STRUCTURE AS NOTED ON THE PLANS SHALL BE SUBMITTED TO THE ENGINEER FOR APPROVAL BEFORE CONSTRUCTION OF THE FALSEWORK OR FORMS IS STARTED.

REINFORCING STEEL:

ALL REINFORCING STEEL SHALL BE DEFORMED. DIMENSIONS RELATIVE TO PLACEMENT OF REINFORCING ARE TO CENTERS OF BARS UNLESS OTHERWISE INDICATED IN THE PLANS. DIMENSIONS ON BAR DETAILS ARE TO CENTERS OF BARS OR ARE OUT TO OUT AS INDICATED ON PLANS.

WIRE BAR SUPPORTS SHALL BE PROVIDED FOR REINFORCING STEEL WHERE INDICATED ON THE PLANS. WHEN BAR SUPPORT PIECES ARE PLACED IN CONTINUOUS LINES, THEY SHALL BE SO PLACED THAT THE ENDS OF THE SUPPORTING WIRES SHALL BE LAPPED TO LOCK LEGS ON ADJOINING PIECES.

STRUCTURAL STEEL:

AT THE CONTRACTOR'S OPTION, HE MAY SUBSTITUTE ⅞" Ø SHEAR STUDS FOR THE ¾" Ø STUDS SPECIFIED ON THE PLANS. THIS SUBSTITUTION SHALL BE MADE AT THE RATE OF 3 - ⅞" Ø STUDS FOR 4 - ¾" Ø STUDS, AND STUD SPACING CHANGES SHALL BE MADE AS NECESSARY TO PROVIDE THE SAME EQUIVALENT NUMBER OF ⅞" Ø STUDS ALONG THE BEAM AS SHOWN FOR ¾" Ø STUDS BASED ON THE RATIO OF 3 - ⅞" Ø STUDS FOR 4 - ¾" Ø STUDS. STUDS OF THE LENGTH SPECIFIED ON THE PLANS MUST BE PROVIDED. THE MAXIMUM SPACING SHALL BE 2'-0".

EXCEPT AT THE INTERIOR SUPPORTS OF CONTINUOUS BEAMS WHERE THE COVER PLATE IS IN CONTACT WITH BEARING PLATE, THE CONTRACTOR MAY, AT HIS OPTION, SUBSTITUTE FOR THE COVER PLATES DESIGNATED ON THE PLANS COVER PLATES OF THE EQUIVALENT AREA PROVIDED THESE PLATES ARE AT LEAST 5/16" IN THICKNESS AND DO NOT EXCEED A WIDTH EQUAL TO THE FLANGE WIDTH LESS 2" OR A THICKNESS EQUAL TO 2 TIMES THE FLANGE THICKNESS. THE SIZE OF FILLET WELDS SHALL CONFORM TO THE REQUIREMENTS OF THE CURRENT ANSI/AASHTO/AWS "BRIDGE WELDING CODE". ELECTROSLAG WELDING WILL NOT BE PERMITTED.

WITH THE SOLE EXCEPTION OF EDGES AT SURFACES WHICH BEAR ON OTHER SURFACES, ALL SHARP EDGES AND ENDS OF SHAPES AND PLATES SHALL BE SLIGHTLY ROUNDED BY SUITABLE MEANS TO A RADIUS OF APPROXIMATELY 1/16 INCH OR EQUIVALENT FLAT SURFACE AT A SUITABLE ANGLE PRIOR TO PAINTING, GALVANIZING, OR METALLIZING.

HANDRAILS AND POSTS:

METAL STANDARDS AND FACES OF THE CONCRETE END POSTS FOR THE METAL RAIL SHALL BE SET NORMAL TO THE GRADE OF THE CURB, UNLESS OTHERWISE SHOWN ON PLANS. THE METAL RAIL AND TOPS OF CONCRETE POSTS USED WITH THE ALUMINUM RAIL SHALL BE BUILT PARALLEL TO THE GRADE OF THE CURB.

METAL HANDRAILS SHALL BE IN ACCORDANCE WITH THE PLANS. RAILS SHALL BE AS MANUFACTURED FOR BRIDGE RAILING. CASTINGS SHALL BE OF A UNIFORM APPEARANCE. FINS AND OTHER DEFORMATIONS RESULTING FROM CASTING OR OTHERWISE SHALL BE REMOVED IN A MANNER SO THAT A UNIFORM COLORING OF THE COMPLETED CASTING SHALL BE OBTAINED. CASTINGS WITH DISCOLORATIONS OR OF NON-UNIFORM COLORING WILL NOT BE ACCEPTED. CERTIFIED MILL REPORTS ARE REQUIRED FOR METAL RAILS AND POSTS.

SPECIAL NOTES:

GENERALLY, IN CASE OF DISCREPANCY, THIS STANDARD SHEET OF NOTES SHALL GOVERN OVER THE SPECIFICATIONS, BUT THE REMAINDER OF THE PLANS SHALL GOVERN OVER NOTES HEREON, AND SPECIAL PROVISIONS SHALL GOVERN OVER ALL. SEE SPECIFICATIONS ARTICLE 105-4.

PROJECT NO. B-4605

PITT COUNTY

STATION: 14+14.00 -L-

STATE OF NORTH CAROLINA
DEPARTMENT OF TRANSPORTATION
RALEIGH

STANDARD NOTES

REVISIONS						SHEET NO.
NO.	BY:	DATE:	NO.	BY:	DATE:	S-22
1			3			TOTAL SHEETS
2			4			22

STATE	STATE PROJECT REFERENCE NO.	SHEET NO.	TOTAL SHEETS
N.C.	B-4605	1	6

STATE OF NORTH CAROLINA
DEPARTMENT OF TRANSPORTATION
DIVISION OF HIGHWAYS
GEOTECHNICAL ENGINEERING UNIT

STRUCTURE SUBSURFACE INVESTIGATION

COUNTY PITT

PROJECT DESCRIPTION BRIDGE NO. 5 ON -L- (SR 1777) OVER CHICOD CREEK AT STA. 14+14.00

REFERENCE: B-4605

PROJECT: 17BP.2.R.91

CONTENTS

SHEET NO.	DESCRIPTION
1	TITLE SHEET
2	LEGEND (SOIL & ROCK)
3	SITE PLAN
4	PROFILE
5-6	BORE LOGS

CAUTION NOTICE

THE SUBSURFACE INFORMATION AND THE SUBSURFACE INVESTIGATION ON WHICH IT IS BASED WERE MADE FOR THE PURPOSE OF STUDY, PLANNING AND DESIGN, AND NOT FOR CONSTRUCTION OR PAY PURPOSES. THE VARIOUS FIELD BORING LOGS, ROCK CORES AND SOIL TEST DATA AVAILABLE MAY BE REVIEWED OR INSPECTED IN RALEIGH BY CONTACTING THE N. C. DEPARTMENT OF TRANSPORTATION, GEOTECHNICAL ENGINEERING UNIT AT (919) 707-6850. THE SUBSURFACE PLANS AND REPORTS, FIELD BORING LOGS, ROCK CORES AND SOIL TEST DATA ARE NOT PART OF THE CONTRACT.

GENERAL SOIL AND ROCK STRATA DESCRIPTIONS AND INDICATED BOUNDARIES ARE BASED ON A GEOTECHNICAL INTERPRETATION OF ALL AVAILABLE SUBSURFACE DATA AND MAY NOT NECESSARILY REFLECT THE ACTUAL SUBSURFACE CONDITIONS BETWEEN BORINGS OR BETWEEN SAMPLED STRATA WITHIN THE BOREHOLE. THE LABORATORY SAMPLE DATA AND THE IN SITU (IN-PLACE) TEST DATA CAN BE RELIED ON ONLY TO THE DEGREE OF RELIABILITY INHERENT IN THE STANDARD TEST METHOD. THE OBSERVED WATER LEVELS OR SOIL MOISTURE CONDITIONS INDICATED IN THE SUBSURFACE INVESTIGATIONS ARE AS RECORDED AT THE TIME OF THE INVESTIGATION. THESE WATER LEVELS OR SOIL MOISTURE CONDITIONS MAY VARY CONSIDERABLY WITH TIME ACCORDING TO CLIMATIC CONDITIONS INCLUDING TEMPERATURES, PRECIPITATION AND WIND, AS WELL AS OTHER NON-CLIMATIC FACTORS.

THE BIDDER OR CONTRACTOR IS CAUTIONED THAT DETAILS SHOWN ON THE SUBSURFACE PLANS ARE PRELIMINARY ONLY AND IN MANY CASES THE FINAL DESIGN DETAILS ARE DIFFERENT. FOR BIDDING AND CONSTRUCTION PURPOSES, REFER TO THE CONSTRUCTION PLANS AND DOCUMENTS FOR FINAL DESIGN INFORMATION ON THIS PROJECT. THE DEPARTMENT DOES NOT WARRANT OR GUARANTEE THE SUFFICIENCY OR ACCURACY OF THE INVESTIGATION MADE, NOR THE INTERPRETATIONS MADE, OR OPINION OF THE DEPARTMENT AS TO THE TYPE OF MATERIALS AND CONDITIONS TO BE ENCOUNTERED. THE BIDDER OR CONTRACTOR IS CAUTIONED TO MAKE SUCH INDEPENDENT SUBSURFACE INVESTIGATIONS AS HE DEEMS NECESSARY TO SATISFY HIMSELF AS TO CONDITIONS TO BE ENCOUNTERED ON THE PROJECT. THE CONTRACTOR SHALL HAVE NO CLAIM FOR ADDITIONAL COMPENSATION OR FOR AN EXTENSION OF TIME FOR ANY REASON RESULTING FROM THE ACTUAL CONDITIONS ENCOUNTERED AT THE SITE DIFFERING FROM THOSE INDICATED IN THE SUBSURFACE INFORMATION.

NOTES:
1. THE INFORMATION CONTAINED HEREIN IS NOT IMPLIED OR GUARANTEED BY THE N. C. DEPARTMENT OF TRANSPORTATION AS ACCURATE NOR IS IT CONSIDERED PART OF THE PLANS, SPECIFICATIONS OR CONTRACT FOR THE PROJECT.
2. BY HAVING REQUESTED THIS INFORMATION, THE CONTRACTOR SPECIFICALLY WAIVES ANY CLAIMS FOR INCREASED COMPENSATION OR EXTENSION OF TIME BASED ON DIFFERENCES BETWEEN THE CONDITIONS INDICATED HEREIN AND THE ACTUAL CONDITIONS AT THE PROJECT SITE.

PERSONNEL

C.J. CORNETTE

S.N. ZIMARINO

R.E. SMITH

J.M. EDMONDSON

R.E. CLARKE

INVESTIGATED BY T.C. BOTTOMS

DRAWN BY S.N. ZIMARINO

CHECKED BY D.N. ARGENBRIGHT

SUBMITTED BY D.N. ARGENBRIGHT

DATE JULY 2018

DocuSigned by:
Tyler Bottoms 10/17/2018
48A2D3BD08CF4A6...
SIGNATURE DATE

DOCUMENT NOT CONSIDERED FINAL UNLESS ALL SIGNATURES COMPLETED

PROJECT REFERENCE NO.	SHEET NO.
B-4605	2

NORTH CAROLINA DEPARTMENT OF TRANSPORTATION
DIVISION OF HIGHWAYS
GEOTECHNICAL ENGINEERING UNIT

SUBSURFACE INVESTIGATION

SOIL AND ROCK LEGEND, TERMS, SYMBOLS, AND ABBREVIATIONS

SOIL DESCRIPTION

SOIL IS CONSIDERED UNCONSOLIDATED, SEMI-CONSOLIDATED, OR WEATHERED EARTH MATERIALS THAT CAN BE PENETRATED WITH A CONTINUOUS FLIGHT POWER AUGER AND YIELD LESS THAN 100 BLOWS PER FOOT ACCORDING TO THE STANDARD PENETRATION TEST (AASHTO T 206, ASTM D1586). SOIL CLASSIFICATION IS BASED ON THE AASHTO SYSTEM. BASIC DESCRIPTIONS GENERALLY INCLUDE THE FOLLOWING: CONSISTENCY, COLOR, TEXTURE, MOISTURE, AASHTO CLASSIFICATION, AND OTHER PERTINENT FACTORS SUCH AS MINERALOGICAL COMPOSITION, ANGULARITY, STRUCTURE, PLASTICITY, ETC. FOR EXAMPLE,
VERY STIFF, GRAY, SILTY CLAY, MOIST WITH INTERBEDDED FINE SAND LAYERS, HIGHLY PLASTIC, A-7-6

SOIL LEGEND AND AASHTO CLASSIFICATION

GENERAL CLASS.	GRANULAR MATERIALS (≤ 35% PASSING #200)							SILT-CLAY MATERIALS (> 35% PASSING #200)				ORGANIC MATERIALS		
GROUP CLASS.	A-1		A-3	A-2				A-4	A-5	A-6	A-7	A-1, A-2 A-3	A-4, A-5 A-6, A-7	
	A-1-a	A-1-b		A-2-4	A-2-5	A-2-6	A-2-7				A-7-5 A-7-6			
SYMBOL														
% PASSING #10	50 MX											GRANULAR SOILS	SILT-CLAY SOILS	MUCK, PEAT
#40	30 MX	50 MX	51 MN											
#200	15 MX	25 MX	10 MX	35 MX	35 MX	35 MX	35 MX	36 MN	36 MN	36 MN	36 MN			
MATERIAL PASSING #40 LL	—		—	40 MX	41 MN	40 MX	41 MN	40 MX	41 MN	40 MX	41 MN	SOILS WITH LITTLE OR MODERATE AMOUNTS OF ORGANIC MATTER		HIGHLY ORGANIC SOILS
PI	6 MX		NP	10 MX	10 MX	11 MN	11 MN	10 MX	10 MX	11 MN	11 MN			
GROUP INDEX	0		0	0		4 MX		8 MX	12 MX	16 MX	NO MX			
USUAL TYPES OF MAJOR MATERIALS	STONE FRAGS. GRAVEL, AND SAND		FINE SAND	SILTY OR CLAYEY GRAVEL AND SAND				SILTY SOILS		CLAYEY SOILS				
GEN. RATING AS SUBGRADE	EXCELLENT TO GOOD							FAIR TO POOR				FAIR TO POOR	POOR	UNSUITABLE

PI OF A-7-5 SUBGROUP IS ≤ LL - 30 ; PI OF A-7-6 SUBGROUP IS > LL - 30

CONSISTENCY OR DENSENESS

PRIMARY SOIL TYPE	COMPACTNESS OR CONSISTENCY	RANGE OF STANDARD PENETRATION RESISTENCE (N-VALUE)	RANGE OF UNCONFINED COMPRESSIVE STRENGTH ($TONS/FT^2$)
GENERALLY GRANULAR MATERIAL (NON-COHESIVE)	VERY LOOSE LOOSE MEDIUM DENSE DENSE VERY DENSE	< 4 4 TO 10 10 TO 30 30 TO 50 > 50	N/A
GENERALLY SILT-CLAY MATERIAL (COHESIVE)	VERY SOFT SOFT MEDIUM STIFF STIFF VERY STIFF HARD	< 2 2 TO 4 4 TO 8 8 TO 15 15 TO 30 > 30	< 0.25 0.25 TO 0.5 0.5 TO 1.0 1 TO 2 2 TO 4 > 4

TEXTURE OR GRAIN SIZE

U.S. STD. SIEVE SIZE	4	10	40	60	200	270
OPENING (MM)	4.76	2.00	0.42	0.25	0.075	0.053

BOULDER (BLDR.)	COBBLE (COB.)	GRAVEL (GR.)	COARSE SAND (CSE. SD.)	FINE SAND (F SD.)	SILT (SL.)	CLAY (CL.)

GRAIN SIZE MM: 305 | 75 | 2.0 | 0.25 | 0.05 | 0.005
GRAIN SIZE IN.: 12 | 3

SOIL MOISTURE - CORRELATION OF TERMS

SOIL MOISTURE SCALE (ATTERBERG LIMITS)	FIELD MOISTURE DESCRIPTION	GUIDE FOR FIELD MOISTURE DESCRIPTION
	- SATURATED - (SAT.)	USUALLY LIQUID; VERY WET, USUALLY FROM BELOW THE GROUND WATER TABLE
LL — LIQUID LIMIT PLASTIC RANGE (PI) PL — PLASTIC LIMIT	- WET - (W)	SEMISOLID; REQUIRES DRYING TO ATTAIN OPTIMUM MOISTURE
OM — OPTIMUM MOISTURE SL — SHRINKAGE LIMIT	- MOIST - (M)	SOLID; AT OR NEAR OPTIMUM MOISTURE
	- DRY - (D)	REQUIRES ADDITIONAL WATER TO ATTAIN OPTIMUM MOISTURE

PLASTICITY

	PLASTICITY INDEX (PI)	DRY STRENGTH
NON PLASTIC	0-5	VERY LOW
SLIGHTLY PLASTIC	6-15	SLIGHT
MODERATELY PLASTIC	16-25	MEDIUM
HIGHLY PLASTIC	26 OR MORE	HIGH

COLOR

DESCRIPTIONS MAY INCLUDE COLOR OR COLOR COMBINATIONS (TAN, RED, YELLOW-BROWN, BLUE-GRAY). MODIFIERS SUCH AS LIGHT, DARK, STREAKED, ETC. ARE USED TO DESCRIBE APPEARANCE.

GRADATION

WELL GRADED - INDICATES A GOOD REPRESENTATION OF PARTICLE SIZES FROM FINE TO COARSE.
UNIFORMLY GRADED - INDICATES THAT SOIL PARTICLES ARE ALL APPROXIMATELY THE SAME SIZE.
GAP-GRADED - INDICATES A MIXTURE OF UNIFORM PARTICLE SIZES OF TWO OR MORE SIZES.

ANGULARITY OF GRAINS

THE ANGULARITY OR ROUNDNESS OF SOIL GRAINS IS DESIGNATED BY THE TERMS: ANGULAR, SUBANGULAR, SUBROUNDED, OR ROUNDED.

MINERALOGICAL COMPOSITION

MINERAL NAMES SUCH AS QUARTZ, FELDSPAR, MICA, TALC, KAOLIN, ETC. ARE USED IN DESCRIPTIONS WHEN THEY ARE CONSIDERED OF SIGNIFICANCE.

COMPRESSIBILITY

SLIGHTLY COMPRESSIBLE	LL < 31
MODERATELY COMPRESSIBLE	LL = 31 - 50
HIGHLY COMPRESSIBLE	LL > 50

PERCENTAGE OF MATERIAL

ORGANIC MATERIAL	GRANULAR SOILS	SILT - CLAY SOILS	OTHER MATERIAL	
TRACE OF ORGANIC MATTER	2 - 3%	3 - 5%	TRACE	1 - 10%
LITTLE ORGANIC MATTER	3 - 5%	5 - 12%	LITTLE	10 - 20%
MODERATELY ORGANIC	5 - 10%	12 - 20%	SOME	20 - 35%
HIGHLY ORGANIC	> 10%	> 20%	HIGHLY	35% AND ABOVE

GROUND WATER

- WATER LEVEL IN BORE HOLE IMMEDIATELY AFTER DRILLING
- STATIC WATER LEVEL AFTER 24 HOURS
- PW PERCHED WATER, SATURATED ZONE, OR WATER BEARING STRATA
- SPRING OR SEEP

MISCELLANEOUS SYMBOLS

- ROADWAY EMBANKMENT (RE) WITH SOIL DESCRIPTION
- SOIL SYMBOL
- ARTIFICIAL FILL (AF) OTHER THAN ROADWAY EMBANKMENT
- INFERRED SOIL BOUNDARY
- INFERRED ROCK LINE
- ALLUVIAL SOIL BOUNDARY
- 25/025 DIP & DIP DIRECTION OF ROCK STRUCTURES
- SPT DPT DMT VST PMT TEST BORING
- AUGER BORING
- CORE BORING
- MW MONITORING WELL
- PIEZOMETER INSTALLATION
- SLOPE INDICATOR INSTALLATION
- CONE PENETROMETER TEST
- SOUNDING ROD
- TEST BORING WITH CORE
- SPT N-VALUE

RECOMMENDATION SYMBOLS

- UNDERCUT
- SHALLOW UNDERCUT
- UNCLASSIFIED EXCAVATION - UNSUITABLE WASTE
- UNCLASSIFIED EXCAVATION - ACCEPTABLE DEGRADABLE ROCK
- UNCLASSIFIED EXCAVATION - ACCEPTABLE, BUT NOT TO BE USED IN THE TOP 3 FEET OF EMBANKMENT OR BACKFILL

ABBREVIATIONS

AR - AUGER REFUSAL
BT - BORING TERMINATED
CL. - CLAY
CPT - CONE PENETRATION TEST
CSE. - COARSE
DMT - DILATOMETER TEST
DPT - DYNAMIC PENETRATION TEST
e - VOID RATIO
F - FINE
FOSS. - FOSSILIFEROUS
FRAC. - FRACTURED, FRACTURES
FRAGS. - FRAGMENTS
HI. - HIGHLY
MED. - MEDIUM
MICA. - MICACEOUS
MOD. - MODERATELY
NP - NON PLASTIC
ORG. - ORGANIC
PMT - PRESSUREMETER TEST
SAP. - SAPROLITIC
SD. - SAND, SANDY
SL. - SILT, SILTY
SLI. - SLIGHTLY
TCR - TRICONE REFUSAL
w - MOISTURE CONTENT
V - VERY
VST - VANE SHEAR TEST
WEA. - WEATHERED
γ - UNIT WEIGHT
γ_d - DRY UNIT WEIGHT

SAMPLE ABBREVIATIONS
S - BULK
SS - SPLIT SPOON
ST - SHELBY TUBE
RS - ROCK
RT - RECOMPACTED TRIAXIAL
CBR - CALIFORNIA BEARING RATIO

EQUIPMENT USED ON SUBJECT PROJECT

DRILL UNITS:
- [X] CME-45C
- [ ] CME-55
- [ ] CME-550
- [ ] VANE SHEAR TEST
- [ ] PORTABLE HOIST
- [ ] _____
- [ ] _____

ADVANCING TOOLS:
- [ ] CLAY BITS
- [ ] 6" CONTINUOUS FLIGHT AUGER
- [ ] 8" HOLLOW AUGERS
- [ ] HARD FACED FINGER BITS
- [ ] TUNG.-CARBIDE INSERTS
- [X] CASING [ ] W/ ADVANCER
- [X] TRICONE 2 15/16" STEEL TEETH
- [ ] TRICONE ____" TUNG.-CARB.
- [ ] CORE BIT
- [ ] _____

HAMMER TYPE:
- [X] AUTOMATIC [ ] MANUAL

CORE SIZE:
- [ ] -B _____ [ ] -H _____
- [ ] -N _____

HAND TOOLS:
- [ ] POST HOLE DIGGER
- [ ] HAND AUGER
- [ ] SOUNDING ROD
- [ ] VANE SHEAR TEST
- [ ] _____

ROCK DESCRIPTION

HARD ROCK IS NON-COASTAL PLAIN MATERIAL THAT WOULD YIELD SPT REFUSAL IF TESTED. AN INFERRED ROCK LINE INDICATES THE LEVEL AT WHICH NON-COASTAL PLAIN MATERIAL WOULD YIELD SPT REFUSAL. SPT REFUSAL IS PENETRATION BY A SPLIT SPOON SAMPLER EQUAL TO OR LESS THAN 0.1 FOOT PER 60 BLOWS IN NON-COASTAL PLAIN MATERIAL. THE TRANSITION BETWEEN SOIL AND ROCK IS OFTEN REPRESENTED BY A ZONE OF WEATHERED ROCK.
ROCK MATERIALS ARE TYPICALLY DIVIDED AS FOLLOWS:

WEATHERED ROCK (WR)	NON-COASTAL PLAIN MATERIAL THAT WOULD YIELD SPT N VALUES > 100 BLOWS PER FOOT IF TESTED.
CRYSTALLINE ROCK (CR)	FINE TO COARSE GRAIN IGNEOUS AND METAMORPHIC ROCK THAT WOULD YIELD SPT REFUSAL IF TESTED. ROCK TYPE INCLUDES GRANITE, GNEISS, GABBRO, SCHIST, ETC.
NON-CRYSTALLINE ROCK (NCR)	FINE TO COARSE GRAIN METAMORPHIC AND NON-COASTAL PLAIN SEDIMENTARY ROCK THAT WOULD YEILD SPT REFUSAL IF TESTED. ROCK TYPE INCLUDES PHYLLITE, SLATE, SANDSTONE, ETC.
COASTAL PLAIN SEDIMENTARY ROCK (CP)	COASTAL PLAIN SEDIMENTS CEMENTED INTO ROCK, BUT MAY NOT YIELD SPT REFUSAL. ROCK TYPE INCLUDES LIMESTONE, SANDSTONE, CEMENTED SHELL BEDS, ETC.

WEATHERING

FRESH	ROCK FRESH, CRYSTALS BRIGHT, FEW JOINTS MAY SHOW SLIGHT STAINING. ROCK RINGS UNDER HAMMER IF CRYSTALLINE.
VERY SLIGHT (V SLI.)	ROCK GENERALLY FRESH, JOINTS STAINED, SOME JOINTS MAY SHOW THIN CLAY COATINGS IF OPEN, CRYSTALS ON A BROKEN SPECIMEN FACE SHINE BRIGHTLY. ROCK RINGS UNDER HAMMER BLOWS IF OF A CRYSTALLINE NATURE.
SLIGHT (SLI.)	ROCK GENERALLY FRESH, JOINTS STAINED AND DISCOLORATION EXTENDS INTO ROCK UP TO 1 INCH. OPEN JOINTS MAY CONTAIN CLAY. IN GRANITOID ROCKS SOME OCCASIONAL FELDSPAR CRYSTALS ARE DULL AND DISCOLORED. CRYSTALLINE ROCKS RING UNDER HAMMER BLOWS.
MODERATE (MOD.)	SIGNIFICANT PORTIONS OF ROCK SHOW DISCOLORATION AND WEATHERING EFFECTS. IN GRANITOID ROCKS, MOST FELDSPARS ARE DULL AND DISCOLORED, SOME SHOW CLAY. ROCK HAS DULL SOUND UNDER HAMMER BLOWS AND SHOWS SIGNIFICANT LOSS OF STRENGTH AS COMPARED WITH FRESH ROCK.
MODERATELY SEVERE (MOD. SEV.)	ALL ROCK EXCEPT QUARTZ DISCOLORED OR STAINED. IN GRANITOID ROCKS, ALL FELDSPARS DULL AND DISCOLORED AND A MAJORITY SHOW KAOLINIZATION. ROCK SHOWS SEVERE LOSS OF STRENGTH AND CAN BE EXCAVATED WITH A GEOLOGIST'S PICK. ROCK GIVES "CLUNK" SOUND WHEN STRUCK. *IF TESTED, WOULD YIELD SPT REFUSAL*
SEVERE (SEV.)	ALL ROCK EXCEPT QUARTZ DISCOLORED OR STAINED. ROCK FABRIC CLEAR AND EVIDENT BUT REDUCED IN STRENGTH TO STRONG SOIL. IN GRANITOID ROCKS ALL FELDSPARS ARE KAOLINIZED TO SOME EXTENT. SOME FRAGMENTS OF STRONG ROCK USUALLY REMAIN. *IF TESTED, WOULD YIELD SPT N VALUES > 100 BPF*
VERY SEVERE (V SEV.)	ALL ROCK EXCEPT QUARTZ DISCOLORED OR STAINED. ROCK FABRIC ELEMENTS ARE DISCERNIBLE BUT MASS IS EFFECTIVELY REDUCED TO SOIL STATUS, WITH ONLY FRAGMENTS OF STRONG ROCK REMAINING. SAPROLITE IS AN EXAMPLE OF ROCK WEATHERED TO A DEGREE THAT ONLY MINOR VESTIGES OF ORIGINAL ROCK FABRIC REMAIN. *IF TESTED, WOULD YIELD SPT N VALUES < 100 BPF*
COMPLETE	ROCK REDUCED TO SOIL. ROCK FABRIC NOT DISCERNIBLE, OR DISCERNIBLE ONLY IN SMALL AND SCATTERED CONCENTRATIONS. QUARTZ MAY BE PRESENT AS DIKES OR STRINGERS. SAPROLITE IS ALSO AN EXAMPLE.

ROCK HARDNESS

VERY HARD	CANNOT BE SCRATCHED BY KNIFE OR SHARP PICK. BREAKING OF HAND SPECIMENS REQUIRES SEVERAL HARD BLOWS OF THE GEOLOGIST'S PICK.
HARD	CAN BE SCRATCHED BY KNIFE OR PICK ONLY WITH DIFFICULTY. HARD HAMMER BLOWS REQUIRED TO DETACH HAND SPECIMEN.
MODERATELY HARD	CAN BE SCRATCHED BY KNIFE OR PICK. GOUGES OR GROOVES TO 0.25 INCHES DEEP CAN BE EXCAVATED BY HARD BLOW OF A GEOLOGIST'S PICK. HAND SPECIMENS CAN BE DETACHED BY MODERATE BLOWS.
MEDIUM HARD	CAN BE GROOVED OR GOUGED 0.05 INCHES DEEP BY FIRM PRESSURE OF KNIFE OR PICK POINT. CAN BE EXCAVATED IN SMALL CHIPS TO PEICES 1 INCH MAXIMUM SIZE BY HARD BLOWS OF THE POINT OF A GEOLOGIST'S PICK.
SOFT	CAN BE GROVED OR GOUGED READILY BY KNIFE OR PICK. CAN BE EXCAVATED IN FRAGMENTS FROM CHIPS TO SEVERAL INCHES IN SIZE BY MODERATE BLOWS OF A PICK POINT. SMALL, THIN PIECES CAN BE BROKEN BY FINGER PRESSURE.
VERY SOFT	CAN BE CARVED WITH KNIFE. CAN BE EXCAVATED READILY WITH POINT OF PICK. PIECES 1 INCH OR MORE IN THICKNESS CAN BE BROKEN BY FINGER PRESSURE. CAN BE SCRATCHED READILY BY FINGERNAIL.

FRACTURE SPACING

TERM	SPACING
VERY WIDE	MORE THAN 10 FEET
WIDE	3 TO 10 FEET
MODERATELY CLOSE	1 TO 3 FEET
CLOSE	0.16 TO 1 FOOT
VERY CLOSE	LESS THAN 0.16 FEET

BEDDING

TERM	THICKNESS
VERY THICKLY BEDDED	4 FEET
THICKLY BEDDED	1.5 - 4 FEET
THINLY BEDDED	0.16 - 1.5 FEET
VERY THINLY BEDDED	0.03 - 0.16 FEET
THICKLY LAMINATED	0.008 - 0.03 FEET
THINLY LAMINATED	< 0.008 FEET

INDURATION

FOR SEDIMENTARY ROCKS, INDURATION IS THE HARDENING OF MATERIAL BY CEMENTING, HEAT, PRESSURE, ETC.

FRIABLE	RUBBING WITH FINGER FREES NUMEROUS GRAINS; GENTLE BLOW BY HAMMER DISINTEGRATES SAMPLE.
MODERATELY INDURATED	GRAINS CAN BE SEPARATED FROM SAMPLE WITH STEEL PROBE; BREAKS EASILY WHEN HIT WITH HAMMER.
INDURATED	GRAINS ARE DIFFICULT TO SEPARATE WITH STEEL PROBE; DIFFICULT TO BREAK WITH HAMMER.
EXTREMELY INDURATED	SHARP HAMMER BLOWS REQUIRED TO BREAK SAMPLE; SAMPLE BREAKS ACROSS GRAINS.

TERMS AND DEFINITIONS

ALLUVIUM (ALLUV.) - SOILS THAT HAVE BEEN TRANSPORTED BY WATER.

AQUIFER - A WATER BEARING FORMATION OR STRATA.

ARENACEOUS - APPLIED TO ROCKS THAT HAVE BEEN DERIVED FROM SAND OR THAT CONTAIN SAND.

ARGILLACEOUS - APPLIED TO ALL ROCKS OR SUBSTANCES COMPOSED OF CLAY MINERALS, OR HAVING A NOTABLE PROPORTION OF CLAY IN THEIR COMPOSITION, SUCH AS SHALE, SLATE, ETC.

ARTESIAN - GROUND WATER THAT IS UNDER SUFFICIENT PRESSURE TO RISE ABOVE THE LEVEL AT WHICH IT IS ENCOUNTERED, BUT WHICH DOES NOT NECESSARILY RISE TO OR ABOVE THE GROUND SURFACE.

CALCAREOUS (CALC.) - SOILS THAT CONTAIN APPRECIABLE AMOUNTS OF CALCIUM CARBONATE.

COLLUVIUM - ROCK FRAGMENTS MIXED WITH SOIL DEPOSITED BY GRAVITY ON SLOPE OR AT BOTTOM OF SLOPE.

CORE RECOVERY (REC.) - TOTAL LENGTH OF ALL MATERIAL RECOVERED IN THE CORE BARREL DIVIDED BY TOTAL LENGTH OF CORE RUN AND EXPRESSED AS A PERCENTAGE.

DIKE - A TABULAR BODY OF IGNEOUS ROCK THAT CUTS ACROSS THE STRUCTURE OF ADJACENT ROCKS OR CUTS MASSIVE ROCK.

DIP - THE ANGLE AT WHICH A STRATUM OR ANY PLANAR FEATURE IS INCLINED FROM THE HORIZONTAL.

DIP DIRECTION (DIP AZIMUTH) - THE DIRECTION OR BEARING OF THE HORIZONTAL TRACE OF THE LINE OF DIP, MEASURED CLOCKWISE FROM NORTH.

FAULT - A FRACTURE OR FRACTURE ZONE ALONG WHICH THERE HAS BEEN DISPLACEMENT OF THE SIDES RELATIVE TO ONE ANOTHER PARALLEL TO THE FRACTURE.

FISSILE - A PROPERTY OF SPLITTING ALONG CLOSELY SPACED PARALLEL PLANES.

FLOAT - ROCK FRAGMENTS ON SURFACE NEAR THEIR ORIGINAL POSITION AND DISLODGED FROM PARENT MATERIAL.

FLOOD PLAIN (FP) - LAND BORDERING A STREAM, BUILT OF SEDIMENTS DEPOSITED BY THE STREAM.

FORMATION (FM.) - A MAPPABLE GEOLOGIC UNIT THAT CAN BE RECOGNIZED AND TRACED IN THE FIELD.

JOINT - FRACTURE IN ROCK ALONG WHICH NO APPRECIABLE MOVEMENT HAS OCCURRED.

LEDGE - A SHELF-LIKE RIDGE OR PROJECTION OF ROCK WHOSE THICKNESS IS SMALL COMPARED TO ITS LATERAL EXTENT.

LENS - A BODY OF SOIL OR ROCK THAT THINS OUT IN ONE OR MORE DIRECTIONS.

MOTTLED (MOT.) - IRREGULARLY MARKED WITH SPOTS OF DIFFERENT COLORS. MOTTLING IN SOILS USUALLY INDICATES POOR AERATION AND LACK OF GOOD DRAINAGE.

PERCHED WATER - WATER MAINTAINED ABOVE THE NORMAL GROUND WATER LEVEL BY THE PRESENCE OF AN INTERVENING IMPERVIOUS STRATUM.

RESIDUAL (RES.) SOIL - SOIL FORMED IN PLACE BY THE WEATHERING OF ROCK.

ROCK QUALITY DESIGNATION (RQD) - A MEASURE OF ROCK QUALITY DESCRIBED BY TOTAL LENGTH OF ROCK SEGMENTS EQUAL TO OR GREATER THAN 4 INCHES DIVIDED BY THE TOTAL LENGTH OF CORE RUN AND EXPRESSED AS A PERCENTAGE.

SAPROLITE (SAP.) - RESIDUAL SOIL THAT RETAINS THE RELIC STRUCTURE OR FABRIC OF THE PARENT ROCK.

SILL - AN INTRUSIVE BODY OF IGNEOUS ROCK OF APPROXIMATELY UNIFORM THICKNESS AND RELATIVELY THIN COMPARED WITH ITS LATERAL EXTENT, THAT HAS BEEN EMPLACED PARALLEL TO THE BEDDING OR SCHISTOSITY OF THE INTRUDED ROCKS.

SLICKENSIDE - POLISHED AND STRIATED SURFACE THAT RESULTS FROM FRICTION ALONG A FAULT OR SLIP PLANE.

STANDARD PENETRATION TEST (PENETRATION RESISTANCE) (SPT) - NUMBER OF BLOWS (N OR BPF) OF A 140 LB. HAMMER FALLING 30 INCHES REQUIRED TO PRODUCE A PENETRATION OF 1 FOOT INTO SOIL WITH A 2 INCH OUTSIDE DIAMETER SPLIT SPOON SAMPLER. SPT REFUSAL IS PENETRATION EQUAL TO OR LESS THAN 0.1 FOOT PER 60 BLOWS.

STRATA CORE RECOVERY (SREC.) - TOTAL LENGTH OF STRATA MATERIAL RECOVERED DIVIDED BY TOTAL LENGTH OF STRATUM AND EXPRESSED AS A PERCENTAGE.

STRATA ROCK QUALITY DESIGNATION (SRQD) - A MEASURE OF ROCK QUALITY DESCRIBED BY TOTAL LENGTH OF ROCK SEGMENTS WITHIN A STRATUM EQUAL TO OR GREATER THAN 4 INCHES DIVIDED BY THE TOTAL LENGTH OF STRATA AND EXPRESSED AS A PERCENTAGE.

TOPSOIL (TS.) - SURFACE SOILS USUALLY CONTAINING ORGANIC MATTER.

BENCH MARK: BL-3

N: 658492.4540 E: 2532384.3740 ELEVATION: 20.46 FEET

NOTES:

DATE: 8-15-14

PROJECT REFERENCE NO.	SHEET NO.
B-4605	3

SITE PLAN

0 30 60
FEET

SKEW = 90°

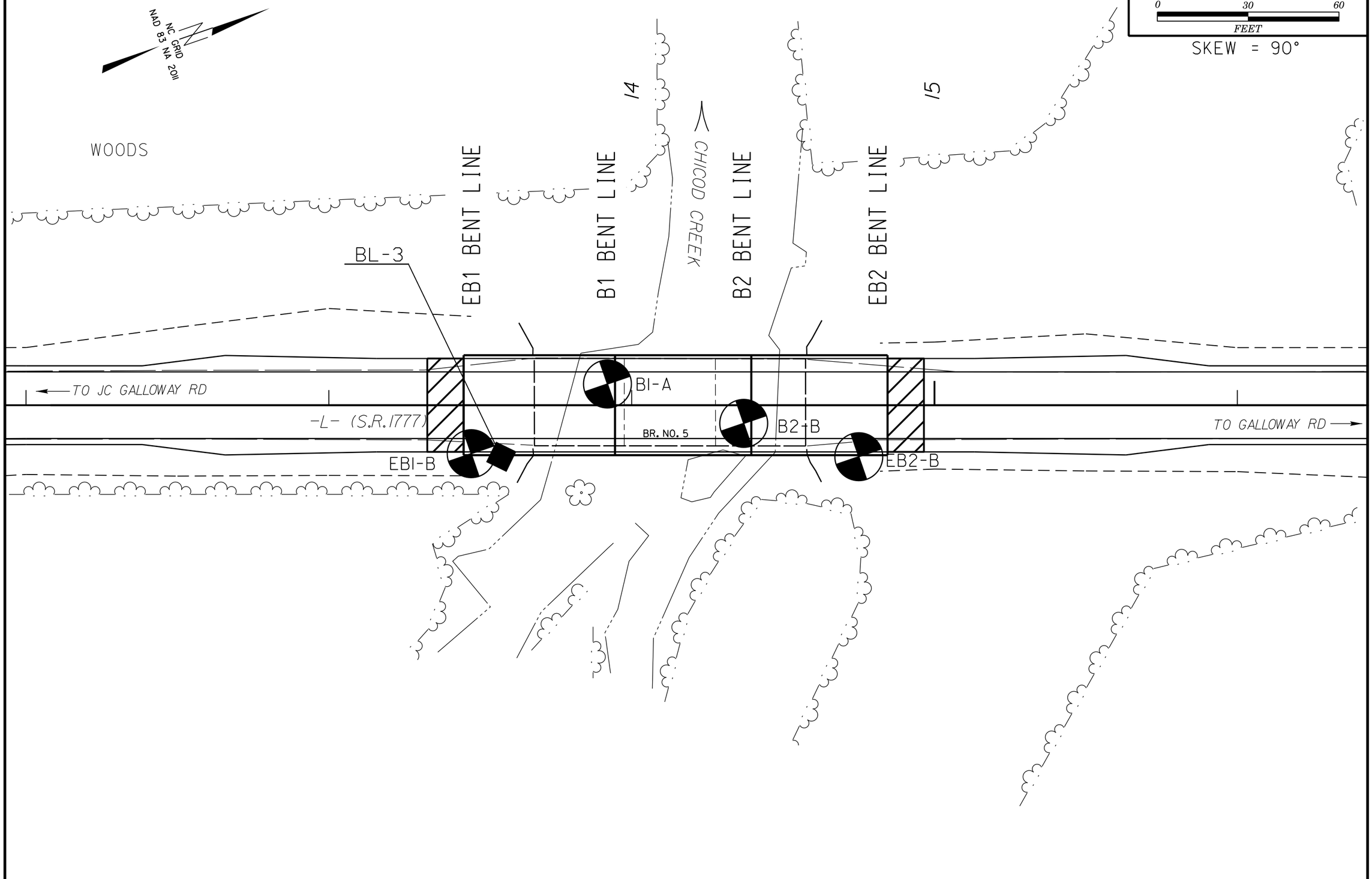

PROJECT REFERENCE NO.	SHEET NO.
B-4605	4
ROADWAY DESIGN ENGINEER	HYDRAULICS ENGINEER

INCOMPLETE PLANS
DO NOT USE FOR R/W ACQUISITION

DOCUMENT NOT CONSIDERED FINAL UNLESS ALL SIGNATURES COMPLETED

PROFILE THROUGH BORINGS PROJECTED ALONG -L-

VE = 2

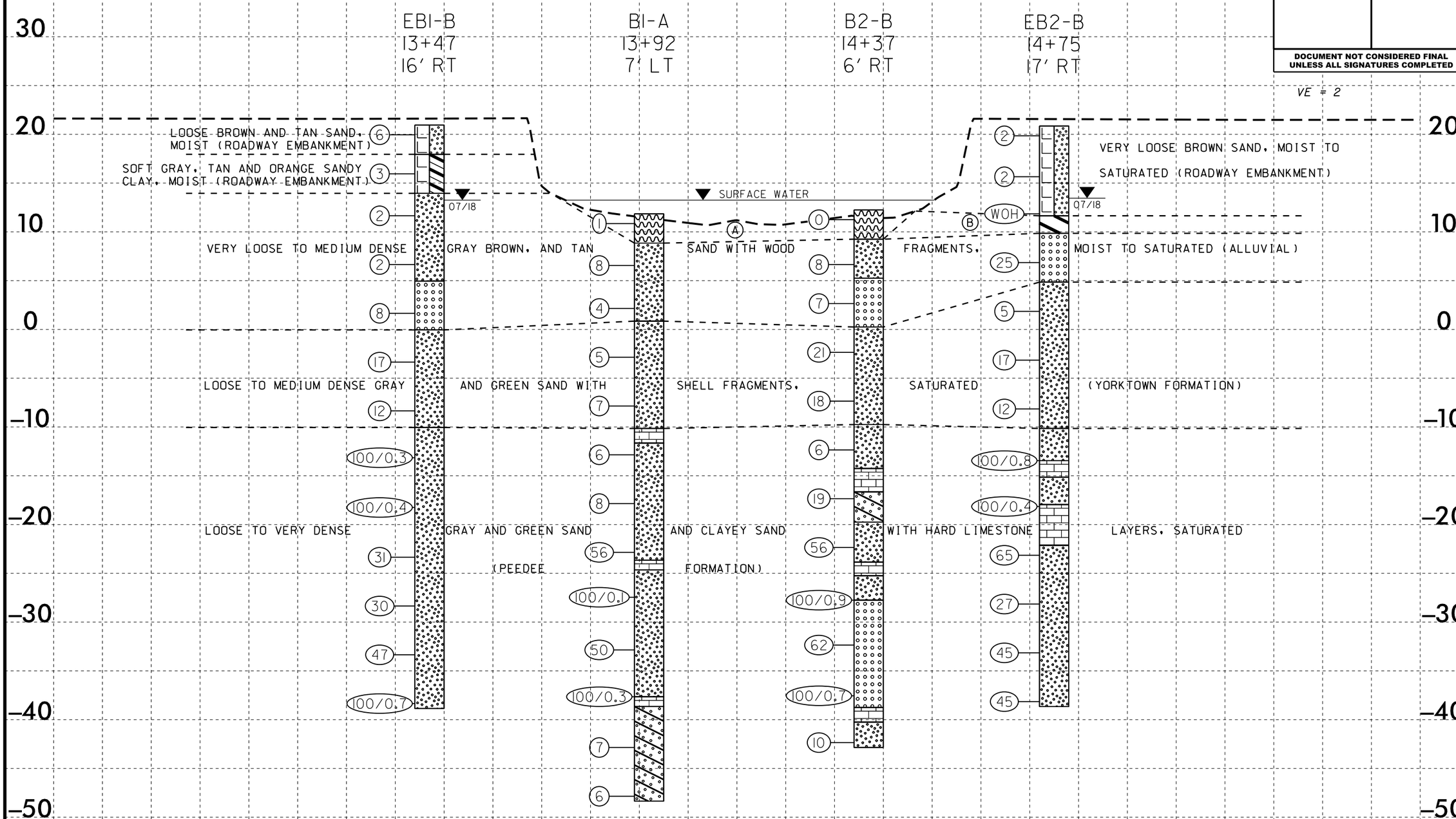

(A) VERY LOOSE BROWN MUCK, SATURATED (ALLUVIAL)
(B) VERY SOFT GRAY SILTY CLAY, WET (ALLUVIAL)

NOTE: GROUNDLINE PROFILE ALONG -L- TAKEN FROM BRIDGE SURVEY AND HYDRAULIC DESIGN REPORT DATED 07/10/18

NOTE: INFERRED STRATIGRAPHY IS DRAWN THROUGH THE BORINGS WITH BOTH PROJECTED ONTO THE PROFILE

13 14 15

5/14/99

23-JUL-2018 15:01
S:\ERD_Greenville Investigation\TIP\B4605_GEO_BRDG0005\CADD_GEOTECH\PlanProf\B4605_GEO_BRDG_PFL.dgn
$$$$USERNAME$$$$

GEOTECHNICAL BORING REPORT
BORE LOG

WBS 17BP.2.R.91	**TIP** B-4605	**COUNTY** PITT	**GEOLOGIST** Zimarino, S. N.
SITE DESCRIPTION BRIDGE NUMBER 5 ON -L- (SR 1777) OVER CHICOD CREEK			**GROUND WTR (ft)**
BORING NO. EB1-B	**STATION** 13+47	**OFFSET** 16 ft RT	**ALIGNMENT** -L- / **0 HR.** N/A
COLLAR ELEV. 21.0 ft	**TOTAL DEPTH** 59.8 ft	**NORTHING** 658,572	**EASTING** 2,532,400 / **24 HR.** 7.7
DRILL RIG/HAMMER EFF./DATE GFO0075 CME-45C 84% 08/21/2017		**DRILL METHOD** Mud Rotary	**HAMMER TYPE** Automatic
DRILLER Smith, R. E.	**START DATE** 07/03/18	**COMP. DATE** 07/03/18	**SURFACE WATER DEPTH** N/A

ELEV (ft)	DRIVE ELEV (ft)	DEPTH (ft)	BLOW COUNT 0.5ft	0.5ft	0.5ft	BLOWS PER FOOT 0 25 50 75 100	SAMP. NO.	MOI	LOG	SOIL AND ROCK DESCRIPTION ELEV. (ft)	DEPTH (ft)
	21.0	0.0	2	3	3	6				GROUND SURFACE	0.0
										ROADWAY EMBANKMENT BROWN AND TAN SAND, MOIST	
	17.0	4.0	1	1	2	3				18.0	3.0
										ROADWAY EMBANKMENT GRAY, TAN, AND ORANGE SANDY CLAY, MOIST	
	12.7	8.3	1	1	1	2				14.0	7.0
										ALLUVIAL GRAY AND BROWN SAND WITH WOOD FRAGMENTS, MOIST TO SATURATED	
	7.7	13.3	1	1	1	2				5.0	16.0
	2.7	18.3	7	5	3	8				0.0	21.0
										COASTAL PLAIN GRAY AND GREEN SAND WITH SHELL FRAGMENTS, SATURATED (YORKTOWN FORMATION)	
	-2.3	23.3	5	6	11	17					
	-7.3	28.3	5	6	6	12				-10.0	31.0
	-12.3	33.3	12	100/0.3		100/0.3				-13.3	34.3
										COASTAL PLAIN GRAY SAND WITH HARD LIMESTONE LAYERS, SATURATED (PEEDEE FORMATION)	
	-17.3	38.3	8	100/0.4		100/0.4					
	-22.3	43.3	5	7	24	31					
	-27.3	48.3	58	15	15	30					
	-32.3	53.3	18	22	25	47					
	-37.3	58.3	52	63	37/0.2	100/0.7				-38.8	59.8
										Boring Terminated at Elevation -38.8 ft in Very Dense Sand	

WBS 17BP.2.R.91	**TIP** B-4605	**COUNTY** PITT	**GEOLOGIST** Zimarino, S. N.
SITE DESCRIPTION BRIDGE NUMBER 5 ON -L- (SR 1777) OVER CHICOD CREEK			**GROUND WTR (ft)**
BORING NO. B1-A	**STATION** 13+92	**OFFSET** 7 ft LT	**ALIGNMENT** -L- / **0 HR.** N/A
COLLAR ELEV. 11.9 ft	**TOTAL DEPTH** 60.2 ft	**NORTHING** 658,483	**EASTING** 2,532,380 / **24 HR.** N/A
DRILL RIG/HAMMER EFF./DATE GFO0075 CME-45C 84% 08/21/2017		**DRILL METHOD** Mud Rotary	**HAMMER TYPE** Automatic
DRILLER Smith, R. E.	**START DATE** 07/02/18	**COMP. DATE** 07/02/18	**SURFACE WATER DEPTH** 1.8ft

ELEV (ft)	DRIVE ELEV (ft)	DEPTH (ft)	BLOW COUNT 0.5ft	0.5ft	0.5ft	BLOWS PER FOOT 0 25 50 75 100	SAMP. NO.	MOI	LOG	SOIL AND ROCK DESCRIPTION
										WATER SURFACE (07/02/18)
	11.9	0.0								11.9 GROUND SURFACE 0.0
			1	0	1	1				**ALLUVIAL** BROWN MUCK, SATURATED
										8.9 3.0
	7.6	4.3	3	4	4	8				**ALLUVIAL** GRAY SAND WITH WOOD FRAGMENTS, SATURATED
	3.2	8.7	2	1	3	4				0.9 11.0
	-1.8	13.7	2	2	3	5				**COASTAL PLAIN** GRAY AND GREEN SAND WITH SHELL FRAGMENTS, SATURATED (YORKTOWN FORMATION)
	-6.8	18.7	2	4	3	7				-10.1 22.0
	-11.8	23.7	3	3	3	6				-11.6 23.5
										COASTAL PLAIN GRAY AND GREEN SAND AND CLAYEY SAND WITH HARD LIMESTONE LAYERS, SATURATED (PEEDEE FORMATION)
	-16.8	28.7	1	4	4	8				
	-21.8	33.7	20	16	40	56				-23.6 35.5
										-24.6 36.5
	-26.8	38.7	11	100/0.1		100/0.1				
	-31.8	43.7	23	25	25	50				
	-36.8	48.7	22	100/0.3		100/0.3				-37.6 49.5
										-38.6 50.5
	-41.8	53.7	3	3	4	7				
	-46.8	58.7	3	3	3	6				-48.3 60.2
										Boring Terminated at Elevation -48.3 ft in Very Dense Sand

GEOTECHNICAL BORING REPORT
BORE LOG

WBS 17BP.2.R.91	**TIP** B-4605	**COUNTY** PITT	**GEOLOGIST** Zimarino, S. N.	
SITE DESCRIPTION BRIDGE NUMBER 5 ON -L- (SR 1777) OVER CHICOD CREEK				**GROUND WTR (ft)**
BORING NO. B2-B	**STATION** 14+37	**OFFSET** 6 ft RT	**ALIGNMENT** -L-	**0 HR.** N/A
COLLAR ELEV. 12.3 ft	**TOTAL DEPTH** 55.1 ft	**NORTHING** 658,533	**EASTING** 2,532,373	**24 HR.** N/A
DRILL RIG/HAMMER EFF./DATE GFO0075 CME-45C 84% 08/21/2017		**DRILL METHOD** Mud Rotary	**HAMMER TYPE** Automatic	
DRILLER Smith, R. E.	**START DATE** 06/28/18	**COMP. DATE** 06/28/18	**SURFACE WATER DEPTH** 1.8ft	

ELEV (ft)	DRIVE ELEV (ft)	DEPTH (ft)	BLOW COUNT 0.5ft	0.5ft	0.5ft	BLOWS PER FOOT 0 25 50 75 100	SAMP. NO.	MOI	LOG	SOIL AND ROCK DESCRIPTION ELEV. (ft)	DEPTH (ft)
										WATER SURFACE (06/28/18)	
	12.3	0.0	2	0	0	0				12.3 GROUND SURFACE	0.0
										ALLUVIAL BROWN MUCK, SATURATED	
	7.7	4.6	3	4	4	8				9.3	3.0
										ALLUVIAL GRAY SAND WITH WOOD FRAGMENTS, SATURATED	
	3.7	8.6	5	3	4	7				5.3	7.0
	-1.3	13.6	11	11	10	21				0.3	12.0
										COASTAL PLAIN GRAY AND GREEN SAND WITH SHELL FRAGMENTS, SATURATED (YORKTOWN FORMATION)	
	-6.3	18.6	6	9	9	18				-9.7	22.0
	-11.3	23.6	3	3	3	6				**COASTAL PLAIN** GRAY AND GREEN SAND WITH HARD LIMESTONE LAYERS, SATURATED (PEEDEE FORMATION)	
	-16.3	28.6	58	12	7	19				-14.2	26.5
										-16.6	28.9
	-21.3	33.6	25	46	10	56				-19.7	32.0
										-23.8	36.1
										-25.2	37.5
	-26.3	38.6	12	14	86/0.4	100/0.9				-27.7	40.0
	-31.3	43.6	24	29	33	62					
	-36.3	48.6	9	43	57/0.2	100/0.7				-38.7	51.0
										-40.2	52.5
	-41.3	53.6	4	5	5	10				-42.8	55.1
										Boring Terminated at Elevation -42.8 ft in Medium Dense Sand	

WBS 17BP.2.R.91	**TIP** B-4605	**COUNTY** PITT	**GEOLOGIST** Cornette, C. J.	
SITE DESCRIPTION BRIDGE NUMBER 5 ON -L- (SR 1777) OVER CHICOD CREEK				**GROUND WTR (ft)**
BORING NO. EB2-B	**STATION** 14+75	**OFFSET** 17 ft RT	**ALIGNMENT** -L-	**0 HR.** N/A
COLLAR ELEV. 20.9 ft	**TOTAL DEPTH** 59.5 ft	**NORTHING** 658,604	**EASTING** 2,532,423	**24 HR.** 7.4
DRILL RIG/HAMMER EFF./DATE GFO0075 CME-45C 84% 08/21/2017		**DRILL METHOD** Mud Rotary	**HAMMER TYPE** Automatic	
DRILLER Smith, R. E.	**START DATE** 07/05/18	**COMP. DATE** 07/05/18	**SURFACE WATER DEPTH** N/A	

ELEV (ft)	DRIVE ELEV (ft)	DEPTH (ft)	BLOW COUNT 0.5ft	0.5ft	0.5ft	BLOWS PER FOOT 0 25 50 75 100	SAMP. NO.	MOI	LOG	SOIL AND ROCK DESCRIPTION
	20.9	0.0	1	1	1	2				20.9 GROUND SURFACE 0.0
										ROADWAY EMBANKMENT BROWN SAND, MOIST TO SATURATED
	16.7	4.2	2	1	1	2				
	12.9	8.0	WOH	WOH	WOH	0				11.7 9.2
										ALLUVIAL GRAY SILTY CLAY, WET
	7.9	13.0	7	13	12	25				9.9 11.0
										ALLUVIAL TAN SAND, SATURATED
	2.9	18.0	WOR	1	4	5				4.9 16.0
										COASTAL PLAIN GRAY SAND WITH SHELL FRAGMENTS, SATURATED (YORKTOWN FORMATION)
	-2.1	23.0	6	8	9	17				
	-7.1	28.0	6	7	5	12				
	-12.1	33.0	3	2	98/0.3	100/0.8				-10.1 31.0
										COASTAL PLAIN GRAY SAND WITH HARD LIMESTONE LAYERS, SATURATED (PEEDEE FORMATION)
	-17.1	38.0	2	100/0.4		100/0.4				-13.4 34.3
										-15.1 36.0
										-17.9 38.8
	-22.1	43.0	6	47	18	65				-22.1 43.0
	-27.1	48.0	9	15	12	27				
	-32.1	53.0	34	24	21	45				
	-37.1	58.0	29	21	24	45				-38.6 59.5
										Boring Terminated at Elevation -38.6 ft in Dense Sand