TIP PROJECT: 17BP.2.R.52

CONTRACT:

See Sheet 1-A For Index of Sheets

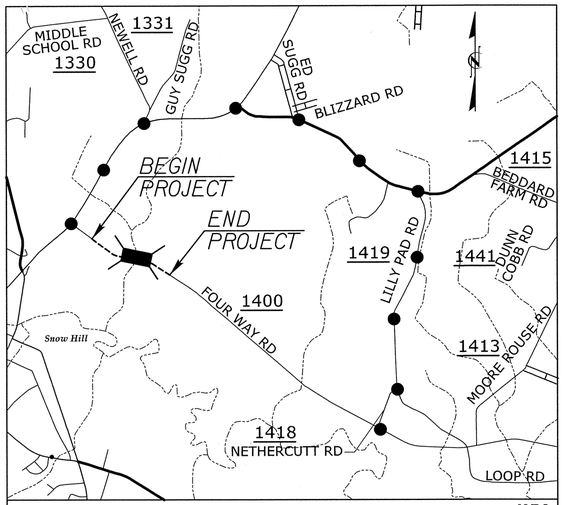

VICINITY MAP ●●● DETOUR ROUTE N.T.S.

STATE OF NORTH CAROLINA
DIVISION OF HIGHWAYS

GREENE COUNTY

STATE	PROJECT REFERENCE NO.	SHEET NO.	TOTAL SHEETS
NC	17BP.2.R.52	1	X

STATE PROJ. NO.	F.A. PROJ. NO.	DESCRIPTION
17BP.2.R.52		CONST.

LOCATION: BRIDGE NO. 040 OVER PANTHER SWAMP ON SR 1400 (FOUR WAY RD.)

TYPE OF WORK: GRADING, PAVING, GUARDRAIL, DRAINAGE & STRUCTURE

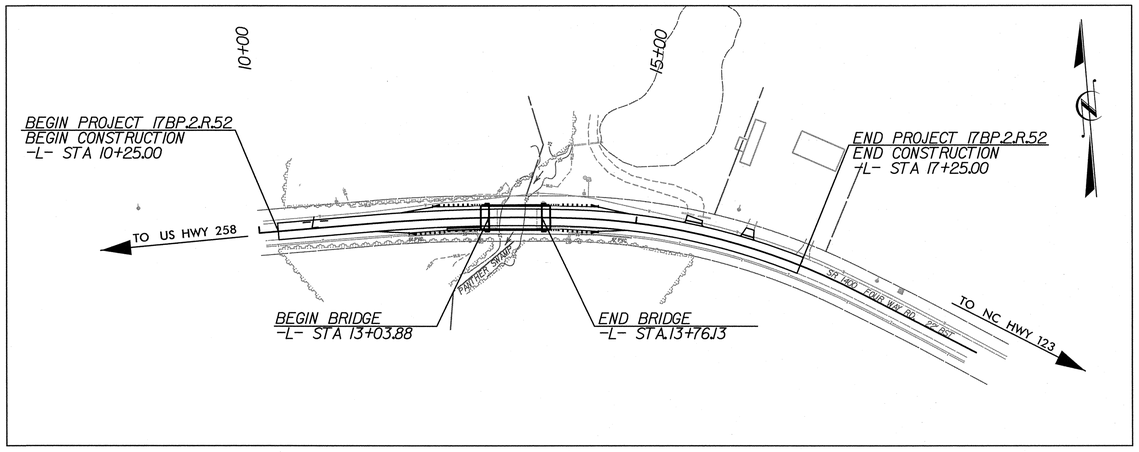

CLEARING ON THIS PROJECT SHALL BE PERFORMED TO THE LIMITS ESTABLISHED BY METHOD II.

GRAPHIC SCALES

50 25 0 50 100
PLANS

50 25 0 50 100
PROFILE (HORIZONTAL)

10 5 0 10 20
PROFILE (VERTICAL)

DESIGN DATA

ADT 2010 = 1100
ADT 2035 = 2200
DHV = 10%
D = 60%
T = 6% *
STATUTORY = 55 MPH
ADVISORY = 50 MPH
* TTST 2% DUAL 4%
SUB REGIONAL TIER

PROJECT LENGTH

LENGTH OF ROADWAY TIP PROJECT 17BP.2.R.52 =	0.119 MI.
LENGTH OF STRUCTURE TIP PROJECT 17BP.2.R.52 =	0.014 MI.
TOTAL LENGTH OF TIP PROJECT 17BP.2.R.52 =	0.133 MI.

Prepared In the Office of:

HNTB NORTH CAROLINA, P.C.
343 E. Six Forks Road, Suite 200
Raleigh, North Carolina 27609
NC License No: C-1554

2012 STANDARD SPECIFICATIONS

RIGHT OF WAY DATE:
SEPTEMBER 5, 2013

LETTING DATE:
FEBRUARY 12, 2014

ENRICO A. ROQUE, P.E.
PROJECT ENGINEER

BRIAN BLACKWELL, EI
PROJECT DESIGNER

MARIA ROGERSON, P.E.
NCDOT CONTACT

HYDRAULICS ENGINEER
NORTH CAROLINA PROFESSIONAL SEAL 15764 ENGINEER JAMES A. BYRD
James A. Byrd P.E.
SIGNATURE: 12/2/13

ROADWAY DESIGN ENGINEER
NORTH CAROLINA PROFESSIONAL SEAL 19824 ENGINEER ENRICO A. ROQUE
Enrico A. Roque P.E.
SIGNATURE: 12/2/13

DIVISION OF HIGHWAYS STATE OF NORTH CAROLINA

P.E.
STATE HIGHWAY DESIGN ENGINEER

12/2/2013
12:37:50 PM
...\Proj\390040_rdy_tsh.dgn

HNTB NORTH CAROLINA, P.C.
343 E. Six Forks Road, Suite 200
Raleigh, North Carolina 27609
NC License No: C-1554

PROJECT REFERENCE NO.	SHEET NO.
17BP.2.R.52	1-A
R/W SHEET NO.	

ROADWAY DESIGN ENGINEER

REVISIONS

INDEX OF SHEETS

SHEET NUMBER	SHEET
1	TITLE SHEET
1-A	INDEX OF SHEETS, GENERAL NOTES & LIST OF STANDARDS
1-B	SYMBOLOGY SHEET
2	TYPICAL SECTION SHEET
3	EARTHWORK, PAVEMENT REMOVAL, GUARDRAIL SUMMARY, ROW SUMMARY, & DRAINAGE SUMMARY SHEET
4	PLAN & PROFILE SHEET
TMP-1 THRU TMP-2	TRAFFIC CONTROL PLANS
EC-1 THRU EC-6	EROSION CONTROL PLANS
P-1	PERMIT DRAWING
X-1 THRU X-5	-L- CROSS SECTION SHEETS
S-1 THRU S-14	BRIDGE PLANS
UC-1 THRU UC-4	UTILITY CONSTRUCTION PLANS
UO-1 THRU UO-2	UTILITIES BY OTHERS

GENERAL NOTES:

2012 SPECIFICATIONS
EFFECTIVE: 01-17-2012
REVISED: 07-30-2012

GRADE LINE:
GRADING AND SURFACING:

THE GRADE LINES SHOWN DENOTE THE FINISHED ELEVATION OF THE PROPOSED SURFACING AT GRADE POINTS SHOWN ON THE TYPICAL SECTIONS. GRADE LINES MAY BE ADJUSTED AT THEIR BEGINNING AND ENDING AND AT STRUCTURES AS DIRECTED BY THE ENGINEER IN ORDER TO SECURE A PROPER TIE-IN.

CLEARING:

CLEARING ON THIS PROJECT SHALL BE PERFORMED TO THE LIMITS ESTABLISHED BY METHOD II.

SUPERELEVATION:

ALL CURVES ON THIS PROJECT SHALL BE SUPERELEVATED IN ACCORDANCE WITH STD. NO. 225.04
SUPERELEVATION IS TO BE REVOLVED ABOUT THE GRADE POINTS SHOWN ON THE TYPICAL SECTIONS.

SHOULDER CONSTRUCTION:

ASPHALT, EARTH, AND CONCRETE SHOULDER CONSTRUCTION ON THE HIGH SIDE OF SUPERELEVATED CURVES SHALL BE IN ACCORDANCE WITH

SIDE ROADS:

THE CONTRACTOR WILL BE REQUIRED TO DO ALL NECESSARY WORK TO PROVIDE SUITABLE CONNECTIONS WITH ALL ROADS, STREETS, AND DRIVES ENTERING THIS PROJECT. THIS WORK WILL BE PAID FOR AT THE CONTRACT UNIT PRICE FOR THE PARTICULAR ITEMS INVOLVED.

DRIVEWAYS:

DRIVEWAYS SHALL BE CONSTRUCTED IN ACCORDANCE WITH STD. 848.02 USING 3' RADII OR RADII AS SHOWN ON THE PLANS. LOCATIONS OF DRIVES WILL BE AS SHOWN ON THE PLANS OR AS DIRECTED BY THE ENGINEER.

GUARDRAIL:

THE GUARDRAIL LOCATIONS SHOWN ON THE PLANS MAY BE ADJUSTED DURING CONSTRUCTION AS DIRECTED BY THE ENGINEER. THE CONTRACTOR SHOULD CONSULT WITH THE ENGINEER PRIOR TO ORDERING GUARDRAIL MATERIAL.

SUBSURFACE PLANS:

NO SUBSURFACE PLANS ARE AVAILABLE ON THIS PROJECT. THE CONTRACTOR SHOULD MAKE HIS OWN INVESTIGATION AS TO THE SUBSURFACE CONDITIONS.

UTILITIES:

UTILITY OWNERS ON THIS PROJECT ARE

Power - Pitt and Greene EMC

Water - Greene County Water & Sewer

Phone - Centurylink

ANY RELOCATION OF EXISTING UTILITIES WILL BE ACCOMPLISHED BY OTHERS. EXCEPT AS SHOWN ON THE PLANS.

RIGHT-OF-WAY MARKERS:

ALL RIGHT-OF-WAY MARKERS ON THIS PROJECT SHALL BE PLACED BY OTHERS.

EFF. 01-17-2012
REV. 10-30-2012

2012 ROADWAY ENGLISH STANDARD DRAWINGS

The following Roadway Standards as appear in "Roadway Standard Drawings" Highway Design Branch - N. C. Department of Transportation - Raleigh, N. C., Dated January, 2012 are applicable to this project and by reference hereby are considered a part of these plans:

STD.NO.	TITLE
DIVISION 2 - EARTHWORK	
200.02	Method of Clearing - Method II
225.02	Guide for Grading Subgrade - Secondary and Local
225.04	Method of Obtaining Superelevation - Two Lane Pavement
DIVISION 3 - PIPE CULVERTS	
300.01	Method of Pipe Installation
DIVISION 4 - MAJOR STRUCTURES	
422.10	Reinforced Bridge Approach Fills
DIVISION 5 - SUBGRADE, BASES AND SHOULDERS	
560.01	Method of Shoulder Construction - High Side of Superelevated Curve - Method I
DIVISION 8 - INCIDENTALS	
840.29	Frames and Narrow Slot Flat Grates
840.35	Traffic Bearing Grated Drop Inlet - for Cast Iron Double Frame and Grates
846.01	Concrete Curb, Gutter and Curb & Gutter
848.02	Driveway Turnout - Radius Type
862.01	Guardrail Placement
862.02	Guardrail Installation
876.01	Rip Rap in Channels
876.02	Guide for Rip Rap at Pipe Outlets

$$$$DATE$$$$
$$$$SYSTIME$$$$
$$$$DGN$$$$

PROJECT REFERENCE NO.	SHEET NO.
17BP.2.R.52	1-B

Note: Not to Scale

****S.U.E. = Subsurface Utility Engineering***

STATE OF NORTH CAROLINA
DIVISION OF HIGHWAYS

CONVENTIONAL PLAN SHEET SYMBOLS

BOUNDARIES AND PROPERTY:

- State Line
- County Line
- Township Line
- City Line
- Reservation Line
- Property Line
- Existing Iron Pin — EIP
- Property Corner
- Property Monument — ECM
- Parcel/Sequence Number — 123
- Existing Fence Line
- Proposed Woven Wire Fence
- Proposed Chain Link Fence
- Proposed Barbed Wire Fence
- Existing Wetland Boundary — WLB
- Proposed Wetland Boundary — WLB
- Existing Endangered Animal Boundary — EAB
- Existing Endangered Plant Boundary — EPB

BUILDINGS AND OTHER CULTURE:

- Gas Pump Vent or U/G Tank Cap
- Sign — S
- Well — W
- Small Mine
- Foundation
- Area Outline
- Cemetery
- Building
- School
- Church
- Dam

HYDROLOGY:

- Stream or Body of Water
- Hydro, Pool or Reservoir
- Jurisdictional Stream — JS
- Buffer Zone 1 — BZ 1
- Buffer Zone 2 — BZ 2
- Flow Arrow
- Disappearing Stream
- Spring
- Wetland
- Proposed Lateral, Tail, Head Ditch — FLOW
- False Sump

RAILROADS:

- Standard Gauge — CSX TRANSPORTATION
- RR Signal Milepost — MILEPOST 35
- Switch — SWITCH
- RR Abandoned
- RR Dismantled

RIGHT OF WAY:

- Baseline Control Point
- Existing Right of Way Marker
- Existing Right of Way Line
- Proposed Right of Way Line — RW
- Proposed Right of Way Line with Iron Pin and Cap Marker — RW
- Proposed Right of Way Line with Concrete or Granite Marker — RW
- Existing Control of Access — CA
- Proposed Control of Access — CA
- Existing Easement Line — E
- Proposed Temporary Construction Easement — E
- Proposed Temporary Drainage Easement — TDE
- Proposed Permanent Drainage Easement — PDE
- Proposed Permanent Utility Easement — PUE

ROADS AND RELATED FEATURES:

- Existing Edge of Pavement
- Existing Curb
- Proposed Slope Stakes Cut — C
- Proposed Slope Stakes Fill — F
- Proposed Wheel Chair Ramp — WCR
- Proposed Wheel Chair Ramp Curb Cut — WCC
- Curb Cut for Future Wheel Chair Ramp — CCFR
- Existing Metal Guardrail
- Proposed Guardrail
- Existing Cable Guiderail
- Proposed Cable Guiderail
- Equality Symbol
- Pavement Removal

VEGETATION:

- Single Tree
- Single Shrub
- Hedge
- Woods Line
- Orchard
- Vineyard — Vineyard

EXISTING STRUCTURES:

MAJOR:

- Bridge, Tunnel or Box Culvert — CONC
- Bridge Wing Wall, Head Wall and End Wall — CONC WW

MINOR:

- Head and End Wall — CONC HW
- Pipe Culvert
- Footbridge
- Drainage Box: Catch Basin, DI or JB — CB
- Paved Ditch Gutter
- Storm Sewer Manhole — S
- Storm Sewer — S

UTILITIES:

POWER:

- Existing Power Pole
- Proposed Power Pole
- Existing Joint Use Pole
- Proposed Joint Use Pole
- Power Manhole — P
- Power Line Tower
- Power Transformer
- U/G Power Cable Hand Hole — HH
- H–Frame Pole
- Recorded U/G Power Line — P
- Designated U/G Power Line (S.U.E.*) — P

TELEPHONE:

- Existing Telephone Pole
- Proposed Telephone Pole
- Telephone Manhole — T
- Telephone Booth
- Telephone Pedestal — T
- Telephone Cell Tower
- U/G Telephone Cable Hand Hole — HH
- Recorded U/G Telephone Cable — T
- Designated U/G Telephone Cable (S.U.E.*) — T
- Recorded U/G Telephone Conduit — TC
- Designated U/G Telephone Conduit (S.U.E.*) — TC
- Recorded U/G Fiber Optics Cable — T FO
- Designated U/G Fiber Optics Cable (S.U.E.*) — T FO

WATER:

- Water Manhole — W
- Water Meter
- Water Valve
- Water Hydrant
- Recorded U/G Water Line — W
- Designated U/G Water Line (S.U.E.*) — W
- Above Ground Water Line — A/G Water

TV:

- TV Satellite Dish
- TV Pedestal — C
- TV Tower
- U/G TV Cable Hand Hole — HH
- Recorded U/G TV Cable — TV
- Designated U/G TV Cable (S.U.E.*) — TV
- Recorded U/G Fiber Optic Cable — TV FO
- Designated U/G Fiber Optic Cable (S.U.E.*) — TV FO

GAS:

- Gas Valve
- Gas Meter
- Recorded U/G Gas Line — G
- Designated U/G Gas Line (S.U.E.*) — G
- Above Ground Gas Line — A/G Gas

SANITARY SEWER:

- Sanitary Sewer Manhole
- Sanitary Sewer Cleanout
- U/G Sanitary Sewer Line — SS
- Above Ground Sanitary Sewer — A/G Sanitary Sewer
- Recorded SS Forced Main Line — FSS
- Designated SS Forced Main Line (S.U.E.*) — FSS

MISCELLANEOUS:

- Utility Pole
- Utility Pole with Base
- Utility Located Object
- Utility Traffic Signal Box — S
- Utility Unknown U/G Line — ?UTL
- U/G Tank; Water, Gas, Oil
- A/G Tank; Water, Gas, Oil
- U/G Test Hole (S.U.E.*)
- Abandoned According to Utility Records — AATUR
- End of Information — E.O.I.

HNTB NORTH CAROLINA, P.C.
343 E. Six Forks Road, Suite 200
Raleigh, North Carolina 27609
NC License No: C-1554

PROJECT REFERENCE NO.	SHEET NO.
17BP.2.R.52	2
R/W SHEET NO.	
ROADWAY DESIGN ENGINEER	PAVEMENT ENGINEER

NORTH CAROLINA PROFESSIONAL SEAL 19824 ENGINEER RICHARD ROOLLEY
12/2/13

REVISIONS

PAVEMENT SCHEDULE

C1	PROP. APPROX. 3.0" ASPHALT CONCRETE SURFACE COURSE, TYPE SF9.5A, AT AN AVERAGE RATE OF 165 LBS. PER SQ. YARD IN EACH OF TWO LAYERS.
D	PROP. APPROX. 2.5" ASPHALT CONCRETE INTERMEDIATE COURSE, TYPE I19.0B, AT AN AVERAGE RATE OF 285 LBS. PER SQ. YD.
D1	PROP. VAR. DEPTH ASPHALT CONCRETE INTERMEDIATE COURSE, TYPE I19.0B, AT AN AVERAGE RATE OF 114 LBS. PER SQ. YD. PER 1" DEPTH, TO BE PLACED IN LAYERS NOT LESS THAN 2 1/2" IN DEPTH OR GREATER THAN 4" IN DEPTH.
E	PROP. APPROX. 4" ASPHALT CONCRETE BASE COURSE, TYPE B25.0B, AT AN AVERAGE RATE OF 456 LBS. PER SQ. YARD.
E1	PROP. VARIABLE DEPTH ASPHALT CONCRETE BASE COURSE, TYPE B25.0B AT AN AVERAGE RATE OF 114 LBS. PER SQ. YARD PER INCH DEPTH, TO BE PLACED IN LAYERS NOT LESS THAN 3" IN DEPTH OR GREATER THAN 5.5" IN DEPTH.
T	EARTH MATERIAL
U	EXISTING PAVEMENT
W	WEDGING (SEE DETAIL)

ALL PAVEMENT EDGE SLOPES ARE 1:1 UNLESS SHOWN OTHERWISE

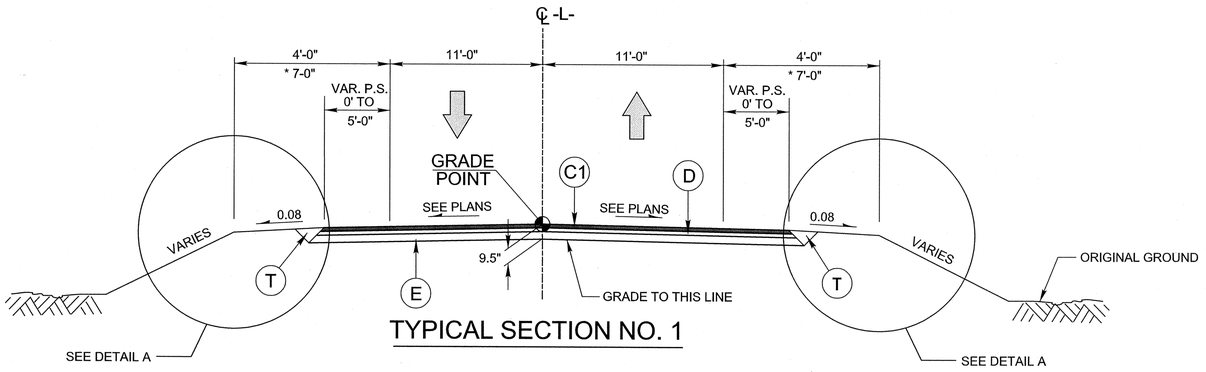

TYPICAL SECTION NO. 1

USE TYPICAL SECTION NO. 1 FROM:

-L- STA. 10+75.00 TO -L- STA. 13+03.88 (BEGIN BRIDGE)
-L- STA. 13+76.13 (END BRIDGE) TO -L- STA. 17+25.00

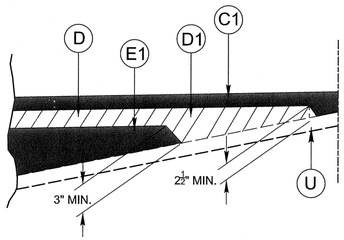

DETAIL SHOWING METHOD OF WEDGING

SEE TYPICAL SECTIONS

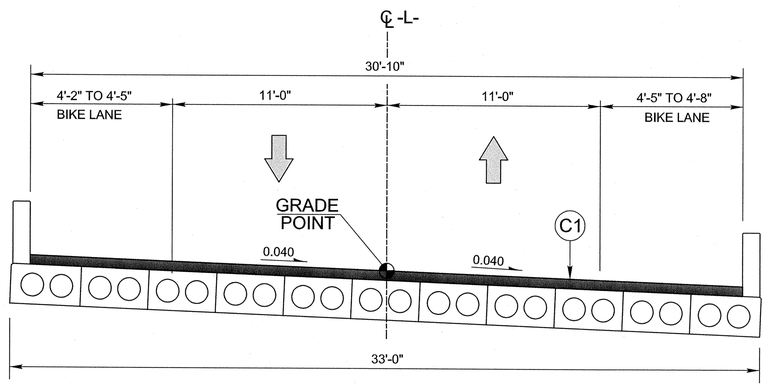

TYPICAL SECTION NO. 2

CORED SLAB BRIDGE OVERLAY

USE TYPICAL SECTION NO. 2 FROM:

-L- STA. 13+03.88 TO -L- STA. 13+76.13

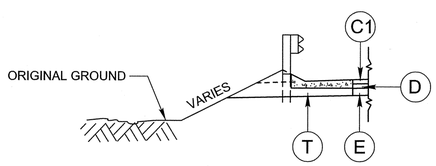

DETAIL A

SHOULDER BERM GUTTER LOCATIONS

-L- STA. 12+49.0 TO -L- STA. 12+92.6 RT

NOTES: * SHOULDER WIDTH INCREASED 3' WITH THE USE OF GUARDRAIL

12/2/2013
1:25:13 PM
...\Proj\390040_rdy_typ.dgn

Note: Approximate quantities only. Unclassified Excavation, Borrow Excavation, Fine Grading, Clearing and Grubbing, and Removal of Existing Pavement will be paid for at the contract lump sum price for "Grading."

HNTB NORTH CAROLINA, P.C.
343 E. Six Forks Road, Suite 200
Raleigh, North Carolina 27609
NC License No: C-1554

PROJECT REFERENCE NO.	SHEET NO.
17BP.2.R.52	3
R/W SHEET NO.	

ROADWAY DESIGN ENGINEER

SEAL 19274 ENGINEER NORTH CAROLINA PROFESSIONAL
12/2/13

REVISIONS

ROW AREA DATA SUMMARY

PARCEL NO.	PROPERTY OWNERS NAMES	TOTAL ACREAGE	AREA TAKEN (SQFT)	AREA REMAINING RT.	AREA REMAINING LT.	CONST. EASE.	PERM. DRAIN. EASE.	TEMP. DRAIN. EASE.
1	JEAN D. CARROLL	–				261.4	1445.1	
2	WALTER A. MURRAY	–				989.1	378.1	
3	ALICE BARNETTE	–				99.7		

DRAINAGE SUMMARY

STATION	LOCATION (LT,RT, OR CL)	STRUCTURE NO. FROM	STRUCTURE NO. TO	TOP ELEVATION	INVERT ELEVATION	INVERT ELEVATION	SLOPE CRITICAL	CLASS IV R.C. PIPE (UNLESS NOTED OTHERWISE) 15″	18″	24″	QUANTITIES FOR DRAINAGE STRUCTURES TOTAL L.F. FOR PAY QUANTITY SHALL BE COL.'A' + (1.3 X COL. 'B') PER EACH (0 THRU 5.0')	A 5.0' THRU 10.0'	B 10.0' AND ABOVE	SIDE DRAIN PIPE 15″	18″	24″	TB GRATED D.I., TYPE 'B' STD. 840.35	T.B.D.I. FRAME AND TWO GRATES STD. 840.29		REMARKS
SIZE																				
THICKNESS OR GAUGE																				
–L– 12+51.0	RT	0401		41.40							1						1	1		
–L– 12+51.0	LT	0401	OUT		37.29	36.65		48												
TOTAL								48			1						1	1		

ABBREVIATIONS

C.B.	CATCH BASIN
N.D.I.	NARROW DROP INLET
D.I.	DROP INLET
M.D.I.	MEDIAN DROP INLET
M.D.I. (N.S.)	MEDIAN DROP INLET (NARROW SLOT)
J.B.	JUNCTION BOX
M.H.	MANHOLE
T.B.D.I.	TRAFFIC BEARING DROP INLET
T.B.J.B.	TRAFFIC BEARING JUCTION BOX

SUMMARY OF EARTHWORK
IN CUBIC YARDS

STATION	STATION	UNCLASSIFIED EXCAVATION	EMBANK. +%	BORROW	WASTE
–L– STA. 10+25.00	–L– STA. 13+28.00	143	462	319	
–L– STA. 13+55.00	–L– STA. 17+25.00	179	524	345	
PROJECT SUBTOTAL		322	986	664	0
WASTE TO REPLACE BORROW				0	0
PROJECT TOTAL		322	986	664	0
GRAND TOTALS:		322		664	
SAY:		330		670	

PAVEMENT REMOVAL SUMMARY
IN SQUARE YARDS

LOCATION	REMOVAL OF ASPHALT PAVEMENT	BREAKING OF ASPHALT PAVEMENT
-L- STA. 10+25 TO 13+16	727	
-L- STA. 13+68 TO 17+25	895	
GRAND TOTAL	1622	
SAY	1630	

GUARDRAIL SUMMARY

SURVEY LINE	BEG. STA.	END STA.	LOCATION	LENGTH STRAIGHT	LENGTH SHOP CURVED	LENGTH DOUBLE FACED	WARRANT POINT APPROACH END	WARRANT POINT TRAILING END	"N" DIST. FROM E.O.L.	TOTAL SHOULDER WIDTH	FLARE LENGTH APPROACH END	FLARE LENGTH TRAILING END	W APPROACH END	W TRAILING END	ANCHORS XI MOD	XI	GRAU 350	TYPE 350 (TL–3)	XIII	CAT–1	III	BIC	AT–1	IMPACT ATTENUATOR TYPE 350 EA	G	NG	SINGLE FACED GUARDRAIL	REMOVE EXISTING GUARDRAIL	REMOVE AND STOCKPILE EXISTING GUARDRAIL	REMARKS
–L–	11+96.70	13+03.63	RT	112.5			13+03.63		4	7	50		1					1			1									
–L–	12+29.58	13+04.11	LT	75.0				13+04.11	4	7		50		1				1			1									
–L–	13+76.37	14+52.20	RT	75.0				13+76.37	4	7		50		1				1			1									
–L–	13+75.90	14+50.04	LT	75.0			13+75.90		4	7	50		1					1			1									
	LESS ANCHOR DEDUCTIONS																													
	TYPE 350, TL–3	4 @ 50.00′	=	200.0																										
	TYPE III	4 @ 18.75′	=	75.0																										
			TOTAL	62.5														4			4									
			SAY	75.0																										
	(5 ADDITIONAL GUARDRAIL POST)																													

12/2/2013
12:22:10 PM
...\Proj\390040_rdy_sum.dgn

REVISIONS

CENTERLINE COORDINATE LIST

POINT	STATION	NORTHING	EASTING
POT	10+00.00	626767.2300	2400769.1080
BEG	10+25.00	626767.2659	2400794.1080
PC	11+44.68	626767.4378	2400913.7843
PCC	14+18.28	626751.5755	2401186.7654
END	17+25.00	626664.0696	2401479.1391
PT	18+07.98	626623.5067	2401551.4898
POT	19+84.97	626529.8111	2401701.6508

DATUM DESCRIPTION

THE LOCALIZED COORDINATE SYSTEM DEVELOPED FOR THIS PROJECT IS BASED ON THE STATE PLANE COORDINATES ESTABLISHED BY NCDOT FOR MONUMENT "BL-2"
WITH NAD 83/NSRS 2007 STATE PLANE GRID COORDINATES OF NORTHING: 626774.402(ft) EASTING: 2401147.035(ft)
ELEVATION: 41.01(ft)
THE AVERAGE COMBINED GRID FACTOR USED ON THIS PROJECT (GROUND TO GRID) IS: 0.99988308
THE N.C. LAMBERT GRID BEARING AND LOCALIZED HORIZONTAL GROUND DISTANCE FROM "BL-2" TO -L- STATION 10+00.00 IS
S 88° 54' 46.1" W 377.9950'
ALL LINEAR DIMENSIONS ARE LOCALIZED HORIZONTAL DISTANCES
VERTICAL DATUM USED IS NAVD 88

Point	North	East	Elevation	Description
BDS1	626759.9010	2401085.3930	40.5840	CL SHOT @ BRIDGE DECK
BDS2	626755.5950	2401136.3770	40.5470	CL SHOT @ BRIDGE DECK
BS1	626777.1530	2401087.3740	40.0160	BRIDGE SEAT 1
BS2	626772.8620	2401137.3760	39.9860	BRIDGE SEAT 2
BS3	626739.0920	2401134.7000	38.4690	BRIDGE SEAT 3
BS4	626743.4750	2401084.3410	38.5490	BRIDGE SEAT 4

Point	North	East	Elevation	Description
1	626795.9470	2400287.4600	47.7000	BL-1
2	626774.4020	2401147.0350	41.0120	BL-2
3	626619.0780	2401609.2090	45.3600	BL-3
BM1	626782.3530	2401202.3520	38.1540	R/R SPIKE SET IN BASE OF POWER POLE

PLAN

HNTB NORTH CAROLINA, P.C.
343 E. Six Forks Road, Suite 200
Raleigh, North Carolina 27609
NC License No: C-1554

PROJECT REFERENCE NO.	SHEET NO.
17BP.2.R.52	4
R/W SHEET NO.	

ROADWAY DESIGN ENGINEER — SEAL 19824 — 12/2/13
HYDRAULICS ENGINEER — SEAL 15764 — 12/2/13

-L-
PI Sta 12+81.64
Δ = 6° 48' 56.8" (RT)
D = 2° 29' 28.0"
L = 273.60'
T = 136.96'
R = 2,300.00'

PI Sta 16+16.34
Δ = 25° 13' 45.6" (RT)
D = 6° 28' 26.8"
L = 389.70'
T = 198.06'
R = 885.00'

NC GRID NAD 83/NSRS 2007

1 JEAN D. CARROLL DB 666 PG 124
2 WALTER A. MURRAY DB 644 PG 715
3 ALICE BARNETTE DB 606 PG 463
RAY E. MURRAY, JR DB 605 PG 146
HAM FARMS INC. DB 650 PG 386

BEGIN PROJECT 17BP.2.R.52
BEGIN CONSTRUCTION
-L- STA.10+25.00

-L- POT Sta. 10+00.00

BEGIN BRIDGE
-L- STA.13+03.88

BEGIN APP.SLAB
-L- STA.12+92.88

END BRIDGE
-L- STA.13+76.13

END APP.SLAB
-L- STA.13+87.13

END PROJECT 17BP.2.R.52
END CONSTRUCTION
-L- STA.17+25.00

CLASS 'B' RIP-RAP
EST. 1 TONS
EST. 5 GEO

TOE PROTECTION
-SEE DETAIL A
90 SY PSRM

RETAIN

-L- PC Sta. 11+44.68

-L- PCC Sta. 14+18.28

-L- PT Sta. 18+07.98

-L- POT Sta. 19+84.97

N 89° 55' 03.7" E

S 58° 02' 13.8" E

BEGIN SHLD. BERM GUTTER STA.12+49.0 RT.

END SHLD. BERM GUTTER STA.12+92.6 RT.

BRIDGE NO. 40

TB2GI

TYPE III

TYPE 350

WOODED

POND

ISFD

HTR

50' TAPER TO EXISTING

EXISTING R/W

SR 1400 FOUR WAY RD

BL-3

DETAIL A
TOE PROTECTION
(Not to Scale)

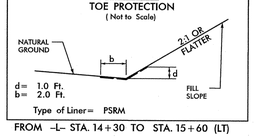

Type of Liner= PSRM
FROM -L- STA. 14+30 TO STA. 15+60 (LT)

NOTE: PDE FOR MAINTENANCE PURPOSES ONLY. CONTRACTOR TO USE METHOD II FOR CLEARING.

PROFILE

MATERIAL TO BE REMOVED

PI = 11+00.00
EL = 41.55'
VC = 150'
K = 104
DS = 50

PI = 16+50.00
EL = 43.20'
VC = 150'
K = 127
DS = 55

WS EL= 34.4
SURVEY 4-10-13

(−)11.1467%

(+)0.3000%

(+)1.4800%

BEGIN GRADE
-L- STA.10+25.00
EL. 42.41

BEGIN BRIDGE
-L- STA.13+03.88
EL = 42.16'

END BRIDGE
-L- STA.13+76.13
EL = 42.38'

END GRADE
-L- STA.17+25.00
EL. 44.31

BRIDGE HYDRAULIC DATA

DESIGN DISCHARGE	= 600	CFS
DESIGN FREQUENCY	= 25	YRS
DESIGN HW ELEVATION	= 38.1	FT
BASE DISCHARGE	= 950	CFS
BASE FREQUENCY	= 100	YRS
BASE HW ELEVATION	= 38.87	FT
OVERTOPPING DISCHARGE	=	CFS
OVERTOPPING FREQUENCY	= >500	YRS
OVERTOPPING ELEVATION	= 41.82	FT
DATE OF SURVEY	= 4-10-13	
W.S. ELEVATION AT DATE OF SURVEY	= 34.4	FT

50 40 30 20 10

10+00 11+00 12+00 13+00 14+00 15+00 16+00 17+00

12/2/2013
12:22:34 PM
...\Proj\390040_rdy_psh_s04.dgn

STATE OF NORTH CAROLINA
DIVISION OF HIGHWAYS

TRANSPORTATION MANAGEMENT PLAN

GREENE COUNTY

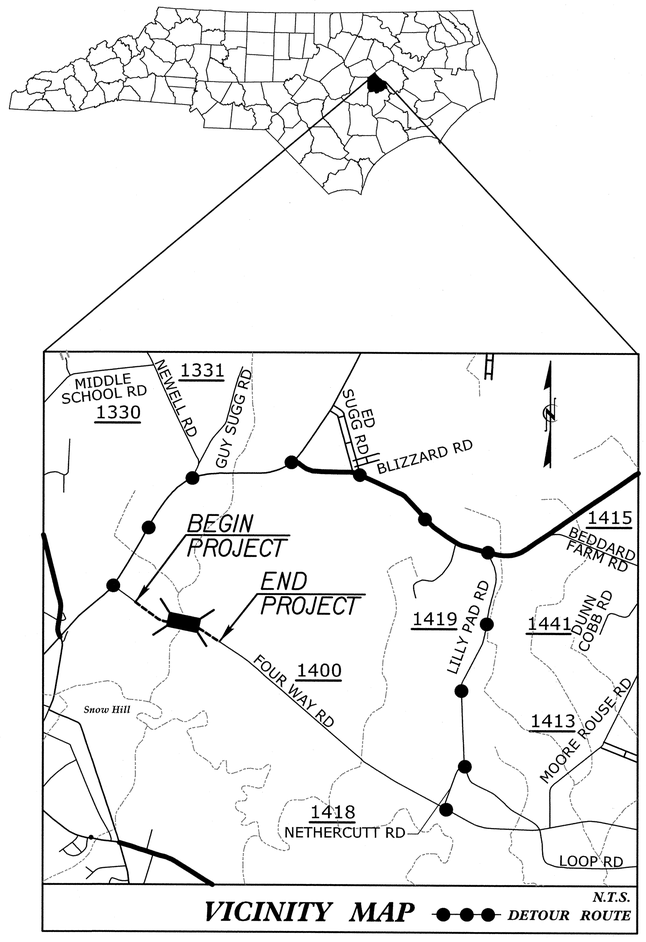

VICINITY MAP — *DETOUR ROUTE*

N.T.S.

INDEX OF SHEETS

SHEET NO.	TITLE
TMP-1	TITLE SHEET WITH VICINTY MAP, INDEX OF SHEETS, LIST OF APPLICABLE ROADWAY STANDARD DRAWINGS, AND LEGEND
TMP-2	GENERAL NOTES, DETOUR AND PLAN.

ROADWAY STANDARD DRAWINGS

THE FOLLOWING ROADWAY STANDARDS AS SHOWN IN "ROADWAY STANDARD DRAWINGS" PROJECT SERVICES UNIT - N.C. DEPARTMENT OF TRANSPORTATION - RALEIGH, N.C. DATED JAN 2012 ARE APPLICABLE TO THIS PROJECT AND BY REFERENCE HEREBY ARE CONSIDERED A PART OF THESE PLANS:

	TITLE
1101.01	WORK ZONE ADVANCE WARNING SIGNS
1101.11	TRAFFIC CONTROL DESIGN TABLES
1130.01	DRUMS
1150.01	FLAGGERS

LEGEND

GENERAL

- DIRECTION OF TRAFFIC FLOW
- DIRECTION OF PEDESTRIAN TRAFFIC FLOW
- EXIST. PVMT.
- NORTH ARROW
- PROPOSED PVMT.
- WORK AREA

TRAFFIC CONTROL DEVICES

- BARRICADE (TYPE III)

HNTB NORTH CAROLINA, P.C.
343 E. Six Forks Road, Suite 200
Raleigh, North Carolina 27609
NC License No: C-1554

R. B. EARLY, PE — *TRAFFIC CONTROL PROJECT ENGINEER*

J. A. PHILLIPS — *TRAFFIC CONTROL DESIGN ENGINEER*

APPROVED: Rhonda B Early
DATE: 12-2-13

SEAL

NORTH CAROLINA PROFESSIONAL SEAL 023521 ENGINEER RHONDA B. EARLY

WORK ZONE SAFETY & MOBILITY
"from the MOUNTAINS to the COAST"

N.C.D.O.T. WORK ZONE TRAFFIC CONTROL
1561 MAIL SERVICE CENTER (MSC) RALEIGH, NC 27699-1561
750 N. GREENFIELD PARKWAY, GARNER, NC 27529 (DELIVERY)
PHONE: (919) 773-2800 FAX: (919) 771-2745

STEVEN J. HAMILTON, PE *DIVISION TRAFFIC ENGINEER*

DIVISION OF HIGHWAYS * STATE OF NORTH CAROLINA * DEPARTMENT OF TRANSPORTATION * WORK ZONE TRAFFIC CONTROL

SHEET NO.
TMP-1

17.BP.2.R.52

TIP PROJECT:

9:15:15 AM
::\TCP\BR40_tc_TCP_01_title.dgn
$$$$USERNAME$$$$

PROJ. REFERENCE NO.	SHEET NO.
17BP.2.R.52	TMP-2

GENERAL NOTES

IMPLEMENT TRAFFIC CONTROL IN ACCORDANCE WITH THE ROADWAY STANDARD DRAWINGS LISTED ON TMP-1.

CHANGES MAY BE REQUIRED WHEN PHYSICAL DIMENSIONS IN THE DETAIL DRAWINGS, STANDARD DETAILS AND ROADWAY DETAILS ARE NOT ATTAINABLE TO MEET FIELD CONDITIONS, OR RESULT IN DUPLICATE, OR UNDESIRED OVERLAPPING, OF DEVICES. MODIFICATIONS MAY INCLUDE: MOVING, SUPPLEMENTING, COVERING OR REMOVAL OF DEVICES, AS DIRECTED BY THE ENGINEER.

STATE FORCES WILL INSTALL AND MAINTAIN THE PROJECT DETOUR AND THE TYPE III BARRICADES AT THE PROJECT LIMITS.
STATE FORCES WILL INSTALL MARKINGS AND MARKERS ON THE FINISHED PROJECT.
CALL JIM EVANS AT 252-830-3493 FOR COORDINATION.

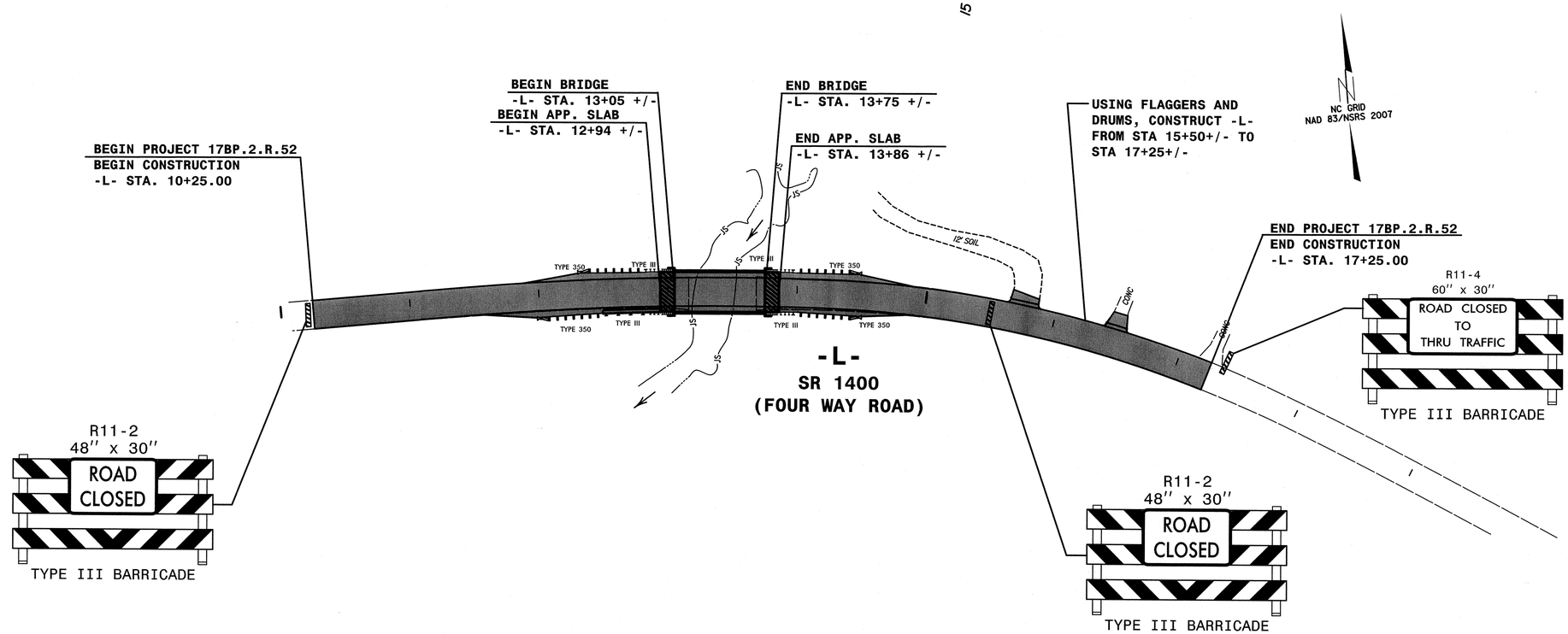

REVISIONS

8/17/99

9:16:25 AM
:\TCP\BR40_tc_TCP_02_detour.dgn
$$$$USERNAME$$$$

QA/QC STAGE:
REVIEW:
CONCUR:
REVISE:
VERIFY:

HNTB
HNTB NORTH CAROLINA, P.C.
343 E. Six Forks Road, Suite 200
Raleigh, North Carolina 27609
NC License No: C-1554

APPROVED: Rhonda B. Early DATE: 12-2-13

SEAL

NORTH CAROLINA PROFESSIONAL SEAL 023521 ENGINEER RHONDA B. EARLY

DIVISION OF HIGHWAYS
STATE OF NORTH CAROLINA
DEPARTMENT OF TRANSPORTATION
WORK ZONE TRAFFIC CONTROL

TRANSPORTATION MANAGEMENT PLAN

GENERAL NOTES, DETOUR AND DETAIL

TIP PROJECT: 17BP.2.R.52

STATE OF NORTH CAROLINA
DIVISION OF HIGHWAYS

PLAN FOR PROPOSED
HIGHWAY EROSION CONTROL

LOCATION: ***BRIDGE NO. 040 OVER PANTHER SWAMP ON SR 1400 (FOUR WAY RD.)***

TYPE OF WORK: GRADING, PAVING, DRAINAGE & STRUCTURE

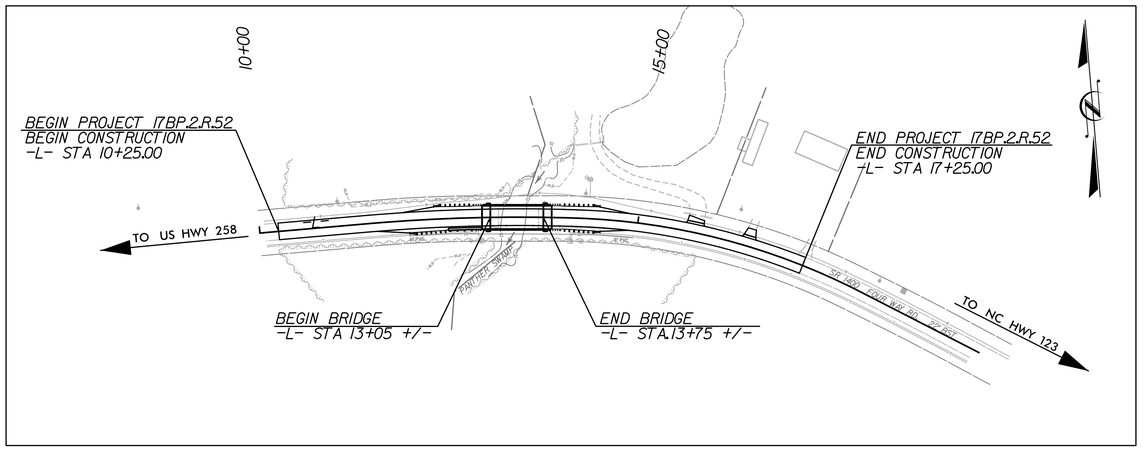

STATE	STATE PROJECT REFERENCE NO.	SHEET NO.	TOTAL SHEETS
N.C.	17BP.2.R.52	EC-1	6

STATE PROJ. NO.	F. A. PROJ. NO.	DESCRIPTION

EROSION AND SEDIMENT CONTROL MEASURES

Std. #	Description	Symbol
1630.03	Temporary Silt Ditch	TSD
1630.05	Temporary Diversion	TD
1605.01	Temporary Silt Fence	
1606.01	Special Sediment Control Fence	
1622.01	Temporary Berms and Slope Drains	
	Silt Basin Type B	
1633.01	Temporary Rock Silt Check Type-A	
	Temporary Rock Silt Check Type-A with Matting and Polyacrylamide (PAM)	
	Temporary Rock Silt Check Type-B	
	Wattle / Coir Fiber Wattle	
	Wattle / Coir Fiber Wattle with Polyacrylamide (PAM)	
1634.01	Temporary Rock Sediment Dam Type-A	
1634.02	Temporary Rock Sediment Dam Type-B	
1635.01	Rock Pipe Inlet Sediment Trap Type-A	
1635.02	Rock Pipe Inlet Sediment Trap Type-B	
1630.04	Stilling Basin	
1630.06	Special Stilling Basin	
	Rock Inlet Sediment Trap:	
1632.01	Type A	A
1632.02	Type B	B
1632.03	Type C	C
	Skimmer Basin	
	Tiered Skimmer Basin	
	Infiltration Basin	

THIS PROJECT HAS BEEN DESIGNED TO SENSITIVE WATERSHED STANDARDS.

ENVIRONMENTALLY SENSITIVE AREA(S) EXIST ON THIS PROJECT

Refer To E. C. Special Provisions for Special Considerations.

GRAPHIC SCALE

0
PLANS
0
PROFILE (HORIZONTAL)
0
PROFILE (VERTICAL)

ROADSIDE ENVIRONMENTAL UNIT
DIVISION OF HIGHWAYS
STATE OF NORTH CAROLINA

THESE EROSION AND SEDIMENT CONTROL PLANS COMPLY WITH THE REGULATIONS SET FORTH BY THE NCG-010000 GENERAL CONSTRUCTION PERMIT EFFECTIVE AUGUST 3, 2011 ISSUED BY THE NORTH CAROLINA DEPARTMENT OF ENVIRONMENT AND NATURAL RESOURCES DIVISION OF WATER QUALITY.

Prepared In the Office of:

HNTB NORTH CAROLINA, P.C.
343 E. Six Forks Road, Suite 200
Raleigh, North Carolina 27609
NC License No: C-1554

2012 STANDARD SPECIFICATIONS

JOHN F. WATSON
EROSION CONTROL
LEVEL III
CERTIFICATION #3419

Roadway Standard Drawings

The following roadway english standards as appear in "Roadway Standard Drawings"– Roadway Design Unit – N. C. Department of Transportation – Raleigh, N. C., dated January 2012 and the latest revison thereto are applicable to this project and by reference hereby are considered a part of these plans.

1604.01	Railroad Erosion Control Detail	1632.01	Rock Inlet Sediment Trap Type A
1605.01	Temporary Silt Fence	1632.02	Rock Inlet Sediment Trap Type B
1606.01	Special Sediment Control Fence	1632.03	Rock Inlet Sediment Trap Type C
1607.01	Gravel Construction Entrance	1633.01	Temporary Rock Silt Check Type A
1622.01	Temporary Berms and Slope Drains	1633.02	Temporary Rock Silt Check Type B
1630.01	Riser Basin	1634.01	Temporary Rock Sediment Dam Type A
1630.02	Silt Basin Type B	1634.02	Temporary Rock Sediment Dam Type B
1630.03	Temporary Silt Ditch	1635.01	Rock Pipe Inlet Sediment Trap Type A
1630.04	Stilling Basin	1635.02	Rock Pipe Inlet Sediment Trap Type B
1630.05	Temporary Diversion	1640.01	Coir Fiber Baffle
1630.06	Special Stilling Basin	1645.01	Temporary Stream Crossing
1631.01	Matting Installation		

11:48:06 AM
$$$$USERNAME$$$$

PROJECT REFERENCE NO.	SHEET NO.
17BP.2.R.52	EC-2

COIR FIBER WATTLE WITH POLYACRYLAMIDE (PAM) DETAIL

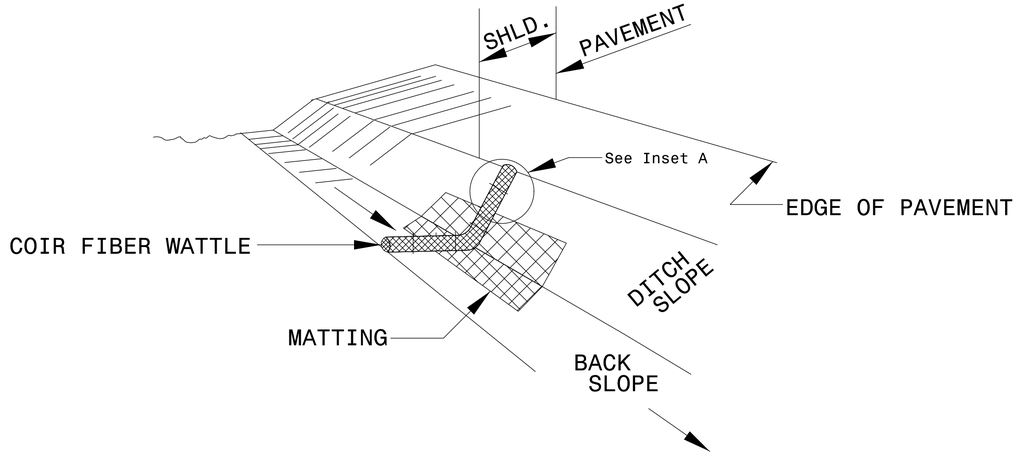

ISOMETRIC VIEW

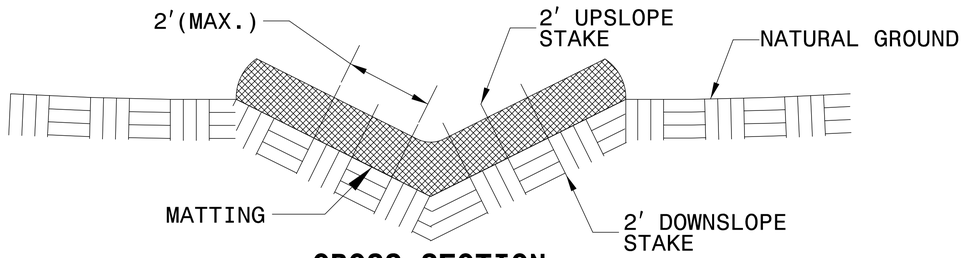

CROSS SECTION VEE DITCH

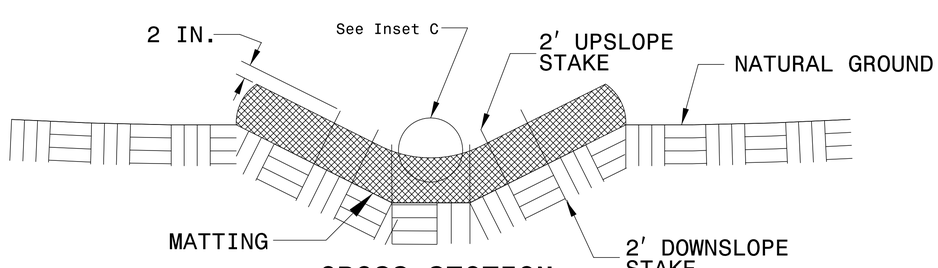

CROSS SECTION TRAPEZOIDAL DITCH

NOTES:

USE MINIMUM 12 IN. DIAMETER COIR FIBER (COCONUT FIBER) WATTLE.

USE 2 FT. WOODEN STAKES WITH A 2 IN. BY 2 IN. NOMINAL CROSS SECTION.

ONLY INSTALL WATTLE(S) TO A HEIGHT IN DITCH SO FLOW WILL NOT WASH AROUND WATTLE AND SCOUR DITCH SLOPES AND AS DIRECTED.

INSTALL A MINIMUM OF 2 UPSLOPE STAKES AND 4 DOWNSLOPE STAKES AT AN ANGLE TO WEDGE WATTLE TO BOTTOM OF DITCH.

PROVIDE STAPLES MADE OF 0.125 IN. DIAMETER STEEL WIRE FORMED INTO A U SHAPE NOT LESS THAN 12" IN LENGTH.

INSTALL STAPLES APPROXIMATELY EVERY 1 LINEAR FOOT ON BOTH SIDES OF WATTLE AND AT EACH END TO SECURE IT TO THE SOIL.

INSTALL MATTING IN ACCORDANCE WITH SECTION 1631 OF THE STANDARD SPECIFICATIONS.

PRIOR TO POLYACRYLAMIDE (PAM) APPLICATION, OBTAIN A SOIL SAMPLE FROM PROJECT LOCATION, AND FROM OFFSITE MATERIAL, AND ANALYZE FOR APPROPRIATE PAM FLOCCULANT TO BE APPLIED TO EACH WATTLE.

INITIALLY APPLY 2 OUNCES OF ANIONIC OR NEUTRALLY CHARGED PAM OVER WATTLE WHERE WATER WILL FLOW AND 1 OUNCE OF PAM ON MATTING ON EACH SIDE OF WATTLE. REAPPLY PAM AFTER EVERY RAINFALL EVENT THAT IS EQUAL TO OR EXCEEDS 0.50 IN.

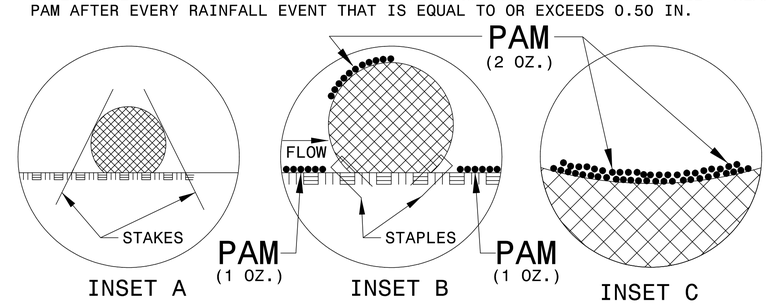

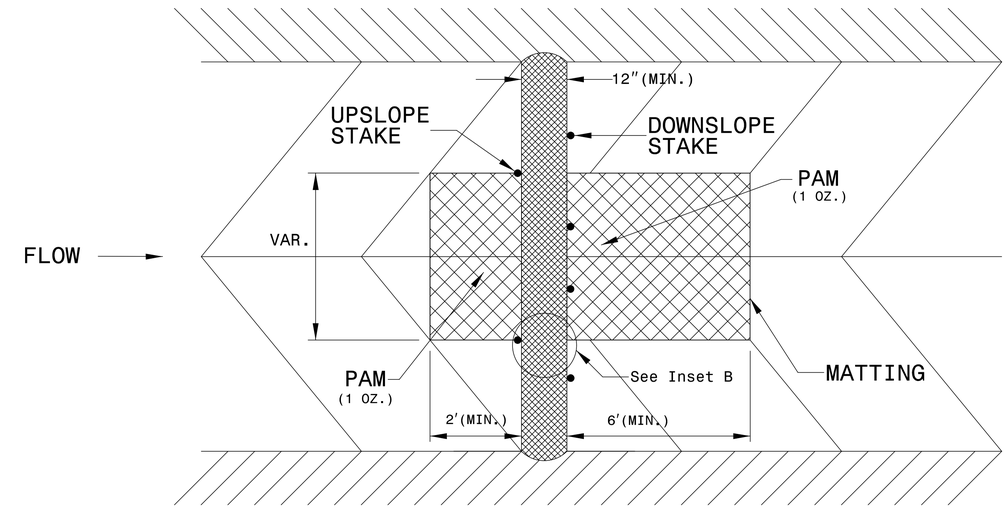

TOP VIEW

6/2/99

9:50:57 AM
...\390040_ec_detail.dgn
$$$$USERNAME$$$$

PROJECT REFERENCE NO.	SHEET NO.
17BP.2.R.52	EC-3
R/W SHEET NO.	

SILT FENCE COIR FIBER WATTLE BREAK DETAIL

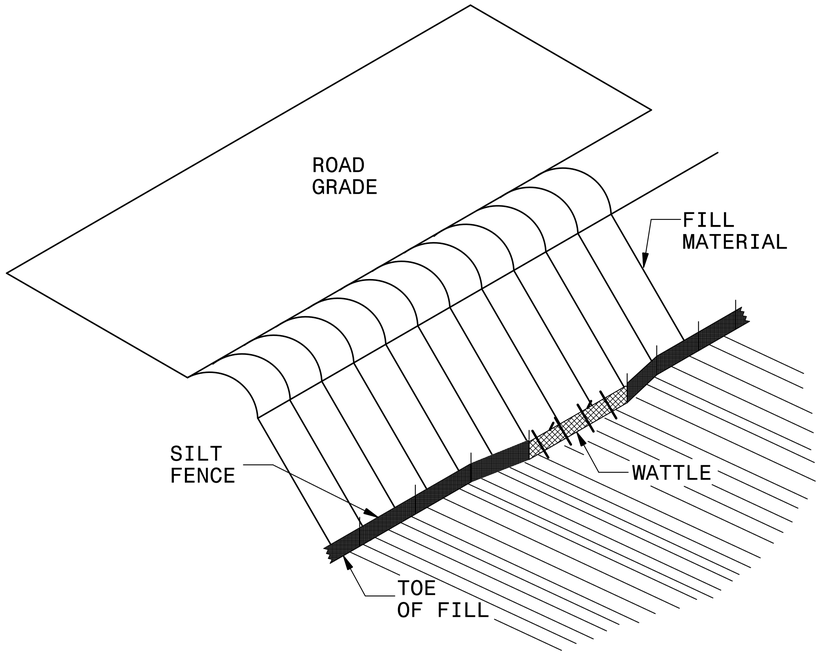

ISOMETRIC VIEW

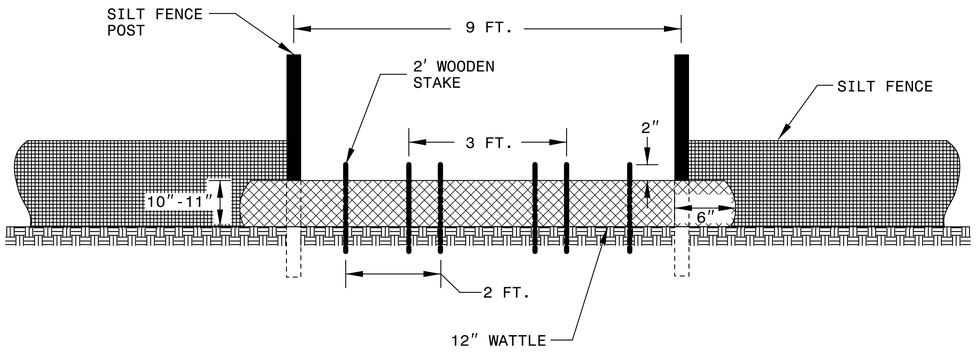

VIEW FROM SLOPE

NOTES:

USE MINIMUM 12 IN. DIAMETER COIR FIBER (COCONUT FIBER) WATTLE AND LENGTH OF 10 FT.

EXCAVATE A 1 TO 2 INCH TRENCH FOR WATTLE TO BE PLACED.

DO NOT PLACE WATTLE ON TOE OF SLOPE.

USE 2 FT. WOODEN STAKES WITH A 2 IN. BY 2 IN. NOMINAL CROSS SECTION.

INSTALL A MINIMUM OF 2 UPSLOPE STAKES AND 4 DOWNSLOPE STAKES AT AN ANGLE TO WEDGE WATTLE TO GROUND.

PROVIDE STAPLES MADE OF 0.125 IN. DIAMETER STEEL WIRE FORMED INTO A U SHAPE NOT LESS THAN 12″ IN LENGTH.

INSTALL STAPLES APPROXIMATELY EVERY 1 LINEAR FOOT ON BOTH SIDES OF WATTLE AND AT EACH END TO SECURE IT TO THE SOIL.

WATTLE INSTALLATION CAN BE ON OUTSIDE OF THE SILT FENCE AS DIRECTED.

INSTALL TEMPORARY SILT FENCE IN ACCORDANCE WITH SECTION 1605 OF THE STANDARD SPECIFICATIONS.

INSET A

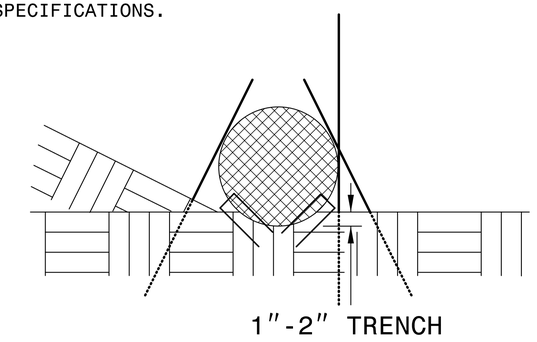

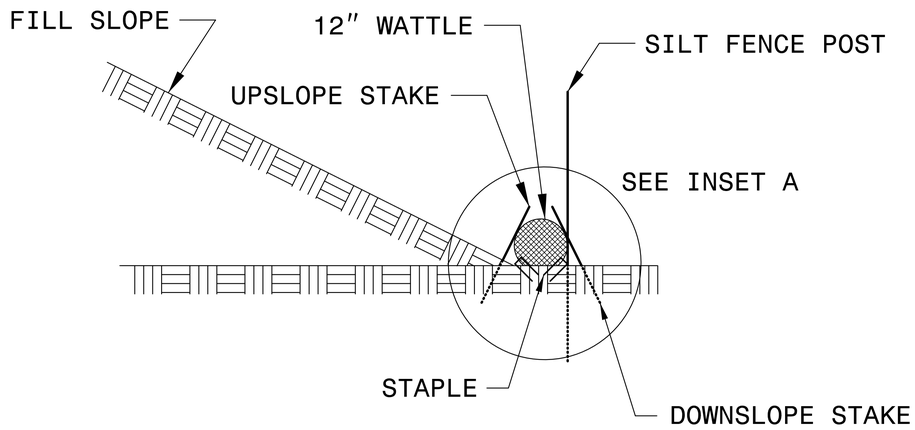

SIDE VIEW

PROJECT REFERENCE NO.	SHEET NO.
17BP.2.R.52	EC-4
R/W SHEET NO.	

COIR FIBER WATTLE BARRIER DETAIL

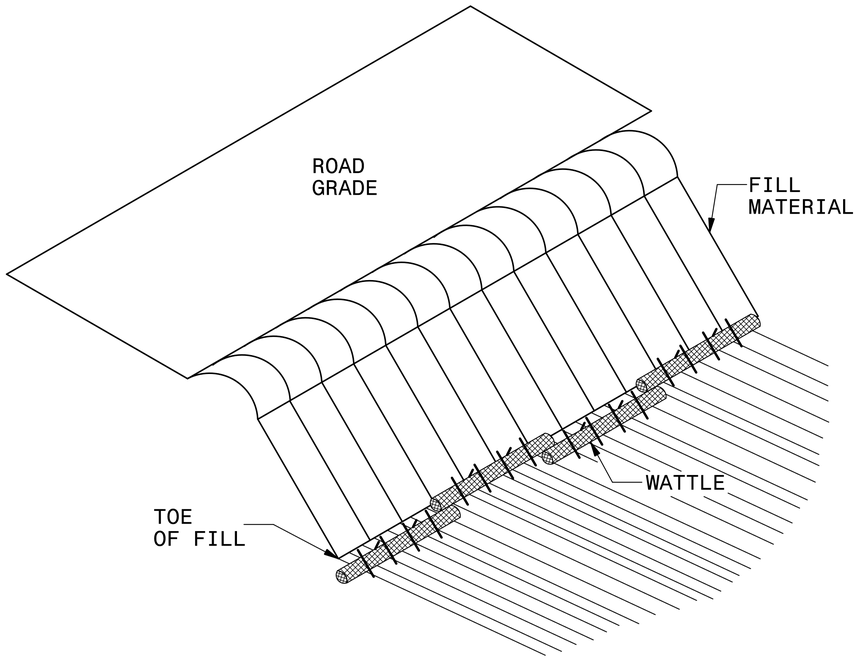

ISOMETRIC VIEW

NOTES:

USE MINIMUM 12 IN. DIAMETER COIR FIBER (COCONUT) WATTLE AND LENGTH OF 10 FT.

EXCAVATE A 1 TO 2 INCH TRENCH FOR WATTLE TO BE PLACED.

DO NOT PLACE WATTLES ON TOE OF SLOPE.

USE 2 FT. WOODEN STAKES WITH A 2 IN. BY 2 IN. NOMINAL CROSS SECTION.

INSTALL A MINIMUM OF 2 UPSLOPE STAKES AND 4 DOWNSLOPE STAKES AT AN ANGLE TO WEDGE WATTLE TO GROUND.

PROVIDE STAPLES MADE OF 0.125 IN. DIAMETER STEEL WIRE FORMED INTO A U SHAPE NOT LESS THAN 12″ IN LENGTH.

INSTALL STAPLES APPROXIMATELY EVERY 1 LINEAR FOOT ON BOTH SIDES OF WATTLE AND AT EACH END TO SECURE IT TO THE SOIL.

FOR BREAKS ALONG LARGE SLOPES, USE MAXIMUM SPACING OF 20 FT.

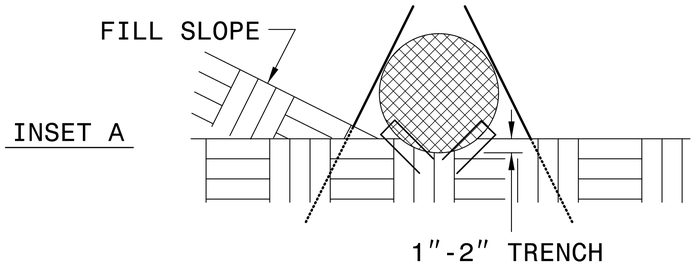

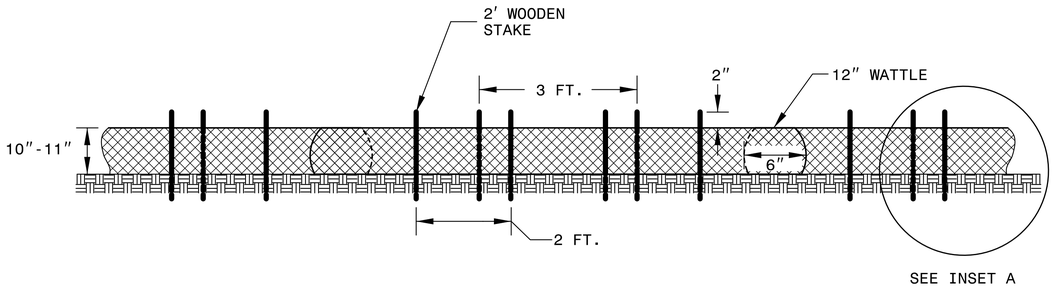

FRONT VIEW

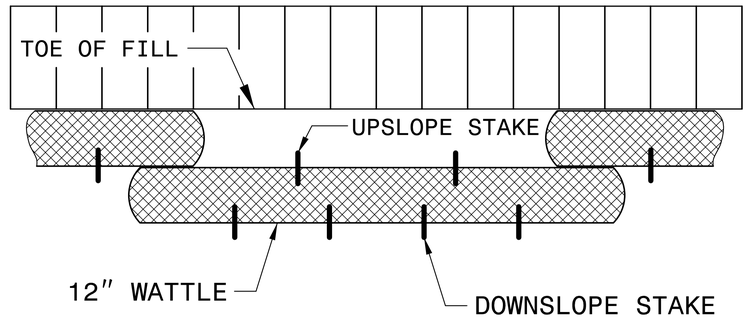

TOP VIEW

PROJECT REFERENCE NO.	SHEET NO.
17BP.2.R.52	EC-5

DIVISION OF HIGHWAYS
STATE OF NORTH CAROLINA

SOIL STABILIZATION TIMEFRAMES

SITE DESCRIPTION	STABILIZATION TIME	TIMEFRAME EXCEPTIONS
PERIMETER DIKES, SWALES, DITCHES AND SLOPES	7 DAYS	NONE
HIGH QUALITY WATER (HQW) ZONES	7 DAYS	NONE
SLOPES STEEPER THAN 3:1	7 DAYS	IF SLOPES ARE 10' OR LESS IN LENGTH AND ARE NOT STEEPER THAN 2:1, 14 DAYS ARE ALLOWED.
SLOPES 3:1 OR FLATTER	14 DAYS	7 DAYS FOR SLOPES GREATER THAN 50' IN LENGTH.
ALL OTHER AREAS WITH SLOPES FLATTER THAN 4:1	14 DAYS	NONE, EXCEPT FOR PERIMETERS AND HQW ZONES.

HNTB NORTH CAROLINA, P.C.
343 E. Six Forks Road, Suite 200
Raleigh, North Carolina 27609
NC License No: C-1554

PROJECT REFERENCE NO.	SHEET NO.
17BP.2.R.52	EC-6
R/W SHEET NO.	

JOHN F. WATSON
EROSION CONTROL
LEVEL III
CERTIFICATION #3419

REVISIONS

PLAN

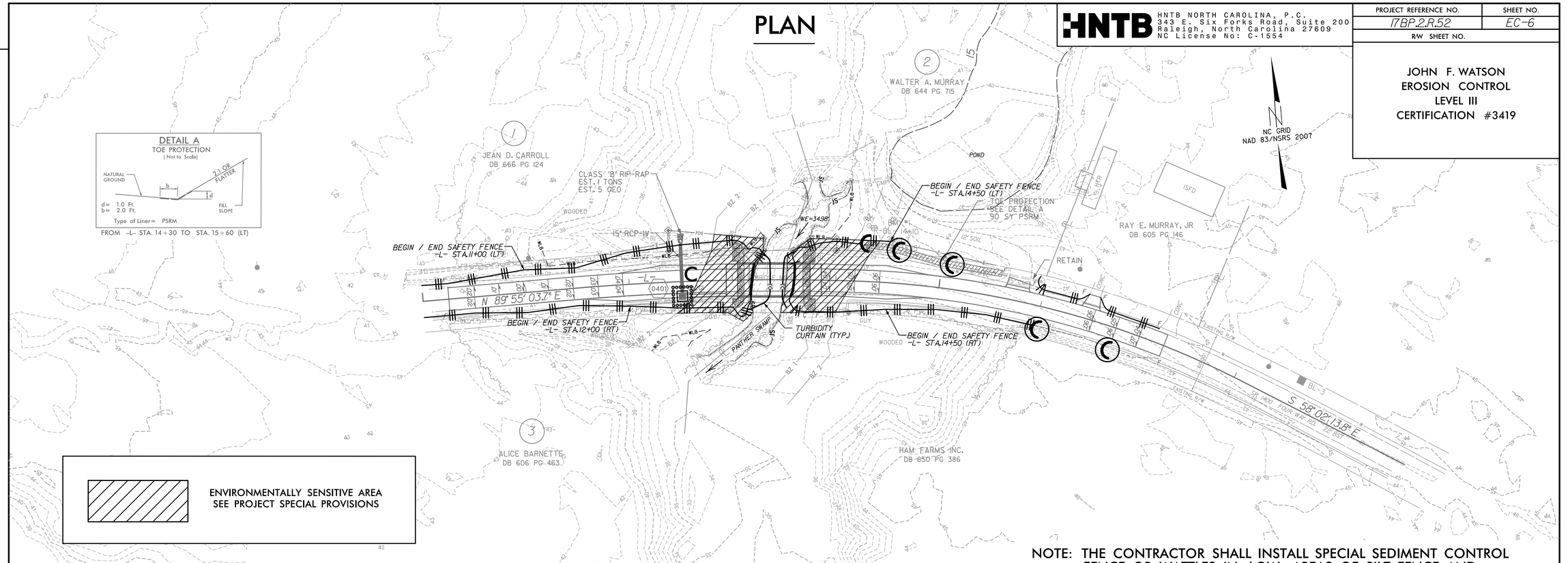

ENVIRONMENTALLY SENSITIVE AREA
SEE PROJECT SPECIAL PROVISIONS

NOTE: THE CONTRACTOR SHALL INSTALL SPECIAL SEDIMENT CONTROL FENCE OR WATTLES IN LOW AREAS OF SILT FENCE AND UNDER THE BRIDGE, AS NEEDED OR DIRECTED BY THE ENGINEER.

PROFILE

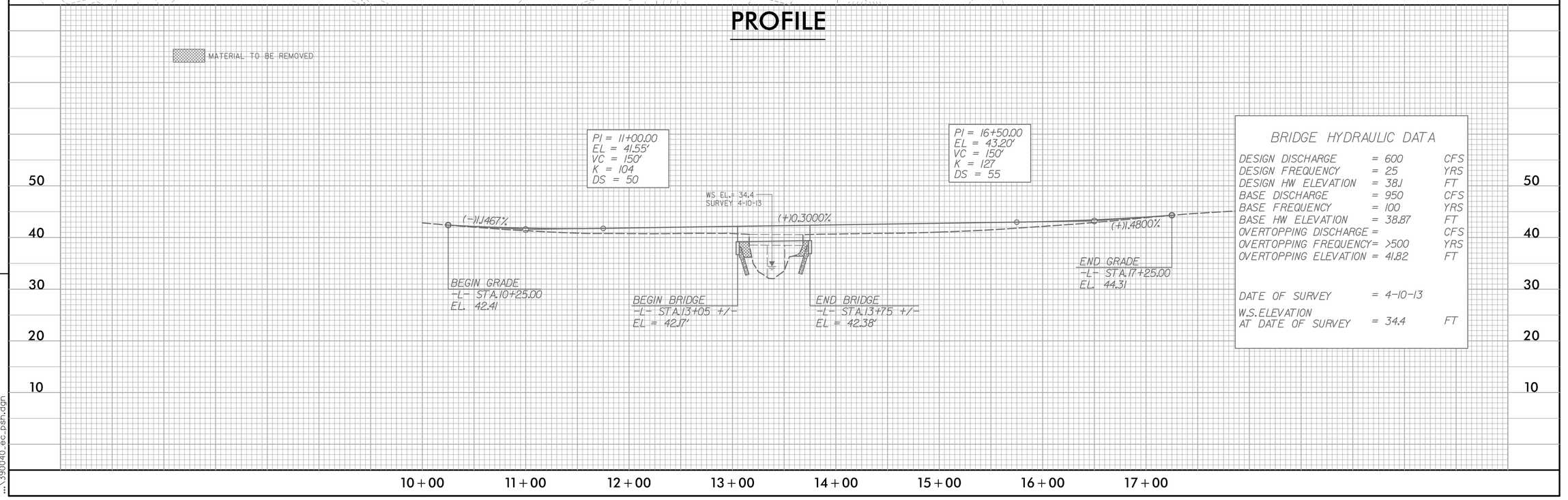

BRIDGE HYDRAULIC DATA

DESIGN DISCHARGE	= 600	CFS
DESIGN FREQUENCY	= 25	YRS
DESIGN HW ELEVATION	= 38.1	FT
BASE DISCHARGE	= 950	CFS
BASE FREQUENCY	= 100	YRS
BASE HW ELEVATION	= 38.87	FT
OVERTOPPING DISCHARGE	=	CFS
OVERTOPPING FREQUENCY	= >500	YRS
OVERTOPPING ELEVATION	= 41.82	FT
DATE OF SURVEY	= 4-10-13	
W.S. ELEVATION AT DATE OF SURVEY	= 34.4	FT

9/20/2013
9:53:52 AM
...\330040_ec_psh.dgn

5/14/99

PROJECT REFERENCE NO.	SHEET NO.
17BP.2.R.52	P-1
R/W SHEET NO.	

NC GRID
NAD 83/2011

Q2
PERMANENT WETLAND IMPACTS = 0.02 Ac /1025 SF
HAND CLEARING IN WETLANDS = 0.01 Ac /231 SF
PERMANENT STREAM IMPACTS = 0 LF
TEMPORARY STREAM IMPACTS = 0 LF
BUFFER ZONE 1 IMPACTS = 519 SF
BUFFER ZONE 2 IMPACTS = 268 SF

Q1
PERMANENT WETLAND IMPACTS = 0.0 Ac /0 SF
HAND CLEARING IN WETLANDS = 0.0 Ac /0 SF
PERMANENT STREAM IMPACTS = 0 LF
TEMPORARY STREAM IMPACTS = 0 LF
BUFFER ZONE 1 IMPACTS = 830 SF
BUFFER ZONE 2 IMPACTS = 384 SF

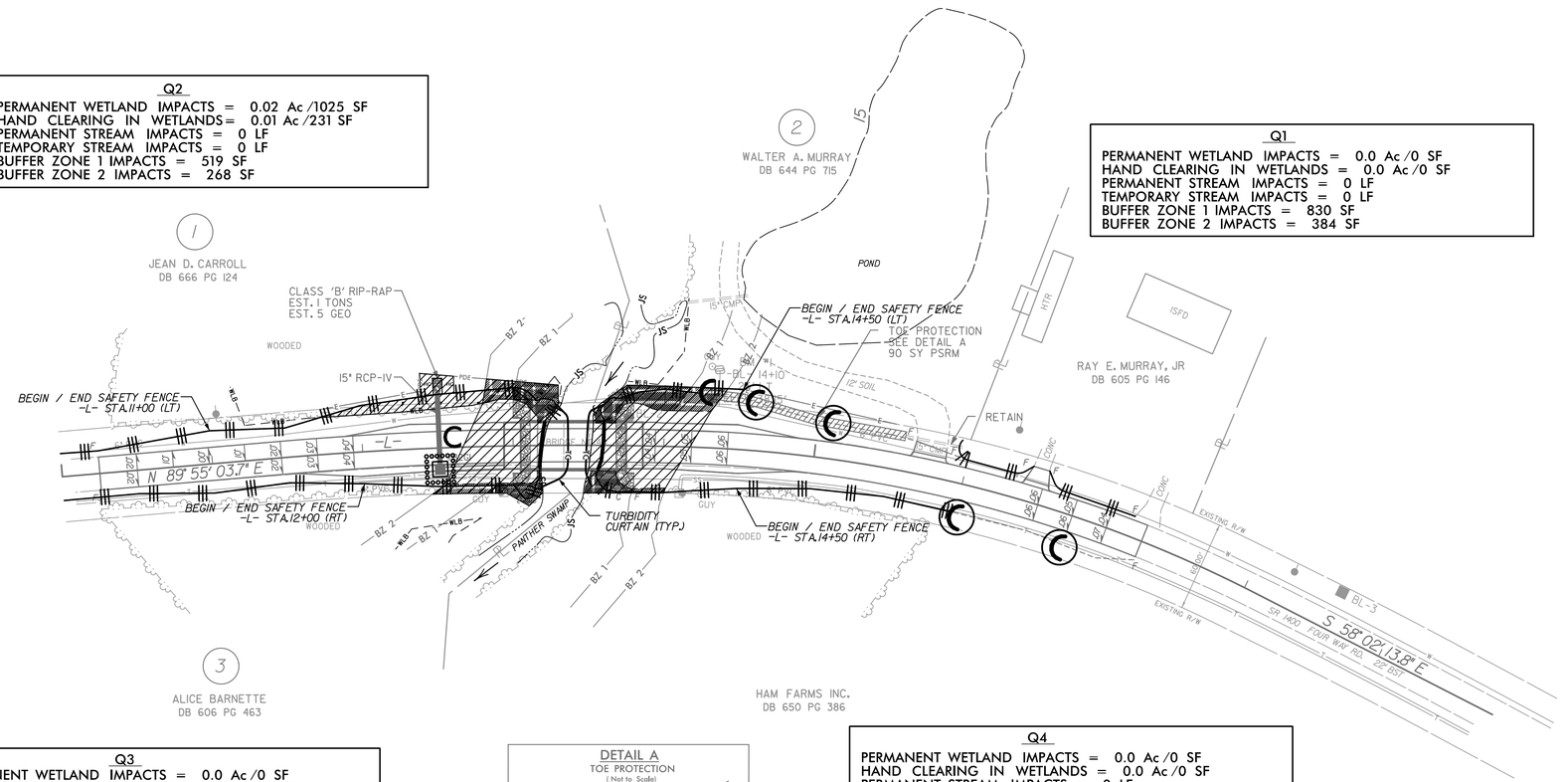

Q3
PERMANENT WETLAND IMPACTS = 0.0 Ac /0 SF
HAND CLEARING IN WETLANDS = 0.0 Ac /0 SF
PERMANENT STREAM IMPACTS = 0 LF
TEMPORARY STREAM IMPACTS = 0 LF
BUFFER ZONE 1 IMPACTS = 344 SF
BUFFER ZONE 2 IMPACTS = 223 SF

DETAIL A
TOE PROTECTION
(Not to Scale)

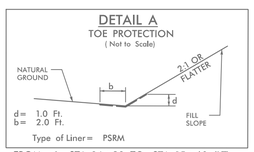

FROM -L- STA. 14+30 TO STA. 15+60 (LT)

Q4
PERMANENT WETLAND IMPACTS = 0.0 Ac /0 SF
HAND CLEARING IN WETLANDS = 0.0 Ac /0 SF
PERMANENT STREAM IMPACTS = 0 LF
TEMPORARY STREAM IMPACTS = 0 LF
BUFFER ZONE 1 IMPACTS = 338 SF
BUFFER ZONE 2 IMPACTS = 65 SF

IMPACT SUMMARY:
404 WETLAND IMPACTS = 0.03 AC
STREAM IMPACTS = 0 FT.
BUFFER ZONE 1 IMPACT = 2031 SQ FT.
BUFFER ZONE 2 IMPACT = 940 SQ FT.

LEGEND
- ALLOWABLE IMPACTS ZONE 1
- ALLOWABLE IMPACTS ZONE 2
- HC / HC — DENOTES HAND CLEARING
- F / F — DENOTES FILL IN WETLAND

NCDOT
17BP.2.R.52 GREENE COUNTY
REPLACE BRIDGE NO. 0040
SR 1400 (FOUR WAY RD.)
OVER PANTHER SWAMP
BETWEEN US HWY 258
AND NC HWY 123

SCALE: 1" = 50'
OCTOBER 29, 2013
FOR PERMITTING ONLY:
NOT FOR CONSTRUCTION

PROJ. REFERENCE NO.	SHEET NO.	TOTAL SHEETS
17BP.2.R.52	X-1	5

Note: Approximate quantities only. Unclassified Excavation, Borrow Excavation, Shoulder Borrow, Fine Grading, Clearing and Grubbing, Breaking of Existing Pavement, and Removal of Existing Pavement will be paid for at the contract lump sum price for "Grading."

STATE OF NORTH CAROLINA
DIVISION OF HIGHWAYS

CROSS–SECTION SUMMARY
IN CUBIC YARDS

NOTE: EMBANKMENT COLUMN DOES NOT INCLUDE BACKFILL FOR UNDERCUT

STATION	UNCLASSIFIED EXCAVATION	EMBANK.	UNDERCUT
–L– STA. 10+00.00	0	0	0
–L– STA. 10+50.00	14	1	0
–L– STA. 11+00.00	19	9	0
–L– STA. 11+50.00	5	19	0
–L– STA. 12+00.00	0	53	0
–L– STA. 12+50.00	0	116	0
–L– STA. 13+00.00	0	155	0
–L– STA. 13+50.00	105	16	0
–L– STA. 14+00.00	156	42	0
–L– STA. 14+50.00	0	141	0
–L– STA. 15+00.00	0	111	0
–L– STA. 15+50.00	0	67	0
–L– STA. 16+00.00	0	36	0
–L– STA. 16+50.00	5	15	0
–L– STA. 17+00.00	20	6	0
–L– STA. 17+50.00	14	1	0

02/03/98
12:23:00 PM
\\Roadway\XSC\390040_rdy_xpl.dgn
$$$$USERNAME$$$$

PROJ. REFERENCE NO.	SHEET NO.	TOTAL SHEETS
17BP.2.R.52	X-2	5

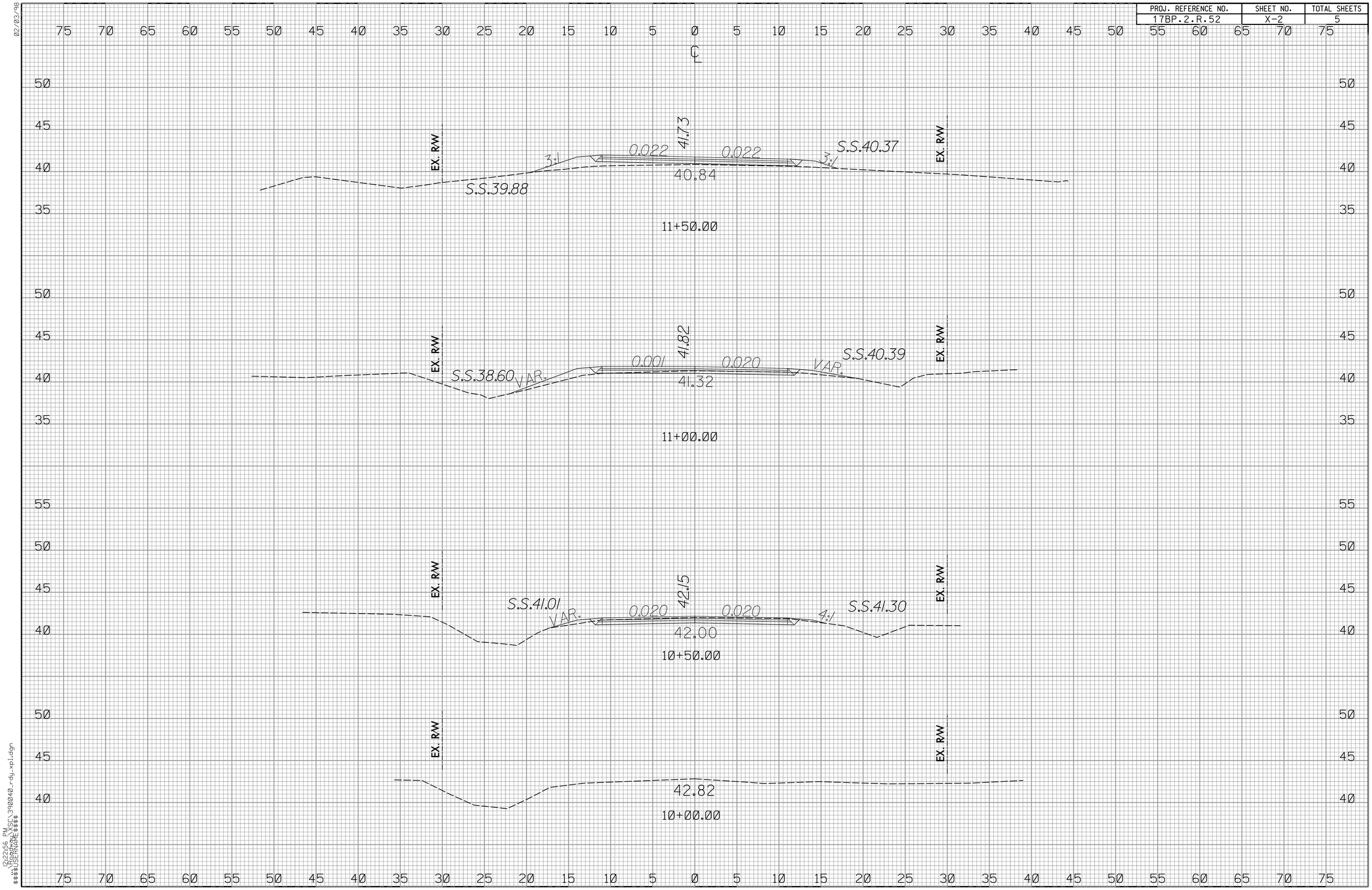

02/03/98

12:22:56 PM
...\Roadway\XSC\390040_rdy_xpl.dgn
$$$$USERNAME$$$$

PROJ. REFERENCE NO.	SHEET NO.	TOTAL SHEETS
17BP.2.R.52	X-3	5

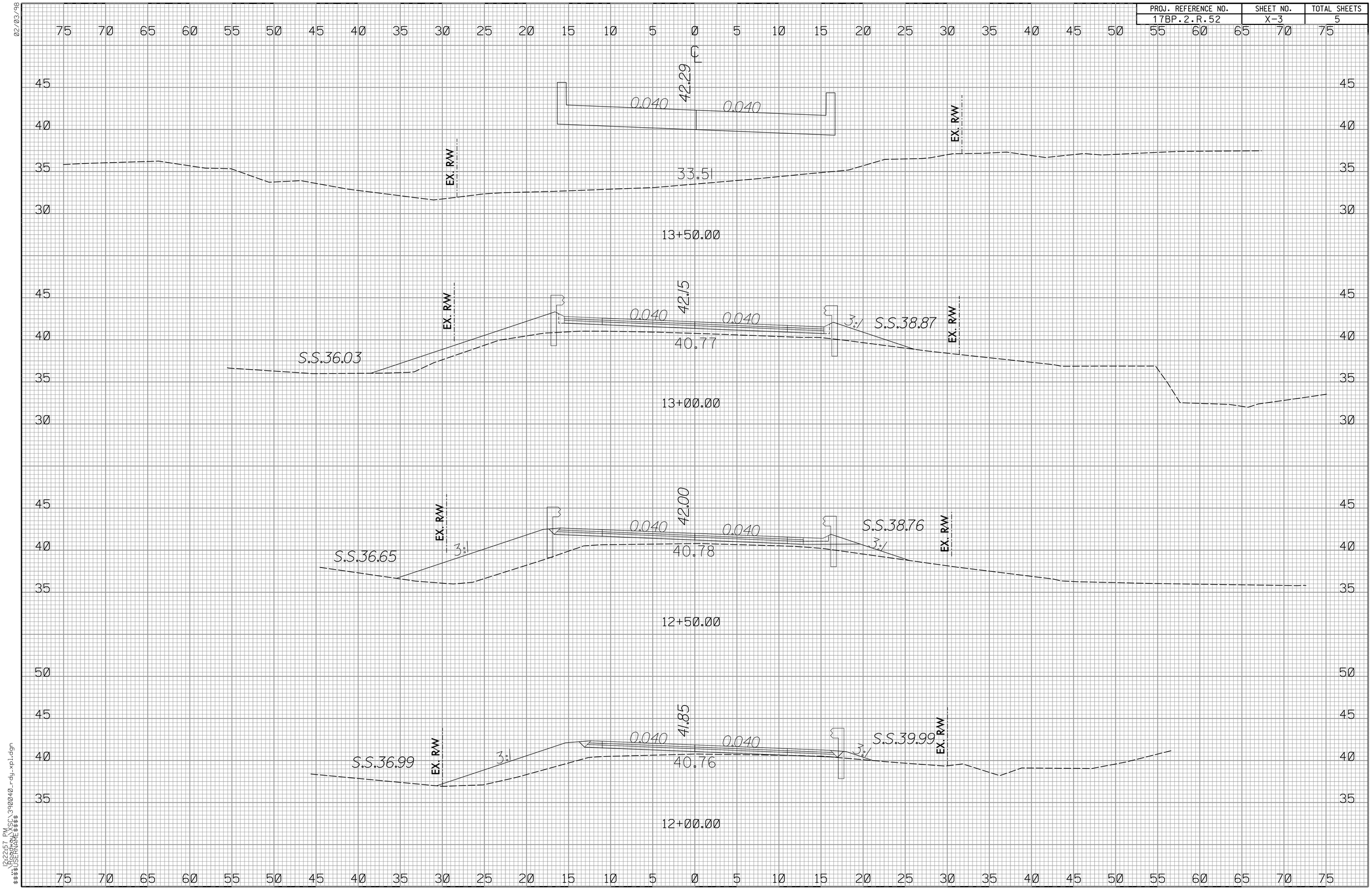

02/03/98

12:22:57 PM
...\Roadway\XSC\390040_rdy_xpl.dgn
$$$$USERNAME$$$$

PROJ. REFERENCE NO.	SHEET NO.	TOTAL SHEETS
17BP.2.R.52	X-4	5

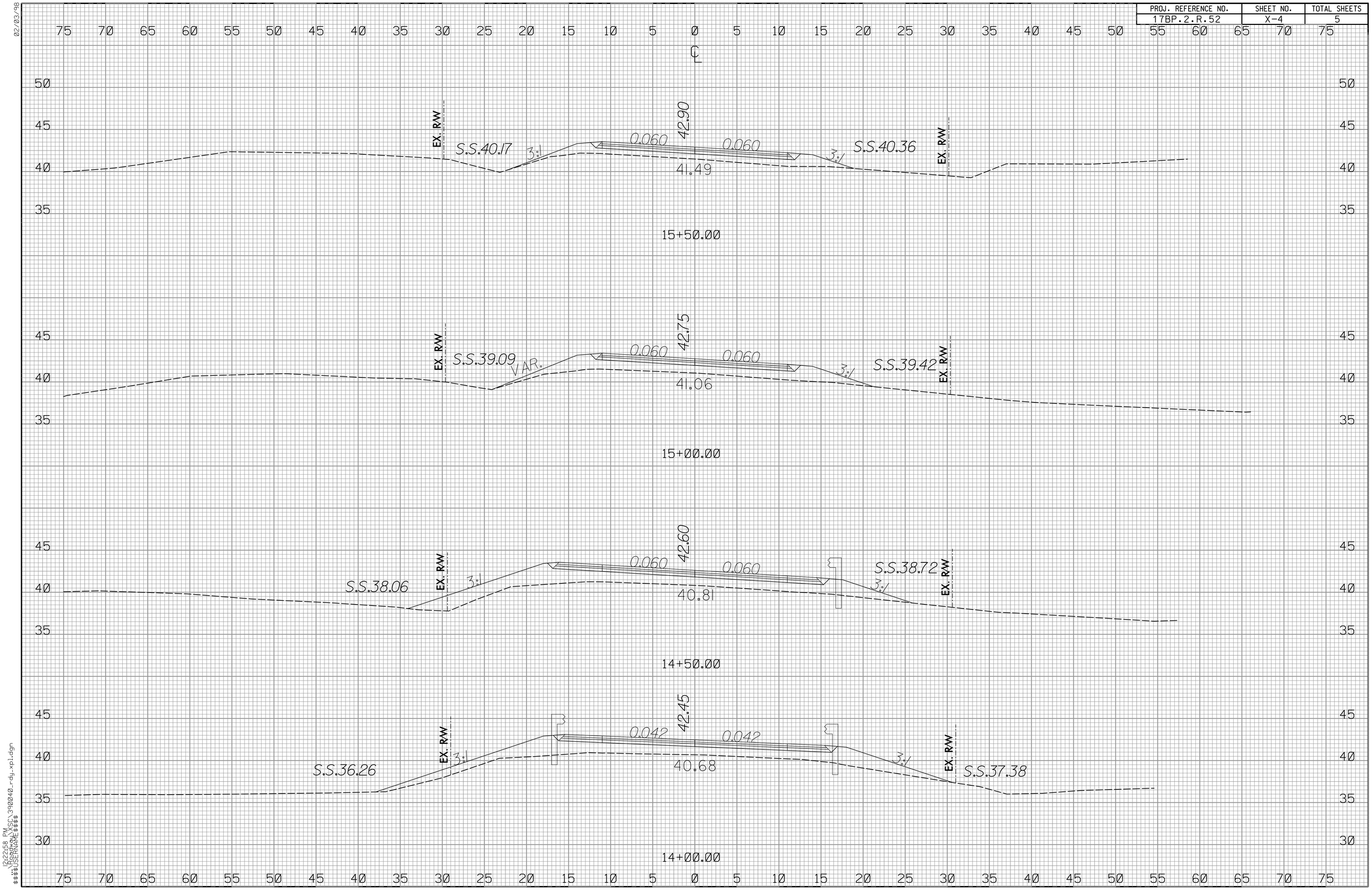

02/03/98

12:22:58 PM
...\Roadway\XSC\390040_rdy_xpl.dgn
$$$$USERNAME$$$$

PROJ. REFERENCE NO.	SHEET NO.	TOTAL SHEETS
17BP.2.R.52	X-5	5

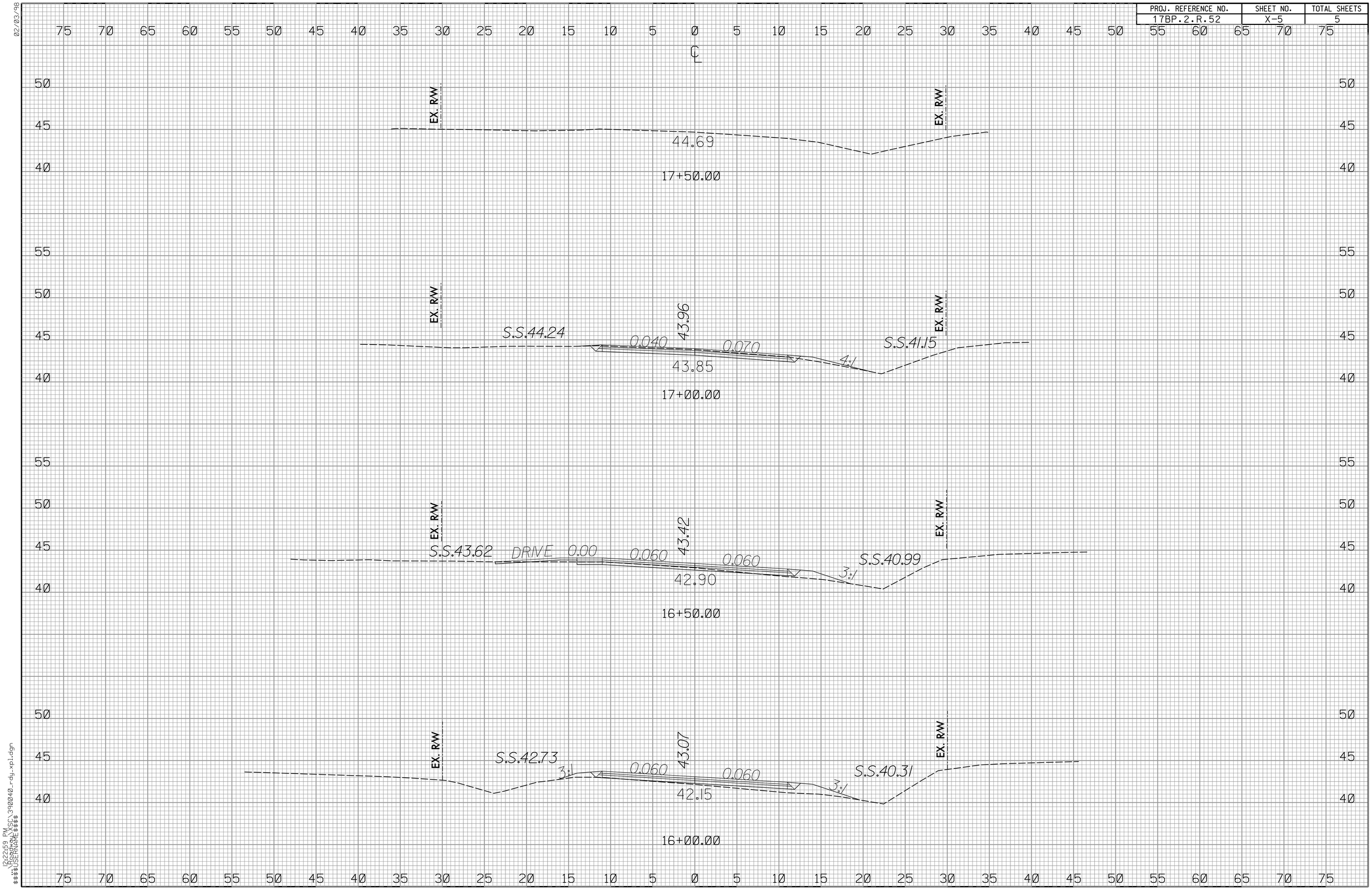

02/03/98

12:22:59 PM
...\Roadway\XSC\390040_rdy_xpl.dgn
$$$$USERNAME$$$$

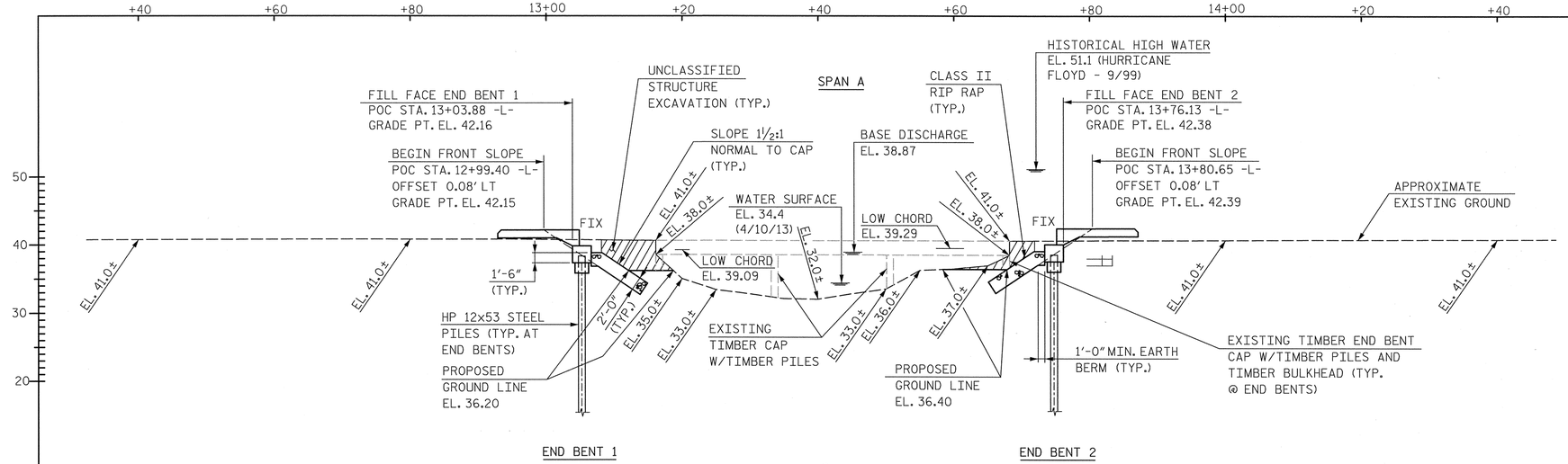

SECTION ALONG ℄ SURVEY -L-

NOTE: THE APPROXIMATE NATURAL GROUND ELEVATIONS ARE ALONG THE EDGE OF BRIDGE ON THE UPSTREAM SIDE.

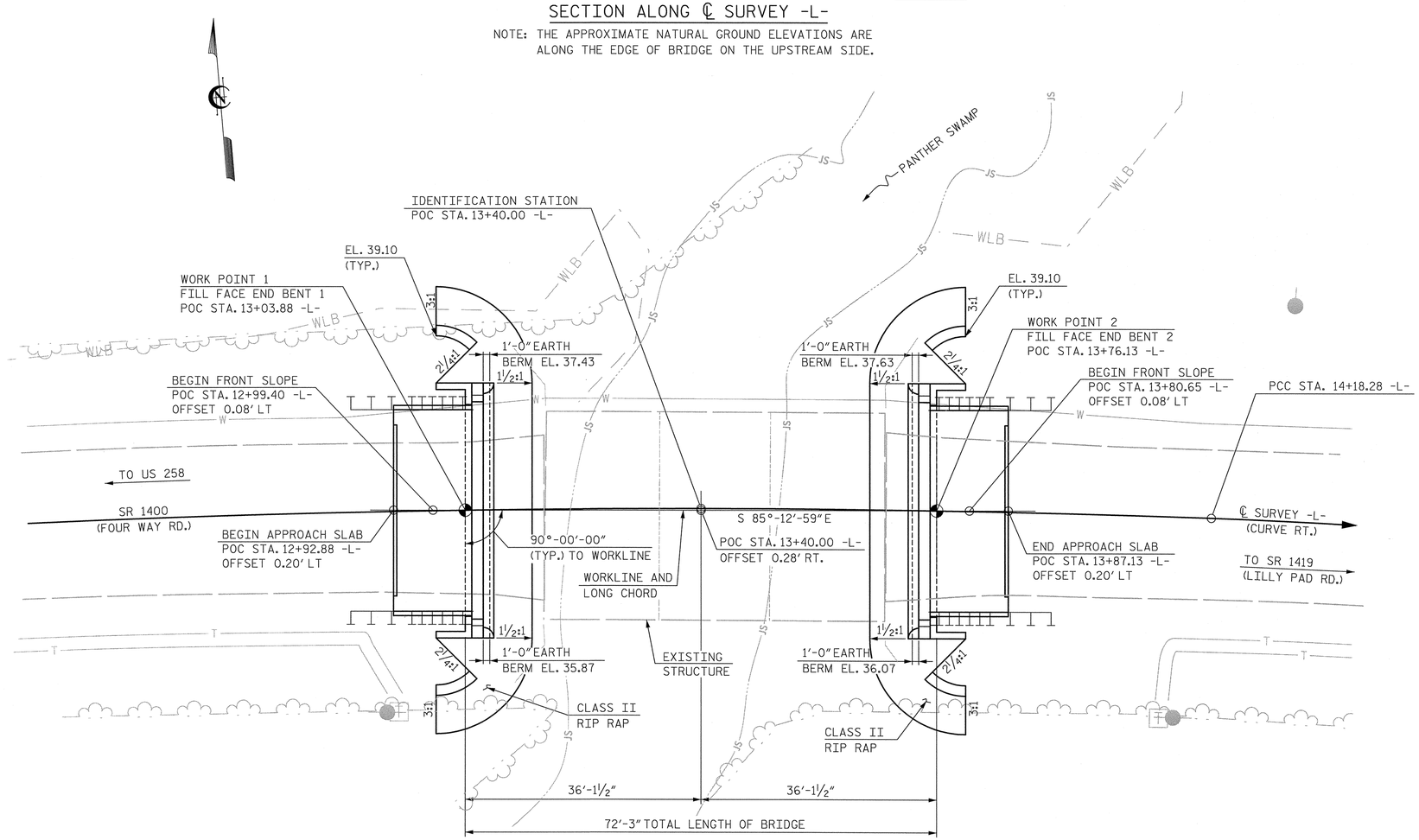

PLAN

NOTES: PILES NOT SHOWN FOR CLARITY.

WORKLINE FOR BRIDGE SHALL BE THE ROADWAY LONG CHORD BETWEEN FILL FACE WORK POINTS AND ITS EXTENSION.

FOR GENERAL NOTES, SEE SHEET 2.

BRIDGE HYDRAULIC DATA

DESIGN DISCHARGE	=	600 CFS
FREQUENCY OF DESIGN FLOOD	=	25 YR
DESIGN HIGH WATER ELEVATION	=	38.1 FT.
DRAINAGE AREA	=	4.6 SQ. MI.
BASIC DISCHARGE (Q100)	=	950 CFS
BASIC HIGH WATER ELEVATION	=	38.87 FT.

OVERTOPPING FLOOD DATA

OVERTOPPING DISCHARGE	=	- CFS
FREQUENCY OF OVERTOPPING FLOOD	=	>500(+) YR
OVERTOPPING FLOOD ELEVATION	=	41.82 FT.

NOTE: OVERTOPPING OCCURS AT ROADWAY STA. 11+00.00

PI STA. = 11+00.00
ELEV = 41.55
V.C. = 150'

PI STA. = 16+50.00
ELEV = 43.20
V.C. = 150'

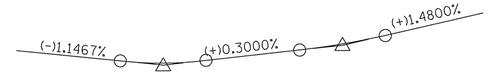

GRADE DATA -L-

CURVE DATA -L-

PI STA. = 12+81.64	PI STA. = 16+16.34
△ = 6°48'56.8" (RT)	△ = 25°13'45.6" (RT)
D = 2°29'28.0"	D = 6°28'26.8"
L = 273.60'	L = 389.70'
T = 136.96'	T = 198.06'
R = 2,300.00'	R = 885.00'

PROJECT NO. 17BP.2.R.52

GREENE COUNTY

STATION: 13+40.00 -L-

SHEET 1 OF 2 REPLACES BRIDGE NO. 0040

STATE OF NORTH CAROLINA
DEPARTMENT OF TRANSPORTATION
RALEIGH

GENERAL DRAWING FOR BRIDGE ON SR 1400 OVER PANTHER SWAMP BETWEEN US 258 AND SR 1419

HNTB NORTH CAROLINA, P.C.
NC License No. C-1554
343 E. Six Forks Rd., Suite 200, Raleigh, N.C. 27609

DRAWN BY M. WRIGHT DATE 8/13
CHECKED BY D. RAGAN DATE 8/13
DWG. NO. 1

REVISIONS						SHEET NO.
NO.	BY	DATE	NO.	BY	DATE	S-1
1			3			TOTAL SHEETS
2			4			13

BM - "BM1", 32.5' LT OF POC STA. 14+29.7 -L-, RR SPIKE IN BASE OF POWER POLE, EL. 38.15

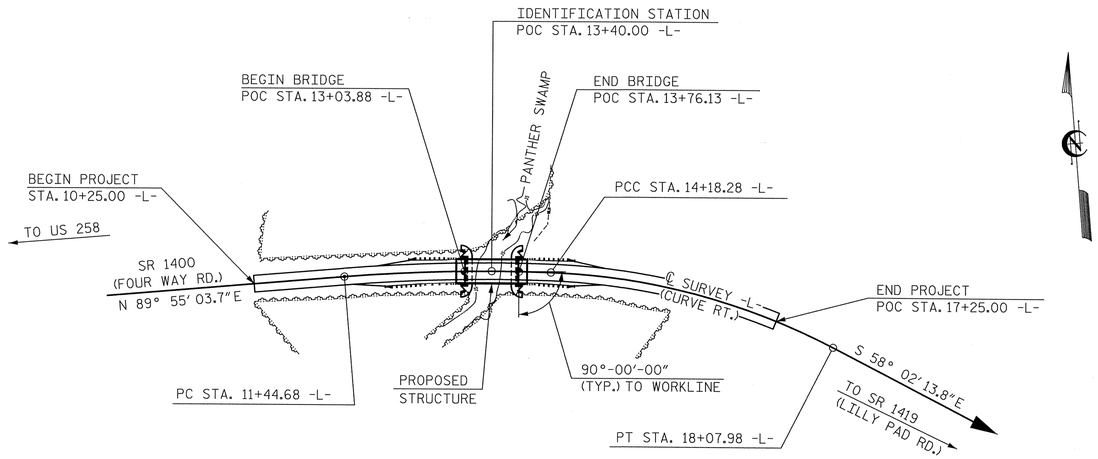

LOCATION SKETCH

FOR UTILITY INFORMATION, SEE UTILITY PLANS AND SPECIAL PROVISIONS.

FOUNDATION NOTES:

FOR PILES, SEE SECTION 450 OF THE STANDARD SPECIFICATIONS.

PILES AT END BENT NO. 1 AND END BENT NO. 2 ARE DESIGNED FOR A FACTORED RESISTANCE OF 81 TONS PER PILE.

DRIVE PILES AT END BENT NO. 1 AND END BENT NO. 2 TO A REQUIRED DRIVING RESISTANCE OF 135 TONS PER PILE.

STEEL H-PILE POINTS ARE REQUIRED FOR STEEL H-PILES AT END BENT NO. 1 AND END BENT NO. 2. FOR STEEL PILE POINTS, SEE SECTION 450 OF THE STANDARD SPECIFICATIONS.

TESTING PILES WITH THE PILE DRIVING ANALYZER (PDA) DURING DRIVING, RESTRIKING OR REDRIVING MAY BE REQUIRED. THE ENGINEER WILL DETERMINE THE NEED FOR PDA TESTING. FOR PDA TESTING, SEE SECTION 450 OF THE STANDARD SPECIFICATIONS AND FOR PILE DRIVING CRITERIA, SEE PILE DRIVING CRITERIA PROVISION.

TOTAL BILL OF MATERIAL

	REMOVAL OF EXISTING STRUCTURE AT STATION 13+40.00 -L-	PDA TESTING	UNCLASSIFIED STRUCTURE EXCAVATION AT STATION 13+40.00 -L-	CLASS A CONCRETE	BRIDGE APPROACH SLABS AT STATION 13+40.00 -L-	REINFORCING STEEL	HP 12x53 STEEL PILES		STEEL PILE POINTS	PILE REDRIVES	VERTICAL CONCRETE BARRIER RAIL	RIP RAP CLASS II (2'-0" THICK)	GEOTEXTILE FOR DRAINAGE	ELASTOMERIC BEARINGS	3'-0"x2'-0" PRESTRESSED CONCRETE CORED SLABS	
	LUMP SUM	EA.	LUMP SUM	CU. YDS.	LUMP SUM	LBS.	NO.	LIN. FT.	EA.	EA.	LIN. FT.	TONS	SQ. YDS.	LUMP SUM	NO.	LIN. FT.
SUPERSTRUCTURE	LUMP SUM	———	———	———	LUMP SUM	———	—	———	———	———	140.25	———	———	LUMP SUM	11	770
END BENT NO. 1	———	———	LUMP SUM	14.5	———	2,127	7	350	7	4	———	120	134	———	—	———
END BENT NO. 2	———	———	LUMP SUM	14.5	———	2,127	7	315	7	4	———	119	132	———	—	———
TOTAL	LUMP SUM	1	LUMP SUM	29.0	LUMP SUM	4,254	14	665	14	8	140.25	239	266	LUMP SUM	11	770

GENERAL NOTES

ASSUMED LIVE LOAD = HL-93 OR ALTERNATE LOADING.

THIS BRIDGE HAS BEEN DESIGNED IN ACCORDANCE WITH THE REQUIREMENTS OF THE AASHTO LRFD BRIDGE DESIGN SPECIFICATIONS.

THIS BRIDGE IS LOCATED IN SEISMIC ZONE 1.

THIS BRIDGE SHALL BE CONSTRUCTED USING TOP-DOWN CONSTRUCTION METHODS. THE USE OF A TEMPORARY CAUSEWAY OR WORK BRIDGE IS NOT PERMITTED. CONTRACTOR SHALL NOT PLACE OR OPERATE A CRANE ON SPAN A.

FOR OTHER DESIGN DATA AND GENERAL NOTES, SEE SHEET SN.

FOR SUBMITTAL OF WORKING DRAWINGS, SEE SPECIAL PROVISIONS.

FOR FALSEWORK AND FORMWORK, SEE SPECIAL PROVISIONS.

FOR CRANE SAFETY, SEE SPECIAL PROVISIONS.

FOR GROUT FOR STRUCTURES, SEE SPECIAL PROVISIONS.

THE MATERIAL SHOWN IN THE CROSS-HATCHED AREA SHALL BE EXCAVATED FOR A DISTANCE OF 19.5 FT EACH SIDE OF CENTERLINE ROADWAY AS DIRECTED BY THE ENGINEER. THIS WORK WILL BE PAID FOR AT THE CONTRACT LUMP SUM PRICE FOR UNCLASSIFIED STRUCTURE EXCAVATION. SEE SECTION 412 OF THE STANDARD SPECIFICATIONS.

THE EXISTING 3 SPAN STRUCTURE WITH SPAN LENGTHS OF 17'-10", 17'-1", AND 17'-10" WITH REINFORCED CONCRETE DECK AND 25 LINES OF 6x12 TIMBER JOISTS @ VARIOUS CENTERS WITH A 33'-4" OUT TO OUT DECK WIDTH ON TIMBER CAPS AND TIMBER PILES SHALL BE REMOVED. IN ADDITION, ANY PILES REMAINING FROM PREVIOUS BRIDGE CONSTRUCTION OR MAINTENANCE OPERATIONS SHALL BE REMOVED AND INCLUDED IN THE LUMP SUM PAY ITEM FOR "REMOVAL OF EXISTING STRUCTURE AT STATION 13+40.00 -L-".

THE SUBSTRUCTURE OF THE EXISTING BRIDGE INDICATED ON THE PLANS IS FROM THE BEST INFORMATION AVAILABLE. SINCE THIS INFORMATION IS SHOWN FOR THE CONVENIENCE OF THE CONTRACTOR, THE CONTRACTOR SHALL HAVE NO CLAIM WHATSOEVER AGAINST THE DEPARTMENT OF TRANSPORTATION FOR ANY DELAYS OR ADDITIONAL COST INCURRED BASED ON DIFFERENCES BETWEEN THE EXISTING BRIDGE SUBSTRUCTURE SHOWN ON THE PLANS AND THE ACTUAL CONDITIONS AT THE PROJECT SITE.

REMOVAL OF THE EXISTING BRIDGE SHALL BE PERFORMED SO AS NOT TO ALLOW DEBRIS TO FALL INTO THE WATER. THE CONTRACTOR SHALL REMOVE THE BRIDGE AND SUBMIT PLANS FOR DEMOLITION IN ACCORDANCE WITH ARTICLE 402-2 OF THE STANDARD SPECIFICATIONS.

THIS STRUCTURE HAS BEEN DESIGNED IN ACCORDANCE WITH "HEC 18 - EVALUATING SCOUR AT BRIDGES."

FOR EROSION CONTROL MEASURES SEE EROSION CONTROL PLANS.

ASPHALT WEARING SURFACE IS INCLUDED IN ROADWAY QUANTITY ON ROADWAY PLANS.

NORTH CAROLINA PROFESSIONAL SEAL 12916 ENGINEER PAUL J. BARBER 10/29/13

PROJECT NO. 17BP.2.R.52

GREENE COUNTY

STATION: 13+40.00 -L-

SHEET 2 OF 2

STATE OF NORTH CAROLINA
DEPARTMENT OF TRANSPORTATION
RALEIGH

GENERAL DRAWING FOR BRIDGE ON SR 1400 OVER PANTHER SWAMP BETWEEN US 258 AND SR 1419

HNTB NORTH CAROLINA, P.C.
NC License No. C-1554
343 E. Six Forks Rd., Suite 200, Raleigh, N.C. 27609

DRAWN BY M. WRIGHT DATE 8/13
CHECKED BY D. RAGAN DATE 8/13

DWG. NO. 2

REVISIONS						SHEET NO.
NO.	BY	DATE	NO.	BY	DATE	S-2
1			3			TOTAL SHEETS
2			4			13

LOAD AND RESISTANCE FACTOR RATING (LRFD) SUMMARY FOR PRESTRESSED CONCRETE GIRDERS

LEVEL		VEHICLE	WEIGHT (W) (TONS)	CONTROLLING LOAD RATING	MINIMUM RATING FACTORS (RF)	TONS = W X RF	STRENGTH I LIMIT STATE										SERVICE III LIMIT STATE						COMMENT NUMBER
								MOMENT					SHEAR					MOMENT						
							LIVELOAD FACTORS	DISTRIBUTION FACTORS (DF)	RATING FACTOR	SPAN	GIRDER LOCATION	DISTANCE FROM LEFT END OF SPAN (ft)	DISTRIBUTION FACTORS (DF)	RATING FACTOR	SPAN	GIRDER LOCATION	DISTANCE FROM LEFT END OF SPAN (ft)	LIVELOAD FACTORS	DISTRIBUTION FACTORS (DF)	RATING FACTOR	SPAN	GIRDER LOCATION	DISTANCE FROM LEFT END OF SPAN (ft)	
DESIGN LOAD RATING		HL-93(Inv)	N/A	1	1.006	--	1.75	0.273	1.03	70'	EL	34.5	0.507	1.32	70'	EL	6.9	0.80	0.273	**1.01**	70'	EL	**34.5**	
		HL-93(Opr)	N/A	--	1.341	--	1.35	0.273	1.34	70'	EL	34.5	0.507	1.72	70'	EL	6.9	N/A	--	--	--	--	--	
		HS-20(Inv)	36.000	2	1.306	47.02	1.75	0.273	1.34	70'	EL	34.5	0.507	1.65	70'	EL	6.9	0.80	0.273	**1.31**	70'	EL	**34.5**	
		HS-20(Opr)	36.000	--	1.74	62.64	1.35	0.273	1.74	70'	EL	34.5	0.507	2.14	70'	EL	6.9	N/A	--	--	--	--	--	
LEGAL LOAD RATING	SV	SNSH	13.500	--	2.917	39.379	1.4	0.273	3.75	70'	EL	34.5	0.507	4.87	70'	EL	6.9	0.80	0.273	2.92	70'	EL	34.5	
		SNGARBS2	20.000	--	2.187	43.741	1.4	0.273	2.81	70'	EL	34.5	0.507	3.47	70'	EL	6.9	0.80	0.273	2.19	70'	EL	34.5	
		SNAGRIS2	22.000	--	2.077	45.69	1.4	0.273	2.67	70'	EL	34.5	0.507	3.23	70'	EL	6.9	0.80	0.273	2.08	70'	EL	34.5	
		SNCOTTS3	27.250	--	1.452	39.565	1.4	0.273	1.87	70'	EL	34.5	0.507	2.43	70'	EL	6.9	0.80	0.273	1.45	70'	EL	34.5	
		SNAGGRS4	34.925	--	1.218	42.554	1.4	0.273	1.57	70'	EL	34.5	0.507	2.03	70'	EL	6.9	0.80	0.273	1.22	70'	EL	34.5	
		SNS5A	35.550	--	1.191	42.346	1.4	0.273	1.53	70'	EL	34.5	0.507	2.06	70'	EL	6.9	0.80	0.273	1.19	70'	EL	34.5	
		SNS6A	39.950	--	1.095	43.747	1.4	0.273	1.41	70'	EL	34.5	0.507	1.88	70'	EL	6.9	0.80	0.273	1.10	70'	EL	34.5	
		SNS7B	42.000	--	1.043	43.801	1.4	0.273	1.34	70'	EL	34.5	0.507	1.85	70'	EL	6.9	0.80	0.273	1.04	70'	EL	34.5	
	TTST	TNAGRIT3	33.000	--	1.336	44.087	1.4	0.273	1.72	70'	EL	34.5	0.507	2.23	70'	EL	6.9	0.80	0.273	1.34	70'	EL	34.5	
		TNT4A	33.075	--	1.342	44.401	1.4	0.273	1.72	70'	EL	34.5	0.507	2.17	70'	EL	6.9	0.80	0.273	1.34	70'	EL	34.5	
		TNT6A	41.600	--	1.1	45.746	1.4	0.273	1.41	70'	EL	34.5	0.507	1.98	70'	EL	6.9	0.80	0.273	1.10	70'	EL	34.5	
		TNT7A	42.000	--	1.106	46.462	1.4	0.273	1.42	70'	EL	34.5	0.507	1.94	70'	EL	6.9	0.80	0.273	1.11	70'	EL	34.5	
		TNT7B	42.000	--	1.147	48.18	1.4	0.273	1.47	70'	EL	34.5	0.507	1.8	70'	EL	6.9	0.80	0.273	1.15	70'	EL	34.5	
		TNAGRIT4	43.000	--	1.089	46.838	1.4	0.273	1.4	70'	EL	34.5	0.507	1.74	70'	EL	6.9	0.80	0.273	1.09	70'	EL	34.5	
		TNAGT5A	45.000	--	1.026	46.175	1.4	0.273	1.32	70'	EL	34.5	0.507	1.74	70'	EL	6.9	0.80	0.273	1.03	70'	EL	34.5	
		TNAGT5B	45.000	3	1.013	45.579	1.4	0.273	1.3	70'	EL	34.5	0.507	1.66	70'	EL	6.9	0.80	0.273	**1.01**	70'	EL	**34.5**	

LOAD FACTORS:

DESIGN LOAD RATING FACTORS	LIMIT STATE	γ_{DC}	γ_{DW}
	STRENGTH I	1.25	1.50
	SERVICE III	1.00	1.00

NOTES:

MINIMUM RATING FACTORS ARE BASED ON THE STRENGTH I AND SERVICE III LIMIT STATES.

ALLOWABLE STRESSES FOR SERVICE III LIMIT STATE ARE AS REQUIRED FOR DESIGN.

COMMENTS:

1.
2.
3.
4.

(#) CONTROLLING LOAD RATING
(1) DESIGN LOAD RATING (HL-93)
(2) DESIGN LOAD RATING (HS-20)
(3) LEGAL LOAD RATING **
** SEE CHART FOR VEHICLE TYPE
GIRDER LOCATION
I - INTERIOR GIRDER
EL - EXTERIOR LEFT GIRDER
ER - EXTERIOR RIGHT GIRDER

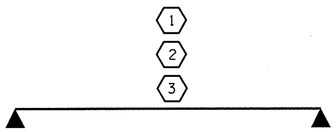

LRFR SUMMARY

FOR SPAN 'A'

PROJECT NO. 17BP.2.R.52

GREENE COUNTY

STATION: 13+40.00 -L-

STATE OF NORTH CAROLINA
DEPARTMENT OF TRANSPORTATION
RALEIGH

STANDARD
LRFR SUMMARY FOR 70' CORED SLAB UNIT 90° SKEW
(NON-INTERSTATE TRAFFIC)

REVISIONS						SHEET NO.
NO.	BY:	DATE:	NO.	BY:	DATE:	S-3
1			3			TOTAL SHEETS
2			4			13

NORTH CAROLINA PROFESSIONAL SEAL 22005 ENGINEER KEITH PASCHAL

10-25-13

ASSEMBLED BY :	C.B. PRUETT	DATE : 10/01/13
CHECKED BY :	M.D. PISO	DATE : 10/11/13
DRAWN BY : CVC	6/10	
CHECKED BY : DNS	6/10	

25-OCT-2013 07:36
S:\DPGI\Keith\17BP.2.R.52\Final Plans\17BP.2.R.52_SD_CS.dgn
kpaschal

STD. NO. 24LRFR1_90S_70L

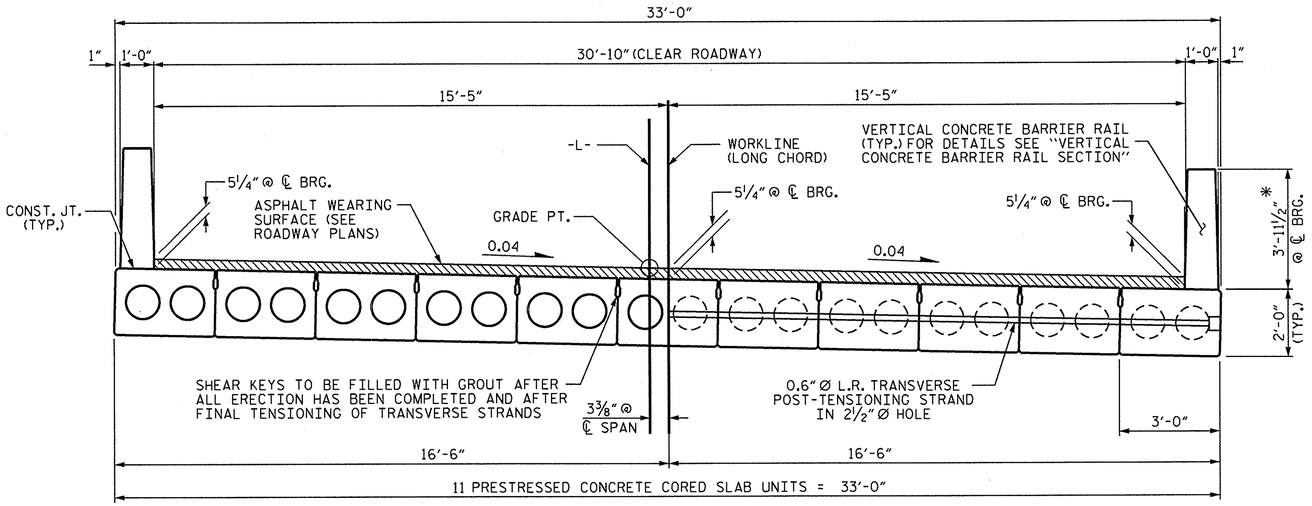

HALF SECTION THROUGH VOIDS

HALF SECTION AT INTERMEDIATE DIAPHRAGMS

TYPICAL SECTION

* - THE MAXIMUM BARRIER RAIL HEIGHT AND ASPHALT THICKNESS IS SHOWN. THE HEIGHT OF THE BARRIER RAIL AND ASPHALT THICKNESS VARIES WHILE THE TOP OF THE BARRIER RAIL FOLLOWS THE PROFILE OF THE GUTTERLINE. FOR RAIL HEIGHT DETAILS AND ASPHALT THICKNESS, SEE THE "VERTICAL CONCRETE BARRIER RAIL SECTION" DETAIL.

FIXED END

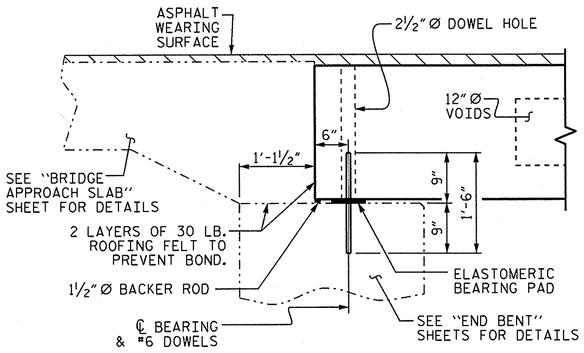

SECTION AT END BENT

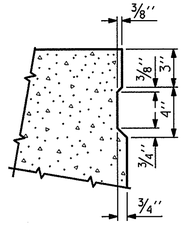

SHEAR KEY DETAIL

NOTE: OMIT SHEAR KEY ON OUTSIDE FACE OF EXERIOR CORED SLABS.

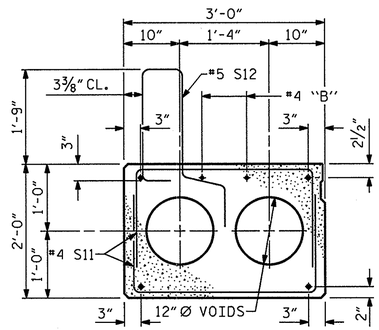

EXTERIOR SLAB SECTION

(FOR PRESTRESSED STRAND LAYOUT, SEE INTERIOR SLAB SECTION.)

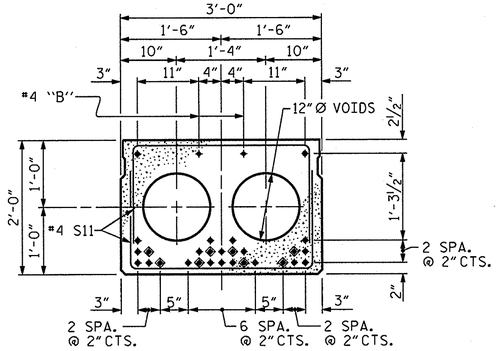

INTERIOR SLAB SECTION (70' UNIT)

(28 STRANDS REQUIRED)

0.6'' Ø LOW RELAXATION STRAND LAYOUT

◈ BOND SHALL BE BROKEN ON THESE STRANDS FOR A DISTANCE OF 12'-0" FROM END OF CORED SLAB UNIT. SEE STANDARD SPECIFICATIONS, ARTICLE 1078-7.

DEBONDING LEGEND

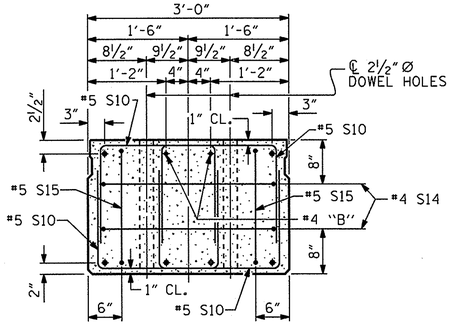

END ELEVATION

SHOWING PLACEMENT OF DOUBLE STIRRUPS AND LOCATION OF DOWEL HOLES. (STRAND LAYOUT NOT SHOWN.) INTERIOR SLAB UNIT SHOWN-EXTERIOR SLAB UNIT SIMILAR EXCEPT SHEAR KEY LOCATION.

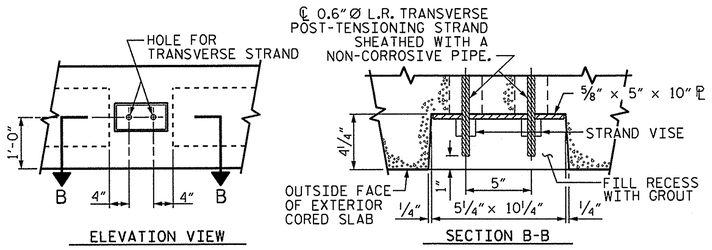

GROUTED RECESS AT END OF POST-TENSIONED STRAND CORED SLABS

PROJECT NO. 17BP.2.R.52

GREENE COUNTY

STATION: 13+40.00 -L-

SHEET 1 OF 3

STATE OF NORTH CAROLINA
DEPARTMENT OF TRANSPORTATION
RALEIGH
STANDARD

3'-0'' X 2'-0'' PRESTRESSED CONCRETE CORED SLAB UNIT

REVISIONS						SHEET NO.
NO.	BY:	DATE:	NO.	BY:	DATE:	S-4
1			3			TOTAL SHEETS
2			4			13

NORTH CAROLINA PROFESSIONAL SEAL 22005 ENGINEER KEITH PASCHAL

10.23.13

ASSEMBLED BY : C.B. PRUETT	DATE : 10/01/13		
CHECKED BY : M.D. PISO	DATE : 10/11/13		
DRAWN BY : MAA 6/10	REV. 12/11	MAA/AAC	
CHECKED BY : MKT 7/10			

25-OCT-2013 07:36
S:\DPG1\Keith\17BP.2.R.52\Final Plans\17BP.2.R.52_SD_CS.dgn
kpaschal

STD. NO. 24PCS4_33_90S

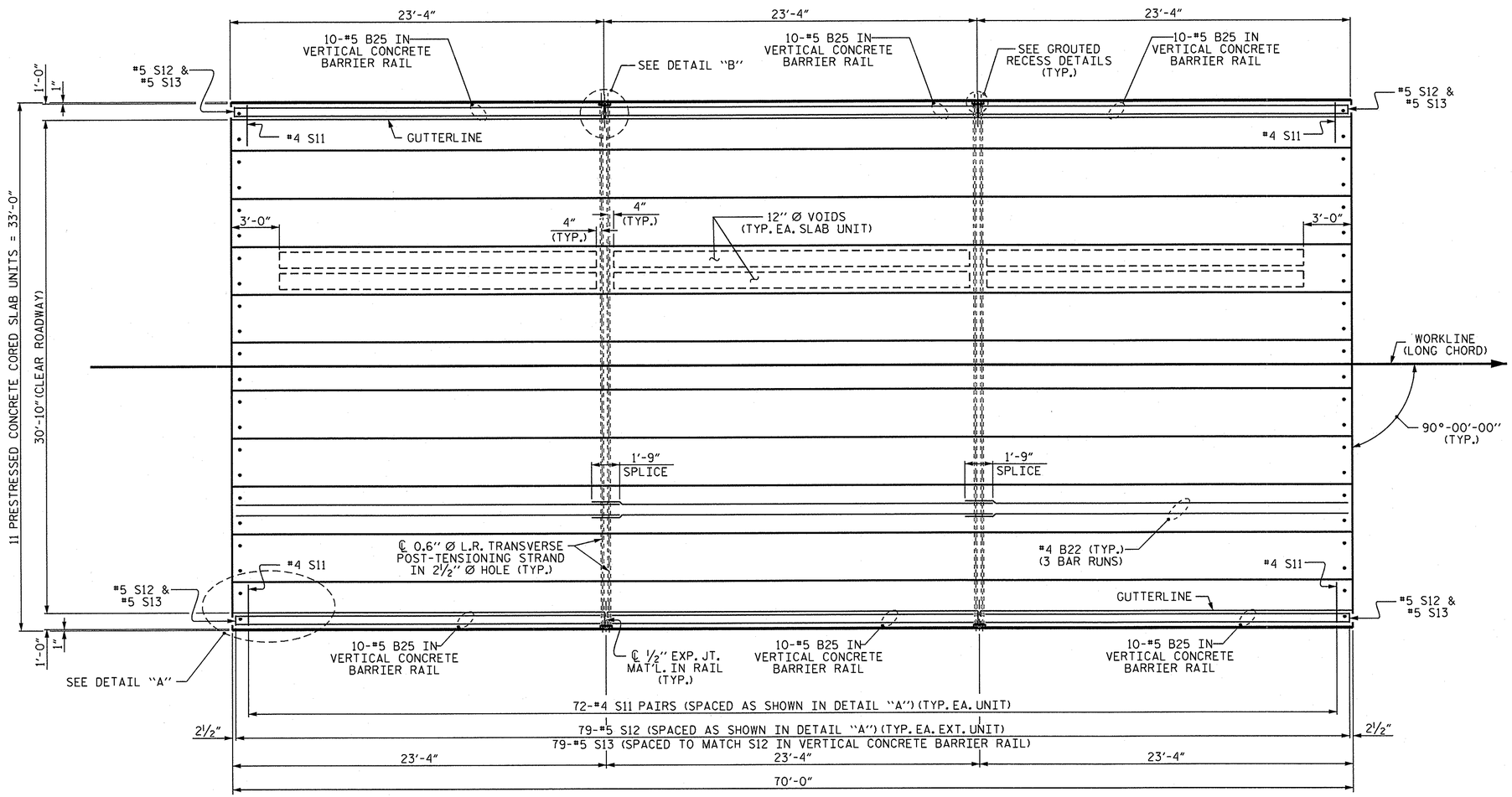

PLAN OF UNIT

DECK DRAINS NOT REQUIRED

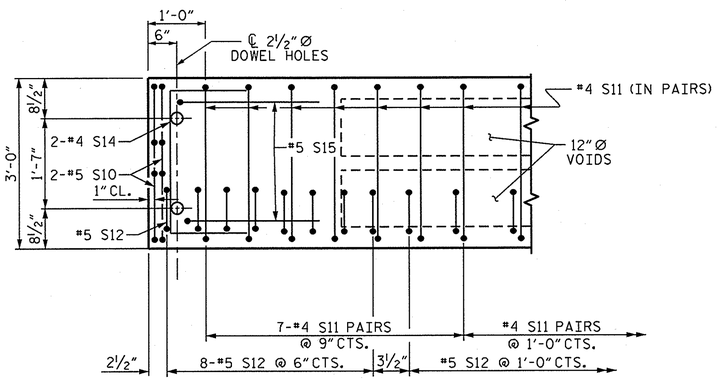

DETAIL "A"

NOTE: EXTERIOR UNIT SHOWN - INTERIOR UNIT SIMILAR EXCEPT OMIT #5 S12 BARS.

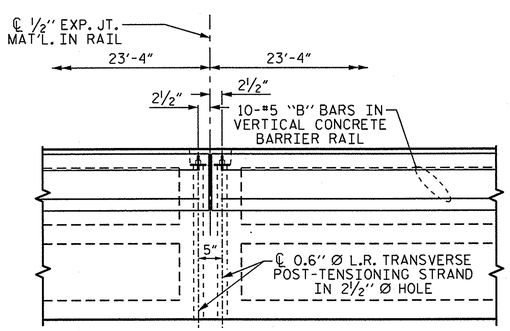

DETAIL "B"

#4 S11 BARS MAY BE SHIFTED AS NECESSARY TO MAINTAIN 1" CLEAR TO GROUTED RECESS AND 2½" Ø TRANSVERSE POST-TENSIONING STRAND HOLES

NORTH CAROLINA PROFESSIONAL SEAL 22005 ENGINEER KEITH PASCHAL
10.25.13

PROJECT NO. 17BP.2.R.52

GREENE COUNTY

STATION: 13+40.00 -L-

SHEET 2 OF 3

STATE OF NORTH CAROLINA
DEPARTMENT OF TRANSPORTATION
RALEIGH

PLAN OF 70' UNIT 30'-10" CLEAR ROADWAY 90° SKEW

REVISIONS						SHEET NO.
NO.	BY:	DATE:	NO.	BY:	DATE:	S-5
1			3			TOTAL SHEETS
2			4			13

ASSEMBLED BY :	C.B. PRUETT	DATE :	10/01/13
CHECKED BY :	M.D. PISO	DATE :	10/11/13
DRAWN BY :	MAA	6/10	
CHECKED BY :	MKT	7/10	
REV. 12/5/11		MAA/AAC	

25-OCT-2013 07:36
S:\DPG1\Keith\17BP.2.R.52\Final Plans\17BP.2.R.52_SD_CS.dgn
kpaschal

STD. NO. 24PCS_33_90S_70L

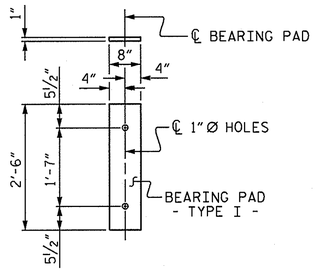

FIXED END
(TYPE I - 22 REQ'D)

BILL OF MATERIAL FOR VERTICAL CONCRETE BARRIER RAIL						
BAR	BARS PER PAIR OF EXTERIOR UNITS 70' UNIT	TOTAL NO.	SIZE	TYPE	LENGTH	WEIGHT
✱B25	60	60	#5	STR	22'-11"	1434
✱S13	158	158	#5	2	7'-2"	1181
✱EPOXY COATED REINFORCING STEEL				LBS.		2615
CLASS AA CONCRETE				CU.YDS.		18.9
TOTAL VERTICAL CONCRETE BARRIER RAIL				LN. FT.		140.25

ELASTOMERIC BEARING DETAILS

ELASTOMER IN ALL BEARINGS SHALL BE 60 DUROMETER HARDNESS.

CORED SLABS REQUIRED			
	NUMBER	LENGTH	TOTAL LENGTH
70' UNIT			
EXTERIOR C.S.	2	70'-0"	140'-0"
INTERIOR C.S.	9	70'-0"	630'-0"
TOTAL	11		770'-0"

DEAD LOAD DEFLECTION AND CAMBER	
	3'-0" x 2'-0"
70' CORED SLAB UNIT	0.6" Ø L.R. STRAND
CAMBER (SLAB ALONE IN PLACE)	4 5/16" ↑
DEFLECTION DUE TO SUPERIMPOSED DEAD LOAD**	13/16" ↓
FINAL CAMBER	3½" ↑

** INCLUDES FUTURE WEARING SURFACE

BAR TYPES

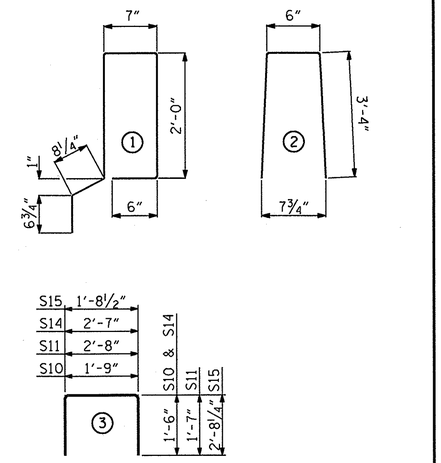

ALL BAR DIMENSIONS ARE OUT TO OUT

NOTES

ALL PRESTRESSING STRANDS SHALL BE 7-WIRE LOW RELAXATION GRADE 270 STRANDS AND SHALL CONFORM TO AASHTO M203 EXCEPT FOR SAMPLING REQUIREMENTS WHICH SHALL BE IN ACCORDANCE WITH THE STANDARD SPECIFICATIONS.

ALL REINFORCING STEEL CAST WITH THE CORED SLAB SECTIONS SHALL BE GRADE 60 AND SHALL BE INCLUDED IN THE UNIT PRICE BID FOR PRESTRESSED CONCRETE CORED SLABS.

RECESSES FOR TRANSVERSE STRANDS SHALL BE GROUTED AFTER THE TENSIONING OF THE STRANDS.

THE 2½" Ø DOWEL HOLES AT FIXED ENDS OF SLAB SECTIONS SHALL BE FILLED WITH NON-SHRINK GROUT.

THE BACKER RODS SHALL CONFORM TO THE REQUIREMENTS OF TYPE M BOND BREAKER. SEE SECTION 1028 OF THE STANDARD SPECIFICATIONS.

WHEN CORED SLABS ARE CAST, AN INTERNAL HOLD-DOWN SYSTEM SHALL BE EMPLOYED TO PREVENT VOIDS FROM RISING OR MOVING SIDEWAYS. AT LEAST SIX WEEKS PRIOR TO CASTING CORED SLABS, THE CONTRACTOR SHALL SUBMIT TO THE ENGINEER FOR REVIEW AND COMMENT, DETAILED DRAWINGS OF THE PROPOSED HOLD-DOWN SYSTEM. IN ADDITION TO STRUCTURAL DETAILS, LOCATION AND SPACING OF THE HOLD-DOWNS SHALL BE INDICATED.

THE TRANSFER OF LOAD FROM THE ANCHORAGES TO THE CORED SLAB UNIT SHALL BE DONE WHEN THE CONCRETE HAS REACHED A COMPRESSIVE STRENGTH OF NOT LESS THAN THE REQUIRED STRENGTH SHOWN IN THE "CONCRETE RELEASE STRENGTH" TABLE.

ALL REINFORCING STEEL IN VERTICAL CONCRETE BARRIER RAILS SHALL BE EPOXY COATED.

PRESTRESSING STRANDS SHALL BE CUT FLUSH WITH THE CORED SLAB UNIT ENDS.

APPLY EPOXY PROTECTIVE COATING TO CORED SLAB UNIT ENDS.

GROOVED CONTRACTION JOINTS, ½" IN DEPTH, SHALL BE TOOLED IN ALL EXPOSED FACES OF THE BARRIER RAIL AND IN ACCORDANCE WITH ARTICLE 825-10(B) OF THE STANDARD SPECIFICATIONS. A CONTRACTION JOINT SHALL BE LOCATED AT EACH THIRD POINT BETWEEN BARRIER RAIL EXPANSION JOINTS. ONLY ONE CONTRACTION JOINT IS REQUIRED AT MIDPOINT OF BARRIER RAIL SEGMENTS LESS THAN 20 FEET IN LENGTH AND NO CONTRACTION JOINTS ARE REQUIRED FOR THOSE SEGMENTS LESS THAN 10 FEET IN LENGTH.

TRANSVERSE POST TENSIONING OF THE CORED SLAB UNITS SHALL BE DONE IN ACCORDANCE WITH THE STANDARD SPECIFICATIONS.

MAINTAIN A SYMMETRIC TENSION FORCE BETWEEN EACH PAIR OF TRANSVERSE POST TENSIONING STRANDS IN THE DIAPHRAGM.

THE #4 S11 STIRRUPS MAY BE SHIFTED AS NECESSARY TO MAINTAIN 1" CLEAR TO THE GROUTED RECESS.

FOR GROUT FOR STRUCTURES, SEE SPECIAL PROVISIONS.

BILL OF MATERIAL FOR ONE 70' CORED SLAB UNIT							
				EXTERIOR UNIT		INTERIOR UNIT	
BAR	NUMBER	SIZE	TYPE	LENGTH	WEIGHT	LENGTH	WEIGHT
B22	6	#4	STR	24'-6"	98	24'-6"	98
S10	8	#5	3	4'-9"	40	4'-9"	40
S11	144	#4	3	5'-10"	561	5'-10"	561
✱S12	79	#5	1	6'-4"	522		
S14	4	#4	3	5'-7"	15	5'-7"	15
S15	4	#5	3	7'-1"	30	7'-1"	30
REINFORCING STEEL			LBS.		744		744
✱EPOXY COATED REINFORCING STEEL			LBS.		522		
7000 P.S.I. CONCRETE			CU. YDS.		11.8		11.8
0.6" Ø L.R. STRANDS			No.		28		28

GUTTERLINE ASPHALT THICKNESS & RAIL HEIGHT		
	ASPHALT OVERLAY THICKNESS @ MID-SPAN	RAIL HEIGHT @ MID-SPAN
70' UNITS	1¾"	3'-8"

CONCRETE RELEASE STRENGTH	
UNIT	PSI
70' UNIT	5500

GRADE 270 STRANDS	
	0.6" Ø L.R.
AREA (SQUARE INCHES)	0.217
ULTIMATE STRENGTH (LBS. PER STRAND)	58,600
APPLIED PRESTRESS (LBS. PER STRAND)	43,950

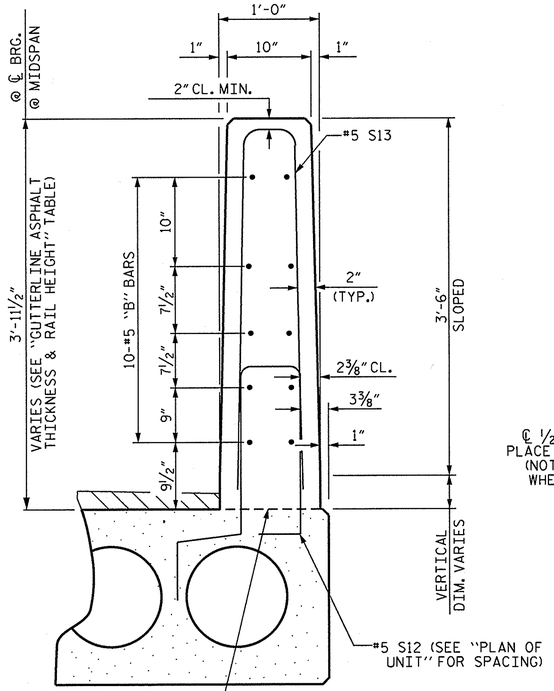

SECTION THRU RAIL

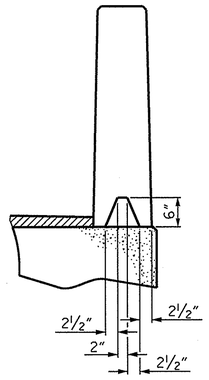

SECTION S-S
AT DAM IN OPEN JOINT
(THIS IS TO BE USED ONLY WHEN SLIP FORM IS USED)

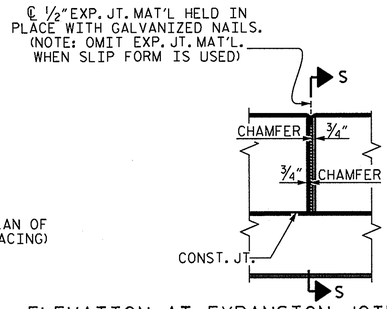

ELEVATION AT EXPANSION JOINTS

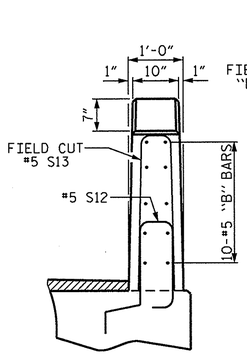

END VIEW

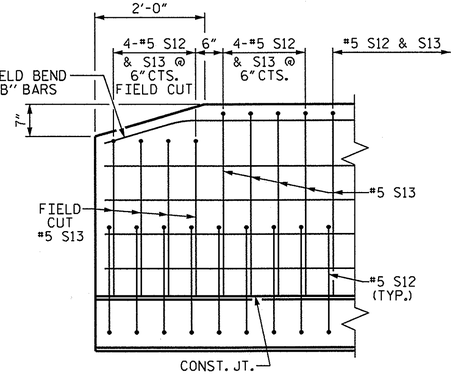

SIDE VIEW

VERTICAL CONCRETE BARRIER RAIL DETAILS

END OF RAIL DETAILS

PROJECT NO. 17BP.2.R.52
GREENE COUNTY
STATION: 13+40.00 -L-
SHEET 3 OF 3

STATE OF NORTH CAROLINA
DEPARTMENT OF TRANSPORTATION
RALEIGH

STANDARD
3'-0" X 2'-0"
PRESTRESSED CONCRETE
CORED SLAB UNIT

NORTH CAROLINA PROFESSIONAL SEAL 29905 ENGINEER KEITH PASCHAL
10-25-13

ASSEMBLED BY : C.B. PRUETT	DATE : 10/01/13
CHECKED BY : M.D. PISO	DATE : 10/11/13
DRAWN BY : MAA 6/10	REV. 12/11 MAA/AAC
CHECKED BY : MKT 7/10	

REVISIONS						SHEET NO.
NO.	BY:	DATE:	NO.	BY:	DATE:	S-6
1			3			TOTAL SHEETS
2			4			13

25-OCT-2013 07:36
S:\DPGI\Keith\17BP.2.R.52\Final Plans\17BP.2.R.52_SD_CS.dgn
kpaschal

STD. NO. 24PCS3_33_90S

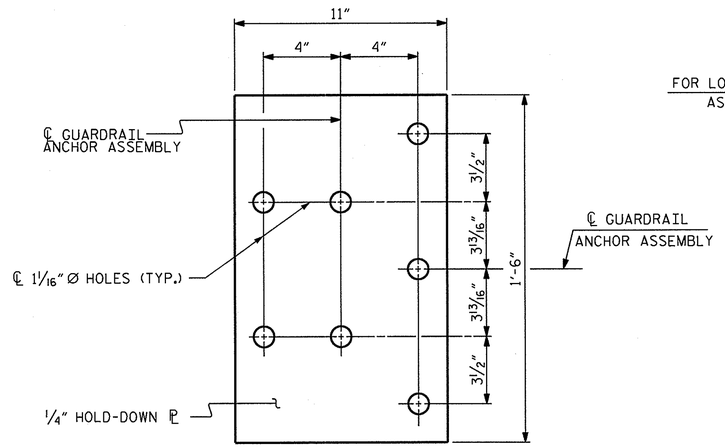

PLAN

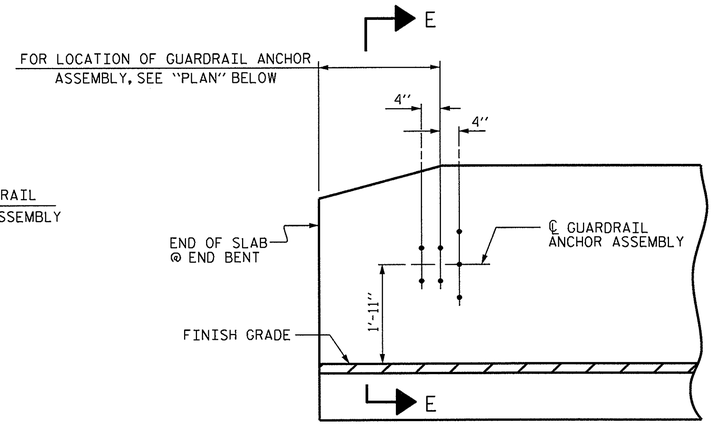

ELEVATION

NOTES

THE GUARDRAIL ANCHOR ASSEMBLY SHALL CONSIST OF A 1/4" HOLD DOWN PLATE AND 7 - 7/8" Ø BOLTS WITH NUTS AND WASHERS.

THE HOLD-DOWN PLATE SHALL CONFORM TO AASHTO M270 GRADE 36. AFTER FABRICATION, THE HOLD-DOWN PLATE SHALL BE HOT-DIP GALVANIZED IN ACCORDANCE WITH AASHTO M111.

BOLTS SHALL CONFORM TO THE REQUIREMENTS OF ASTM A307 AND NUTS SHALL CONFORM TO THE REQUIREMENTS OF AASHTO M291. BOLTS, NUTS AND WASHERS SHALL BE GALVANIZED. (AT THE CONTRACTOR'S OPTION, STAINLESS STEEL BOLTS, NUTS AND WASHERS MAY BE USED AS AN ALTERNATE FOR THE 7/8" Ø GALVANIZED BOLTS, NUTS AND WASHERS. THEY SHALL CONFORM TO OR EXCEED THE MECHANICAL REQUIREMENTS OF ASTM A307. THE USE OF THIS ALTERNATE SHALL BE APPROVED BY THE ENGINEER.)

THE GUARDRAIL ANCHOR ASSEMBLY IS REQUIRED AT ALL POINTS WHERE APPROACH GUARDRAIL IS TO BE ATTACHED TO THE END OF BARRIER RAIL. FOR POINTS OF ATTACHMENT, SEE SKETCH.

AFTER INSTALLATION, THE EXPOSED THREAD OF THE BOLT SHALL BE BURRED WITH A SHARP POINTED TOOL.

THE COST OF THE GUARDRAIL ANCHOR ASSEMBLY SHALL BE INCLUDED IN THE UNIT CONTRACT PRICE BID FOR VERTICAL CONCRETE BARRIER RAIL.

THE VERTICAL REINFORCING BARS MAY BE SHIFTED SLIGHTLY IN THE VERTICAL CONCRETE BARRIER RAIL TO CLEAR ASSEMBLY BOLTS.

THE 1 1/4" Ø HOLES SHALL BE FORMED OR DRILLED WITH A CORE BIT. IMPACT TOOLS WILL NOT BE PERMITTED. ANY CONCRETE DAMAGED BY THIS WORK SHALL BE REPAIRED TO THE SATISFACTION OF THE ENGINEER.

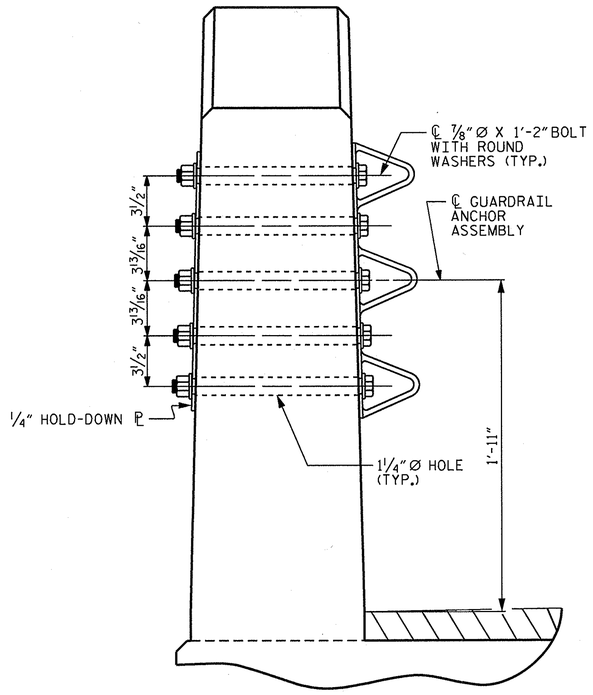

SECTION E-E

GUARDRAIL ANCHOR ASSEMBLY DETAILS

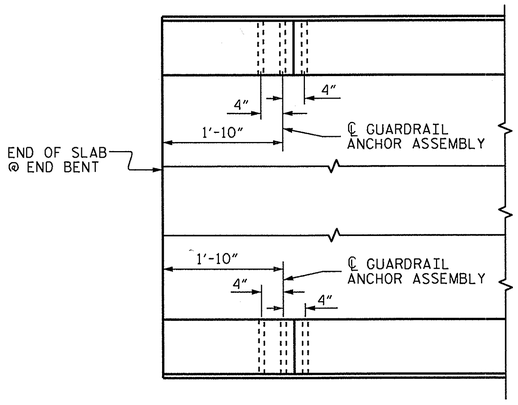

PLAN

LOCATION OF ANCHORS FOR GUARDRAIL

END BENT 1 SHOWN, END BENT 2 SIMILAR.

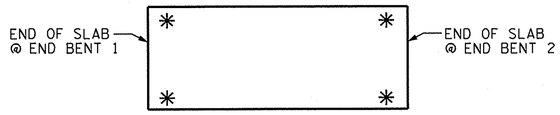

SKETCH SHOWING POINTS OF ATTACHMENT

✳ DENOTES GUARDRAIL ANCHOR ASSEMBLY

PROJECT NO. 17BP.2.R.52

GREENE COUNTY

STATION: 13+40.00 -L-

STATE OF NORTH CAROLINA
DEPARTMENT OF TRANSPORTATION
RALEIGH

STANDARD
GUARDRAIL ANCHORAGE FOR VERTICAL CONCRETE BARRIER RAIL

NORTH CAROLINA PROFESSIONAL SEAL 22005 ENGINEER KEITH PASCHAL
10-25-13

REVISIONS						SHEET NO.
NO.	BY:	DATE:	NO.	BY:	DATE:	S-7
1			3			TOTAL SHEETS
2			4			13

ASSEMBLED BY : C.B. PRUETT DATE : 10/01/13
CHECKED BY : M.D. PISO DATE : 10/11/13

DRAWN BY : MAA 5/10
CHECKED BY : GM 5/10

REV. 10/1/11 MAA/GM
REV. 12/5/11 MAA/GM
REV. 6/13 MAA/GM

25-OCT-2013 07:36
S:\DPG1\Keith\17BP.2.R.52\Final Plans\17BP.2.R.52_SD_CS.dgn
kpaschal

(SHT 1) STD. NO. GRA3

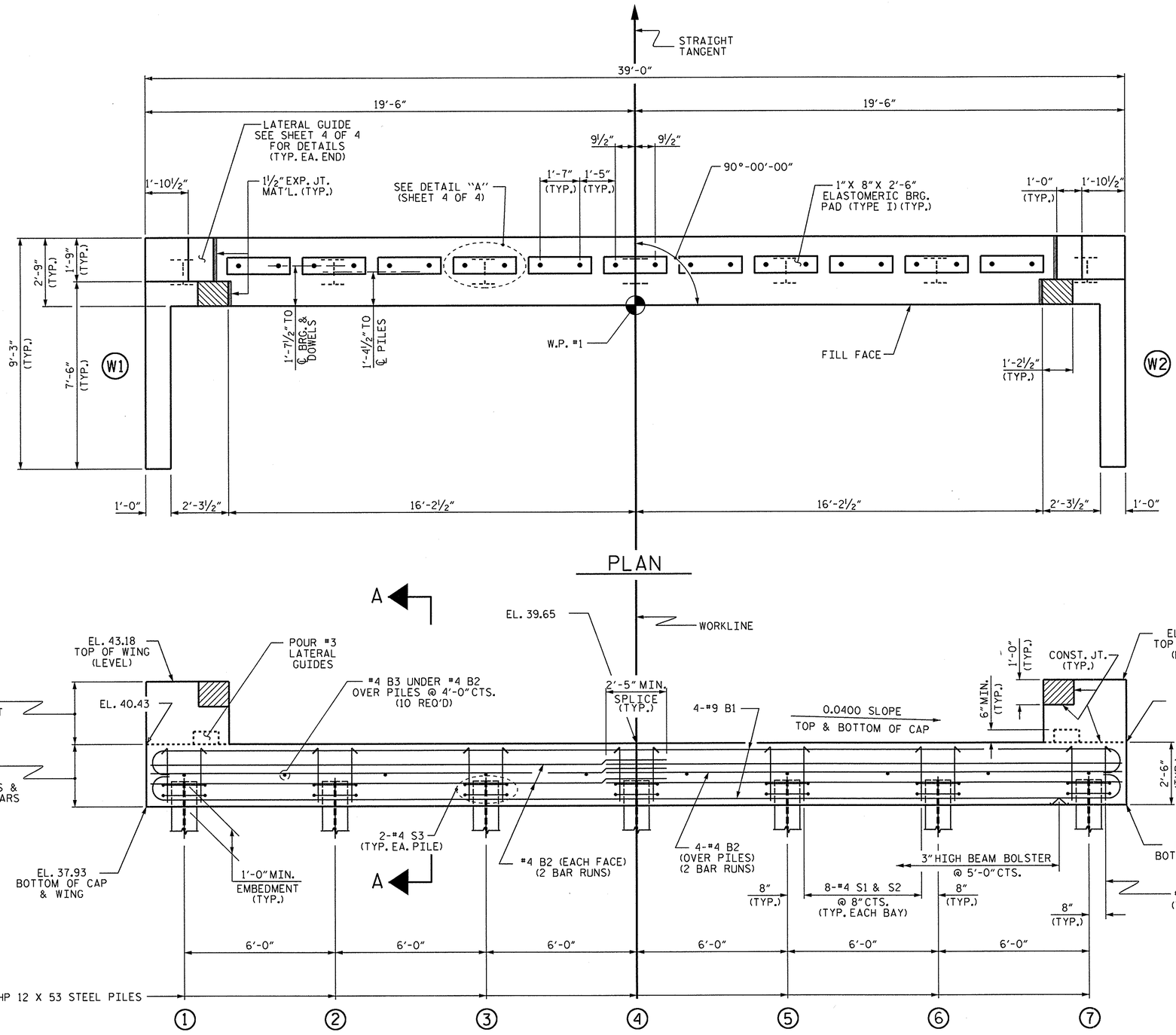

PLAN

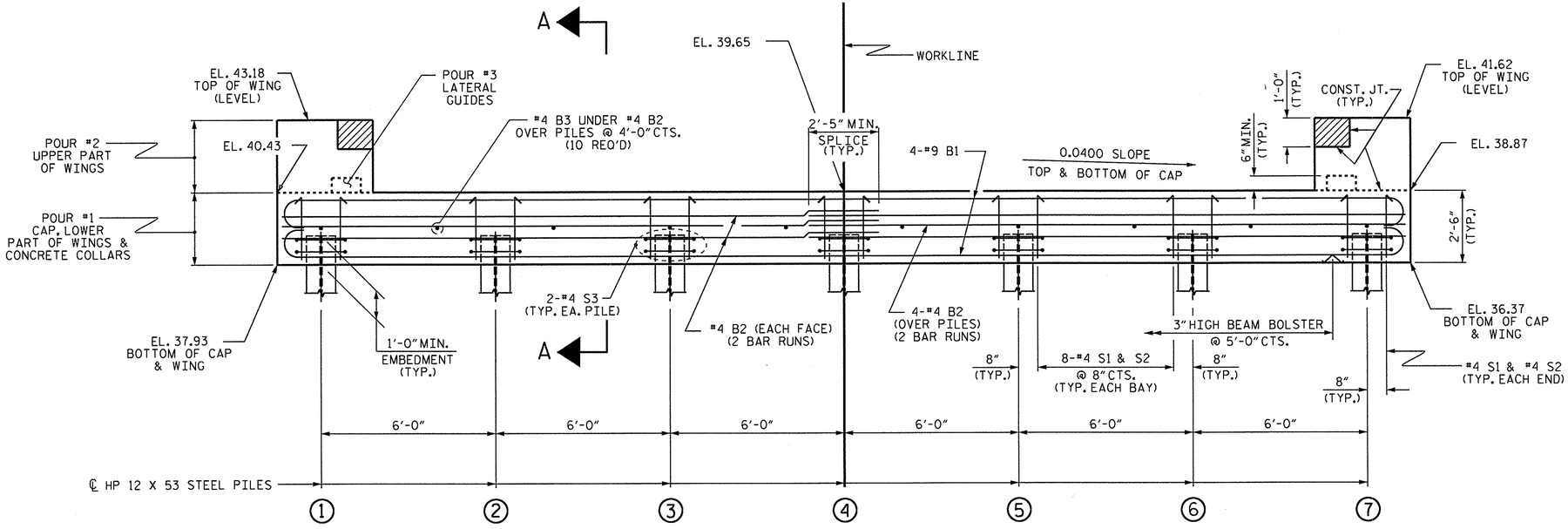

ELEVATION

WINGS NOT SHOWN FOR CLARITY.
FOR SECTION A-A, SEE SHEET 4 OF 4.
CONCRETE COLLARS FOR STEEL PILES NOT SHOWN IN PLAN AND ELEVATION VIEWS FOR CLARITY.
SEE "CORROSION PROTECTION FOR STEEL PILES DETAIL", SHEET 4 OF 4.

NOTES

STIRRUPS IN CAP MAY BE SHIFTED AS NECESSARY TO CLEAR DOWELS.

THE LATERAL GUIDES ARE NOT TO BE POURED UNTIL AFTER THE CORED SLAB UNITS ARE IN PLACE.

THE CONCRETE IN THE SHADED AREA OF THE WING SHALL BE POURED AFTER THE VERTICAL CONCRETE BARRIER RAIL IS CAST IF SLIP FORMING IS USED.

FOR PILE SPLICE DETAILS, SEE SHEET 4 OF 4.

FOR WING DETAILS, SEE SHEET 3 OF 4.

THE CONTRACTOR HAS THE OPTION TO OMIT THE LATERAL GUIDE IF APPROVED BY THE ENGINEER.

INSTALL THE 4"Ø DRAIN PIPE THROUGH THE WING WALL AS REQUIRED. FOR REINFORCED BRIDGE APPROACH FILLS, SEE ROADWAY PLANS. REINFORCING STEEL IN THE WING WALL MAY BE SHIFTED AS NECESSARY TO CLEAR THE DRAIN PIPE.

TOP OF PILE ELEVATIONS	
①	38.89
②	38.65
③	38.41
④	38.17
⑤	37.93
⑥	37.69
⑦	37.45

PROJECT NO. 17BP.2.R.52
GREENE COUNTY
STATION: 13+40.00 -L-

SHEET 1 OF 4

STATE OF NORTH CAROLINA
DEPARTMENT OF TRANSPORTATION
RALEIGH

SUBSTRUCTURE

END BENT No. 1

REVISIONS						SHEET NO.
NO.	BY:	DATE:	NO.	BY:	DATE:	S-8
1			3			TOTAL SHEETS
2			4			13

ASSEMBLED BY :	C.B. PRUETT	DATE : 10/01/13
CHECKED BY :	M.D. PISO	DATE : 10/11/13
DRAWN BY :	DGE 02/10	
CHECKED BY :	MKT 02/10	

NORTH CAROLINA PROFESSIONAL SEAL 22006 ENGINEER KEITH PASCHAL
10-25-13

25-OCT-2013 07:36
S:\DPG1\Kpasch\17BP.2.R.52\Final Plans\17BP.2.R.52_SD_CS.dgn
kpaschal

STD. NO. EB_33_90S

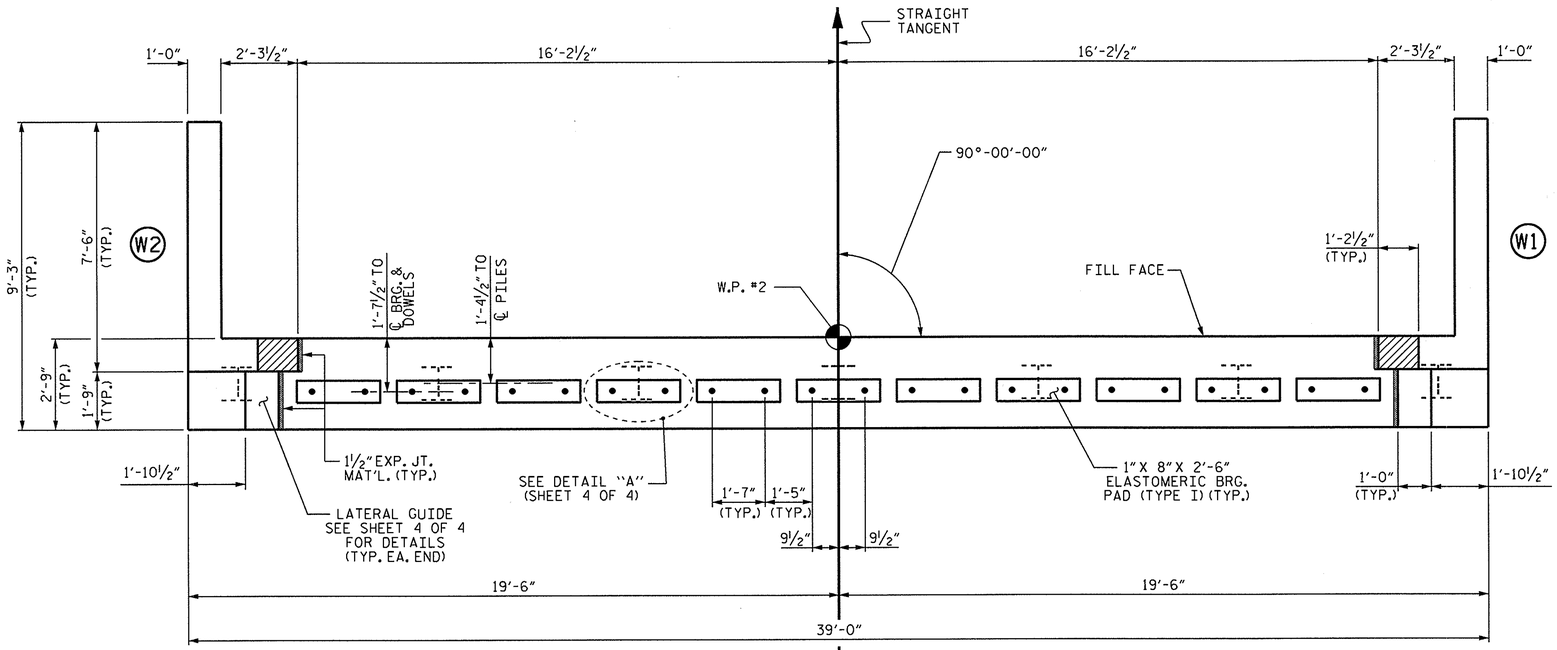

PLAN

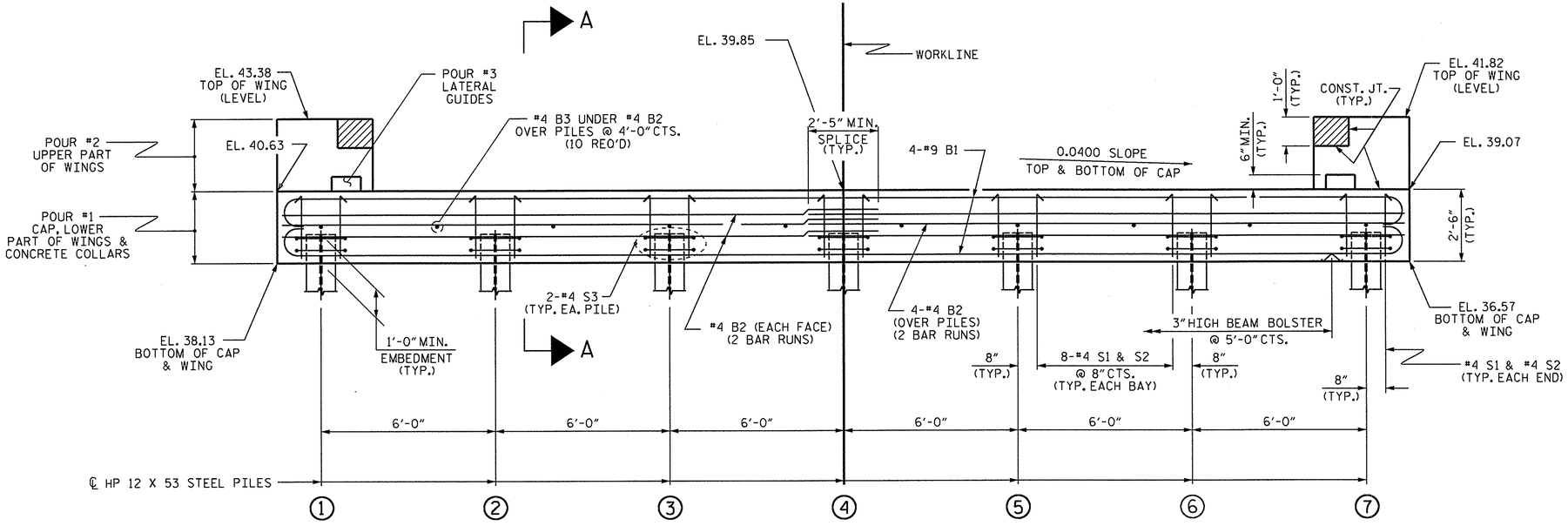

ELEVATION

WINGS NOT SHOWN FOR CLARITY.
FOR SECTION A-A, SEE SHEET 4 OF 4.
CONCRETE COLLARS FOR STEEL PILES NOT SHOWN IN PLAN AND ELEVATION VIEWS FOR CLARITY.
SEE "CORROSION PROTECTION FOR STEEL PILES DETAIL", SHEET 4 OF 4.

NOTES

STIRRUPS IN CAP MAY BE SHIFTED AS NECESSARY TO CLEAR DOWELS.

THE LATERAL GUIDES ARE NOT TO BE POURED UNTIL AFTER THE CORED SLAB UNITS ARE IN PLACE.

THE CONCRETE IN THE SHADED AREA OF THE WING SHALL BE POURED AFTER THE VERTICAL CONCRETE BARRIER RAIL IS CAST IF SLIP FORMING IS USED.

FOR PILE SPLICE DETAILS, SEE SHEET 4 OF 4.

FOR WING DETAILS, SEE SHEET 3 OF 4.

THE CONTRACTOR HAS THE OPTION TO OMIT THE LATERAL GUIDE IF APPROVED BY THE ENGINEER.

INSTALL THE 4" Ø DRAIN PIPE THROUGH THE WING WALL AS REQUIRED. FOR REINFORCED BRIDGE APPROACH FILLS, SEE ROADWAY PLANS. REINFORCING STEEL IN THE WING WALL MAY BE SHIFTED AS NECESSARY TO CLEAR THE DRAIN PIPE.

TOP OF PILE ELEVATIONS	
①	39.09
②	38.85
③	38.61
④	38.37
⑤	38.13
⑥	37.89
⑦	37.65

PROJECT NO. 17BP.2.R.52
GREENE COUNTY
STATION: 13+40.00 -L-

SHEET 2 OF 4

STATE OF NORTH CAROLINA
DEPARTMENT OF TRANSPORTATION
RALEIGH

SUBSTRUCTURE

END BENT No. 2

REVISIONS						SHEET NO.
NO.	BY:	DATE:	NO.	BY:	DATE:	S-9
1			3			TOTAL SHEETS
2			4			13

NORTH CAROLINA PROFESSIONAL SEAL 22005 ENGINEER KEITH PASCHAL
10-25-13

ASSEMBLED BY :	C.B. PRUETT	DATE : 10/01/13
CHECKED BY :	M.D. PISO	DATE : 10/11/13
DRAWN BY :	DGE	02/10
CHECKED BY :	MKT	02/10

25-OCT-2013 07:36
S:\DPG\Keith\17BP.2.R.52\Final Plans\17BP.2.R.52_SD_CS.dgn
kpaschal

STD. NO. EB_33_90S

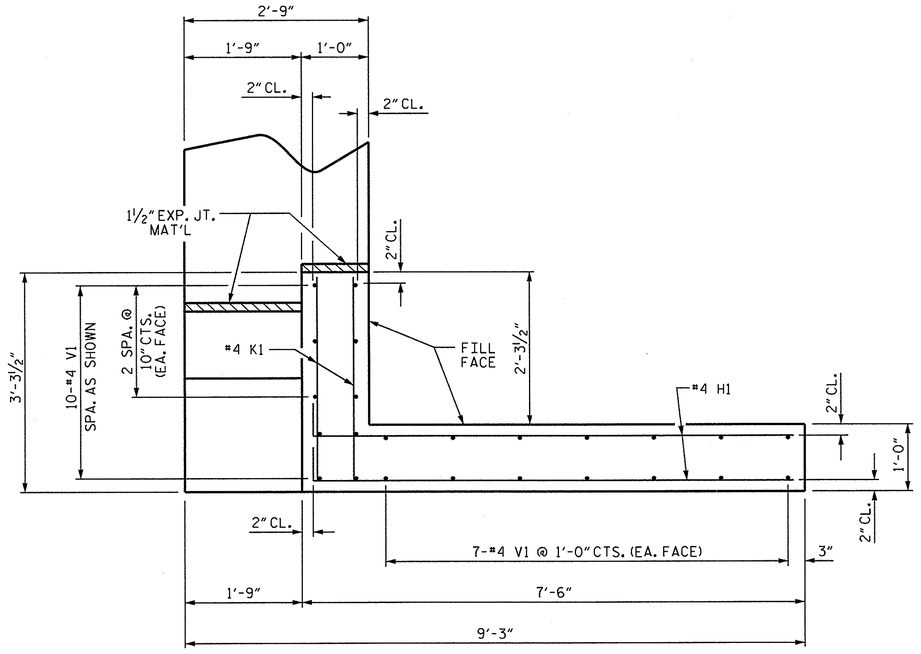

PLAN OF WING (W1)

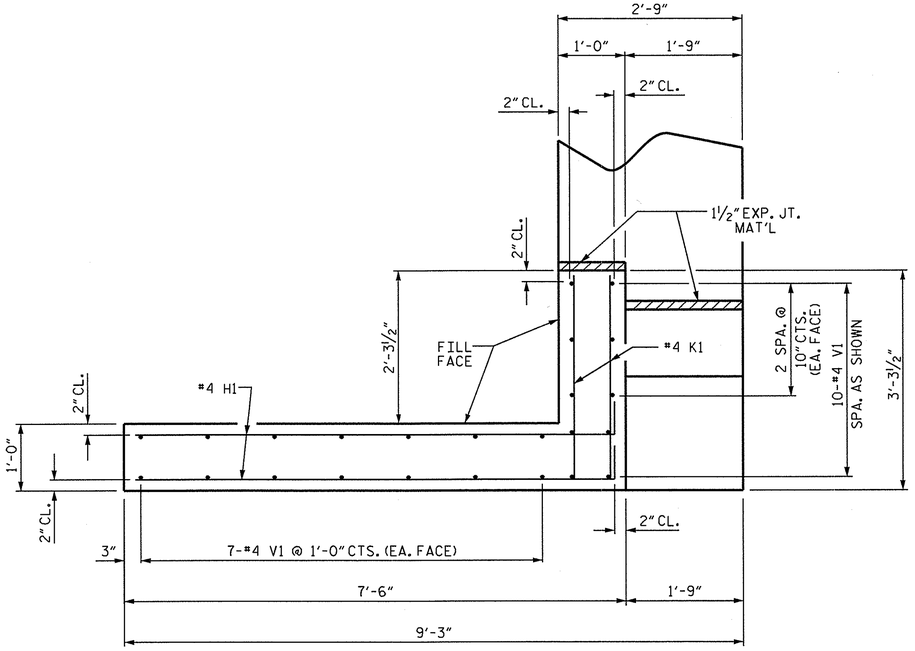

PLAN OF WING (W2)

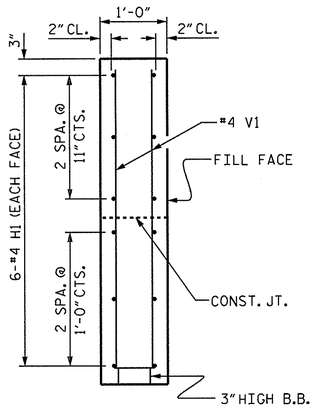

SECTION X-X

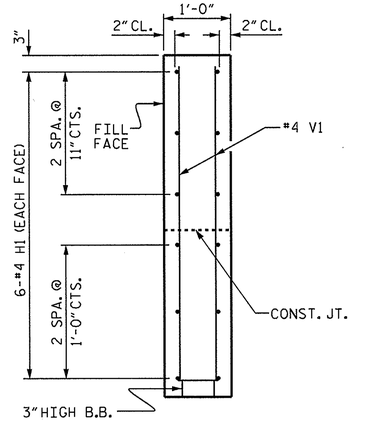

SECTION Y-Y

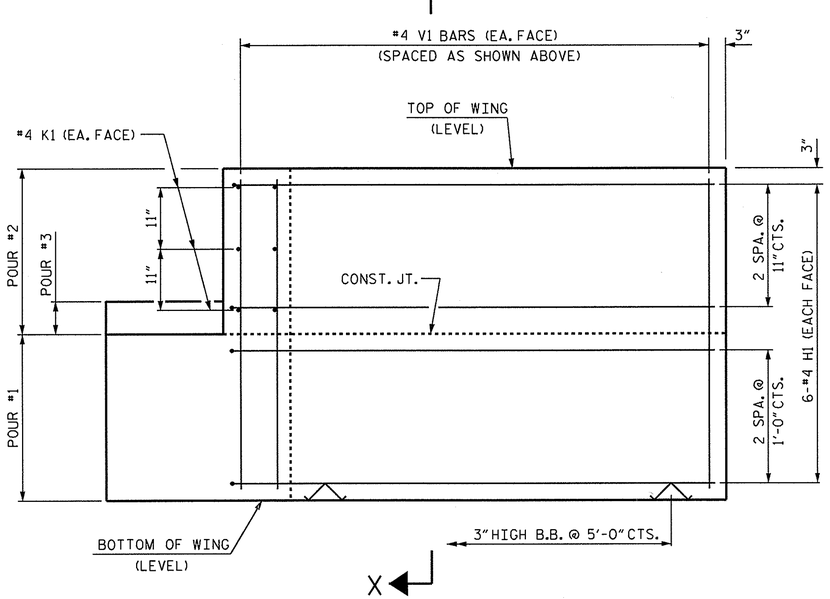

ELEVATION OF WING (W1)

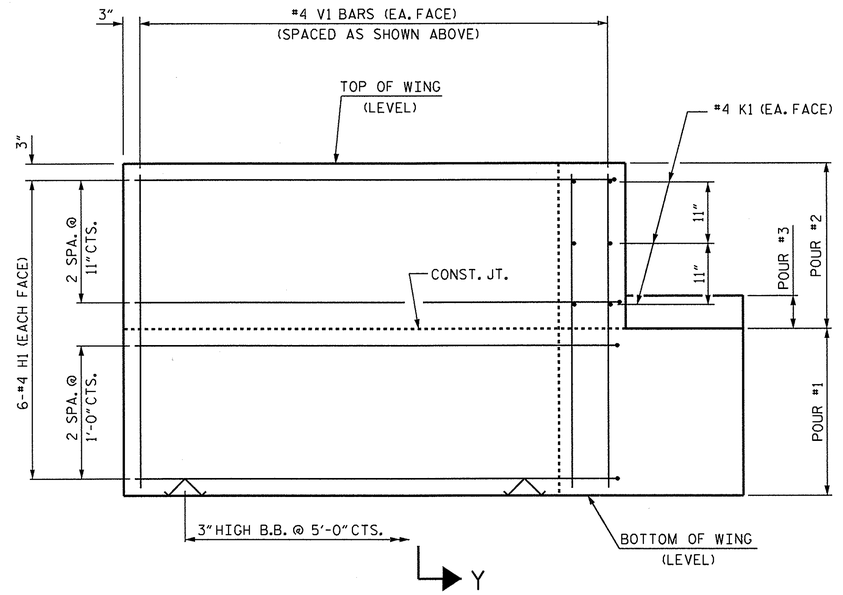

ELEVATION OF WING (W2)

WING DETAILS

ASSEMBLED BY :	C.B. PRUETT	DATE :	10/01/13
CHECKED BY :	M.D. PISO	DATE :	10/11/13
DRAWN BY :	DGE 02/10		
CHECKED BY :	MKT 02/10		

25-OCT-2013 07:36
S:\DPGI\Keith\17BP.2.R.52\Final Plans\17BP.2.R.52_SD_CS.dgn
kpaschal

PROJECT NO. 17BP.2.R.52

GREENE COUNTY

STATION: 13+40.00 -L-

SHEET 3 OF 4

STATE OF NORTH CAROLINA
DEPARTMENT OF TRANSPORTATION
RALEIGH

SUBSTRUCTURE

END BENT
WING DETAILS

REVISIONS						SHEET NO.
NO.	BY:	DATE:	NO.	BY:	DATE:	S-10
1			3			TOTAL SHEETS
2			4			13

NORTH CAROLINA PROFESSIONAL SEAL 26025 ENGINEER KEITH PASCHAL
10-25-13

STD. NO. EB_33_90S

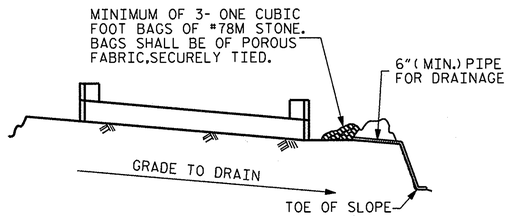

BAGGED STONE AND PIPE SHALL BE PLACED IMMEDIATELY AFTER COMPLETION OF END BENT EXCAVATION. PIPE MAY BE EITHER CONCRETE, CORRUGATED STEEL, CORRUGATED ALUMINUM ALLOY, OR CORRUGATED PLASTIC. PERFORATED PIPE WILL NOT BE ALLOWED.

BAGGED STONE SHALL REMAIN IN PLACE UNTIL THE ENGINEER DIRECTS THAT IT BE REMOVED. THE CONTRACTOR SHALL REMOVE AND DISPOSE OF SILT ACCUMULATIONS AT BAGGED STONE WHEN SO DIRECTED BY THE ENGINEER. BAGS SHALL BE REMOVED AND REPLACED WHENEVER THE ENGINEER DETERMINES THAT THEY HAVE DETERIORATED AND LOST THEIR EFFECTIVENESS.

NO SEPARATE PAYMENT WILL BE MADE FOR THIS WORK AND THE ENTIRE COST OF THIS WORK SHALL BE INCLUDED IN THE UNIT CONTRACT PRICE BID FOR THE SEVERAL PAY ITEMS.

TEMPORARY DRAINAGE AT END BENT

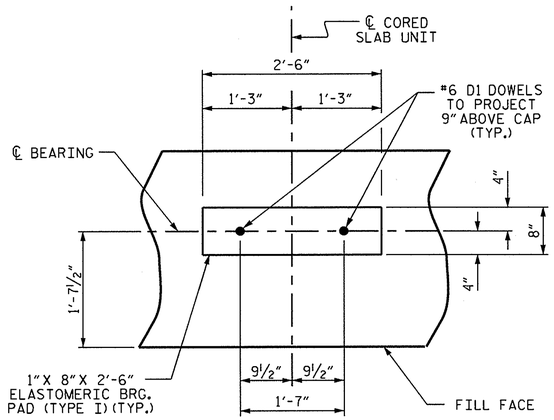

DETAIL "A"

(END BENT No. 1 SHOWN, END BENT No. 2 SIMILAR BY ROTATION)

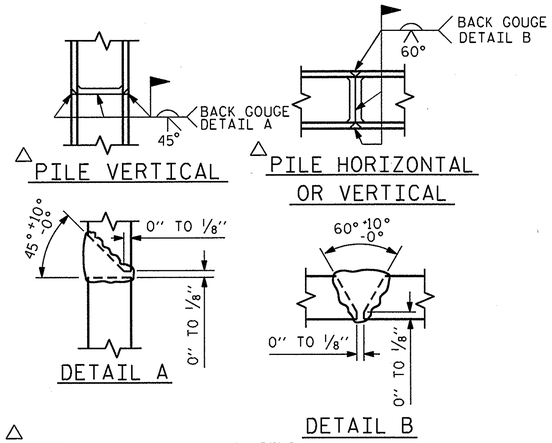

△ POSITION OF PILE DURING WELDING.

PILE SPLICE DETAILS

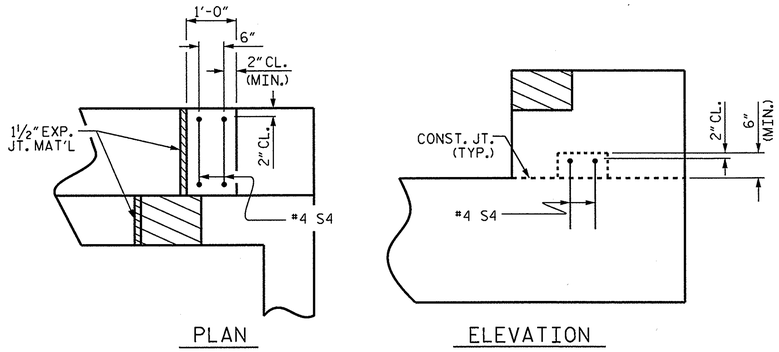

PLAN ELEVATION

LATERAL GUIDE DETAILS

(RIGHT LATERAL GUIDE SHOWN, LEFT END SIMILAR)

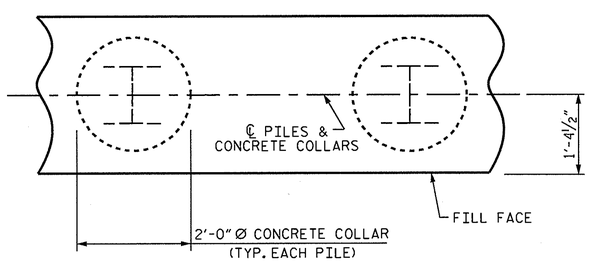

PLAN

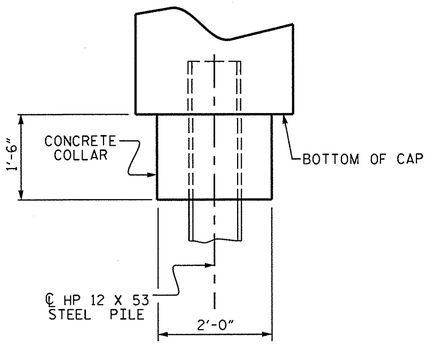

ELEVATION

CORROSION PROTECTION FOR STEEL PILES DETAIL

(END BENT No. 1 SHOWN, END BENT No. 2 SIMILAR BY ROTATION)

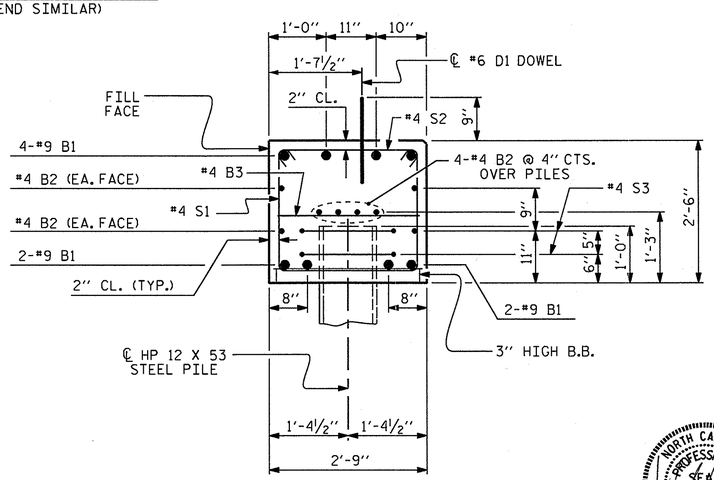

SECTION A-A

(CONCRETE COLLAR NOT SHOWN FOR CLARITY. SEE "CORROSION PROTECTION FOR STEEL PILES DETAIL.")

BAR TYPES

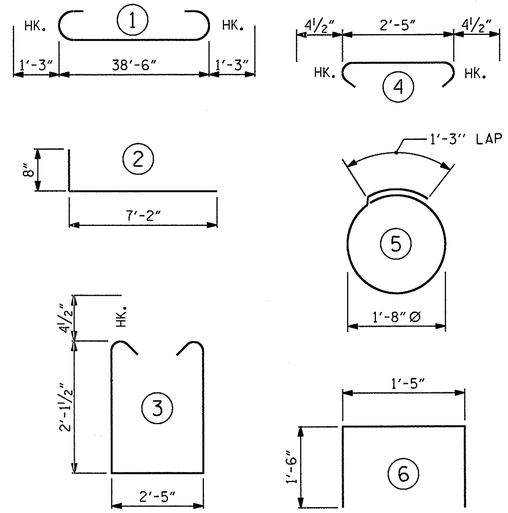

ALL BAR DIMENSIONS ARE OUT TO OUT.

END BENT No. 1		END BENT No. 2	
HP 12 X 53 STEEL PILES		HP 12 X 53 STEEL PILES	
NO: 7	LIN. FT.= 350	NO: 7	LIN. FT.= 315
PILE REDRIVES	EA. 4	PILE REDRIVES	EA. 4
STEEL PILE POINTS	EA. 7	STEEL PILE POINTS	EA. 7

BILL OF MATERIAL

FOR ONE END BENT

BAR	NO.	SIZE	TYPE	LENGTH	WEIGHT
B1	8	#9	1	41'-0"	1115
B2	16	#4	STR	20'-7"	220
B3	10	#4	STR	2'-5"	16
D1	22	#6	STR	1'-6"	50
H1	24	#4	2	7'-10"	126
K1	12	#4	STR	2'-11"	23
S1	50	#4	3	7'-5"	248
S2	50	#4	4	3'-2"	106
S3	14	#4	5	6'-6"	61
S4	4	#4	6	4'-5"	12
V1	48	#4	STR	4'-8"	150

REINFORCING STEEL (FOR ONE END BENT) 2127 LBS.

CLASS A CONCRETE BREAKDOWN (FOR ONE END BENT)

POUR #1	CAP, LOWER PART OF WINGS & COLLARS	12.4 C.Y.
POUR #2	UPPER PART OF WINGS	2.0 C.Y.
POUR #3	LATERAL GUIDES	0.1 C.Y.
TOTAL CLASS A CONCRETE		14.5 C.Y.

PROJECT NO. 17BP.2.R.52

GREENE COUNTY

STATION: 13+40.00 -L-

SHEET 4 OF 4

STATE OF NORTH CAROLINA
DEPARTMENT OF TRANSPORTATION
RALEIGH

SUBSTRUCTURE

END BENT No. 1 & 2 DETAILS

REVISIONS						SHEET NO.
NO.	BY:	DATE:	NO.	BY:	DATE:	S-11
1			3			TOTAL SHEETS
2			4			13

NORTH CAROLINA PROFESSIONAL SEAL 22005 ENGINEER KEITH PASCHAL

10-25-13

ASSEMBLED BY :	C.B. PRUETT	DATE : 10/01/13
CHECKED BY :	M.D. PISO	DATE : 10/11/13
DRAWN BY :	DGE 02/10	
CHECKED BY :	MKT 02/10	

25-OCT-2013 07:35
S:\DPG\Keith\17BP.2.R.52\Final Plans\17BP.2.R.52_SD_CS.dgn
kpaschal

STD. NO. EB_33_90S

NOTES :

FOR BERM WIDTH DIMENSIONS, SEE GENERAL DRAWING.

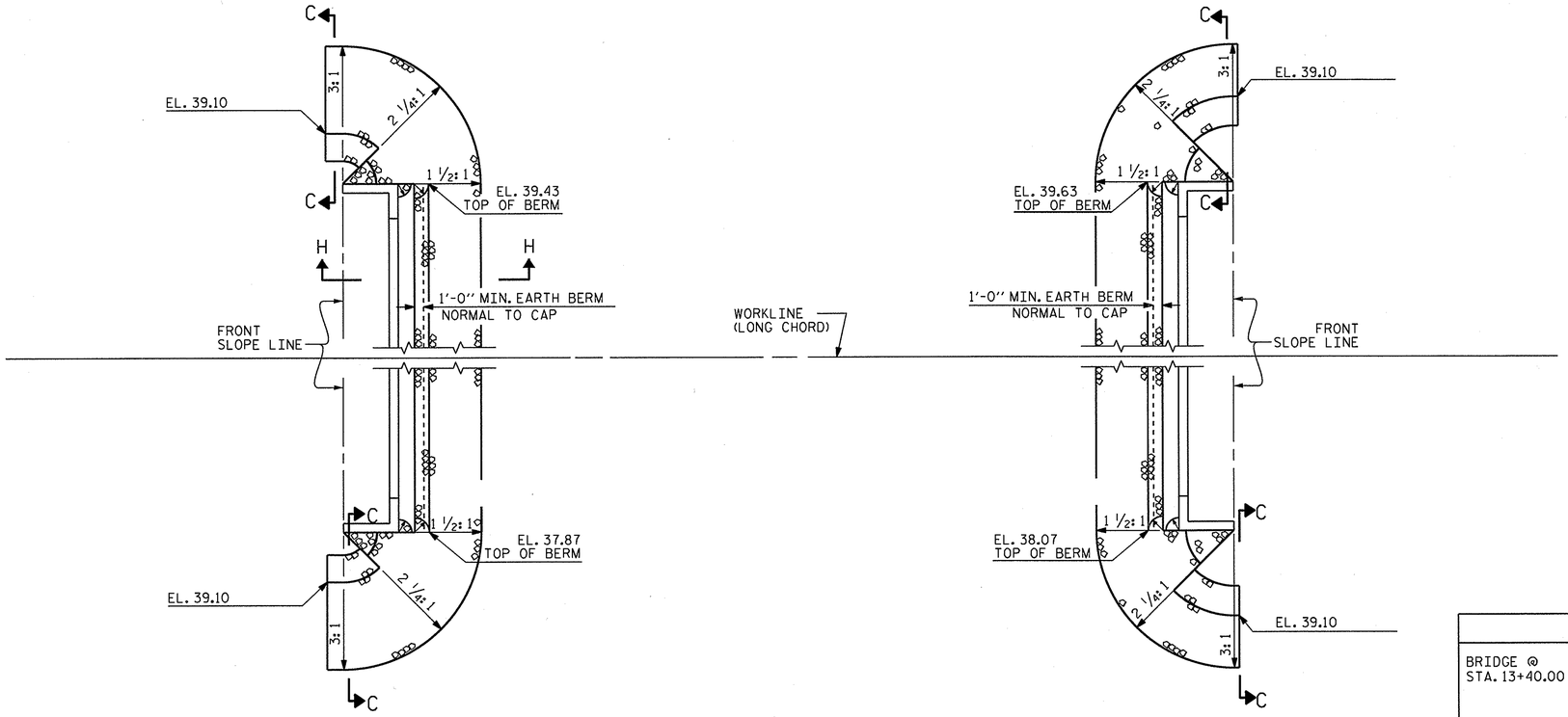

END BENT 1

END BENT 2

ESTIMATED QUANTITIES		
BRIDGE @ STA. 13+40.00 -L-	RIP RAP CLASS II (2'-0" THICK)	GEOTEXTILE FOR DRAINAGE
	TONS	SQUARE YARDS
END BENT 1	120	134
END BENT 2	119	132

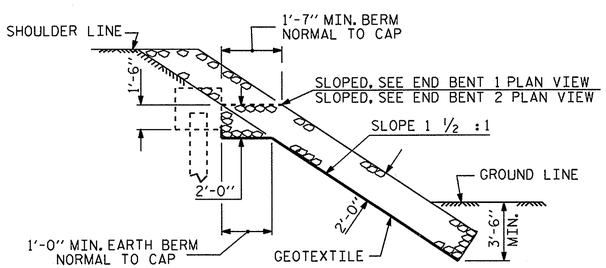

SECTION H-H

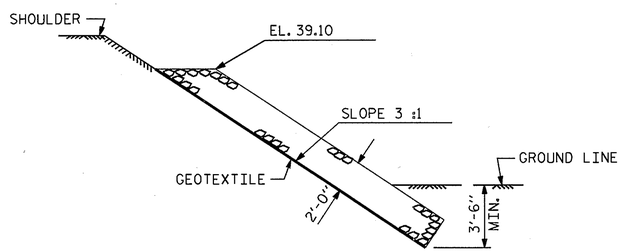

SECTION C-C

PROJECT NO. 17BP.2.R.52

GREENE COUNTY

STATION: 13+40.00 -L-

STATE OF NORTH CAROLINA
DEPARTMENT OF TRANSPORTATION
RALEIGH

STANDARD

RIP RAP DETAILS

NORTH CAROLINA PROFESSIONAL SEAL 22005 ENGINEER KEITH PASCHAL

10-25-13

REVISIONS						SHEET NO.
NO.	BY:	DATE:	NO.	BY:	DATE:	S-12
1			3			TOTAL SHEETS
2			4			13

ASSEMBLED BY : C. B. PRUETT	DATE : 10/01/13	
CHECKED BY : M.D. PISO	DATE : 10/11/13	
DRAWN BY : REK 1/84	REV. 5/1/06R	TLA/GM
CHECKED BY : RDU 1/84	REV. 10/1/11	MAA/GM
	REV. 12/21/11	MAA/GM

25-OCT-2013 08:34
S:\DPG1\Keith\17BP.2.R.52\FinalPlans\17BP.2.R.52_SD_CS.dgn
kpaschal

STD. NO. RR1 (Sht 2)

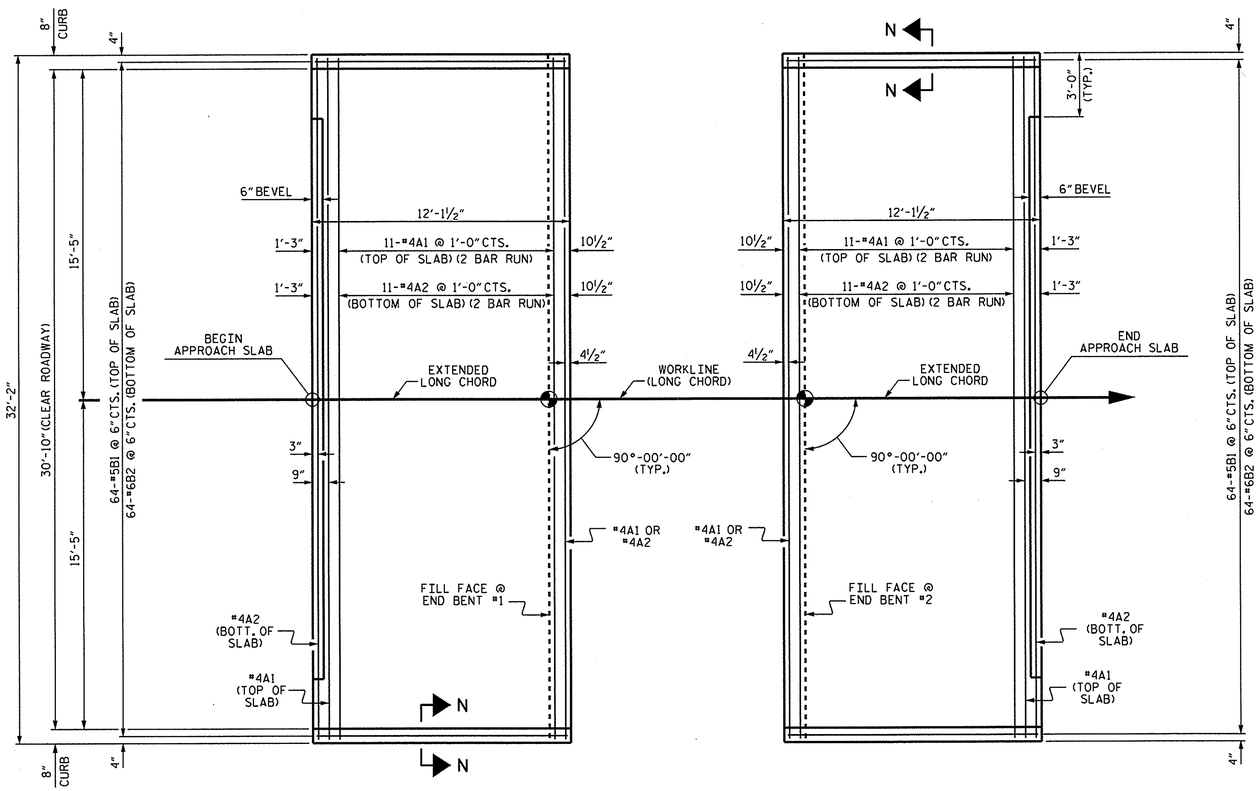

PLAN @ END BENT #1

PLAN @ END BENT #2

DIMENSIONS SHOWN ARE TYPICAL FOR BOTH APPROACH SLABS

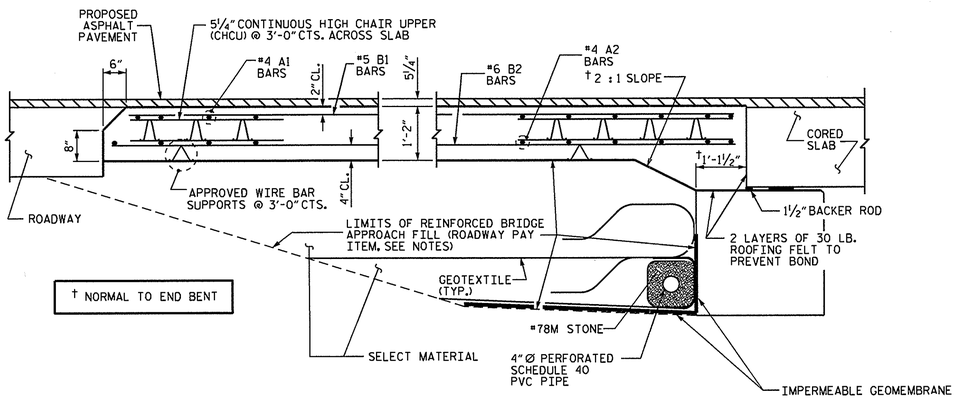

SECTION THRU SLAB

NOTES

FOR REINFORCED BRIDGE APPROACH FILL INCLUDING GEOTEXTILE, IMPERMEABLE GEOMEMBRANE, 4" Ø DRAINAGE PIPE, #78M STONE, AND SELECT MATERIAL, SEE ROADWAY PLANS.

AREA BETWEEN THE WINGWALL AND APPROACH SLAB SHALL BE GRADED TO DRAIN THE WATER AWAY FROM THE FILL FACE OF THE BRIDGE AND SHALL BE PAVED. SEE ROADWAY PLANS.

APPROACH SLAB GROOVING IS NOT REQUIRED.

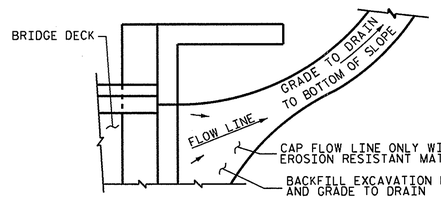

NOTE: IF THE APPROACH SLAB IS NOT CONSTRUCTED IMMEDIATELY AFTER THE BACKFILLING OF THE END BENT EXCAVATION, GRADE TO DRAIN TO THE BOTTOM OF THE SLOPE AND PROVIDE EROSION RESISTANT MATERIAL, SUCH AS FIBERGLASS ROVING OR AS DIRECTED BY THE ENGINEER TO PREVENT SOIL EROSION AND TO PROTECT THE AREA ADJACENT TO THE STRUCTURE. THE CONTRACTOR WILL BE REQUIRED TO REMOVE THESE MATERIALS PRIOR TO CONSTRUCTION OF THE APPROACH SLAB.

TEMPORARY DRAINAGE DETAIL

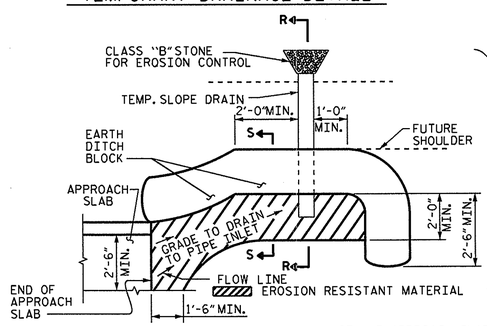

NOTE: IMMEDIATELY AFTER THE CONSTRUCTION OF THE APPROACH SLAB, THE CONTRACTOR SHALL PROVIDE TEMPORARY BERM AND SLOPE DRAIN. CONTRACTOR SHALL GRADE TO PIPE INLET AND PROVIDE EROSION RESISTANT MATERIAL AS SHOWN. THE EROSION RESISTANT MATERIAL SHALL BE EITHER 1) ASPHALT PLANT MIX, TYPE 1 OR TYPE 2, MIN. 2" DEPTH, 2) EROSION CONTROL MAT, OR 3) CONCRETE, AS DIRECTED BY THE ENGINEER. THE SLOPE DRAIN SHALL CONSIST OF A NON-PERFORATED TEMPORARY DRAINAGE PIPE, 12 INCHES IN DIAMETER.

PLAN VIEW

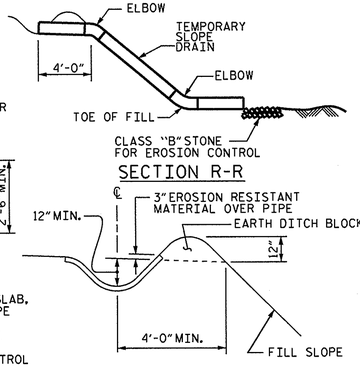

SECTION R-R

SECTION S-S

TEMPORARY BERM AND SLOPE DRAIN DETAILS

(TO BE USED WHEN SHOULDER BERM GUTTER IS REQUIRED)

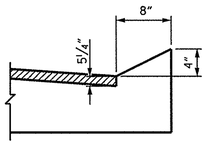

SECTION N-N

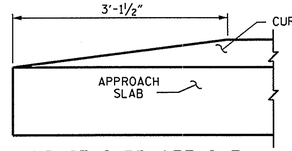

END OF CURB WITHOUT SHOULDER BERM GUTTER

CURB DETAILS

SPLICE LENGTHS		
BAR SIZE	EPOXY COATED	UNCOATED
#4	2'-0"	1'-9"
#5	2'-6"	2'-2"
#6	3'-10"	2'-7"

BILL OF MATERIAL

APPROACH SLAB AT EB #1

BAR	NO.	SIZE	TYPE	LENGTH	WEIGHT
* A1	26	#4	STR	16'-11"	294
A2	26	#4	STR	16'-9"	291
* B1	64	#5	STR	11'-2"	745
B2	64	#6	STR	11'-8"	1121
REINFORCING STEEL				LBS.	1412
* EPOXY COATED REINFORCING STEEL				LBS.	1039
CLASS AA CONCRETE				C.Y.	19.9

APPROACH SLAB AT EB #2

BAR	NO.	SIZE	TYPE	LENGTH	WEIGHT
* A1	26	#4	STR	16'-11"	294
A2	26	#4	STR	16'-9"	291
* B1	64	#5	STR	11'-2"	745
B2	64	#6	STR	11'-8"	1121
REINFORCING STEEL				LBS.	1412
* EPOXY COATED REINFORCING STEEL				LBS.	1039
CLASS AA CONCRETE				C.Y.	19.9

PROJECT NO. 17BP.2.R.52

GREENE COUNTY

STATION: 13+40.00 -L-

STATE OF NORTH CAROLINA
DEPARTMENT OF TRANSPORTATION
RALEIGH

STANDARD BRIDGE APPROACH SLAB FOR PRESTRESSED CONCRETE CORED SLAB UNIT

90° SKEW

NORTH CAROLINA PROFESSIONAL SEAL 22005 ENGINEER J. KEITH PASCHAL

10.25.13

REVISIONS						SHEET NO.
NO.	BY:	DATE:	NO.	BY:	DATE:	S-13
1			3			TOTAL SHEETS
2			4			13

ASSEMBLED BY : C.B. PRUETT	DATE : 10/01/13	
CHECKED BY : M.D. PISO	DATE : 10/11/13	
DRAWN BY : SHS/MAA 5-09	REV. 12-11	MAA/AAC
CHECKED BY : BCH 5-09		

25-OCT-2013 08:17
S:\DPGI\Keith\17BP.2.R.52\Final Plans\17BP.2.R.52_SD_CS.dgn
kpaschal

STD. NO. BAS_33_90S

STANDARD NOTES

DESIGN DATA:

SPECIFICATIONS	A.A.S.H.T.O. (CURRENT)
LIVE LOAD	SEE PLANS
IMPACT ALLOWANCE	SEE A.A.S.H.T.O.
STRESS IN EXTREME FIBER OF	
STRUCTURAL STEEL - AASHTO M270 GRADE 36	20,000 LBS. PER SQ. IN.
- AASHTO M270 GRADE 50W	27,000 LBS. PER SQ. IN.
- AASHTO M270 GRADE 50	27,000 LBS. PER SQ. IN.
REINFORCING STEEL IN TENSION	
GRADE 60	24,000 LBS. PER SQ. IN.
CONCRETE IN COMPRESSION	1,200 LBS. PER SQ. IN.
CONCRETE IN SHEAR	SEE A.A.S.H.T.O.
STRUCTURAL TIMBER - TREATED OR	
UNTREATED - EXTREME FIBER STRESS	1,800 LBS. PER SQ. IN.
COMPRESSION PERPENDICULAR TO GRAIN OF TIMBER	375 LBS. PER SQ. IN.
EQUIVALENT FLUID PRESSURE OF EARTH	30 LBS. PER CU. FT. (MINIMUM)

MATERIAL AND WORKMANSHIP:

EXCEPT AS MAY OTHERWISE BE SPECIFIED ON PLANS OR IN THE SPECIAL PROVISIONS, ALL MATERIAL AND WORKMANSHIP SHALL BE IN ACCORDANCE WITH THE 2012 "STANDARD SPECIFICATIONS FOR ROADS AND STRUCTURES" OF THE N. C. DEPARTMENT OF TRANSPORTATION.

STEEL SHEET PILING FOR PERMANENT OR TEMPORARY APPLICATIONS SHALL BE HOT ROLLED.

CONCRETE:

UNLESS OTHERWISE REQUIRED ON PLANS, CLASS A CONCRETE SHALL BE USED FOR ALL PORTIONS OF ALL STRUCTURES WITH THE EXCEPTION THAT: CLASS AA CONCRETE SHALL BE USED IN BRIDGE SUPERSTRUCTURES, ABUTMENT BACKWALLS, AND APPROACH SLABS; AND CLASS B CONCRETE SHALL BE USED FOR SLOPE PROTECTION AND RIP RAP.

CONCRETE CHAMFERS:

UNLESS OTHERWISE NOTED ON THE PLANS, ALL EXPOSED CORNERS ON STRUCTURES SHALL BE CHAMFERED 3/4" WITH THE FOLLOWING EXCEPTIONS: TOP CORNERS OF CURBS MAY BE ROUNDED TO 1-1/2" RADIUS WHICH IS BUILT INTO CURB FORMS; CORNERS OF TRANSVERSE FLOOR EXPANSION JOINTS SHALL BE ROUNDED WITH A 1/4" FINISHING TOOL UNLESS OTHERWISE REQUIRED ON PLANS; AND CORNERS OF EXPANSION JOINTS IN THE ROADWAY FACES AND TOPS OF CURBS AND SIDEWALKS SHALL BE ROUNDED TO A 1/4" RADIUS WITH A FINISHING STONE OR TOOL UNLESS OTHERWISE REQUIRED ON PLANS.

DOWELS:

DOWELS WHEN INDICATED ON PLANS AS FOR CULVERT EXTENSIONS, SHALL BE EMBEDDED AT LEAST 12" INTO THE OLD CONCRETE AND GROUTED INTO PLACE WITH 1:2 CEMENT MORTAR.

ALLOWANCE FOR DEAD LOAD DEFLECTION, SETTLEMENT, ETC. IN CASTING SUPERSTRUCTURES:

BRIDGES SHALL BE BUILT ON THE GRADE OR VERTICAL CURVE SHOWN ON PLANS. SLABS, CURBS AND PARAPETS SHALL CONFORM TO THE GRADE OR CURVE.

ALL DIMENSIONS WHICH ARE GIVEN IN SECTION AND ARE AFFECTED BY DEAD LOAD DEFLECTIONS ARE DIMENSIONS AT CENTER LINE OF BEARING UNLESS OTHERWISE NOTED ON PLANS. IN SETTING FORMS FOR STEEL BEAM BRIDGES AND PRESTRESSED CONCRETE GIRDER BRIDGES, ADJUSTMENTS SHALL BE MADE DUE TO THE DEAD LOAD DEFLECTIONS FOR THE ELEVATIONS SHOWN. WHERE BLOCKS ARE SHOWN OVER BEAMS FOR BUILDING UP TO THE SLAB, THE VERTICAL DIMENSIONS OF THE BLOCKS SHALL BE ADJUSTED BETWEEN BEARINGS TO COMPENSATE FOR DEAD LOAD DEFLECTIONS, VERTICAL CURVE ORDINATE, AND ACTUAL BEAM CAMBER. WHERE BOTTOM OF SLAB IS IN LINE WITH BOTTOM OF TOP FLANGES, DEPTH OF SLAB BETWEEN BEARINGS SHALL BE ADJUSTED TO COMPENSATE FOR DEAD LOAD DEFLECTION, VERTICAL CURVE ORDINATE, AND ACTUAL BEAM CAMBER.

IN SETTING FALSEWORK AND FORMS FOR REINFORCED CONCRETE SPANS, AN ALLOWANCE SHALL BE MADE FOR DEAD LOAD DEFLECTIONS, SETTLEMENT OF FALSEWORK, AND PERMANENT CAMBER WHICH SHALL BE PROVIDED FOR IN ADDITION TO THE ELEVATIONS SHOWN. AFTER REMOVAL OF THE FALSEWORK, THE FINISHED STRUCTURES SHALL CONFORM TO THE PROFILE AND ELEVATIONS SHOWN ON THE PLANS AND CONSTRUCTION ELEVATIONS FURNISHED BY THE ENGINEER.

DETAILED DRAWINGS FOR FALSEWORK OR FORMS FOR BRIDGE SUPERSTRUCTURE AND ANY STRUCTURE OR PARTS OF A STRUCTURE AS NOTED ON THE PLANS SHALL BE SUBMITTED TO THE ENGINEER FOR APPROVAL BEFORE CONSTRUCTION OF THE FALSEWORK OR FORMS IS STARTED.

REINFORCING STEEL:

ALL REINFORCING STEEL SHALL BE DEFORMED. DIMENSIONS RELATIVE TO PLACEMENT OF REINFORCING ARE TO CENTERS OF BARS UNLESS OTHERWISE INDICATED IN THE PLANS. DIMENSIONS ON BAR DETAILS ARE TO CENTERS OF BARS OR ARE OUT TO OUT AS INDICATED ON PLANS.

WIRE BAR SUPPORTS SHALL BE PROVIDED FOR REINFORCING STEEL WHERE INDICATED ON THE PLANS. WHEN BAR SUPPORT PIECES ARE PLACED IN CONTINUOUS LINES, THEY SHALL BE SO PLACED THAT THE ENDS OF THE SUPPORTING WIRES SHALL BE LAPPED TO LOCK LEGS ON ADJOINING PIECES.

STRUCTURAL STEEL:

AT THE CONTRACTOR'S OPTION, HE MAY SUBSTITUTE 7/8" Ø SHEAR STUDS FOR THE 3/4" Ø STUDS SPECIFIED ON THE PLANS. THIS SUBSTITUTION SHALL BE MADE AT THE RATE OF 3 - 7/8" Ø STUDS FOR 4 - 3/4" Ø STUDS, AND STUD SPACING CHANGES SHALL BE MADE AS NECESSARY TO PROVIDE THE SAME EQUIVALENT NUMBER OF 7/8" Ø STUDS ALONG THE BEAM AS SHOWN FOR 3/4" Ø STUDS BASED ON THE RATIO OF 3 - 7/8" Ø STUDS FOR 4 - 3/4" Ø STUDS. STUDS OF THE LENGTH SPECIFIED ON THE PLANS MUST BE PROVIDED. THE MAXIMUM SPACING SHALL BE 2'-0".

EXCEPT AT THE INTERIOR SUPPORTS OF CONTINUOUS BEAMS WHERE THE COVER PLATE IS IN CONTACT WITH BEARING PLATE, THE CONTRACTOR MAY, AT HIS OPTION, SUBSTITUTE FOR THE COVER PLATES DESIGNATED ON THE PLANS COVER PLATES OF THE EQUIVALENT AREA PROVIDED THESE PLATES ARE AT LEAST 5/16" IN THICKNESS AND DO NOT EXCEED A WIDTH EQUAL TO THE FLANGE WIDTH LESS 2" OR A THICKNESS EQUAL TO 2 TIMES THE FLANGE THICKNESS. THE SIZE OF FILLET WELDS SHALL CONFORM TO THE REQUIREMENTS OF THE CURRENT ANSI/AASHTO/AWS "BRIDGE WELDING CODE". ELECTROSLAG WELDING WILL NOT BE PERMITTED.

WITH THE SOLE EXCEPTION OF EDGES AT SURFACES WHICH BEAR ON OTHER SURFACES, ALL SHARP EDGES AND ENDS OF SHAPES AND PLATES SHALL BE SLIGHTLY ROUNDED BY SUITABLE MEANS TO A RADIUS OF APPROXIMATELY 1/16 INCH OR EQUIVALENT FLAT SURFACE AT A SUITABLE ANGLE PRIOR TO PAINTING, GALVANIZING, OR METALLIZING.

HANDRAILS AND POSTS:

METAL STANDARDS AND FACES OF THE CONCRETE END POSTS FOR THE METAL RAIL SHALL BE SET NORMAL TO THE GRADE OF THE CURB, UNLESS OTHERWISE SHOWN ON PLANS. THE METAL RAIL AND TOPS OF CONCRETE POSTS USED WITH THE ALUMINUM RAIL SHALL BE BUILT PARALLEL TO THE GRADE OF THE CURB.

METAL HANDRAILS SHALL BE IN ACCORDANCE WITH THE PLANS. RAILS SHALL BE AS MANUFACTURED FOR BRIDGE RAILING. CASTINGS SHALL BE OF A UNIFORM APPEARANCE. FINS AND OTHER DEFORMATIONS RESULTING FROM CASTING OR OTHERWISE SHALL BE REMOVED IN A MANNER SO THAT A UNIFORM COLORING OF THE COMPLETED CASTING SHALL BE OBTAINED. CASTINGS WITH DISCOLORATIONS OR OF NON-UNIFORM COLORING WILL NOT BE ACCEPTED. CERTIFIED MILL REPORTS ARE REQUIRED FOR METAL RAILS AND POSTS.

SPECIAL NOTES:

GENERALLY, IN CASE OF DISCREPANCY, THIS STANDARD SHEET OF NOTES SHALL GOVERN OVER THE SPECIFICATIONS, BUT THE REMAINDER OF THE PLANS SHALL GOVERN OVER NOTES HEREON, AND SPECIAL PROVISIONS SHALL GOVERN OVER ALL. SEE SPECIFICATIONS ARTICLE 105-4.

ENGLISH

JANUARY, 1990

STD. NO. SN

REV. 6-16-95 EEM (V) RGW REV. 5-7-03 RWW (V) JTE REV. 10-1-11 MAA (V) GM
REV. 8-16-99 RWW (V) LES REV. 5-1-06 TLA (V) GM

TIP PROJECT: 17BP.2.R.52

CONTRACT:

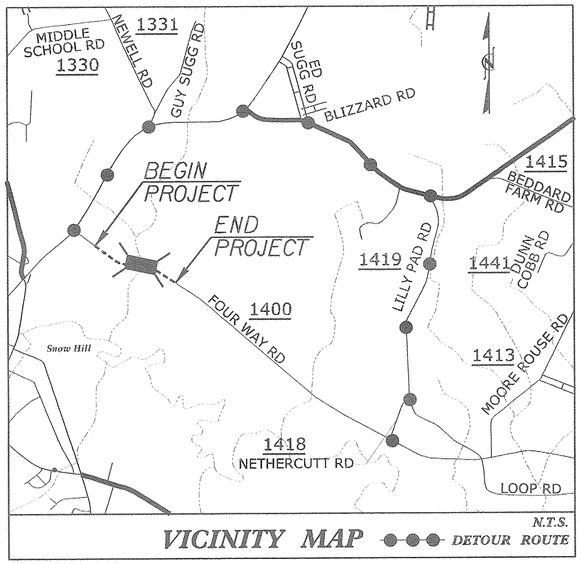

VICINITY MAP ●●● DETOUR ROUTE

STATE OF NORTH CAROLINA
DIVISION OF HIGHWAYS

UTILITY CONSTRUCTION PLANS
GREENE COUNTY

LOCATION: BRIDGE NO. 040 OVER PANTHER SWAMP ON SR 1400 (FOUR WAY RD.)

TYPE OF WORK: UTILITIES CONSTRUCTION

STATE	STATE PROJECT REFERENCE NO.	SHEET NO.	TOTAL SHEETS
N.C.	17BP.2.R.52	UC-01	5

UTILITY DESIGN ENGINEER

NORTH CAROLINA PROFESSIONAL SEAL 27681 ENGINEER KEVIN C. ZDEB

2013-NOV-05

HNTB NORTH CAROLINA, P.C.
343 E. Six Forks Road, Suite 200
Raleigh, North Carolina 27609
NC License No: C-1554

DATE: OCTOBER 30, 2013

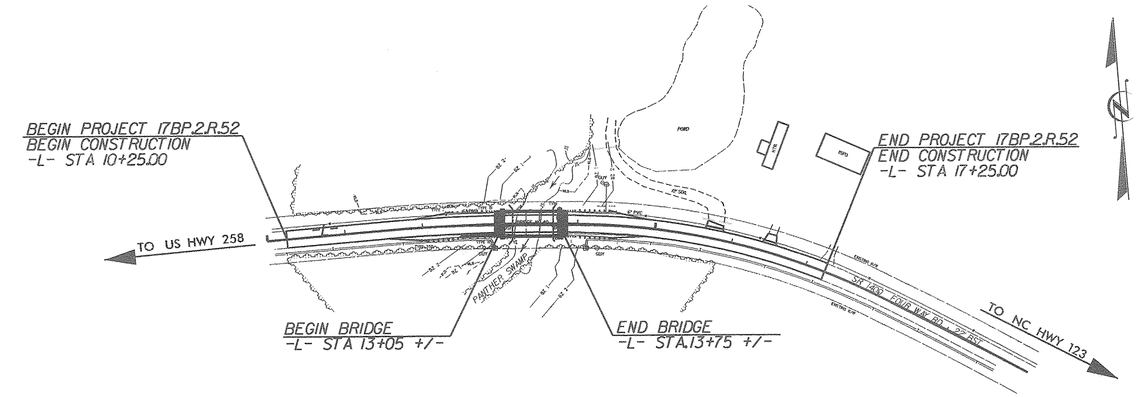

GRAPHIC SCALES

30 15 0 30 60
PLANS

30 15 0 30 60
PROFILE (HORIZONTAL)

10 5 0 10 20
PROFILE (VERTICAL)

PROJECT LENGTH

LENGTH ROADWAY OF TIP PROJECT 17BP.2.R.52 =	0.120 MI.
LENGTH OF STRUCTURE TIP PROJECT 17BP.2.R.52 =	0.013 MI.
TOTAL LENGTH OF TIP PROJECT 17BP.2.R.52 =	0.133 MI.

INDEX OF SHEETS

SHEET NO.	DESCRIPTION
UC-01	TITLE SHEET
UC-02	SYMBOLOGY SHEET
UC-03	GENERAL NOTES SHEET
UC-03A	DETAIL SHEET
UC-04	PLAN SHEET

UTILITY OWNERS ON PROJECT

WATER - GREENE COUNTY

UTILITY DESIGN BY:

MA Engineering CONSULTANTS, INC.
598 East Chatham Street, Suite 137 Cary, NC 27511
Phone: 919.297.0220 Fax. 919.297.0221

NCDOT PROJECT ENGINEER:
MARIA ROGERSON, P.E.

PREPARED FOR:
NORTH CAROLINA
DEPARTMENT OF TRANSPORTATION
DIVISION BRIDGE PROGRAM

PROJECT REFERENCE NO.	SHEET NO.
17BP.2.R.52	UC-02

STATE OF NORTH CAROLINA
DIVISION OF HIGHWAYS

UTILITIES PLAN SHEET SYMBOLS

NORTH CAROLINA PROFESSIONAL SEAL 007661 ENGINEER KEVIN C. ZDEB

2013-OCT-08

PROPOSED WATER SYMBOLS

- Water Line (Sized as Shown) — 12" WL
- 11¼ Degree Bend
- 22½ Degree Bend
- 45 Degree Bend
- 90 Degree Bend
- Plug
- Tee
- Cross
- Reducer
- Gate Valve — GV
- Butterfly Valve — BV
- Tapping Valve — TGV
- Line Stop — LS
- Line Stop with Bypass — LS/BP
- Blow Off — BO
- Fire Hydrant — PFH
- Relocate Fire Hydrant — REH
- Remove Fire Hydrant — REM FH
- Water Meter — PWM
- Relocate Water Meter — RWM
- Remove Water Meter — REM WM
- Water Pump Station — PS(W)
- RPZ Backflow Preventer — PRPZ
- DCV Backflow Preventer — PBFP
- Relocate RPZ Backflow Preventer — RRPZ
- Relocate DCV Backflow Preventer — RBFP

PROPOSED SEWER SYMBOLS

- Gravity Sewer Line (Sized as Shown) — 12" SS
- Force Main Sewer Line (Sized as Shown) — 12" FSS
- Manhole (Sized per Note)
- Sewer Pump Station — PS(SS)

PROPOSED MISCELLANOUS UTILITIES SYMBOLS

- Power Pole
- Telephone Pole
- Joint Use Pole
- Telephone Pedestal — TEL PED
- Utility Line by Others (Type as Shown) — PROP O/H POW LINES
- Trenchless Installation — 12" TL INSTALL
- Encasement by Open Cut — 24" ENCAS BY OC
- Encasement — 24" ENCASEMENT
- Thrust Block
- Air Release Valve — AR
- Utility Vault — UV
- Concrete Pier — CP
- Steel Pier — SP
- Plan Note — NOTE
- Pay Item Note — PAY ITEM

EXISTING UTILITIES SYMBOLS

- Power Pole
- Telephone Pole
- Joint Use Pole
- Utility Pole
- Utility Pole with Base
- H-Frame Pole
- Power Transmission Line Tower
- Water Manhole
- Power Manhole
- Telephone Manhole
- Sanitary Sewer Manhole
- Hand Hole for Cable
- Power Transformer
- Telephone Pedestal
- CATV Pedestal
- Gas Valve
- Gas Meter
- Located Miscellaneous Utility Object
- Abandoned According to Utility Records — AATUR
- End of Information — E.O.I.
- *Underground Power Line — P
- *Underground Telephone Cable — T
- *Underground Telephone Conduit — TC
- *Underground Fiber Optics Telephone Cable — T FO
- *Underground TV Cable — TV
- *Underground Fiber Optics TV Cable — TV FO
- *Underground Gas Pipeline — G
- Aboveground Gas Pipeline — A/G Gas
- *Underground Water Line — W
- Aboveground Water Line — A/G Water
- *Underground Gravity Sanitary Sewer Line — SS
- Aboveground Gravity Sanitary Sewer Line — A/G Sanitary Sewer
- *Underground SS Forced Main Line — FSS
- Underground Unknown Utility Line — ?UTL
- SUE Test Hole
- Water Meter
- Water Valve
- Fire Hydrant
- Sanitary Sewer Cleanout

*For Existing Utilities

- Utility Line Drawn from Record (Type as Shown) — W
- Designated Utility Line (Type as Shown) — W

REV: 2/1/2012

8/17/95

REVISIONS

PROJECT REFERENCE NO.	SHEET NO.
17BP.2.R.52	UC-03

UTILITY DESIGN ENGINEER

NORTH CAROLINA PROFESSIONAL SEAL 032911 ENGINEER KEVIN C. ZDES

2013-OCT-08

MA Engineering CONSULTANTS, INC. 598 E. Chatham Street, Suite 137 Cary, N. C. 27511

HNTB HNTB NORTH CAROLINA, P.C. 343 E. Six Forks Road, Suite 200 Raleigh, North Carolina 27609 NC License No: C-1554

DATE: OCTOBER 7, 2013

UTILITY CONSTRUCTION

GENERAL NOTES:

1. THE PROPOSED UTILITY CONSTRUCTION SHALL MEET THE APPLICABLE REQUIREMENTS OF NC DEPARTMENT OF TRANSPORTATION'S "STANDARD SPECIFICATIONS FOR ROADS AND STRUCTURES" DATED JANUARY 2012.

2. THE EXISTING UTILITIES BELONG TO

GREENE COUNTY
CONTACT: DAVID JONES
PHONE: 252-747-5720

3. ALL WATER LINES TO BE INSTALLED WITHIN COMPLIANCE OF THE RULES AND REGULATIONS OF THE NORTH CAROLINA DEPARTMENT OF ENVIRONMENTAL AND NATURAL RESOURCES, DIVISION OF WATER RESOURCES - PUBLIC WATER SUPPLY SECTION. ALL SEWER LINES TO BE INSTALLED WITHIN COMPLIANCE OF THE RULES AND REGULATIONS OF THE NORTH CAROLINA DEPARTMENT OF ENVIRONMENT AND NATURAL RESOURCES, DIVISION OF WATER RESOURCES - WATER QUALITY SECTION. PERFORM ALL WORK IN ACCORDANCE WITH THE APPLICABLE PLUMBING CODES.

4. THE UTILITY OWNER OWNS THE EXISTING UTILITY FACILITIES AND WILL OWN THE NEW UTILITY FACILITIES AFTER ACCEPTANCE BY THE DEPARTMENT AND UTILITY OWNER. THE DEPARTMENT OWNS THE CONSTRUCTION CONTRACT AND HAS ADMINISTRATIVE AUTHORITY. COMMUNICATIONS AND DECISIONS BETWEEN THE CONTRACTOR AND UTILITY OWNER ARE NOT BINDING UPON THE DEPARTMENT OR THIS CONTRACT UNLESS AUTHORIZED BY THE ENGINEER. AGREEMENTS BETWEEN THE UTILITY OWNER AND CONTRACTOR FOR THE WORK THAT IS NOT PART OF THIS CONTRACT OR IS SECONDARY TO THIS CONTRACT ARE ALLOWED, BUT ARE NOT BINDING UPON THE DEPARTMENT.

5. PROVIDE ACCESS FOR THE DEPARTMENT PERSONNEL AND THE OWNER'S REPRESENTATIVES TO ALL PHASES OF CONSTRUCTION. NOTIFY DEPARTMENT PERSONNEL AND THE UTILITY OWNER TWO WEEKS PRIOR TO COMMENCEMENT OF ANY WORK AND ONE WEEK PRIOR TO SERVICE INTERRUPTION. KEEP UTILITY OWNERS' REPRESENTATIVES INFORMED OF WORK PROGRESS AND PROVIDE OPPROTUNITY FOR INSPECTION OF CONSTRUCTION AND TESTING.

6. THE PLANS DEPICT THE BEST AVAILABLE INFORMATION FOR THE LOCATION, SIZE, AND TYPE OF MATERIAL FOR ALL EXISTING UTILITIES. MAKE INVESTIGATIONS FOR DETERMINING THE EXACT LOCATION, SIZE, AND TYPE MATERIAL OF THE EXISTING FACILITIES AS NECESSARY FOR THE CONSTRUCTION OF THE PROPOSED UTILITIES AND FOR AVOIDING DAMAGE TO EXISTING FACILITIES. REPAIR ANY DAMAGE INCURRED TO EXISTING FACILITIES TO THE ORIGINAL OR BETTER CONDITION AT NO ADDITONAL COST TO THE DEPARTMENT.

7. MAKE FINAL CONNECTIONS OF THE NEW WORK TO THE EXISTING SYSTEM WHERE INDICATED ON THE PLANS, AS REQUIRED TO FIT THE ACTUAL CONDITIONS, OR AS DIRECTED.

8. MAKE CONNECTIONS BETWEEN EXISTING AND PROPOSED UTILITIES AT TIMES MOST CONVENIENT TO THE PUBLIC, WITHOUT ENDANGERING THE UTILITY SERVICE, AND IN ACCORDANCE WITH THE UTILITY OWNER'S REQUIREMENTS. MAKE CONNECTIONS ON WEEKENDS, AT NIGHT, AND ON HOLIDAYS IF NECESSARY.

9. ALL UTILITY MATERIALS SHALL BE APPROVED PRIOR TO DELIVERY TO THE PROJECT. SEE 1500-7, " SUBMITTALS AND RECORDS" IN SECTION 1500 OF THE STANDARD SPECIFICATIONS.

10. CONTRACTOR SHALL NOTIFY NC ONE-CALL AT 1-800-632-4949 PRIOR TO COMMENCEMENT OF ANY CONSTRUCTION ACTIVITY SUCH THAT ALL EXISTING UTILITIES CAN BE MARKED. FURTHERMORE, THE CONTRACTOR SHALL MAKE EVERY EFFORT TO CONTACT ANY UTILITY OWNERS THAT ARE NOT MEMBERS OF NC ONE-CALL AND HAVE FACILITIES RESIDING WITHIN THE PROJECT LIMITS.

PROJECT SPECIFIC NOTES:

1. ALL WATER LINE PIPE FOR OPEN TRENCH CONSTRUCTION SHALL BE RESTRAINED JOINT DUCTILE IRON PRESSURE CLASS 350.

2. ALL FITTINGS SHALL BE DUCTILE IRON PRESSURE CLASS 350.

3. ALL FITTINGS (BENDS, TEES, CROSSES, REDUCERS, PLUGS, ETC.) SHALL BE ADEQUATELY RESTRAINED BY THE USE OF RESTRAINING GLANDS AND/OR CAST IN PLACE CONCRETE THRUST RESTRAINTS AS DETAILED ON THESE PLANS OR DIRECTED BY THE ENGINEER.

4. THE EXISTING 6" PVC LINE SHALL BE RESTRAINED ON THE PORTION TO REMAIN AFTER VALVE INSTALLATION. THE CONTRACTOR SHALL EXCAVATE THE EXISTING PVC LINE AND INSTALL THE BELL RESTRAINT CLAMPS AT EVERY BELL JOINT FOR THE DISTANCE NOTED IN THE DETAILS ON SHEET UC-3A.

PROJECT QUANTITIES:

Job Name: 17BP.2.R.52 Date: 8/29/2013

Item Number	Description	Quantity	
5325600000-E	6" WATER LINE	40	LF
5800000000-E	ABANDON 6" UTILITY PIPE	40	LF

5/28/99

PROJECT REFERENCE NO.	SHEET NO.
17BP.2.R.52	UC-03A

UTILITY DESIGN ENGINEER

NORTH CAROLINA PROFESSIONAL SEAL 036202 ENGINEER KEVIN C. ZDEB

2013-OCT-08

MA Engineering CONSULTANTS, INC. 598 E. Chatham, Street, Suite 137 Cary, N. C. 27511

HNTB HNTB NORTH CAROLINA, P.C. 343 E. Six Forks Road, Suite 200 Raleigh, North Carolina 27609 NC License No: C-1554

DATE: OCTOBER 7, 2013

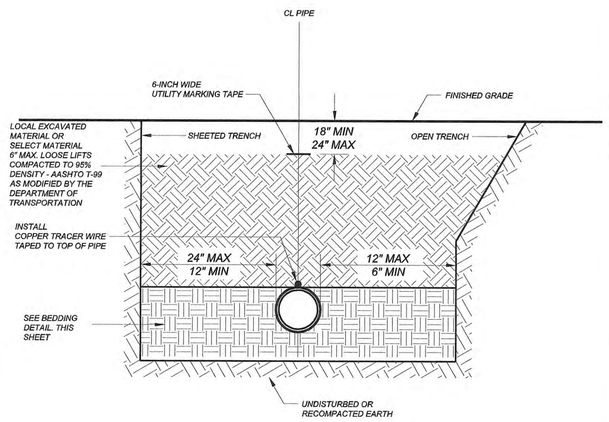

NOTES:
1. ALL SHORING & TRENCHING SHALL COMPLY WITH OSHA SAFETY STANDARDS FOR THE CONSTRUCTION INDUSTRY.
2. BELL HOLES NOT SHOWN.
3. ALL BACKFILL MATERIAL SHALL BE FREE OF ROCKS, FOREIGN MATERIAL, AND FROZEN EARTH.

GENERAL TRENCH DETAIL

NTS

MAXIMUM TRENCH WIDTH AT TOP OF PIPE

NOMINAL PIPE SIZE (INCHES)	TRENCH WIDTH (INCHES)	NOMINAL PIPE SIZE (INCHES)	TRENCH WIDTH (INCHES)
4	28	20	44
6	30	24	48
8	32	30	54
10	34	36	60
12	36	42	66
14	38	48	72
16	40	54	78
18	42		

PIPE BEDDING DETAIL

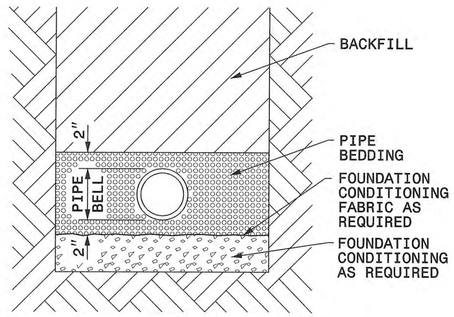

PLACE FOUNDATION CONDITIONING MATERIAL BELOW BEDDING IF REQUIRED, AS DIRECTED BY ENGINEER. PIPE BEDDED IN SELECT MATERIAL, CLASS II (TYPE 1) OR CLASS III. TRENCH BACKFILLED IN LOOSE 6" LAYERS COMPACTED TO TOP OF TRENCH USING LOCAL EXCAVATED MATERIAL IF APPROVED BY THE ENGINEER, OR SELECT MATERIAL. ALL MATERIAL SHALL BE FREE OF ROCKS, FOREIGN MATERIAL, AND FROZEN EARTH. COMPACTION SHALL BE TO APPROXIMATELY 95% DENSITY IN ACCORDANCE WITH AASHTO T-99 AS MODIFIED BY THE DEPARTMENT OF TRANSPORTATION.

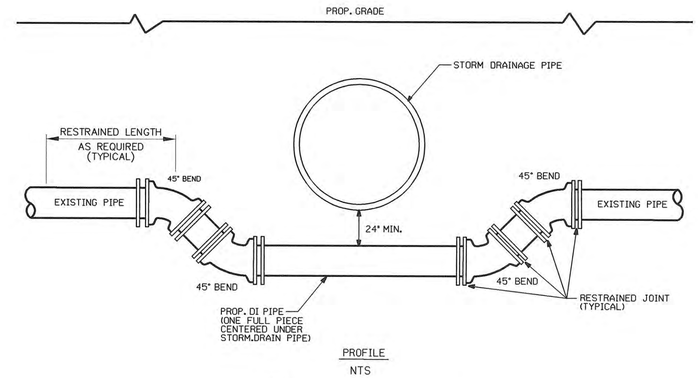

PROFILE

NTS

NOTES:
1. ALL FITTINGS AND JOINTS SHALL BE RESTRAINED JOINT DESIGN.
2. PROVIDE APPROPRIATE RESTRAINED LENGTH AS PER TABLE HEREIN.

WATER MAIN CROSSING UNDER STORM DRAINAGE PIPE

RESTRAINED JOINT DESIGN TABLE FOR PVC PIPE

FITTING	REQUIRED RESTRAINED LENGTH (FT) OF PVC PIPE BY DEPTH OF COVER							
	3 FT	4 FT	5 FT	6 FT	7 FT	8 FT	9 FT	10 FT
HORIZONTAL BENDS								
6 INCH DIA - 11.25 DEG	3	3	2	2	2	2	1	1
6 INCH DIA - 22.5 DEG	6	5	4	3	3	3	2	2
6 INCH DIA - 45 DEG	12	9	8	7	6	5	5	4
6 INCH DIA - 90 DEG	29	22	18	15	13	12	10	9
VERTICAL BENDS - DOWN								
6 INCH DIA - 11.25 DEG	8	6	5	4	4	3	3	3
6 INCH DIA - 22.5 DEG	16	12	10	8	7	6	6	5
6 INCH DIA - 45 DEG	32	25	20	17	15	13	12	10
VERTICAL BENDS - UP								
6 INCH DIA - 11.25 DEG	3	3	2	2	2	2	1	1
6 INCH DIA - 22.5 DEG	6	5	4	3	3	3	2	2
6 INCH DIA - 45 DEG	12	9	8	7	6	5	5	4
DEAD ENDS / VALVES								
6 INCH DIA	78	59	48	40	34	30	27	24

ASSUMPTIONS

LAYING CONDITION = TYPE 4
SOIL DESIGNATION = ML WITH GRANULAR BACKFILL
DESIGN PRESSURE = 200 PSI (TEST PRESSURE)
SAFETY FACTOR = 1.5

NOTES

1. RL = RUN LENGTH BETWEEN FIRST JOINTS OF PIPE ALONG THE RUN LINE OF TEE.
2. RESTRAINED LENGTH IS MEASURED AS FOLLOWS:
   A. HORIZONTAL/VERTICAL BENDS: ALONG EACH SIDE OF BEND.
   B. HORIZONTAL/VERTICAL BENDS - OFFSET: ALONG THE OUTER SIDE OF EACH BEND. ALL PIPE BETWEEN THE TWO BENDS SHALL BE RESTRAINED JOINT.
   C. DEAD ENDS: ALONG PIPE FROM THE PLUG.
   D. VALVES: ALONG THE PIPE IN EACH DIRECTION FROM THE VALVE .
   E. TEES: ALONG THE BRANCH PIPE FROM THE TEE .
3. WHEN IT IS NOT POSSIBLE TO INSTALL THE RESTRAINED LENGTHS AS NOTED BY THIS TABLE, CONTRACTOR SHALL INSTALL THE APPROPRIATE CONCRETE THRUST RESTRAINTS AS PER THE DETAILS HEREIN.

BASED ON TEST PRESSURE OF 200 P.S.I.

HORIZONTAL RESTRAINT
(ALL AREAS GIVEN ARE IN SQUARE FEET)

PIPE SIZE	DEGREE OF BEND	LBS. STATIC THRUST *	ALLOWABLE SOIL BEARING (PSF) 1000	2000	3000	4000	5000	6000	7000	8000
4"	11 1/4°	686	1	1	1	1	1	1	1	1
	22 1/2°	1,226	1	1	1	1	1	1	1	1
	45°	2,405	2	1	1	1	1	1	1	1
	90°	4,444	4	2	1	1	1	1	1	1
	TEE/PLUG	3,143	3	2	1	1	1	1	1	1
6"	11 1/4°	1,585	2	1	1	1	1	1	1	1
	22 1/2°	2,758	3	2	1	1	1	1	1	1
	45°	5,409	5	3	2	2	1	1	1	1
	90°	9,999	10	5	3	3	2	2	2	1
	TEE/PLUG	7,088	7	4	3	2	2	1	1	1
8"	11 1/4°	2,454	3	1	1	1	1	1	1	1
	22 1/2°	4,904	5	3	2	1	1	1	1	1
	45°	9,689	10	5	3	2	2	2	2	1
	90°	17,771	18	9	6	4	4	3	3	2
	TEE/PLUG	12,568	13	6	4	3	3	2	2	2
10"	11 1/4°	3,846	4	2	2	1	1	1	1	1
	22 1/2°	7,691	8	4	3	2	2	2	1	1
	45°	15,028	15	8	5	4	3	3	2	2
	90°	27,768	28	14	9	7	6	5	4	3
	TEE/PLUG	19,635	20	10	7	5	4	3	3	2
12"	11 1/4°	5,543	6	3	2	2	1	1	1	1
	22 1/2°	11,032	11	6	4	3	2	2	2	2
	45°	21,641	22	11	7	5	4	4	3	3
	90°	39,987	40	20	13	10	8	7	6	5
	TEE/PLUG	28,274	28	14	9	7	5	5	4	4
14"	11 1/4°	7,544	8	4	3	2	2	2	1	1
	22 1/2°	15,086	15	8	5	4	3	3	2	2
	45°	29,455	29	15	10	7	6	5	4	4
	90°	54,426	54	27	18	14	11	9	8	7
	TEE/PLUG	38,485	38	19	13	10	8	6	5	5
16"	11 1/4°	9,854	10	5	3	3	2	2	2	2
	22 1/2°	19,612	20	10	7	5	4	3	3	3
	45°	38,471	38	17	13	10	8	6	5	5
	90°	71,085	71	36	24	18	14	12	10	9
	TEE/PLUG	50,265	50	25	17	13	10	8	7	6

* INCLUDES 1.25 SAFETY FACTOR

VERTICAL RESTRAINT
(ALL VOLUMES GIVEN ARE IN CUBIC YARDS)**

PIPE SIZE	RESTRAINING RODS NO.REQ'D	DIA.	DEGREE OF BEND 11 1/4°	22 1/2°	45°
4"	2	1/2"	0.25	0.50	0.75
6"	2	1/2"	0.50	1.0	1.75
8"	2	5/8"	0.75	1.50	3.0
10"	2	3/4"	1.25	2.25	4.50
12"	2	7/8"	1.75	3.25	6.50
14"	4	5/8"	2.25	4.50	8.75
16"	4	3/4"	3.0	6.0	11.50

**INCLUDES 1.50 SAFETY FACTOR

GENERAL NOTES:
1. CONCRETE SHALL BE CLASS 'B'.
2. CONCRETE SHALL NOT CONTACT BOLTS ENDS OF MECHANICAL JOINT FITTINGS.
3. CONSULT WITH ENGINEER FOR CONCRETE REQUIREMENTS ON MAINS LARGER THAN 16 INCHES. (FOR VERTICAL & HORIZONTAL BENDS)
4. ALLOWABLE SOIL BEARING SHALL BE DETERMINED BY THE ENGINEER.

REVISIONS		
NO.	DATE	DESCRIPTION

SHEET 2 OF 2

THRUST RESTRAINT FOR WATER MAINS

STATE OF NORTH CAROLINA
DIVISION OF HIGHWAYS
RALEIGH, N.C.

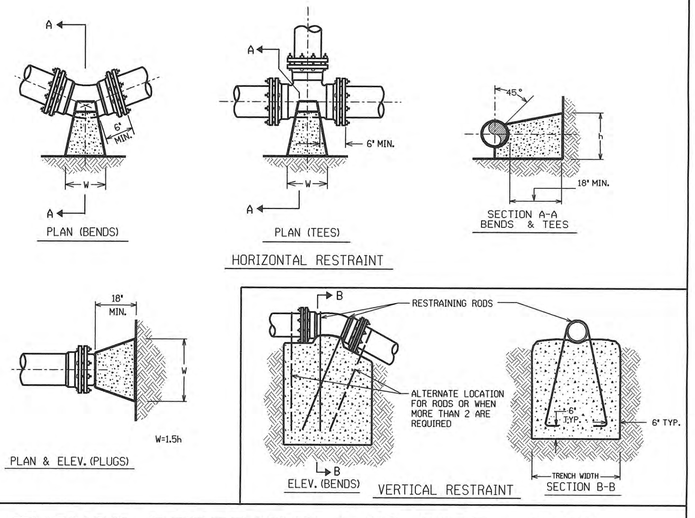

THRUST RESTRAINT FOR PIPE LINES

5/28/99

NOTE:
1. CONTRACTOR SHALL VERIFY EXISTING 6" SEWER LINE LOCATION BEFORE INSTALLING GUARDRAIL. IF IT IS FOUND TO BE IN CONFLICT, CONTRACTOR SHALL CONTACT UTILITY OWNER REGARDING RELOCATION DESIGN.

UTILITY OWNERS ON THIS PROJECT:

1. GREENE COUNTY
UTILITY: 6" WATER LINE
6" SEWER LINE
CONTACT: DAVID JONES
PHONE: 252-747-5720

PROJECT REFERENCE NO.	SHEET NO.
17BP.2.R.52	UC-04

UTILITY DESIGN ENGINEER

NORTH CAROLINA PROFESSIONAL SEAL 047665 ENGINEER KEVIN C. ZDER

2013-OCT-08

MA Engineering CONSULTANTS, INC. 598 E. Chatham Street, Suite 137 Cary, N. C. 27511

HNTB HNTB NORTH CAROLINA, P.C. 343 E. Six Forks Road, Suite 200 Raleigh, North Carolina 27609 NC License No: C-1554

DATE: OCTOBER 7, 2013

PROP. 40 LF 6" WATER LINE

PROJECT 17BP.2.R.52
CONSTRUCTION
T A.10+25.00

OT Sta. 10+00.00

JEAN D. CARROLL
DB 666 PG 124

CLASS 'B' RIP-RAP
EST. 1 TONS
EST. 5 GEO

WOODED

15" RCP-IV

BEGIN BRIDGE
-L- STA.13+05 +/-

BEGIN APP.SLAB
-L- STA.12+94 +/-

WALTER A. MURRAY
DB 644 PG 715

END BRIDGE
-L- STA.13+75 +/-

END APP.SLAB
-L- STA.13+86 +/-

POND

15" CMP

TOE PROTECTION
SEE DETAIL A
90 SY PSRM

12' SOIL

HTR

ISFD

RAY E. MURRAY, JR
DB 605 PG 146

END PRO
END CON
-L- STA

NC GRID
NAD 83 NA 2011

BZ 2
BZ 1
JS
WLB
RL
WE=34.98'
GUY
F
C
W
E
TYPE III
TYPE 350
TYPE 350C
6" PVC
6" PVC
-L-
0401
TB 2GI
BRIDGE NO.40
N 89° 55' 03.7" E
PANTHER SWAMP
CONC
15" CMP
SR 1400 FOUR WAY RD.1 22' BS
EXISTING R/W
60.00'

EXISTING SEWER TO REMAIN
SEE NOTE # 1

ALICE BARNETTE
DB 606 PG 463

ABANDON 40 LF OF
6" UTILITY PIPE

HAM FARMS INC.
DB 650 PG 386

-L- PC Sta. 11+44.68

-L- PCC Sta. 14+18.28

-L- PT Sta. 18+07.98

SCALE: 1" = 30' PLAN

10/8/2013
C:\Projects\0696\014\13402\Greene 40\Utilities\Rdy_Ut\Proj\390040_UC-04_psh.dgn
Plotted By: Kevin Zder

TIP PROJECT: 17BP.2.R.52

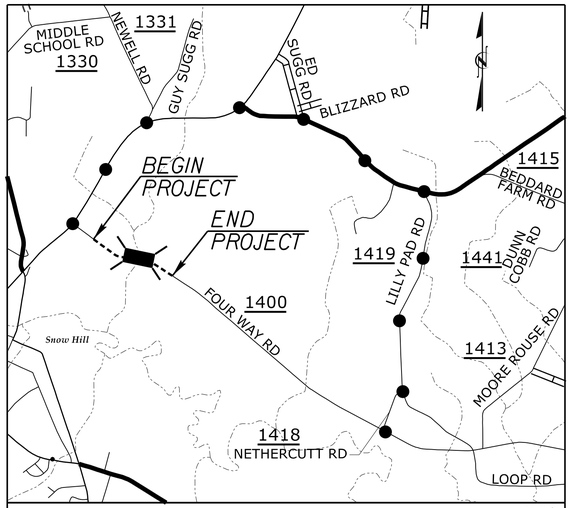

VICINITY MAP — *DETOUR ROUTE* — *N.T.S.*

STATE OF NORTH CAROLINA
DIVISION OF HIGHWAYS

T.I.P. NO.	SHEET NO.
17BP.2.R.52	UO–1

UTILITIES BY OTHERS PLANS
GREENE COUNTY

HNTB NORTH CAROLINA, P.C.
343 E. Six Forks Road, Suite 200
Raleigh, North Carolina 27609
NC License No: C-1554

DATE: OCTOBER 3, 2013

LOCATION: BRIDGE NO. 040 ON SR 1400 (FOUR WAY RD.) OVER PANTHER SWAMP

TYPE OF WORK: UTILITY BY OTHERS RELOCATION

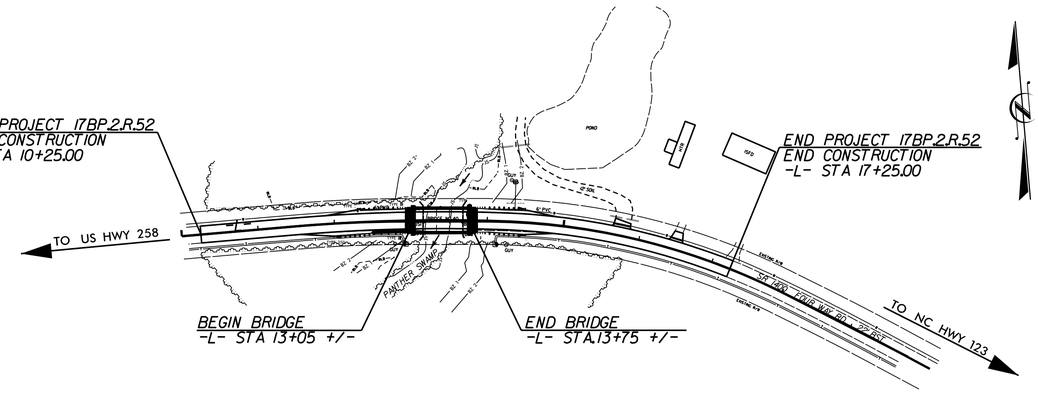

GRAPHIC SCALES

50 25 0 50 100 — PLANS

50 25 0 50 100 — PROFILE (HORIZONTAL)

10 5 0 10 20 — PROFILE (VERTICAL)

INDEX OF SHEETS

SHEET NO.	*DESCRIPTION*
UO–1	*TITLE SHEET*
UO–2	*PLAN SHEET*

UTILITY OWNERS ON PROJECT

(1) POWER – PITT & GREENE EMC

UTILITY DESIGN BY:

MA Engineering CONSULTANTS, INC.
598 East Chatham Street Suite 137 Cary, NC 27511
Phone: 919 297 0220 Fax: 919 297 0221

NCDOT PROJECT ENGINEER:
MARIA ROGERSON, P.E.

PREPARED FOR:
NORTH CAROLINA
DEPARTMENT OF TRANSPORTATION
DIVISION BRIDGE PROGRAM

01/08/98
10/3/2013
P:\DBS\0696\014\3400\Greene 40\Utilities\Rdy_UT\Proj\390040_UO-01_tsh.dgn
11:00:39 AM

PROJECT REFERENCE NO.	SHEET NO.
17BP.2.R.52	UO-02

UTILITIES BY OTHERS

NOTE:
ALL PROPOSED UTILITY WORK SHOWN ON THIS SHEET WILL BE DONE BY OTHERS

MA Engineering CONSULTANTS, INC.
598 E. Chatham Street, Suite 137
Cary, N. C. 27511

NOTES:

1. PITT & GREENE EMC WILL BACK FEED DURING CONSTRUCTION AND REMAIN IN PLACE.

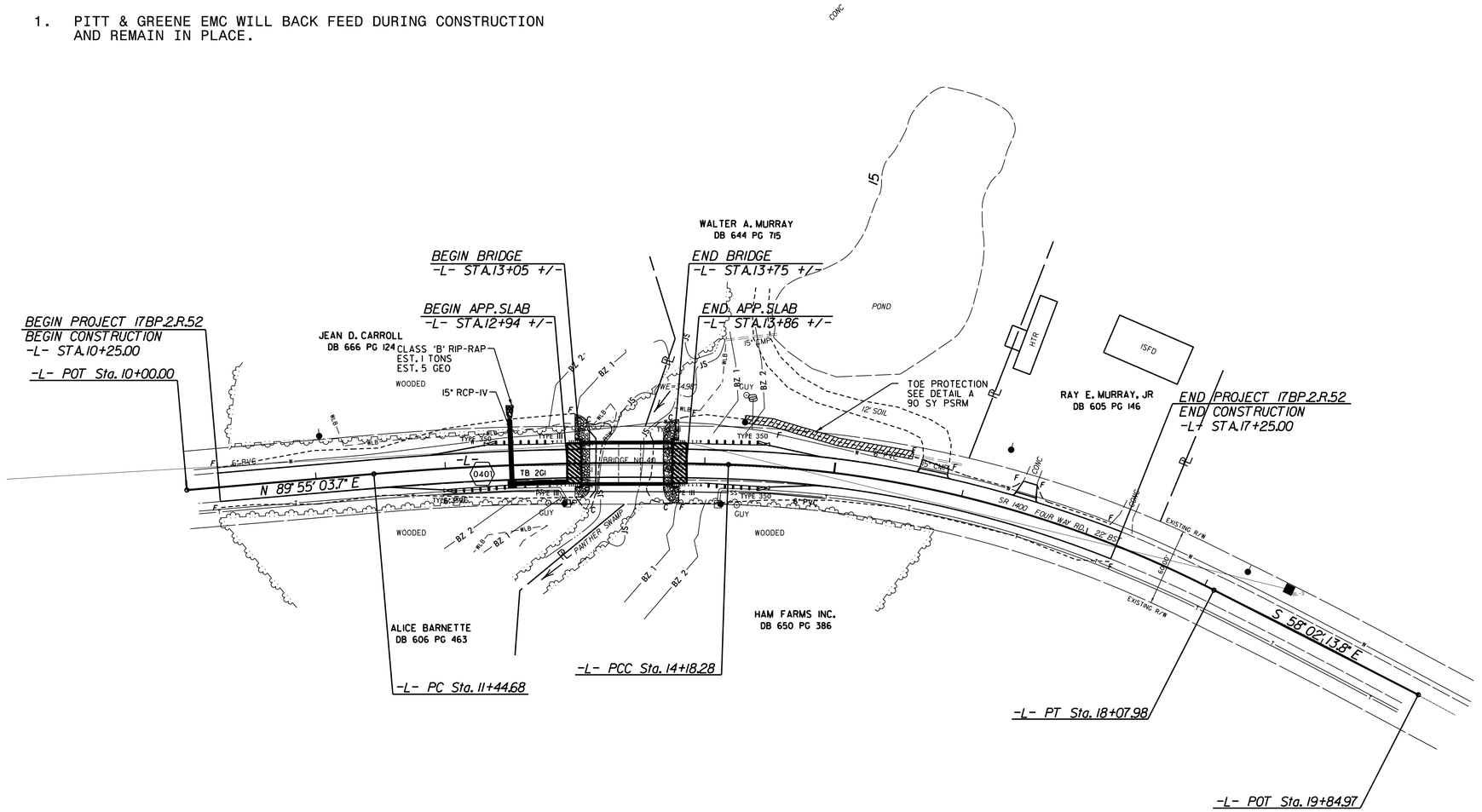

5/14/99

10/3/2013
014\13400\Greene 40\Utilities\Rdy_Ut\Proj\390040_UO-02_psh.dgn
10:58:44 AM