09/08/99

TIP PROJECT: B-5418

See Sheet 1-A For Index of Sheets

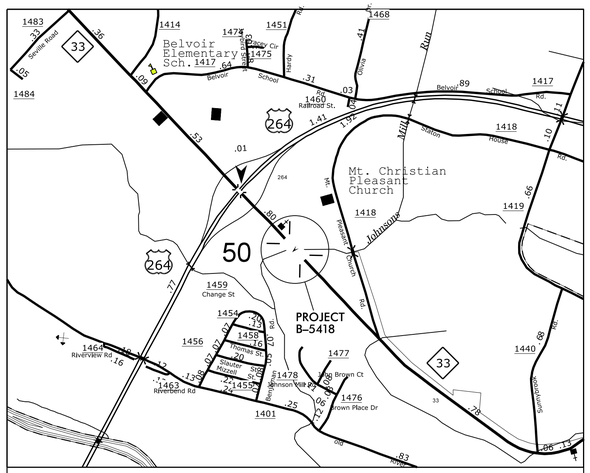

VICINITY MAP
(NOT TO SCALE)

STATE OF NORTH CAROLINA
DIVISION OF HIGHWAYS

PITT COUNTY

STATE	STATE PROJECT REFERENCE NO.	SHEET NO.	TOTAL SHEETS
N.C.	B-5418	1	

STATE PROJ. NO.	F. A. PROJ. NO.	DESCRIPTION
45479.1.1	BRSTP-0033(9)	PE
45479.2.1	BRSTP-0033(9)	RW
45479.3.1	BRSTP-0033(9)	CONST

LOCATION: BRIDGE NO. 50 OVER JOHNSON MILL RUN ON NC HWY 33

TYPE OF WORK: BRIDGE REPLACEMENT, GUARDRAIL, PAVING, GRADING AND DRAINAGE

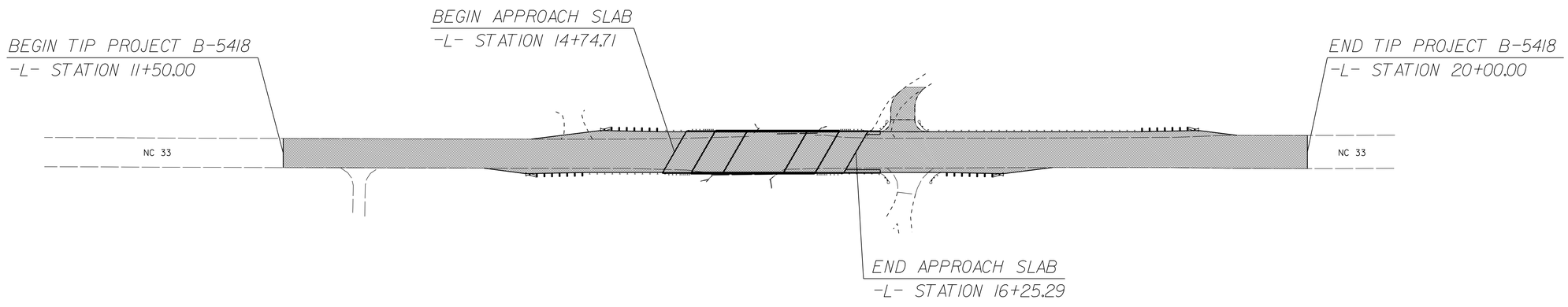

REVISED 11/04/2013: LET DATE CHANGED TO JANUARY 2014

05-NOV-2013 11:10
G:\PROJECTS\PITT\Pitt #50\PITT50_DDC2_PSH_1.DGN
$$$$USERNAME$$$$

GRAPHIC SCALES

50 25 0 50 100
PLANS

50 25 0 50 100
PROFILE (HORIZONTAL)

10 5 0 10 20
PROFILE (VERTICAL)

PROJECT LENGTH

LENGTH ROADWAY TIP PROJECT B-5418 = 0.133 MILE
LENGTH STRUCTURE TIP PROJECT B-5418 = 0.028 MILE
TOTAL LENGTH TIP PROJECT B-5418 = 0.161 MILE

Prepared in the Office of:
DIVISION OF HIGHWAYS
1000 Birch Ridge Dr., Raleigh NC, 27610

2012 STANDARD SPECIFICATIONS

RIGHT OF WAY DATE:

LETTING DATE:
JANUARY 2014

DWAYNE H. ALLIGOOD
PROJECT ENGINEER

LANG JONES
PROJECT DESIGN ENGINEER

HYDRAULICS ENGINEER

NORTH CAROLINA PROFESSIONAL SEAL 16710 ENGINEER DWAYNE H. ALLIGOOD

Dwayne H. Alligood P.E.
SIGNATURE: 11/05/2013

ROADWAY DESIGN ENGINEER

NORTH CAROLINA PROFESSIONAL SEAL 16710 ENGINEER DWAYNE H. ALLIGOOD

Dwayne H. Alligood P.E.
SIGNATURE: 11/05/2013

STATE OF NORTH CAROLINA DEPARTMENT OF TRANSPORTATION

PROJECT REFERENCE NO.	SHEET NO.
B-5418	1A

INDEX OF SHEETS

1	TITLE SHEET
1A	INDEX OF SHEETS, GENERAL NOTES, STANDARD DRAWINGS
1B	CONVENTIONAL SYMBOLS
2	TYPICAL SECTIONS
3	SUMMARY OF QUANTITIES
3A	SUMMARY OF DRAINAGE, GUARDRAIL AND EARTHWORK QUANTITIES
4	PLAN AND PROFILE SHEET
4A	RIGHT OF WAY SHEET
TMP1-TMP2	TRAFFIC MANAGEMENT PLANS
EC1-EC3	EROSION CONTROL SHEETS
UC1-UC4	UTILITY CONSTRUCTION SHEETS
UO1-UO2	UTILITY BY OTHERS SHEETS
X1A	CROSS-SECTION SUMMARY
X1-X2	CROSS-SECTIONS
S1-S19	STRUCTURE PLANS (BRIDGE)

2012 ROADWAY ENGLISH STANDARD DRAWINGS

The following Roadway Standards as appear in "Roadway Standard Drawings" Highway Design Branch - N. C. Department of Transportation - Raleigh, N. C., Dated January, 2012 are applicable to this projectand by reference hereby are considered a part of these plans:

STD.NO.	TITLE
DIVISION 2 - EARTHWORK	
200.02	Method of Clearing - Method II
225.02	Guide for Grading Subgrade - Secondary and Local
225.04	Method of Obtaining Superelevation - Two Lane Pavement
DIVISION 3 - PIPE CULVERTS	
300.01	Method of Pipe Installation
DIVISION 4 - MAJOR STRUCTURES	
422.10	Reinforced Bridge Approach Fills
DIVISION 5 - SUBGRADE, BASES AND SHOULDERS	
560.01	Method of Shoulder Construction - High Side of Superelevated Curve - Method I
DIVISION 8 - INCIDENTALS	
815.03	Pipe Underdrain and Blind Drain
840.00	Concrete Base Pad for Drainage Structures
840.29	Frames and Narrow Slot Flat Grates
840.35	Traffic Bearing Grated Drop Inlet
840.45	Precast Drainage Structure
840.66	Drainage Structure Steps
862.01	Guardrail Placement
862.02	Guardrail Installation
862.03	Structure Anchor Units
876.02	Guide for Rip Rap at Pipe Outlets

GENERAL NOTES:

2012 SPECIFICATIONS
EFFECTIVE: 01-17-2012
REVISED: 07/30/2012

GRADE LINE:
GRADING AND SURFACING:

THE GRADE LINES SHOWN DENOTE THE FINISHED ELEVATION OF THE PROPOSED SURFACING AT GRADE POINTS SHOWN ON THE TYPICAL SECTIONS. GRADE LINES MAY BE ADJUSTED AT THEIR BEGINNING AND ENDING AND AT STRUCTURES AS DIRECTED BY THE ENGINEER IN ORDER TO SECURE A PROPER TIE-IN.

CLEARING:

CLEARING ON THIS PROJECT SHALL BE PERFORMED TO THE LIMITS ESTABLISHED BY METHOD II.

SUPERELEVATION:

ALL CURVES ON THIS PROJECT SHALL BE SUPERELEVATED IN ACCORDANCE WITH STD. NO. 225.04 USING THE RATE OF SUPERELEVATION AND RUNOFF SHOWN ON THE PLANS. SUPERELEVATION IS TO BE REVOLVED ABOUT THE GRADE POINTS SHOWN ON THE TYPICAL SECTIONS.

SHOULDER CONSTRUCTION:

ASPHALT, EARTH, AND CONCRETE SHOULDER CONSTRUCTION ON THE HIGH SIDE OF SUPERELEVATED CURVES SHALL BE IN ACCORDANCE WITH STD. NO. 560.01.

UNDERDRAINS:

UNDERDRAINS SHALL BE CONSTRUCTED IN ACCORDANCE WITH STD. NO. 815.03 AT LOCATIONS DIRECTED BY ENGINEER.

DRIVEWAYS:

DRIVEWAYS SHALL BE CONSTRUCTED IN ACCORDANCE WITH STD. 848.02 USING 3' RADII OR RADII AS SHOWN ON THE PLANS. LOCATIONS OF DRIVES WILL BE AS SHOWN ON THE PLANS OR AS DIRECTED BY THE ENGINEER.

GUARDRAIL:

THE GUARDRAIL LOCATIONS SHOWN ON THE PLANS MAY BE ADJUSTED DURING CONSTRUCTION AS DIRECTED BY THE ENGINEER. THE CONTRACTOR SHOULD CONSULT WITH THE ENGINEER PRIOR TO ORDERING GUARDRAIL MATERIAL.

END BENTS:

THE ENGINEER SHALL CHECK THE STRUCTURE END BENT PLANS, DETAILS, AND CROSS-SECTION PRIOR TO SETTING OF THE SLOPE STAKES FOR THE EMBANKMENT OR EXCAVATION APPROACHING A BRIDGE.

UTILITIES:

ANY RELOCATION OF EXISTING UTILITIES WILL BE ACCOMPLISHED BY OTHERS, EXCEPT AS SHOWN ON THE PLANS.

RIGHT-OF-WAY MARKERS:

ALL RIGHT-OF-WAY MARKERS ON THIS PROJECT SHALL BE PLACED BY OTHERS.

05-NOV-2013 11:11
G:\PROJECTS\PITT\Pitt #50\PITT50_DDC2_PSH_1A.dgn
$$$$USERNAME$$$$

PROJECT REFERENCE NO.	SHEET NO.
B-5418	1B

Note: Not to Scale

****S.U.E. = Subsurface Utility Engineering***

STATE OF NORTH CAROLINA
DIVISION OF HIGHWAYS

CONVENTIONAL PLAN SHEET SYMBOLS

BOUNDARIES AND PROPERTY:

- State Line
- County Line
- Township Line
- City Line
- Reservation Line
- Property Line
- Existing Iron Pin — EIP
- Property Corner
- Property Monument — ECM
- Parcel/Sequence Number — 123
- Existing Fence Line
- Proposed Woven Wire Fence
- Proposed Chain Link Fence
- Proposed Barbed Wire Fence
- Existing Wetland Boundary — WLB
- Proposed Wetland Boundary — WLB
- Existing Endangered Animal Boundary — EAB
- Existing Endangered Plant Boundary — EPB

BUILDINGS AND OTHER CULTURE:

- Gas Pump Vent or U/G Tank Cap
- Sign — S
- Well — W
- Small Mine
- Foundation
- Area Outline
- Cemetery
- Building
- School
- Church
- Dam

HYDROLOGY:

- Stream or Body of Water
- Hydro, Pool or Reservoir
- Jurisdictional Stream — JS
- Buffer Zone 1 — BZ 1
- Buffer Zone 2 — BZ 2
- Flow Arrow
- Disappearing Stream
- Spring
- Wetland
- Proposed Lateral, Tail, Head Ditch — FLOW
- False Sump

RAILROADS:

- Standard Gauge — CSX TRANSPORTATION
- RR Signal Milepost — MILEPOST 35
- Switch — SWITCH
- RR Abandoned
- RR Dismantled

RIGHT OF WAY:

- Baseline Control Point
- Existing Right of Way Marker
- Existing Right of Way Line
- Proposed Right of Way Line — RW
- Proposed Right of Way Line with Iron Pin and Cap Marker — RW
- Proposed Right of Way Line with Concrete or Granite Marker — RW
- Existing Control of Access — CA
- Proposed Control of Access — CA
- Existing Easement Line — E
- Proposed Temporary Construction Easement — E
- Proposed Temporary Drainage Easement — TDE
- Proposed Permanent Drainage Easement — PDE
- Proposed Permanent Utility Easement — PUE
- Proposed Temporary Utility Easement — TUE
- Proposed Permanent Easement with Iron Pin and Cap Marker

ROADS AND RELATED FEATURES:

- Existing Edge of Pavement
- Existing Curb
- Proposed Slope Stakes Cut — C
- Proposed Slope Stakes Fill — F
- Proposed Wheel Chair Ramp — WCR
- Existing Metal Guardrail
- Proposed Guardrail
- Existing Cable Guiderail
- Proposed Cable Guiderail
- Equality Symbol
- Pavement Removal

VEGETATION:

- Single Tree
- Single Shrub
- Hedge
- Woods Line
- Orchard
- Vineyard — Vineyard

EXISTING STRUCTURES:

MAJOR:

- Bridge, Tunnel or Box Culvert — CONC
- Bridge Wing Wall, Head Wall and End Wall — CONC WW

MINOR:

- Head and End Wall — CONC HW
- Pipe Culvert
- Footbridge
- Drainage Box: Catch Basin, DI or JB — CB
- Paved Ditch Gutter
- Storm Sewer Manhole — S
- Storm Sewer — S

UTILITIES:

POWER:

- Existing Power Pole
- Proposed Power Pole
- Existing Joint Use Pole
- Proposed Joint Use Pole
- Power Manhole — P
- Power Line Tower
- Power Transformer
- U/G Power Cable Hand Hole — HH
- H-Frame Pole
- Recorded U/G Power Line — P
- Designated U/G Power Line (S.U.E.*) — P

TELEPHONE:

- Existing Telephone Pole
- Proposed Telephone Pole
- Telephone Manhole — T
- Telephone Booth
- Telephone Pedestal — T
- Telephone Cell Tower
- U/G Telephone Cable Hand Hole — HH
- Recorded U/G Telephone Cable — T
- Designated U/G Telephone Cable (S.U.E.*) — T
- Recorded U/G Telephone Conduit — TC
- Designated U/G Telephone Conduit (S.U.E.*) — TC
- Recorded U/G Fiber Optics Cable — T FO
- Designated U/G Fiber Optics Cable (S.U.E.*) — T FO

WATER:

- Water Manhole — W
- Water Meter
- Water Valve
- Water Hydrant
- Recorded U/G Water Line — W
- Designated U/G Water Line (S.U.E.*) — W
- Above Ground Water Line — A/G Water

TV:

- TV Satellite Dish
- TV Pedestal — C
- TV Tower
- U/G TV Cable Hand Hole — HH
- Recorded U/G TV Cable — TV
- Designated U/G TV Cable (S.U.E.*) — TV
- Recorded U/G Fiber Optic Cable — TV FO
- Designated U/G Fiber Optic Cable (S.U.E.*) — TV FO

GAS:

- Gas Valve
- Gas Meter
- Recorded U/G Gas Line — G
- Designated U/G Gas Line (S.U.E.*) — G
- Above Ground Gas Line — A/G Gas

SANITARY SEWER:

- Sanitary Sewer Manhole
- Sanitary Sewer Cleanout
- U/G Sanitary Sewer Line — SS
- Above Ground Sanitary Sewer — A/G Sanitary Sewer
- Recorded SS Forced Main Line — FSS
- Designated SS Forced Main Line (S.U.E.*) — FSS

MISCELLANEOUS:

- Utility Pole
- Utility Pole with Base
- Utility Located Object
- Utility Traffic Signal Box — S
- Utility Unknown U/G Line — ?UTL
- U/G Tank; Water, Gas, Oil
- A/G Tank; Water, Gas, Oil
- U/G Test Hole (S.U.E.*)
- Abandoned According to Utility Records — AATUR
- End of Information — E.O.I.

8/15/08
05-NOV-2013 11:41
C:\Users\ttippett\AppData\Local\Temp\ttp50\PITT50_DDC2_PSH_1B.DGN
$$$$USERNAME$$$$

PROJECT REFERENCE NO.	SHEET NO.
B-5418	2
R/W SHEET NO.	
ROADWAY DESIGN ENGINEER	PAVEMENT DESIGN ENGINEER

NORTH CAROLINA PROFESSIONAL SEAL 16710 ENGINEER DWAYNE H. ALLIGOOD 10/11/2013

C1	PROP. APPROX. 3" ASPHALT CONCRETE SURFACE COURSE, TYPE S9.5B, AT AN AVERAGE RATE OF 336 LBS. PER SQ.YD. IN EACH OF TWO LAYERS.
D1	PROP. APPROX. 3" ASPHALT CONCRETE INTERMEDIATE COURSE, TYPE I19.0B, AT AN AVERAGE RATE OF 342 LBS. PER SQ. YD.
D2	PROPOSED VARIABLE DEPTH ASPHALT CONCRETE INTERMEDIATE COURSE, TYPE I19.0B, TO BE PLACED IN LAYERS NOT LESS THAN 2.5" OR GREATER THAN 4" IN DEPTH.
E1	PROP. APPROX. 4" ASPHALT CONCRETE BASE COURSE, TYPE B25.0B, AT AN AVERAGE RATE OF 456 LBS. PER SQ. YD.
T	EARTH MATERIAL.
U	EXISTING PAVEMENT.
U1	CONCRETE CORED SLABS

NOTE: PAVEMENT EDGE SLOPES ARE 1:1 UNLESS SHOWN OTHERWISE.

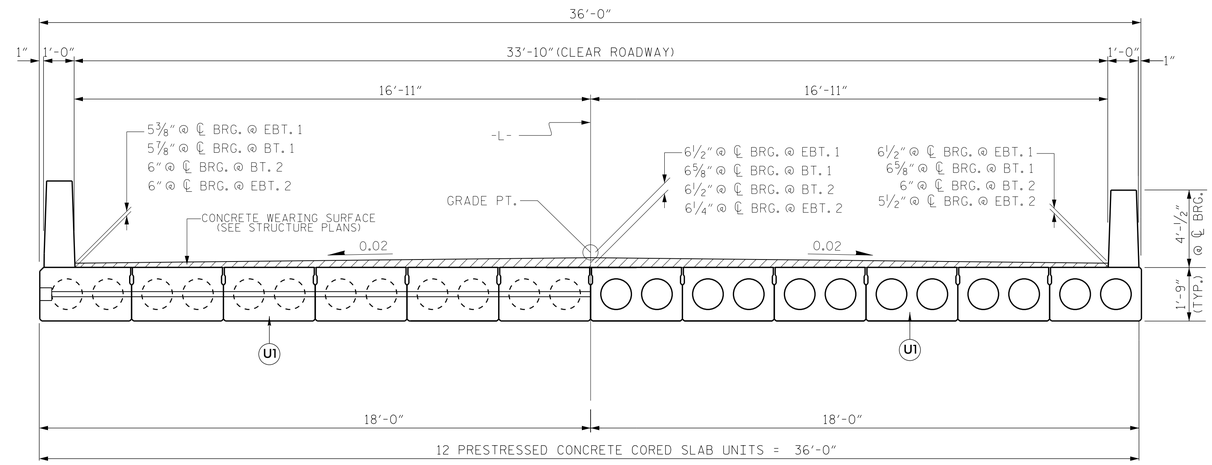

TYPICAL BRIDGE SECTION (NTS)

-L- STA 14+98.56 TO -L- STA 16+01.44

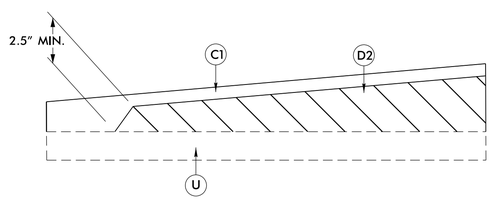

WEDGING DETAIL

NOT TO SCALE

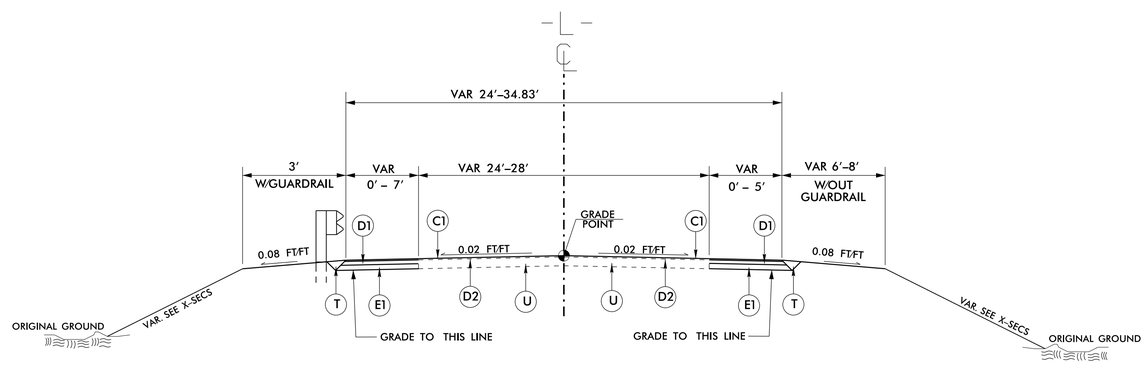

USE TYPICAL SECTION #1 (NTS)

-L- 11+50.00 - 14+74.71

-L- 16+45.50 - 20+00.00

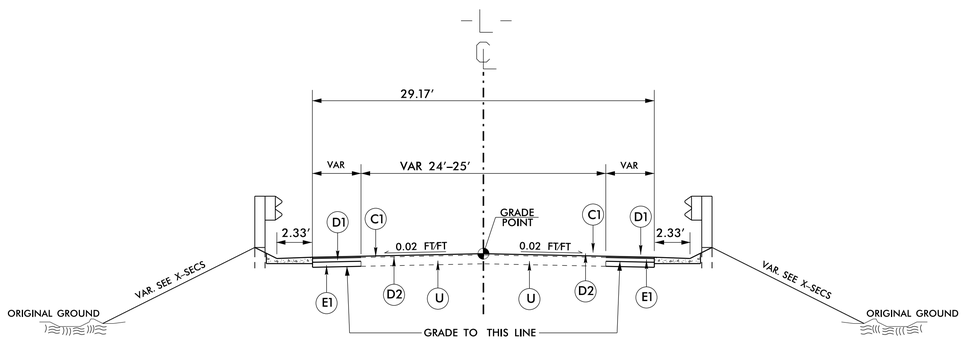

USE TYPICAL SECTION #2 (NTS)

-L- 16+25.29 - 16+45.50

REVISIONS

8/17/99

05-NOV-2013 11:11
C:\PROJECTS\PITT\Pitt #50\PITT50_DDC2_PSH_2.DGN
$$$$USERNAME$$$$

STATE OF NORTH CAROLINA
DIVISION OF HIGHWAYS
SUMMARY OF QUANTITIES

ITEM	SECT	QUANTITY	UNIT	ITEM DESCRIPTION
1	800	1	LS	MOBILIZATION
2	801	1	LS	CONSTRUCTION SURVEYING
3	SP	1	LS	REINFORCED BRIDGE APPROACH FILL, -L- STA 14+83.20
4	226	1	LS	GRADING
5	226	200	CY	UNDERCUT EXCAVATION
6	300	20	TON	FOUNDATION CONDITIONING MATERIAL, MINOR STRUCTURES
7	300	70	SY	FOUNDATION CONDITIONING GEOTEXTILE
8	305	100	LF	15" DRAINAGE PIPE
9	305	56	LF	18" DRAINAGE PIPE
10	310	30	LF	15" R.C. PIPE CULVERTS, CLASS IV
11	610	100	TON	ASPHALT CONCRETE BASE COURSE, TYPE B25.0B
12	610	310	TON	ASPHALT CONCRETE INTERMEDIATE COURSE, TYPE I19.0B
13	610	430	TON	ASPHALT CONCRETE SURFACE COURSE, TYPE S9.5B
14	620	50	TON	ASPHALT BINDER FOR PLANT MIX
15	840	2	EA	MASONRY DRAINAGE STRUCTURES
16	840	2	EA	FRAME WITH GRATE, STD 840.29
17	846	42	LF	SHOULDER BERM GUTTER
18	862	310	LF	STEEL BEAM GUARDRAIL
19	862	36	LF	STEEL BEAM GUARDRAIL, SHOP CURVED
20	862	10	EA	ADDITIONAL GUARDRAIL POSTS
21	862	4	EA	GUARDRAIL ANCHOR UNITS, TYPE III
22	862	4	EA	GUARDRAIL ANCHOR UNITS, TYPE 350
23	862	4	EA	GUARDRAIL ANCHOR UNITS, TYPE CAT-1
24	876	140	TON	RIP RAP, CLASS I
25	876	5	TON	RIP RAP, CLASS B
26	876	202	SY	GEOTEXTILE FOR DRAINAGE
27	1605	1200	LF	TEMPORARY SILT FENCE
28	1610	5	TON	STONE FOR EROSION CONTROL, CLASS B
29	1610	5	TON	SEDIMENT CONTROL STONE
30	1615	1	ACRE	TEMPORARY MULCHING
31	1620	50	LB	SEED FOR TEMPORARY SEEDING
32	1620	0.2	TON	FERTILIZER FOR TEMPORARY SEEDING
33	1622	200	LF	TEMPORARY SLOPE DRAINS
34	SP	400	LF	SAFETY FENCE
35	1630	5	CY	SILT EXCAVATION
36	1631	1040	SY	MATTING FOR EROSION CONTROL
37	1632	80	LF	1/4" HARDWARE CLOTH
38	SP	100	SY	FLOATING TURBIDITY CURTAIN
39	SP	250	LF	WATTLE
40	SP	5	LB	POLYACRYLAMIDE (PAM)
41	1660	1	ACRE	SEEDING AND MULCHING
42	1661	50	LB	SEED FOR REPAIR SEEDING
43	1661	0.2	TON	FERTILIZER FOR REPAIR SEEDING
44	SP	1	LS	RELOCATE 8" WATER MAIN
45	402	1	LS	REMOVAL OF EXISTING STRUCTURE AT -L- STA 15+50.00
46	450	2	EA	PDA TESTING
47	412	1	LS	UNCLASSIFIED STRUCTURE EXCAVATION AT -L- STA 15+50.00
48	SP	3393	SF	CONCRETE WEARING SURFACE
49	420	4566	SF	GROOVING BRIDGE FLOOR
50	420	66.6	CY	CLASS A CONCRETE (BRIDGE)
51	422	1	LS	BRIDGE APPROACH SLABS AT STA 14+83.20
52	425	11034	LB	REINFORCING STEEL (BRIDGE)
53	450	980	LF	HP 12 X 53 STEEL PILES
54	450	1360	LF	HP 14 X 73 GALVANIZED STEEL PILES
55	460	16	EA	PILE REDRIVES
56	SP	200.58	LF	VERTICAL CONCRETE BARRIER RAIL
57	876	251	TON	RIP RAP, CLASS II (2'-0" THICK)
58	876	279	SY	GEOTEXTILE FOR DRAINAGE
59	430	1	LS	ELASTOMETRIC BEARINGS
60	430	1200	LF	3'-0" X 1'-9" PRESTRESSED CONCRETE CORED SLABS

REVISIONS

8/17/99

05-NOV-2013 11:11
C:\PROJECTS\TTP\Pitt #50\PITT50_DDC2_PSH_3.DGN
$$$$USERNAME$$$$

COMPUTED BY: VT DATE: 3-15-11
CHECKED BY: LJ DATE: 3-15-11

STATE OF NORTH CAROLINA
DIVISION OF HIGHWAYS

PROJECT REFERENCE NO.	SHEET NO.
B-5418	3A

NOTE: Invert Elevations are for Bid Purposes only and shall not be used for project construction stakeout.
See "Standard Specifications For Roads and Structures, Section 300-5".

LIST OF PIPES, ENDWALLS, ETC. (FOR PIPES 48" & UNDER)

| STATION / SIZE / THICKNESS OR GAUGE | LOCATION (LT,RT, OR CL) | STRUCTURE NO. FROM | STRUCTURE NO. TO | TOP ELEVATION | INVERT ELEVATION | INVERT ELEVATION | SLOPE CRITICAL | DRAINAGE PIPE (RCP, CSP, CAAP, HDPE, or PVC) 12" | 15" | 18" | 24" | 30" | 36" | 42" | 48" | DO NOT USE RCP | DO NOT USE CSP | DO NOT USE CAAP | DO NOT USE HDPE | CORRUGATED ALUMINUM PIPE 12" .064 | 15" .064 | 18" .064 | 24" .064 | 36" .079 | 42" .109 | 48" .109 | R.C. PIPE (CLASS III) 15" | 18" | 24" | 30" | 36" | 42" | 48" | R.C. PIPE (CLASS IV) 12" | 15" | 18" | 24" | 30" | 36" | 42" | 48" | *** R. C. PIPE (CLASS V) | *** R. C. PIPE CULVERTS, CONTRACTOR DESIGN PIPE | *** R. C. PIPE CULVERTS, CONTRACTOR DESIGN PIPE | 15" SIDE DRAIN PIPE | 18" SIDE DRAIN PIPE | ENDWALLS STD. 838.01, STD. 838.11 OR STD. 838.80 (UNLESS NOTED OTHERWISE) CU. YDS. R.C.P. | C.S.P. | QUANTITIES FOR DRAINAGE STRUCTURES PER EACH (0' THRU 5.0') | * TOTAL L.F. FOR PAY QUANTITY SHALL BE COL. 'A' + (1.3 X COL. 'B') LIN. FT. A 5.0' THRU 10.0' | B 10.0' AND ABOVE | C.B. STD. 840.01 OR STD. 840.02 | FRAME, GRATES AND HOOD STANDARD 840.03 TYPE OF GRATE E | F | G | CONCRETE TRANSITIONAL SECTION CATCH BASIN | DROP INLET | G.D.I. FRAME WITH GRATE STD. 840.22 | G.D.I. FRAME WITH TWO GRATES STD. 840.22 | G.D.I. (N.S.) FRAME WITH GRATE STD. 840.29 | G.D.I. (N.S.) FRAME WITH TWO GRATES STD. 840.24 | T.B.D.I. STD. 840.35 | CORR. STEEL ELBOWS NO. & SIZE | CONC. COLLARS CL. "B" C.Y. STD. 840.72 | CONC. & BRICK PIPE PLUG, C.Y. STD. 840.71 | PIPE REMOVAL LIN.FT. | REMARKS |
|---|---|---

PROJECT REFERENCE NO.	SHEET NO.
B-5418	4
R/W SHEET NO.	
ROADWAY DESIGN ENGINEER	HYDRAULICS ENGINEER

NORTH CAROLINA PROFESSIONAL SEAL 16710 ENGINEER DWAINE H. ALLIGOOD 10/11/2013

NORTH CAROLINA PROFESSIONAL SEAL 16710 ENGINEER DWAINE H. ALLIGOOD 10/11/2013

DATUM DESCRIPTION

THE LOCALIZED COORDINATE SYSTEM DEVELOPED FOR THIS PROJECT IS BASED ON THE STATE PLANE COORDINATES ESTABLISHED BY NCDOT FOR MONUMENT "CONTROL POINT 2"
WITH NAD 83/NSRS 2007 STATE PLANE GRID COORDINATES OF
NORTHING: 697808.0070(ft) EASTING: 2472977.5210(ft)
ELEVATION: 27.757(ft)
THE AVERAGE COMBINED GRID FACTOR USED ON THIS PROJECT (GROUND TO GRID) IS: 0.9999017928
THE N.C. LAMBERT GRID BEARING AND LOCALIZED HORIZONTAL GROUND DISTANCE FROM "CONTROL POINT 2" TO -L- STATION 10+00 IS
S45°28'01"E 533.0426'
ALL LINEAR DIMENSIONS ARE LOCALIZED HORIZONTAL DISTANCES
VERTICAL DATUM USED IS NAVD 88

NAD 83/NSRS 2007

50 25 0 50 100
PLANS

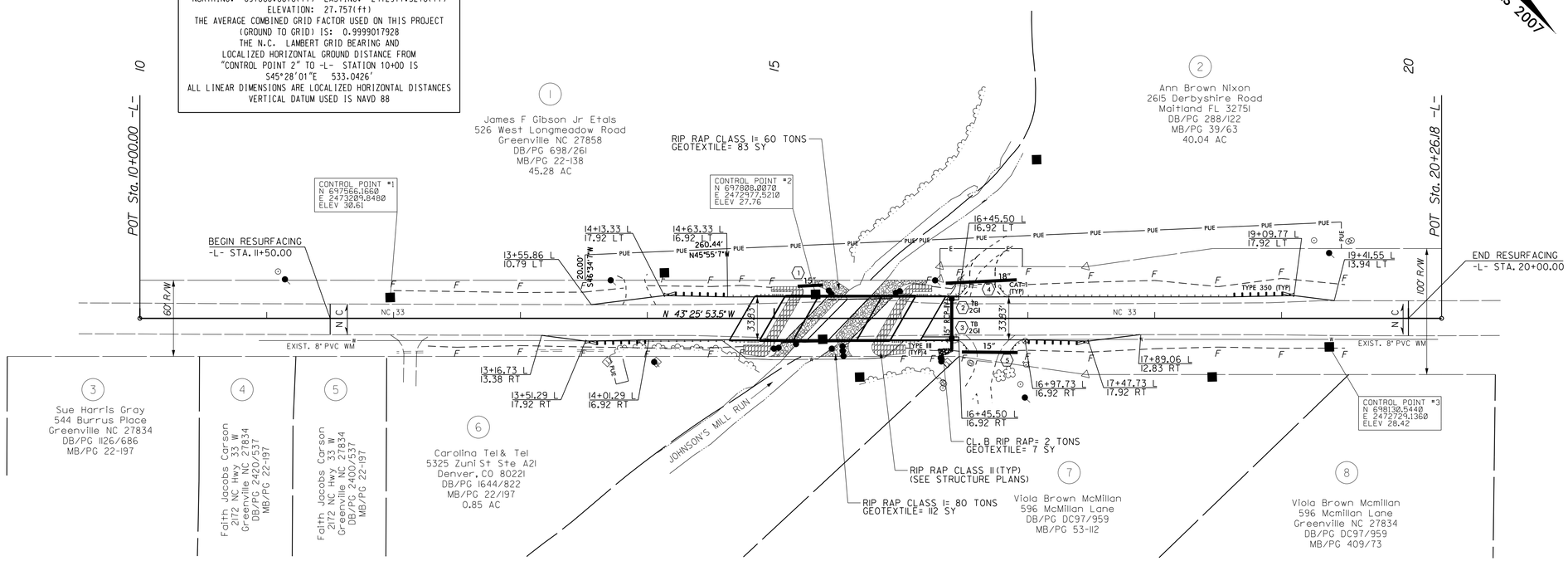

SHOULDER BERM GUTTER
-L- STA 16+33.71 - 16+45.50 LT
-L- STA 16+15.14 - 16+45.50 RT

WORK POINT DESCRIPTION	
WORK POINT #1	-L- STATION 14+98.56 CL
WORK POINT #2	-L- STATION 15+24.93 CL
WORK POINT #3	-L- STATION 15+75.07 CL
WORK POINT #4	-L- STATION 16+01.44 CL

-L- PROFILE

SCALE: 1" = 50' HORIZ.
1" = 10' VERT.

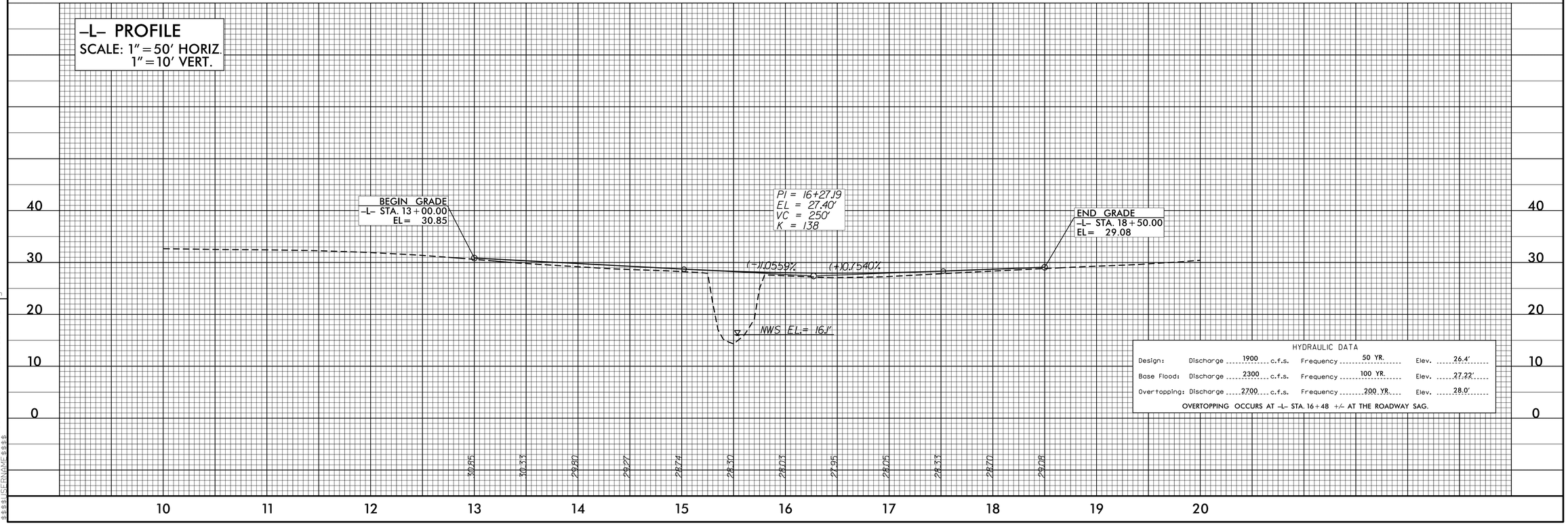

HYDRAULIC DATA						
Design:	Discharge	1900 c.f.s.	Frequency	50 YR.	Elev.	26.4'
Base Flood:	Discharge	2300 c.f.s.	Frequency	100 YR.	Elev.	27.22'
Overtopping:	Discharge	2700 c.f.s.	Frequency	200 YR.	Elev.	28.0'

OVERTOPPING OCCURS AT -L- STA. 16+48 +/- AT THE ROADWAY SAG.

REVISIONS

8/17/99

05-NOV-2013 11:11 T:\Proj "60\PITT50_DDC2_PSH_4.dgn
$$$$USERNAME$$$$

PROJECT REFERENCE NO.	SHEET NO.
B-5418	4A
R/W SHEET NO.	
ROADWAY DESIGN ENGINEER	HYDRAULICS ENGINEER

NORTH CAROLINA PROFESSIONAL SEAL 16710 ENGINEER DWAYNE H. ALLIGOOD 10/11/2013

NORTH CAROLINA PROFESSIONAL SEAL 16710 ENGINEER DWAYNE H. ALLIGOOD 10/11/2013

NAD 83/NSRS 2007

40 20 0 40 80
PLANS

RIGHT OF WAY AREA SUMMARY

PARCEL NO.	PROPERTY OWNER NAME	LOCATION	TOTAL PARCEL AREA [ACRES]	AREA TO BE DEDICATED (CONST. EASEMENT) [ACRES]	AREA TO BE PURCHASED (P.U.E.) [ACRES]	PARCEL AREA REMAINING [ACRES]
1	JAMES F. GIBSON JR ETALS	LT	45.28		0.140	45.14
2	ANN BROWN NIXON	LT	40.04	0.021	0.184	39.86
6	CAROLINA TEL & TEL	RT	0.85		0.005	0.845

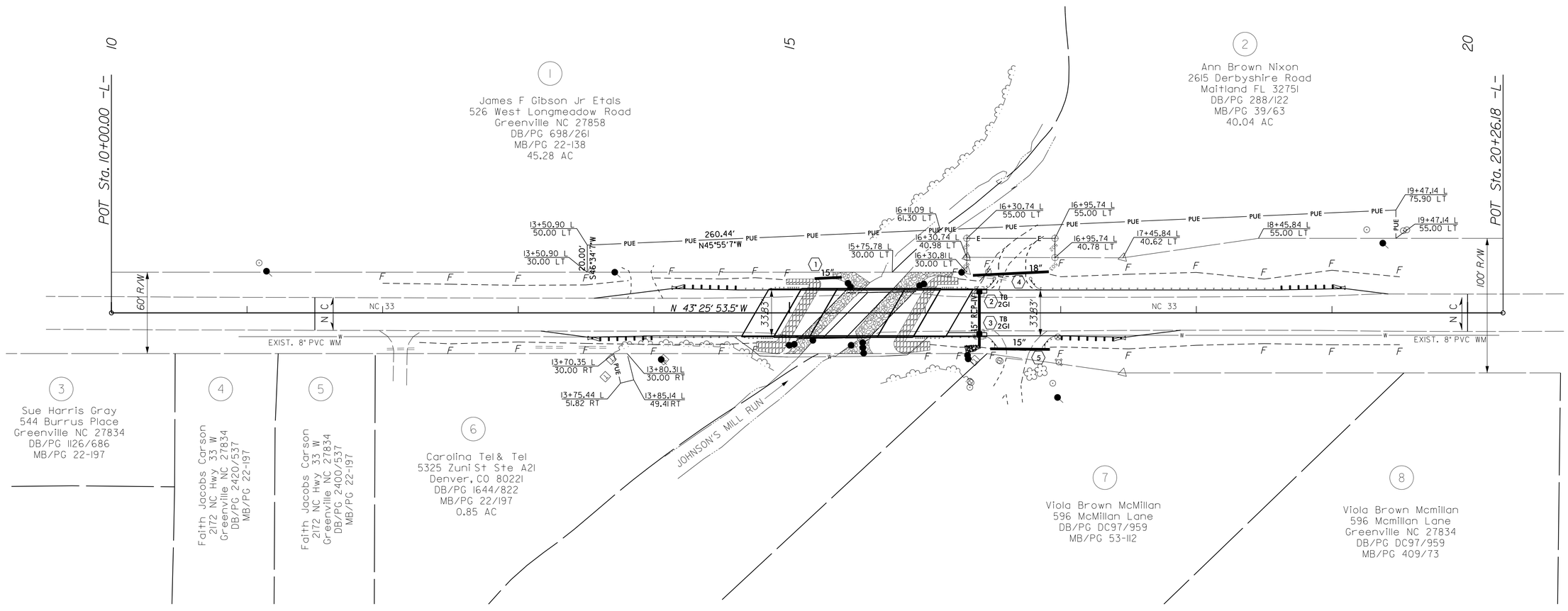

REVISIONS

8/17/99

05-NOV-2013 11:11
C:\PROJECTS\PITT\Pitt #50\PITT50_DDC2_PSH_4A.dgn
$$$$USERNAME$$$$

STATE OF NORTH CAROLINA
DIVISION OF HIGHWAYS

TRANSPORTATION MANAGEMENT PLAN

PITT COUNTY

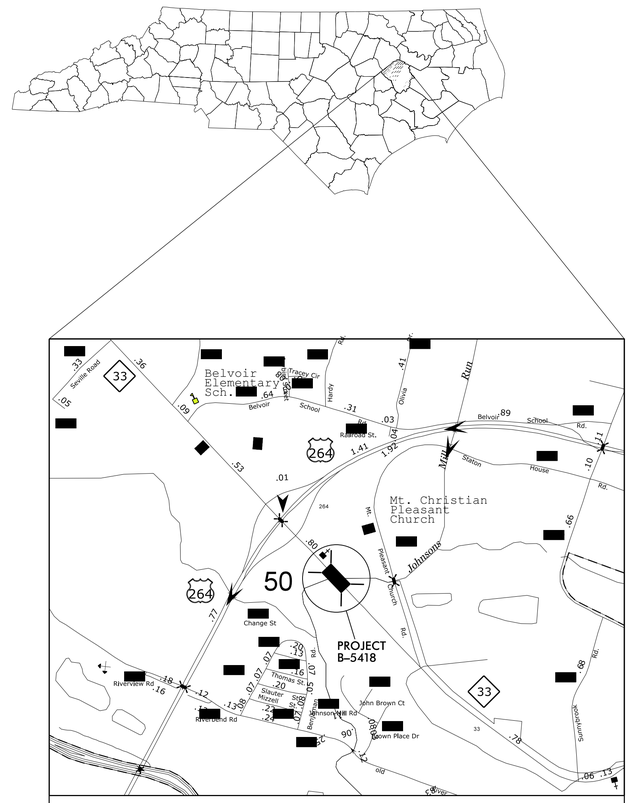

VICINITY MAP
(NOT TO SCALE)

INDEX OF SHEETS

SHEET NO.	TITLE
TMP-1	TITLE SHEET WITH VICINITY MAP & INDEX OF SHEETS, LIST OF APPLICABLE ROADWAY STANDARD DRAWINGS, AND LEGEND.
TMP-2	PROJECT NOTES, DETOUR AND PLANS.

LEGEND

GENERAL

- DIRECTION OF TRAFFIC FLOW
- DIRECTION OF PEDESTRIAN TRAFFIC FLOW
- NORTH ARROW
- PROPOSED PVMT.
- EXIST. PVMT.
- WORK AREA

TRAFFIC CONTROL DEVICES

- BARRICADE (TYPE III)

SHEET NO.
TMP-1

B-5418

TIP PROJECT:

WORK ZONE SAFETY & MOBILITY
"from the MOUNTAINS to the COAST"

N.C.D.O.T. WORK ZONE TRAFFIC CONTROL
P.O. BOX 1587, GREENVILLE, NC 27835
105 PACTOLUS HWY. (NC 33), GREENVILLE, NC 27835
PHONE: (252) 830-3490 FAX: (252) 830-3352

STEVEN HAMILTON, PE — TRAFFIC ENGINEER
D. H. ALLIGOOD, PE — TRAFFIC CONTROL PROJECT ENGINEER
D. H. ALLIGOOD, PE — TRAFFIC CONTROL PROJECT DESIGN ENGINEER
LANG JONES — TRAFFIC CONTROL DESIGN ENGINEER

DIVISION OF HIGHWAYS · STATE OF NORTH CAROLINA · DEPARTMENT OF TRANSPORTATION · WORK ZONE TRAFFIC CONTROL

APPROVED: Dwayne H. Alligood
DATE: 10/11/2013

SEAL

05-NOV-2013 11:11
G:\PROJECTS\PITT\PIT ##50\PITT50_DDC2_PSH_TCP1.DGN
$$$$USERNAME$$$$

PROJ. REFERENCE NO.	SHEET NO.
B-5418	TMP-2

GENERAL NOTES

IMPLEMENT TRAFFIC CONTROL IN ACCORDANCE WITH THE ROADWAY STANDARD DRAWINGS LISTED ON TMP-1.

CHANGES MAY BE REQUIRED WHEN PHYSICAL DIMENSIONS IN THE DETAIL DRAWINGS, STANDARD DETAILS AND ROADWAY DETAILS ARE NOT ATTAINABLE TO MEET FIELD CONDITIONS, OR RESULT IN DUPLICATE, OR UNDESIRED OVERLAPPING OF DEVICES. MODIFICATION MAY INCLUDE: MOVING, SUPPLEMENTING, COVERING OR REMOVAL OF DEVICES, AS DIRECTED BY THE ENGINEER.

STATE FORCES WILL INSTALL AND MAINTAIN THE PROJECT DETOUR AND THE TYPE III BARRICADES AT THE PROJECT LIMITS.
STATE FORCES WILL INSTALL PAINT AND MARKERS ON THE FINISHED PROJECT.
CALL JIM EVANS AT 252-830-3493 FOR COORDINATION.

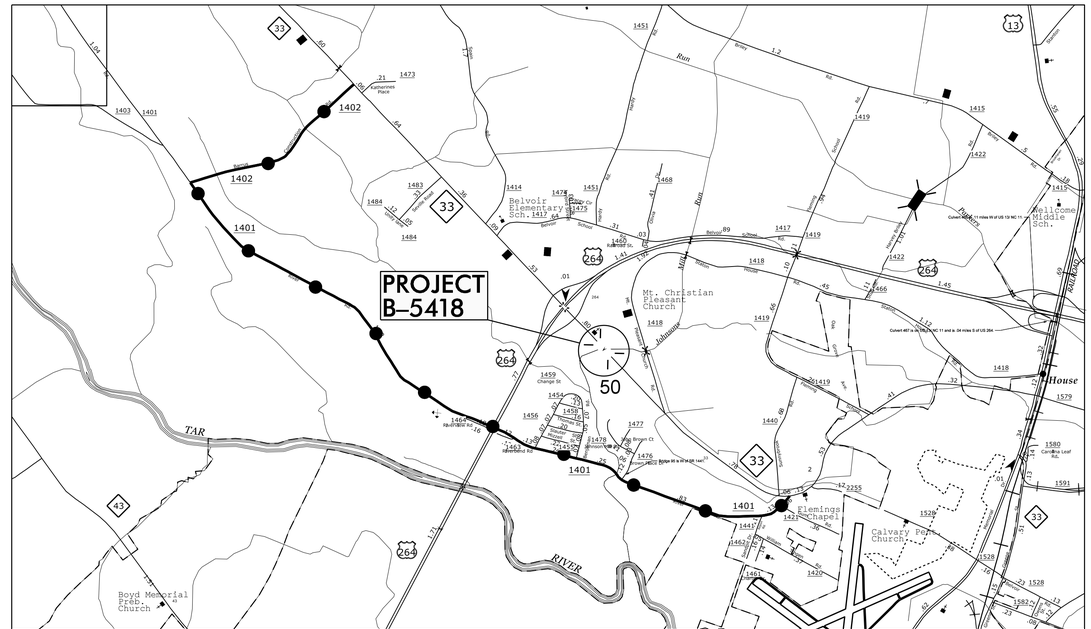

DETOUR MAP
(NOT TO SCALE)

DETOUR ROUTE

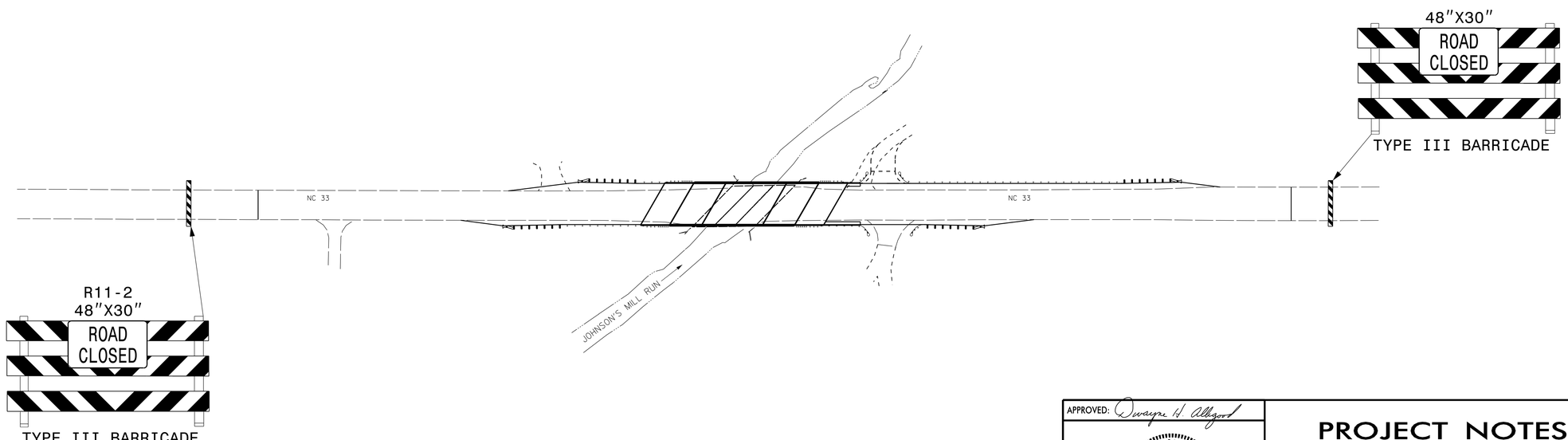

APPROVED: Dwayne H. Alligood

SEAL

NORTH CAROLINA PROFESSIONAL SEAL 16710 ENGINEER DWAYNE H. ALLIGOOD
10/11/2013

PROJECT NOTES

SCALE:	NONE
DATE:	10/03/12
DWG. BY:	LJ
DESIGN BY:	LJ
REVIEWED BY:	TP

REVISIONS

CADD FILE

05-NOV-2013 11:11
G:\PROJECTS\PIT\Pit++ =50\PITT50_DDC2_PSH_TCP2.DGN
$$$$USERNAME$$$$

PROJECT: B-5418

STATE	STATE PROJECT REFERENCE NO.	SHEET NO.	TOTAL SHEETS
N.C.	B-5418	EC-1	

STATE PROJ. NO.	F. A. PROJ. NO.	DESCRIPTION
45479.1.1	BRSTP-0033(9)	PE
45479.2.1	BRSTP-0033(9)	RW
45479.3.1	BRSTP-0033(9)	CONST

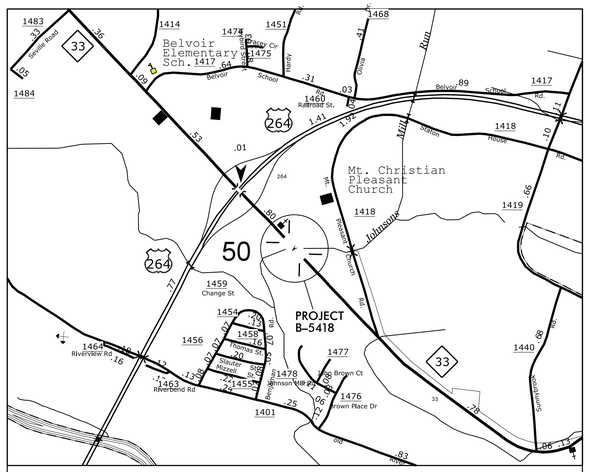

VICINITY MAP
(NOT TO SCALE)

STATE OF NORTH CAROLINA
DIVISION OF HIGHWAYS

PLAN FOR PROPOSED
HIGHWAY EROSION CONTROL

EROSION AND SEDIMENT CONTROL MEASURES

Std. #	Description	Symbol
1630.03	Temporary Silt Ditch	TSD
1630.05	Temporary Diversion	TD
1605.01	Temporary Silt Fence	
1606.01	Special Sediment Control Fence	
1622.01	Temporary Berms and Slope Drains	
1630.02	Silt Basin Type B	
1633.01	Temporary Rock Silt Check Type-A	
	Temporary Rock Silt Check Type-A with Matting and Polyacrylamide (PAM)	
1633.02	Temporary Rock Silt Check Type-B	
	Wattle / Coir Fiber Wattle	SW CFW
	Wattle / Coir Fiber Wattle with Polyacrylamide (PAM)	
1634.01	Temporary Rock Sediment Dam Type-A	
1634.02	Temporary Rock Sediment Dam Type-B	
1635.01	Rock Pipe Inlet Sediment Trap Type-A	
1635.02	Rock Pipe Inlet Sediment Trap Type-B	
1630.04	Stilling Basin	
1630.06	Special Stilling Basin	
	Rock Inlet Sediment Trap:	
1632.01	Type A	A
1632.02	Type B	B
1632.03	Type C	C
	Skimmer Basin	
	Tiered Skimmer Basin	
	Infiltration Basin	

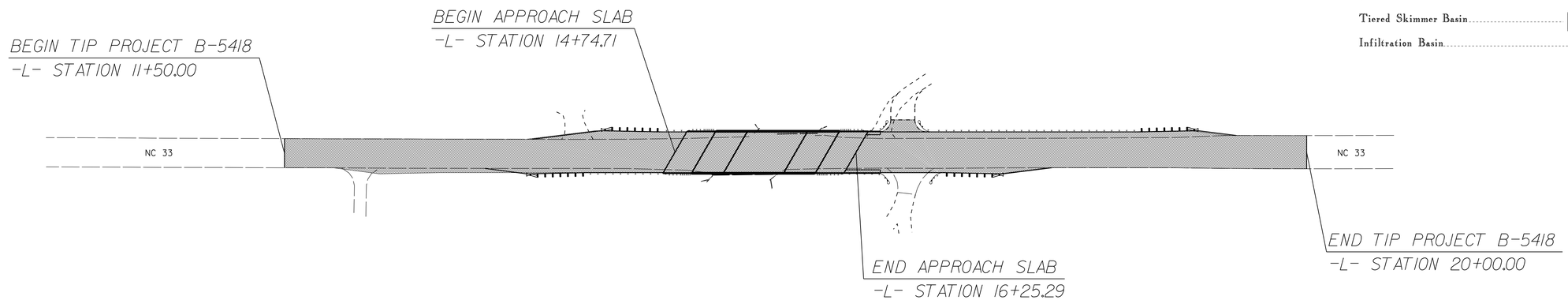

GRAPHIC SCALE

25 0 50
PLANS

DIVISION TWO DDC UNIT
DIVISION OF HIGHWAYS
STATE OF NORTH CAROLINA

THESE EROSION AND SEDIMENT CONTROL PLANS COMPLY WITH THE REGULATIONS SET FORTH BY THE NCG-010000 GENERAL CONSTRUCTION PERMIT EFFECTIVE AUGUST 3, 2011 ISSUED BY THE NORTH CAROLINA DEPARTMENT OF ENVIRONMENT AND NATURAL RESOURCES DIVISION OF WATER QUALITY.

2012 STANDARD SPECIFICATIONS

Prepared in the Office of:

DIVISION 2 DDC
PO Box 1587
Greenville, NC 27835

Lang Jones, DDC Engineer
Level IIIA
Certification #274

Roadway Standard Drawings

The following roadway english standards as appear in "Roadway Standard Drawings"– Roadway Design Unit – N. C. Department of Transportation – Raleigh, N. C., dated January 2012 and the latest revison thereto are applicable to this project and by reference hereby are considered a part of these plans.

1604.01	Railroad Erosion Control Detail	1632.01	Rock Inlet Sediment Trap Type A
1605.01	Temporary Silt Fenee	1632.02	Rock Inlet Sediment Trap Type B
1606.01	Special Sediment Control Fence	1632.03	Rock Inlet Sediment Trap Type C
1607.01	Gravel Construction Entrance	1633.01	Temporary Rock Silt Check Type A
1622.01	Temporary Berms and Slope Drains	1633.02	Temporary Rock Silt Check Type B
1630.01	Riser Basin	1634.01	Temporary Rock Sediment Dam Type A
1630.02	Silt Basin Type B	1634.02	Temporary Rock Sediment Dam Type B
1630.03	Temporary Silt Ditch	1635.01	Rock Pipe Inlet Sediment Trap Type A
1630.04	Stilling Basin	1635.02	Rock Pipe Inlet Sediment Trap Type B
1630.05	Temporary Diversion	1640.01	Coir Fiber Baffle
1630.06	Special Stilling Basin	1645.01	Temporary Stream Crossing
1631.01	Matting Installation		

G:\PROJECTS\NYNDL\ 05-NOV-2013 JWJ
$$$$USERNAME$$$$ $$$$50\PITT50_DDC2_PSH_EC1.DGN

PROJECT REFERENCE NO.	SHEET NO.
B-5418	EC2

Std. #	Description	Symbol
1605.01	High Vis Temporary Silt Fence	
1632.03	Rock Inlet Sediment Trap Type C	
SP	Wattle with Polyacrylamide	
SP	Wattle	

ENVIRONMENTALLY SENSITIVE AREA
SEE PROJECT SPECIAL PROVISIONS

NAD 83/NSRS 2007

50 25 0 50 100
PLANS

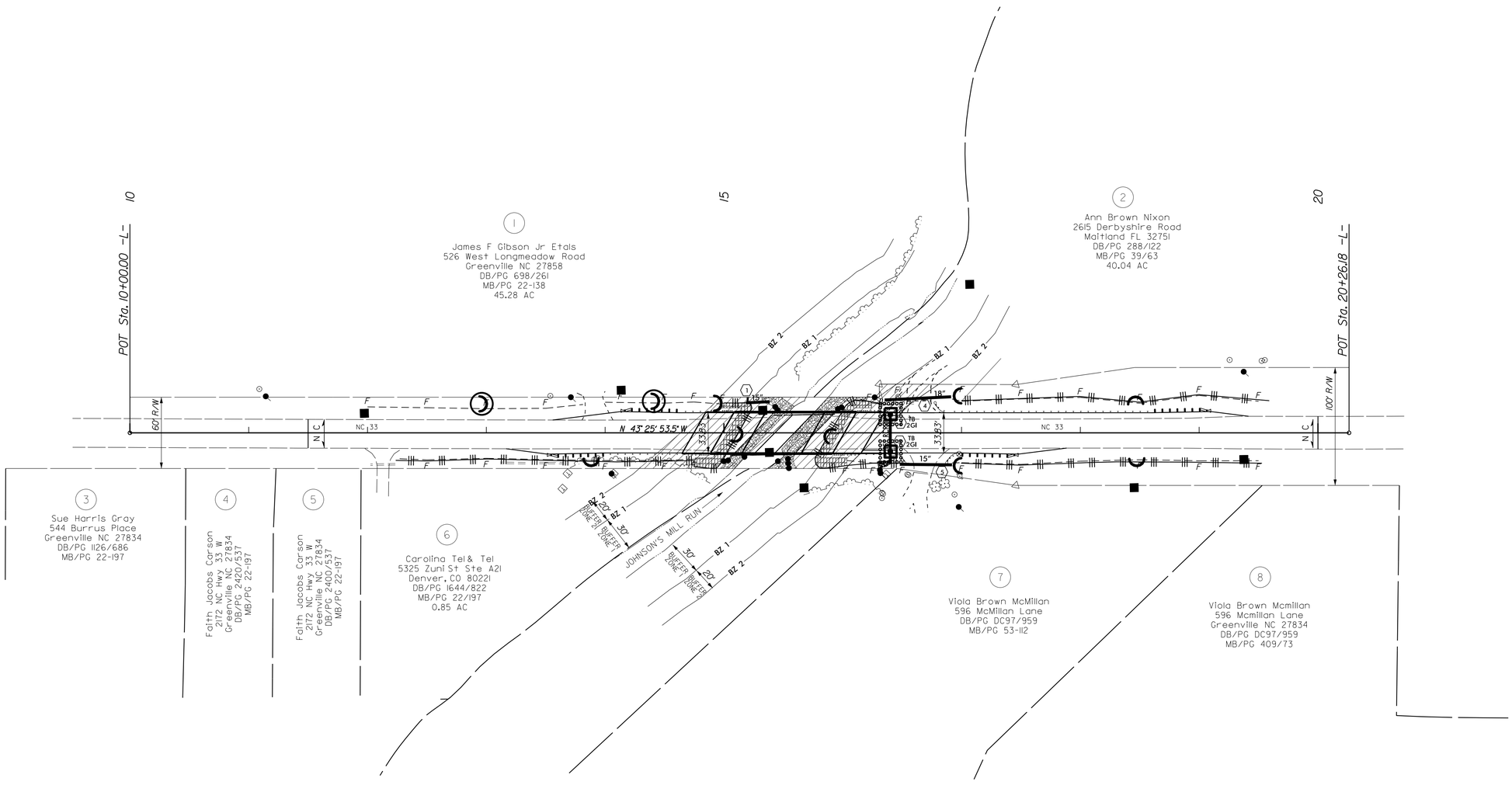

SOIL STABILIZATION TIMEFRAMES

SITE DESCRIPTION	STABILIZATION TIME	TIMEFRAME EXCEPTIONS
PERIMETER DIKES, SWALES, DITCHES AND SLOPES	7 DAYS	NONE
HIGH QUALITY WATER (HQW) ZONES	7 DAYS	NONE
SLOPES STEEPER THAN 3:1	7 DAYS	IF SLOPES ARE 10' OR LESS IN LENGTH AND ARE NOT STEEPER THAN 2:1, 14 DAYS ARE ALLOWED.
SLOPES 3:1 OR FLATTER	14 DAYS	7 DAYS FOR SLOPES GREATER THAN 50' IN LENGTH.
ALL OTHER AREAS WITH SLOPES FLATTER THAN 4:1	14 DAYS	NONE, EXCEPT FOR PERIMETERS AND HQW ZONES.

NOTES: ANY DEVIATION FROM OPTIONS GIVEN WILL REQUIRE PRIOR APPROVAL BY ENGINEER.

ADDITIONAL EROSION CONTROL DEVICES MAY NEED TO BE INSTALLED AS DIRECTED BY THE ENGINEER.

CONTRACTOR SHALL INSTALL SPECIAL SEDIMENT CONTROL FENCE OR WATTLES IN LOW AREAS OF SILT FENCE AS NEEDED OR DIRECTED BY THE ENGINEER.

REVISIONS

8/17/99

05-NOV-2013 11:11
C:\PROJECTS\PITT\Pitt #50\PITT50_DDC2_PSH-EC2.dgn
$$$$USERNAME$$$$

PROJECT REFERENCE NO.	SHEET NO.
B-5418	EC3

SILT FENCE WATTLE BREAK DETAIL

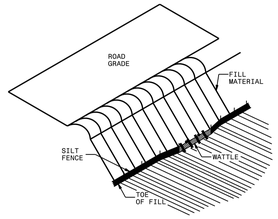

ISOMETRIC VIEW

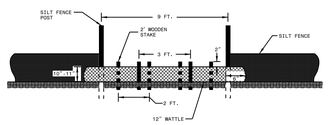

VIEW FROM SLOPE

NOTES:

USE MINIMUM 12 IN. DIAMETER EXCELSIOR WATTLE AND LENGTH OF 10 FT.

EXCAVATE A 1 TO 2 INCH TRENCH FOR WATTLE TO BE PLACED.

DO NOT PLACE WATTLE ON TOE OF SLOPE.

USE 2 FT. WOODEN STAKES WITH A 2 IN. BY 2 IN. NOMINAL CROSS SECTION.

INSTALL A MINIMUM OF 2 UPSLOPE STAKES AND 4 DOWNSLOPE STAKES AT AN ANGLE TO WEDGE WATTLE TO GROUND.

PROVIDE STAPLES MADE OF 0.125 IN. DIAMETER STEEL WIRE FORMED INTO A U SHAPE NOT LESS THAN 12" IN LENGTH.

INSTALL STAPLES APPROXIMATELY EVERY 1 LINEAR FOOT ON BOTH SIDES OF WATTLE AND AT EACH END TO SECURE IT TO THE SOIL.

WATTLE INSTALLATION CAN BE ON OUTSIDE OF THE SILT FENCE AS DIRECTED.

INSTALL TEMPORARY SILT FENCE IN ACCORDANCE WITH SECTION 1605 OF THE STANDARD SPECIFICATIONS.

INSET A

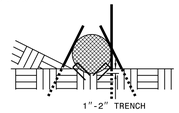

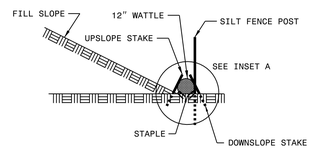

SIDE VIEW

NOT TO SCALE

MATTING INSTALLATION DETAIL

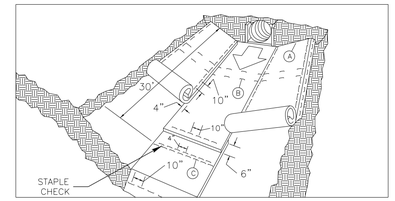

MATTING IN DITCHES

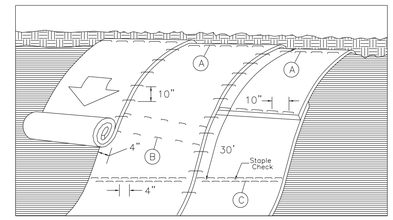

MATTING ON SLOPES

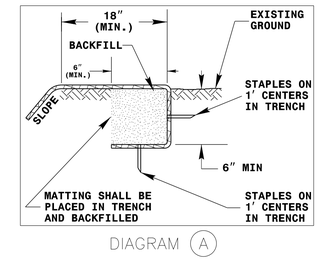

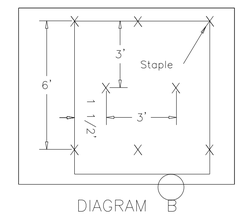

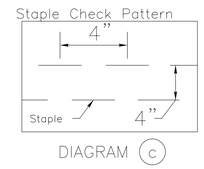

NOTES:

THIS DETAIL APPLIES TO STRAW, EXCELSIOR, AND PERMANENT SOIL REINFORCEMENT MAT (PSRM) INSTALLATION.

STAPLES SHALL BE NO. 11 GAUGE STEEL WIRE FORMED INTO A "U" SHAPE WITH A MINIMUM THROAT WIDTH OF 1 INCH AND NOT LESS THAN 6 INCHES IN LENGTH.

NOT TO SCALE

STATE OF NORTH CAROLINA DEPT. OF TRANSPORTATION DIVISION OF HIGHWAYS RALEIGH, N.C.

ENGLISH STANDARD DRAWING FOR

ROCK INLET SEDIMENT TRAP TYPE 'C'

SHEET 1 OF 1

1632.03

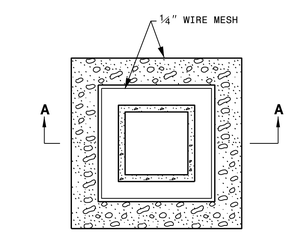

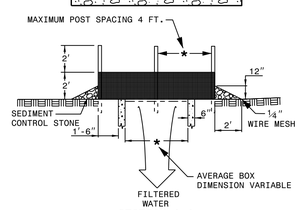

SECTION A-A

MULTI-DIRECTIONAL FLOW

NOTE
USE NO. 5 OR NO. 57 STONE FOR SEDIMENT CONTROL STONE.
USE 24 GAUGE MINIMUM WIRE MESH HARDWARE CLOTH WITH 1/4 INCH MESH OPENINGS.
PLACE TOP OF WIRE MESH A MINIMUM OF ONE FOOT BELOW THE SHOULDER OR ANY DIVERSION POINT.
INSTALL WIRE MESH UNDER SEDIMENT CONTROL STONE.
USE 5' STEEL POST, INSTALLED 1.5' DEEP MINIMUM, AND OF THE SELF-FASTENER ANGLE STEEL TYPE.
SPACE POST A MAXIMUM OF 4'.

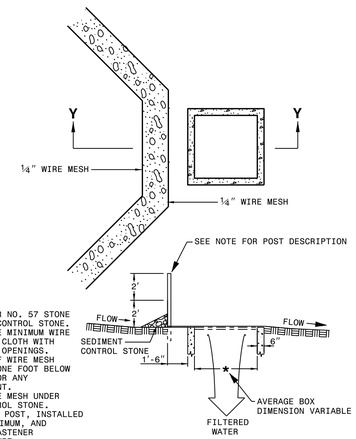

SECTION Y-Y

SINGLE-DIRECTIONAL FLOW

NOT TO SCALE

STATE OF NORTH CAROLINA DEPT. OF TRANSPORTATION DIVISION OF HIGHWAYS RALEIGH, N.C.

ENGLISH STANDARD DRAWING FOR

TEMPORARY SILT FENCE

SHEET 1 OF 1

1605.01

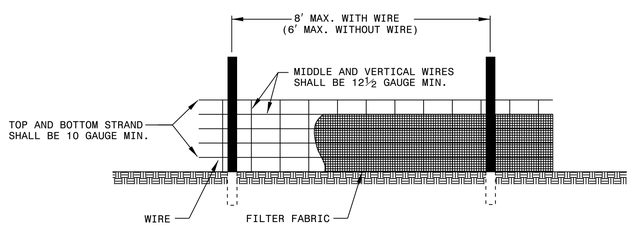

NOTES
USE WIRE A MINIMUM OF 32" IN WIDTH AND WITH A MINIMUM OF 6 LINE WIRES WITH 12" STAY SPACING.
USE FILTER FABRIC A MINIMUM OF 36" IN WIDTH AND FASTEN ADEQUATELY TO THE WIRE AS DIRECTED BY THE ENGINEER.
PROVIDE 5'-0" STEEL POST OF THE SELF-FASTENER ANGLE STEEL TYPE.

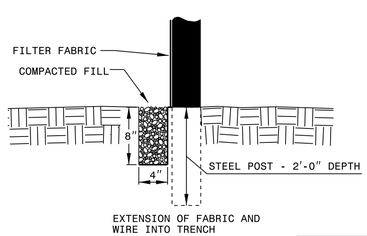

NOT TO SCALE

WATTLE WITH POLYACRYLAMIDE (PAM) DETAIL

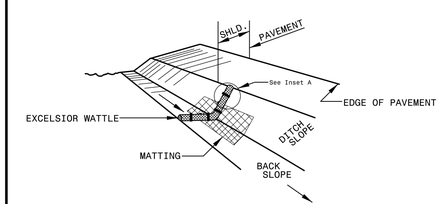

ISOMETRIC VIEW

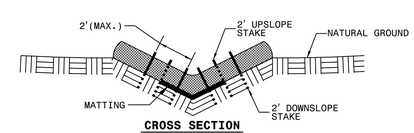

CROSS SECTION
VEE DITCH

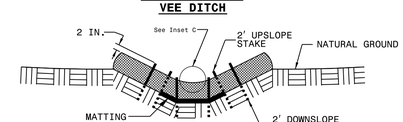

CROSS SECTION
TRAPEZOIDAL DITCH

NOTES:

USE MINIMUM 12 IN. DIAMETER EXCELSIOR WATTLE.

USE 2 FT. WOODEN STAKES WITH A 2 IN. BY 2 IN. NOMINAL CROSS SECTION.

ONLY INSTALL WATTLE(S) TO A HEIGHT IN DITCH SO FLOW WILL NOT WASH AROUND WATTLE AND SCOUR DITCH SLOPES AND AS DIRECTED.

INSTALL A MINIMUM OF 2 UPSLOPE STAKES AND 4 DOWNSLOPE STAKES AT AN ANGLE TO WEDGE WATTLE TO BOTTOM OF DITCH.

PROVIDE STAPLES MADE OF 0.125 IN. DIAMETER STEEL WIRE FORMED INTO A U SHAPE NOT LESS THAN 12" IN LENGTH.

INSTALL STAPLES APPROXIMATELY EVERY 1 LINEAR FOOT ON BOTH SIDES OF WATTLE AND AT EACH END TO SECURE IT TO THE SOIL.

INSTALL MATTING IN ACCORDANCE WITH SECTION 1631 OF THE STANDARD SPECIFICATIONS.

PRIOR TO POLYACRYLAMIDE (PAM) APPLICATION, OBTAIN A SOIL SAMPLE FROM PROJECT LOCATION, AND FROM OFFSITE MATERIAL, AND ANALYZE FOR APPROPRIATE PAM FLOCCULANT TO BE APPLIED TO EACH WATTLE.

INITIALLY APPLY 2 OUNCES OF ANIONIC OR NEUTRALLY CHARGED PAM OVER WATTLE WHERE WATER WILL FLOW AND 1 OUNCE OF PAM ON MATTING ON EACH SIDE OF WATTLE. REAPPLY PAM AFTER EVERY RAINFALL EVENT THAT IS EQUAL TO OR EXCEEDS 0.50 IN.

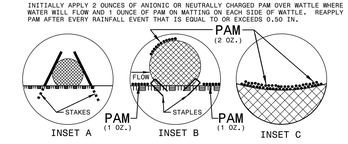

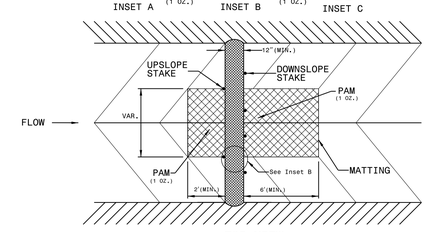

TOP VIEW

NOT TO SCALE

REVISIONS

8/17/99

05-NOV-2013 14:
ENGLISH (S)
$$$$USERNAME$$$$

T.I.P. NO.	SHEET NO.
B–5418	UC–1

TIP PROJECT: B–5418

STATE OF NORTH CAROLINA
DIVISION OF HIGHWAYS

UTILITY CONSTRUCTION PLANS
PITT COUNTY

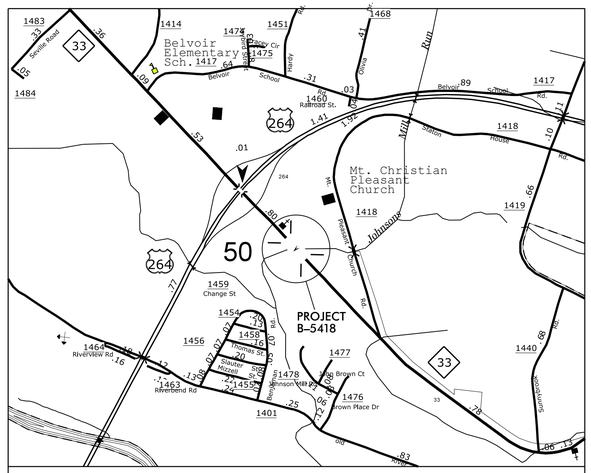

VICINITY MAP
(NOT TO SCALE)

LOCATION: BRIDGE #50 OVER JOHNSON'S MILL RUN ON NC 33

TYPE OF WORK: WATER MAIN RELOCATION

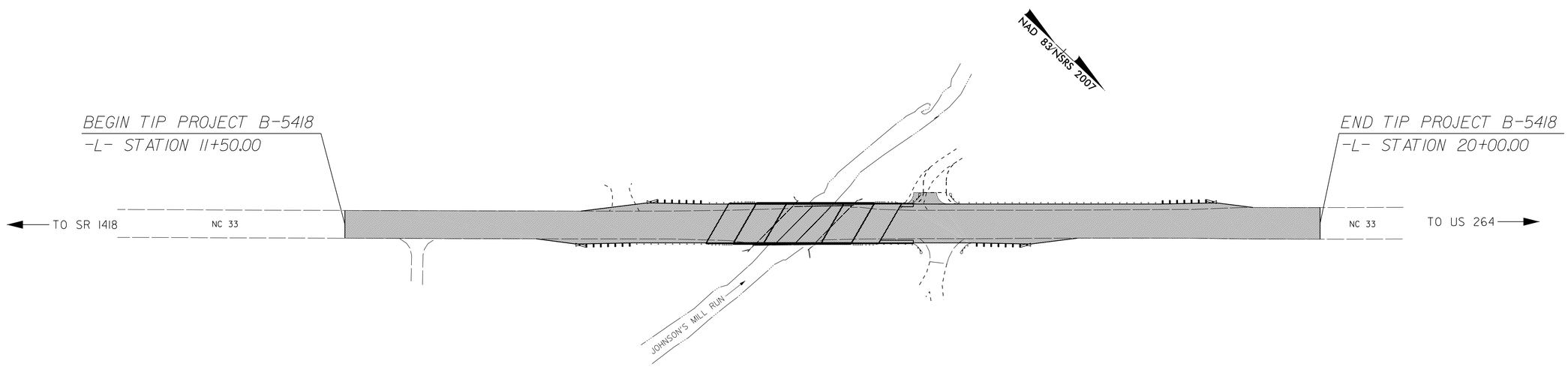

GRAPHIC SCALES

50 25 0 50 100
PLANS

50 25 0 50 100
PROFILE (HORIZONTAL)

10 5 0 10 20
PROFILE (VERTICAL)

INDEX OF SHEETS

SHEET NO.	DESCRIPTION
UC–1	TITLE SHEET
UC–2	SUMMARY OF QUANTITIES
UC–3	UTILITY CONSTRUCTION SHEET
UC–4	DETAILS SHEET

WATER OWNER ON PROJECT

(1) GUC – WATER RESOURCES DEPARTMENT

SEAL

NORTH CAROLINA PROFESSIONAL SEAL 16710 ENGINEER DWAYNE H. ALLIGOOD

09/19/2013

PREPARED IN THE OFFICE OF:
DIVISION OF HIGHWAYS
DIVISION 2 – DDC

P.O. BOX 1587
GREENVILLE, NC 27835
PHONE (252) 439–2800
FAX (252) 830–3352

DWAYNE H. ALLIGOOD, P.E. — UTILITIES ENGINEER
VAN TRAN, E.I. — UTILITIES PROJECT DESIGNER

09/09/99
05-NOV-2013 11:11
G:\PROJECTS\PITT\Pitt #50\PITT50_DDC2_PSH_UC1.DGN
$$$$USERNAME$$$$

PROJECT REFERENCE NO.	SHEET NO.
B-5418	UC-2

UTILITIES ENGINEER

NORTH CAROLINA PROFESSIONAL SEAL 16710 ENGINEER DWAYNE H. ALLIGOOD

09/19/2013

UTILITY CONSTRUCTION

STATE OF NORTH CAROLINA
DIVISION OF HIGHWAYS
SUMMARY OF QUANTITIES

WATER MAIN	QUANTITY	UNIT	ITEM DESCRIPTION
	110	LF	8" DI PIPE - PC 350 (AWWA C600)
	452	LF	10" HDPE PIPE - DR9 (AWWA C906)
	2	EA	8" TAPPING GATE VALVE AND VALVE BOX
	2	EA	DI PIPE TO HDPE TRANSITION
	2	EA	CONCRETE THRUST COLLAR
	4	EA	8" DI 45° ELBOW WITH RESTRAINED JOINTS
	1	EA	RELOCATE FIRE HYDRANT
	538	LF	ABANDON 8" UTILITY PIPE
	300	LF	TEMPORARY SILT FENCE
	0.2	ACRES	SEEDING AND MULCHING

REVISIONS

8/17/99

05-NOV-2013 11:11
C:\PROJECTS\PITT\Pitt *50\PITT50_DDC2_PSH_UC2.DGN
$$$$USERNAME$$$$

NOTES:
1. 10" HDPE WATER MAIN TO CONFORM TO THE FOLLOWING: AWWA C906, AWWA M55, PRESSURE CLASS 200, DR9, DUCTILE IRON PIPE SIZE (DIPS) DIMENSIONS, AND MATERIAL DESIGNATION PE 3408 AND NSF APPROVED FOR POTABLE WATER.
2. THE PROPOSED WATER LINE RELOCATION DOES NOT IMPACT ANY ENVIRONMENTALLY SENSITIVE AREAS AND NO ENVIRONMENTAL PERMITS ARE REQUIRED.
3. LOCATION AND ELEVATION OF ALL UNDERGROUND UTILITIES SHALL BE FIELD VERIFIED BY CONTRACTOR AND MAINTAIN 18" MINIMUM VERTICAL SEPARATION.
4. RECONNECT ALL WATER SERVICE LINES AS NECESSARY.

UTILITY CONSTRUCTION

PLAN

PROJECT REFERENCE NO.	SHEET NO.
B-5418	UC3

UTILITIES ENGINEER

NORTH CAROLINA PROFESSIONAL SEAL 16710 ENGINEER DWAYNE H. ALLIGOOD
09/19/2013

DATUM DESCRIPTION

THE LOCALIZED COORDINATE SYSTEM DEVELOPED FOR THIS PROJECT IS BASED ON THE STATE PLANE COORDINATES ESTABLISHED BY NCDOT FOR MONUMENT "CONTROL POINT 2"
WITH NAD 83/NSRS 2007 STATE PLANE GRID COORDINATES OF
NORTHING: 697808.0070(ft) EASTING: 2472977.5210(ft)
ELEVATION: 27.757(ft)
THE AVERAGE COMBINED GRID FACTOR USED ON THIS PROJECT (GROUND TO GRID) IS: 0.9999017928
THE N.C. LAMBERT GRID BEARING AND LOCALIZED HORIZONTAL GROUND DISTANCE FROM "CONTROL POINT 2" TO -L- STATION 10+00 IS
S45°28'01"E 533.0426'
ALL LINEAR DIMENSIONS ARE LOCALIZED HORIZONTAL DISTANCES
VERTICAL DATUM USED IS NAVD 88

NAD 83/NSRS 2007

50 25 0 50 100
PLANS

LEGEND:

- Temporary Silt Fence
- Tapping Gate Valve (TGV)
- HDPE to DIP Transition
- Thrust Collar
- Relocated Existing Fire Hydrant (RFH)

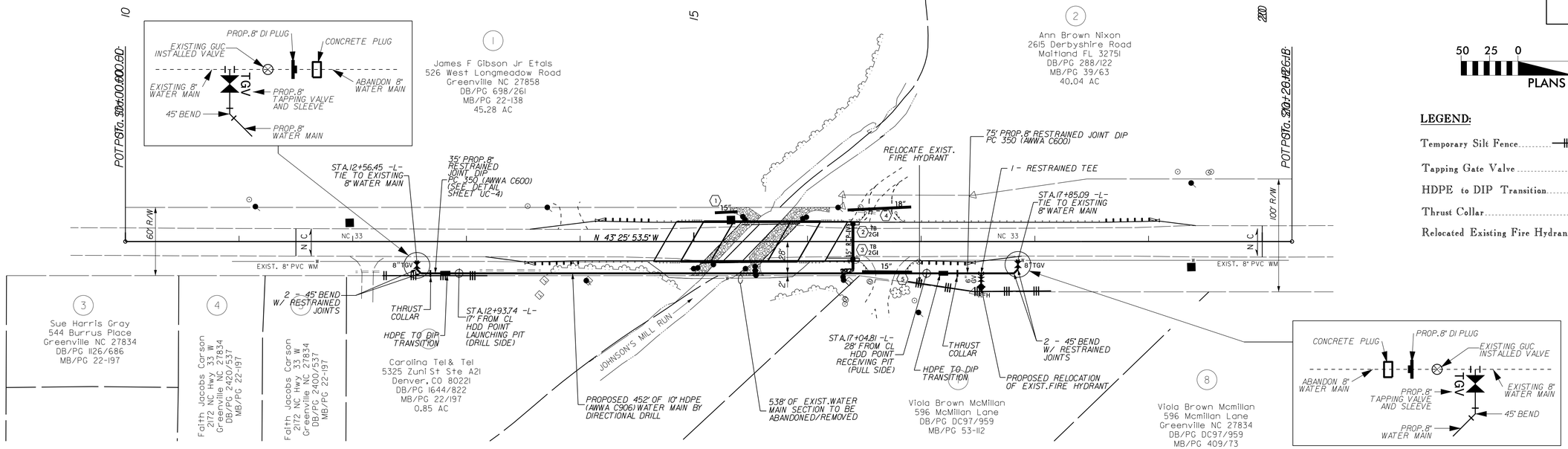

PROFILE ALONG PROPOSED WATER MAIN -WM-

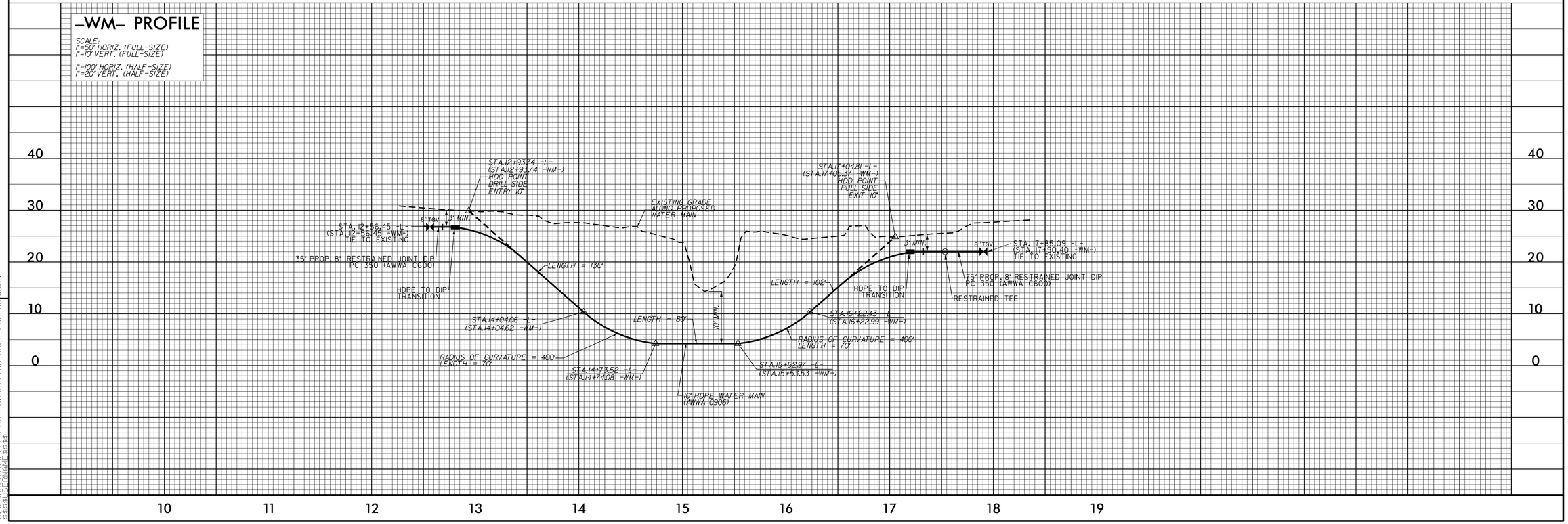

REVISIONS

8/17/99

05-NOV-2013 11:11 TN Plot "60\PITT60_DDC2_PSH_UC3.DGN"
$$$$USERNAME$$$$

PROJECT REFERENCE NO.	SHEET NO.
B-5418	UC-4

UTILITIES ENGINEER

NORTH CAROLINA PROFESSIONAL SEAL 16710 ENGINEER DWAYNE H. ALLICOOD

09/19/2013

UTILITY CONSTRUCTION DETAILS SHEET

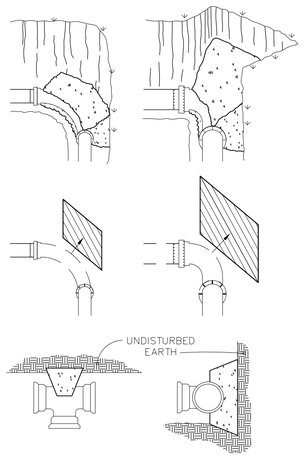

MINIMUM CONCRETE BLOCKING (C.Y.) *			
NOMINAL PIPE DIAMETER INCHES	TEES & DEAD ENDS	90° BEND	45° BEND
4	1/3	1/3	1/3
6	1/3	1/3	1/3
8	1/3	1/2	1/3
10	2/3	3/4	1/2
12	3/4	1.0	2/3
14	1.0	1 1/2	3/4
16	1 1/3	2.0	1.0
18	1 2/3	2 1/3	1 1/3
20	2.0	3.0	1 2/3
24	3.0	4 1/3	2 1/3

NOTES:

1) FITTING SHALL BE WRAPPED WITH A MINIMUM 4 MIL PLASTIC.
2) NO CONCRETE SHALL COVER BOLTS OR GLANDS.

* CONCRETE SHALL BE 3000 P.S.I. MIX.

STANDARD REACTION BLOCKING

NTS

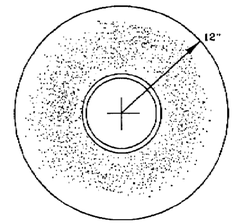

DETAIL

PRECAST CONCRETE COLLAR

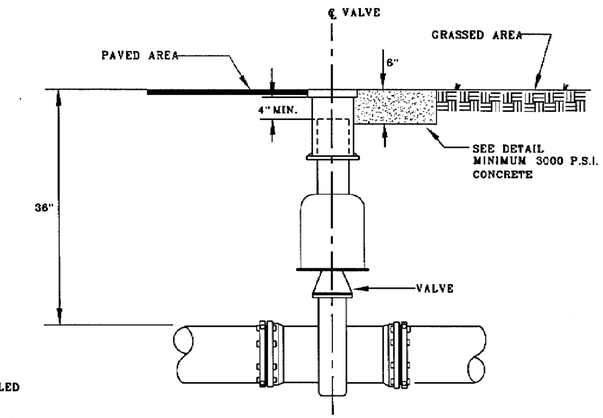

NOTE:

VALVE BOX SHALL NOT BE INSTALLED IN CURB AND GUTTER.

VALVE BOX SHALL BE IN ACCORDANCE WITH MANUAL.

VALVE BOX SHALL BE CENTERED AND PLUMBED OVER VALVE.

TYPICAL VALVE BOX

NTS

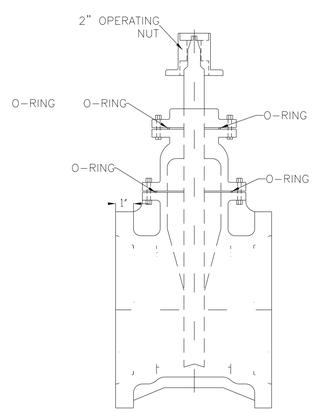

TYPICAL RESILIENT MECHANCIAL JOINT GATE VALVE DETAIL

NTS

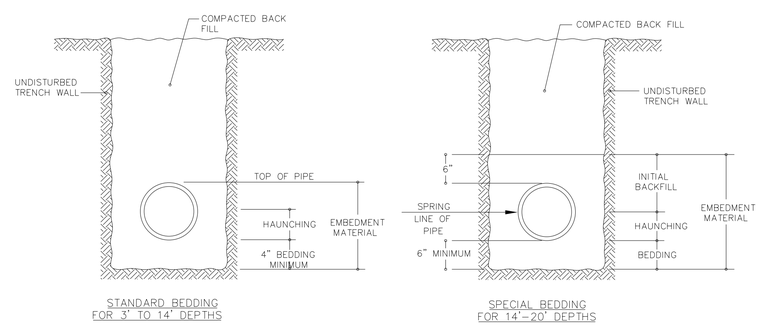

NOTES:

1. EMBEDMENT MATERIAL MUST BE CLASS I (NO. 67 OR NO. 78M WASHED STONE IS TYPICALLY USED).

2. EMBEDMENT MATERIAL SHALL BE COMPACTED TO A MINIMUM 95% STANDARD PROCTOR DENSITY FOR CLASS I MATERIAL.

3. STANDARD BEDDING SHALL BE UTILIZED FOR ALL CASES WHERE TRENCH BOTTOMS ARE UNSTABLE DUE TO SOIL TYPE, OR MOISTURE CONDITIONS.

TYPICAL BEDDING FOR FLEXIBLE & SEMI-RIGID PIPE

NTS

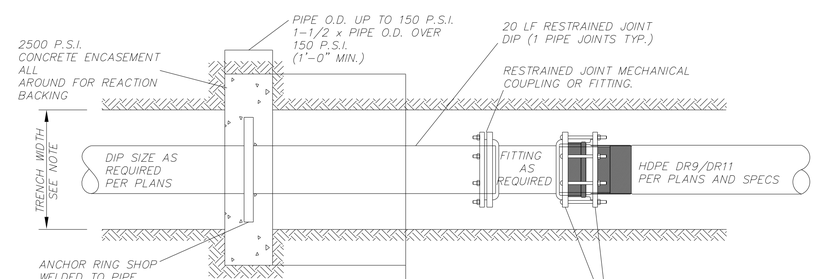

ANCHOR RING DIMENSIONS		
NOMINAL PIPE SIZE	O.D. OF RINGS	THICKNESS
4" - 12"	PIPE O.D. + 6"	1/2"
16" - 24"	PIPE O.D. + 7"	3/4"
30" & 36"	PIPE O.D. + 8"	1"

TYPICAL DIP TO HDPE TRANSITION DETAIL WITH THRUST COLLAR

NTS

8/17/99

05-NOV-2013 11:11
S:\HICKORY\DESIGN\B5418\TTVPitt =50\PITT50.DDC2_PSH_UC4.DGN
$$$$USERNAME$$$$

PROJECT REFERENCE NO.	SHEET NO.
B-5418	U01

UTILITIES BY OTHERS

UTILITY OWNERS ON PROJECT

GREENVILLE UTILITIES COMMISION - POWER

NOTE:
ALL PROPOSED UTILITY WORK SHOWN ON THIS SHEET WILL BE DONE BY OTHERS

NAD 83/NSRS 2007

40 20 0 40 80
PLANS

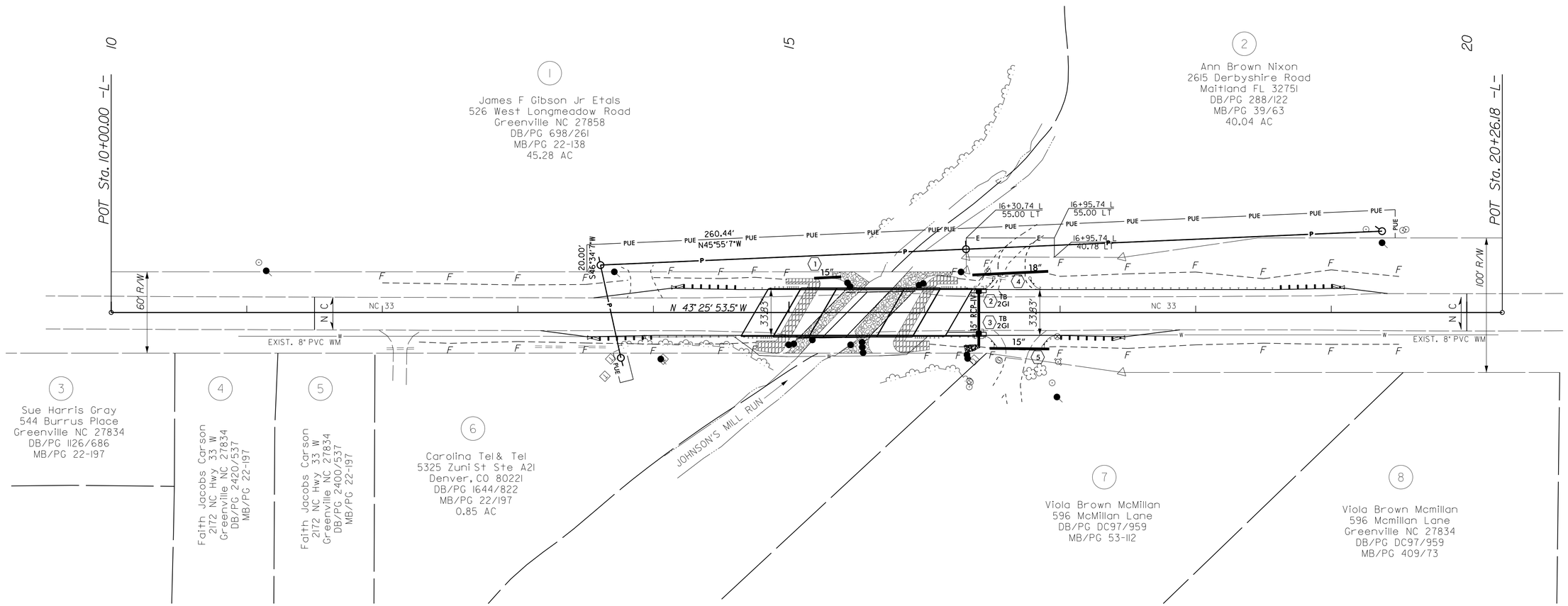

5/14/99
c:\PROJECTS\PITT50\PITT50.DDC2.PSH_U01.dgn
05-NOV-2013 11:11
$$$USERNAME$$$

PROJECT REFERENCE NO.	SHEET NO.
B-5418	U02

UTILITIES BY OTHERS

NOTE:
ALL PROPOSED UTILITY WORK SHOWN ON THIS SHEET WILL BE DONE BY OTHERS

NAD 83/NSRS 2007

NOT TO SCALE

UTILITY OWNERS ON PROJECT

CENTURYLINK

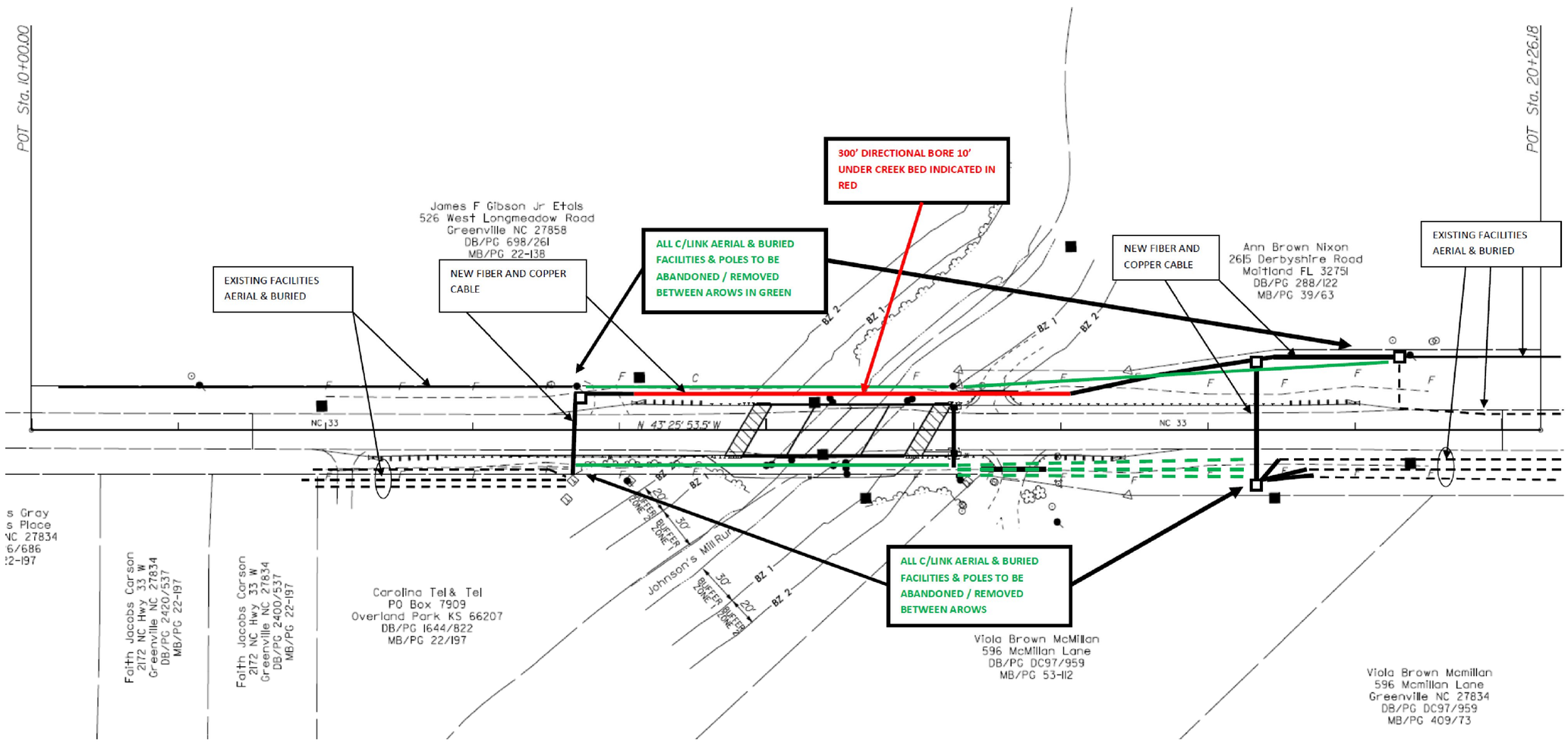

5/14/99

05-NOV-2013 11:11
G:\PROJECTS\XP\B5418\PITT50_DDC2_PSH_U02.dgn
$$$$USERNAME$$$$

DIVISION OF HIGHWAYS
STATE OF NORTH CAROLINA

CROSS–SECTION SUMMARY

IN CUBIC YARDS

NOTE: EMBANKMENT COLUMN DOES NOT INCLUDE BACKFILL FOR UNDERCUT.

LOCATION (–LREV–)	UNCLASSIFIED EXCAVATION	UNDERCUT	EMBANKMENT
12 + 00.00	0	0	0
12 + 50.00	0	0	15
13 + 00.00	0	0	14
13 + 50.00	1	0	13
14 + 00.00	1	0	19
14 + 50.00	1	0	27
14 + 74.71	17	0	16
14 + 98.56	33	0	15
15 + 00.00	2	0	1
	BRIDGE		
16 + 00.00	0	0	0
16 + 01.44	2	0	1
16 + 25.29	31	0	15
16 + 40.00	9	0	10
16 + 50.00	0	0	9
16 + 92.00	0	0	45
17 + 00.00	0	0	8
17 + 50.00	2	0	45
18 + 00.00	2	0	28
18 + 50.00	1	0	17
19 + 00.00	2	0	17
19 + 50.00	1	0	16

NOTE: Approximate quantities only. Unclassified Excavation, Borrow Excavation, Fine Grading, Clearing and Grubbing, and Removal of Existing Pavement will be paid for at the contract Lump Sum price for "Grading".

REVISIONS

8/17/99

05-NOV-2013 11:42
S:\PROJECTS\B-5418\TYP\tt "50\PITT50_DDC2.PSH_XIA.DGN
$$$$USERNAME$$$$

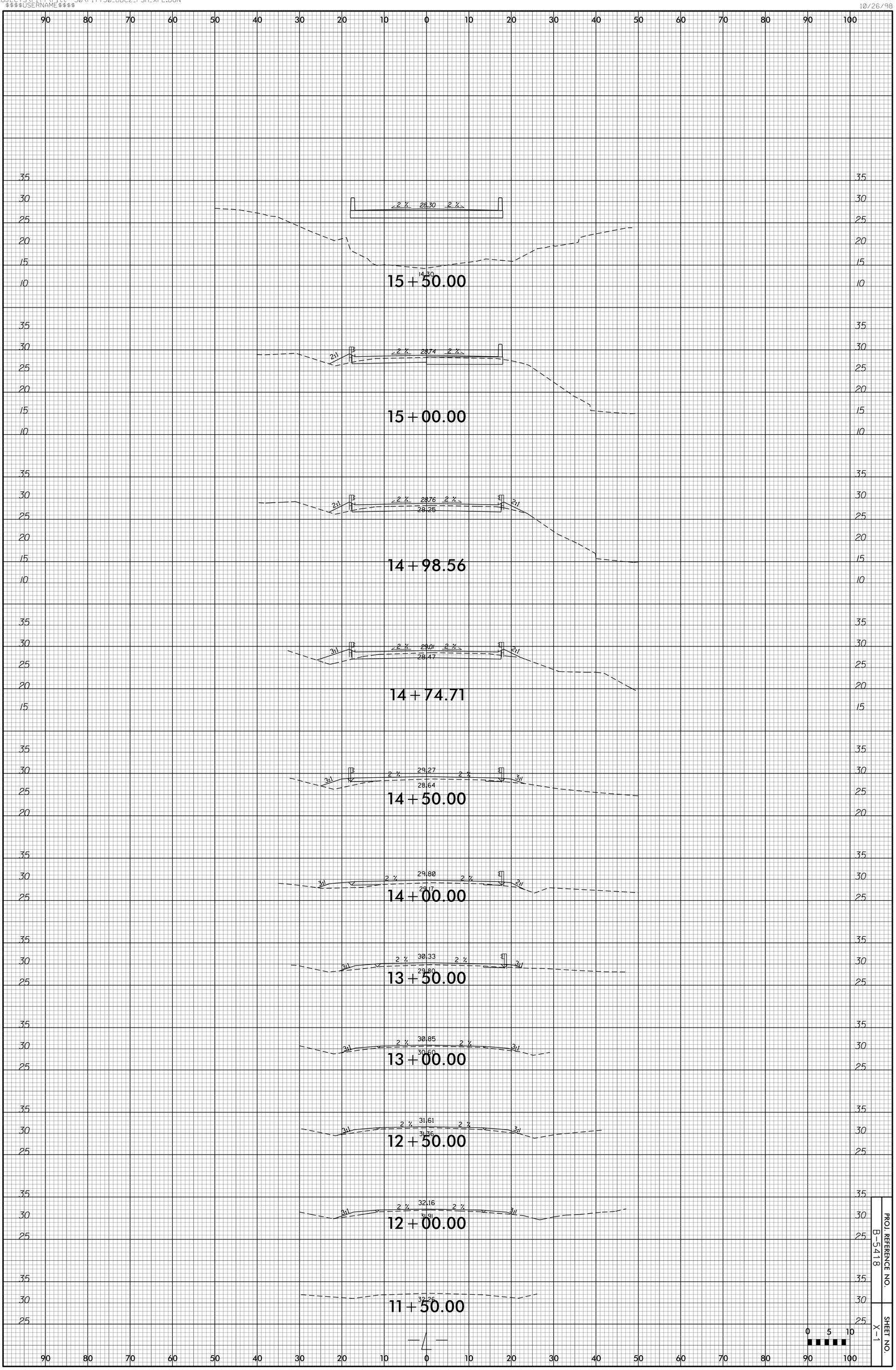

PROJ. REFERENCE NO. B-5418

SHEET NO. X-1

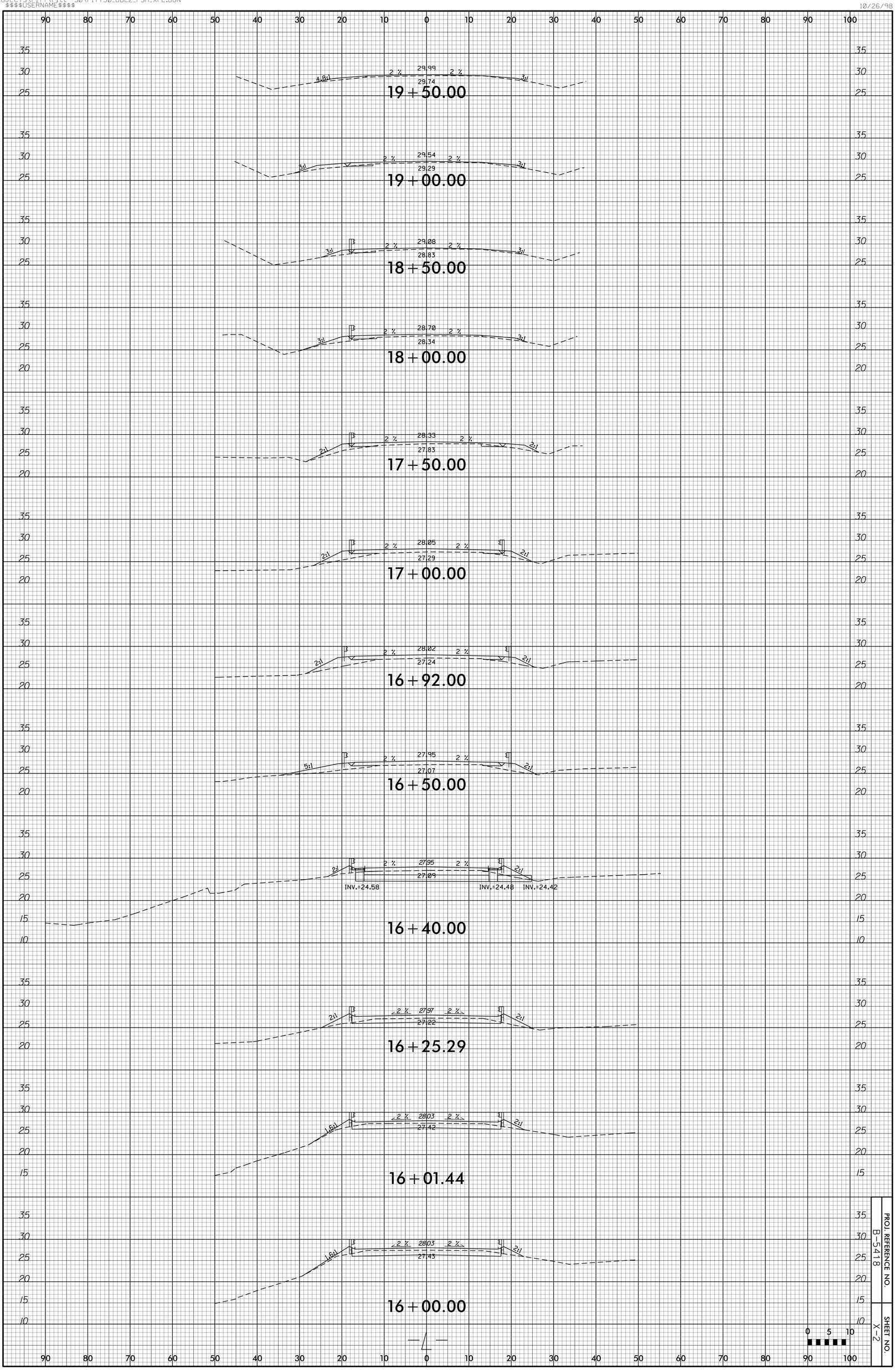

PROJ. REFERENCE NO. B-5418

SHEET NO. X-2

F.A. PROJECT NO.: BRSTP-0033(9)

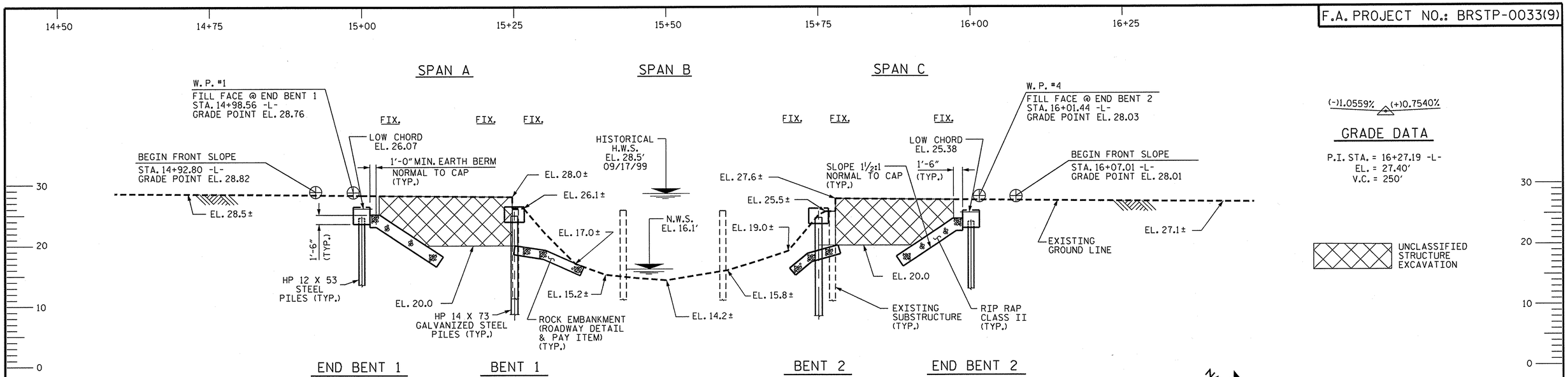

SECTION ALONG -L-

SECTIONS AT END BENTS AND BENT ARE AT RIGHT ANGLES

(-)1.0559% (+)0.7540%

GRADE DATA

P.I. STA. = 16+27.19 -L-
EL. = 27.40'
V.C. = 250'

UNCLASSIFIED STRUCTURE EXCAVATION

NAD 83/NSRS 2007

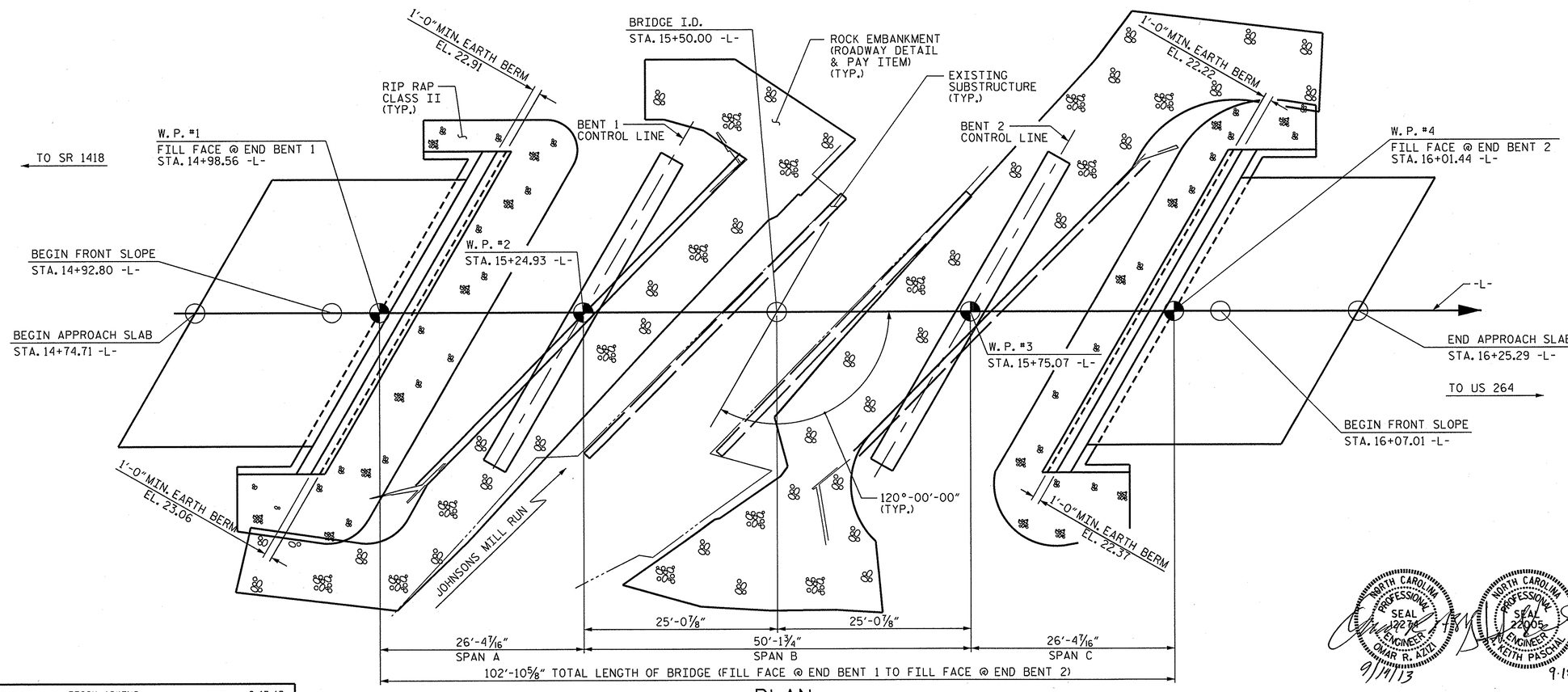

PLAN

PILES NOT SHOWN FOR CLARITY.

I CERTIFY THAT THESE ARE THE AS-BUILT PLANS.

PROJECT NO. B-5418
PITT COUNTY
STATION: 15+50.00 -L-

SHEET 1 OF 3 REPLACES BRIDGE NO. 50

STATE OF NORTH CAROLINA
DEPARTMENT OF TRANSPORTATION
RALEIGH

GENERAL DRAWING

FOR BRIDGE OVER JOHNSONS MILL RUN ON NC 33 BETWEEN SR 1418 AND US 264

NORTH CAROLINA PROFESSIONAL SEAL 12274 ENGINEER OMAR R. AZIZ 9/9/13

NORTH CAROLINA PROFESSIONAL SEAL 22005 ENGINEER KEITH PASCHAL 9-18-13

REVISIONS								SHEET NO.
NO.	BY:	DATE:	NO.	BY:	DATE:			S-1
1			3					TOTAL SHEETS
2			4					19

DRAWN BY :	PEGGY ADKINS	DATE :	8-13-13
CHECKED BY :	KEITH PASCHAL	DATE :	8-26-13
DESIGN ENGINEER OF RECORD:	M. M. AHMED	DATE :	8-26-13

13-SEP-2013 07:30
S:\DPGI\Keith\B-5418\padkins\B-5418_SD_GD_01.dgn
kpaschal

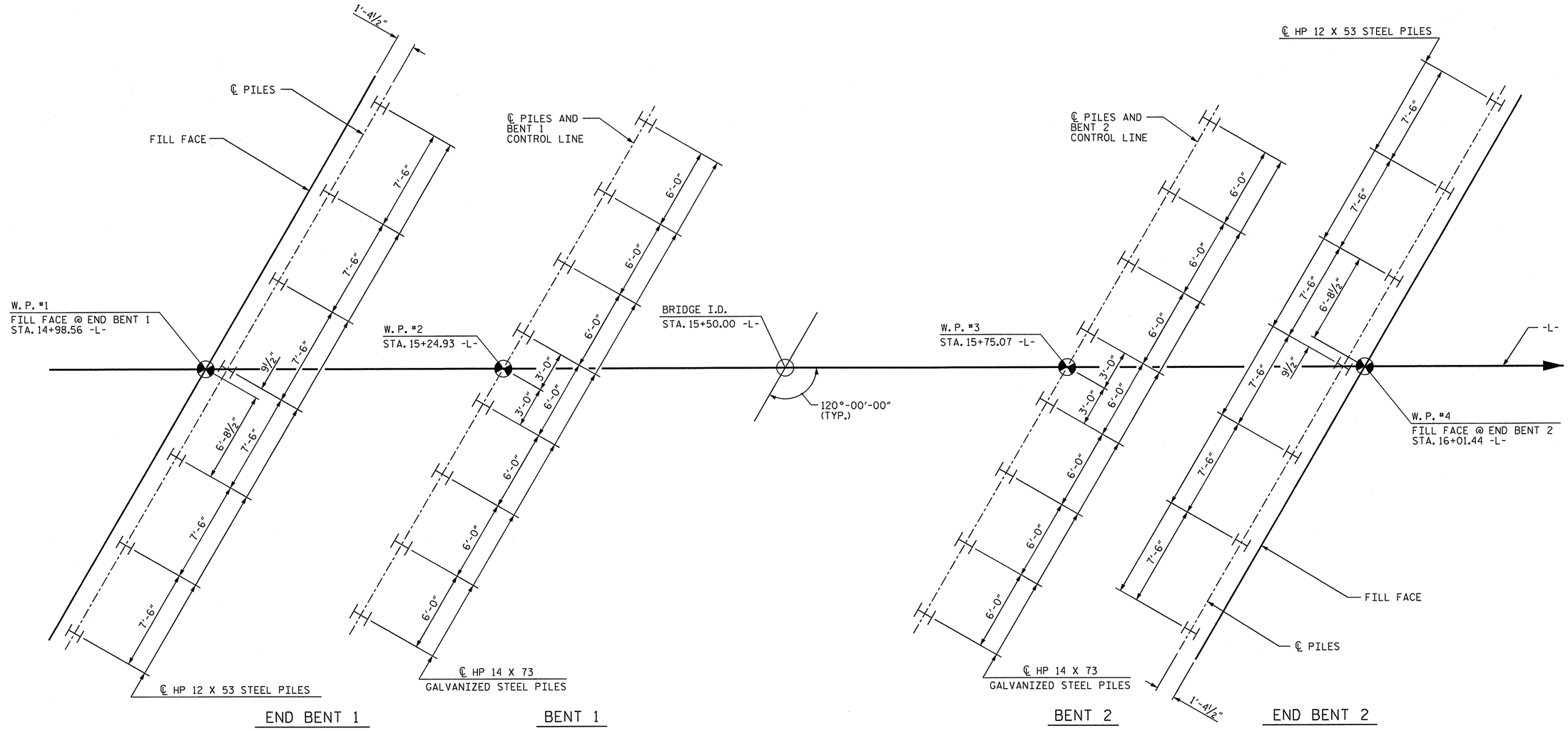

FOUNDATION LAYOUT

DIMENSIONS LOCATING PILES ARE SHOWN TO PILE CENTERLINE

NOTES:

FOR PILES, SEE SECTION 450 OF THE STANDARD SPECIFICATIONS.

PILES AT END BENTS 1 AND 2 ARE DESIGNED FOR A FACTORED RESISTANCE OF 50 TONS PER PILE.

DRIVE PILES AT END BENTS 1 AND 2 TO A REQUIRED DRIVING RESISTANCE OF 85 TONS PER PILE.

PILES AT BENTS 1 AND 2 ARE DESIGNED FOR A FACTORED RESISTANCE OF 90 TONS PER PILE.

DRIVE PILES AT BENTS 1 AND 2 TO A REQUIRED DRIVING RESISTANCE OF 165 TONS PER PILE. THIS REQUIRED DRIVING RESISTANCE INCLUDED ADDITIONAL RESISTANCE FOR DOWNDRAG OR SCOUR.

INSTALL PILES AT BENTS 1 AND 2 TO A TIP ELEVATION NO HIGHER THAN -21.0 FT.

THE SCOUR CRITICAL ELEVATION FOR BENTS 1 AND 2 IS ELEVATION 4.0 FT. SCOUR CRITICAL ELEVATIONS ARE USED TO MONITOR POSSIBLE SCOUR PROBLEMS DURING THE LIFE OF THE STRUCTURE.

IT HAS BEEN ESTIMATED THAT A HAMMER WITH AN EQUIVALENT RATED ENERGY IN THE RANGE OF 30 TO 40 FT-KIPS PER BLOW WILL BE REQUIRED TO DRIVE PILES AT BOTH END BENTS 1 AND 2. THIS ESTIMATED ENERGY RANGE DOES NOT RELEASE THE CONTRACTOR FROM PROVIDING DRIVING EQUIPMENT IN ACCORDANCE WITH SUBARTICLE 450-3(D)(2) OF THE STANDARD SPECIFICATIONS.

IT HAS BEEN ESTIMATED THAT A HAMMER WITH AN EQUIVALENT RATED ENERGY IN THE RANGE OF 35 TO 50 FT-KIPS PER BLOW WILL BE REQUIRED TO DRIVE PILES AT BOTH BENTS 1 AND 2. THIS ESTIMATED ENERGY RANGE DOES NOT RELEASE THE CONTRACTOR FROM PROVIDING DRIVING EQUIPMENT IN ACCORDANCE WITH SUBARTICLE 450-3(D)(2) OF THE STANDARD SPECIFICATIONS.

TESTING PILES WITH THE PDA DURING DRIVING, RESTRIKING OR REDRIVING MAY BE REQUIRED. THE ENGINEER WILL DETERMINE THE NEED FOR PDA TESTING. FOR PDA TESTING, SEE SECTION 450 OF THE STANDARD SPECIFICATIONS AND FOR PILE DRIVING CRITERIA, SEE PILE DRIVING CRITERIA PROVISION.

NORTH CAROLINA PROFESSIONAL SEAL 22005 ENGINEER M. KEITH PASCHAL
9-18-13

PROJECT NO. B-5418
PITT COUNTY
STATION: 15+50.00 -L-

SHEET 2 OF 3

STATE OF NORTH CAROLINA
DEPARTMENT OF TRANSPORTATION
RALEIGH

GENERAL DRAWING

FOR BRIDGE OVER JOHNSONS MILL RUN ON NC 33 BETWEEN SR 1418 AND US 264

REVISIONS						SHEET NO.
NO.	BY:	DATE:	NO.	BY:	DATE:	S-2
1			3			TOTAL SHEETS
2			4			19

DRAWN BY :	PEGGY ADKINS	DATE :	8-13-13
CHECKED BY :	KEITH PASCHAL	DATE :	8-26-13
DESIGN ENGINEER OF RECORD:	M. M. AHMED	DATE :	8-26-13

13-SEP-2013 07:30
S:\DP01\Keith\B-5418\padkins\B-5418_SD_GD_01.dgn
kpaschal

BENCH MARK: CONTROL POINT-1: STA. 11+97.36 -L-, O/S 16.48' LEFT. ELEV. 30.61', NAVD 88.

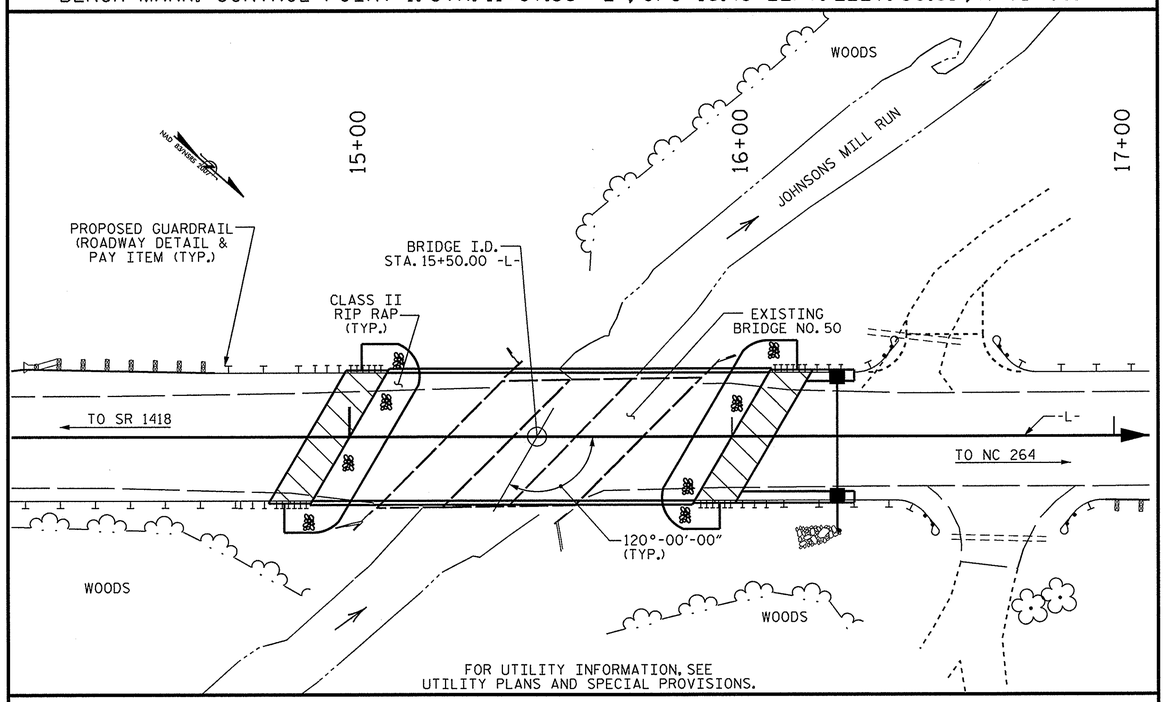

LOCATION SKETCH

NOTES:

ASSUMED LIVE LOAD = HL-93 OR ALTERNATE LOADING.

THIS BRIDGE HAS BEEN DESIGNED IN ACCORDANCE WITH THE AASHTO LRFD BRIDGE DESIGN SPECIFICATIONS.

THIS BRIDGE IS LOCATED IN SEISMIC ZONE 1.

FOR OTHER DESIGN DATA AND GENERAL NOTES, SEE SHEET SN.

FOR SUBMITTAL OF WORKING DRAWINGS, SEE SPECIAL PROVISIONS.

FOR FALSEWORK AND FORMWORK, SEE SPECIAL PROVISIONS.

FOR CRANE SAFETY, SEE SPECIAL PROVISIONS.

FOR GROUT FOR STRUCTURES, SEE SPECIAL PROVISIONS.

THE CONTRACTOR SHALL PROVIDE INDEPENDENT ASSURANCE SAMPLES OF REINFORCING STEEL AS FOLLOWS: FOR PROJECTS REQUIRING UP TO 400 TONS OF REINFORCING STEEL, ONE 30 INCH SAMPLE OF EACH SIZE BAR USED, AND FOR PROJECTS REQUIRING OVER 400 TONS OF REINFORCING STEEL, TWO 30 INCH SAMPLES OF EACH SIZE BAR USED. THE BARS FROM WHICH THE SAMPLES ARE TAKEN MUST THEN BE SPLICED WITH REPLACEMENT BARS OF THE SIZE AND LENGTH OF THE SAMPLE, PLUS A MINIMUM LAP SPLICE OF THIRTY BAR DIAMETERS. PAYMENT FOR THE SAMPLES OF REINFORCING STEEL SHALL BE CONSIDERED INCIDENTAL TO VARIOUS PAY ITEMS.

THE MATERIAL SHOWN IN THE CROSS-HATCHED AREA SHALL BE EXCAVATED FOR A DISTANCE OF 35 FT RIGHT AND 25 FT LEFT OF CENTERLINE ROADWAY AS DIRECTED BY THE ENGINEER. THIS WORK WILL BE PAID FOR AT THE CONTRACT LUMP SUM PRICE FOR UNCLASSIFIED STRUCTURE EXCAVATION. SEE SECTION 412 OF THE STANDARD SPECIFICATIONS.

THE EXISTING STRUCTURE CONSISTING OF 3 SPANS 1 @ 18'-0", 1 @ 17'-0" AND 1 SPAN @ 17'-9", WITH A CLEAR ROADWAY WIDTH OF 33.3 FT AND A REINFORCED CONCRETE FLOOR ON TIMBER JOISTS ON TIMBER CAPS/TIMBER PILES @ VARIOUS CTS. AND LOCATED AT PROPOSED STRUCTURE SHALL BE REMOVED.

THE SUBSTRUCTURE OF THE EXISTING BRIDGE INDICATED ON THE PLANS IS FROM THE BEST INFORMATION AVAILABLE. SINCE THIS INFORMATION IS SHOWN FOR THE CONVENIENCE OF THE CONTRACTOR, THE CONTRACTOR SHALL HAVE NO CLAIM WHATSOEVER AGAINST THE DEPARTMENT OF TRANSPORTATION FOR ANY DELAYS OR ADDITIONAL COST INCURRED BASED ON DIFFERENCES BETWEEN THE EXISTING BRIDGE SUBSTRUCTURE SHOWN ON THE PLANS AND THE ACTUAL CONDITIONS AT THE PROJECT SITE.

REMOVAL OF THE EXISTING BRIDGE SHALL BE PERFORMED SO AS NOT TO ALLOW DEBRIS TO FALL INTO THE WATER. THE CONTRACTOR SHALL REMOVE THE BRIDGE AND SUBMIT PLANS FOR DEMOLITION IN ACCORDANCE WITH ARTICLE 402-2 OF THE STANDARD SPECIFICATIONS.

THIS STRUCTURE HAS BEEN DESIGNED IN ACCORDANCE WITH "HEC 18-EVALUATING SCOUR AT BRIDGES."

FOR EROSION CONTROL MEASURES, SEE EROSION CONTROL PLANS.

FOR INTERIOR BENTS 1 AND 2, ONLY PARTIAL GALVANIZING OF THE PILES IS REQUIRED. SEE INTERIOR BENTS SHEETS FOR REQUIRED GALVANIZING LENGTHS. PAYMENT FOR PARTIALLY GALVANIZED PILES WILL BE MADE UNDER THE CONTRACT UNIT PRICE FOR GALVANIZED STEEL PILES.

HYDRAULIC DATA

DESIGN DISCHARGE	= 1900 CFS
FREQUENCY OF DESIGN FLOOD	= 50 YR.
DESIGN HIGH WATER ELEVATION	= 26.4'
DRAINAGE AREA	= 19.9 Sq. MILES
BASE DISCHARGE (Q100)	= 2300 CFS
BASE HIGH WATER ELEVATION	= 27.22'

OVERTOPPING FLOOD DATA

OVERTOPPING DISCHARGE	= 2700 CFS
FREQUENCY OF OVERTOPPING FLOOD	= 200 YR.
OVERTOPPING FLOOD ELEVATION	= 28.0'

TOTAL BILL OF MATERIAL

	REMOVAL OF EXISTING STRUCTURE	PDA TESTING	UNCLASSIFIED STRUCTURE EXCAVATION	CONCRETE WEARING SURFACE	GROOVING BRIDGE FLOORS	CLASS A CONCRETE	BRIDGE APPROACH SLABS	REINFORCING STEEL	HP 12 X 53 STEEL PILES		HP 14 X 73 GALVANIZED STEEL PILES		PILE REDRIVES	VERTICAL CONCRETE BARRIER RAIL	CLASS II RIP RAP (2'-0" THICK)	GEOTEXTILE FOR DRAINAGE	ELASTOMERIC BEARINGS	3'-0" X 1'-9" PRESTRESSED CONCRETE CORED SLABS	
	LUMP SUM	EACH	LUMP SUM	SQ. FT.	SQ. FT.	CU. YDS.	LUMP SUM	LBS.	NO.	LIN.FT.	NO.	LIN.FT.	EACH	LIN.FT.	TONS	SQ. YD.	LUMP SUM	NO.	LIN.FT.
SUPERSTRUCTURE				3393	4566		LUMP SUM							200.58			LUMP SUM	36	1200.00
END BENT 1						18.0		2661	7	490			4		128	142			
BENT 1						15.3		2856			8	680	4						
BENT 2						15.3		2856			8	680	4						
END BENT 2						18.0		2661	7	490			4		123	137			
TOTAL	LUMP SUM	2	LUMP SUM	3393	4566	66.6	LUMP SUM	11034	14	980	16	1360	16	200.58	251	279	LUMP SUM	36	1200.00

PROJECT NO. B-5418
PITT COUNTY
STATION: 15+50.00 -L-

SHEET 3 OF 3

STATE OF NORTH CAROLINA
DEPARTMENT OF TRANSPORTATION
RALEIGH

GENERAL DRAWING

FOR BRIDGE OVER JOHNSONS MILL RUN ON NC 33 BETWEEN SR 1418 AND US 264

NORTH CAROLINA PROFESSIONAL SEAL 22005 ENGINEER KEITH PASCHAL
9.18.13

REVISIONS						SHEET NO.
NO.	BY:	DATE:	NO.	BY:	DATE:	S-3
1			3			TOTAL SHEETS
2			4			19

DRAWN BY : PEGGY ADKINS DATE : 8-13-13
CHECKED BY : KEITH PASCHAL DATE : 8-26-13
DESIGN ENGINEER OF RECORD: M. M. AHMED DATE : 8-26-13

13-SEP-2013 07:30
S:\DPGI\Keith\B-5418\padkins\B-5418_SD_GD_01.dgn

LOAD AND RESISTANCE FACTOR RATING (LRFR) SUMMARY FOR PRESTRESSED CONCRETE GIRDERS

LEVEL		VEHICLE	WEIGHT (W) (TONS)	CONTROLLING LOAD RATING (#)	MINIMUM RATING FACTORS (RF)	TONS = W X RF	STRENGTH I LIMIT STATE											SERVICE III LIMIT STATE						COMMENT NUMBER
								MOMENT					SHEAR						MOMENT					
							LIVELOAD FACTORS	DISTRIBUTION FACTORS (DF)	RATING FACTOR	SPAN	GIRDER LOCATION	DISTANCE FROM LEFT END OF SPAN (ft)	DISTRIBUTION FACTORS (DF)	RATING FACTOR	SPAN	GIRDER LOCATION	DISTANCE FROM LEFT END OF SPAN (ft)	LIVELOAD FACTORS	DISTRIBUTION FACTORS (DF)	RATING FACTOR	SPAN	GIRDER LOCATION	DISTANCE FROM LEFT END OF SPAN (ft)	
DESIGN LOAD RATING		HL-93(Inv)	N/A	1	**1.2**	--	1.75	0.251	2.06	B	EL	24.42	0.659	**1.2**	A	EL	**1.192**	0.80	0.251	1.53	B	EL	24.420	
		HL-93(Opr)	N/A	--	1.55	--	1.35	0.251	2.67	B	EL	24.42	0.659	1.55	A	EL	1.192	N/A	--	--	--	--	--	
		HS-20(Inv)	36.000	2	**1.39**	49.986	1.75	0.251	2.56	B	EL	24.42	0.659	**1.39**	A	EL	**1.192**	0.80	0.251	1.89	B	EL	24.420	
		HS-20(Opr)	36.000	--	1.8	64.797	1.35	0.251	3.31	B	EL	24.42	0.659	1.8	A	EL	1.192	N/A	--	--	--	--	--	
LEGAL LOAD RATING	SV	SNSH	13.500	--	3.21	43.337	1.4	0.251	6.5	B	EL	24.42	0.659	3.21	A	EL	1.192	0.80	0.251	3.85	B	EL	24.420	
		SNGARBS2	20.000	--	2.58	51.509	1.4	0.251	5.13	B	EL	24.42	0.659	2.58	A	EL	1.192	0.80	0.251	3.04	B	EL	24.420	
		SNAGRIS2	22.000	--	2.52	55.541	1.4	0.251	4.95	B	EL	19.536	0.659	2.52	A	EL	1.192	0.80	0.251	2.95	B	EL	24.420	
		SNCOTTS3	27.250	--	1.63	44.401	1.4	0.251	3.24	B	EL	24.42	0.659	1.63	A	EL	1.192	0.80	0.251	1.92	B	EL	24.420	
		SNAGGRS4	34.925	--	1.57	54.831	1.4	0.251	2.82	B	EL	24.42	0.659	1.57	A	EL	1.192	0.80	0.251	1.67	B	EL	24.420	
		SNS5A	35.550	--	1.63	57.929	1.4	0.251	2.75	B	EL	24.42	0.659	1.64	A	EL	1.192	0.80	0.251	1.63	B	EL	24.420	
		SNS6A	39.950	--	1.52	60.881	1.4	0.251	2.57	B	EL	24.42	0.659	1.57	A	EL	1.192	0.80	0.251	1.52	B	EL	24.420	
		SNS7B	42.000	--	1.45	60.998	1.4	0.251	2.45	B	EL	24.42	0.659	1.58	A	EL	1.192	0.80	0.251	1.45	B	EL	24.420	
	TTST	TNAGRIT3	33.000	--	1.87	61.613	1.4	0.251	3.15	B	EL	24.42	0.659	1.93	A	EL	1.192	0.80	0.251	1.87	B	EL	24.420	
		TNT4A	33.075	--	1.75	57.803	1.4	0.251	3.18	B	EL	24.42	0.659	1.75	A	EL	1.192	0.80	0.251	1.88	B	EL	24.420	
		TNT6A	41.600	--	1.57	65.276	1.4	0.251	2.65	B	EL	24.42	0.659	1.65	A	EL	1.192	0.80	0.251	1.57	B	EL	24.420	
		TNT7A	42.000	--	1.59	66.905	1.4	0.251	2.69	B	EL	24.42	0.659	1.64	A	EL	1.192	0.80	0.251	1.59	B	EL	24.420	
		TNT7B	42.000	--	1.58	66.472	1.4	0.251	2.8	B	EL	24.42	0.659	1.58	A	EL	1.192	0.80	0.251	1.66	B	EL	24.420	
		TNAGRIT4	43.000	--	1.58	67.773	1.4	0.251	2.66	B	EL	24.42	0.659	1.58	A	EL	1.192	0.80	0.251	1.58	B	EL	24.420	
		TNAGT5A	45.000	--	1.47	66.248	1.4	0.251	2.48	B	EL	24.42	0.659	1.61	A	EL	1.192	0.80	0.251	1.47	B	EL	24.420	
		TNAGT5B	45.000	3	**1.44**	64.901	1.4	0.251	2.43	B	EL	24.42	0.659	1.46	A	EL	1.192	0.80	0.251	**1.44**	B	EL	**24.420**	

LOAD FACTORS:

DESIGN LOAD RATING FACTORS	LIMIT STATE	γ_{DC}	γ_{DW}
	STRENGTH I	1.25	1.50
	SERVICE III	1.00	1.00

NOTES:

MINIMUM RATING FACTORS ARE BASED ON THE STRENGTH I AND SERVICE III LIMIT STATES.

ALLOWABLE STRESSES FOR SERVICE III LIMIT STATE ARE AS REQUIRED FOR DESIGN.

COMMENTS:

1.
2.
3.
4.

(#) CONTROLLING LOAD RATING

(1) DESIGN LOAD RATING (HL-93)

(2) DESIGN LOAD RATING (HS-20)

(3) LEGAL LOAD RATING **

** SEE CHART FOR VEHICLE TYPE

GIRDER LOCATION

I - INTERIOR GIRDER
EL - EXTERIOR LEFT GIRDER
ER - EXTERIOR RIGHT GIRDER

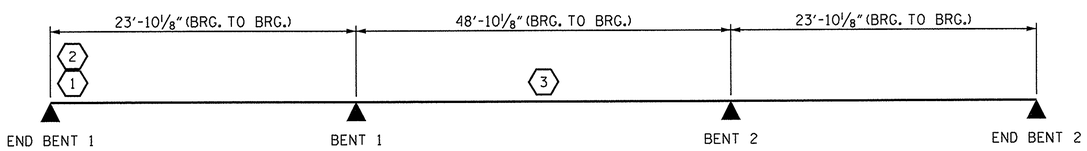

LRFR SUMMARY

PROJECT NO. B-5418
PITT COUNTY
STATION: 15+50.00 -L-

STATE OF NORTH CAROLINA
DEPARTMENT OF TRANSPORTATION
RALEIGH

STANDARD
LRFR SUMMARY FOR PRESTRESSED CONCRETE GIRDERS
(NON-INTERSTATE TRAFFIC)

NORTH CAROLINA PROFESSIONAL SEAL 22005 ENGINEER KEITH PASCHAL
9.18.13

REVISIONS								SHEET NO.
NO.	BY:	DATE:	NO.	BY:	DATE:			S-4
1			3					TOTAL SHEETS
2			4					19

STD. NO. LRFR1

ASSEMBLED BY : M.M. AHMED DATE : 8/27/13
CHECKED BY : M.L. RORIE, P.E. DATE : 8/28/13
DESIGN ENGINEER OF RECORD: M.M. AHMED DATE : 8/28/13

DRAWN BY : MAA 1/08
CHECKED BY : GM/DI 2/08

REV. 11/12/08RR MAA/GM
REV. 10/1/11 MAA/GM

13-SEP-2013 07:29
S:\DPGI\Keith\B-5418\mmo\B_5418_SD_TS.dgn
kpaschal

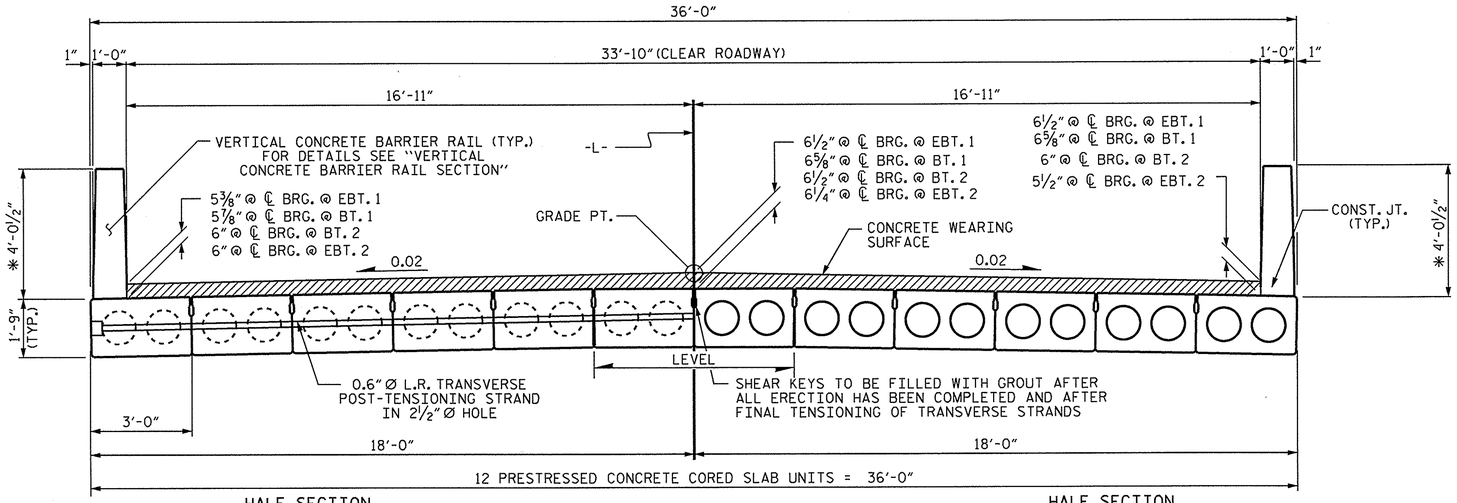

HALF SECTION
AT INTERMEDIATE DIAPHRAGMS

HALF SECTION
THROUGH VOIDS

TYPICAL SECTION

* - THE MAXIMUM BARRIER RAIL HEIGHT AND CONCRETE THICKNESS IS SHOWN. THE HEIGHT OF THE BARRIER RAIL AND CONCRETE THICKNESS VARIES WHILE THE TOP OF THE BARRIER RAIL FOLLOWS THE PROFILE OF THE GUTTERLINE. FOR RAIL HEIGHT DETAILS AND CONCRETE THICKNESS SEE THE "VERTICAL CONCRETE BARRIER RAIL SECTION" DETAIL.

FIXED END

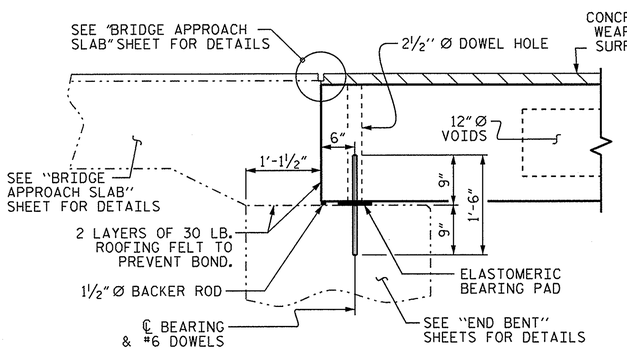

SECTION AT END BENT

FIXED END FIXED END

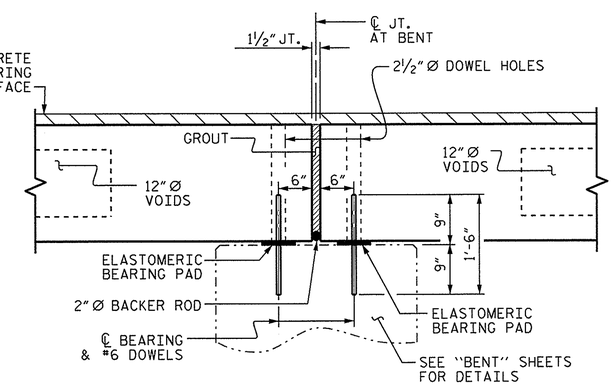

SECTION AT BENT

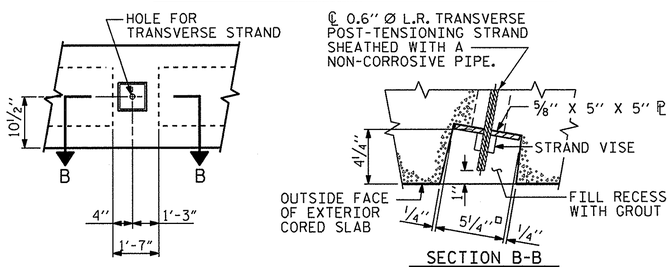

GROUTED RECESS AT END OF POST-TENSIONED STRAND OF CORED SLABS

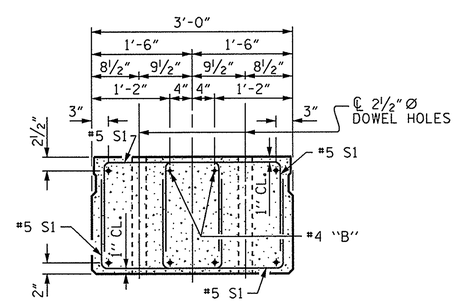

END ELEVATION

SHOWING PLACEMENT OF DOUBLE STIRRUPS AND LOCATION OF DOWEL HOLES. (STRAND LAYOUT NOT SHOWN.) INTERIOR SLAB UNIT SHOWN-EXTERIOR SLAB UNIT SIMILAR EXCEPT SHEAR KEY LOCATION.

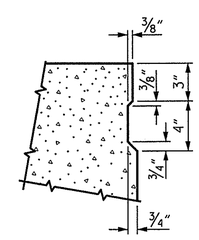

SHEAR KEY DETAIL

NOTE: OMIT SHEAR KEY ON OUTSIDE FACE OF EXTERIOR CORED SLABS.

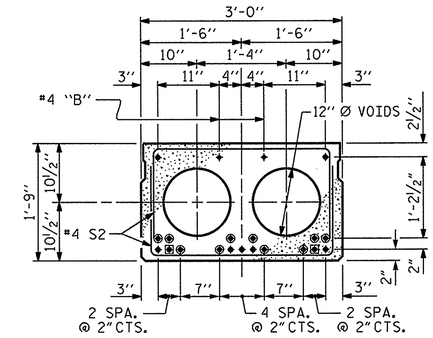

INTERIOR SLAB SECTION
(25' UNIT)
(9 STRANDS REQUIRED)

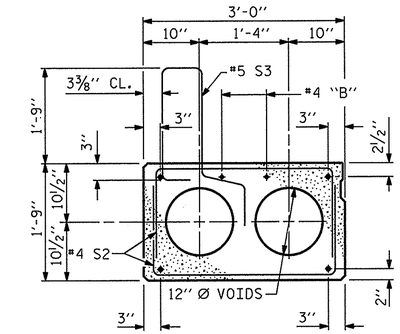

EXT. SLAB SECTION

(FOR PRESTRESSED STRAND LAYOUT, SEE INTERIOR SLAB SECTION.)

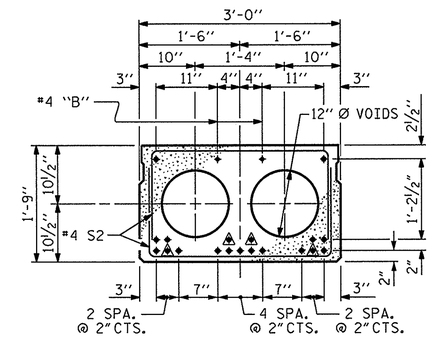

INTERIOR SLAB SECTION
(50' UNIT)
(19 STRANDS REQUIRED)

0.6" Ø LOW RELAXATION STRAND LAYOUT

▲ BOND SHALL BE BROKEN ON THESE STRANDS FOR A DISTANCE OF 6'-0" FROM END OF CORED SLAB UNIT. SEE STANDARD SPECIFICATIONS, ARTICLE 1078-7.

◉ BOND SHALL BE BROKEN ON THESE STRANDS FOR A DISTANCE OF 2'-0" FROM END OF CORED SLAB UNIT. SEE STANDARD SPECIFICATIONS, ARTICLE 1078-7.

◉ OPTIONAL FULL LENGTH DEBONDED STRANDS. THESE STRANDS ARE NOT REQUIRED. IF THE FABRICATOR CHOOSES TO INCLUDE THESE STRANDS IN THE CORED SLAB UNIT, THE STRANDS SHALL BE DEBONDED FOR THE FULL LENGTH OF THE UNIT AT NO ADDITIONAL COST. SEE STANDARD SPECIFICATIONS, ARTICLE 1078-7.

DEBONDING LEGEND

PROJECT NO. B-5418
PITT COUNTY
STATION: 15+50.00 -L-

SHEET 1 OF 5

STATE OF NORTH CAROLINA
DEPARTMENT OF TRANSPORTATION
RALEIGH

STANDARD
3'-0" X 1'-9"
PRESTRESSED CONCRETE CORED SLAB UNIT
120° SKEW

NORTH CAROLINA PROFESSIONAL SEAL 22005 ENGINEER KEITH PASCHAL
9.18.13

REVISIONS							
NO.	BY:	DATE:	NO.	BY:	DATE:	SHEET NO.	S-5
1			3			TOTAL SHEETS	19
2			4				

ASSEMBLED BY :	M.M. AHMED	DATE :	6/12/13
CHECKED BY :	M.L. RORIE, P.E.	DATE :	8/6/13
DESIGN ENGINEER OF RECORD:	M.M. AHMED	DATE :	8/21/13

DRAWN BY : DGE 5/09
CHECKED BY : BCH 6/09
REV. 12/11 MAA/AAC

13-SEP-2013 07:28
S:\DPGI\Keith\B-5418\mmo\B_5418_SD_TS.dgn
kpaschal

STD. NO. 21" PCS2_36_120S

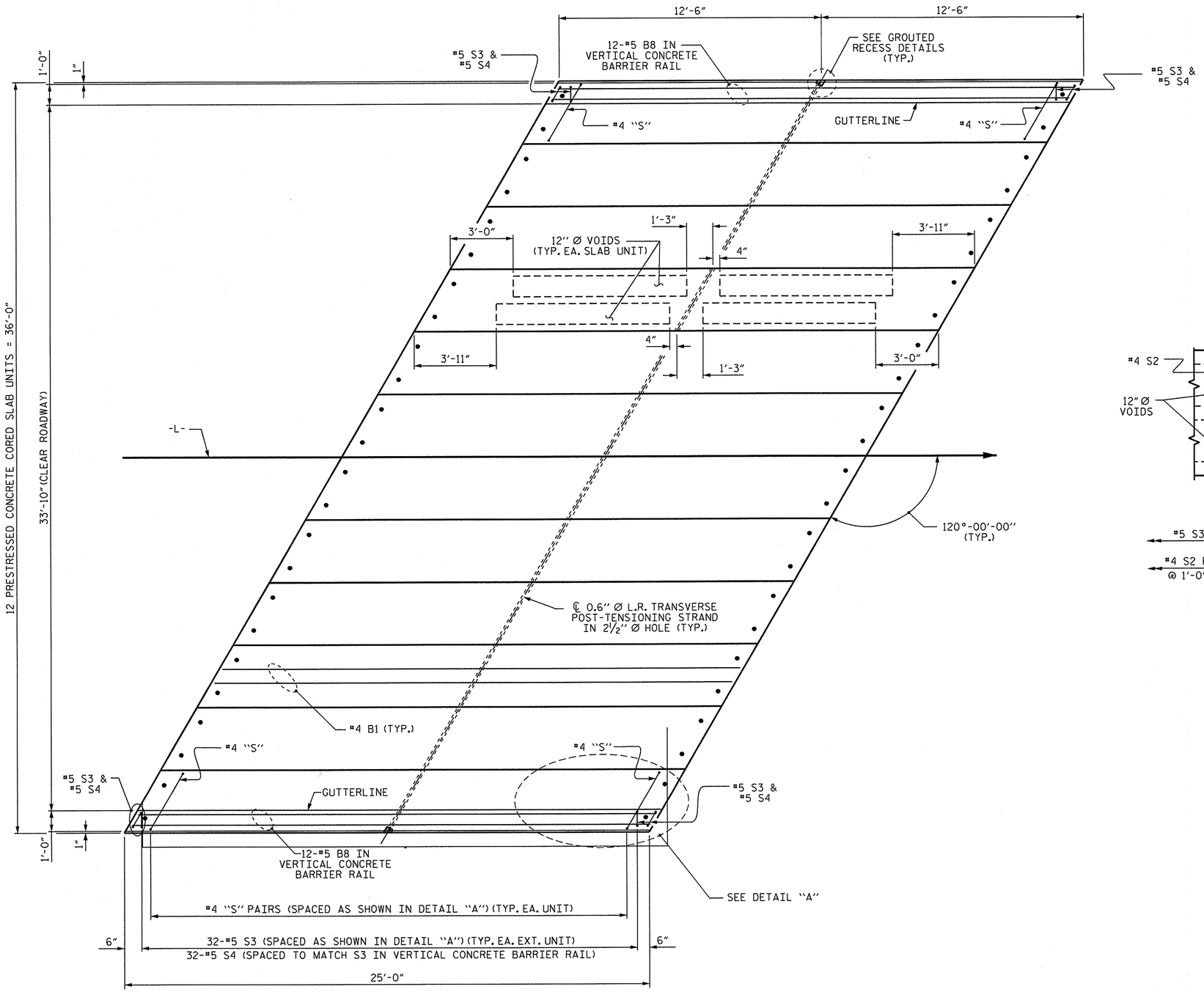

PLAN OF UNIT

(NO DECK DRAINS REQUIRED)

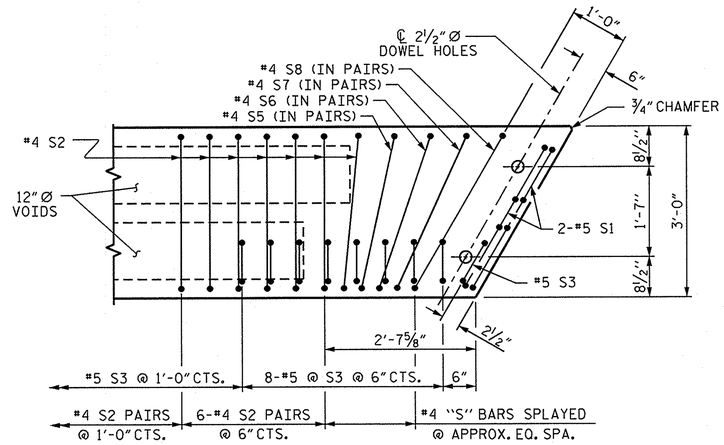

DETAIL "A"

NOTE: EXTERIOR UNIT SHOWN - INTERIOR UNIT SIMILAR EXCEPT OMIT #5 S3 BARS.

PROJECT NO. B-5418

PITT COUNTY

STATION: 15+50.00 -L-

SHEET 2 OF 5

STATE OF NORTH CAROLINA
DEPARTMENT OF TRANSPORTATION
RALEIGH

PLAN OF 25' UNIT 33'-10" CLEAR ROADWAY 120° SKEW

NORTH CAROLINA PROFESSIONAL SEAL 22005 ENGINEER KEITH PASCHAL
9-18-13

REVISIONS						SHEET NO.
NO.	BY:	DATE:	NO.	BY:	DATE:	S-6
1			3			TOTAL SHEETS
2			4			19

ASSEMBLED BY : M.M. AHMED		DATE : 6/12/13	
CHECKED BY : M.L. RORIE, P.E.		DATE : 8/6/13	
DRAWN BY : DGE 5/09	REV. 12/5/11 MAA/AAC		
CHECKED BY: BCH 6/09			

13-SEP-2013 07:27
S:\DPG1\Keith\B-5418\mma\B_5418_SD_TS.dgn
kpaschal

STD. NO. 21" PCS_36_120S_25L

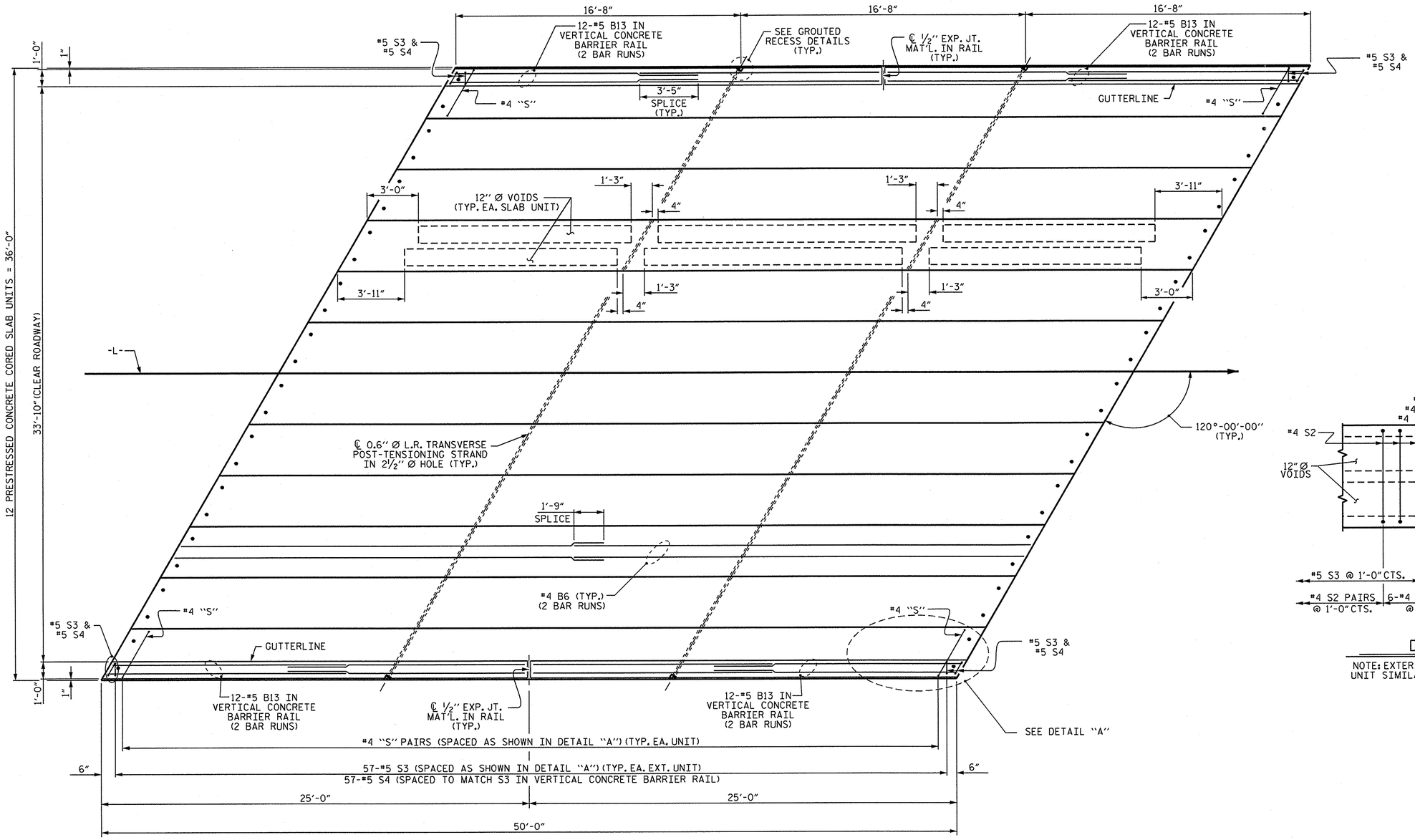

PLAN OF UNIT

(NO DECK DRAINS REQUIRED)

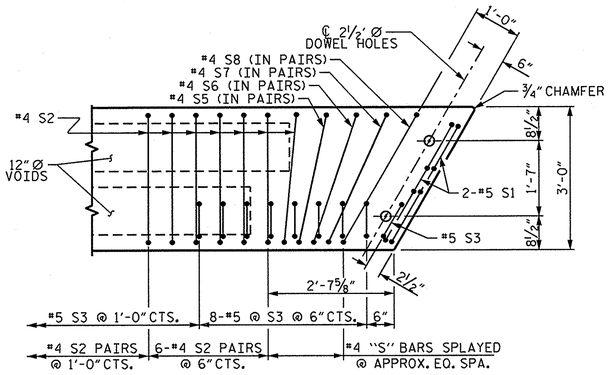

DETAIL "A"

NOTE: EXTERIOR UNIT SHOWN - INTERIOR UNIT SIMILAR EXCEPT OMIT #5 S3 BARS.

PROJECT NO. B-5418

PITT COUNTY

STATION: 15+50.00 -L-

SHEET 3 OF 5

STATE OF NORTH CAROLINA
DEPARTMENT OF TRANSPORTATION
RALEIGH

PLAN OF 50' UNIT
33'-10" CLEAR ROADWAY
120° SKEW

NORTH CAROLINA PROFESSIONAL SEAL 22002 ENGINEER KEITH PASCHAL
9.18.13

REVISIONS							SHEET NO.
NO.	BY:	DATE:	NO.	BY:	DATE:		S-7
1			3				TOTAL SHEETS
2			4				19

ASSEMBLED BY :	M.M. AHMED	DATE :	6/12/13
CHECKED BY :	M.L. RORIE, P.E.	DATE :	8/6/13
DRAWN BY :	DGE 5/09	REV. 12/5/11	MAA/AAC
CHECKED BY:	BCH 6/09		

13-SEP-2013 07:27
S:\DPGI\Keith\B-5418\mma\B_5418_SD_TS.dgn
Kpaschal

STD. NO. 21" PCS_36_120S_50L

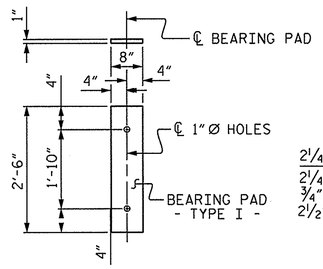

FIXED END
(TYPE I - 72 REQ'D)

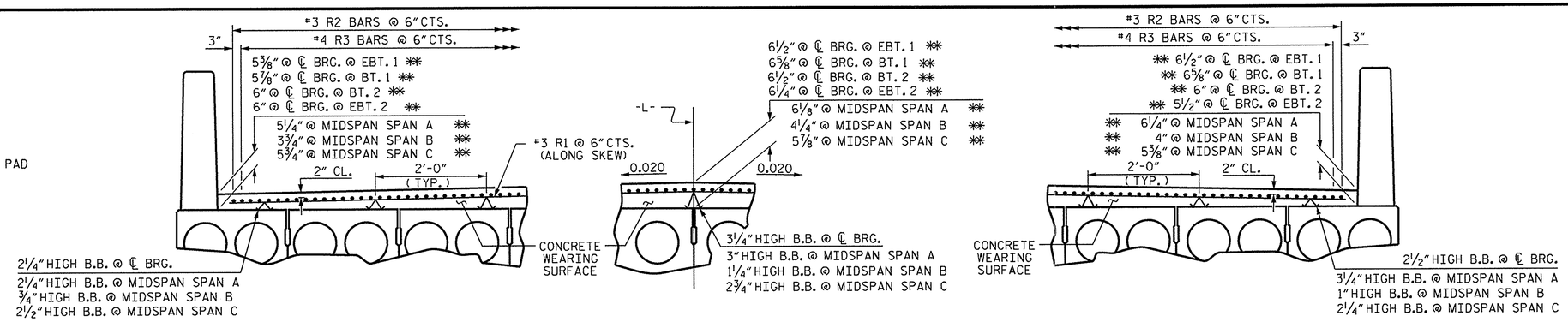

REINFORCING STEEL FOR CONCRETE WEARING SURFACE

✱✱ BASED ON PREDICTED FINAL CAMBER AND THEORETICAL GRADE LINE ELEVATIONS

ELASTOMERIC BEARING DETAILS

ELASTOMER IN ALL BEARINGS SHALL BE 50 DUROMETER HARDNESS.

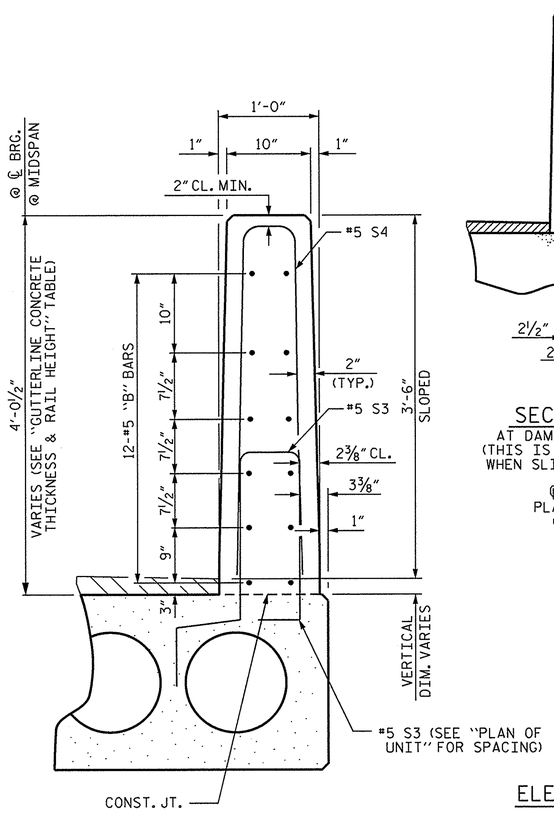

VERTICAL CONCRETE BARRIER RAIL SECTION

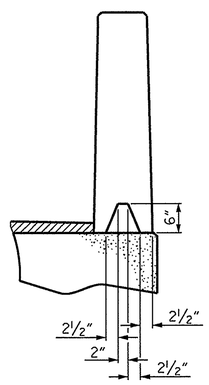

SECTION S-S
AT DAM IN OPEN JOINT
(THIS IS TO BE USED ONLY WHEN SLIP FORM IS USED)

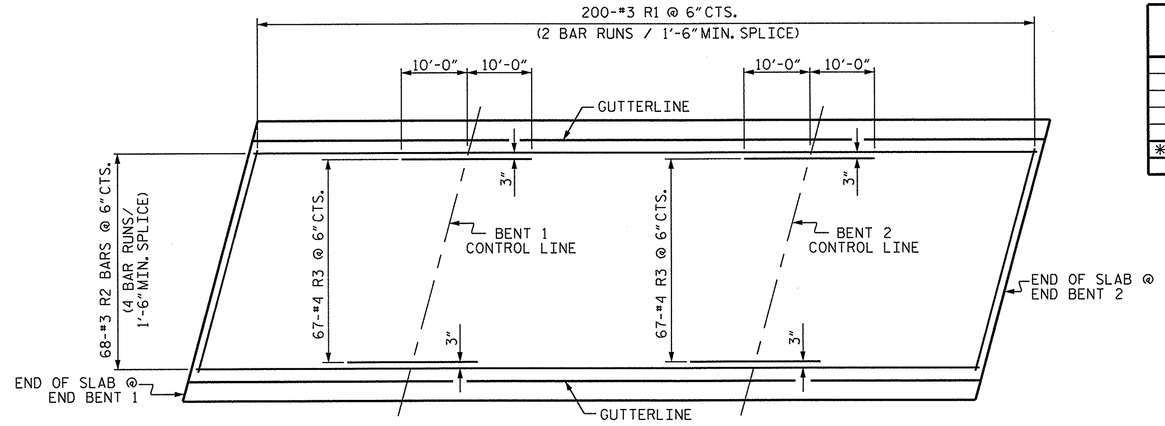

PLAN SHOWING CONCRETE WEARING SURFACE REINFORCING STEEL

BILL OF MATERIAL FOR CONCRETE WEARING SURFACE					
BAR	NO.	SIZE	TYPE	LENGTH	WEIGHT
✱R1	400	#3	STR	20'-0"	3008
✱R2	272	#3	STR	26'-1"	2668
✱R3	134	#4	STR	20'-0"	1790
✱EPOXY COATED REINFORCING STEEL				LBS.	7466
CONCRETE WEARING SURFACE				SQ. FT.	3393

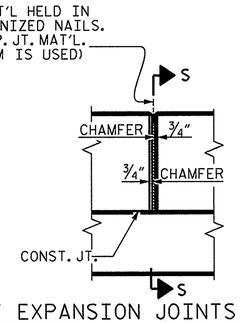

ELEVATION AT EXPANSION JOINTS

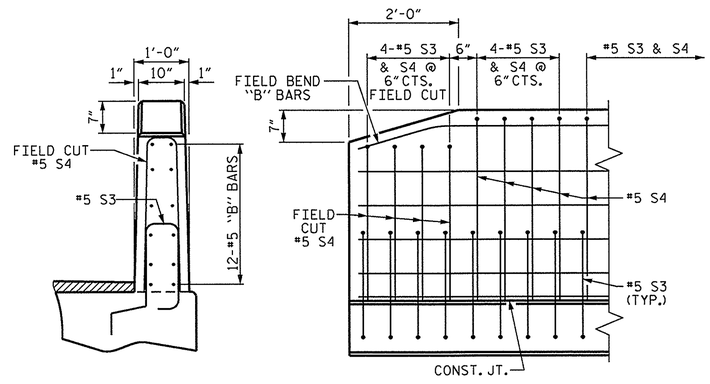

END VIEW

SIDE VIEW

END OF RAIL DETAILS

PROJECT NO. B-5418
PITT COUNTY
STATION: 15+50.00 -L-

SHEET 4 OF 5

STATE OF NORTH CAROLINA
DEPARTMENT OF TRANSPORTATION
RALEIGH

STANDARD
3'-0" X 1'-9"
PRESTRESSED CONCRETE
CORED SLAB UNIT
120° SKEW

NORTH CAROLINA PROFESSIONAL SEAL 22005 ENGINEER KEITH PASCHAL
9.18.13

REVISIONS						SHEET NO.
NO.	BY:	DATE:	NO.	BY:	DATE:	S-8
1			3			TOTAL SHEETS
2			4			19

ASSEMBLED BY :	M.M. AHMED	DATE :	6/12/13
CHECKED BY :	M.L. RORIE, P.E.	DATE :	8/7/13
DESIGN ENGINEER OF RECORD:	M.M. AHMED	DATE :	8/21/13

DRAWN BY : DGE 5/09
CHECKED BY : BCH 6/09
REV. 12/11 MAA/AAC

13-SEP-2013 07:27
S:\DPGI\Keith\B-5418\mma\B_5418_SD_TS.dgn
kpaschal

STD. NO. 21" PCS3_36_120S

BILL OF MATERIAL FOR ONE 25' CORED SLAB UNIT

BAR	NUMBER	SIZE	TYPE	EXTERIOR UNIT LENGTH	EXTERIOR UNIT WEIGHT	INTERIOR UNIT LENGTH	INTERIOR UNIT WEIGHT
B1	2	#4	STR	24'-7"	33	24'-7"	33
S1	8	#5	3	4'-6"	38	4'-6"	38
S2	52	#4	3	5'-4"	185	5'-4"	185
* S3	34	#5	1	6'-4"	225		
S5	4	#4	3	5'-5"	14	5'-5"	14
S6	4	#4	3	5'-6"	15	5'-6"	15
S7	4	#4	3	5'-7"	15	5'-7"	15
S8	4	#4	3	5'-9"	15	5'-9"	15
REINFORCING STEEL			LBS.		315		315
* EPOXY COATED REINFORCING STEEL			LBS.		225		
5000 P.S.I. CONCRETE			CU. YDS.		3.8		3.8
0.6" Ø L.R. STRANDS			No.		9		9

BILL OF MATERIAL FOR ONE 50' CORED SLAB UNIT

BAR	NUMBER	SIZE	TYPE	EXTERIOR UNIT LENGTH	EXTERIOR UNIT WEIGHT	INTERIOR UNIT LENGTH	INTERIOR UNIT WEIGHT
B6	4	#4	STR	25'-9"	69	25'-9"	69
S1	8	#5	3	4'-6"	38	4'-6"	38
S2	102	#4	3	5'-4"	363	5'-4"	363
* S3	59	#5	1	6'-4"	390		
S5	4	#4	3	5'-5"	14	5'-5"	14
S6	4	#4	3	5'-6"	15	5'-6"	15
S7	4	#4	3	5'-7"	15	5'-7"	15
S8	4	#4	3	5'-9"	15	5'-9"	15
REINFORCING STEEL			LBS.		529		529
* EPOXY COATED REINFORCING STEEL			LBS.		390		
9000 P.S.I. CONCRETE			CU. YDS.		7.3		7.3
0.6" Ø L.R. STRANDS			No.		19		19

DEAD LOAD DEFLECTION AND CAMBER

	3'-0" x 1'-9"
25' CORED SLAB UNIT	0.6" Ø L.R. STRAND
CAMBER (SLAB ALONE IN PLACE)	5/16" ↑
DEFLECTION DUE TO CONCRETE WEARING SURFACE	- ↓
FINAL CAMBER	5/16" ↑

DEAD LOAD DEFLECTION AND CAMBER

	3'-0" x 1'-9"
50' CORED SLAB UNIT	0.6" Ø L.R. STRAND
CAMBER (SLAB ALONE IN PLACE)	2" ↑
DEFLECTION DUE TO CONCRETE WEARING SURFACE	3/16" ↓
FINAL CAMBER	1 13/16" ↑

BAR TYPES

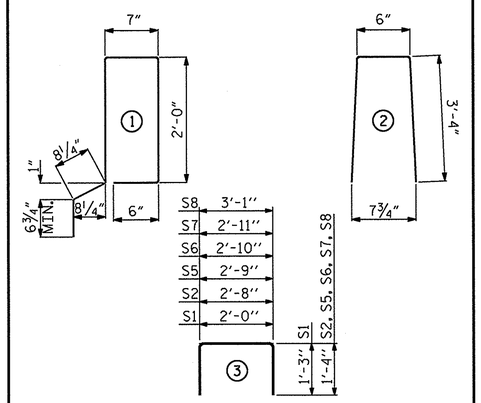

ALL BAR DIMENSIONS ARE OUT TO OUT

NOTES

ALL PRESTRESSING STRANDS SHALL BE 7-WIRE LOW RELAXATION GRADE 270 STRANDS AND SHALL CONFORM TO AASHTO M203 EXCEPT FOR SAMPLING REQUIREMENTS WHICH SHALL BE IN ACCORDANCE WITH THE STANDARD SPECIFICATIONS.

ALL REINFORCING STEEL CAST WITH THE CORED SLAB SECTIONS SHALL BE GRADE 60 AND SHALL BE INCLUDED IN THE UNIT PRICE BID FOR PRESTRESSED CONCRETE CORED SLABS.

RECESSES FOR TRANSVERSE STRANDS SHALL BE GROUTED AFTER THE TENSIONING OF THE STRANDS.

THE 2 1/2" Ø DOWEL HOLES AT FIXED ENDS OF SLAB SECTIONS SHALL BE FILLED WITH NON-SHRINK GROUT.

THE BACKER RODS SHALL CONFORM TO THE REQUIREMENTS OF TYPE M BOND BREAKER. SEE SECTION 1028 OF THE STANDARD SPECIFICATIONS.

WHEN CORED SLABS ARE CAST, AN INTERNAL HOLD-DOWN SYSTEM SHALL BE EMPLOYED TO PREVENT VOIDS FROM RISING OR MOVING SIDEWAYS. AT LEAST SIX WEEKS PRIOR TO CASTING CORED SLABS, THE CONTRACTOR SHALL SUBMIT TO THE ENGINEER FOR REVIEW AND COMMENT, DETAILED DRAWINGS OF THE PROPOSED HOLD-DOWN SYSTEM. IN ADDITION TO STRUCTURAL DETAILS, LOCATION AND SPACING OF THE HOLD-DOWNS SHALL BE INDICATED.

ALL REINFORCING STEEL IN THE VERTICAL CONCRETE BARRIER RAIL SHALL BE EPOXY COATED.

PRESTRESSING STRANDS SHALL BE CUT FLUSH WITH THE CORED SLAB UNIT ENDS.

APPLY EPOXY PROTECTIVE COATING TO CORED SLAB UNIT ENDS.

GROOVED CONTRACTION JOINTS, 1/2" IN DEPTH, SHALL BE TOOLED IN ALL EXPOSED FACES OF THE BARRIER RAIL AND IN ACCORDANCE WITH ARTICLE 825-10(B) OF THE STANDARD SPECIFICATIONS. A CONTRACTION JOINT SHALL BE LOCATED AT EACH THIRD POINT BETWEEN BARRIER RAIL EXPANSION JOINTS. ONLY ONE CONTRACTION JOINT IS REQUIRED AT MIDPOINT OF BARRIER RAIL SEGMENTS LESS THAN 20 FEET IN LENGTH AND NO CONTRACTION JOINTS ARE REQUIRED FOR THOSE SEGMENTS LESS THAN 10 FEET IN LENGTH.

TRANSVERSE POST TENSIONING OF THE CORED SLAB UNITS SHALL BE DONE IN ACCORDANCE WITH THE STANDARD SPECIFICATIONS.

THE TRANSFER OF LOAD FROM THE ANCHORAGES TO THE CORED SLAB UNIT SHALL BE DONE WHEN THE CONCRETE HAS REACHED A COMPRESSIVE STRENGTH OF NOT LESS THAN THE REQUIRED STRENGTH SHOWN IN THE "CONCRETE RELEASE STRENGTH" TABLE.

PLACEMENT OF THE CONCRETE WEARING SURFACE SHALL OCCUR AFTER CASTING THE CONCRETE RAIL. THE COST OF THE #3 BARS CAST WITH THE CONCRETE WEARING SURFACE SHALL BE INCLUDED IN THE UNIT PRICE BID FOR CONCRETE WEARING SURFACE. FOR CONCRETE WEARING SURFACE, SEE SPECIAL PROVISIONS.

FOR GROUT FOR STRUCTURES, SEE SPECIAL PROVISIONS.

GUTTERLINE CONCRETE THICKNESS & RAIL HEIGHT

33'-10" CLEAR ROADWAY	CONCRETE OVERLAY THICKNESS @ MID-SPAN	RAIL HEIGHT @ MID-SPAN
25' UNIT, SPAN A (LEFT)	5 1/4"	3'-7 1/4"
25' UNIT, SPAN A (RIGHT)	6 1/4"	3'-6 1/4"
50' UNIT, SPAN B (LEFT)	3 3/4"	3'-8 3/4"
50' UNIT, SPAN B (RIGHT)	4"	3'-8 1/2"
25' UNIT, SPAN C (LEFT)	5 3/4"	3'-6 3/4"
25' UNIT, SPAN C (RIGHT)	5 3/8"	3'-7 1/8"

BILL OF MATERIAL FOR VERTICAL CONCRETE BARRIER RAIL

BAR	BARS PER PAIR OF EXTERIOR UNITS	TOTAL NO.	SIZE	TYPE	LENGTH	WEIGHT
	25' UNIT					
* B8	24	48	#5	STR	24'-6"	1227
* S4	68	136	#5	2	7'-2"	1016
* EPOXY COATED REINFORCING STEEL				LBS.		2243
CLASS AA CONCRETE				CU.YDS.		13.8
TOTAL VERTICAL CONCRETE BARRIER RAIL				LN. FT.		100.29

BILL OF MATERIAL FOR VERTICAL CONCRETE BARRIER RAIL

BAR	BARS PER PAIR OF EXTERIOR UNITS	TOTAL NO.	SIZE	TYPE	LENGTH	WEIGHT
	50' UNIT					
* B13	96	96	#5	STR	14'-3"	1427
* S4	118	118	#5	2	7'-2"	882
* EPOXY COATED REINFORCING STEEL				LBS.		2309
CLASS AA CONCRETE				CU.YDS.		13.4
TOTAL VERTICAL CONCRETE BARRIER RAIL				LN. FT.		100.29

CONCRETE RELEASE STRENGTH

UNIT	PSI
25' UNITS	4000
50' UNITS	4900

GRADE 270 STRANDS

	0.6" Ø L.R.
AREA (SQUARE INCHES)	0.217
ULTIMATE STRENGTH (LBS. PER STRAND)	58,600
APPLIED PRESTRESS (LBS. PER STRAND)	43,950

CORED SLABS REQUIRED

	NUMBER	LENGTH	TOTAL LENGTH
25' UNIT			
EXTERIOR C.S.	4	25'-0"	100'-0"
INTERIOR C.S.	20	25'-0"	500'-0"
TOTAL	24		600'-0"

CORED SLABS REQUIRED

	NUMBER	LENGTH	TOTAL LENGTH
50' UNIT			
EXTERIOR C.S.	2	50'-0"	100'-0"
INTERIOR C.S.	10	50'-0"	500'-0"
TOTAL	12		600'-0"

GROOVING BRIDGE FLOORS

APPROACH SLABS	1486	SQ.FT.
BRIDGE DECK	3080	SQ.FT.
TOTAL	4566	SQ.FT.

PROJECT NO. B-5418
PITT COUNTY
STATION: 15+50.50 -L-

SHEET 5 OF 5

STATE OF NORTH CAROLINA
DEPARTMENT OF TRANSPORTATION
RALEIGH

3'-0" X 1'-9" PRESTRESSED CONCRETE CORED SLAB UNIT 120° SKEW

NORTH CAROLINA PROFESSIONAL SEAL 22008 ENGINEER M. KEITH PASCHAL
9.18.13

ASSEMBLED BY :	M.M. AHMED	DATE :	6/12/13
CHECKED BY :	M.L. RORIE, P.E.	DATE :	8/8/13
DESIGN ENGINEER OF RECORD:	M.M. AHMED	DATE :	8/21/13

DRAWN BY : DGE 5/09
CHECKED BY : BCH 6/09
REV. 12/11 MAA/AAC

REVISIONS								SHEET NO.
NO.	BY:	DATE:	NO.	BY:	DATE:			S-9
1			3					TOTAL SHEETS
2			4					19

13-SEP-2013 07:27
S:\DPG1\Keith\B-5418\mmo\B_5418_SD_TS.dgn
kpaschal

STD. NO. 21" PCS3_36_120S

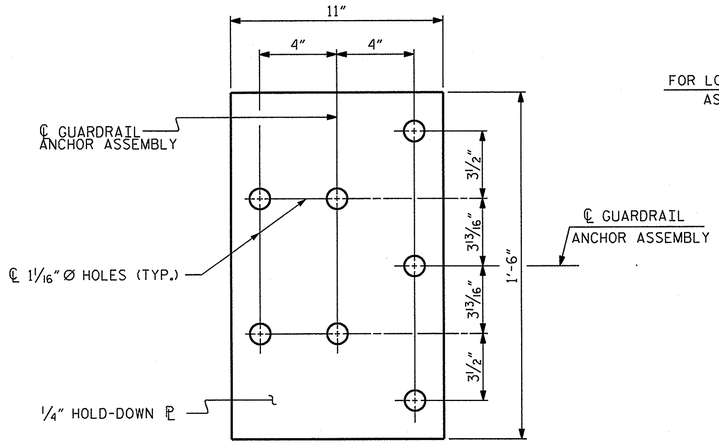

PLAN

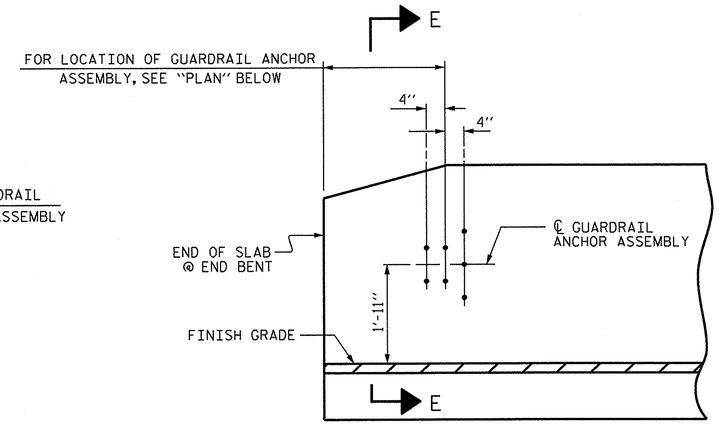

ELEVATION

NOTES

THE GUARDRAIL ANCHOR ASSEMBLY SHALL CONSIST OF A 1/4" HOLD DOWN PLATE AND 7 - 7/8" Ø BOLTS WITH NUTS AND WASHERS.

THE HOLD-DOWN PLATE SHALL CONFORM TO AASHTO M270 GRADE 36. AFTER FABRICATION, THE HOLD-DOWN PLATE SHALL BE HOT-DIP GALVANIZED IN ACCORDANCE WITH AASHTO M111.

BOLTS SHALL CONFORM TO THE REQUIREMENTS OF ASTM A307 AND NUTS SHALL CONFORM TO THE REQUIREMENTS OF AASHTO M291. BOLTS, NUTS AND WASHERS SHALL BE GALVANIZED. (AT THE CONTRACTOR'S OPTION, STAINLESS STEEL BOLTS, NUTS AND WASHERS MAY BE USED AS AN ALTERNATE FOR THE 7/8" Ø GALVANIZED BOLTS, NUTS AND WASHERS. THEY SHALL CONFORM TO OR EXCEED THE MECHANICAL REQUIREMENTS OF ASTM A307. THE USE OF THIS ALTERNATE SHALL BE APPROVED BY THE ENGINEER.)

THE GUARDRAIL ANCHOR ASSEMBLY IS REQUIRED AT ALL POINTS WHERE APPROACH GUARDRAIL IS TO BE ATTACHED TO THE END OF BARRIER RAIL. FOR POINTS OF ATTACHMENT, SEE SKETCH.

AFTER INSTALLATION, THE EXPOSED THREAD OF THE BOLT SHALL BE BURRED WITH A SHARP POINTED TOOL.

THE COST OF THE GUARDRAIL ANCHOR ASSEMBLY SHALL BE INCLUDED IN THE UNIT CONTRACT PRICE BID FOR VERTICAL CONCRETE BARRIER RAIL.

THE VERTICAL REINFORCING BARS MAY BE SHIFTED SLIGHTLY IN THE VERTICAL CONCRETE BARRIER RAIL TO CLEAR ASSEMBLY BOLTS.

THE 1 1/4" Ø HOLES SHALL BE FORMED OR DRILLED WITH A CORE BIT. IMPACT TOOLS WILL NOT BE PERMITTED. ANY CONCRETE DAMAGED BY THIS WORK SHALL BE REPAIRED TO THE SATISFACTION OF THE ENGINEER.

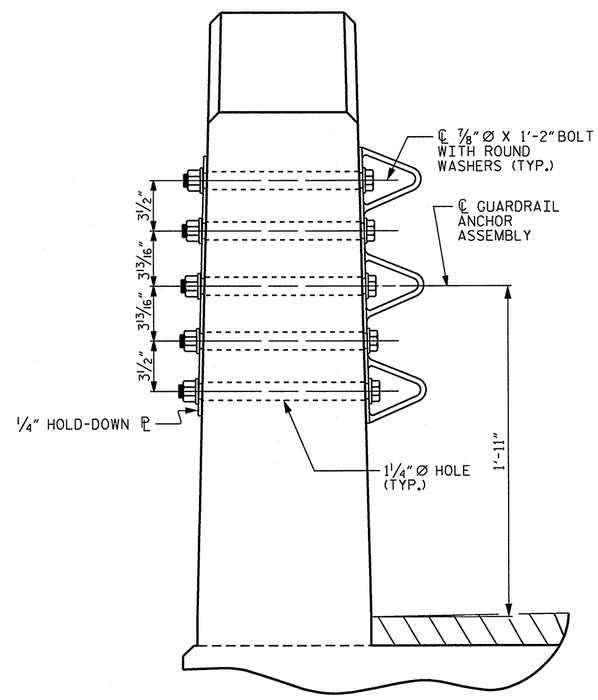

SECTION E-E

GUARDRAIL ANCHOR ASSEMBLY DETAILS

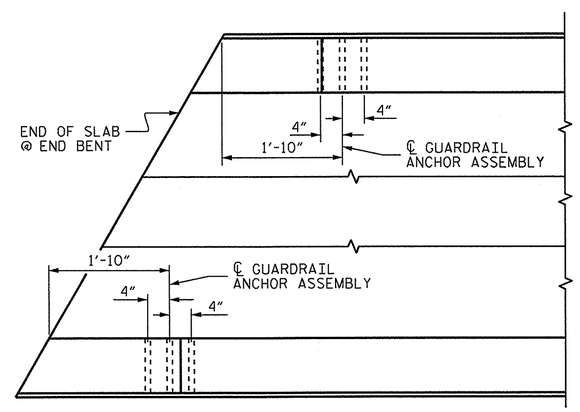

PLAN

LOCATION OF ANCHORS FOR GUARDRAIL

END BENT 1 SHOWN, END BENT 2 SIMILAR.

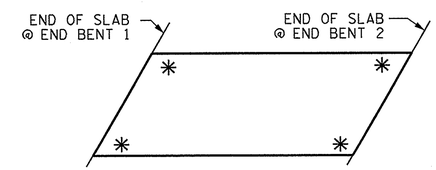

SKETCH SHOWING POINTS OF ATTACHMENT

✳ DENOTES GUARDRAIL ANCHOR ASSEMBLY

PROJECT NO. B-5418
PITT COUNTY
STATION: 15+50.50 -L-

STATE OF NORTH CAROLINA
DEPARTMENT OF TRANSPORTATION
RALEIGH

STANDARD
GUARDRAIL ANCHORAGE FOR VERTICAL CONCRETE BARRIER RAIL

NORTH CAROLINA PROFESSIONAL SEAL 12009 ENGINEER KEITH PASCHAL
9-18-13

REVISIONS						SHEET NO.
NO.	BY:	DATE:	NO.	BY:	DATE:	S-10
1			3			TOTAL SHEETS
2			4			19

ASSEMBLED BY : M.M. AHMED DATE : 6-12-13
CHECKED BY : M.L. RORIE, P.E. DATE : 8/8/13

DRAWN BY : MAA 5/10
CHECKED BY : GM 5/10

REV. 10/1/11 MAA/GM
REV. 12/5/11 MAA/GM
REV. 6/13 MAA/GM

13-SEP-2013 07:26
S:\DPGI\Keith\B-5418\mmo\B_5418_SD_TS.dgn
kpaschal

(SHT 2) STD. NO. GRA3

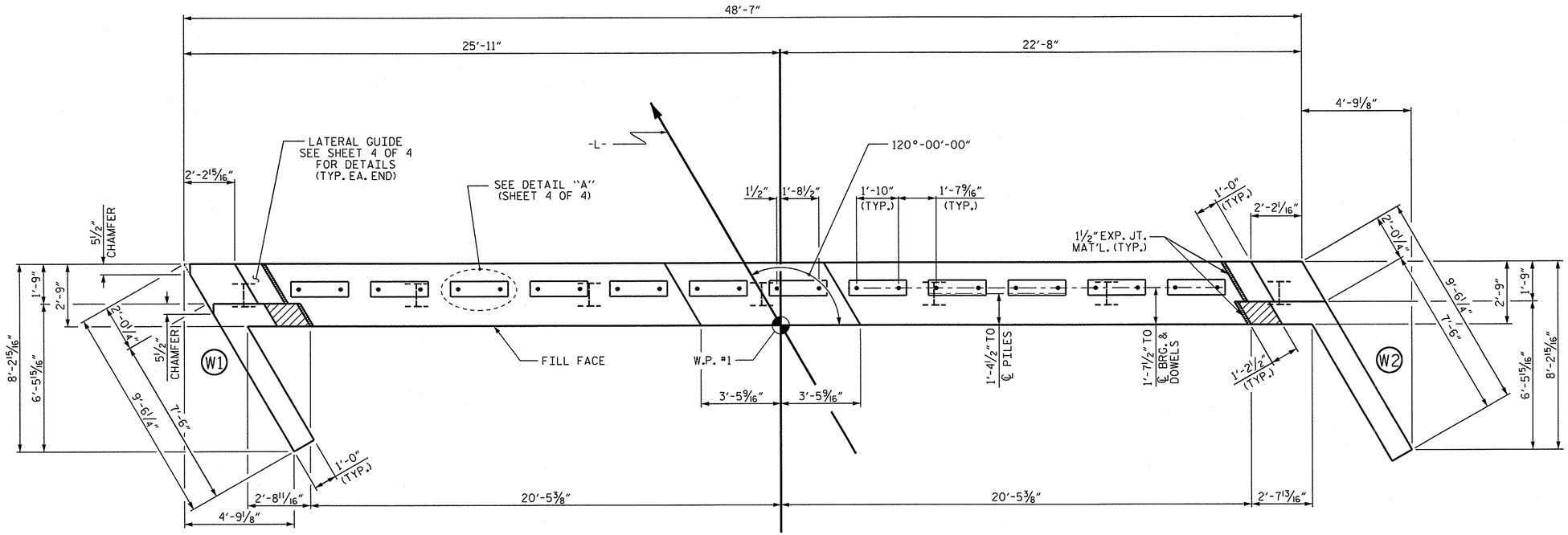

PLAN

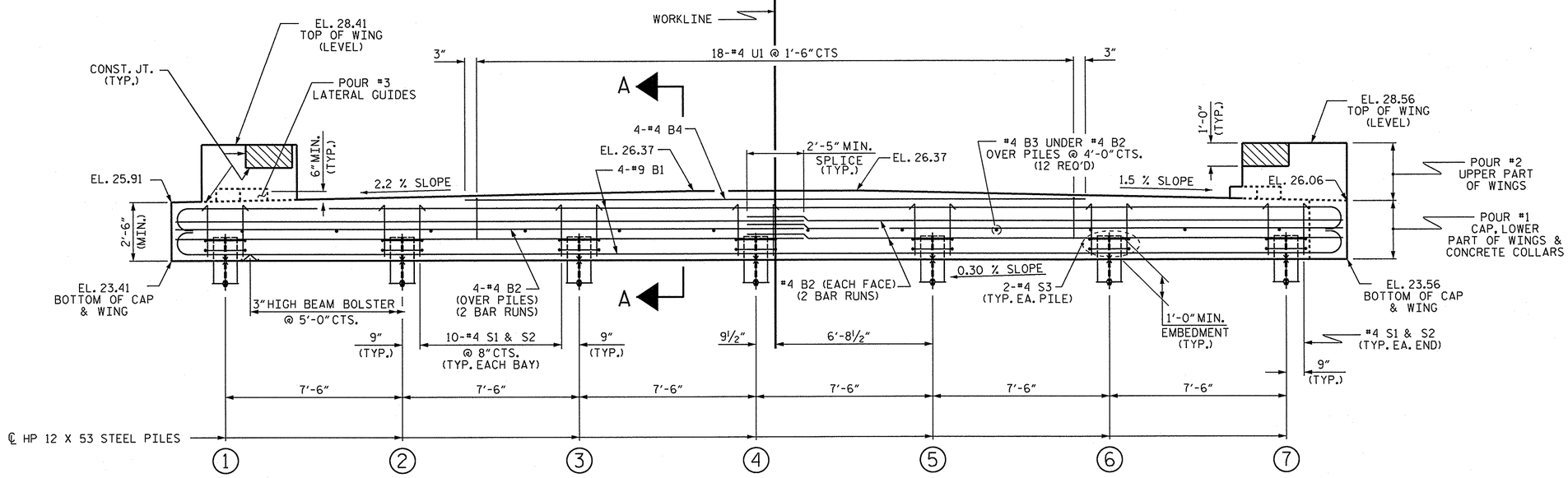

ELEVATION

WINGS NOT SHOWN FOR CLARITY.
FOR SECTION A-A, SEE SHEET 4 OF 4.
CONCRETE COLLARS FOR STEEL PILES NOT SHOWN IN PLAN AND ELEVATION VIEWS FOR CLARITY.
SEE "CORROSION PROTECTION FOR STEEL PILES DETAIL", SHEET 4 OF 4.

NOTES

STIRRUPS IN CAP MAY BE SHIFTED AS NECESSARY TO CLEAR DOWELS.

THE LATERAL GUIDES ARE NOT TO BE POURED UNTIL AFTER THE CORED SLAB UNITS ARE IN PLACE.

THE CONCRETE IN THE SHADED AREA OF THE WING SHALL BE POURED AFTER THE VERTICAL CONCRETE BARRIER RAIL IS CAST IF SLIP FORMING IS USED.

FOR PILE SPLICE DETAILS, SEE SHEET 4 OF 4.

FOR WING DETAILS, SEE SHEET 3 OF 4.

THE CONTRACTOR HAS THE OPTION TO OMIT THE LATERAL GUIDE IF APPROVED BY THE ENGINEER.

INSTALL THE 4" Ø DRAIN PIPE THROUGH THE WING WALL AS REQUIRED FOR REINFORCED BRIDGE APPROACH FILLS, SEE THE ROADWAY PLANS. REINFORCING STEEL IN THE WING WALL MAY BE SHIFTED AS NECESSARY TO CLEAR THE DRAIN PIPE.

TOP OF PILE ELEVATIONS	
1	24.42
2	24.44
3	24.47
4	24.49
5	24.51
6	24.53
7	24.56

PROJECT NO. B-5418
PITT COUNTY
STATION: 15+50.00 -L-

SHEET 1 OF 4

STATE OF NORTH CAROLINA
DEPARTMENT OF TRANSPORTATION
RALEIGH

SUBSTRUCTURE
END BENT No. 1

NORTH CAROLINA PROFESSIONAL SEAL 22005 ENGINEER KEITH PASCHAL
9-18-13

REVISIONS						SHEET NO.
NO.	BY:	DATE:	NO.	BY:	DATE:	S-11
1			3			TOTAL SHEETS
2			4			19

ASSEMBLED BY : M.M. AHMED DATE : 6/17/13
CHECKED BY : M.L. RORIE, P.E. DATE : 8/9/13
DESIGN ENGINEER OF RECORD: M.M. AHMED DATE : 8/21/13

DRAWN BY : DGE 02/10
CHECKED BY : MKT 02/10

18-SEP-2013 06:54
S:\DPGI\Keith\B-5418\mmo\B_5418_SD_TS.dgn
kpaschal

STD. NO. EB_36_120S

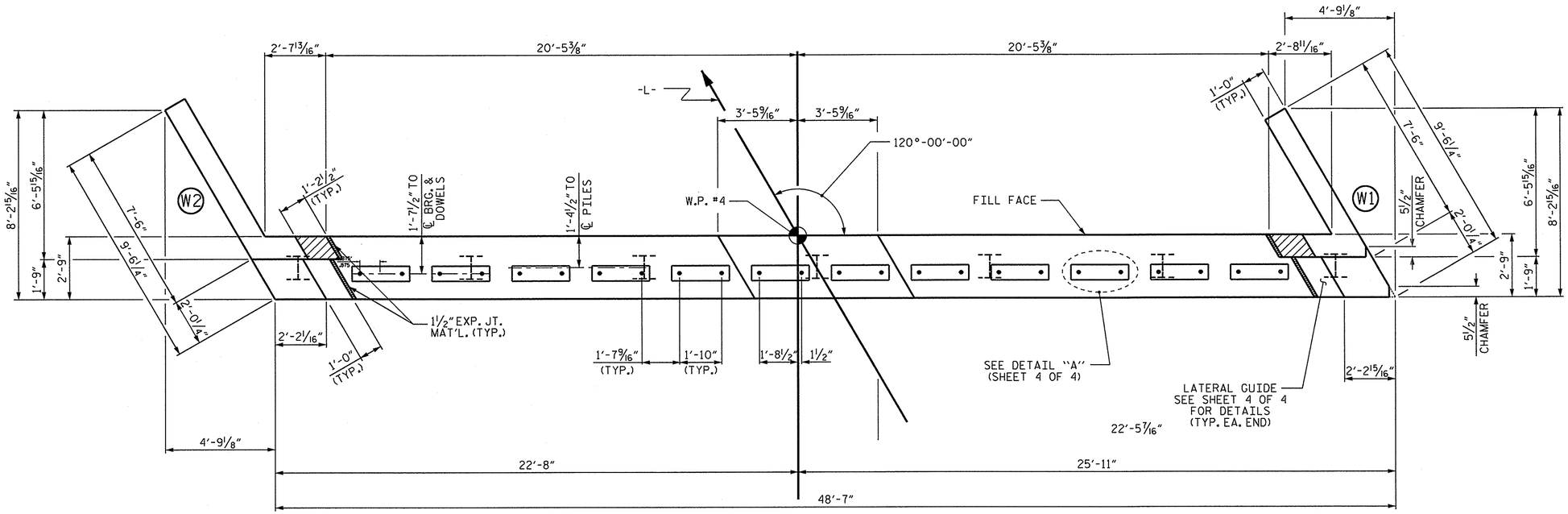

PLAN

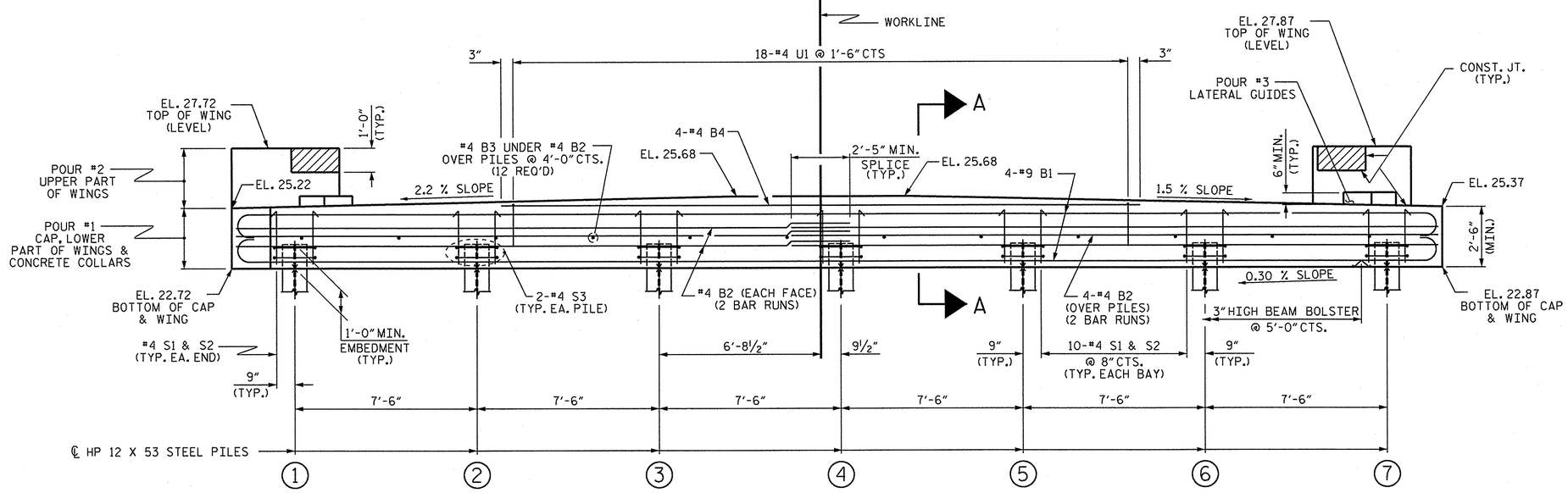

ELEVATION

WINGS NOT SHOWN FOR CLARITY.
FOR SECTION A-A, SEE SHEET 4 OF 4.
CONCRETE COLLARS FOR STEEL PILES NOT SHOWN IN PLAN AND ELEVATION VIEWS FOR CLARITY.
SEE "CORROSION PROTECTION FOR STEEL PILES DETAIL", SHEET 4 OF 4.

NOTES

STIRRUPS IN CAP MAY BE SHIFTED AS NECESSARY TO CLEAR DOWELS.

THE LATERAL GUIDES ARE NOT TO BE POURED UNTIL AFTER THE CORED SLAB UNITS ARE IN PLACE.

THE CONCRETE IN THE SHADED AREA OF THE WING SHALL BE POURED AFTER THE VERTICAL CONCRETE BARRIER RAIL IS CAST IF SLIP FORMING IS USED.

FOR PILE SPLICE DETAILS, SEE SHEET 4 OF 4.

FOR WING DETAILS, SEE SHEET 3 OF 4.

THE CONTRACTOR HAS THE OPTION TO OMIT THE LATERAL GUIDE IF APPROVED BY THE ENGINEER.

INSTALL THE 4"Ø DRAIN PIPE THROUGH THE WING WALL AS REQUIRED FOR REINFORCED BRIDGE APPROACH FILLS, SEE THE ROADWAY PLANS. REINFORCING STEEL IN THE WING WALL MAY BE SHIFTED AS NECESSARY TO CLEAR THE DRAIN PIPE.

TOP OF PILE ELEVATIONS	
1	23.73
2	23.76
3	23.79
4	23.82
5	23.85
6	23.88
7	23.90

PROJECT NO. B-5418
PITT COUNTY
STATION: 15+50.00 -L-

SHEET 2 OF 4

STATE OF NORTH CAROLINA
DEPARTMENT OF TRANSPORTATION
RALEIGH

SUBSTRUCTURE
END BENT No. 2

NORTH CAROLINA PROFESSIONAL SEAL 22006 ENGINEER KEITH PASCHAL
9.18.13

REVISIONS								SHEET NO.
NO.	BY:	DATE:	NO.	BY:	DATE:			S-12
1			3					TOTAL SHEETS
2			4					19

ASSEMBLED BY :	M.M. AHMED	DATE :	6/17/13
CHECKED BY :	M.L. RORIE, P.E.	DATE :	8/9/13
DESIGN ENGINEER OF RECORD:	M.M. AHMED	DATE :	8/21/13
DRAWN BY : DGE 02/10			
CHECKED BY : MKT 02/10			

18-SEP-2013 06:54
S:\DPGI\Keith\B-5418\mma\B_5418_SD_TS.dgn
kpaschal

STD. NO. EB_36_120S

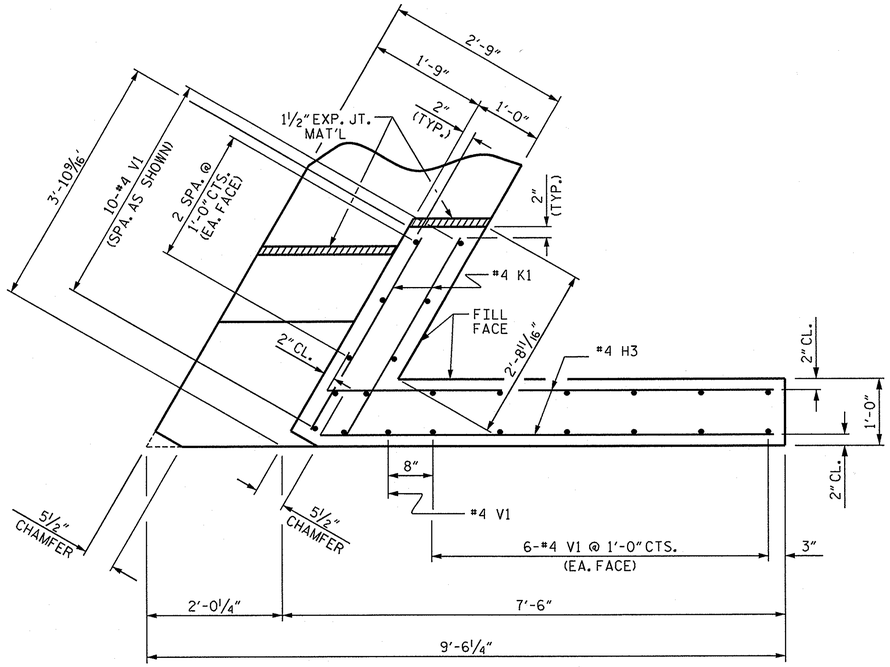

PLAN OF WING (W1)

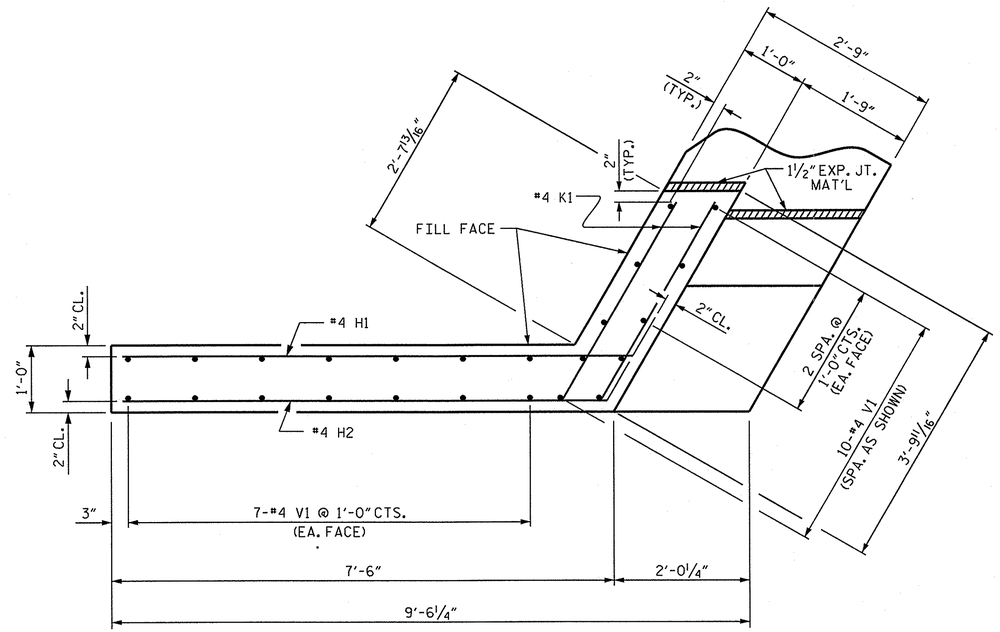

PLAN OF WING (W2)

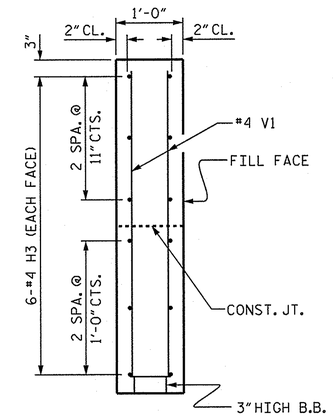

SECTION X-X

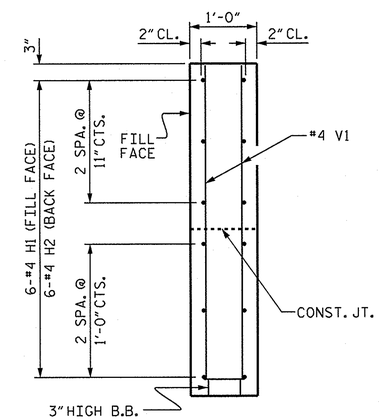

SECTION Y-Y

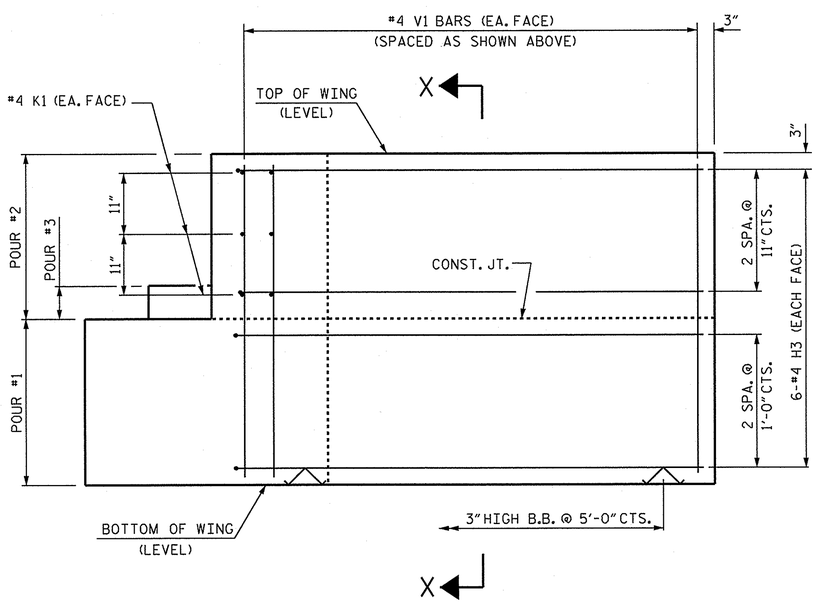

ELEVATION OF WING (W1)

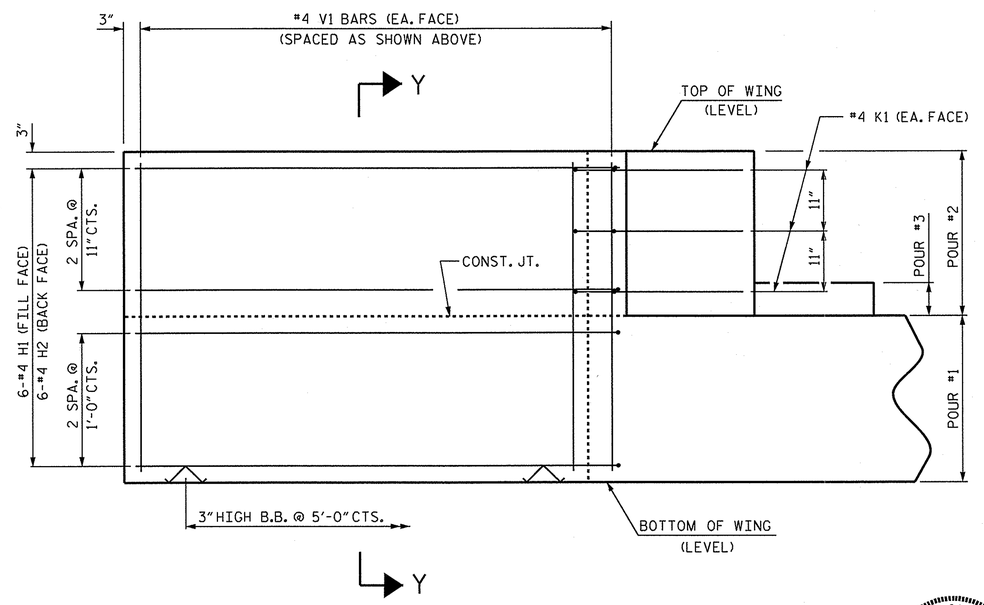

ELEVATION OF WING (W2)

WING DETAILS

PROJECT NO. B-5418

PITT COUNTY

STATION: 15+50.00 -L-

SHEET 3 OF 4

STATE OF NORTH CAROLINA
DEPARTMENT OF TRANSPORTATION
RALEIGH

SUBSTRUCTURE
END BENT
WING DETAILS

NORTH CAROLINA PROFESSIONAL SEAL 22009 ENGINEER A. KEITH PASCHAL
9.18.13

ASSEMBLED BY : M.M. AHMED	DATE : 6/18/13
CHECKED BY : M.L. RORIE, P.E.	DATE : 8/9/13
DRAWN BY : DGE	12/09
CHECKED BY : MKT	01/10

REVISIONS								SHEET NO.
NO.	BY:	DATE:	NO.	BY:	DATE:			S-13
1			3					TOTAL SHEETS
2			4					19

13-SEP-2013 07:26
S:\DPGI\Keith\B-5418\mma\B_5418_SD_TS.dgn
kpaschal

STD. NO. EB_36_120S

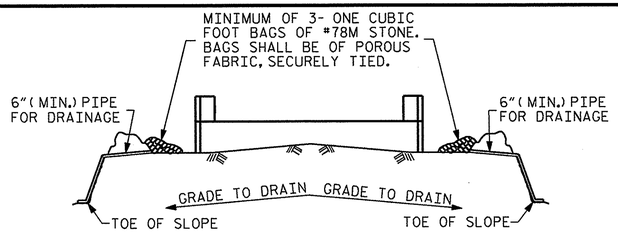

BAGGED STONE AND PIPE SHALL BE PLACED IMMEDIATELY AFTER COMPLETION OF END BENT EXCAVATION. PIPE MAY BE EITHER CONCRETE, CORRUGATED STEEL, CORRUGATED ALUMINUM ALLOY, OR CORRUGATED PLASTIC. PERFORATED PIPE WILL NOT BE ALLOWED.

BAGGED STONE SHALL REMAIN IN PLACE UNTIL THE ENGINEER DIRECTS THAT IT BE REMOVED. THE CONTRACTOR SHALL REMOVE AND DISPOSE OF SILT ACCUMULATIONS AT BAGGED STONE WHEN SO DIRECTED BY THE ENGINEER. BAGS SHALL BE REMOVED AND REPLACED WHENEVER THE ENGINEER DETERMINES THAT THEY HAVE DETERIORATED AND LOST THEIR EFFECTIVENESS.

NO SEPARATE PAYMENT WILL BE MADE FOR THIS WORK AND THE ENTIRE COST OF THIS WORK SHALL BE INCLUDED IN THE UNIT CONTRACT PRICE BID FOR THE SEVERAL PAY ITEMS.

TEMPORARY DRAINAGE AT END BENT

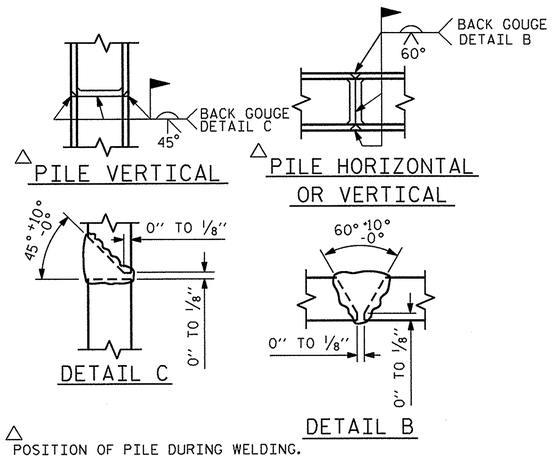

△ POSITION OF PILE DURING WELDING.

PILE SPLICE DETAILS

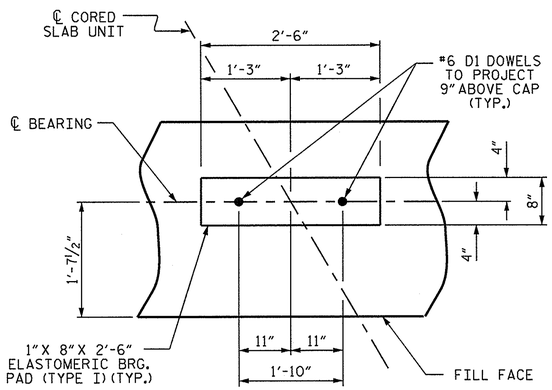

DETAIL "A"

(END BENT No. 1 SHOWN, END BENT No. 2 SIMILAR BY ROTATION)

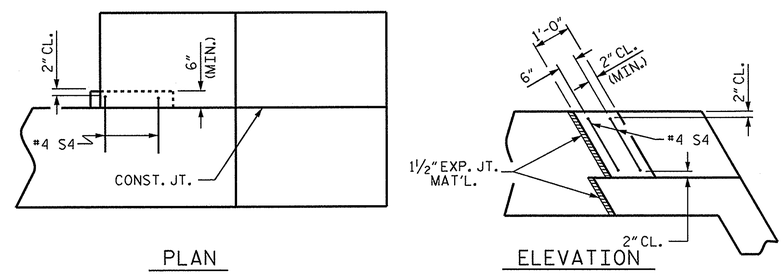

LATERAL GUIDE DETAILS

(END BENT No. 1, RIGHT LATERAL GUIDE SHOWN, LEFT END SIMILAR)
(END BENT No. 2 SIMILAR BY ROTATION)

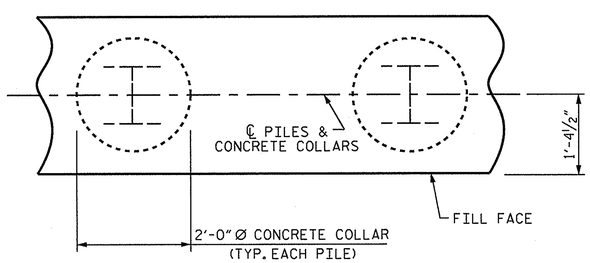

PLAN

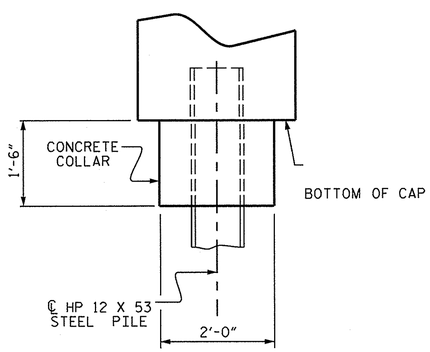

ELEVATION

CORROSION PROTECTION FOR STEEL PILES DETAIL

(END BENT No. 1 SHOWN, END BENT No. 2 SIMILAR BY ROTATION)

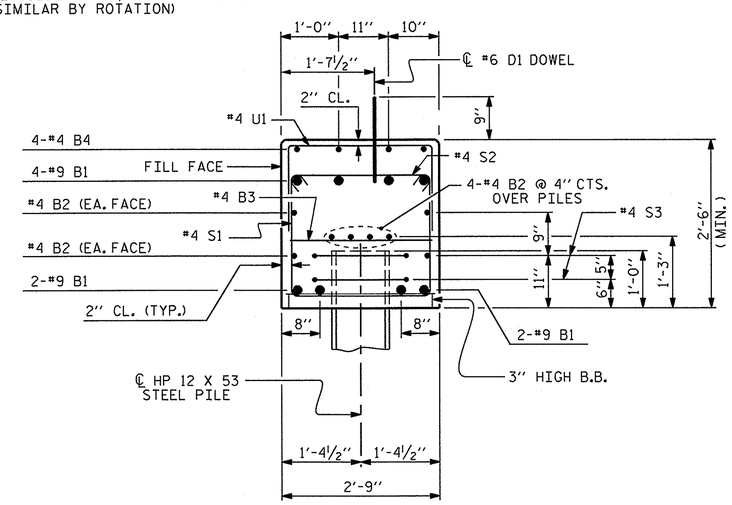

SECTION A-A

(CONCRETE COLLAR NOT SHOWN FOR CLARITY.
SEE "CORROSION PROTECTION FOR STEEL PILES DETAIL.")

BAR TYPES

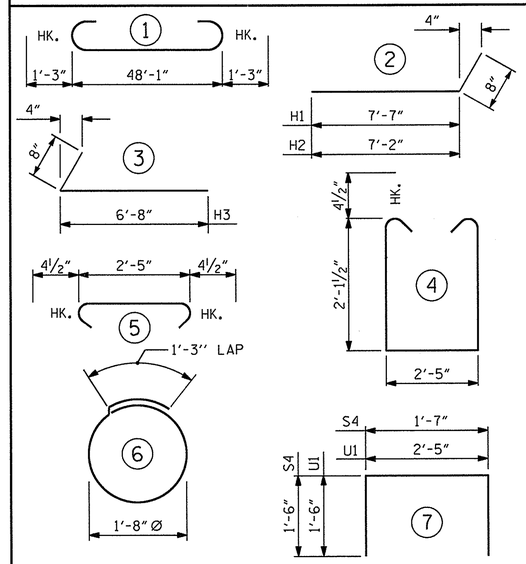

ALL BAR DIMENSIONS ARE OUT TO OUT.

END BENT No. 1	END BENT No. 2
HP 12 X 53 STEEL PILES	HP 12 X 53 STEEL PILES
NO: 7 LIN. FT.= 490	NO: 7 LIN. FT.= 490
PILE REDRIVES 4 EA.	PILE REDRIVES 4 EA.

BILL OF MATERIAL FOR ONE END BENT

BAR	NO.	SIZE	TYPE	LENGTH	WEIGHT
B1	8	#9	1	50'-7"	1376
B2	16	#4	STR	25'-4"	271
B3	12	#4	STR	2'-5"	19
B4	4	#4	STR	26'-0"	69
D1	24	#6	STR	1'-6"	54
H1	6	#4	2	8'-3"	33
H2	6	#4	2	7'-10"	31
H3	12	#4	3	7'-4"	59
K1	12	#4	STR	3'-3"	26
S1	62	#4	4	7'-5"	307
S2	62	#4	5	3'-2"	131
S3	14	#4	6	6'-6"	61
S4	4	#4	7	4'-7"	12
U1	18	#4	7	5'-5"	65
V1	47	#4	STR	4'-8"	147
REINFORCING STEEL (FOR ONE END BENT)					2661 LBS.

CLASS A CONCRETE BREAKDOWN (FOR ONE END BENT)

POUR #1	CAP, LOWER PART OF WINGS & COLLARS	16.0 C.Y.
POUR #2	UPPER PART OF WINGS	1.9 C.Y.
POUR #3	LATERAL GUIDES	0.1 C.Y.
TOTAL CLASS A CONCRETE		18.0 C.Y.

PROJECT NO. B-5418
PITT COUNTY
STATION: 15+50.00 -L-

SHEET 4 OF 4

STATE OF NORTH CAROLINA
DEPARTMENT OF TRANSPORTATION
RALEIGH

SUBSTRUCTURE

END BENT No. 1 & 2 DETAILS

NORTH CAROLINA PROFESSIONAL ENGINEER SEAL 12005 KEITH PASCHAL
9-18-13

REVISIONS						SHEET NO.
NO.	BY:	DATE:	NO.	BY:	DATE:	S-14
1			3			TOTAL SHEETS
2			4			19

ASSEMBLED BY :	M.M. AHMED	DATE :	6/18/13
CHECKED BY :	M.L. RORIE, P.E.	DATE :	8/9/13
DESIGN ENGINEER OF RECORD:	M.M. AHMED	DATE :	8/21/13
DRAWN BY : DGE 12/09			
CHECKED BY : MKT 01/10			

13-SEP-2013 07:25
S:\DPGI\Keith\B-5418\mmo\B_5418_SD_TS.dgn
kpaschal

STD. NO. EB_36_120S

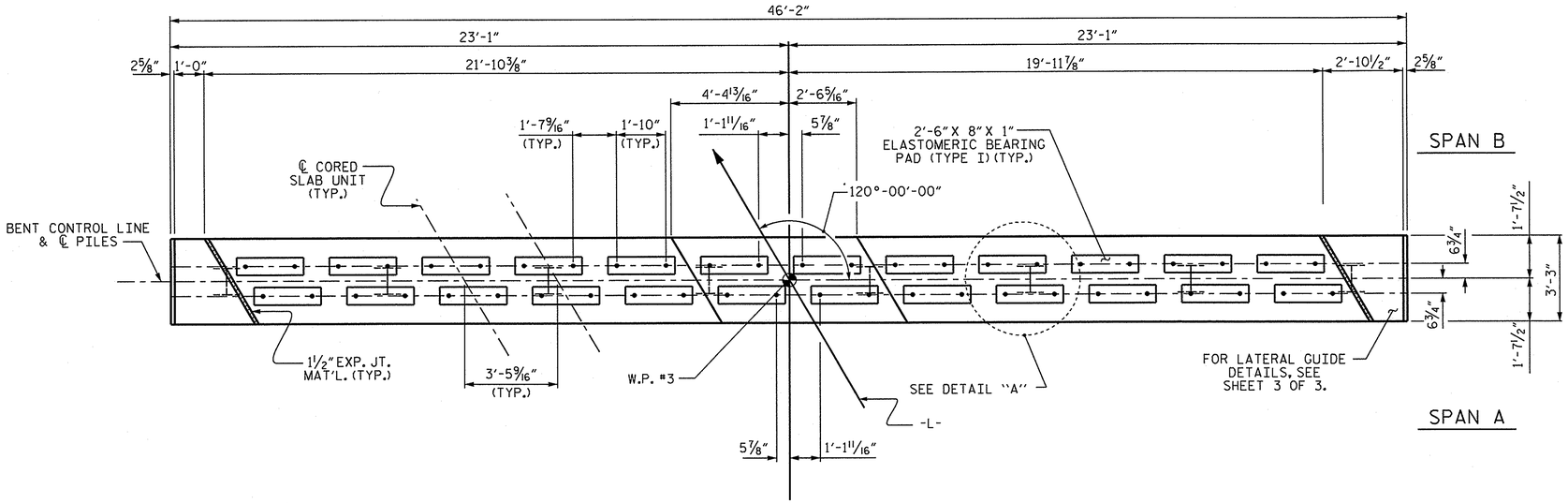

PLAN

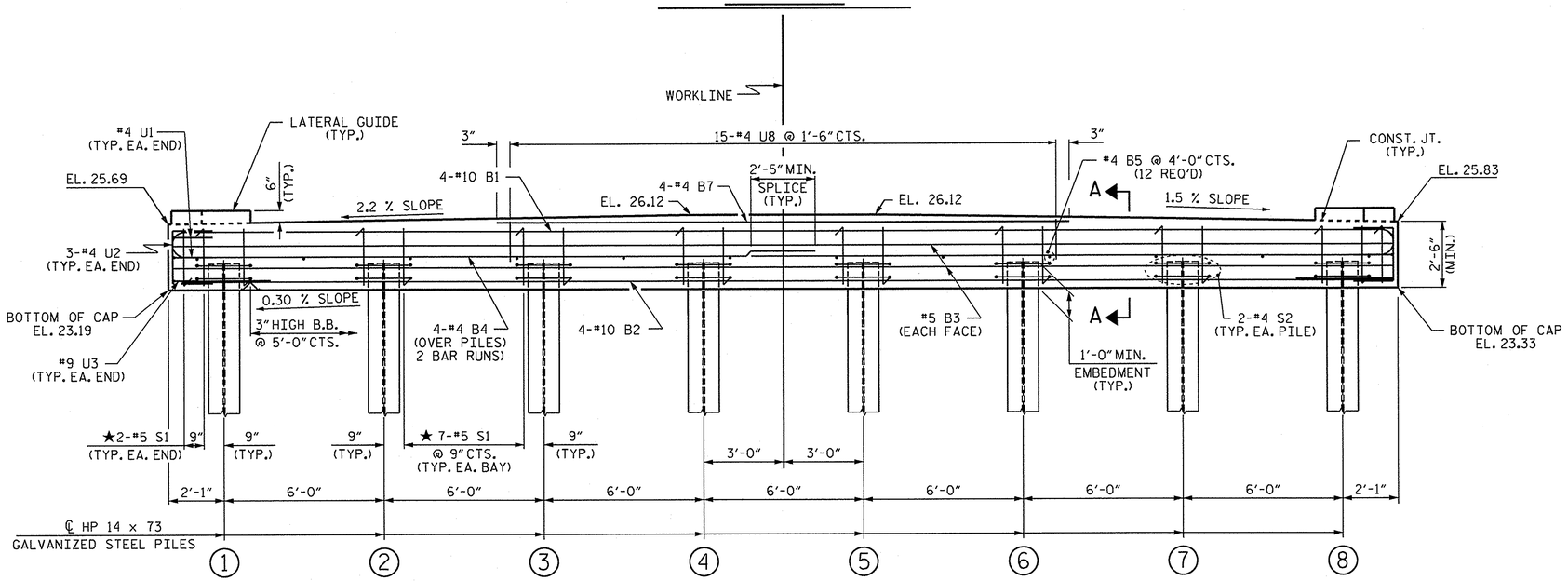

ELEVATION

FOR SECTION A-A, SEE SHEET 3 OF 3

NOTES

STIRRUPS IN CAP MAY BE SHIFTED AS NECESSARY TO CLEAR DOWELS.

THE LATERAL GUIDES ARE NOT TO BE POURED UNTIL AFTER THE CORED SLAB UNITS ARE IN PLACE.

★ INVERT ALTERNATE STIRRUPS.

GALVANIZE THE TOP OF EACH INTERIOR BENT PILE A MINIMUM OF 28.0 FEET. GALVANIZE IN ACCORDANCE WITH SECTION 1076 OF THE STANDARD SPECIFICATIONS.

THE CONTRACTOR HAS THE OPTION TO OMIT THE LATERAL GUIDE IF APPROVED BY THE ENGINEER.

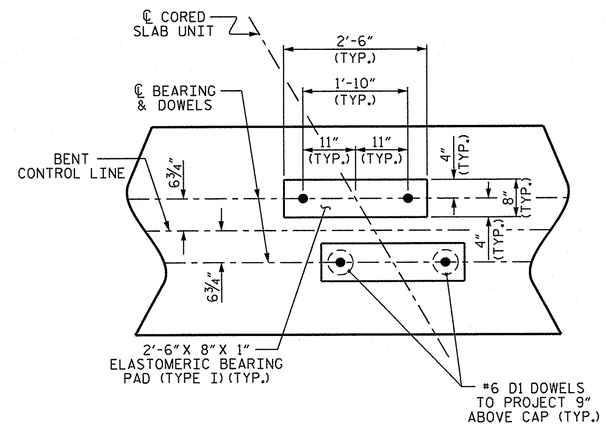

DETAIL "A"

(DIMENSIONS ARE TYPICAL EACH BEARING)

TOP OF PILE ELEVATIONS	
1	24.20
2	24.22
3	24.23
4	24.25
5	24.27
6	24.29
7	24.31
8	24.33

PROJECT NO. B-5418

PITT COUNTY

STATION: 15+50.00 -L-

SHEET 1 OF 3

STATE OF NORTH CAROLINA
DEPARTMENT OF TRANSPORTATION
RALEIGH

SUBSTRUCTURE

BENT No. 1

NORTH CAROLINA PROFESSIONAL SEAL 22008 ENGINEER K. KEITH PASCHAL
9-18-13

REVISIONS							SHEET NO.
NO.	BY:	DATE:	NO.	BY:	DATE:		S-15
1			3				TOTAL SHEETS
2			4				19

ASSEMBLED BY : M.M. AHMED DATE : 7/30/13
CHECKED BY : M.L. RORIE, P.E. DATE : 8/9/13
DESIGN ENGINEER OF RECORD: M.M. AHMED DATE : 8/21/13

DRAWN BY : DGE 05/10
CHECKED BY : MKT 05/10

13-SEP-2013 07:25
S:\DPGI\Keith\B-5418\mma\B_5418_SD_TS.dgn
kpaschal

STD. NO. 14" HP_BT_36_120S_<60'

NOTES

STIRRUPS IN CAP MAY BE SHIFTED AS NECESSARY TO CLEAR DOWELS.

THE LATERAL GUIDES ARE NOT TO BE POURED UNTIL AFTER THE CORED SLAB UNITS ARE IN PLACE.

★ INVERT ALTERNATE STIRRUPS.

GALVANIZE THE TOP OF EACH INTERIOR BENT PILE A MINIMUM OF 28.0 FEET. GALVANIZE IN ACCORDANCE WITH SECTION 1076 OF THE STANDARD SPECIFICATIONS.

THE CONTRACTOR HAS THE OPTION TO OMIT THE LATERAL GUIDE IF APPROVED BY THE ENGINEER.

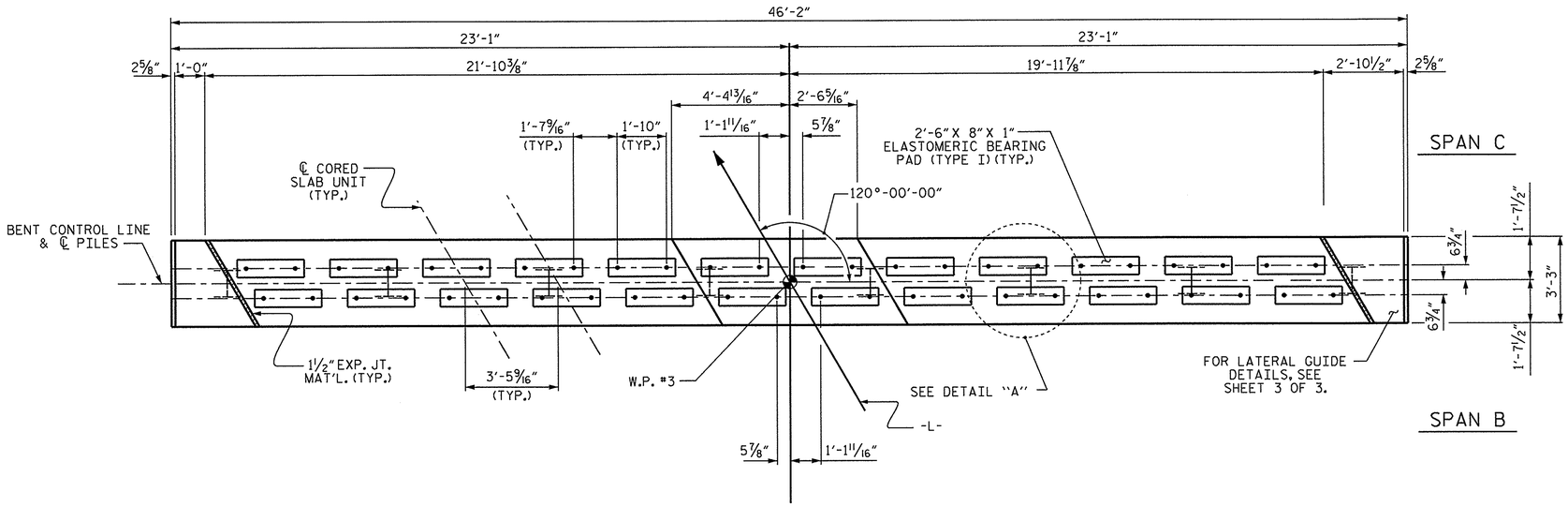

PLAN

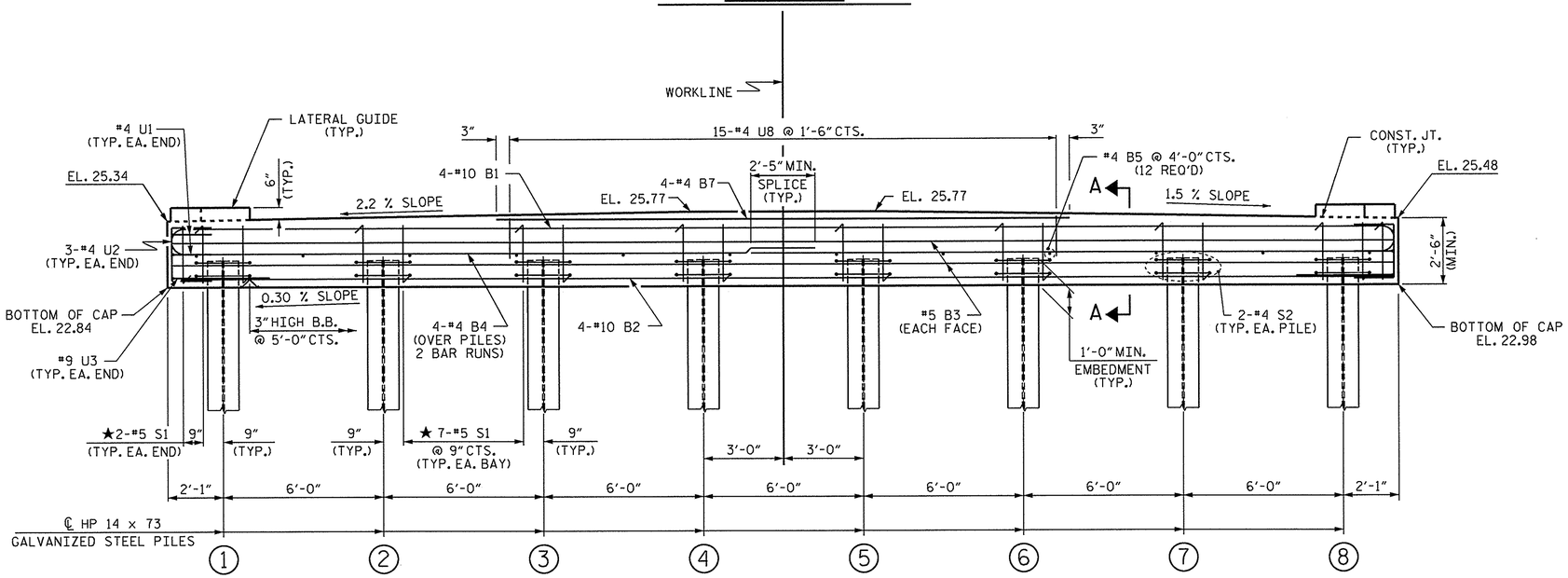

ELEVATION

FOR SECTION A-A, SEE SHEET 3 OF 3

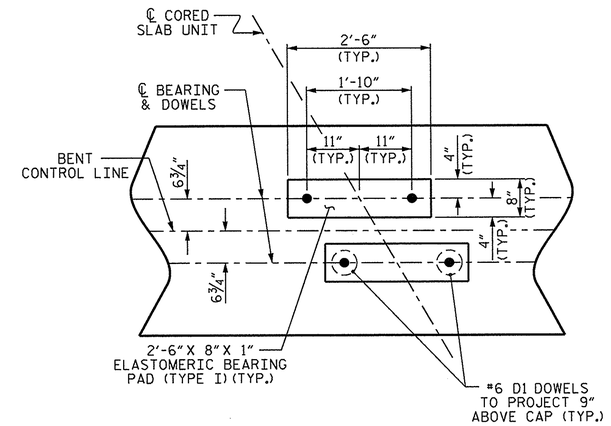

DETAIL "A"

(DIMENSIONS ARE TYPICAL EACH BEARING)

TOP OF PILE ELEVATIONS	
1	23.85
2	23.87
3	23.89
4	23.90
5	23.92
6	23.94
7	23.96
8	23.98

PROJECT NO. B-5418

PITT COUNTY

STATION: 15+50.00 -L-

SHEET 2 OF 3

STATE OF NORTH CAROLINA
DEPARTMENT OF TRANSPORTATION
RALEIGH

SUBSTRUCTURE

BENT No. 2

NORTH CAROLINA PROFESSIONAL SEAL 22005 ENGINEER M. KEITH PASCHAL

9-18-13

REVISIONS						SHEET NO.
NO.	BY:	DATE:	NO.	BY:	DATE:	S-16
1			3			TOTAL SHEETS
2			4			19

ASSEMBLED BY : M.M. AHMED DATE : 7/30/13
CHECKED BY : M.L. RORIE, P.E. DATE : 8/9/13
DESIGN ENGINEER OF RECORD: M.M. AHMED DATE : 8/21/13

DRAWN BY : DGE 05/10
CHECKED BY : MKT 05/10

13-SEP-2013 07:25
S:\DPGI\Keith\B-5418\mmo\B_5418_SD_TS.dgn
kpaschal

STD. NO. 14" HP_BT_36_120S_<60'

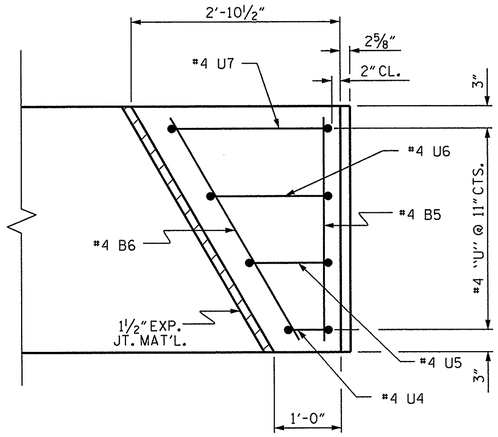

PLAN

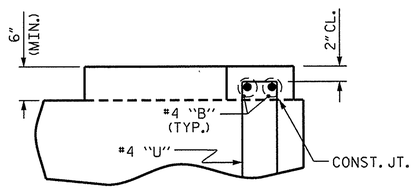

ELEVATION

LATERAL GUIDE DETAILS

(RIGHT LATERAL GUIDE SHOWN, LEFT SIDE SIMILAR)

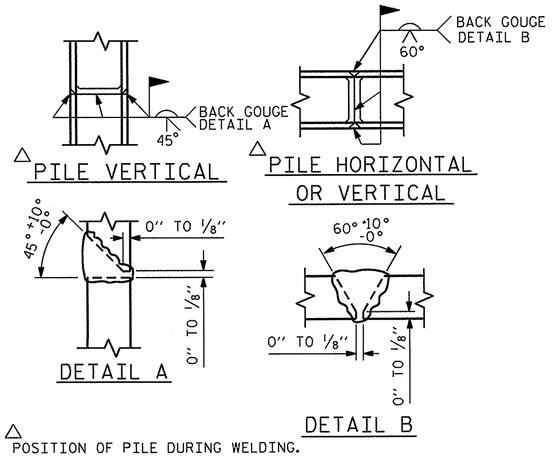

△ POSITION OF PILE DURING WELDING.

PILE SPLICE DETAILS

BAR TYPES

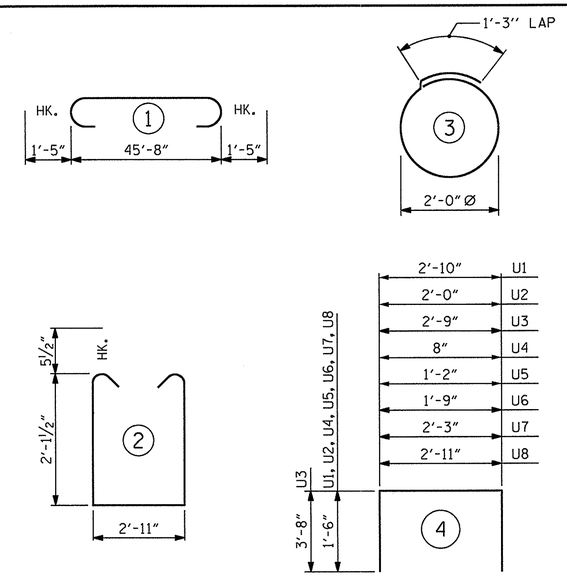

ALL BAR DIMENSIONS ARE OUT TO OUT.

BILL OF MATERIAL
FOR ONE BENT

BAR	NO.	SIZE	TYPE	LENGTH	WEIGHT
B1	4	#10	1	48'-5"	835
B2	4	#10	STR	45'-10"	789
B3	4	#5	STR	45'-10"	191
B4	8	#4	STR	24'-2"	129
B5	14	#4	STR	2'-11"	27
B6	2	#4	STR	3'-4"	4
B7	4	#4	STR	21'-6"	57
D1	48	#6	STR	1'-6"	108
S1	53	#5	2	8'-1"	447
S2	16	#4	3	7'-7"	81
U1	4	#4	4	5'-10"	16
U2	6	#4	4	5'-0"	20
U3	2	#9	4	10'-1"	69
U4	2	#4	4	3'-8"	5
U5	2	#4	4	4'-2"	6
U6	2	#4	4	4'-9"	6
U7	2	#4	4	5'-3"	7
U8	15	#4	4	5'-11"	59

REINFORCING STEEL (FOR ONE BENT) 2856 LBS

CLASS A CONCRETE BREAKDOWN (FOR ONE BENT)

POUR #1 (CAP) 15.1 C.Y.
POUR #2 (LATERAL GUIDES) 0.2 C.Y.

TOTAL CLASS A CONCRETE 15.3 C.Y.

HP 14 X 73 GALVANIZED STEEL PILES (FOR ONE BENT)

No. 8 680 LIN. FT.
PILE REDRIVES 4 EA.

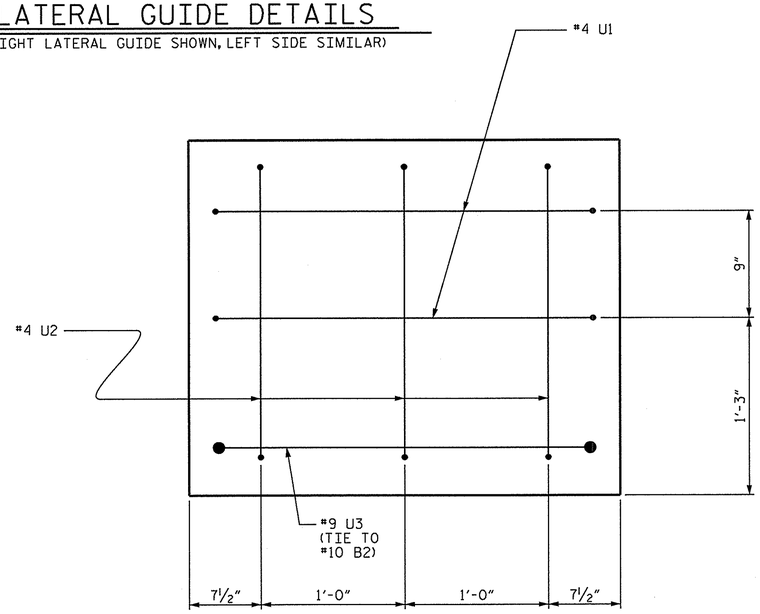

END OF CAP VIEW

(TYPICAL BOTH ENDS)

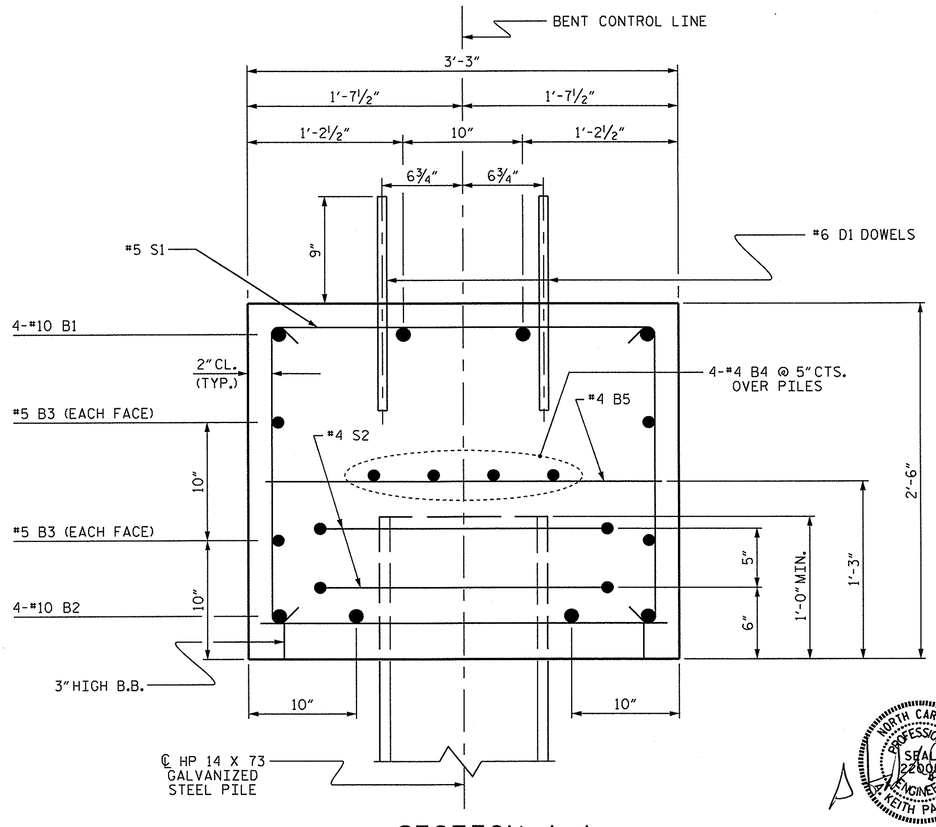

SECTION A-A

NORTH CAROLINA PROFESSIONAL SEAL 22005 ENGINEER A. KEITH PASCHAL
9.18.13

PROJECT NO. B-5418
PITT COUNTY
STATION: 15+50.00 -L-

SHEET 3 OF 3

STATE OF NORTH CAROLINA
DEPARTMENT OF TRANSPORTATION
RALEIGH

SUBSTRUCTURE

BENT No. 1 & 2

REVISIONS								SHEET NO.
NO.	BY:	DATE:	NO.	BY:	DATE:			S-17
1			3					TOTAL SHEETS
2			4					19

DRAWN BY : M.M. AHMED DATE : 7/30/13
CHECKED BY : M.L. RORIE, P.E. DATE : 8/9/13
DESIGN ENGINEER OF RECORD: M.M. AHMED DATE : 8/21/13

DRAWN BY : DGE 05/10
CHECKED BY : MKT 05/10

13-SEP-2013 07:24
S:\DPG1\Keith\B-5418\mma\B_5418_SD_TS.dgn
kpaschal

STD. NO. 14" HP_BT_36_120S_<60'

NOTES :

FOR BERM WIDTH DIMENSIONS, SEE GENERAL DRAWING.

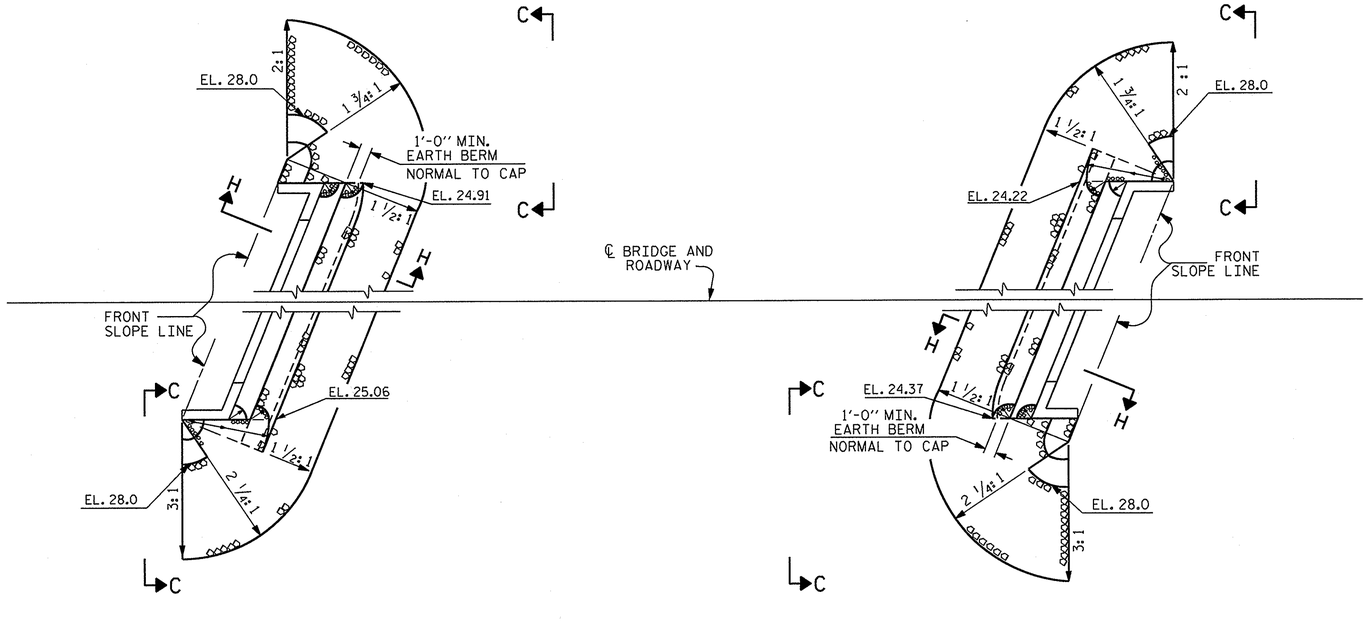

END BENT 1

END BENT 2

ESTIMATED QUANTITIES		
BRIDGE @ STA. 15+50.00 -L-	RIP RAP CLASS II (2'-0" THICK)	GEOTEXTILE FOR DRAINAGE
	TONS	SQUARE YARDS
END BENT 1	128	142
END BENT 2	123	137

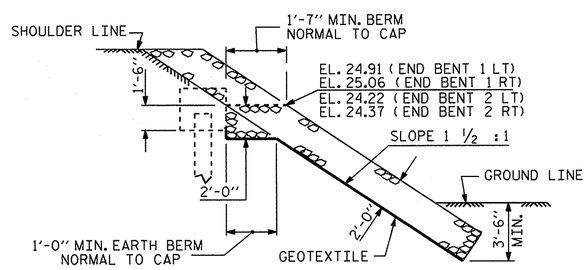

SECTION H-H

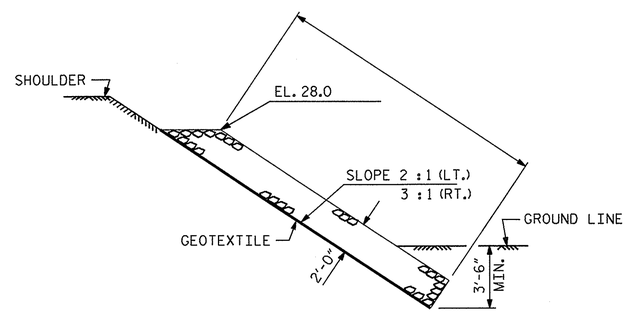

VIEW C-C

PROJECT NO. B-5418

PITT COUNTY

STATION: 15+50.00 -L-

STATE OF NORTH CAROLINA
DEPARTMENT OF TRANSPORTATION
RALEIGH

STANDARD

RIP RAP DETAILS

NORTH CAROLINA PROFESSIONAL SEAL 22005 ENGINEER KEITH PASCHAL

9.18.13

REVISIONS						SHEET NO.
NO.	BY:	DATE:	NO.	BY:	DATE:	S-18
1			3			TOTAL SHEETS
2			4			19

DRAWN BY :	M.M. AHMED	DATE :	6/20/13
CHECKED BY :	M.L. RORIE, P.E.	DATE :	8/8/13
DESIGN ENGINEER OF RECORD:	M.M. AHMED	DATE :	8/8/13

13-SEP-2013 07:24
S:\DPGI\Keith\B-5418\mmq\B_5418_SD_TS.dgn
kpaschal

STD. NO. RR1 (Sht 3)

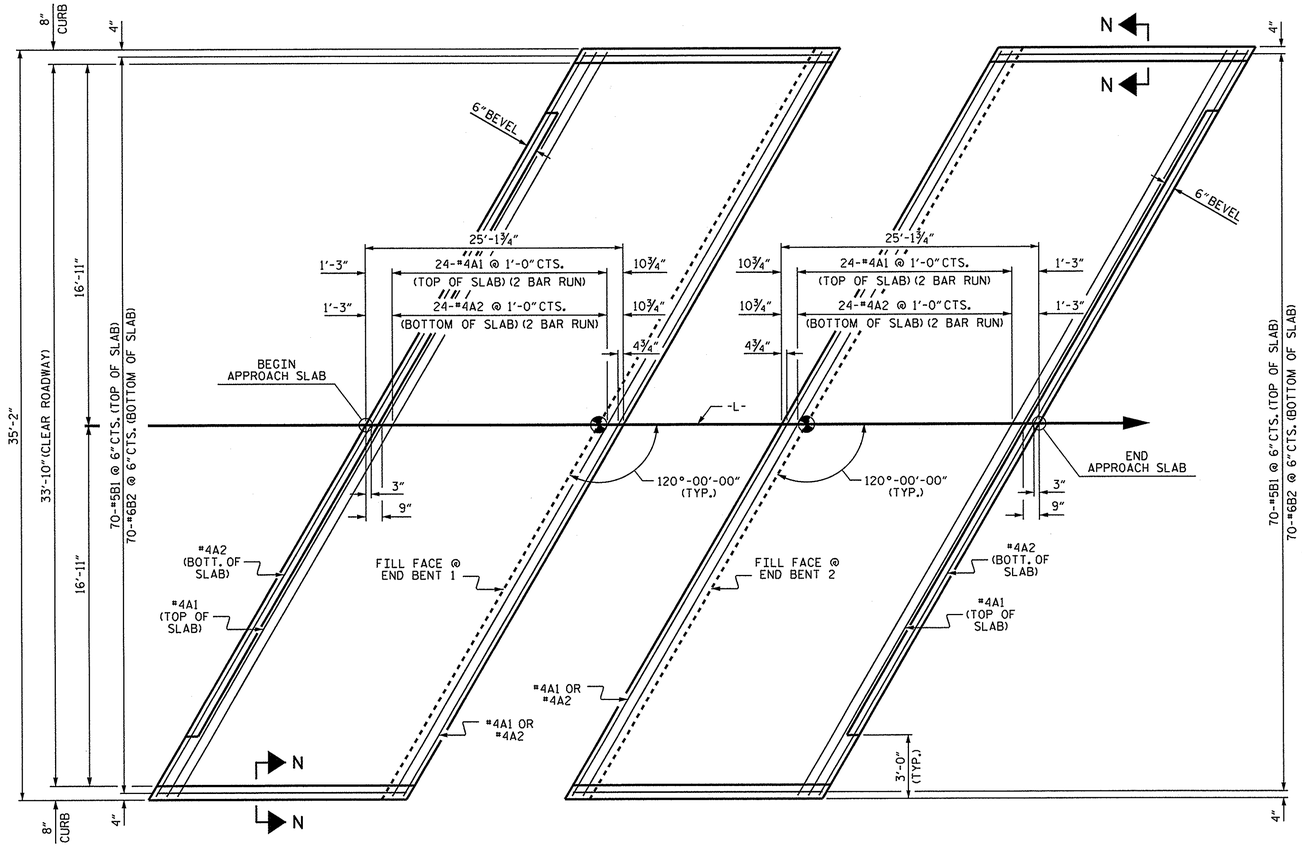

PLAN @ END BENT 1

PLAN @ END BENT 2

DIMENSIONS SHOWN ARE TYPICAL FOR BOTH APPROACH SLABS

NOTES

FOR REINFORCED BRIDGE APPROACH FILL INCLUDING GEOTEXTILE, IMPERMEABLE GEOMEMBRANE, 4" Ø DRAINAGE PIPE, #78M STONE, AND SELECT MATERIAL, SEE ROADWAY PLANS.

AREA BETWEEN THE WINGWALL AND APPROACH SLAB SHALL BE GRADED TO DRAIN THE WATER AWAY FROM THE FILL FACE OF THE BRIDGE AND SHALL BE PAVED. SEE ROADWAY PLANS.

APPROACH SLAB GROOVING IS REQUIRED.

APPROACH SLAB CONCRETE SHALL BE POURED AFTER CONCRETE WEARING SURFACE.

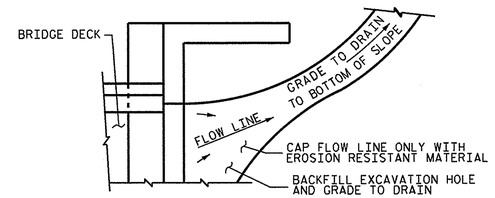

NOTE: IF THE APPROACH SLAB IS NOT CONSTRUCTED IMMEDIATELY AFTER THE BACKFILLING OF THE END BENT EXCAVATION, GRADE TO DRAIN TO THE BOTTOM OF THE SLOPE AND PROVIDE EROSION RESISTANT MATERIAL, SUCH AS FIBERGLASS ROVING OR AS DIRECTED BY THE ENGINEER TO PREVENT SOIL EROSION AND TO PROTECT THE AREA ADJACENT TO THE STRUCTURE. THE CONTRACTOR WILL BE REQUIRED TO REMOVE THESE MATERIALS PRIOR TO CONSTRUCTION OF THE APPROACH SLAB.

TEMPORARY DRAINAGE DETAIL

BILL OF MATERIAL

APPROACH SLAB AT EB 1					
BAR	NO.	SIZE	TYPE	LENGTH	WEIGHT
* A1	52	#4	STR	21'-2"	735
A2	52	#4	STR	21'-0"	729
* B1	70	#5	STR	24'-1"	1758
B2	70	#6	STR	24'-7"	2585
REINFORCING STEEL				LBS.	3314
* EPOXY COATED REINFORCING STEEL				LBS.	2493
CLASS AA CONCRETE				C. Y.	41.6

APPROACH SLAB AT EB 2					
BAR	NO.	SIZE	TYPE	LENGTH	WEIGHT
* A1	52	#4	STR	21'-2"	735
A2	52	#4	STR	21'-0"	729
* B1	70	#5	STR	24'-1"	1758
B2	70	#6	STR	24'-7"	2585
REINFORCING STEEL				LBS.	3314
* EPOXY COATED REINFORCING STEEL				LBS.	2493
CLASS AA CONCRETE				C. Y.	41.6

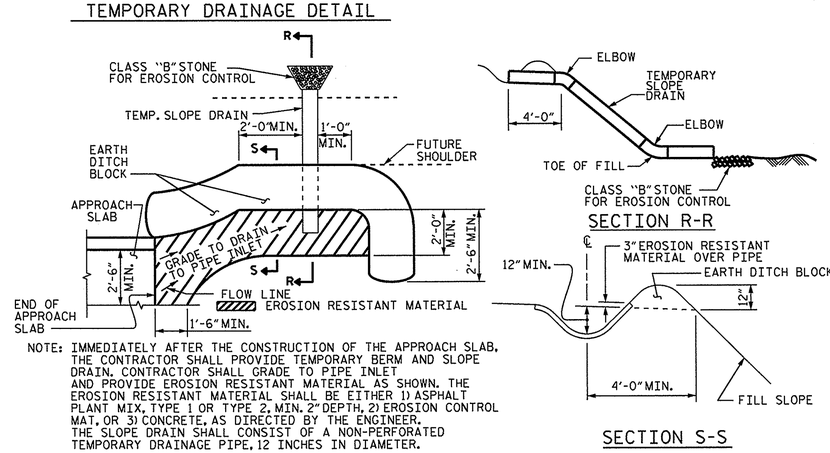

NOTE: IMMEDIATELY AFTER THE CONSTRUCTION OF THE APPROACH SLAB, THE CONTRACTOR SHALL PROVIDE TEMPORARY BERM AND SLOPE DRAIN. CONTRACTOR SHALL GRADE TO PIPE INLET AND PROVIDE EROSION RESISTANT MATERIAL AS SHOWN. THE EROSION RESISTANT MATERIAL SHALL BE EITHER 1) ASPHALT PLANT MIX, TYPE 1 OR TYPE 2, MIN. 2" DEPTH, 2) EROSION CONTROL MAT, OR 3) CONCRETE, AS DIRECTED BY THE ENGINEER. THE SLOPE DRAIN SHALL CONSIST OF A NON-PERFORATED TEMPORARY DRAINAGE PIPE, 12 INCHES IN DIAMETER.

PLAN VIEW

SECTION S-S

TEMPORARY BERM AND SLOPE DRAIN DETAILS

(TO BE USED WHEN SHOULDER BERM GUTTER IS REQUIRED)

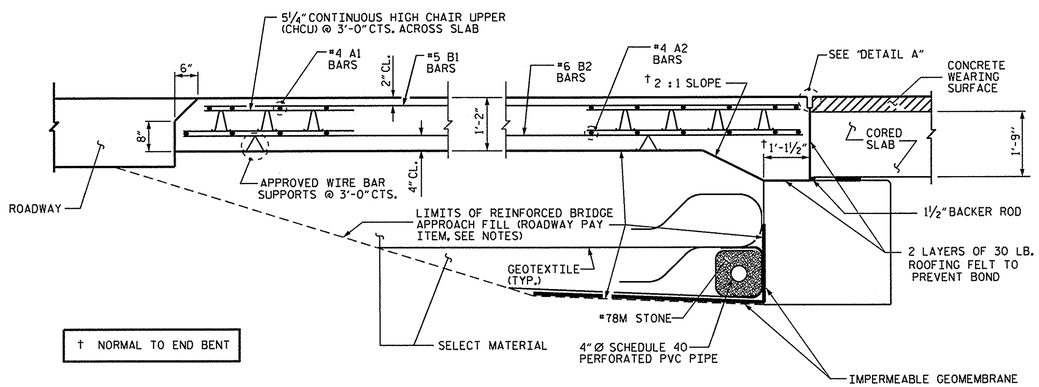

† NORMAL TO END BENT

SECTION THRU SLAB

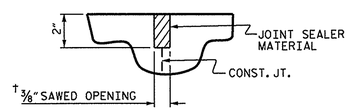

DETAIL A

SPLICE LENGTHS		
BAR SIZE	EPOXY COATED	UNCOATED
#4	2'-0"	1'-9"
#5	2'-6"	2'-2"
#6	3'-10"	2'-7"

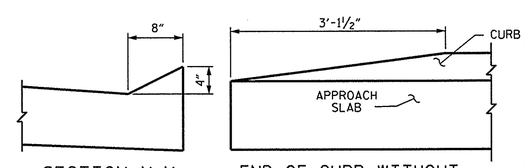

SECTION N-N

END OF CURB WITHOUT SHOULDER BERM GUTTER

CURB DETAILS

PROJECT NO. B-5418

PITT COUNTY

STATION: 15+50.00 -L-

STATE OF NORTH CAROLINA
DEPARTMENT OF TRANSPORTATION
RALEIGH

STANDARD
BRIDGE APPROACH SLAB
FOR PRESTRESSED CONCRETE
CORED SLAB UNIT

120° SKEW

NORTH CAROLINA PROFESSIONAL SEAL 22008 ENGINEER M. KEITH PASCHAL
9.18.13

REVISIONS							SHEET NO.
NO.	BY:	DATE:	NO.	BY:	DATE:		S-19
1			3				TOTAL SHEETS
2			4				19

DRAWN BY :	M.M. AHMED	DATE :	6/20/13
CHECKED BY :	M.L. RORIE, P.E.	DATE :	8/20/13
DESIGN ENGINEER OF RECORD:	M.M. AHMED	DATE :	8/21/13

13-SEP-2013 07:24
S:\DPGI\keith\B-5418\mmo\B_5418_SD_TS.dgn
kpaschal

STD. NO. BAS_36_120S

STANDARD NOTES

DESIGN DATA:

SPECIFICATIONS	A.A.S.H.T.O. (CURRENT)
LIVE LOAD	SEE PLANS
IMPACT ALLOWANCE	SEE A.A.S.H.T.O.
STRESS IN EXTREME FIBER OF	
STRUCTURAL STEEL - AASHTO M270 GRADE 36	20,000 LBS. PER SQ. IN.
- AASHTO M270 GRADE 50W	27,000 LBS. PER SQ. IN.
- AASHTO M270 GRADE 50	27,000 LBS. PER SQ. IN.
REINFORCING STEEL IN TENSION	
GRADE 60	24,000 LBS. PER SQ. IN.
CONCRETE IN COMPRESSION	1,200 LBS. PER SQ. IN.
CONCRETE IN SHEAR	SEE A.A.S.H.T.O.
STRUCTURAL TIMBER - TREATED OR	
UNTREATED - EXTREME FIBER STRESS	1,800 LBS. PER SQ. IN.
COMPRESSION PERPENDICULAR TO GRAIN OF TIMBER	375 LBS. PER SQ. IN.
EQUIVALENT FLUID PRESSURE OF EARTH	30 LBS. PER CU. FT. (MINIMUM)

MATERIAL AND WORKMANSHIP:

EXCEPT AS MAY OTHERWISE BE SPECIFIED ON PLANS OR IN THE SPECIAL PROVISIONS, ALL MATERIAL AND WORKMANSHIP SHALL BE IN ACCORDANCE WITH THE 2012 "STANDARD SPECIFICATIONS FOR ROADS AND STRUCTURES" OF THE N. C. DEPARTMENT OF TRANSPORTATION.

STEEL SHEET PILING FOR PERMANENT OR TEMPORARY APPLICATIONS SHALL BE HOT ROLLED.

CONCRETE:

UNLESS OTHERWISE REQUIRED ON PLANS, CLASS A CONCRETE SHALL BE USED FOR ALL PORTIONS OF ALL STRUCTURES WITH THE EXCEPTION THAT: CLASS AA CONCRETE SHALL BE USED IN BRIDGE SUPERSTRUCTURES, ABUTMENT BACKWALLS, AND APPROACH SLABS; AND CLASS B CONCRETE SHALL BE USED FOR SLOPE PROTECTION AND RIP RAP.

CONCRETE CHAMFERS:

UNLESS OTHERWISE NOTED ON THE PLANS, ALL EXPOSED CORNERS ON STRUCTURES SHALL BE CHAMFERED 3/4" WITH THE FOLLOWING EXCEPTIONS: TOP CORNERS OF CURBS MAY BE ROUNDED TO 1-1/2" RADIUS WHICH IS BUILT INTO CURB FORMS; CORNERS OF TRANSVERSE FLOOR EXPANSION JOINTS SHALL BE ROUNDED WITH A 1/4" FINISHING TOOL UNLESS OTHERWISE REQUIRED ON PLANS; AND CORNERS OF EXPANSION JOINTS IN THE ROADWAY FACES AND TOPS OF CURBS AND SIDEWALKS SHALL BE ROUNDED TO A 1/4" RADIUS WITH A FINISHING STONE OR TOOL UNLESS OTHERWISE REQUIRED ON PLANS.

DOWELS:

DOWELS WHEN INDICATED ON PLANS AS FOR CULVERT EXTENSIONS, SHALL BE EMBEDDED AT LEAST 12" INTO THE OLD CONCRETE AND GROUTED INTO PLACE WITH 1:2 CEMENT MORTAR.

ALLOWANCE FOR DEAD LOAD DEFLECTION, SETTLEMENT, ETC. IN CASTING SUPERSTRUCTURES:

BRIDGES SHALL BE BUILT ON THE GRADE OR VERTICAL CURVE SHOWN ON PLANS. SLABS, CURBS AND PARAPETS SHALL CONFORM TO THE GRADE OR CURVE.

ALL DIMENSIONS WHICH ARE GIVEN IN SECTION AND ARE AFFECTED BY DEAD LOAD DEFLECTIONS ARE DIMENSIONS AT CENTER LINE OF BEARING UNLESS OTHERWISE NOTED ON PLANS. IN SETTING FORMS FOR STEEL BEAM BRIDGES AND PRESTRESSED CONCRETE GIRDER BRIDGES, ADJUSTMENTS SHALL BE MADE DUE TO THE DEAD LOAD DEFLECTIONS FOR THE ELEVATIONS SHOWN. WHERE BLOCKS ARE SHOWN OVER BEAMS FOR BUILDING UP TO THE SLAB, THE VERTICAL DIMENSIONS OF THE BLOCKS SHALL BE ADJUSTED BETWEEN BEARINGS TO COMPENSATE FOR DEAD LOAD DEFLECTIONS, VERTICAL CURVE ORDINATE, AND ACTUAL BEAM CAMBER. WHERE BOTTOM OF SLAB IS IN LINE WITH BOTTOM OF TOP FLANGES, DEPTH OF SLAB BETWEEN BEARINGS SHALL BE ADJUSTED TO COMPENSATE FOR DEAD LOAD DEFLECTION, VERTICAL CURVE ORDINATE, AND ACTUAL BEAM CAMBER.

IN SETTING FALSEWORK AND FORMS FOR REINFORCED CONCRETE SPANS, AN ALLOWANCE SHALL BE MADE FOR DEAD LOAD DEFLECTIONS, SETTLEMENT OF FALSEWORK, AND PERMANENT CAMBER WHICH SHALL BE PROVIDED FOR IN ADDITION TO THE ELEVATIONS SHOWN. AFTER REMOVAL OF THE FALSEWORK, THE FINISHED STRUCTURES SHALL CONFORM TO THE PROFILE AND ELEVATIONS SHOWN ON THE PLANS AND CONSTRUCTION ELEVATIONS FURNISHED BY THE ENGINEER.

DETAILED DRAWINGS FOR FALSEWORK OR FORMS FOR BRIDGE SUPERSTRUCTURE AND ANY STRUCTURE OR PARTS OF A STRUCTURE AS NOTED ON THE PLANS SHALL BE SUBMITTED TO THE ENGINEER FOR APPROVAL BEFORE CONSTRUCTION OF THE FALSEWORK OR FORMS IS STARTED.

REINFORCING STEEL:

ALL REINFORCING STEEL SHALL BE DEFORMED. DIMENSIONS RELATIVE TO PLACEMENT OF REINFORCING ARE TO CENTERS OF BARS UNLESS OTHERWISE INDICATED IN THE PLANS. DIMENSIONS ON BAR DETAILS ARE TO CENTERS OF BARS OR ARE OUT TO OUT AS INDICATED ON PLANS.

WIRE BAR SUPPORTS SHALL BE PROVIDED FOR REINFORCING STEEL WHERE INDICATED ON THE PLANS. WHEN BAR SUPPORT PIECES ARE PLACED IN CONTINUOUS LINES, THEY SHALL BE SO PLACED THAT THE ENDS OF THE SUPPORTING WIRES SHALL BE LAPPED TO LOCK LEGS ON ADJOINING PIECES.

STRUCTURAL STEEL:

AT THE CONTRACTOR'S OPTION, HE MAY SUBSTITUTE 7/8" Ø SHEAR STUDS FOR THE 3/4" Ø STUDS SPECIFIED ON THE PLANS. THIS SUBSTITUTION SHALL BE MADE AT THE RATE OF 3 - 7/8" Ø STUDS FOR 4 - 3/4" Ø STUDS, AND STUD SPACING CHANGES SHALL BE MADE AS NECESSARY TO PROVIDE THE SAME EQUIVALENT NUMBER OF 7/8" Ø STUDS ALONG THE BEAM AS SHOWN FOR 3/4" Ø STUDS BASED ON THE RATIO OF 3 - 7/8" Ø STUDS FOR 4 - 3/4" Ø STUDS. STUDS OF THE LENGTH SPECIFIED ON THE PLANS MUST BE PROVIDED. THE MAXIMUM SPACING SHALL BE 2'-0".

EXCEPT AT THE INTERIOR SUPPORTS OF CONTINUOUS BEAMS WHERE THE COVER PLATE IS IN CONTACT WITH BEARING PLATE, THE CONTRACTOR MAY, AT HIS OPTION, SUBSTITUTE FOR THE COVER PLATES DESIGNATED ON THE PLANS COVER PLATES OF THE EQUIVALENT AREA PROVIDED THESE PLATES ARE AT LEAST 5/16" IN THICKNESS AND DO NOT EXCEED A WIDTH EQUAL TO THE FLANGE WIDTH LESS 2" OR A THICKNESS EQUAL TO 2 TIMES THE FLANGE THICKNESS. THE SIZE OF FILLET WELDS SHALL CONFORM TO THE REQUIREMENTS OF THE CURRENT ANSI/AASHTO/AWS "BRIDGE WELDING CODE". ELECTROSLAG WELDING WILL NOT BE PERMITTED.

WITH THE SOLE EXCEPTION OF EDGES AT SURFACES WHICH BEAR ON OTHER SURFACES, ALL SHARP EDGES AND ENDS OF SHAPES AND PLATES SHALL BE SLIGHTLY ROUNDED BY SUITABLE MEANS TO A RADIUS OF APPROXIMATELY 1/16 INCH OR EQUIVALENT FLAT SURFACE AT A SUITABLE ANGLE PRIOR TO PAINTING, GALVANIZING, OR METALLIZING.

HANDRAILS AND POSTS:

METAL STANDARDS AND FACES OF THE CONCRETE END POSTS FOR THE METAL RAIL SHALL BE SET NORMAL TO THE GRADE OF THE CURB, UNLESS OTHERWISE SHOWN ON PLANS. THE METAL RAIL AND TOPS OF CONCRETE POSTS USED WITH THE ALUMINUM RAIL SHALL BE BUILT PARALLEL TO THE GRADE OF THE CURB.

METAL HANDRAILS SHALL BE IN ACCORDANCE WITH THE PLANS. RAILS SHALL BE AS MANUFACTURED FOR BRIDGE RAILING. CASTINGS SHALL BE OF A UNIFORM APPEARANCE. FINS AND OTHER DEFORMATIONS RESULTING FROM CASTING OR OTHERWISE SHALL BE REMOVED IN A MANNER SO THAT A UNIFORM COLORING OF THE COMPLETED CASTING SHALL BE OBTAINED. CASTINGS WITH DISCOLORATIONS OR OF NON-UNIFORM COLORING WILL NOT BE ACCEPTED. CERTIFIED MILL REPORTS ARE REQUIRED FOR METAL RAILS AND POSTS.

SPECIAL NOTES:

GENERALLY, IN CASE OF DISCREPANCY, THIS STANDARD SHEET OF NOTES SHALL GOVERN OVER THE SPECIFICATIONS, BUT THE REMAINDER OF THE PLANS SHALL GOVERN OVER NOTES HEREON, AND SPECIAL PROVISIONS SHALL GOVERN OVER ALL. SEE SPECIFICATIONS ARTICLE 105-4.

ENGLISH

JANUARY, 1990