09/08/99

# TIP PROJECT: 17BP.2.R.67

# CONTRACT: DB00342

See Sheet 1-A For Index of Sheets
See Sheet 1-B for Conventional Plan Sheet Symbols
See Sheet 1C-1 and 1C-2 for Survey Control Sheets

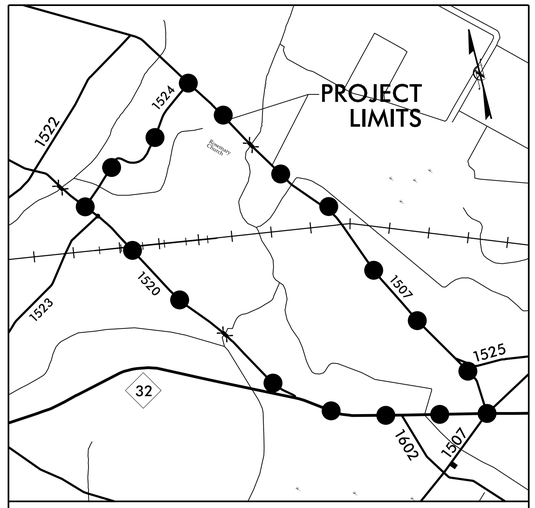


VICINITY MAP
OFFSITE DETOUR

100% SUBMITTAL

STATE OF NORTH CAROLINA
DIVISION OF HIGHWAYS

| STATE | STATE PROJECT REFERENCE NO. | SHEET NO. | TOTAL SHEETS |
|---|---|---|---|
| N.C. | 17BP.2.R.67 | 1 | 50 |

| STATE PROJ. NO. | F.A. PROJ. NO. | DESCRIPTION |
|---|---|---|
| 17BP.2.R.67 | | P.E. |
| 17BP.2.R.67 | | ROW/UTIL |
| 17BP.2.R.67 | | CONSTR. |

# BEAUFORT COUNTY

**LOCATION: REPLACE BRIDGE NO. 110 OVER BEAVERDAM SWAMP ON SR 1507 (SLATESTONE ROAD)**

**TYPE OF WORK: GRADING, DRAINAGE, PAVING AND STRUCTURE**

NAD 83/2011

4

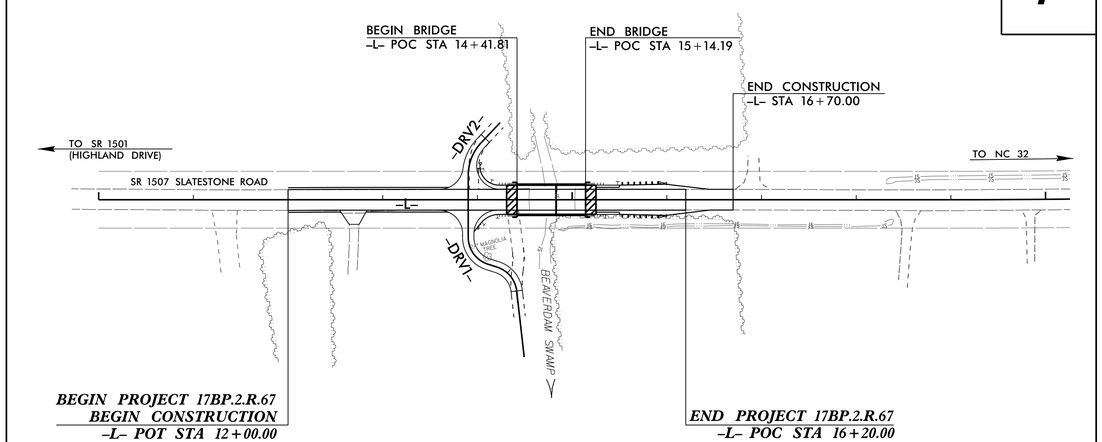


DOCUMENT NOT CONSIDERED FINAL UNLESS ALL SIGNATURES COMPLETED

## GRAPHIC SCALES

50 25 0 50 100
PLANS

50 25 0 50 100
PROFILE (HORIZONTAL)

10 5 0 10 20
PROFILE (VERTICAL)

## DESIGN DATA

ADT 2011 = 1700
ADT 2031 = 3400
K = 10 %
D = 60 %
T = 6 % *
V = 55 MPH
* TTST = 2% DUAL 4%
FUNC CLASS =
LOCAL
SUBREGIONAL TIER

## PROJECT LENGTH

| | | |
|---|---|---|
| LENGTH OF ROADWAY PROJECT 17BP.2.R.67 | = | 0.065 MILES |
| LENGTH OF STRUCTURE PROJECT 17BP.2.R.67 | = | 0.014 MILES |
| TOTAL LENGTH OF PROJECT 17BP.2.R.67 | = | 0.079 MILES |

Prepared In the Office of:

HNTB NORTH CAROLINA, P.C.
343 E. Six Forks Road, Suite 200
Raleigh, North Carolina 27609
NC License No: C-1554

2012 STANDARD SPECIFICATIONS

RIGHT OF WAY DATE:
OCTOBER 5, 2016

LETTING DATE:
APRIL 12, 2017

DAVID W. BASS, PE
PROJECT ENGINEER

MONICA J. DUVAL
PROJECT DESIGN ENGINEER

HON F. YEUNG, PE
NCDOT CONTACT

HYDRAULICS ENGINEER

NORTH CAROLINA PROFESSIONAL SEAL 15764 ENGINEER JAMES A. BYRD

DocuSigned by: James A. Byrd
2/14/2017 P.E.
SIGNATURE:

ROADWAY DESIGN ENGINEER

NORTH CAROLINA PROFESSIONAL SEAL 020107 ENGINEER DAVID W. BASS

DocuSigned by: David W. Bass
2/14/2017 P.E.
SIGNATURE:

STATE OF NORTH CAROLINA DEPARTMENT OF TRANSPORTATION

14-FEB-2017 08:06
\Roadway\Proj\060110_RDY_TSH.dgn
HNTB

8/17/99

| PROJECT REFERENCE NO. | SHEET NO. |
|---|---|
| 17BP.2.R.67 | 1A–1 |

ROADWAY DESIGN ENGINEER

NORTH CAROLINA PROFESSIONAL SEAL 020107 ENGINEER DAVID W. BASS

DocuSign Envelope ID: 0EEC6CBF-DA4B-47ED-8786-A2153F552466

David W. Bass, PE

2/3/2017

**DOCUMENT NOT CONSIDERED FINAL UNLESS ALL SIGNATURES COMPLETED**

# INDEX OF SHEETS



GENERAL NOTES: 2012 SPECIFICATIONS

EFFECTIVE: 01–17–2012
REVISED: 10–31–2014

GRADE LINE:
GRADING AND SURFACING:

THE GRADE LINES SHOWN DENOTE THE FINISHED ELEVATION OF THE PROPOSED SURFACING AT GRADE POINTS SHOWN ON THE TYPICAL SECTIONS. GRADE LINES MAY BE ADJUSTED AT THEIR BEGINNING AND ENDING AND AT STRUCTURES AS DIRECTED BY THE ENGINEER IN ORDER TO SECURE A PROPER TIE–IN.

CLEARING:

CLEARING ON THIS PROJECT SHALL BE PERFORMED TO THE LIMITS ESTABLISHED BY MODIFIED METHOD III.

SUPERELEVATION:

ALL CURVES ON THIS PROJECT SHALL BE SUPERELEVATED IN ACCORDANCE WITH STD. NO. 225.04 USING THE RATE OF SUPERELEVATION AND RUNOFF SHOWN ON THE PLANS. SUPERELEVATION IS TO BE REVOLVED ABOUT THE GRADE POINTS SHOWN ON THE TYPICAL SECTIONS.

SHOULDER CONSTRUCTION:

ASPHALT, EARTH, AND CONCRETE SHOULDER CONSTRUCTION ON THE HIGH SIDE OF SUPERELEVATED CURVES SHALL BE IN ACCORDANCE WITH STD. NO. 560.01

SIDE ROADS:

THE CONTRACTOR WILL BE REQUIRED TO DO ALL NECESSARY WORK TO PROVIDE SUITABLE CONNECTIONS WITH ALL ROADS, STREETS, AND DRIVES ENTERING THIS PROJECT. THIS WORK WILL BE PAID FOR AT THE CONTRACT UNIT PRICE FOR THE PARTICULAR ITEMS INVOLVED.

GUARDRAIL:

THE GUARDRAIL LOCATIONS SHOWN ON THE PLANS MAY BE ADJUSTED DURING CONSTRUCTION AS DIRECTED BY THE ENGINEER. THE CONTRACTOR SHOULD CONSULT WITH THE ENGINEER PRIOR TO ORDERING GUARDRAIL MATERIAL.

SUBSURFACE PLANS:

NO SUBSURFACE PLANS ARE AVAILABLE ON THIS PROJECT. THE CONTRACTOR SHOULD MAKE HIS OWN INVESTIGATION AS TO THE SUBSURFACE CONDITIONS.

END BENTS:

THE ENGINEER SHALL CHECK THE TRUCTURE END BENT PLANS, DETAILS, AND CROSS SECTION PRIOR TO SETTING OF THE SLOPE STAKES FOR THE EMBANKMENT OR EXCAVATION APPROCHING A BRIDGE.

UTILITIES:

UTILITY OWNERS ON THIS PROJECT ARE

POWER – CITY OF WASHINGTON
PHONE – TRI COUNTY TELEPHONE
CATV – SUDDENLINK
WATER – BEAUFORT COUNTY WATER

ANY RELOCATION OF EXISTING UTILITIES WILL BE ACCOMPLISHED BY OTHERS. EXCEPT AS SHOWN ON THE PLANS.

RIGHT–OF–WAY MARKERS:

ALL RIGHT–OF–WAY MARKERS ON THIS PROJECT SHALL BE PLACED BY OTHERS.

EFF. 01–17–2012
REV. 02–29–2016

2012 ROADWAY ENGLISH STANDARD DRAWINGS

The following Roadway Standards as appear in "Roadway Standard Drawings" Highway Design Branch – N. C. Department of Transportation – Raleigh, N. C., Dated January, 2012 are applicable to this project and by reference hereby are considered a part of these plans:

| STD.NO. | TITLE |
|---|---|
| DIVISION 2 – EARTHWORK | |
| 200.03 | Method of Clearing – Modified Method II |
| 225.02 | Guide for Grading Subgrade – Secondary and Local |
| 225.04 | Method of Obtaining Superelevation – Two Lane Pavement |
| DIVISION 3 – PIPE CULVERTS | |
| 300.01 | Method of Pipe Installation |
| 310.10 | Driveway Pipe Construction |
| DIVISION 4 – MAJOR STRUCTURES | |
| 422.10 | Reinforced Bridge Approach Fills |
| DIVISION 5 – SUBGRADE, BASES AND SHOULDERS | |
| 560.01 | Method of Shoulder Construction – High Side of Superelevated Curve – Method I |
| DIVISION 8 – INCIDENTALS | |
| 840.00 | Concrete Base Pad for Drainage Structures |
| 840.29 | Frames and Narrow Slot Flat Grates |
| 840.35 | Traffic Bearing Grated Drop Inlet – for Cast Iron Double Frame and Grates |
| 840.66 | Drainage Structure steps |
| 846.01 | Concrete Curb, Gutter and Curb & Gutter |
| 862.01 | Guardrail Placement |
| 862.02 | Guardrail Installation |
| 862.03 | Structure Anchor Units (Beg. March 2013 letting use detail in lieu of Standard) |
| 876.01 | Rip Rap in Channels |
| 876.02 | Guide for Rip Rap at Pipe Outlets |

24-JAN-2017 15:33
R:\Roadway\Proj\0601110_rdy_gen.dgn
mtb

04/06/15

| PROJECT REFERENCE NO. | SHEET NO. |
|---|---|
| 17BP.2.R.67 | 1B–1 |

STATE OF NORTH CAROLINA, DIVISION OF HIGHWAYS

# CONVENTIONAL PLAN SHEET SYMBOLS

*Note: Not to Scale* **S.U.E. = Subsurface Utility Engineering*

## BOUNDARIES AND PROPERTY:

- State Line
- County Line
- Township Line
- City Line
- Reservation Line
- Property Line
- Existing Iron Pin — EIP
- Property Corner
- Property Monument — ECM
- Parcel/Sequence Number — 123
- Existing Fence Line
- Proposed Woven Wire Fence
- Proposed Chain Link Fence
- Proposed Barbed Wire Fence
- Existing Wetland Boundary — WLB
- Proposed Wetland Boundary — WLB
- Existing Endangered Animal Boundary — EAB
- Existing Endangered Plant Boundary — EPB
- Existing Historic Property Boundary — HPB
- Known Contamination Area: Soil
- Potential Contamination Area: Soil
- Known Contamination Area: Water
- Potential Contamination Area: Water
- Contaminated Site: Known or Potential

## BUILDINGS AND OTHER CULTURE:

- Gas Pump Vent or U/G Tank Cap
- Sign — S
- Well — W
- Small Mine
- Foundation
- Area Outline
- Cemetery
- Building
- School
- Church
- Dam

## HYDROLOGY:

- Stream or Body of Water
- Hydro, Pool or Reservoir
- Jurisdictional Stream — JS
- Buffer Zone 1 — BZ 1
- Buffer Zone 2 — BZ 2
- Flow Arrow
- Disappearing Stream
- Spring
- Wetland
- Proposed Lateral, Tail, Head Ditch — FLOW
- False Sump

## RAILROADS:

- Standard Gauge — CSX TRANSPORTATION
- RR Signal Milepost — MILEPOST 35
- Switch — SWITCH
- RR Abandoned
- RR Dismantled

## RIGHT OF WAY:

- Baseline Control Point
- Existing Right of Way Marker
- Existing Right of Way Line
- Proposed Right of Way Line — RW
- Proposed Right of Way Line with Iron Pin and Cap Marker — RW
- Proposed Right of Way Line with Concrete or Granite R/W Marker — RW
- Proposed Control of Access Line with Concrete C/A Marker — CA
- Existing Control of Access — CA
- Proposed Control of Access — CA
- Existing Easement Line — E
- Proposed Temporary Construction Easement — E
- Proposed Temporary Drainage Easement — TDE
- Proposed Permanent Drainage Easement — PDE
- Proposed Permanent Drainage / Utility Easement — DUE
- Proposed Permanent Utility Easement — PUE
- Proposed Temporary Utility Easement — TUE
- Proposed Aerial Utility Easement — AUE
- Proposed Permanent Easement with Iron Pin and Cap Marker

## ROADS AND RELATED FEATURES:

- Existing Edge of Pavement
- Existing Curb
- Proposed Slope Stakes Cut — C
- Proposed Slope Stakes Fill — F
- Proposed Curb Ramp — CR
- Existing Metal Guardrail
- Proposed Guardrail
- Existing Cable Guiderail
- Proposed Cable Guiderail
- Equality Symbol
- Pavement Removal

## VEGETATION:

- Single Tree
- Single Shrub
- Hedge
- Woods Line
- Orchard
- Vineyard — Vineyard

## EXISTING STRUCTURES:

MAJOR:

- Bridge, Tunnel or Box Culvert — CONC
- Bridge Wing Wall, Head Wall and End Wall — CONC WW

MINOR:

- Head and End Wall — CONC HW
- Pipe Culvert
- Footbridge
- Drainage Box: Catch Basin, DI or JB — CB
- Paved Ditch Gutter
- Storm Sewer Manhole — S
- Storm Sewer — S

## UTILITIES:

POWER:

- Existing Power Pole
- Proposed Power Pole
- Existing Joint Use Pole
- Proposed Joint Use Pole
- Power Manhole — P
- Power Line Tower
- Power Transformer
- U/G Power Cable Hand Hole
- H-Frame Pole
- U/G Power Line LOS B (S.U.E.*) — P
- U/G Power Line LOS C (S.U.E.*) — P
- U/G Power Line LOS D (S.U.E.*) — P

TELEPHONE:

- Existing Telephone Pole
- Proposed Telephone Pole
- Telephone Manhole — T
- Telephone Pedestal — T
- Telephone Cell Tower
- U/G Telephone Cable Hand Hole
- U/G Telephone Cable LOS B (S.U.E.*) — T
- U/G Telephone Cable LOS C (S.U.E.*) — T
- U/G Telephone Cable LOS D (S.U.E.*) — T
- U/G Telephone Conduit LOS B (S.U.E.*) — TC
- U/G Telephone Conduit LOS C (S.U.E.*) — TC
- U/G Telephone Conduit LOS D (S.U.E.*) — TC
- U/G Fiber Optics Cable LOS B (S.U.E.*) — T FO
- U/G Fiber Optics Cable LOS C (S.U.E.*) — T FO
- U/G Fiber Optics Cable LOS D (S.U.E.*) — T FO

WATER:

- Water Manhole — W
- Water Meter
- Water Valve
- Water Hydrant
- U/G Water Line LOS B (S.U.E*) — W
- U/G Water Line LOS C (S.U.E*) — W
- U/G Water Line LOS D (S.U.E*) — W
- Above Ground Water Line — A/G Water

TV:

- TV Pedestal — C
- TV Tower
- U/G TV Cable Hand Hole — HH
- U/G TV Cable LOS B (S.U.E.*) — TV
- U/G TV Cable LOS C (S.U.E.*) — TV
- U/G TV Cable LOS D (S.U.E.*) — TV
- U/G Fiber Optic Cable LOS B (S.U.E.*) — TV FO
- U/G Fiber Optic Cable LOS C (S.U.E.*) — TV FO
- U/G Fiber Optic Cable LOS D (S.U.E.*) — TV FO

GAS:

- Gas Valve
- Gas Meter
- U/G Gas Line LOS B (S.U.E.*) — G
- U/G Gas Line LOS C (S.U.E.*) — G
- U/G Gas Line LOS D (S.U.E.*) — G
- Above Ground Gas Line — A/G Gas

SANITARY SEWER:

- Sanitary Sewer Manhole
- Sanitary Sewer Cleanout
- U/G Sanitary Sewer Line — SS
- Above Ground Sanitary Sewer — A/G Sanitary Sewer
- SS Forced Main Line LOS B (S.U.E.*) — FSS
- SS Forced Main Line LOS C (S.U.E.*) — FSS
- SS Forced Main Line LOS D (S.U.E.*) — FSS

MISCELLANEOUS:

- Utility Pole
- Utility Pole with Base
- Utility Located Object
- Utility Traffic Signal Box — S
- Utility Unknown U/G Line LOS B (S.U.E.*) — ?UTL
- U/G Tank; Water, Gas, Oil
- Underground Storage Tank, Approx. Loc. — UST
- A/G Tank; Water, Gas, Oil
- Geoenvironmental Boring
- U/G Test Hole LOS A (S.U.E.*)
- Abandoned According to Utility Records — AATUR
- End of Information — E.O.I.

| PROJECT REFERENCE NO. | SHEET NO. |
|---|---|
| 060110 | 1C-1 |
| LOCATION AND SURVEYS | |

# SURVEY CONTROL SHEET 060110

CONTROL DATA

BL

| POINT | DESC. | NORTH | EAST | ELEVATION | L STATION | OFFSET |
|---|---|---|---|---|---|---|
| 601101 | | 670446.6380 | 2614685.5470 | 37.12 | OUTSIDE PROJECT LIMITS | |
| BL3 | | 670364.4790 | 2615136.7920 | 37.13 | 14+50.97 | 15.32 LT |
| 601102 | | 670221.0360 | 2615700.7400 | 37.32 | 20+33.05 | 14.89 LT |

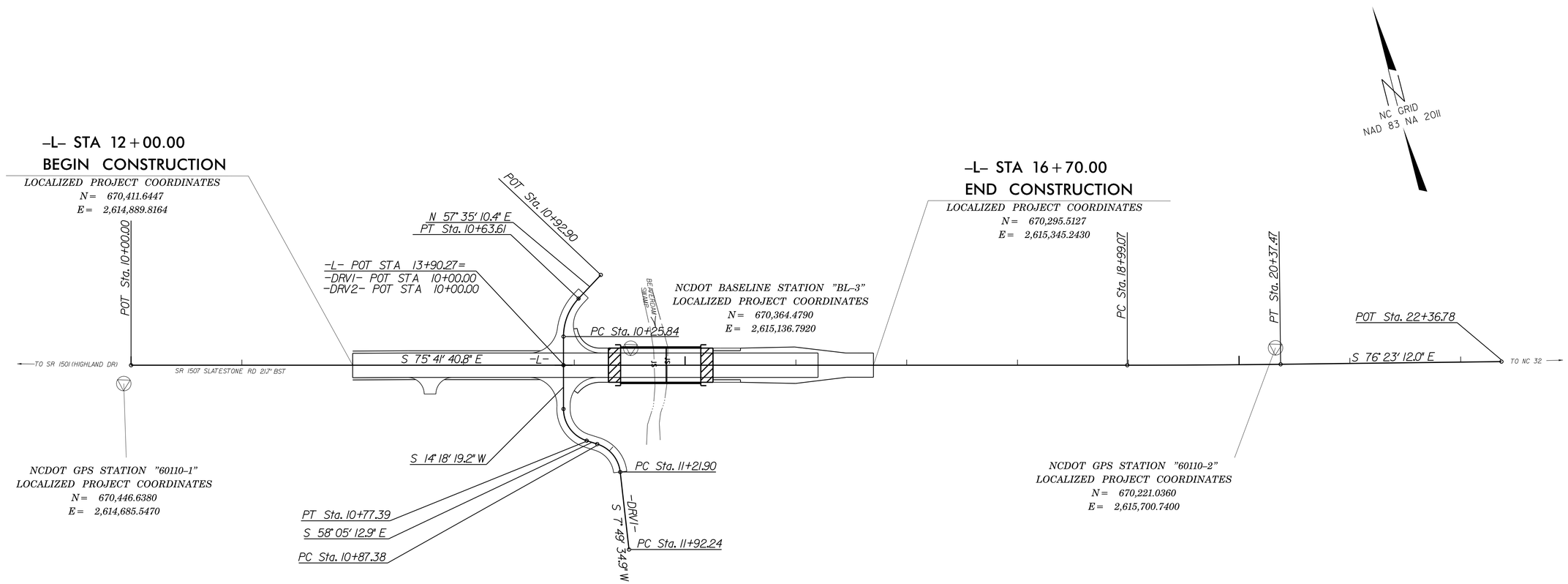


## DATUM DESCRIPTION

THE LOCALIZED COORDINATE SYSTEM DEVELOPED FOR THIS PROJECT IS BASED ON THE STATE PLANE COORDINATES ESTABLISHED BY NCGS FOR MONUMENT "060110-2"
WITH NAD 83/NA 2011STATE PLANE GRID COORDINATES OF
NORTHING: 670,221.036 (ft) EASTING: 2,615,700.740 (ft)
ELEVATION: 37.32 (ft)
THE AVERAGE COMBINED GRID FACTOR USED ON THIS PROJECT (GROUND TO GRID) IS: 0.999892319
THE N.C. LAMBERT GRID BEARING AND LOCALIZED HORIZONTAL GROUND DISTANCE FROM "060110-2" TO -L- STATION 12+00 IS
N 76°46'21.58" W 833.02 (ft)
ALL LINEAR DIMENSIONS ARE LOCALIZED HORIZONTAL DISTANCES
VERTICAL DATUM USED IS NAVD 88

**NOTE: DRAWING NOT TO SCALE**

*NOTES:*

*THE CONTROL DATA FOR THIS PROJECT CAN BE FOUND ELECTRONICALLY BY SELECTING PROJECT CONTROL DATA AT:*
*HTTP://WWW.NCDOT.GOV/DOH/PRECONSTRUCT/HIGHWAY/LOCATION/PROJECT/*

*THE FILES TO BE FOUND ARE AS FOLLOWS:*
*TIP 060110_LS_CONTROL.TXT*

*SITE CALIBRATION INFORMATION HAS NOT BEEN PROVIDED FOR THIS PROJECT. IF FURTHER INFORMATION IS NEEDED, PLEASE CONTACT THE LOCATION AND SURVEYS UNIT.*

▽ *INDICATES GEODETIC CONTROL MONUMENTS USED OR SET FOR HORIZONTAL PROJECT CONTROL BY THE NCDOT LOCATION AND SURVEYS UNIT.*
*PROJECT CONTROL ESTABLISHED USING GLOBAL POSITIONING SYSTEM.*

| PROJECT REFERENCE NO. | SHEET NO. |
|---|---|
| 060110 | 1C-2 |
| Location and Surveys | |

# SURVEY CONTROL SHEET 060110

*PRELIMINARY ROW /EASEMENT POINTS*

## ROW MARKER PERMANENT EASEMENT-E

| ALIGN | STATION | OFFSET | NORTH | EAST |
|---|---|---|---|---|
| L | 11+00.00 | -30.00 | 670465.4234 | 2614800.3299 |
| L | 11+00.00 | -60.00 | 670494.4932 | 2614807.7425 |
| L | 12+50.00 | 30.00 | 670370.2204 | 2614930.8534 |
| L | 13+50.00 | 45.00 | 670330.9766 | 2615024.0464 |
| L | 13+60.00 | -60.00 | 670430.2509 | 2615059.6771 |
| L | 13+60.00 | -30.00 | 670401.1811 | 2615052.2644 |
| L | 14+50.00 | 45.00 | 670306.2676 | 2615120.9456 |
| L | 14+65.00 | 80.00 | 670268.6466 | 2615126.8324 |
| L | 16+00.00 | 60.00 | 670254.6694 | 2615262.5882 |
| L | 16+50.00 | 30.00 | 670271.3847 | 2615318.4505 |
| L | 16+61.80 | 60.00 | 670239.3993 | 2615322.4719 |
| L | 16+61.80 | 30.00 | 670268.4691 | 2615329.8846 |
| L | 16+80.00 | -60.00 | 670351.1821 | 2615369.7556 |
| L | 16+80.00 | -30.01 | 670322.1238 | 2615362.3459 |
| L | 16+91.80 | 30.00 | 670261.0564 | 2615358.9544 |
| L | 16+91.80 | 60.00 | 670231.9866 | 2615351.5417 |

## DATUM DESCRIPTION

THE LOCALIZED COORDINATE SYSTEM DEVELOPED FOR THIS PROJECT
IS BASED ON THE STATE PLANE COORDINATES ESTABLISHED BY
NCGS FOR MONUMENT "060110-2"
WITH NAD 83/NA 2011STATE PLANE GRID COORDINATES OF
NORTHING: 670,221.036 (ft) EASTING: 2,615,700.740 (ft)
ELEVATION: 37.32 (ft)
THE AVERAGE COMBINED GRID FACTOR USED ON THIS PROJECT
(GROUND TO GRID) IS: 0.999892319
THE N.C. LAMBERT GRID BEARING AND
LOCALIZED HORIZONTAL GROUND DISTANCE FROM
"060110-2" TO -L- STATION 12+00 IS
N 76°46'21.58" W 833.02 (ft)
ALL LINEAR DIMENSIONS ARE LOCALIZED HORIZONTAL DISTANCES
VERTICAL DATUM USED IS NAVD 88

*NOTES:*

*THE CONTROL DATA FOR THIS PROJECT CAN BE FOUND ELECTRONICALLY BY SELECTING PROJECT CONTROL DATA AT:*
*HTTP://WWW.NCDOT.GOV/DOH/PRECONSTRUCT/HIGHWAY/LOCATION/PROJECT/*

*THE FILES TO BE FOUND ARE AS FOLLOWS:*
*TIP 060110_LS_CONTROL.TXT*

*SITE CALIBRATION INFORMATION HAS NOT BEEN PROVIDED FOR THIS PROJECT. IF FURTHER INFORMATION IS NEEDED, PLEASE CONTACT THE LOCATION AND SURVEYS UNIT.*

6/2/99

## PAVEMENT SCHEDULE

| | |
|---|---|
| C1 | PROP. APPROX. 1.5" ASPHALT CONCRETE SURFACE COURSE, TYPE SF9.5A, AT AN AVERAGE RATE OF 165 LBS. PER SQ. YARD |
| C2 | PROP. APPROX. 3" ASPHALT CONCRETE SURFACE COURSE, TYPE SF9.5A, AT AN AVERAGE RATE OF 165 LBS. PER SQ. YARD IN EACH OF TWO LAYERS. |
| C3 | PROP. VARIABLE DEPTH ASPHALT CONCRETE SURFACE COURSE, TYPE SF9.5A AT AN AVERAGE RATE OF 110 LBS. PER SQ. YARD PER INCH. DEPTH TO BE PLACED IN LAYERS NOT LESS THAN 1" IN DEPTH OR GREATER THAN 1.5" IN DEPTH. |
| E1 | PROP. APPROX. 5" ASPHALT CONCRETE BASE COURSE, TYPE B25.0B, AT AN AVERAGE RATE OF 570 LBS. PER SQ. YARD. |
| E2 | PROP. APPROX. 6" ASPHALT CONCRETE BASE COURSE, TYPE B25.0B, AT AN AVERAGE RATE OF 342 LBS. PER SQ. YARD IN EACH OF TWO LAYERS. |
| E3 | PROP. VARIABLE DEPTH ASPHALT CONCRETE BASE COURSE, TYPE B25.0B AT AN AVERAGE RATE OF 114 LBS. PER SQ. YARD PER INCH. DEPTH TO BE PLACED IN LAYERS NOT LESS THAN 3" IN DEPTH OR GREATER THAN 5.5" IN DEPTH. |
| J | PROP. 6" AGGREGATE BASE COURSE |
| R | SHOULDER BERM GUTTER |
| T | EARTH MATERIAL |
| U | EXISTING PAVEMENT |
| W | WEDGING (SEE DETAIL) |

ALL PAVEMENT EDGE SLOPES ARE 1:1 UNLESS SHOWN OTHERWISE

HNTB
HNTB NORTH CAROLINA, P.C.
343 E. Six Forks Road, Suite 200
Raleigh, North Carolina 27609
NC License No: C-1554

| PROJECT REFERENCE NO. | SHEET NO. |
|---|---|
| 17BP.2.R.67 | 2A-1 |

ROADWAY DESIGN ENGINEER

NORTH CAROLINA PROFESSIONAL SEAL 020107 ENGINEER DAVID W. BASS

DocuSigned by: David W. Bass, PE
6/3/2017

**DOCUMENT NOT CONSIDERED FINAL UNLESS ALL SIGNATURES COMPLETED**

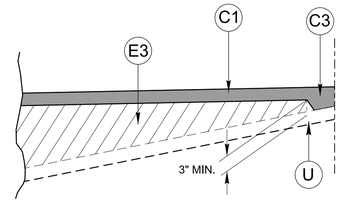


## DETAIL SHOWING METHOD OF WEDGING

SEE TYPICAL SECTIONS

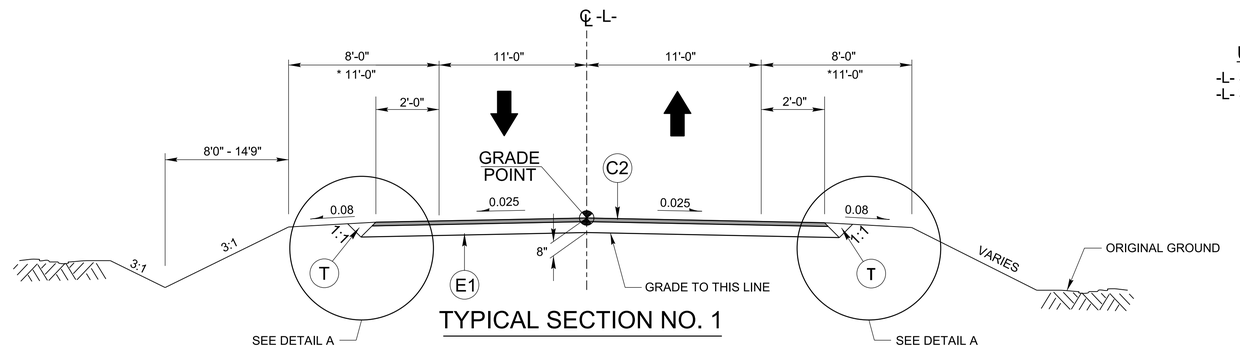


## TYPICAL SECTION NO. 1

USE TYPICAL SECTION NO. 1 FROM:

-L- STA 12+00.00 TO STA 14+41.81(BEGIN BRIDGE)
-L- STA 15+14.19(END BRIDGE) TO STA 16+20.00

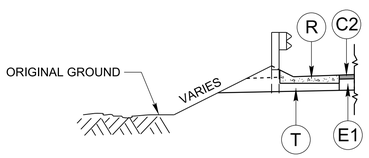


## DETAIL A

SHOULDER BERM GUTTER LOCATIONS

-L- STA 15+25.19 to STA 15+50.00 RT/LT

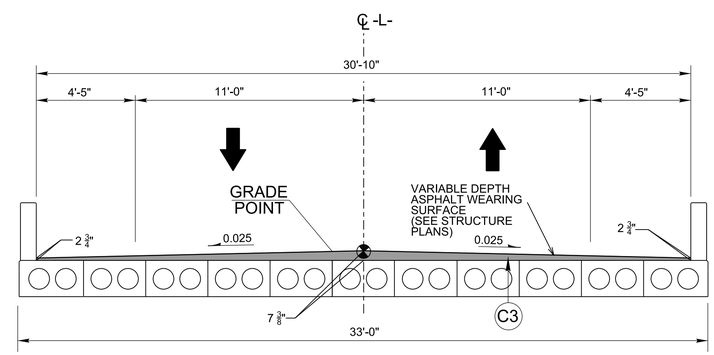


## TYPICAL SECTION NO. 2

CORED SLAB BRIDGE OVERLAY

USE TYPICAL SECTION NO. 2 FROM:

-L- STA 14+41.81 TO STA 15+14.19

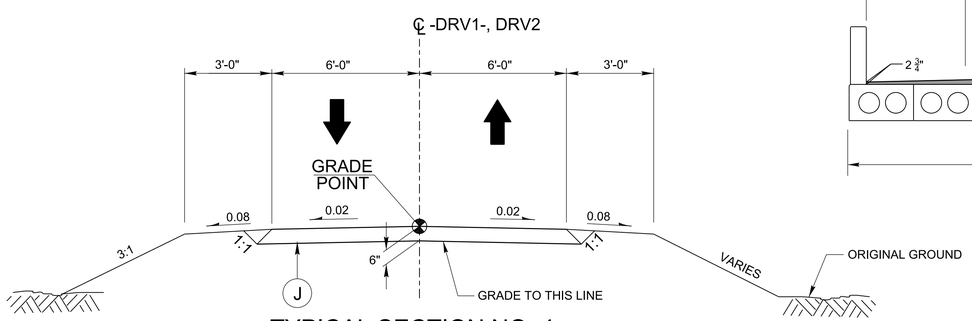


## TYPICAL SECTION NO. 4

-DRV1- STA 10+20.41 TO STA 11+36.00
-DRV2- STA 10+13.00 TO STA 10+70.00

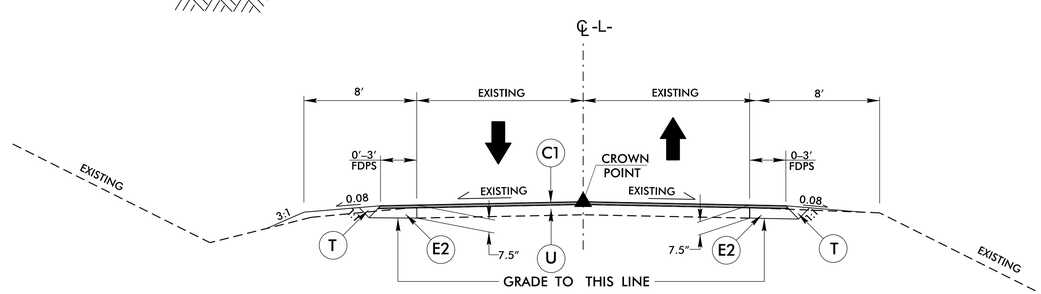


## TYPICAL SECTION NO. 3

USE TYPICAL SECTION NO. 3 FROM:

-L- STA 16+20.00 TO STA 16+70.00

NOTES: * SHOULDER WIDTH INCREASED 3' WITH THE USE OF GUARDRAIL

24-JAN-2017 15:43
R:\Roadway\Proj\2060110_rdy_typ.dgn
HNTB

$$$$$$$SYSTIME$$$$$
$$$$$$$$$$$$$$$$$$DGN$$$$$$$$$$$$$$$$
$$$$USERNAME$$$$

STATE OF NORTH CAROLINA
DEPT. OF TRANSPORTATION
DIVISION OF HIGHWAYS
RALEIGH, N.C.

ENGLISH DETAIL DRAWING FOR
**STRUCTURE ANCHOR UNITS**
GUARDRAIL ANCHOR UNIT, TYPE III FOR ATTACHMENT TO RAIL ON BRIDGE - SUB REGIONAL TIER

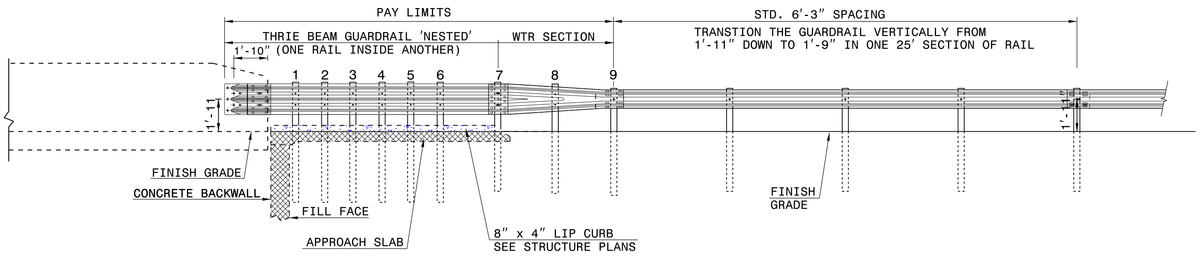


**ELEVATION**

NOTE:
**POST NOT REQUIRED FOR SKEW ANGLES GREATER THAN 150° OR LESS THAN 30° UNLESS OTHERWISE DIRECTED BY THE ENGINEER.
*THE DISTANCE FROM END OF BRIDGE RAIL TO CENTER LINE OF THE FIRST POST SHOULD BE 11½" IF CONCRETE BACKWALL IS NOT PRESENT.
-SHOULDER BERM GUTTER MUST BE INSTALLED TO THE LIMITS 8" x 4" LIP CURB IS SHOWN IF ANCHOR UNIT IS NOT ADJACENT TO AN APPROACH SLAB.
-MEASURE GUARDRAIL HEIGHT FROM THE TOP OF ADJACENT SURFACE (SHOULDER, BERM, OR GUTTER).
-LAP JOINTS IN THE DIRECTION OF TRAFFIC FLOW.
-SEE SHEET 5 FOR POST SECTIONS 1 THRU 9.

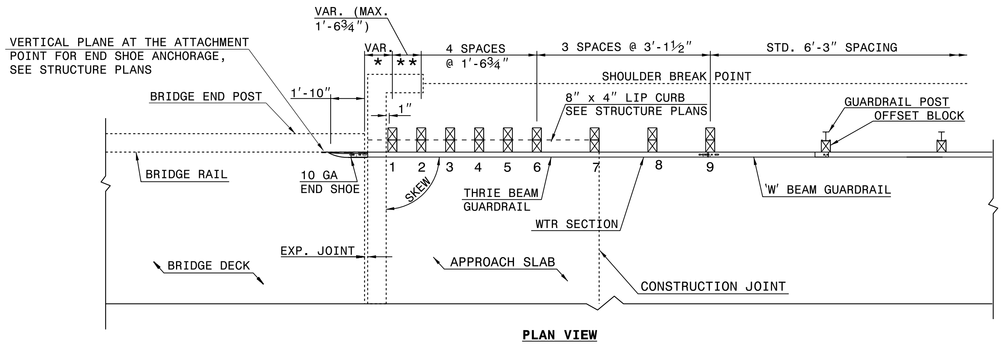


**PLAN VIEW**

## GUARDRAIL ANCHOR UNIT, TYPE III FOR ATTACHMENT TO RAIL ON BRIDGE - SUB REGIONAL TIER

SHEET 2 OF 7
**862d03**

STATE OF NORTH CAROLINA
DEPT. OF TRANSPORTATION
DIVISION OF HIGHWAYS
RALEIGH, N.C.

ENGLISH DETAIL DRAWING FOR
**STRUCTURE ANCHOR UNITS**
GUARDRAIL ANCHOR UNIT, TYPE III FOR ATTACHMENT TO RAIL ON BRIDGE - SUB REGIONAL TIER

SHEET 2 OF 7
862d03

STATE OF NORTH CAROLINA
DEPT. OF TRANSPORTATION
DIVISION OF HIGHWAYS
RALEIGH, N.C.

ENGLISH DETAIL DRAWING FOR
**STRUCTURE ANCHOR UNITS**
GUARDRAIL ANCHOR UNIT, TYPE III

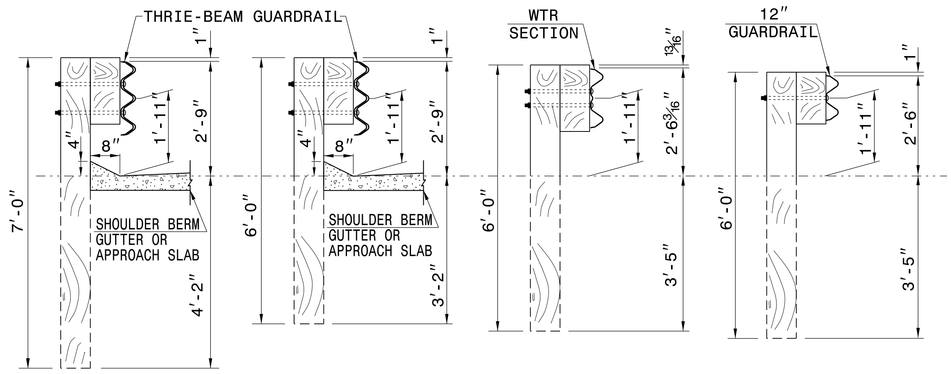


**SECTION OF THRIE BEAM POSTS 1 THRU 6**

**SECTION OF THRIE BEAM POST 7**

**SECTION OF WTR BEAM POST 8**

**SECTION OF 'W' BEAM POST 9**

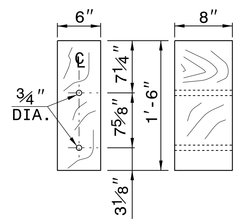


**THRIE BEAM OFFSET BLOCK**

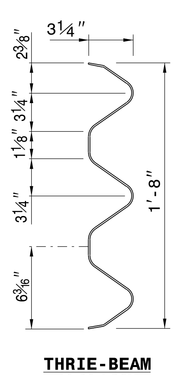


**THRIE-BEAM SECTION**

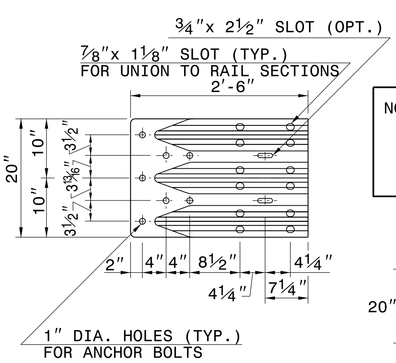


**END SHOE**

NOTE: THE MID POST AND OFFSET BLOCK OF THE WTR SECTION WILL REQUIRE SPECIAL BOLT HOLE DRILLING IN THE THRIE BEAM OFFSET BLOCK AND LINE POST.

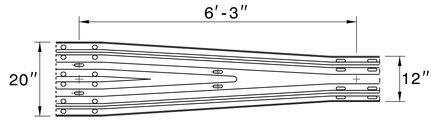


**WTR SECTION**
ELEVATION VIEW

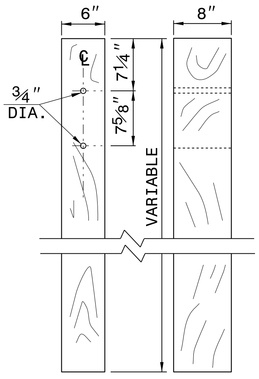


**THRIE BEAM LINE POST**

SHEET 3 OF 7
**862d03**

STATE OF NORTH CAROLINA
DEPT. OF TRANSPORTATION
DIVISION OF HIGHWAYS
RALEIGH, N.C.

ENGLISH DETAIL DRAWING FOR
**STRUCTURE ANCHOR UNITS**
GUARDRAIL ANCHOR UNIT, TYPE III

SHEET 3 OF 7
862d03

**CONTRACT STANDARDS AND DEVELOPMENT UNIT**
Office 919-707-6950 FAX 919-250-4119

**SEE TITLE BLOCK**

ORIGINAL BY: J. HOWERTON DATE: 06-22-12
MODIFIED BY: DATE:
CHECKED BY: DATE:
FILE SPEC.:

PROJECT REFERENCE NO. 17BP.2.R.67
SHEET NO. 2C-1

12/06/07

|  |  |
|---|---|
| COMPUTED BY: MONICA J. DUVAL | DATE: 09/14/16 |
| CHECKED BY: DAVID W. BASS, PE | DATE: 09/14/16 |

STATE OF NORTH CAROLINA
DIVISION OF HIGHWAYS

| PROJECT REFERENCE NO. | SHEET NO. |
|---|---|
| 17BP.2.R.67 | 3B–1 |

# SUMMARY OF EARTHWORK

| STATION | STATION | UNCL. EXCAV. | EMBANK. +% | BORROW | WASTE |
|---|---|---|---|---|---|
| –L– STA 12+00.00 | –L– STA 14+41.81(BRIDGE) | 305 | 114 | 0 | 191 |
|  |  |  |  |  |  |
| –L– STA 15+14.19(BRIDGE) | –L– STA 16+20.00 | 155 | 261 | 106 |  |
|  |  |  |  |  |  |
|  |  |  |  |  |  |
|  |  |  |  |  |  |
| SUBTOTALS: |  | 460 | 375 | 106 | 191 |
|  |  |  |  |  |  |
|  |  |  |  |  |  |
|  |  |  |  |  |  |
| WASTE IN LIEU OF BORROW |  |  |  | –106 | –106 |
|  |  |  |  |  |  |
| PROJECT TOTALS: |  | 460 |  | 0 | 85 |
|  |  |  |  |  |  |
|  |  |  |  |  |  |
|  |  |  |  |  |  |
|  |  |  |  |  |  |
|  |  |  |  |  |  |
| GRAND TOTALS: |  | 460 |  | 0 | 85 |
|  |  |  |  |  |  |
| SAY: |  | 500 |  | 0 | 85 |

Note: Approximate quantities only. Unclassified Excavation, Borrow Excavation, Fine Grading, Clearing and Grubbing, and Removal of Existing Pavement will be paid for at the contract lump sum price for "Grading."

Earthwork quantities are calculated by the Roadway Design Unit. These earthwork quantities are based in part on subsurface data provided by the Geotechnical Engineering Unit.

# PAVEMENT REMOVAL SUMMARY

| SURVEY LINE | STATION | STATION | LOCATION LT/RT/CL | $YD^2$ |
|---|---|---|---|---|
|  |  |  |  |  |
| –L– | 12+00.00 | 14+56.29 | CL | 623.18 |
| –L– | 15+03.08 | 16+20.00 | CL | 287.30 |
|  |  |  |  |  |
|  |  |  |  |  |
|  |  |  |  |  |
|  |  |  |  |  |
|  |  |  |  |  |
|  |  |  |  |  |
|  |  |  |  |  |
|  |  |  |  |  |
|  |  |  |  |  |
|  |  |  |  |  |
|  |  |  |  |  |
|  |  |  |  |  |
|  |  |  |  |  |
|  |  |  | TOTAL: | 910.48 |
|  |  |  |  |  |
| SAY: |  |  |  | 925 |

# SHOULDER BERM GUTTER SUMMARY

| SURVEY LINE | STATION | STATION | LENGTH (FT) |
|---|---|---|---|
|  |  |  |  |
| –L– (RT) | 15+25.19 | 15+50 | 24.81 |
| –L– (LT) | 15+25.19 | 15+50 | 24.81 |
|  |  |  |  |
|  |  |  |  |
|  |  |  |  |
|  |  |  |  |
|  |  |  |  |
|  |  |  |  |
|  |  |  |  |
|  |  |  |  |
|  |  |  |  |
|  |  |  |  |
| TOTAL: |  |  | 49.62 |
|  |  |  |  |
| SAY: |  |  | 55 |

# ROW AREA DATA SUMMARY

| PARCEL NO. | PROPERTY OWNERS NAMES | PERM. UTILTIY EASE. | PERM. DRAIN. EASE. | PERM. DRAINAGE UTILITY EASE. | CONST. EASE. |
|---|---|---|---|---|---|
|  |  |  |  |  |  |
| 1 | OTIS M. & DEBORAH C. ALLIGOOD | 7800 SF |  | 5076 SF | 625 SF |
| 2 | ANTHONY E. BOWEN |  | 3115.29 SF |  | 4655 SF |
| 3 | LINDON LEWIS ALLIGOOD | 900 SF | 5772.21 SF |  |  |
| 4 | JASPER W. FLEMING, HEIRS |  |  | 4523 SF |  |
|  |  |  |  |  |  |
|  |  |  |  |  |  |
|  |  |  |  |  |  |
|  |  |  |  |  |  |
|  |  |  |  |  |  |
|  |  |  |  |  |  |

# LIST OF PIPES, ENDWALLS, ETC. (FOR PIPES 48" & UNDER)

| STATION / SIZE / THICKNESS OR GAUGE | LOCATION (LT,RT, OR CL) | STRUCTURE NO. FROM | STRUCTURE NO. TO | TOP ELEVATION | INVERT ELEVATION | INVERT ELEVATION | SLOPE CRITICAL | CAAP 12" | CAAP 15" | CAAP 18" | CAAP 24" .064 | CAAP 30" .079 | CAAP 36" | CAAP 42" .109 | CAAP 48" |
|---|---|---|---|---|---|---|---|---|---|---|---|---|---|---|---|
| –L– 15+48.00 | RT | 0401 |  | 37.78 |  |  |  |  |  |  |  |  |  |  |  |
|  |  | 0401 | 0402 |  | 33.95 | 33.70 |  |  |  |  |  |  |  |  |  |
| –L– 15+48.00 | LT | 0402 |  | 37.78 |  |  |  |  |  |  |  |  |  |  |  |
|  |  | 0402 | OUT |  | 33.70 | 32.73 |  |  |  |  |  |  |  |  |  |
|  |  |  |  |  |  |  |  |  |  |  |  |  |  |  |  |
| –L– 13+90.00 | RT |  |  |  |  |  |  |  |  |  | 44 |  |  |  |  |
| –L– 13+95.70 | LT |  |  |  |  |  |  |  |  |  |  |  |  | 48 |  |
|  |  |  |  |  |  |  |  |  |  |  |  |  |  |  |  |
|  |  |  |  |  |  |  |  |  |  |  |  |  |  |  |  |
| TOTAL |  |  |  |  |  |  |  |  |  |  | 44 |  |  | 48 |  |

| STATION | BITUMINOUS COATED C.S. PIPE TYPE B (UNLESS NOTED OTHERWISE) 12" .064 | 15" .064 | 18" .064 | 24" .064 | 24" | 30" .079 | 30" | 36" .079 | 36" | 42" .109 | 42" | 48" .109 | 48" |
|---|---|---|---|---|---|---|---|---|---|---|---|---|---|
| –L– 15+48.00 |  |  |  |  |  |  |  |  |  |  |  |  |  |
|  |  |  |  |  |  |  |  |  |  |  |  |  |  |
| –L– 15+48.00 |  |  |  |  |  |  |  |  |  |  |  |  |  |
|  |  |  |  |  |  |  |  |  |  |  |  |  |  |
|  |  |  |  |  |  |  |  |  |  |  |  |  |  |
| –L– 13+90.00 |  |  |  |  |  |  |  |  |  |  |  |  |  |
| –L– 13+95.70 |  |  |  |  |  |  |  |  |  |  |  |  |  |
|  |  |  |  |  |  |  |  |  |  |  |  |  |  |
|  |  |  |  |  |  |  |  |  |  |  |  |  |  |
| TOTAL |  |  |  |  |  |  |  |  |  |  |  |  |  |

| STATION | CLASS III R.C. PIPE OR ALUMINIZED C.S. PIPE, TYPE IR OR HDPE PIPE, TYPE S OR D 12" | 15" | 18" | 24" | 30" | 36" | 42" | 48" | 15" SIDE DRAIN PIPE | 18" SIDE DRAIN PIPE | 24" SIDE DRAIN PIPE | ENDWALLS STD. 838.01, STD. 838.11 OR STD. 838.80 (UNLESS NOTED OTHERWISE) CU. YDS. R.C.P. | C.S.P. | QUANTITIES FOR DRAINAGE STRUCTURES * TOTAL L.F. FOR PAY QUANTITY SHALL BE COL. 'A' + (1.3 X COL.'B') PER EACH (0' THRU 5.0') | LIN. *FT. A 5.0' THRU 10.0' | LIN. *FT. B 10.0' AND ABOVE | C.B. STD. 840.01 OR STD. 840.02 | FRAME, GRATES AND HOOD STANDARD 840.03 TYPE OF GRATE E | F | G |  |
|---|---|---|---|---|---|---|---|---|---|---|---|---|---|---|---|---|---|---|---|---|---|
| –L– 15+48.00 |  |  |  |  |  |  |  |  |  |  |  |  |  | 1 |  |  |  |  |  |  |  |
|  |  | 28 |  |  |  |  |  |  |  |  |  |  |  |  |  |  |  |  |  |  |  |
| –L– 15+48.00 |  |  |  |  |  |  |  |  |  |  |  |  |  | 1 |  |  |  |  |  |  |  |
|  |  | 16 |  |  |  |  |  |  |  |  |  |  |  |  |  |  |  |  |  |  |  |
|  |  |  |  |  |  |  |  |  |  |  |  |  |  |  |  |  |  |  |  |  |  |
| –L– 13+90.00 |  |  |  |  |  |  |  |  |  |  |  |  |  |  |  |  |  |  |  |  |  |
| –L– 13+95.70 |  |  |  |  |  |  |  |  |  |  |  |  |  |  |  |  |  |  |  |  |  |
|  |  |  |  |  |  |  |  |  |  |  |  |  |  |  |  |  |  |  |  |  |  |
|  |  |  |  |  |  |  |  |  |  |  |  |  |  |  |  |  |  |  |  |  |  |
| TOTAL |  | 44 |  |  |  |  |  |  |  |  |  |  |  | 2 |  |  |  |  |  |  |  |

| STATION |  | D.I. STD. 840.14 OR STD. 840.15 | D.I. FRAME & GRATE STD. 840.16 | G.D.I. TYPE "A" STD. 840.17 OR 840.26 | G.D.I. TYPE "B" STD. 840.18 OR 840.27 | G.D.I. TYPE "D" STD. 840.19 OR 840.28 | G.D.I. FRAME WITH GRATE STD. 840.22 | G.D.I. FRAME WITH TWO GRATES STD. 840.22 | G.D.I. (N.S.) FRAME WITH GRATE STD. 840.24 | G.D.I. (N.S.) FRAME WITH TWO GRATES STD. 840.24 | J.B. STD. 840.31 OR 840.32 | TB GRATED D.I., TYPE 'B' STD. 840.35 | T.B.D.I. (N.S.) FRAME AND TWO GRATES STD. 840.29 |  |  |  |  | CORR. STEEL ELBOWS NO. & SIZE | CONC. COLLARS CL. "B" C.Y. STD 840.72 | CONC. & BRICK PIPE PLUG, C.Y. STD. 840.71 | PIPE REMOVAL LIN.FT. | REMARKS |
|---|---|---|---|---|---|---|---|---|---|---|---|---|---|---|---|---|---|---|---|---|---|---|
| –L– 15+48.00 |  |  |  |  |  |  |  |  |  |  |  | 1 | 1 |  |  |  |  |  |  |  |  |  |
|  |  |  |  |  |  |  |  |  |  |  |  |  |  |  |  |  |  |  |  |  |  |  |
| –L– 15+48.00 |  |  |  |  |  |  |  |  |  |  |  | 1 | 1 |  |  |  |  |  |  |  |  |  |
|  |  |  |  |  |  |  |  |  |  |  |  |  |  |  |  |  |  |  |  |  |  |  |
|  |  |  |  |  |  |  |  |  |  |  |  |  |  |  |  |  |  |  |  |  |  |  |
| –L– 13+90.00 |  |  |  |  |  |  |  |  |  |  |  |  |  |  |  |  |  |  |  |  |  | REMOVE 44' OF EXISTING 18" CMP |
| –L– 13+95.70 |  |  |  |  |  |  |  |  |  |  |  |  |  |  |  |  |  |  |  |  |  | REMOVE 20' OF EXISTING 42" CMP |
|  |  |  |  |  |  |  |  |  |  |  |  |  |  |  |  |  |  |  |  |  |  |  |
|  |  |  |  |  |  |  |  |  |  |  |  |  |  |  |  |  |  |  |  |  |  |  |
| TOTAL |  |  |  |  |  |  |  |  |  |  |  | 2 | 2 |  |  |  |  |  |  |  |  |  |

ABBREVIATIONS

| | |
|---|---|
| C.B. | CATCH BASIN |
| N.D.I. | NARROW DROP INLET |
| D.I. | DROP INLET |
| G.D.I. | GRATED DROP INLET |
| G.D.I. (N.S.) | GRATED DROP INLET (NARROW SLOT) |
| J.B. | JUNCTION BOX |
| M.H. | MANHOLE |
| T.B.D.I. | TRAFFIC BEARING DROP INLET |
| T.B.J.B. | TRAFFIC BEARING JUNCTION BOX |

"N" = DISTANCE FROM EDGE OF LANE TO FACE OF GUARDRAIL.
TOTAL SHOULDER WIDTH = DISTANCE FROM EDGE OF TRAVEL LANE TO SHOULDER BREAK POINT.
FLARE LENGTH = DISTANCE FROM LAST SECTION OF PARALLEL GUARDRAIL TO END OF GUARDRAIL.
W = TOTAL WIDTH OF FLARE FROM BEGINNING OF TAPER TO END OF GUARDRAIL.
G = GATING IMPACT ATTENUATOR TYPE 350
NG = NON–GATING IMPACT ATTENUATOR TYPE 350

# GUARDRAIL SUMMARY

| SURVEY LINE | BEG. STA. | END STA. | LOCATION | LENGTH STRAIGHT | LENGTH SHOP CURVED | LENGTH DOUBLE FACED | WARRANT POINT APPROACH END | WARRANT POINT TRAILING END | "N" DIST. FROM E.O.L. | TOTAL SHOUL. WIDTH |
|---|---|---|---|---|---|---|---|---|---|---|
| –L– | STA 14+01.00 | STA 14+41.81(BRIDGE) | RT | 25' | 25' |  | STA 14+41.81(BRIDGE) |  | 4.42' | 9' |
|  | STA 15+14.19(BRIDGE) | STA 16+50.00 | RT | 87.50' |  |  |  | STA 15+14.19(BRIDGE) | 4.42' | 9' |
|  | STA 14+00.00 | STA 14+41.81(BRIDGE) | LT | 25' | 25' |  |  | STA 14+41.81(BRIDGE) | 4.42' | 9' |
|  | STA 15+14.19(BRIDGE) | STA 16+50.00 | LT | 87.50' |  |  | STA 15+14.19(BRIDGE) |  | 4.42' | 9' |
|  |  |  |  |  |  |  |  |  |  |  |
|  |  |  |  |  |  |  |  |  |  |  |
|  |  |  | SUBTOTAL: | 225' | 50' |  |  |  |  |  |
|  |  |  | ANCHOR DEDUCTIONS: |  |  |  |  |  |  |  |
|  |  |  | GRAU 350: 2@50' | –100 |  |  |  |  |  |  |
|  |  |  | TYPE III:4@18.75' | –75' |  |  |  |  |  |  |
|  |  |  | AT–1:2@6.25' | –12.5' |  |  |  |  |  |  |
|  |  |  | TOTAL: | 37.5' | 50' |  |  |  |  |  |
|  |  |  | SAY: | 50' |  |  |  |  |  |  |
|  |  |  | 5 ADDITIONAL POST |  |  |  |  |  |  |  |

| LOCATION | FLARE LENGTH APPROACH END | FLARE LENGTH TRAILING END | W APPROACH END | W TRAILING END | ANCHORS XI MOD | TYPE III | GRAU 350 | M–350 | XIII | CAT–1 | VI MOD | BIC | AT–1 | IMPACT ATTENUATOR TYPE 350 EA | G | NG | SINGLE FACED GUARDRAIL | REMOVE EXISTING GUARDRAIL | REMOVE AND STOCKPILE EXISTING GUARDRAIL | REMARKS |
|---|---|---|---|---|---|---|---|---|---|---|---|---|---|---|---|---|---|---|---|---|
| RT |  |  |  |  |  | 1 |  |  |  |  |  |  | 1 |  |  |  |  |  |  |  |
| RT |  |  |  |  |  | 1 | 1 |  |  |  |  |  |  |  |  |  |  |  |  |  |
| LT |  |  |  |  |  | 1 |  |  |  |  |  |  | 1 |  |  |  |  |  |  |  |
| LT |  |  |  |  |  | 1 | 1 |  |  |  |  |  |  |  |  |  |  |  |  |  |
|  |  |  |  |  |  |  |  |  |  |  |  |  |  |  |  |  |  |  |  |  |
|  |  |  |  |  |  |  |  |  |  |  |  |  |  |  |  |  |  |  |  |  |
| SUBTOTAL: |  |  |  |  |  |  |  |  |  |  |  |  |  |  |  |  |  |  |  |  |
| ANCHOR DEDUCTIONS: |  |  |  |  |  |  |  |  |  |  |  |  |  |  |  |  |  |  |  |  |
| GRAU 350: 2@50' |  |  |  |  |  |  |  |  |  |  |  |  |  |  |  |  |  |  |  |  |
| TYPE III:4@18.75' |  |  |  |  |  |  |  |  |  |  |  |  |  |  |  |  |  |  |  |  |
| AT–1:2@6.25' |  |  |  |  |  |  |  |  |  |  |  |  |  |  |  |  |  |  |  |  |
| TOTAL: |  |  |  |  |  |  |  |  |  |  |  |  |  |  |  |  |  |  |  |  |
| SAY: |  |  |  |  |  |  |  |  |  |  |  |  |  |  |  |  |  |  |  |  |
| 5 ADDITIONAL POST |  |  |  |  |  | 4 | 2 |  |  |  |  |  | 2 |  |  |  |  |  |  |  |

03-FEB-2017 14:17
\Roadway\Proj\060110_rdy_sum.dgn
HNTB

DocuSign Envelope ID: 0EEC6CBF-DA4B-47ED-8786-A2153F552466

**HNTB** HNTB NORTH CAROLINA, P.C.
343 E. Six Forks Road, Suite 200
Raleigh, North Carolina 27609
NC License No: C-1554

| PROJECT REFERENCE NO. | SHEET NO. |
|---|---|
| 17BP.2.R.67 | 4 |
| R/W SHEET NO. | |

| ROADWAY DESIGN ENGINEER | HYDRAULICS ENGINEER |
|---|---|
| SEAL 020107<br>DAVID W. BASS<br>DocuSigned by: David W. Bass, PE<br>2/3/2017<br>FF091E1C288F478... | SEAL 15764<br>JAMES A. BYRD<br>DocuSigned by: James A. Byrd<br>2/3/2017<br>23592959E54F47C... |

**DOCUMENT NOT CONSIDERED FINAL UNLESS ALL SIGNATURES COMPLETED**

8/17/99

REVISIONS

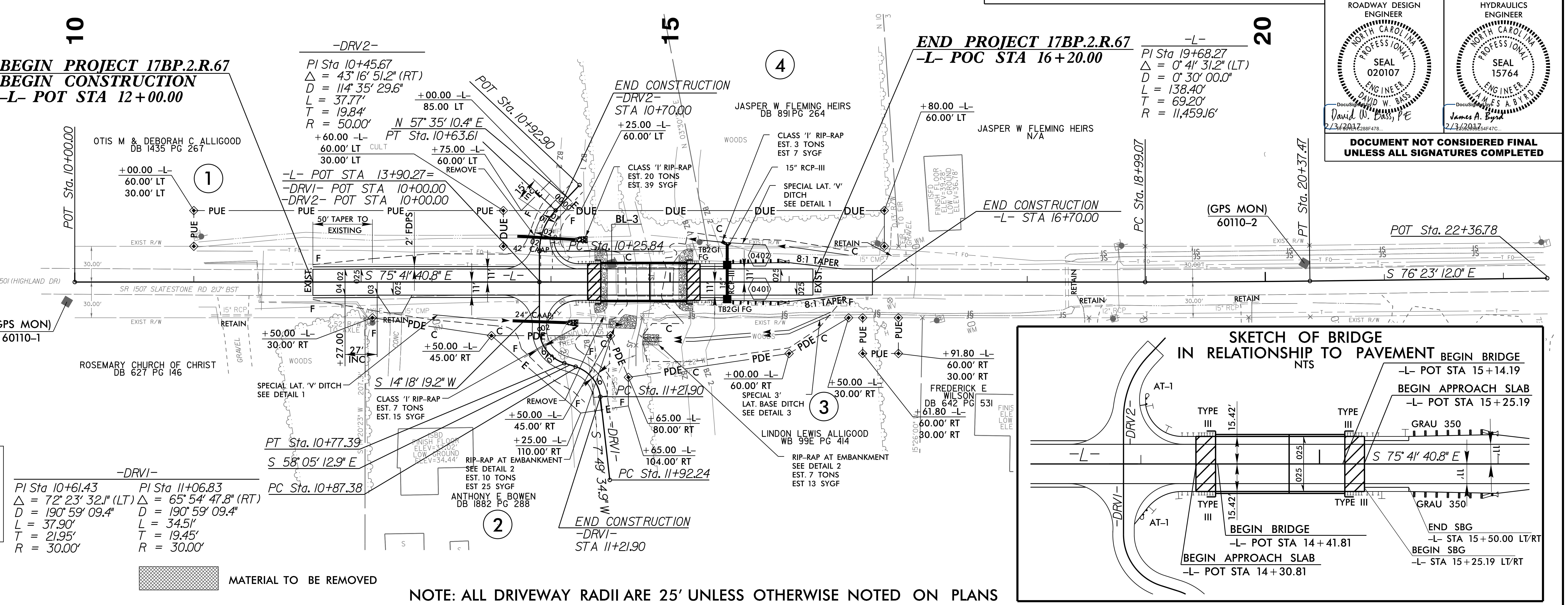

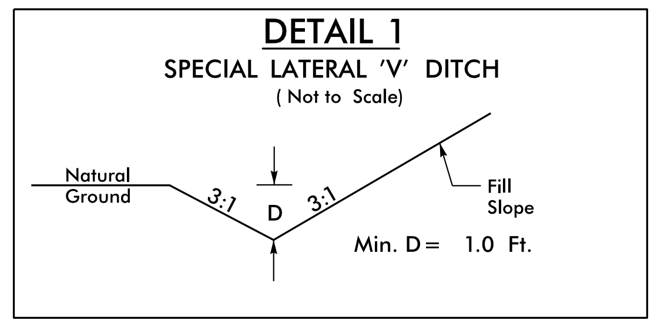

## DETAIL 1

SPECIAL LATERAL 'V' DITCH

( Not to Scale)

FROM -L- STA. 12+80 TO STA. 14+64 RT.
FROM -L- STA. 15+15 TO STA. 16+50 LT.

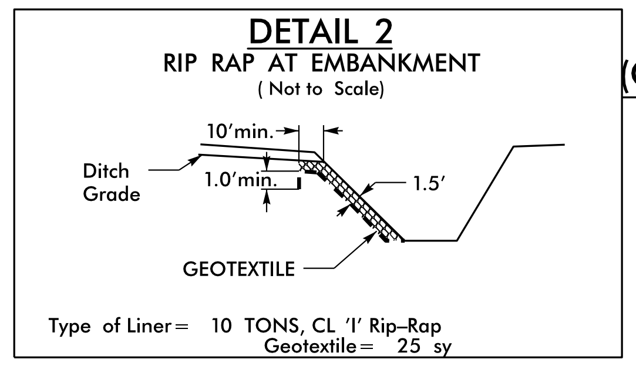

## DETAIL 2

RIP RAP AT EMBANKMENT

( Not to Scale)

Type of Liner = 10 TONS, CL 'I' Rip-Rap
Geotextile = 25 sy

FROM -L- STA. 14+50 TO STA. 14+70 RT.
FROM - L- STA. 14+77 TO STA. 14+91 RT.

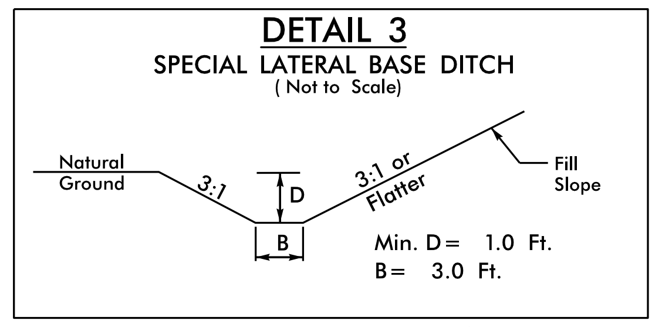

## DETAIL 3

SPECIAL LATERAL BASE DITCH

( Not to Scale)

FROM -L- STA. 14+80 TO STA. 16+25 RT.

▨ MATERIAL TO BE REMOVED

NOTE: ALL DRIVEWAY RADII ARE 25' UNLESS OTHERWISE NOTED ON PLANS

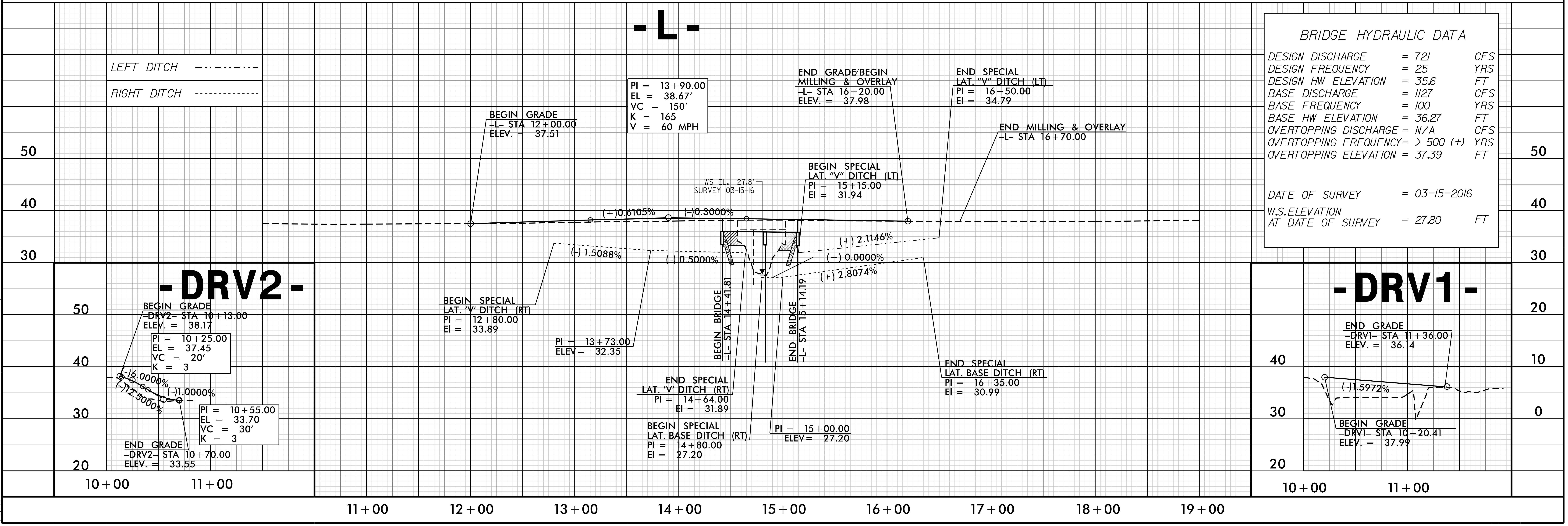

## BRIDGE HYDRAULIC DATA

| | | |
|---|---|---|
| DESIGN DISCHARGE | = 721 | CFS |
| DESIGN FREQUENCY | = 25 | YRS |
| DESIGN HW ELEVATION | = 35.6 | FT |
| BASE DISCHARGE | = 1127 | CFS |
| BASE FREQUENCY | = 100 | YRS |
| BASE HW ELEVATION | = 36.27 | FT |
| OVERTOPPING DISCHARGE | = N/A | CFS |
| OVERTOPPING FREQUENCY | = > 500 (+) | YRS |
| OVERTOPPING ELEVATION | = 37.39 | FT |
| DATE OF SURVEY | = 03-15-2016 | |
| W.S. ELEVATION AT DATE OF SURVEY | = 27.80 | FT |

03-FEB-2017 14:23
\Roadway\Proj\060110_rdy_psh4.dgn
HNTB

# STATE OF NORTH CAROLINA
# DIVISION OF HIGHWAYS

# *TRANSPORTATION MANAGEMENT PLAN*

# *BEAUFORT COUNTY*

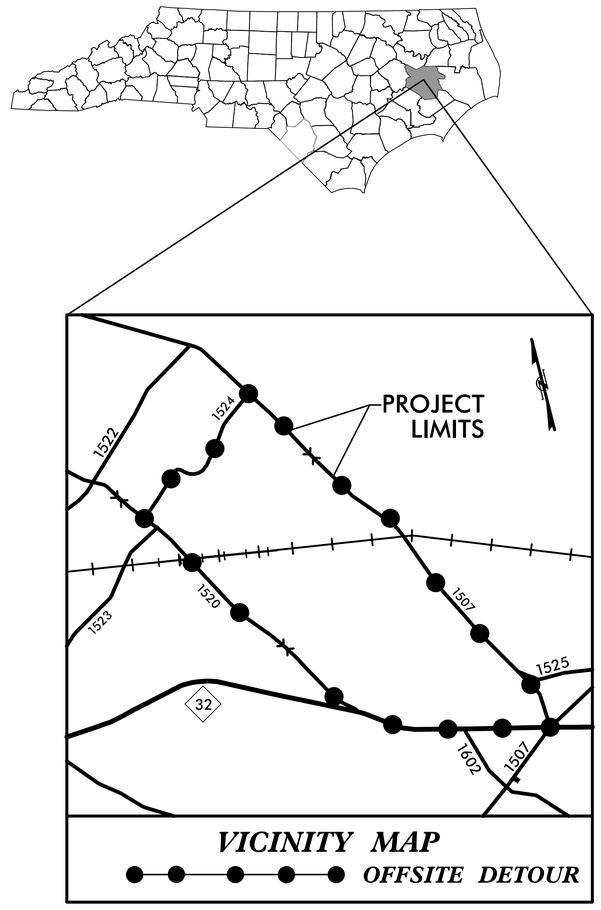


*VICINITY MAP*

*OFFSITE DETOUR*

## *LOCATION: REPLACE BRIDGE NO. 110 OVER BEAVERDAM SWAMP ON SR 1507 (SLATESTONE ROAD)*

## *INDEX OF SHEETS*



## *ROADWAY STANDARD DRAWINGS*

THE FOLLOWING ROADWAY STANDARDS AS SHOWN IN "ROADWAY STANDARD DRAWINGS" PROJECT SERVICES UNIT - N.C. DEPARTMENT OF TRANSPORTATION - RALEIGH, N.C. DATED JAN 2012 ARE APPLICABLE TO THIS PROJECT AND BY REFERENCE HEREBY ARE CONSIDERED A PART OF THESE PLANS:

| STD. NO. | TITLE |
|---|---|
| 1101.03 | TEMPORARY ROAD CLOSURES |
| 1101.11 | TRAFFIC CONTROL DESIGN TABLES |
| 1110.01 | STATIONARY WORK ZONE SIGNS |
| 1145.01 | BARRICADES |
| 1205.01 | PAVEMENT MARKINGS - LINE TYPES & OFFSETS |
| 1205.02 | PAVEMENT MARKINGS - 2 LANE & MULTILANE ROADWAYS |
| 1205.12 | PAVEMENT MARKINGS - BRIDGES |
| 1250.01 | PAVEMENT MARKER SPACING |
| 1251.01 | RAISED PAVEMENT MARKERS - PERMANENT AND TEMPORARY |
| 1261.01 | GUARDRAIL AND BARRIER DELINEATOR SPACING |
| 1261.02 | GUARDRAIL AND BARRIER DELINEATOR TYPE |
| 1262.01 | GUARDRAIL END DELINEATION |

R. B. EARLY, PE — *TRAFFIC CONTROL PROJECT ENGINEER*

J. A. PHILLIPS — *TRAFFIC CONTROL DESIGN ENGINEER*

**DOCUMENT NOT CONSIDERED FINAL UNLESS ALL SIGNATURES COMPLETED**

*WORK ZONE SAFETY & MOBILITY*
*"from the MOUNTAINS to the COAST"*


*N.C.D.O.T. WORK ZONE TRAFFIC CONTROL*
*1561 MAIL SERVICE CENTER (MSC) RALEIGH, NC 27699-1561*
*750 N. GREENFIELD PARKWAY, GARNER, NC 27529 (DELIVERY)*
*PHONE: (919) 773-2800 FAX: (919) 771-2745*

S.J. HAMILTON, PE, CPM — *DIVISION TRAFFIC ENGINEER*


DIVISION OF HIGHWAYS * STATE OF NORTH CAROLINA * DEPARTMENT OF TRANSPORTATION * WORK ZONE TRAFFIC CONTROL


HNTB

HNTB NORTH CAROLINA, P.C.
343 E. Six Forks Road, Ste 200
Raleigh, North Carolina 27609
NC License No: C-1554


*APPROVED:* DocuSigned by: Rhonda B. Early
*DATE:* 9/25/2017 | 4:28:34 PM PDT
6B6F48A...

*SEAL*

NORTH CAROLINA PROFESSIONAL SEAL 023521 ENGINEER RHONDA B. EARLY

SHEET NO.
TMP-1

*17BP.2.R.67*

*TIP PROJECT:*

9:55:49 AM
...\BRIO_tc_TCP_01_title.dgn
HNTB

| PROJ. REFERENCE NO. | SHEET NO. |
|---|---|
| 17BP.2.R.67 | TMP-2 |

# GENERAL NOTES

CHANGES MAY BE REQUIRED WHEN PHYSICAL DIMENSIONS IN THE DETAIL DRAWINGS, STANDARD DETAILS AND ROADWAY DETAILS ARE NOT ATTAINABLE TO MEET FIELD CONDITIONS OR RESULT IN THE DUPLICATE OR UNDESIRED OVERLAPPING OF DEVICES. MODIFICATIONS MAY INCLUDE: MOVING, SUPPLEMENTING, COVERING, OR REMOVAL OF DEVICES AS DIRECTED BY THE ENGINEER.

THE FOLLOWING GENERAL NOTES APPLY AT ALL THE TIMES FOR THE DURATION OF THE CONSTRUCTION PROJECT EXCEPT WHEN OTHERWISE NOTED IN THE PLAN OR DIRECTED BY THE ENGINEER.

## LANE AND SHOULDER CLOSURE REQUIREMENTS

A) REMOVE LANE CLOSURE DEVICES FROM THE LANE WHEN WORK IS NOT BEING PERFORMED BEHIND THE LANE CLOSURE OR WHEN A LANE CLOSURE IS NO LONGER NEEDED OR AS DIRECTED BY THE ENGINEER.

## TRAFFIC PATTERN ALTERATIONS

B) NOTIFY THE ENGINEER TWENTY ONE (21) CALENDAR DAYS PRIOR TO ANY TRAFFIC PATTERN ALTERATION.

## SIGNING

C) PROVIDE SIGNING AND DEVICES REQUIRED TO CLOSE THE ROAD ACCORDING TO THE ROADWAY STANDARD DRAWINGS AND TRAFFIC CONTROL PLANS.

PROVIDE SIGNING REQUIRED FOR THE OFF-SITE DETOUR ROUTE AS SHOWN ON THIS SHEET.

D) COVER OR REMOVE ALL SIGNS AND DEVICES REQUIRED TO CLOSE THE ROAD WHEN ROAD CLOSURE IS NOT IN OPERATION.

COVER OR REMOVE ALL SIGNS REQUIRED FOR THE OFF-SITE DETOUR WHEN THE DETOUR IS NOT IN OPERATION.

E) ENSURE ALL NECESSARY SIGNING IS IN PLACE PRIOR TO ALTERING ANY TRAFFIC PATTERN.

## TRAFFIC CONTROL DEVICES

F) PLACE TYPE III BARRICADES, WITH "ROAD CLOSED" SIGN R11-2 ATTACHED, OF SUFFICIENT LENGTH TO CLOSE ENTIRE ROADWAY.

## PAVEMENT MARKING AND MARKERS

G) INSTALL PAVEMENT MARKINGS ON THE FINAL SURFACE AS FOLLOWS:

| ROAD NAME | MARKING | MARKERS |
|---|---|---|
| SR 1507 (SLATESTONE RD) | PAINT | RAISED |

H) TIE PROPOSED PAVEMENT MARKING LINES TO EXISTING PAVEMENT MARKING LINES.

I) REMOVE/REPLACE ANY CONFLICTING/DAMAGED PAVEMENT MARKINGS.

J) PASSING ZONE WILL BE DETERMINED IN THE FIELD AND MUST BE APPROVED BY THE ENGINEER.

# PHASING

## PHASE I

PRIOR TO ANY CONSTRUCTION OPERATIONS, PLACE AND COVER OFF-SITE DETOUR SIGNS AS SHOWN AND IN ACCORDANCE WITH RSD 1101.03 (SHEET 1 OF 9).

## PHASE II

USING OFF-SITE DETOUR, UNCOVER DETOUR SIGNS, CLOSE -L- (SR 1507 / SLATESTONE RD) TO TRAFFIC AND CONSTRUCT BRIDGE, APPROACHES AND ROADWAY INCLUDING DRIVEWAYS 1 AND 2 UP TO AND INCLUDING THE FINAL LAYER OF SURFACE COURSE.

## PHASE III

UPON COMPLETION OF BRIDGE, APPROACHES AND ROADWAY, PLACE FINAL PAVEMENT MARKINGS AND MARKERS IN ACCORDANCE WITH RSD 1205.01, 1205.02, 1205.12, 1250.01 AND 1251.01. REMOVE BARRICADES AND DETOUR SIGNS AND OPEN -L- (SR 1507 / SLATESTONE RD.) TO TRAFFIC.

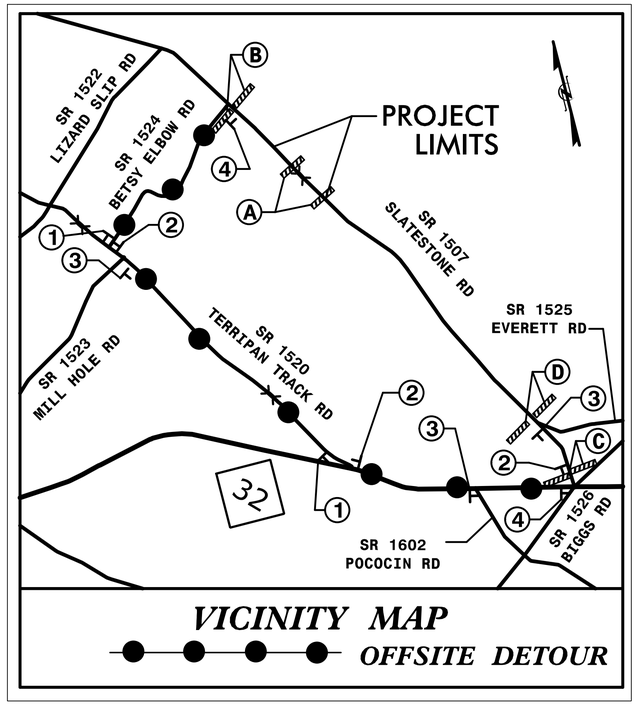


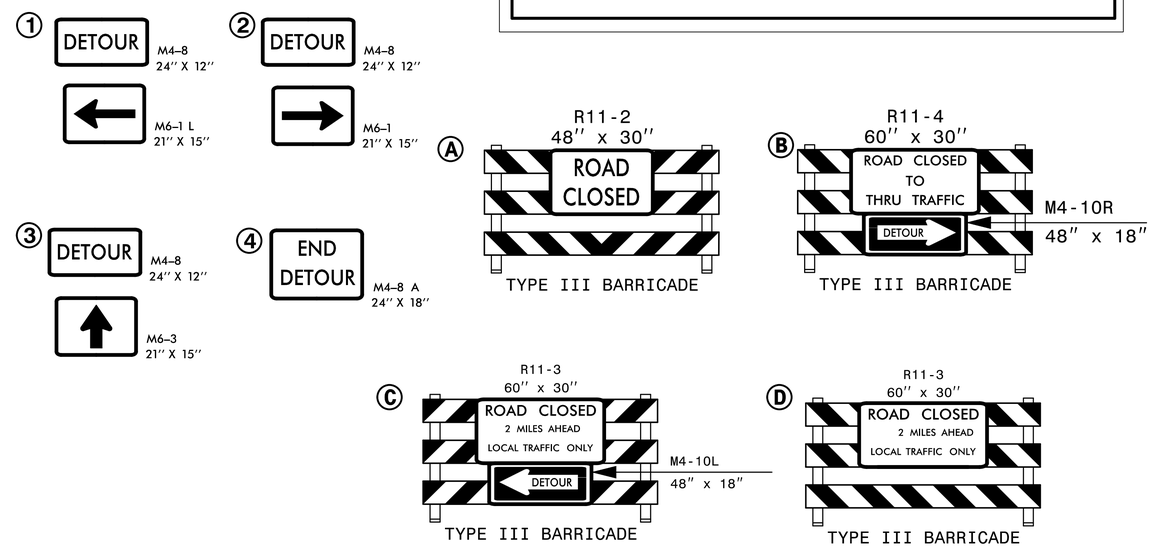


APPROVED: DocuSigned by: Rhonda B. Early F34CAF5AC6BF48A...

DATE: 1/25/2017

SEAL

NORTH CAROLINA PROFESSIONAL SEAL 023521 ENGINEER RHONDA B. EARLY

DOCUMENT NOT CONSIDERED FINAL UNLESS ALL SIGNATURES COMPLETED

DIVISION OF HIGHWAYS STATE OF NORTH CAROLINA DEPARTMENT OF TRANSPORTATION WORK ZONE TRAFFIC CONTROL

TRANSPORTATION MANAGEMENT PLAN

PHASING, PROJECT NOTES, AND DETOUR SIGNING

9:56:00 AM
-:\BRIO_tc_TCP_detour.dgn
HNTB

09/08/99

TIP PROJECT: 17BP.2.R.67

See Sheet 1-A For Index of Sheets
See Sheet 1-B for Conventional Plan Sheet Symbols
See Sheet 1C-1 for Survey Control Sheet

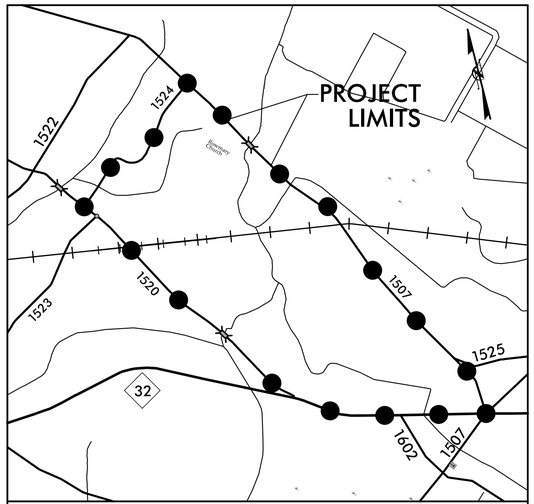


VICINITY MAP
OFFSITE DETOUR

| STATE | STATE PROJECT REFERENCE NO. | SHEET NO. | TOTAL SHEETS |
|---|---|---|---|
| N.C. | 17.BP.2.R.67 | EC-1 | 7 |

| STATE PROJ. NO. | F. A. PROJ. NO. | DESCRIPTION |
|---|---|---|
| 17BP.2.R.67 | | P.E. |

# STATE OF NORTH CAROLINA
# DIVISION OF HIGHWAYS

## PLAN FOR PROPOSED
# HIGHWAY EROSION CONTROL

***LOCATION: REPLACE BRIDGE NO. 110 OVER BEAVERDAM SWAMP ON SR 1507 (SLATESTONE ROAD)***

***TYPE OF WORK: GRADING, DRAINAGE, PAVING AND STRUCTURE***

4

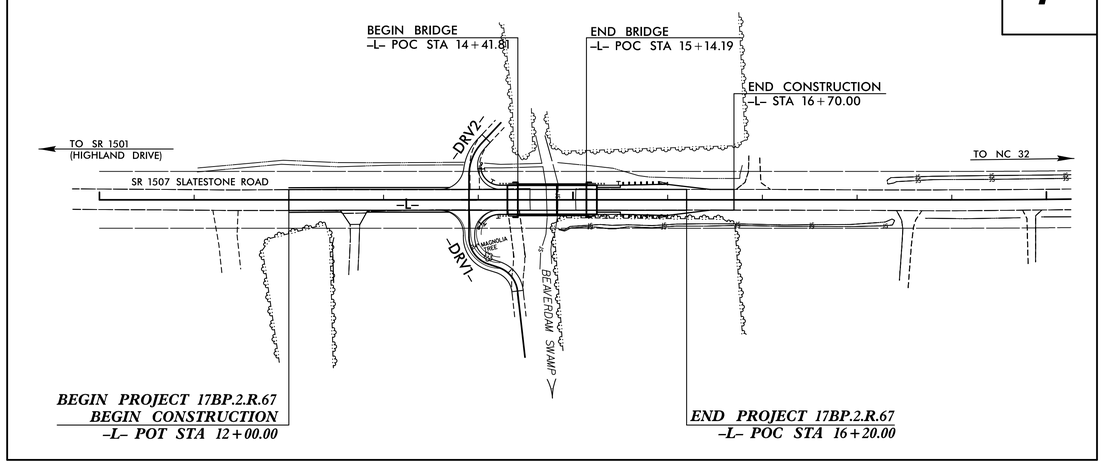


NAD 83/2011

## EROSION AND SEDIMENT CONTROL MEASURES

| Std. # | Description | Symbol |
|---|---|---|
| 1630.03 | Temporary Silt Ditch | TSD |
| 1630.05 | Temporary Diversion | TD |
| 1605.01 | Temporary Silt Fence | |
| 1606.01 | Special Sediment Control Fence | |
| 1622.01 | Temporary Berms and Slope Drains | |
| | Silt Basin Type B | |
| 1633.01 | Temporary Rock Silt Check Type-A | |
| | Temporary Rock Silt Check Type-A with Matting and Polyacrylamide (PAM) | |
| | Temporary Rock Silt Check Type-B | |
| | Wattle / Coir Fiber Wattle | |
| | Wattle / Coir Fiber Wattle with Polyacrylamide (PAM) | |
| 1634.01 | Temporary Rock Sediment Dam Type-A | |
| 1634.02 | Temporary Rock Sediment Dam Type-B | |
| 1635.01 | Rock Pipe Inlet Sediment Trap Type-A | |
| 1635.02 | Rock Pipe Inlet Sediment Trap Type-B | |
| 1630.04 | Stilling Basin | |
| 1630.06 | Special Stilling Basin | |
| | Rock Inlet Sediment Trap: | |
| 1632.01 | Type A | A |
| 1632.02 | Type B | B |
| 1632.03 | Type C | C |
| | Skimmer Basin | |
| | Tiered Skimmer Basin | |
| | Infiltration Basin | |

**THIS PROJECT HAS BEEN DESIGNED TO SENSITIVE WATERSHED STANDARDS.**

**ENVIRONMENTALLY SENSITIVE AREA(S) EXIST ON THIS PROJECT**

***Refer To E. C. Special Provisions for Special Considerations.***

NOTES:

1. CLEARING ON THIS PROJECT SHALL BE PERFORMED TO THE LIMITS ESTABLISHED BY METHOD II.
2. THIS PROJECT IS NOT WITHIN ANY MUNICIPAL BOUNDARIES.

CONTRACT:

***GRAPHIC SCALES***

50 25 0 50 100
PLANS

50 25 0 50 100
PROFILE (HORIZONTAL)

10 5 0 10 20
PROFILE (VERTICAL)

***ROADSIDE ENVIRONMENTAL UNIT***
***DIVISION OF HIGHWAYS***
***STATE OF NORTH CAROLINA***

***THESE EROSION AND SEDIMENT CONTROL PLANS COMPLY WITH THE REGULATIONS SET FORTH BY THE NCG-010000 GENERAL CONSTRUCTION PERMIT EFFECTIVE AUGUST 1, 2016 ISSUED BY THE NORTH CAROLINA DEPARTMENT OF ENVIRONMENT AND NATURAL RESOURCES DIVISION OF WATER QUALITY.***

*Prepared In the Office of:*

HNTB
HNTB NORTH CAROLINA, P.C.
343 E. Six Forks Road, Suite 200
Raleigh, North Carolina 27609
NC License No: C-1554

***2012 STANDARD SPECIFICATIONS***

JOHN F. WATSON, P.E.
EROSION CONTROL
LEVEL III
CERTIFICATION #3419

Roadway Standard Drawings

The following roadway english standards as appear in "Roadway Standard Drawings"– Roadway Design Unit – N. C. Department of Transportation – Raleigh, N. C., dated January 2012 and the latest revison thereto are applicable to this project and by reference hereby are considered a part of these plans.

| | | | |
|---|---|---|---|
| 1604.01 | Railroad Erosion Control Detail | 1632.01 | Rock Inlet Sediment Trap Type A |
| 1605.01 | Temporary Silt Fence | 1632.02 | Rock Inlet Sediment Trap Type B |
| 1606.01 | Special Sediment Control Fence | 1632.03 | Rock Inlet Sediment Trap Type C |
| 1607.01 | Gravel Construction Entrance | 1633.01 | Temporary Rock Silt Check Type A |
| 1622.01 | Temporary Berms and Slope Drains | 1633.02 | Temporary Rock Silt Check Type B |
| 1630.01 | Riser Basin | 1634.01 | Temporary Rock Sediment Dam Type A |
| 1630.02 | Silt Basin Type B | 1634.02 | Temporary Rock Sediment Dam Type B |
| 1630.03 | Temporary Silt Ditch | 1635.01 | Rock Pipe Inlet Sediment Trap Type A |
| 1630.04 | Stilling Basin | 1635.02 | Rock Pipe Inlet Sediment Trap Type B |
| 1630.05 | Temporary Diversion | 1640.01 | Coir Fiber Baffle |
| 1630.06 | Special Stilling Basin | 1645.01 | Temporary Stream Crossing |
| 1631.01 | Matting Installation | | |

8:46:59 AM
...\dgns\060110_EC_TSH.dgn
HNTB

| PROJECT REFERENCE NO. | SHEET NO. |
| --- | --- |
| 17BP.2.R.67 | EC-2 |

# SILT FENCE COIR FIBER WATTLE BREAK DETAIL

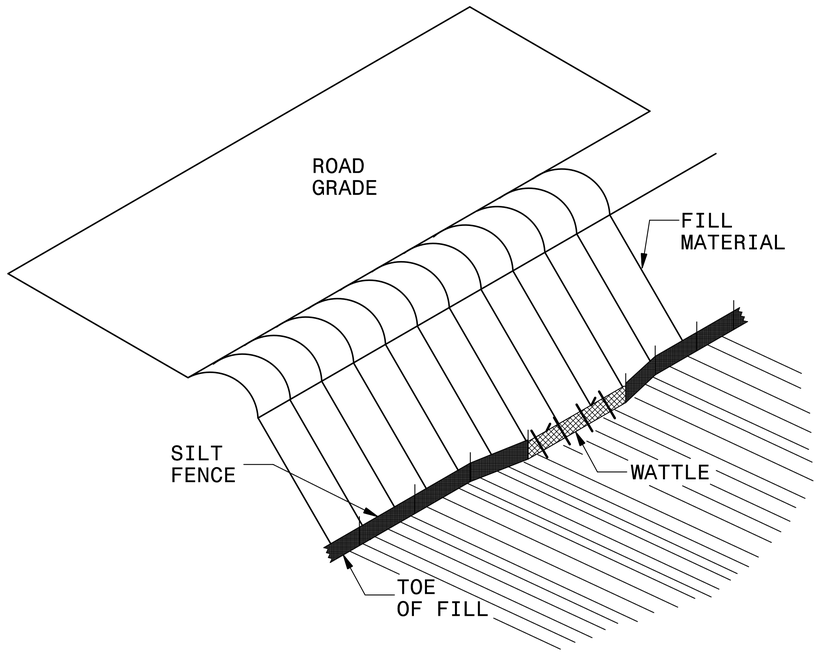


**ISOMETRIC VIEW**

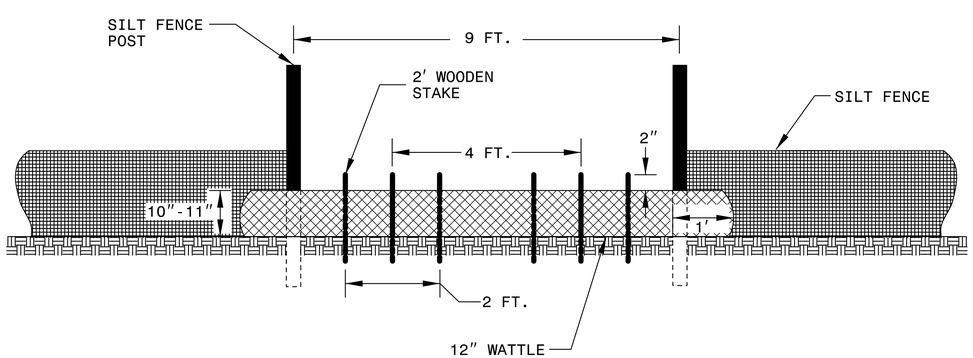


**VIEW FROM SLOPE**

NOTES:

USE MINIMUM 12 IN. DIAMETER COIR FIBER (COCONUT FIBER) WATTLE AND LENGTH OF 10 FT.

EXCAVATE A 1 TO 2 INCH TRENCH FOR WATTLE TO BE PLACED.

DO NOT PLACE WATTLE ON TOE OF SLOPE.

USE 2 FT. WOODEN STAKES WITH A 2 IN. BY 2 IN. NOMINAL CROSS SECTION.

INSTALL A MINIMUM OF 2 UPSLOPE STAKES AND 4 DOWNSLOPE STAKES AT AN ANGLE TO WEDGE WATTLE TO GROUND.

PROVIDE STAPLES MADE OF 0.125 IN. DIAMETER STEEL WIRE FORMED INTO A U SHAPE NOT LESS THAN 12" IN LENGTH.

INSTALL STAPLES APPROXIMATELY EVERY 1 LINEAR FOOT ON BOTH SIDES OF WATTLE AND AT EACH END TO SECURE IT TO THE SOIL.

WATTLE INSTALLATION CAN BE ON OUTSIDE OF THE SILT FENCE AS DIRECTED.

INSTALL TEMPORARY SILT FENCE IN ACCORDANCE WITH SECTION 1605 OF THE STANDARD SPECIFICATIONS.

INSET A

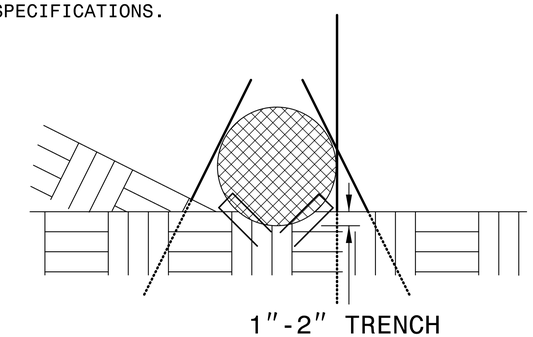


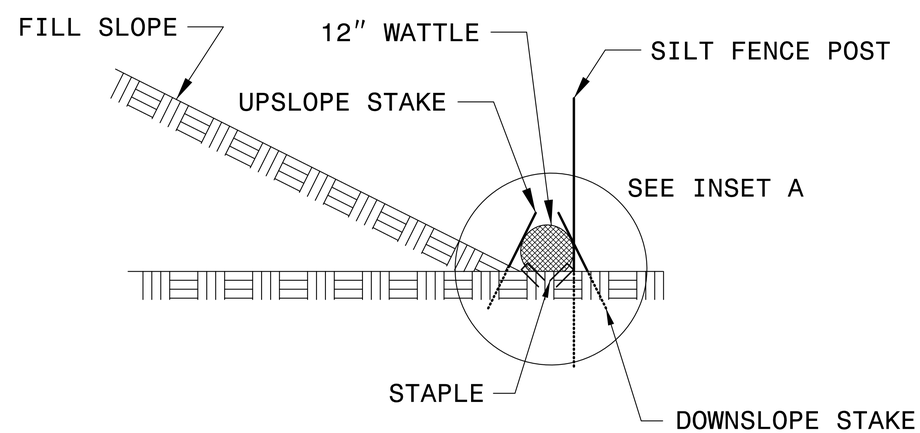


**SIDE VIEW**

| PROJECT REFERENCE NO. | SHEET NO. |
| --- | --- |
| 17BP.2.R.67 | EC-2A |

# COIR FIBER WATTLE BARRIER DETAIL

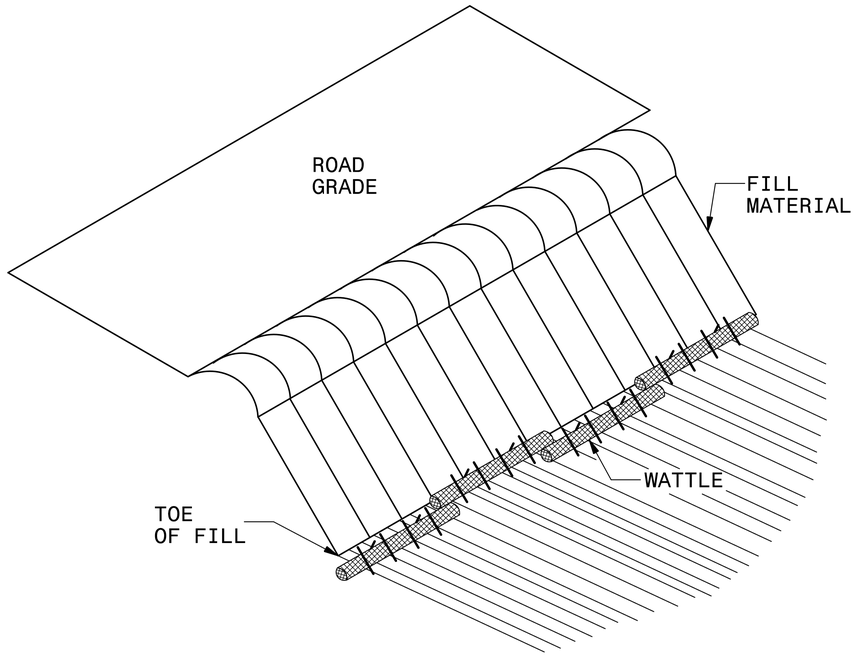


**ISOMETRIC VIEW**

NOTES:

USE MINIMUM 18 IN. NOMINAL DIAMETER COIR FIBER (COCONUT) WATTLE AND LENGTH OF 10 FT.

EXCAVATE A 2 TO 3 INCH TRENCH FOR WATTLE TO BE PLACED.

DO NOT PLACE WATTLES ON TOE OF SLOPE.

USE 2 FT. WOODEN STAKES WITH A 2 IN. BY 2 IN. NOMINAL CROSS SECTION.

INSTALL A MINIMUM OF 2 UPSLOPE STAKES AND 4 DOWNSLOPE STAKES AT AN ANGLE TO WEDGE WATTLE TO GROUND.

PROVIDE STAPLES MADE OF 0.125 IN. DIAMETER STEEL WIRE FORMED INTO A U SHAPE NOT LESS THAN 12″ IN LENGTH.

INSTALL STAPLES APPROXIMATELY EVERY 1 LINEAR FOOT ON BOTH SIDES OF WATTLE AND AT EACH END TO SECURE IT TO THE SOIL.

FOR BREAKS ALONG LARGE SLOPES, USE MAXIMUM SPACING OF 25 FT.

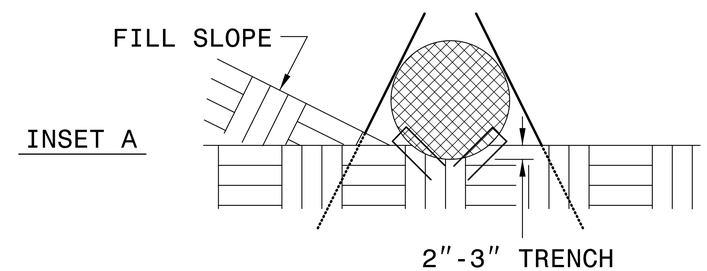


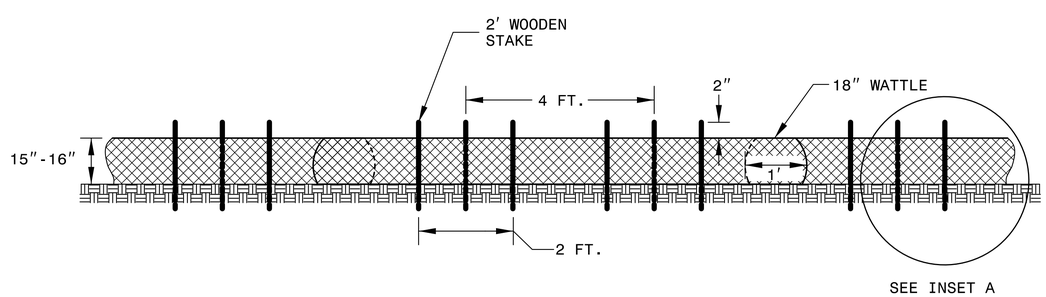


**FRONT VIEW**

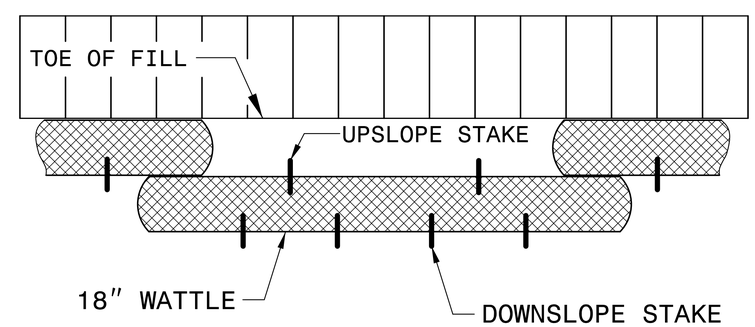


**TOP VIEW**

| PROJECT REFERENCE NO. | SHEET NO. |
|---|---|
| 17BP.2.R.67 | EC-2B |

# COIR FIBER WATTLE WITH POLYACRYLAMIDE (PAM) DETAIL

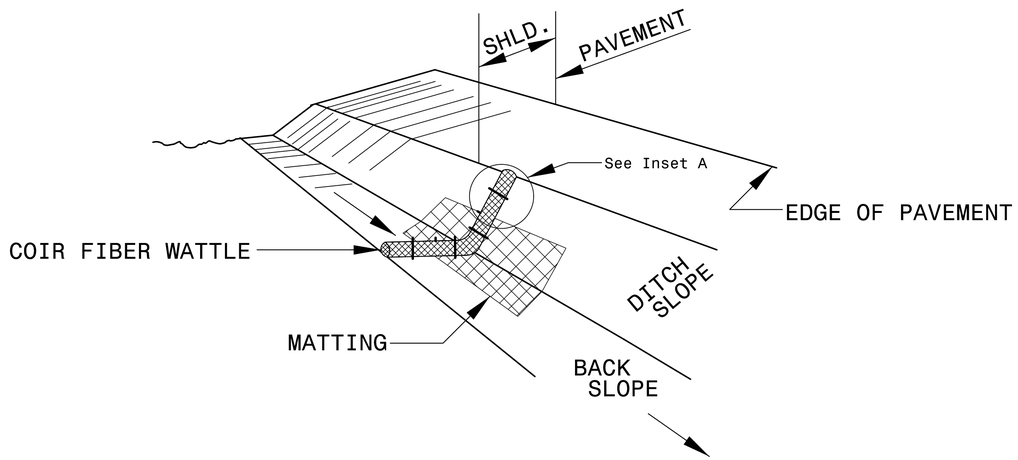


**ISOMETRIC VIEW**

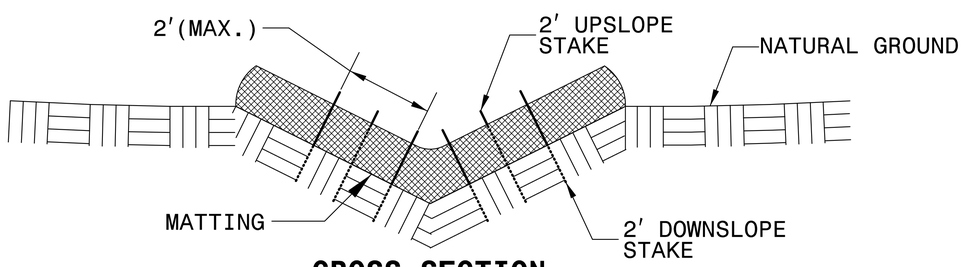


**CROSS SECTION VEE DITCH**

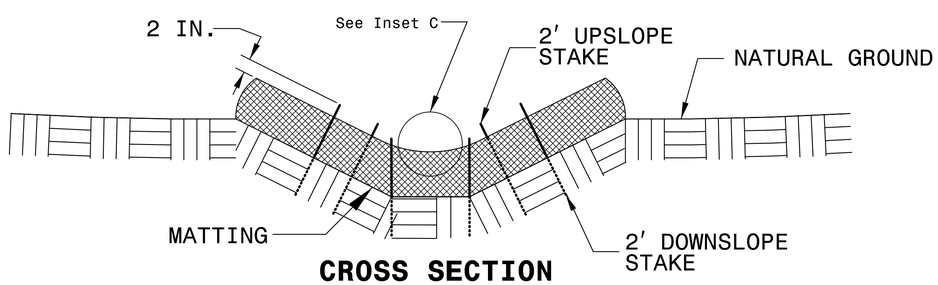


**CROSS SECTION TRAPEZOIDAL DITCH**

NOTES:

USE MINIMUM 12 IN. DIAMETER COIR FIBER (COCONUT FIBER) WATTLE.

USE 2 FT. WOODEN STAKES WITH A 2 IN. BY 2 IN. NOMINAL CROSS SECTION.

ONLY INSTALL WATTLE(S) TO A HEIGHT IN DITCH SO FLOW WILL NOT WASH AROUND WATTLE AND SCOUR DITCH SLOPES AND AS DIRECTED.

INSTALL A MINIMUM OF 2 UPSLOPE STAKES AND 4 DOWNSLOPE STAKES AT AN ANGLE TO WEDGE WATTLE TO BOTTOM OF DITCH.

PROVIDE STAPLES MADE OF 0.125 IN. DIAMETER STEEL WIRE FORMED INTO A U SHAPE NOT LESS THAN 12" IN LENGTH.

INSTALL STAPLES APPROXIMATELY EVERY 1 LINEAR FOOT ON BOTH SIDES OF WATTLE AND AT EACH END TO SECURE IT TO THE SOIL.

INSTALL MATTING IN ACCORDANCE WITH SECTION 1631 OF THE STANDARD SPECIFICATIONS.

PRIOR TO POLYACRYLAMIDE (PAM) APPLICATION, OBTAIN A SOIL SAMPLE FROM PROJECT LOCATION, AND FROM OFFSITE MATERIAL, AND ANALYZE FOR APPROPRIATE PAM FLOCCULANT TO BE APPLIED TO EACH WATTLE.

INITIALLY APPLY 2 OUNCES OF ANIONIC OR NEUTRALLY CHARGED PAM OVER WATTLE WHERE WATER WILL FLOW AND 1 OUNCE OF PAM ON MATTING ON EACH SIDE OF WATTLE. REAPPLY PAM AFTER EVERY RAINFALL EVENT THAT IS EQUAL TO OR EXCEEDS 0.50 IN.

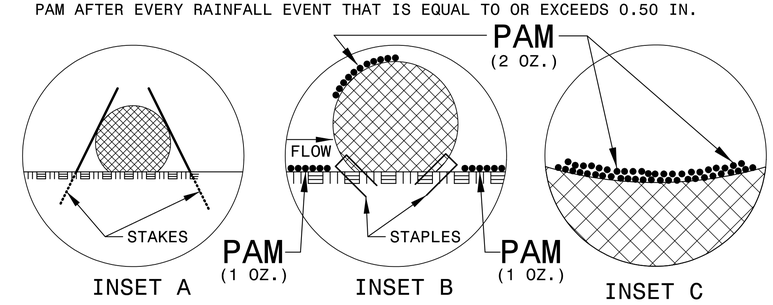


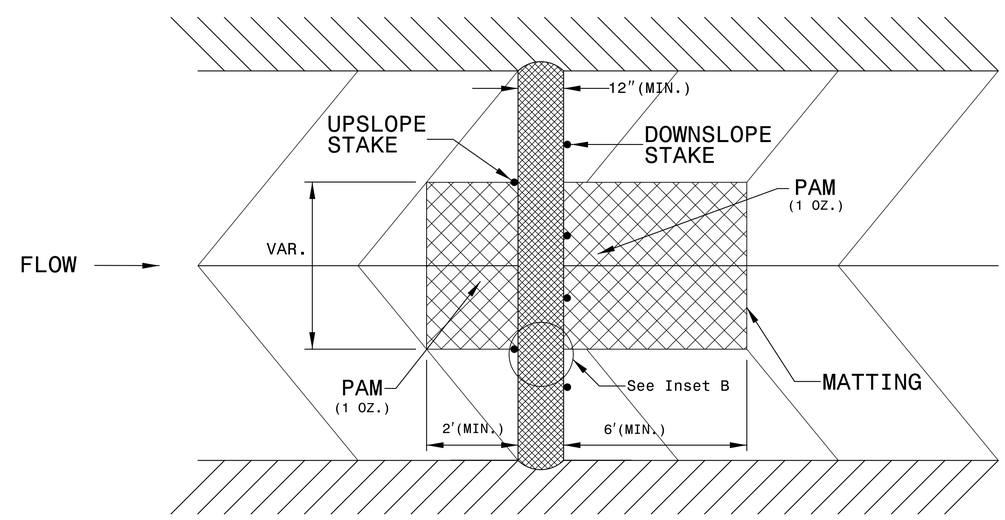


**TOP VIEW**

| PROJECT REFERENCE NO. | SHEET NO. |
| --- | --- |
| 17BP.2.R.67 | EC-2C |

# TEMPORARY ROCK SILT CHECK TYPE 'A' WITH EXCELSIOR MATTING AND POLYACRYLAMIDE (PAM)

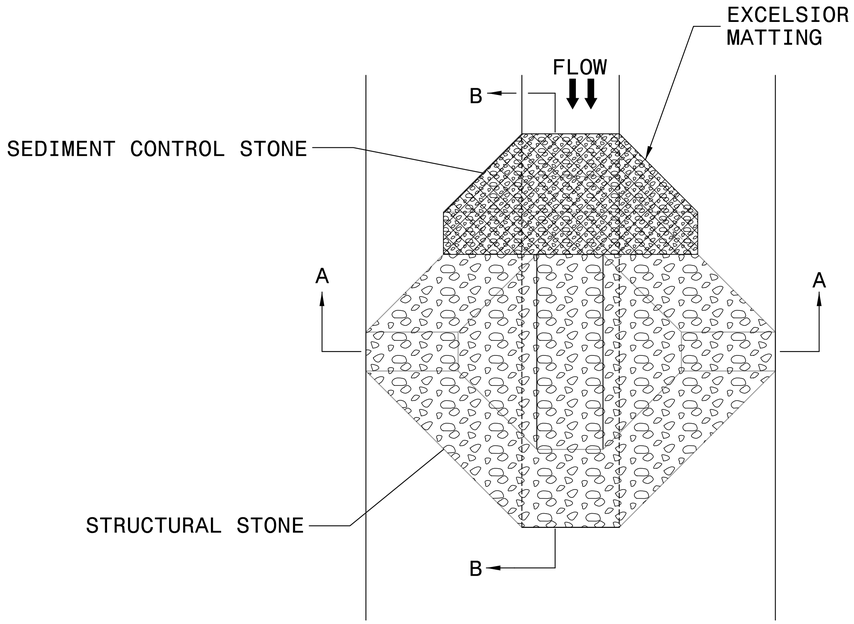


PLAN

NOTES:

INSTALL TEMPORARY ROCK SILT CHECK TYPE A IN ACCORDANCE WITH ROADWAY STANDARD DRAWING NO. 1633.01.

USE EXCELSIOR FOR MATTING MATERIAL AND ANCHOR MATTING SECTION AT TOP AND BOTTOM WITH CLASS B STONE.

PRIOR TO POLYACRYLAMIDE (PAM) APPLICATION, OBTAIN A SOIL SAMPLE FROM PROJECT LOCATION, AND FROM OFFSITE MATERIAL, AND ANALYZE FOR APPROPRIATE PAM FLOCCULANT TO BE APPLIED TO EACH ROCK SILT CHECK.

INITIALLY APPLY 4 OUNCES OF POLYACRYLAMIDE (PAM) TO TOP OF MATTING SECTION AND AFTER EVERY RAINFALL EVENT THAT EQUALS OR EXCEEDS 0.50 INCHES.

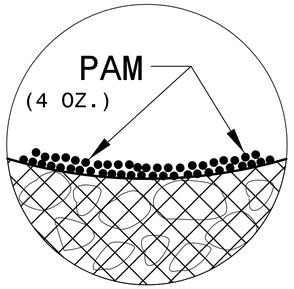


INSET A

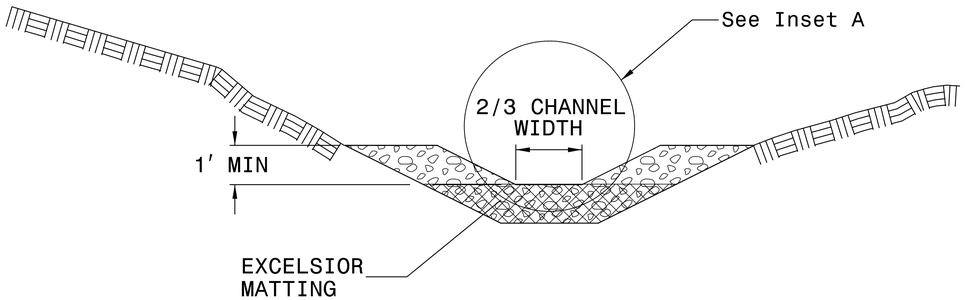


SECTION A-A

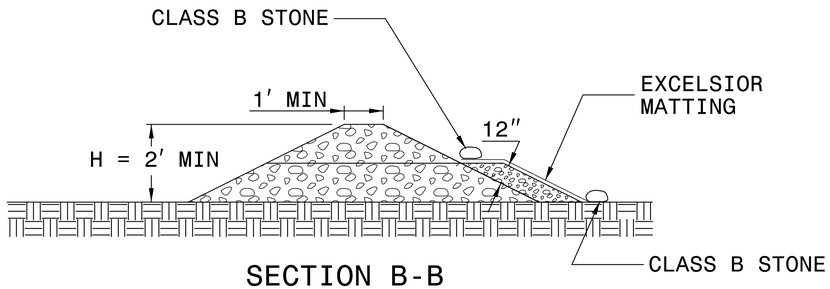


SECTION B-B

| PROJECT REFERENCE NO. | SHEET NO. |
|---|---|
| 17BP.2.R.67 | EC-3 |

DIVISION OF HIGHWAYS
STATE OF NORTH CAROLINA

# SOIL STABILIZATION TIMEFRAMES

| SITE DESCRIPTION | STABILIZATION TIME | TIMEFRAME EXCEPTIONS |
|---|---|---|
| PERIMETER DIKES, SWALES, DITCHES AND SLOPES | 7 DAYS | NONE |
| HIGH QUALITY WATER (HQW) ZONES | 7 DAYS | NONE |
| SLOPES STEEPER THAN 3:1 | 7 DAYS | IF SLOPES ARE 10' OR LESS IN LENGTH AND ARE NOT STEEPER THAN 2:1, 14 DAYS ARE ALLOWED. |
| SLOPES 3:1 OR FLATTER | 14 DAYS | 7 DAYS FOR SLOPES GREATER THAN 50' IN LENGTH. |
| ALL OTHER AREAS WITH SLOPES FLATTER THAN 4:1 | 14 DAYS | NONE, EXCEPT FOR PERIMETERS AND HQW ZONES. |

## MATTING FOR EROSION CONTROL

| SHEET NO. | LINE | FROM STATION | TO STATION | SIDE | ESTIMATE (SY) | REMARKS |
|---|---|---|---|---|---|---|
| EC-4 | -L- | 12+80 | 14+64 | RT | 125 | INSTALL IN PROP. DITCH |
| EC-4 | -L- | 14+80 | 16+25 | RT | 150 | INSTALL IN PROP. DITCH |
| | | | | | | |
| | | | | | | |
| | | | | | | |
| | | | | | | |
| | | | | SUBTOTAL | 275 | |
| | | | | MISCELLANEOUS MATTING | 1260 | |
| | | | | TOTAL | 1535 | |
| | | | | SAY | 1550 | |

HNTB NORTH CAROLINA, P.C.
343 E. Six Forks Road, Suite 200
Raleigh, North Carolina 27609
NC License No: C-1554

| PROJECT REFERENCE NO. | SHEET NO. |
|---|---|
| 17BP.2.R.67 | EC-4 |

JOHN F. WATSON, P.E.
EROSION CONTROL
LEVEL III
CERTIFICATION #3419

8/17/99

REVISIONS

ENVIRONMENTALLY SENSITIVE AREA
SEE PROJECT SPECIAL PROVISIONS

BEGIN PROJECT 17BP.2.R.67
BEGIN CONSTRUCTION
-L- POT STA 12+00.00

NAD 83/2011 NA

-DRV2-
PI Sta 10+45.67
△ = 43° 16' 51.2" (RT)
D = 114° 35' 29.6"
L = 37.77'
T = 19.84'
R = 50.00'

N 57° 35' 10.4" E

END CONSTRUCTION
-DRV2-
STA 10+70.00

END PROJECT 17BP.2.R.67
-L- POC STA 16+20.00

-L-
PI Sta 19+68.27
△ = 0° 41' 31.2" (LT)
D = 0° 30' 00.0"
L = 138.40'
T = 69.20'
R = 11,459.16'

+80.00 -L-
60.00' LT

END CONSTRUCTION
-L- STA 16+70.00

(GPS MON)
60110-2

S 76° 23' 12.0" E

S 75° 41' 40.8" E

S 14° 18' 19.2" W

S 58° 05' 12.9" E

S 7° 49' 34.5" W

END CONSTRUCTION
-DRV1-
STA 11+21.90

OTIS M & DEBORAH C ALLIGOOD
DB 1435 PG 267

JASPER W FLEMING HEIRS
DB 891 PG 264

JASPER W FLEMING HEIRS
N/A

ROSEMARY CHURCH OF CHRIST
DB 621 PG 146

LINDON LEWIS ALLIGOOD
WB 99E PG 414

FREDERICK E WILSON
DB 642 PG 531

ANTHONY E BOWEN
DB 1882 PG 288

(GPS MON)
60110-1

TO SR 1501 (HIGHLAND DR)

SR 1507 SLATESTONE RD 21.7' BST

BEGIN / END SAFETY FENCE
-L- STA 12+00 (LT)

BEGIN / END SAFETY FENCE
-L- STA 15+11 (LT)

BEGIN / END SAFETY FENCE
-L- STA 14+87 (RT)

BEGIN / END SAFETY FENCE
-L- STA 12+00 (RT)

50' TAPER TO EXISTING

CLASS 'I' RIP-RAP
EST. 20 TONS
EST. 39 SYGF

CLASS 'I' RIP-RAP
EST. 7 TONS
EST. 15 SYGF

15" RCP-III

SPECIAL LAT. 'V' DITCH
SEE DETAIL 1

WATTLE BARRIER

TURBIDITY CURTAIN (TYP.)

SPECIAL 3' LAT. BASE DITCH
SEE DETAIL 3

RIP-RAP AT EMBANKMENT
SEE DETAIL 2
EST. 10 TONS
EST 25 SYGF

RIP-RAP AT EMBANKMENT
SEE DETAIL 2
EST. 7 TONS
EST 13 SYGF

SPECIAL LAT. 'V' DITCH
SEE DETAIL 1

CLASS 'I' RIP-RAP
EST. 7 TONS
EST. 15 SYGF

ISBD FINISH FLOOR ELEV=37.02' LOW GROUND ELEV=34.44'

ISBD FINISH FLOOR ELEV=36.18' LOW GROUND ELEV=35.18'

DETAIL 1
SPECIAL LATERAL 'V' DITCH
(Not to Scale)
Natural Ground, 3:1, D, 3:1, Fill Slope
Min. D = 1.0 Ft.
FROM -L- STA. 12+80 TO STA. 14+64 RT.
FROM -L- STA. 15+15 TO STA. 16+50 LT.

DETAIL 2
RIP RAP AT EMBANKMENT
(Not to Scale)
10' min., 1.0' min., Ditch Grade, 1.5', GEOTEXTILE
Type of Liner = 10 TONS, CL 'I' Rip-Rap
Geotextile = 25 sy
FROM -L- STA. 14+50 TO STA. 14+70 RT.
FROM -L- STA. 14+77 TO STA. 14+91 RT.

DETAIL 3
SPECIAL LATERAL BASE DITCH
(Not to Scale)
Natural Ground, 3:1, D, B, 3:1 or Flatter, Fill Slope
Min. D = 1.0 Ft.
B = 3.0 Ft.
FROM -L- STA. 14+80 TO STA. 16+25 RT.

-DRV1-
PI Sta 10+61.43
△ = 72° 23' 32.1" (LT)
D = 190° 59' 09.4"
L = 37.90'
T = 21.95'
R = 30.00'

PI Sta 11+06.83
△ = 65° 54' 47.8" (RT)
D = 190° 59' 09.4"
L = 34.51'
T = 19.45'
R = 30.00'

NOTE: THE CONTRACTOR SHALL INSTALL SPECIAL SEDIMENT CONTROL FENCE OR WATTLES IN LOW AREAS OF SILT FENCE AND UNDER THE BRIDGE, AS NEEDED OR DIRECTED BY THE ENGINEER.

NOTE: ALL DRIVEWAY RADII ARE 25' UNLESS OTHERWISE NOTED ON PLANS

SKETCH OF BRIDGE
IN RELATIONSHIP TO PAVEMENT
NTS

BEGIN BRIDGE
-L- POT STA 15+14.19
BEGIN APPROACH SLAB
-L- POT STA 15+25.19
END SBG
-L- STA 15+50.00 LT/RT
BEGIN SBG
-L- STA 15+25.19 LT/RT
BEGIN BRIDGE
-L- POT STA 14+41.81
BEGIN APPROACH SLAB
-L- POT STA 14+30.81
TYPE III, 15.42, 025, 11', GRAU 350, AT-1, -DRV2-, -DRV1-, -L-, S 75° 41' 40.8" E, 24" MAGNOLIA TREE

MATERIAL TO BE REMOVED

LEFT DITCH
RIGHT DITCH

## -L-

PI = 13+90.00
EL = 38.67'
VC = 150'
K = 165
V = 60 MPH

BEGIN GRADE
-L- STA 12+00.00
ELEV. = 37.51

END GRADE/BEGIN MILLING & OVERLAY
-L- STA 16+20.00
ELEV. = 37.98

END SPECIAL LAT. "V" DITCH (LT)
PI = 16+50.00
EI = 34.79

END MILLING & OVERLAY
-L- STA 16+70.00

BEGIN SPECIAL LAT. "V" DITCH (LT)
PI = 15+15.00
EI = 31.94

WS EL: = 27.8'
SURVEY 03-15-16

(+)0.6105%
(-)0.3000%
(-) 1.5088%
(-) 0.5000%
(+) 2.1146%
(+) 0.0000%
(+) 2.8074%

BEGIN SPECIAL LAT. "V" DITCH (RT)
PI = 12+80.00
EI = 33.89

PI = 13+73.00
ELEV = 32.35

BEGIN BRIDGE
-L- STA 14+41.81

END BRIDGE
-L- STA 15+14.19

END SPECIAL LAT. "V" DITCH (RT)
PI = 14+64.00
EI = 31.89

BEGIN SPECIAL LAT. BASE DITCH (RT)
PI = 14+80.00
EI = 27.20

PI = 15+00.00
ELEV = 27.20

END SPECIAL LAT. BASE DITCH (RT)
PI = 16+35.00
EI = 30.99

BRIDGE HYDRAULIC DATA

| | | |
|---|---|---|
| DESIGN DISCHARGE | = 721 | CFS |
| DESIGN FREQUENCY | = 25 | YRS |
| DESIGN HW ELEVATION | = 35.6 | FT |
| BASE DISCHARGE | = 1127 | CFS |
| BASE FREQUENCY | = 100 | YRS |
| BASE HW ELEVATION | = 36.27 | FT |
| OVERTOPPING DISCHARGE | = N/A | CFS |
| OVERTOPPING FREQUENCY | = > 500 (+) | YRS |
| OVERTOPPING ELEVATION | = 37.39 | FT |
| DATE OF SURVEY | = 03-15-2016 | |
| W.S. ELEVATION AT DATE OF SURVEY | = 27.80 | FT |

## -DRV2-

BEGIN GRADE
-DRV2- STA 10+13.00
ELEV. = 38.17

PI = 10+25.00
EL = 37.45
VC = 20'
K = 3

(-)8.0000%
(-)12.5000%
(-)1.0000%

PI = 10+55.00
EL = 33.70
VC = 30'
K = 3

END GRADE
-DRV2- STA 10+70.00
ELEV. = 33.55

## -DRV1-

END GRADE
-DRV1- STA 11+36.00
ELEV. = 36.14

(-)1.5972%

BEGIN GRADE
-DRV1- STA 10+20.41
ELEV. = 37.99

50 40 30 20 10 0

10+00 11+00 12+00 13+00 14+00 15+00 16+00 17+00 18+00 19+00

10:48:56 AM
C:\Users\...\060110_hyd_EC_psh.dgn
HNTB

09/08/99

TIP PROJECT: 17BP.2.R.67

| T.I.P. NO. | SHEET NO. |
|---|---|
| 17BP.2.R.67 | UC–1 |

STATE OF NORTH CAROLINA
DIVISION OF HIGHWAYS

# UTILITY CONSTRUCTION PLANS
# BEAUFORT COUNTY

**LOCATION: BRIDGE 110 OVER BEAVERDAM SWAMP ON SR 1507 (SLATESTONE ROAD)**

**TYPE OF WORK: WATER LINE RELOCATION**

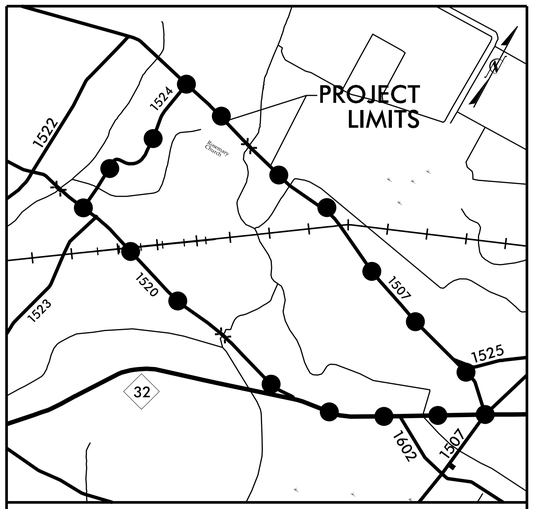


VICINITY MAP
OFFSITE DETOUR

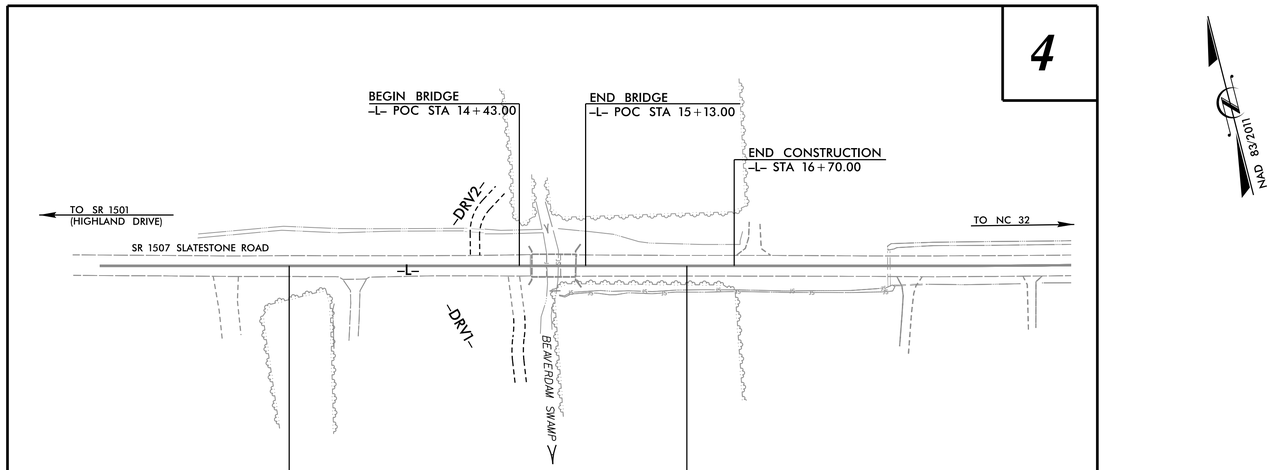





NOTE:

1. THIS PROJECT IS NOT WITHIN ANY MUNICIPAL BOUNDARIES.

DOCUMENT NOT CONSIDERED FINAL UNTIL ALL SIGNATURES ARE COMPLETED

**GRAPHIC SCALES**

50 25 0 50 100
PLANS

50 25 0 50 100
PROFILE (HORIZONTAL)

10 5 0 10 20
PROFILE (VERTICAL)

**INDEX OF SHEETS**



**WATER AND SEWER OWNERS ON PROJECT**

(A) WATER – BEAUFORT COUNTY WATER DEPT


PREPARED IN THE OFFICE OF

M A Engineering Consultants, Inc.
598 East Chatham Street - Suite 137
Cary, NC 27511
Phone: 919.297.0220 Fax: 919.297.0221
NC License: F-0160

FOR

HNTB
HNTB NORTH CAROLINA, P.C.
343 E. Six Forks Road, Suite 200
Raleigh, North Carolina 27609
Nc License No: C-1554

| | |
|---|---|
| KEVIN ZDEB, PE | CONSULTANT CONTACT #1 |
| WEBB WHITE | CONSULTANT CONTACT #2 |
| GARY BLUE | CONSULTANT CONTACT #3 |


SEAL

NORTH CAROLINA PROFESSIONAL SEAL 27611 ENGINEER KEVIN C. ZDEB

Docusigned by: Kevin C. Zdeb

1/11/2017


DIVISION OF HIGHWAYS
HIGHWAY DIVISION 2
105 PACTOLUS HWY. (NC 33)
PO BOX 1587
GREENVILLE NC 27835
PHONE (252) 439-2800
FAX (252) 830-3352

| | |
|---|---|
| HON F. YEUNG, PE | DIVISION PROJECT ENGINEER |
| – | – |
| DWAYNE SMITH | UTILITIES DIV 2 COORDINATOR |
| – | – |


$$$$$$$$SYSTIME$$$$$$$$DGN$$$$$$$$$$$$$$$$$$$$USERNAME$$$$$$$$

5/14/99

| PROJECT REFERENCE NO. | SHEET NO. |
|---|---|
| 17BP.2.R.67 | UC-2 |

STATE OF NORTH CAROLINA
DIVISION OF HIGHWAYS

# UTILITIES PLAN SHEET SYMBOLS

## PROPOSED WATER SYMBOLS

- Water Line (Sized as Shown) — 12" WL
- 11¼ Degree Bend
- 22½ Degree Bend
- 45 Degree Bend
- 90 Degree Bend
- Plug
- Tee
- Cross
- Reducer
- Gate Valve — GV
- Butterfly Valve — BV
- Tapping Valve — TGV
- Line Stop — LS
- Line Stop with Bypass — LS/BP
- Blow Off — BO
- Fire Hydrant — PFH
- Relocate Fire Hydrant — RFH
- Remove Fire Hydrant — REM FH
- Water Meter — PWM
- Relocate Water Meter — RWM
- Remove Water Meter — REM WM
- Water Pump Station — PS(W)
- RPZ Backflow Preventer — PRPZ
- DCV Backflow Preventer — PBFP
- Relocate RPZ Backflow Preventer — RRPZ
- Relocate DCV Backflow Preventer — RBFP

## PROPOSED SEWER SYMBOLS

- Gravity Sewer Line (Sized as Shown) — 12" SS
- Force Main Sewer Line (Sized as Shown) — 12" FSS
- Manhole (Sized per Note)
- Sewer Pump Station — PS(SS)

## PROPOSED MISCELLANOUS UTILITIES SYMBOLS

- Power Pole
- Telephone Pole
- Joint Use Pole
- Telephone Pedestal — TEL PED
- Utility Line by Others (Type as Shown) — PROP O/H POW LINES
- Trenchless Installation — 12" TL INSTALL
- Encasement by Open Cut — 24" ENCAS BY OC
- Encasement — 24" ENCASEMENT
- Thrust Block
- Air Release Valve — AR
- Utility Vault — UV
- Concrete Pier — CP
- Steel Pier — SP
- Plan Note — NOTE
- Pay Item Note — PAY ITEM

## EXISTING UTILITIES SYMBOLS

- Power Pole
- Telephone Pole
- Joint Use Pole
- Utility Pole
- Utility Pole with Base
- H-Frame Pole
- Power Transmission Line Tower
- Water Manhole
- Power Manhole
- Telephone Manhole
- Sanitary Sewer Manhole
- Hand Hole for Cable
- Power Transformer
- Telephone Pedestal
- CATV Pedestal
- Gas Valve
- Gas Meter
- Located Miscellaneous Utility Object
- Abandoned According to Utility Records — AATUR
- End of Information — E.O.I.
- *Underground Power Line — P
- *Underground Telephone Cable — T
- *Underground Telephone Conduit — TC
- *Underground Fiber Optics Telephone Cable — T FO
- *Underground TV Cable — TV
- *Underground Fiber Optics TV Cable — TV FO
- *Underground Gas Pipeline — G
- Aboveground Gas Pipeline — A/G Gas
- *Underground Water Line — W
- Aboveground Water Line — A/G Water
- *Underground Gravity Sanitary Sewer Line — SS
- Aboveground Gravity Sanitary Sewer Line — A/G Sanitary Sewer
- *Underground SS Forced Main Line — FSS
- Underground Unknown Utility Line — ?UTL
- SUE Test Hole
- Water Meter
- Water Valve
- Fire Hydrant
- Sanitary Sewer Cleanout

*For Existing Utilities

- Utility Line Drawn from Record (Type as Shown) — W
- Designated Utility Line (Type as Shown) — W

REV: 2/1/2012

| PROJECT REFERENCE NO. | SHEET NO. |
|---|---|
| 17BP.2.R.67 | UC-3 |

DESIGNED BY: GJB
DRAWN BY: GJB
CHECKED BY: KCZ
APPROVED BY: KCZ
REVISED:

NORTH CAROLINA DEPARTMENT OF TRANSPORTATION

UTILITIES ENGINEERING SEC.
PHONE:(919)707-6690
FAX:(919)250-4151

NORTH CAROLINA PROFESSIONAL SEAL 27611 ENGINEER KEVIN C. ZUEB
DocuSigned by:
Certified by:
1/11/2017

UTILITY CONSTRUCTION PLANS ONLY

UTILITY CONSTRUCTION

M A Engineering Consultants, Inc.
598 East Chatham Street • Suite 137
Cary, NC 27511
Phone: 919.297.0220 Fax: 919.297.0221
NC License: F-0160

*DOCUMENT NOT CONSIDERED FINAL UNTIL ALL SIGNATURES ARE COMPLETED*

# UTILITY CONSTRUCTION

## GENERAL NOTES:

1. THE PROPOSED UTILITY CONSTRUCTION SHALL MEET THE APPLICABLE REQUIREMENTS OF THE NC DEPARTMENT OF TRANSPORTATION'S "STANDARD SPECIFICATIONS FOR ROADS AND STRUCTURES" DATED JANUARY 2012.

2. THE EXISTING WATER LINE UTILITIES BELONG TO BEAUFORT COUNTY.

   CONTACT: ERICK JENNINGS
   PHONE: 252-975-0720

3. ALL WATER LINES TO BE INSTALLED WITHIN COMPLIANCE OF THE RULES AND REGULATIONS OF THE NORTH CAROLINA DEPARTMENT OF ENVIRONMENTAL AND NATURAL RESOURCES, DIVISION OF ENVIRONMENTAL HEALTH.

4. THE UTILITY OWNER OWNS THE EXISTING UTILITY FACILITIES AND WILL OWN THE NEW UTILITY FACILITIES AFTER ACCEPTANCE BY THE DEPARTMENT. THE DEPARTMENT OWNS THE CONSTRUCTION CONTRACT AND HAS ADMINISTRATIVE AUTHORITY. COMMUNICATIONS AND DECISIONS BETWEEN THE CONTRACTOR AND UTILITY OWNER ARE NOT BINDING UPON THE DEPARTMENT OR THIS CONTRACT UNLESS AUTHORIZED BY THE ENGINEER. AGREEMENTS BETWEEN THE UTILITY OWNER AND CONTRACTOR FOR THE WORK THAT IS NOT PART OF THIS CONTRACT OR IS SECONDARY TO THIS CONTRACT ARE ALLOWED, BUT ARE NOT BINDING UPON THE DEPARTMENT.

5. PROVIDE ACCESS FOR THE DEPARTMENT PERSONNEL AND THE OWNER'S REPRESENTATIVES TO ALL PHASES OF CONSTRUCTION. NOTIFY DEPARTMENT PERSONNEL AND THE UTILITY OWNER TWO WEEKS PRIOR TO COMMENCEMENT OF ANY WORK AND ONE WEEK PRIOR TO SERVICE INTERRUPTION. KEEP UTILITY OWNERS' REPRESENTATIVES INFORMED OF WORK PROGRESS AND PROVIDE OPPROTUNITY FOR INSPECTION OF CONSTRUCTION AND TESTING.

6. THE PLANS DEPICT THE BEST AVAILABLE INFORMATION FOR THE LOCATION, SIZE, AND TYPE OF MATERIAL FOR ALL EXISTING UTILITIES. MAKE INVESTIGATIONS FOR DETERMINING THE EXACT LOCATION, SIZE, AND TYPE MATERIAL OF THE EXISTING FACILITIES AS NECESSARY FOR THE CONSTRUCTION OF THE PROPOSED UTILITIES AND FOR AVOIDING DAMAGE TO EXISTING FACILITIES. REPAIR ANY DAMAGE INCURRED TO EXISTING FACILITIES TO THE ORIGINAL OR BETTER CONDITION AT NO ADDITONAL COST TO THE DEPARTMENT.

7. MAKE FINAL CONNECTIONS OF THE NEW WORK TO THE EXISTING SYSTEM WHERE INDICATED ON THE PLANS, AS REQUIRED TO FIT THE ACTUAL CONDITIONS, OR AS DIRECTED.

8. MAKE CONNECTIONS BETWEEN EXISTING AND PROPOSED UTILITIES AT TIMES MOST CONVENIENT TO THE PUBLIC, WITHOUT ENDANGERING THE UTILITY SERVICE, AND IN ACCORDANCE WITH THE UTILITY OWNER'S REQUIREMENTS. MAKE CONNECTIONS ON WEEKENDS, AT NIGHT, AND ON HOLIDAYS IF NECESSARY.

9. ALL UTILITY MATERIALS SHALL BE APPROVED PRIOR TO DELIVERY TO THE PROJECT. SEE 1500-7, " SUBMITTALS AND RECORDS" IN SECTION 1500 OF THE STANDARD SPECIFICATIONS.

10. CONTRACTOR SHALL NOT OPERATE ANY VALVES ON THE EXISTING UTILITY SYSTEMS. CONTRACTOR SHALL CONTACT THE UTILITY OWNER TO CONDUCT STRATEGIC OPERATION OF VALVES FOR SERVICE INTERRUPTION IN ORDER TO PERFORM SPECIFIC WORK.

## PROJECT SPECIFIC NOTES:

1. PROPOSED OPEN TRENCH WATER LINE SHALL BE 6" DUCTILE IRON PIPE, CLASS 350, WITH GRIP RINGS.

2. PROPOSED TRENCHLESS WATER LINE SHALL BE 200 PSI PRESSURE PIPE D.I.P.S. 8" HDPE SDR-9 WITH MATERIAL DESIGNATION PE 3408 / 3608 THAT CONFORMS TO NSF-61.

3. ALL WATER LINE FITTINGS, 4-INCHES THROUGH 12-INCHES IN DIAMETER, SHALL BE DUCTILE IRON.

4. CONTRACTOR'S ATTENTION IS DIRECTED TO SECTIONS 102, 107, AND 1550 OF THE STANDARD SPECIFICATIONS CONCERNING TRENCHLESS INSTALLATION. IT IS CONTRACTOR'S RESPONSIBILITY TO HAVE BORE DESIGNED AND SEALED BY A LICENSED NORTH CAROLINA PROFESSIONAL ENGINEER. NO DAMAGE IS ALLOWED TO RIVER, STREAM, CREEK, WETLANDS, OR BUFFER ZONES.

5. ALL PROPOSED FITTINGS (BENDS, TEES, CROSSES, REDUCERS, PLUGS, ETC.) SHALL BE ADEQUATELY RESTRAINED BY THE USE OF RESTRAINED JOINT CONSTRUCTION AND/OR CAST IN PLACE CONCRETE THRUST RESTRAINTS AS DETAILED ON THESE DRAWINGS, OR AS DIRECTED BY THE RESIDENT ENGINEER.

## PROJECT QUANTITIES

| | JOB NAME: 17BP.2.R.67 | DATE: 1/10/2017 | |
|---|---|---|---|
| ITEM NUMBER | DESCRIPTION | QUANTITY | |
| 5325600000-E | 6" WATER LINE | 159 | LF |
| 5325800000-E | 8" WATER LINE | 220 | LF |
| 5871500000-E | TRENCHLESS INSTALLATION OF 8" WATERLINE IN SOIL | 110 | LF |
| 5871510000-E | TRENCHLESS INSTALLATION OF 8" WATERLINE NOT IN SOIL | 110 | LF |
| 5540000000-E | 6" VALVE | 2 | EA |
| 5800000000-E | ABANDON 6" UTILITY PIPE | 371 | LF |
| 5329000000-E | DUCTILE IRON WATER PIPE FITTINGS | 490 | POUNDS |

5/14/99

| PROJECT REFERENCE NO. | SHEET NO. |
|---|---|
| 17BP.2.R.67 | UC-3A |
| DESIGNED BY: GJB | |
| DRAWN BY: GJB | |
| CHECKED BY: KCZ | |
| APPROVED BY: KCZ | |
| REVISED: | |
| NORTH CAROLINA DEPARTMENT OF TRANSPORTATION | |
| UTILITIES ENGINEERING SEC. PHONE:(919)707-6690 FAX:(919)250-4151 | UTILITY CONSTRUCTION PLANS ONLY |

NORTH CAROLINA PROFESSIONAL SEAL 022661 ENGINEER KEVIN C. ZOEB

DocuSigned by: Kevin C. Zoeb 12/11/2017

# UTILITY CONSTRUCTION

M A Engineering Consultants, Inc.
598 East Chatham Street • Suite 137
Cary, NC 27511
Phone: 919.297.0220 Fax: 919.297.0221
NC License: F-0160

***DOCUMENT NOT CONSIDERED FINAL UNTIL ALL SIGNATURES ARE COMPLETED***

## PIPE BEDDING DETAIL

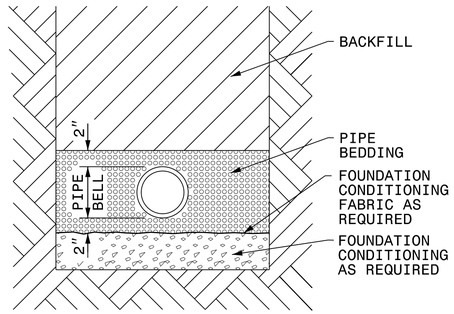


PLACE FOUNDATION CONDITIONING MATERIAL BELOW BEDDING IF REQUIRED, AS DIRECTED BY ENGINEER. PIPE BEDDED IN SELECT MATERIAL, CLASS II (TYPE 1) OR CLASS III. TRENCH BACKFILLED IN LOOSE 6" LAYERS COMPACTED TO TOP OF TRENCH USING LOCAL EXCAVATED MATERIAL IF APPROVED BY THE ENGINEER, OR SELECT MATERIAL. ALL MATERIAL SHALL BE FREE OF ROCKS, FOREIGN MATERIAL, AND FROZEN EARTH. COMPACTION SHALL BE TO APPROXIMATELY 95% DENSITY IN ACCORDANCE WITH AASHTO T-99 AS MODIFIED BY THE DEPARTMENT OF TRANSPORTATION.

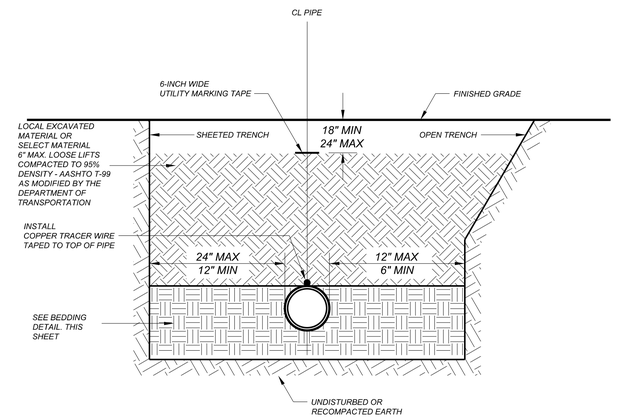


*NOTES:*
*1. ALL SHORING & TRENCHING SHALL COMPLY WITH OSHA SAFETY STANDARDS FOR THE CONSTRUCTION INDUSTRY.*
*2. BELL HOLES NOT SHOWN.*
*3. ALL BACKFILL MATERIAL SHALL BE FREE OF ROCKS, FOREIGN MATERIAL, AND FROZEN EARTH.*

## *GENERAL TRENCH DETAIL*

*NTS*

MAXIMUM TRENCH WIDTH AT TOP OF PIPE

| NOMINAL PIPE SIZE (INCHES) | TRENCH WIDTH (INCHES) | NOMINAL PIPE SIZE (INCHES) | TRENCH WIDTH (INCHES) |
|---|---|---|---|
| 4 | 28 | 20 | 44 |
| 6 | 30 | 24 | 48 |
| 8 | 32 | 30 | 54 |
| 10 | 34 | 36 | 60 |
| 12 | 36 | 42 | 66 |
| 14 | 38 | 48 | 72 |
| 16 | 40 | 54 | 78 |
| 18 | 42 | | |

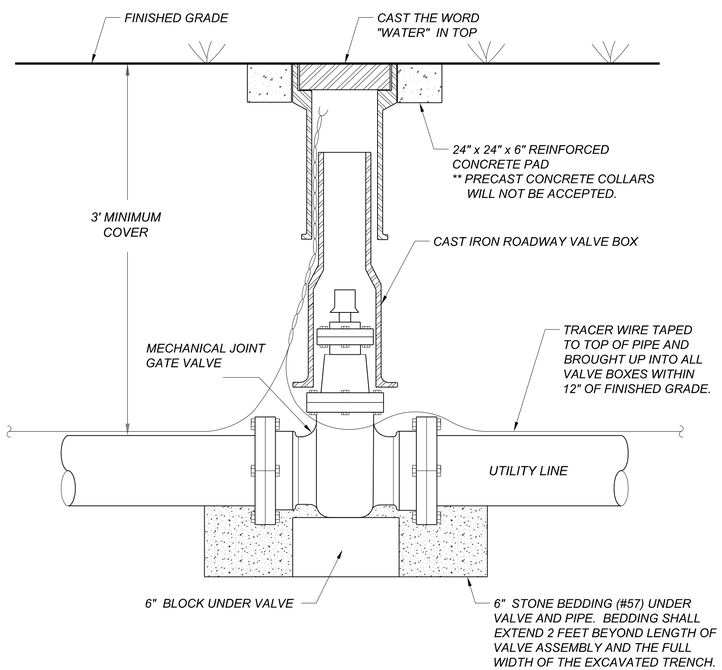


## *GATE VALVE DETAIL*

NTS

5/14/99

| PROJECT REFERENCE NO. | SHEET NO. |
|---|---|
| 17BP.2.R.67 | UC-3B |

DESIGNED BY: GJB
DRAWN BY: GJB
CHECKED BY: KCZ
APPROVED BY: KCZ
REVISED:

NORTH CAROLINA DEPARTMENT OF TRANSPORTATION

UTILITIES ENGINEERING SEC.
PHONE:(919)707-6690
FAX:(919)250-4151

NORTH CAROLINA PROFESSIONAL SEAL 22661 ENGINEER KEVIN C. ZOEB

DocuSigned by: Kevin C. Zoeb 8/11/2017

UTILITY CONSTRUCTION PLANS ONLY

UTILITY CONSTRUCTION

M A Engineering Consultants, Inc.
598 East Chatham Street - Suite 137
Cary, NC 27511
Phone: 919.297.0220 Fax: 919.297.0221
NC License: F-0160

*DOCUMENT NOT CONSIDERED FINAL UNTIL ALL SIGNATURES ARE COMPLETED*

# DUCTILE IRON PIPE RESTRAINED JOINT DESIGN TABLE

| FITTING | REQUIRED RESTRAINED LENGTH (FT) OF BARE D.I. PIPE BY DEPTH OF COVER | | | | | | | |
|---|---|---|---|---|---|---|---|---|
| **HORIZONTAL BENDS** | **3 FT** | **4 FT** | **5 FT** | **6 FT** | **7 FT** | **8 FT** | **9 FT** | **10 FT** |
| 6 INCH DIA - 11.25 DEG | 3 | 2 | 2 | 2 | 2 | 1 | 1 | 1 |
| 6 INCH DIA - 22.5 DEG | 5 | 4 | 4 | 3 | 3 | 3 | 3 | 2 |
| 6 INCH DIA - 45 DEG | 11 | 9 | 8 | 7 | 7 | 6 | 5 | 5 |
| 6 INCH DIA - 90 DEG | 26 | 22 | 19 | 17 | 16 | 14 | 13 | 12 |
| | | | | | | | | |
| **VERTICAL DOWN BENDS** | **3 FT** | **4 FT** | **5 FT** | **6 FT** | **7 FT** | **8 FT** | **9 FT** | **10 FT** |
| 6 INCH DIA - 11.25 DEG | 7 | 6 | 6 | 5 | 4 | 4 | 4 | 3 |
| 6 INCH DIA - 22.5 DEG | 15 | 13 | 11 | 10 | 9 | 8 | 8 | 7 |
| 6 INCH DIA - 45 DEG | 31 | 27 | 23 | 21 | 19 | 17 | 16 | 15 |
| | | | | | | | | |
| **VERTICAL UP BENDS** | **3 FT** | **4 FT** | **5 FT** | **6 FT** | **7 FT** | **8 FT** | **9 FT** | **10 FT** |
| 6 INCH DIA - 11.25 DEG | 3 | 2 | 2 | 2 | 2 | 1 | 1 | 1 |
| 6 INCH DIA - 22.5 DEG | 5 | 4 | 4 | 3 | 3 | 3 | 3 | 2 |
| 6 INCH DIA - 45 DEG | 11 | 9 | 8 | 7 | 7 | 6 | 5 | 5 |

**ASSUMPTIONS**

LAYING CONDITION = TYPE 4
SOIL DESIGNATION = GC = COHESIVE-GRANULAR
DESIGN PRESSURE = 200 PSI (TEST PRESSURE)
SAFETY FACTOR = 1.5

**NOTES**

1. RESTRAINED LENGTH IS MEASURED FROM THE CENTER OF THE BEND AS FOLLOWS:
   A. HORIZONTAL AND VERTICAL BENDS: ALONG EACH SIDE OF BEND.
   B. HORIZONTAL AND VERTICAL BENDS - OFFSET OR COMBINED: ALONG THE OUTER SIDE OF EACH BEND.
   ALL PIPE BETWEEN THE TWO BENDS SHALL BE RESTRAINED JOINT WHEN THE DISTANCE BETWEEN THEM IS EQUAL TO OR LESS THAN THE REQUIRED RESTRAINED LENGTH. WHEN THE DISTANCE BETWEEN BENDS IS LESS THAN REQUIRED, THE BALANCE OF THE REQUIRED RESTRAINED LENGTH SHALL BE ADDED ON TO THE LENGTH ALONG THE OUTSIDE OF EACH BEND RESPECTIVELY TO MAKE UP FOR THE DEFICIENCY IN THAT DIRECTION.
   **HORIZONTAL BEND EXAMPLE...**
   INSTALL A 8 INCH 45 DEG BEND AND A 22.5 DEG BEND WITH 10 FEET BETWEEN BENDS AND 4 FEET OF COVER. THE CONTRACTOR SHALL PROVIDE AN ADDITIONAL 1 FOOT OF RESTRAINED LENGTH BEYOND THE 45 DEGREE BEND (FOR A TOTAL OF 13 FEET) AND AN ADDITIONAL 7 FEET OF RESTRAINED LENGTH BEYOND THE 22.5 DEGREE BEND (FOR A TOTAL OF 13 FEET).
2. WHEN IT IS NOT POSSIBLE TO INSTALL THE RESTRAINED LENGTHS AS NOTED BY THIS TABLE, THE CONTRACTOR SHALL INSTALL THE APPROPRIATE CONCRETE THRUST RESTRAINTS AS PER THE DETAILS HEREIN.

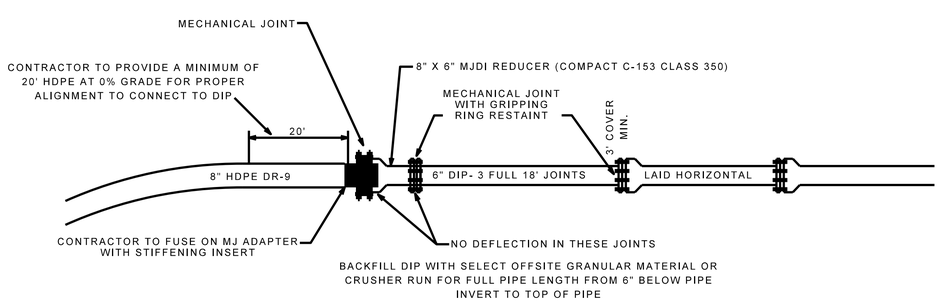


## 8" HDPE X 6" DIP TRANSITION DETAIL

NOT TO SCALE

| PROJECT REFERENCE NO. | SHEET NO. |
|---|---|
| 17BP.2.R.67 | UC-4 |

DESIGNED BY: GJB
DRAWN BY: GJB
CHECKED BY: KCZ
APPROVED BY: KCZ
REVISED:

NORTH CAROLINA
DEPARTMENT OF
TRANSPORTATION

UTILITIES ENGINEERING SEC.
PHONE:(919)707-6690
FAX:(919)250-4151

DocuSigned by:
Kevin C. Zdeb
F0C1B5C37A66451...

NORTH CAROLINA PROFESSIONAL ENGINEER SEAL 27611 KEVIN C. ZDEB
1/26/2017

UTILITY CONSTRUCTION PLANS ONLY

# UTILITY CONSTRUCTION

M A Engineering Consultants, Inc.
598 East Chatham Street - Suite 137
Cary, NC 27511
Phone: 919.297.0220 Fax: 919.297.0221
NC License: F-0160

***DOCUMENT NOT CONSIDERED FINAL UNTIL ALL SIGNATURES ARE COMPLETED***

UTILITY OWNERS ON THIS PROJECT

BEAUFORT COUNTY UTILITIES
UTILITY: 6" WATER LINE
CONTACT: ERICK JENNINGS
PHONE: 252-975-0720

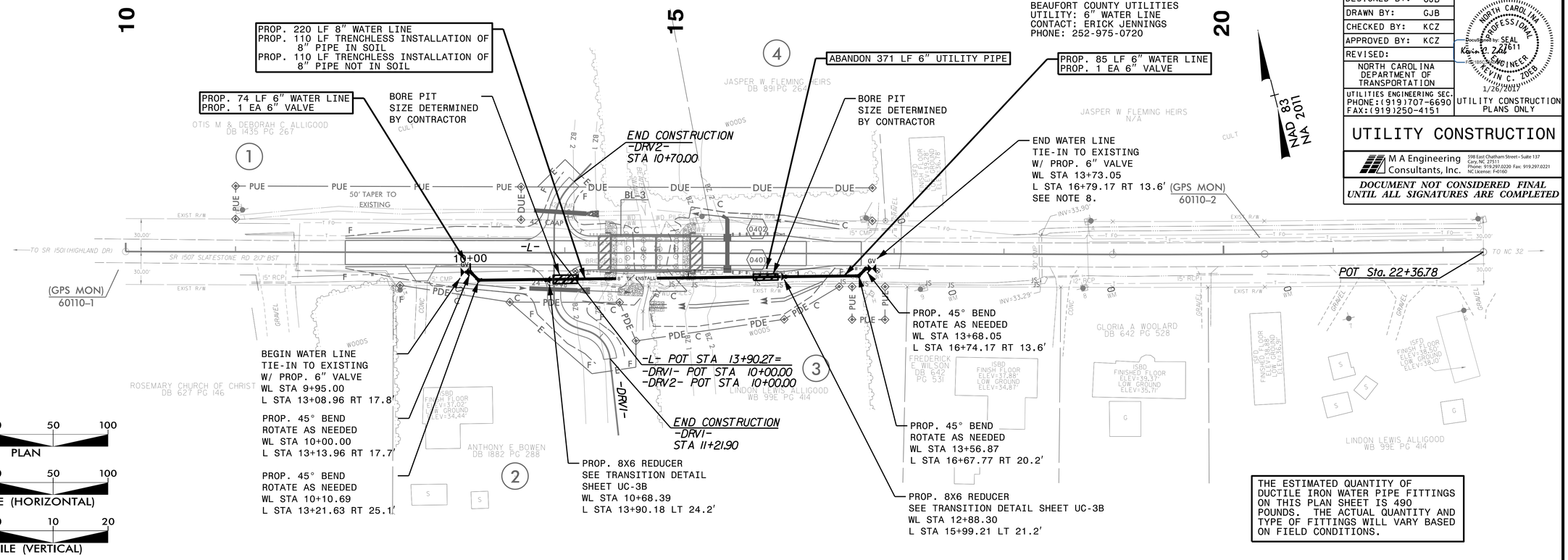

PROP. 220 LF 8" WATER LINE
PROP. 110 LF TRENCHLESS INSTALLATION OF 8" PIPE IN SOIL
PROP. 110 LF TRENCHLESS INSTALLATION OF 8" PIPE NOT IN SOIL

PROP. 74 LF 6" WATER LINE
PROP. 1 EA 6" VALVE

BORE PIT SIZE DETERMINED BY CONTRACTOR

END CONSTRUCTION
-DRV2-
STA 10+70.00

ABANDON 371 LF 6" UTILITY PIPE

BORE PIT SIZE DETERMINED BY CONTRACTOR

PROP. 85 LF 6" WATER LINE
PROP. 1 EA 6" VALVE

END WATER LINE
TIE-IN TO EXISTING
W/ PROP. 6" VALVE
WL STA 13+73.05
L STA 16+79.17 RT 13.6'
SEE NOTE 8.

BEGIN WATER LINE
TIE-IN TO EXISTING
W/ PROP. 6" VALVE
WL STA 9+95.00
L STA 13+08.96 RT 17.8'

PROP. 45° BEND
ROTATE AS NEEDED
WL STA 10+00.00
L STA 13+13.96 RT 17.7'

PROP. 45° BEND
ROTATE AS NEEDED
WL STA 10+10.69
L STA 13+21.63 RT 25.1'

-L- POT STA 13+90.27=
-DRV1- POT STA 10+00.00
-DRV2- POT STA 10+00.00

END CONSTRUCTION
-DRV1-
STA 11+21.90

PROP. 8X6 REDUCER
SEE TRANSITION DETAIL
SHEET UC-3B
WL STA 10+68.39
L STA 13+90.18 LT 24.2'

PROP. 45° BEND
ROTATE AS NEEDED
WL STA 13+68.05
L STA 16+74.17 RT 13.6'

PROP. 45° BEND
ROTATE AS NEEDED
WL STA 13+56.87
L STA 16+67.77 RT 20.2'

PROP. 8X6 REDUCER
SEE TRANSITION DETAIL SHEET UC-3B
WL STA 12+88.30
L STA 15+99.21 LT 21.2'

THE ESTIMATED QUANTITY OF DUCTILE IRON WATER PIPE FITTINGS ON THIS PLAN SHEET IS 490 POUNDS. THE ACTUAL QUANTITY AND TYPE OF FITTINGS WILL VARY BASED ON FIELD CONDITIONS.

50 25 0 50 100
PLAN

50 25 0 50 100
PROFILE (HORIZONTAL)

10 5 0 10 20
PROFILE (VERTICAL)

REVISIONS

# -WL-

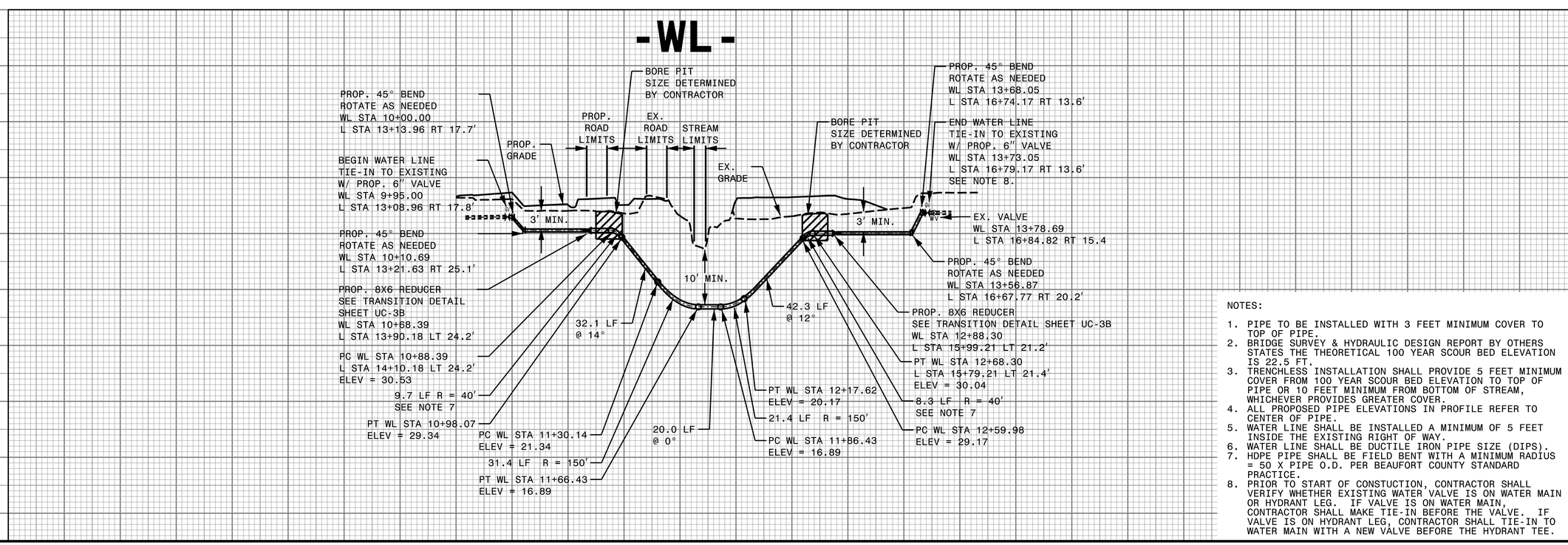

BORE PIT
SIZE DETERMINED
BY CONTRACTOR

PROP. 45° BEND
ROTATE AS NEEDED
WL STA 10+00.00
L STA 13+13.96 RT 17.7'

BEGIN WATER LINE
TIE-IN TO EXISTING
W/ PROP. 6" VALVE
WL STA 9+95.00
L STA 13+08.96 RT 17.8'

PROP. 45° BEND
ROTATE AS NEEDED
WL STA 10+10.69
L STA 13+21.63 RT 25.1'

PROP. 8X6 REDUCER
SEE TRANSITION DETAIL
SHEET UC-3B
WL STA 10+68.39
L STA 13+90.18 LT 24.2'

PC WL STA 10+88.39
L STA 14+10.18 LT 24.2'
ELEV = 30.53

9.7 LF R = 40'
SEE NOTE 7

PT WL STA 10+98.07
ELEV = 29.34

32.1 LF
@ 14°

PC WL STA 11+30.14
ELEV = 21.34

31.4 LF R = 150'

PT WL STA 11+66.43
ELEV = 16.89

20.0 LF
@ 0°

42.3 LF
@ 12°

PT WL STA 12+17.62
ELEV = 20.17

21.4 LF R = 150'

PC WL STA 11+86.43
ELEV = 16.89

BORE PIT
SIZE DETERMINED
BY CONTRACTOR

PROP. 45° BEND
ROTATE AS NEEDED
WL STA 13+68.05
L STA 16+74.17 RT 13.6'

END WATER LINE
TIE-IN TO EXISTING
W/ PROP. 6" VALVE
WL STA 13+73.05
L STA 16+79.17 RT 13.6'
SEE NOTE 8.

EX. VALVE
WL STA 13+78.69
L STA 16+84.82 RT 15.4

PROP. 45° BEND
ROTATE AS NEEDED
WL STA 13+56.87
L STA 16+67.77 RT 20.2'

PROP. 8X6 REDUCER
SEE TRANSITION DETAIL SHEET UC-3B
WL STA 12+88.30
L STA 15+99.21 LT 21.2'

PT WL STA 12+68.30
L STA 15+79.21 LT 21.4'
ELEV = 30.04

8.3 LF R = 40'
SEE NOTE 7

PC WL STA 12+59.98
ELEV = 29.17

NOTES:

1. PIPE TO BE INSTALLED WITH 3 FEET MINIMUM COVER TO TOP OF PIPE.
2. BRIDGE SURVEY & HYDRAULIC DESIGN REPORT BY OTHERS STATES THE THEORETICAL 100 YEAR SCOUR BED ELEVATION IS 22.5 FT.
3. TRENCHLESS INSTALLATION SHALL PROVIDE 5 FEET MINIMUM COVER FROM 100 YEAR SCOUR BED ELEVATION TO TOP OF PIPE OR 10 FEET MINIMUM FROM BOTTOM OF STREAM, WHICHEVER PROVIDES GREATER COVER.
4. ALL PROPOSED PIPE ELEVATIONS IN PROFILE REFER TO CENTER OF PIPE.
5. WATER LINE SHALL BE INSTALLED A MINIMUM OF 5 FEET INSIDE THE EXISTING RIGHT OF WAY.
6. WATER LINE SHALL BE DUCTILE IRON PIPE SIZE (DIPS).
7. HDPE PIPE SHALL BE FIELD BENT WITH A MINIMUM RADIUS = 50 X PIPE O.D. PER BEAUFORT COUNTY STANDARD PRACTICE.
8. PRIOR TO START OF CONSTUCTION, CONTRACTOR SHALL VERIFY WHETHER EXISTING WATER VALVE IS ON WATER MAIN OR HYDRANT LEG. IF VALVE IS ON WATER MAIN, CONTRACTOR SHALL MAKE TIE-IN BEFORE THE VALVE. IF VALVE IS ON HYDRANT LEG, CONTRACTOR SHALL TIE-IN TO WATER MAIN WITH A NEW VALVE BEFORE THE HYDRANT TEE.

TIP PROJECT: 17BP.2.R.67

See Sheet 1-A For Index of Sheets
See Sheet 1-B for Conventional Plan Sheet Symbols
See Sheet 1C-1 for Survey Control Sheet

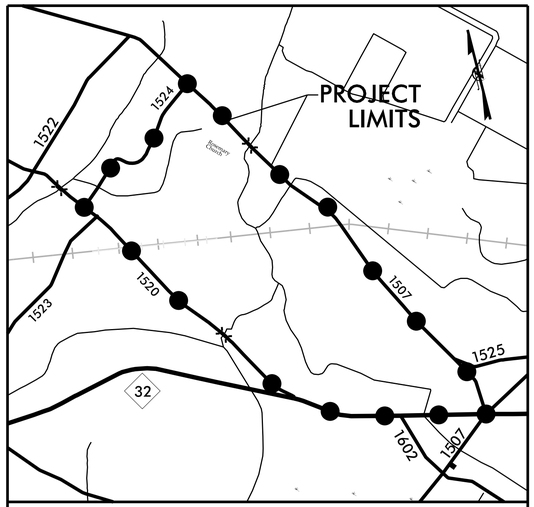


VICINITY MAP
OFFSITE DETOUR

STATE OF NORTH CAROLINA
DIVISION OF HIGHWAYS

# UTILITIES BY OTHERS PLANS
# BEAUFORT COUNTY

**LOCATION: REPLACE BRIDGE NO. 110 OVER BEAVERDAM SWAMP ON SR 1507 (SLATESTONE ROAD)**

**TYPE OF WORK: RELOCATION OF POWER AND PHONE**

| T.I.P. NO. | SHEET NO. |
|---|---|
| 17BP.2.R.67 | UO–1 |

NOTE:
ALL UTILITY WORK SHOWN ON THIS SHEET IS DONE BY OTHERS.
NO PAYMENT WILL BE MADE TO THE CONTRACTOR FOR UTILITY WORK SHOWN ON THIS SHEET.

NAD 83/2011

4

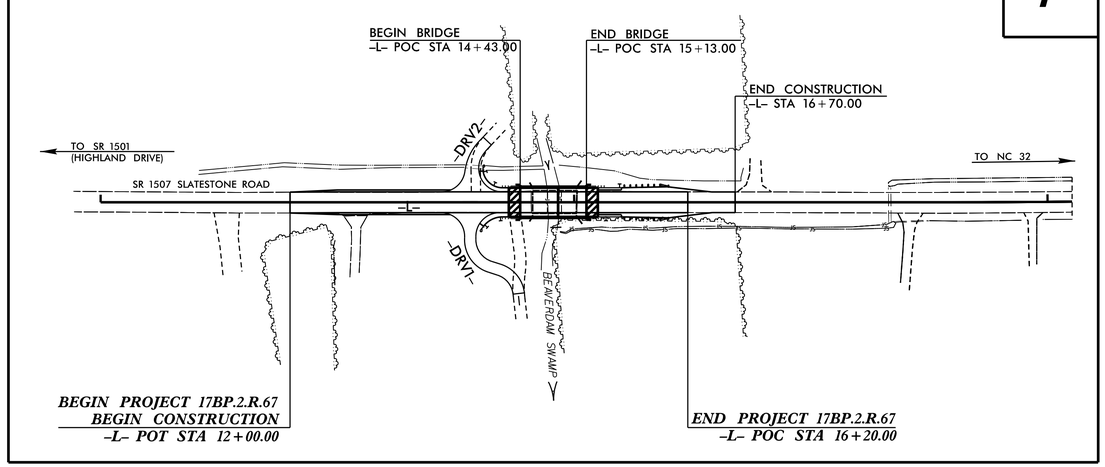


## GRAPHIC SCALES

50 25 0 50 100
PLANS

50 25 0 50 100
PROFILE (HORIZONTAL)

10 5 0 10 20
PROFILE (VERTICAL)

## INDEX OF SHEETS

| SHEET NO.: | DESCRIPTION: |
|---|---|
| UO–1 | TITLE SHEET |
| UO–02 | UBO PLAN SHEET |

## UTILITY OWNERS WITH CONFLICTS

(A) POWER – CITY OF WASHINGTON

(B) PHONE – TRI COUNTY TELEPHONE


PREPARED IN THE OFFICE OF:

M A Engineering Consultants, Inc.
NC License: F-0160
598 East Chatham Street Suite 137 Cary, NC 27511
Phone: 919.297.0220 Fax: 919.297.0221

WEBB WHITE PROJECT UTILITY COORDINATOR

DIVISION OF HIGHWAYS
DIVISION 2
105 PACTOLUS HWY. (NC 33)
PO BOX 1587
GREENVILLE, NC 27835

HON YEUNG, PE BRIDGE PROGRAM MANAGER

| PROJECT REFERENCE NO. | SHEET NO. |
|---|---|
| 17BP.2.R.67 | U0-2 |

# UTILITIES BY OTHERS

NOTE:
ALL UTILITY WORK SHOWN ON THIS SHEET WILL BE DONE BY OTHERS. NO PAYMENT WILL BE MADE TO THE CONTRACTOR FOR UTILITY WORK SHOWN ON THIS SHEET.

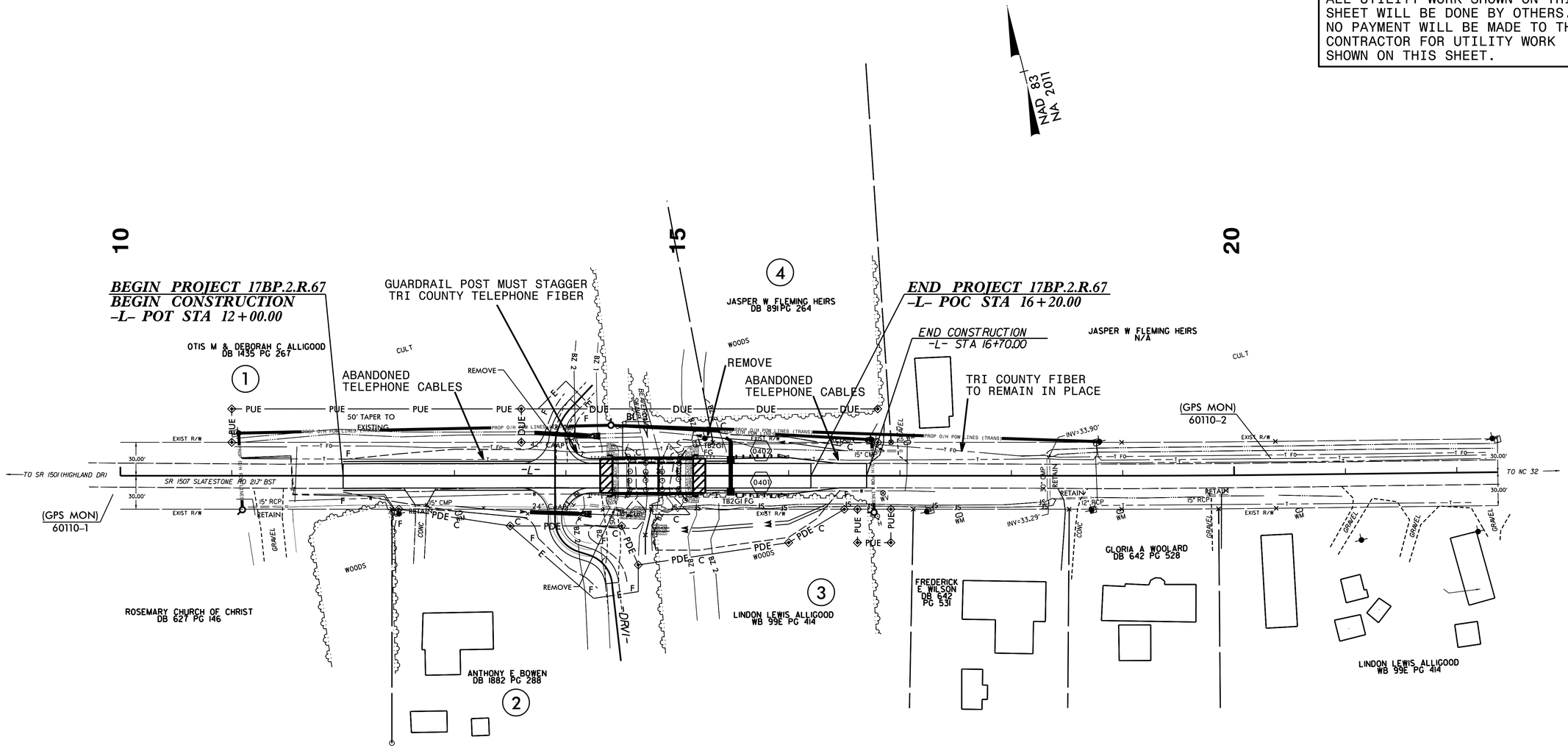



M A Engineering Consultants, Inc.
NC License: F-0160
598 East Chatham Street Suite 137 Cary, NC 27511
Phone: 919.297.0220 Fax: 919.297.0221

| PROJ. REFERENCE NO. | SHEET NO. |
|---|---|
| 17BP.2.R.67 | X-1 |

0 5 10

Note: Approximate quantities only. Unclassified Excavation, Borrow Excavation, Fine Grading, Clearing and Grubbing, and Removal of Existing Pavement will be paid for at the contract lump sum price for "Grading."

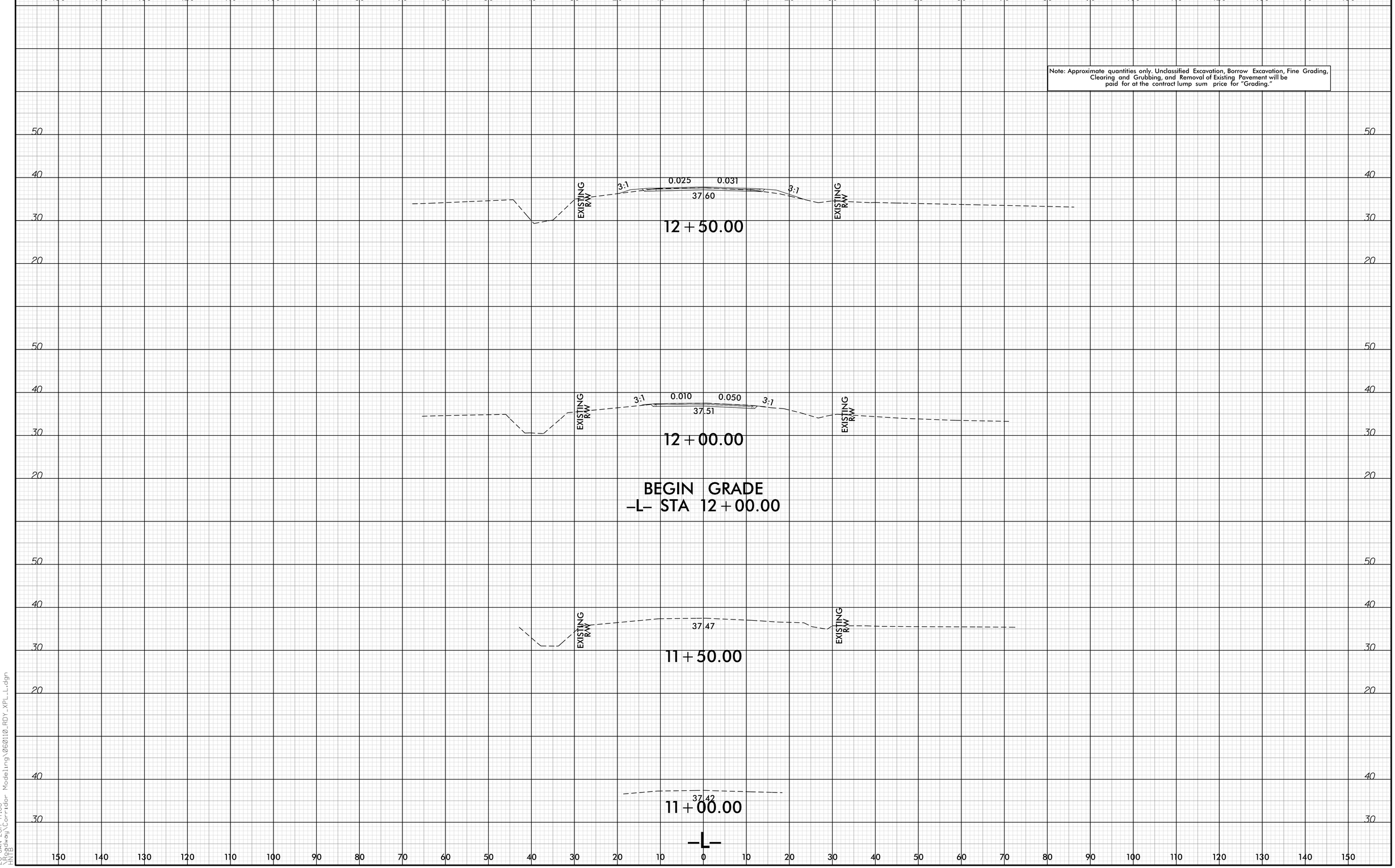


8/23/99

26-JAN-2017 17:08
X:\Highway Corridor Modeling\060110_RDY_XPL_L.dgn
HNTB

| PROJ. REFERENCE NO. | SHEET NO. |
|---|---|
| 17BP.2.R.67 | X-2 |

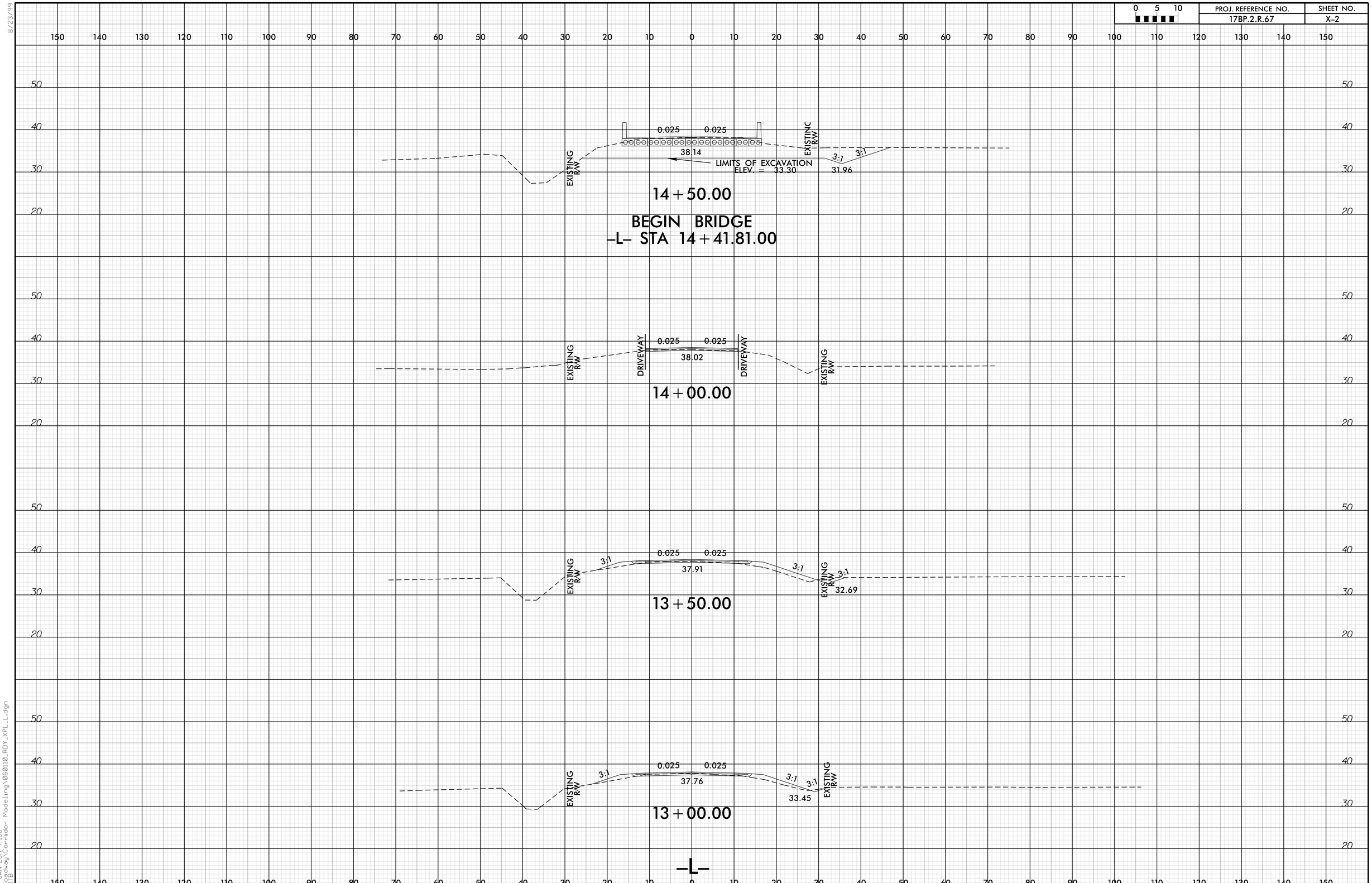


8/23/99

26-JAN-2017 17:08
HNTB
Roadway Corridor Modeling\060110_RDY_XPL_L.dgn

| PROJ. REFERENCE NO. | SHEET NO. |
|---|---|
| 17BP.2.R.67 | X-3 |

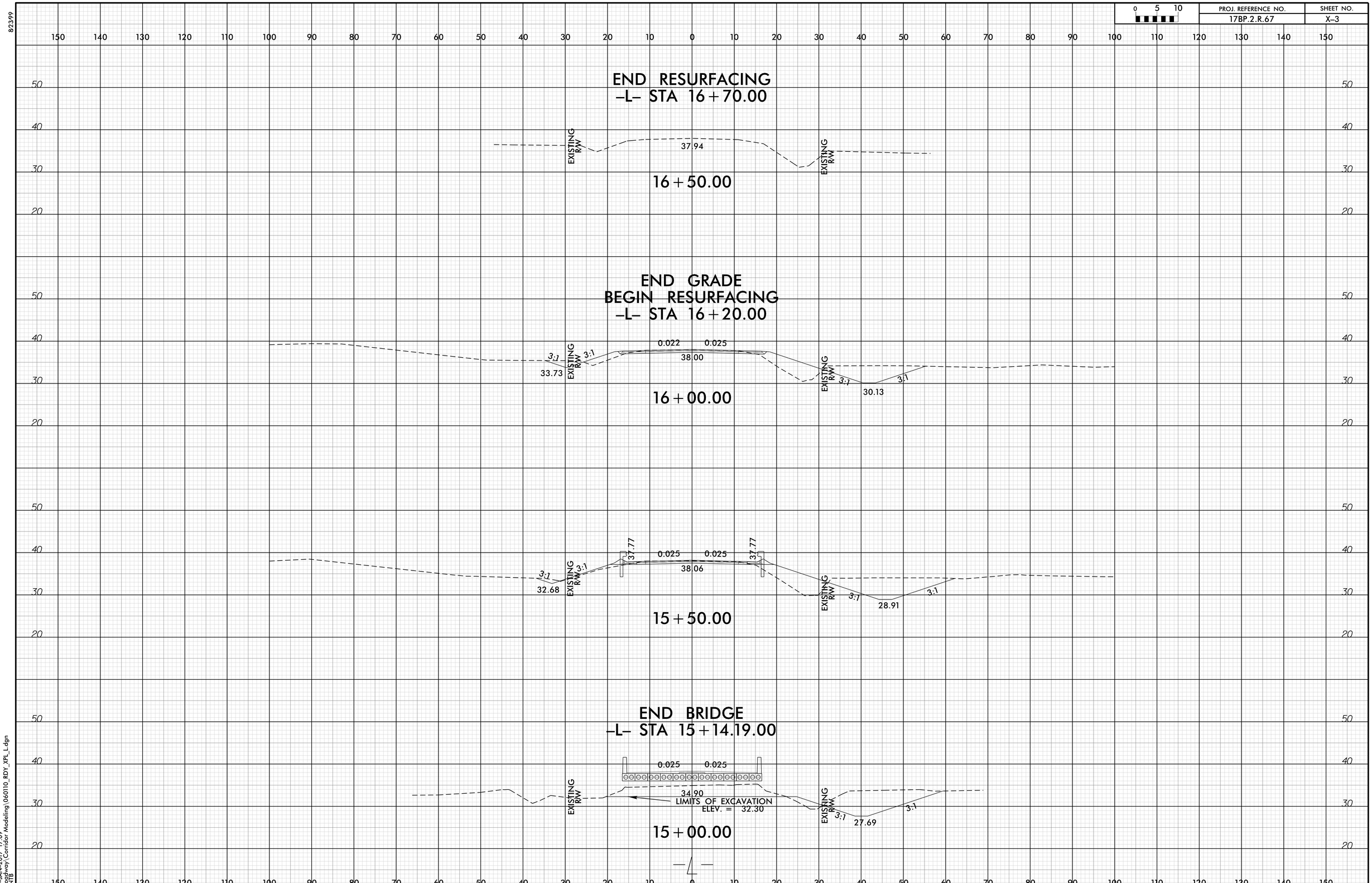


82399

26-JAN-2017 17:09
X:\Highway\Corridor Modeling\060110_RDY_XPL_L.dgn
HNTB

| PROJ. REFERENCE NO. | SHEET NO. |
|---|---|
| 17BP.2.R.67 | X-4 |

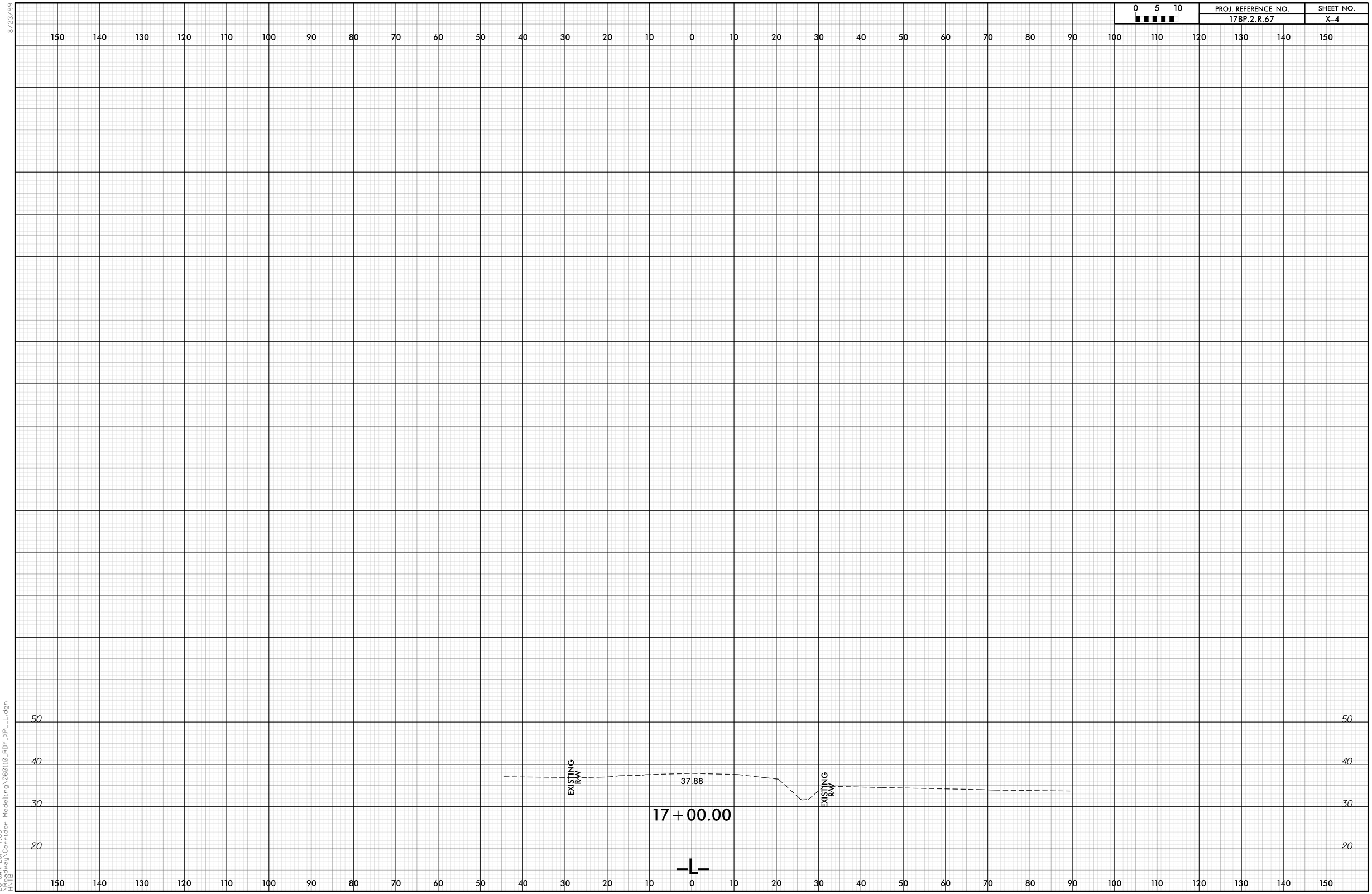


8/23/99

26-JAN-2017 17:09
X:\Roadway\Corridor Modeling\060110_RDY_XPL_L.dgn
HNTB

| PROJ. REFERENCE NO. | SHEET NO. |
|---|---|
| 17BP.2.R.67 | X-5 |

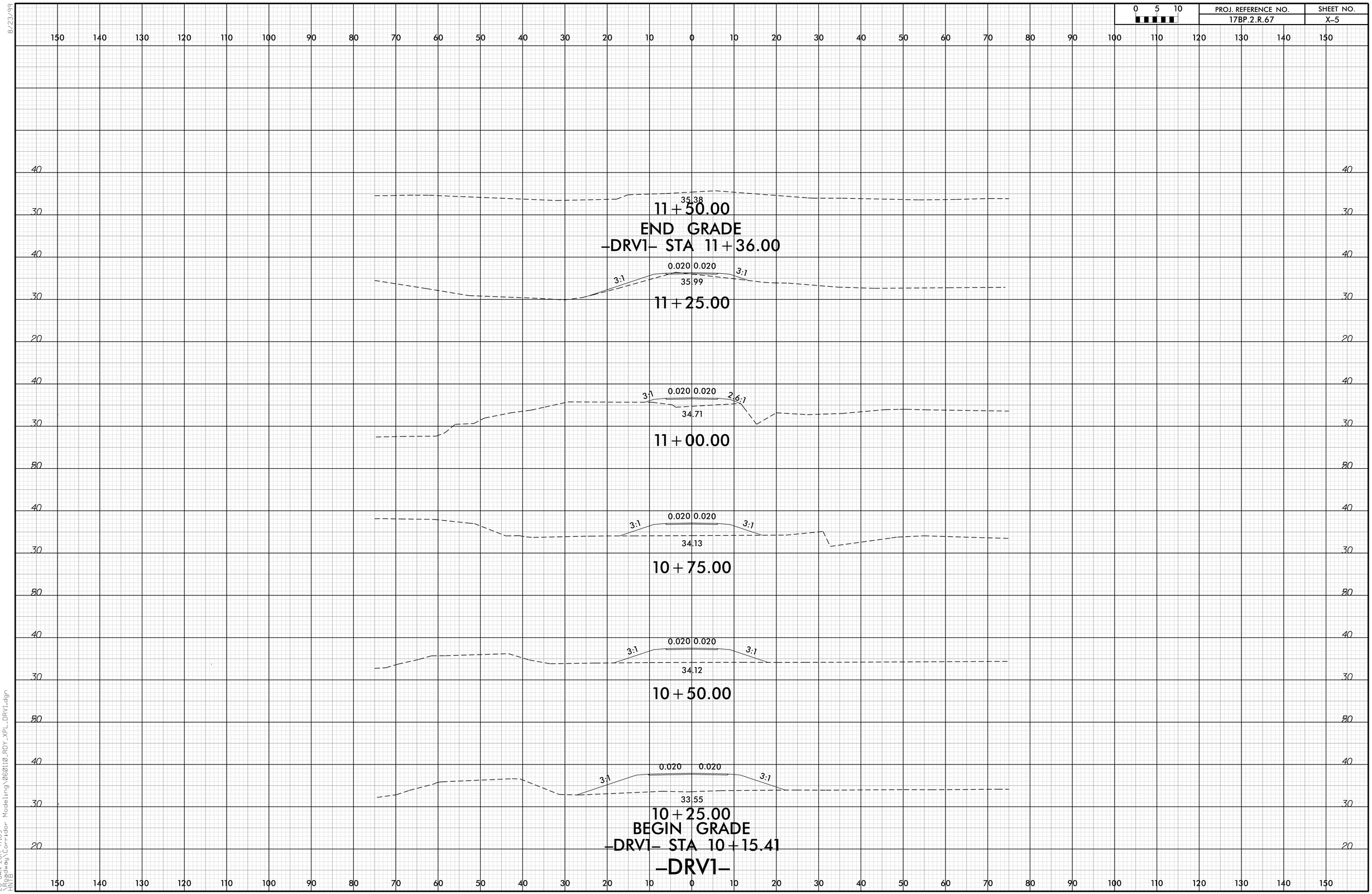


8/23/99

26-JAN-2017 17:09
HNTB
Drawing\Corridor Modeling\060110_RDY_XPL_DRV1.dgn

| PROJ. REFERENCE NO. | SHEET NO. |
|---|---|
| 17BP.2.R.67 | X-6 |

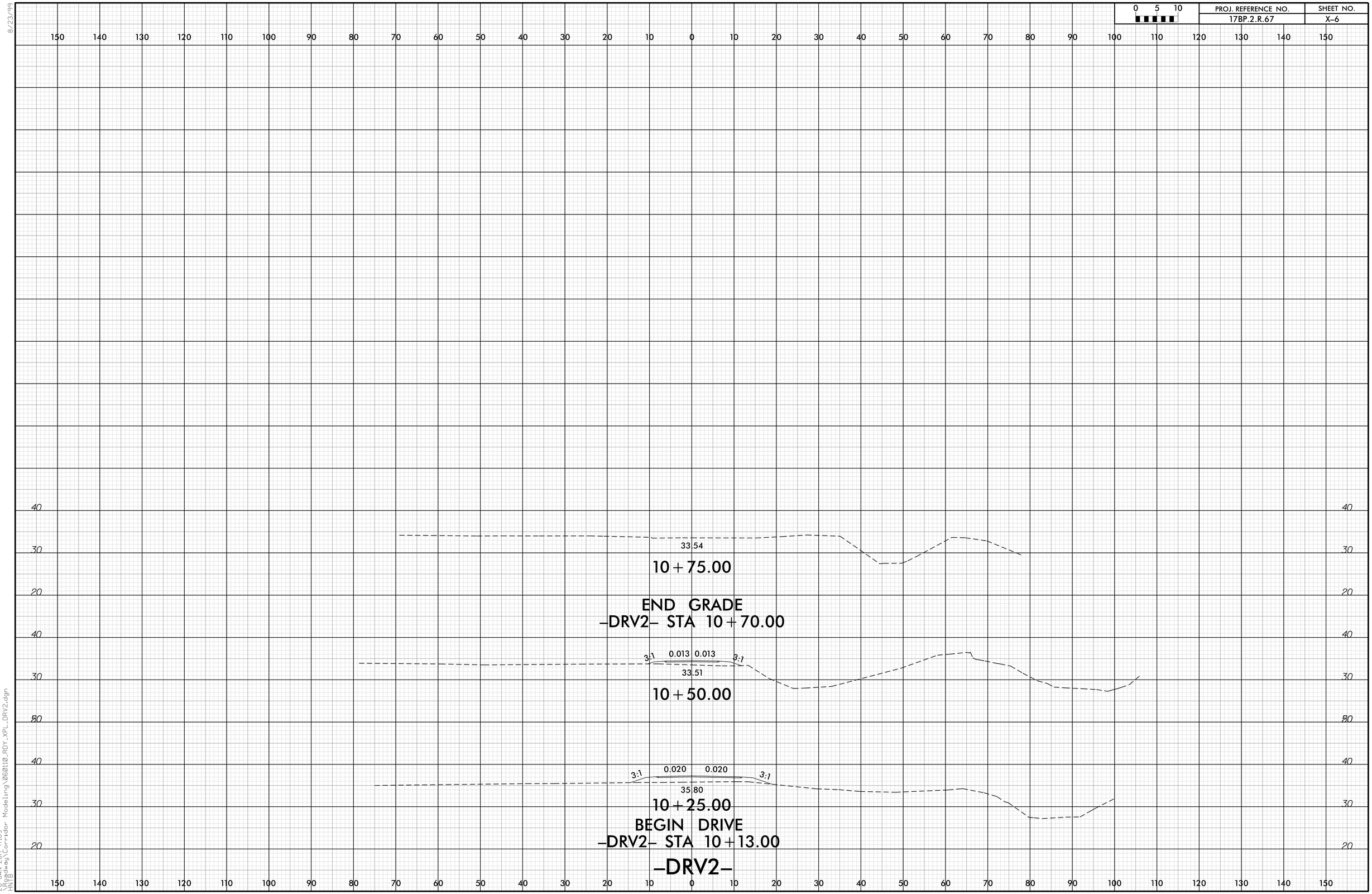


8/23/99

26-JAN-2017 17:09
HNTB
Roadway Corridor Modeling\060110_RDY_XPL_DRV2.dgn

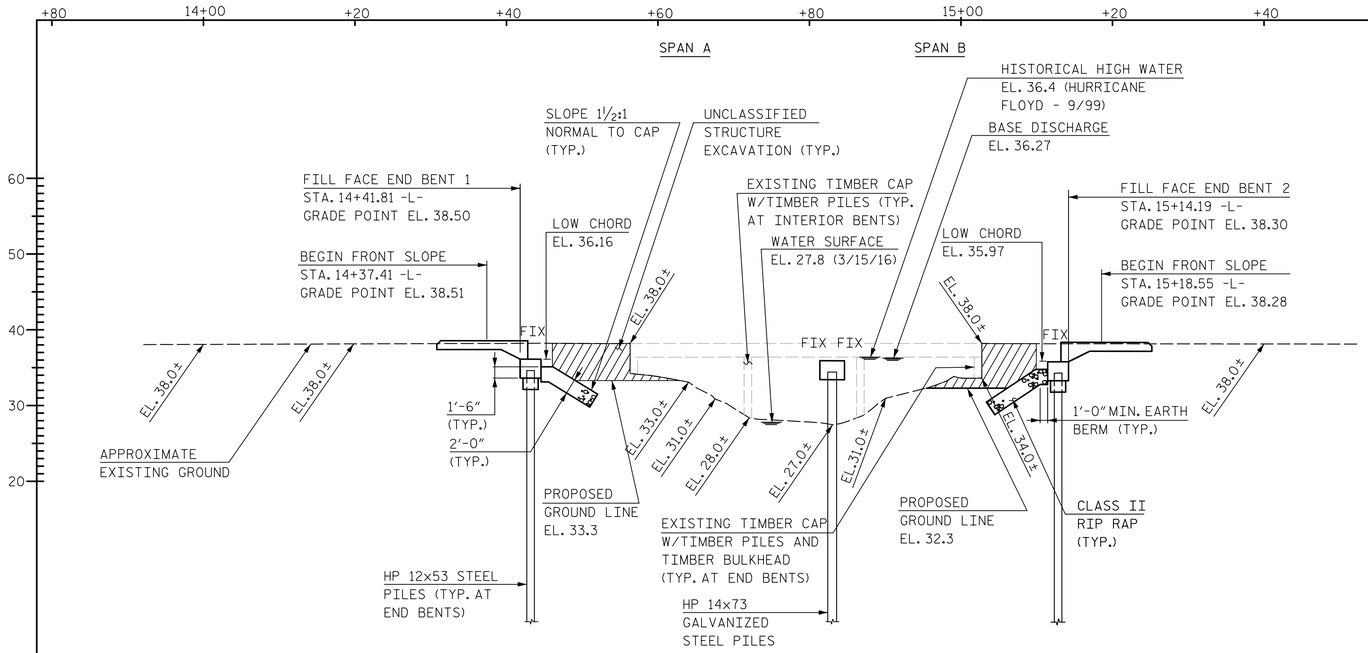


END BENT 1 BENT 1 END BENT 2

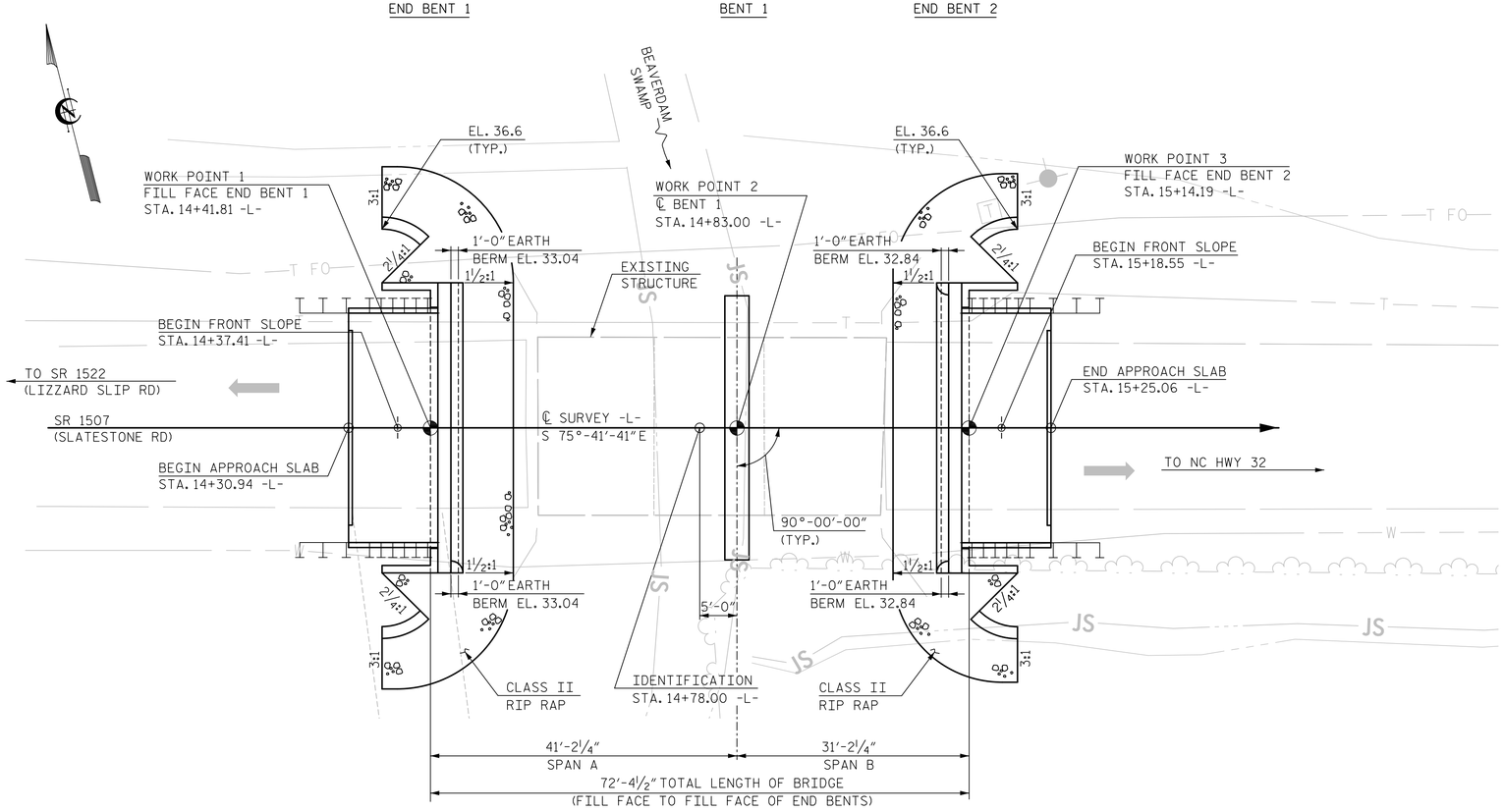


## PLAN

NOTE: PILES NOT SHOWN FOR CLARITY.

FOR GENERAL NOTES, SEE SHEET 2.

## BRIDGE HYDRAULIC DATA

| | | |
|---|---|---|
| DESIGN DISCHARGE | = | 721 CFS |
| FREQUENCY OF DESIGN FLOOD | = | 25 YR |
| DESIGN HIGH WATER ELEVATION | = | 35.6 FT. |
| DRAINAGE AREA | = | 2.7 SQ. MI. |
| BASIC DISCHARGE (Q100) | = | 1,127 CFS |
| BASIC HIGH WATER ELEVATION | = | 36.27 FT. |

## OVERTOPPING FLOOD DATA

| | | |
|---|---|---|
| OVERTOPPING DISCHARGE | = | N/A |
| FREQUENCY OF OVERTOPPING FLOOD | = | 500-YR (+) |
| OVERTOPPING FLOOD ELEVATION | = | 37.39 FT. |

NOTE: OVERTOPPING OCCURS AT ROADWAY STA. 10+68.00

PI STA. = 13+90.00
ELEV = 38.67
V.C. = 150'


## GRADE DATA -L-

I HEREBY CERTIFY THESE PLANS
ARE AS-BUILT PLANS

PROJECT NO. 17BP.2.R.67

BEAUFORT COUNTY

STATION: 14+78.00 -L-

SHEET 1 OF 2 REPLACES BRIDGE NO. 110

DocuSigned by:
Paul J. Barber
NORTH CAROLINA PROFESSIONAL SEAL 12916 ENGINEER PAUL J. BARBER
12/13/2016

**DOCUMENT NOT CONSIDERED FINAL UNLESS ALL SIGNATURES COMPLETED**

HNTB NORTH CAROLINA, P.C.
NC License No. C-1554
343 E. Six Forks Rd., Suite 200, Raleigh, N.C. 27609

DRAWN BY J. BAYNE DATE 12/16
CHECKED BY P. BABER DATE 12/16
DWG. NO. 1

STATE OF NORTH CAROLINA
DEPARTMENT OF TRANSPORTATION
RALEIGH

GENERAL DRAWING
FOR BRIDGE ON SR 1507
OVER BEAVERDAM SWAMP
BETWEEN SR 1522
AND NC HWY 32

| REVISIONS | | | | | | SHEET NO. |
|---|---|---|---|---|---|---|
| NO. | BY | DATE | NO. | BY | DATE | S-1 |
| 1 | | | 3 | | | TOTAL SHEETS |
| 2 | | | 4 | | | 17 |

BM: - "60110-2" ALUMINUM CAP ON REBAR, 14.89' LT. OF STA. 20+33.1 -L-, EL. 37.32

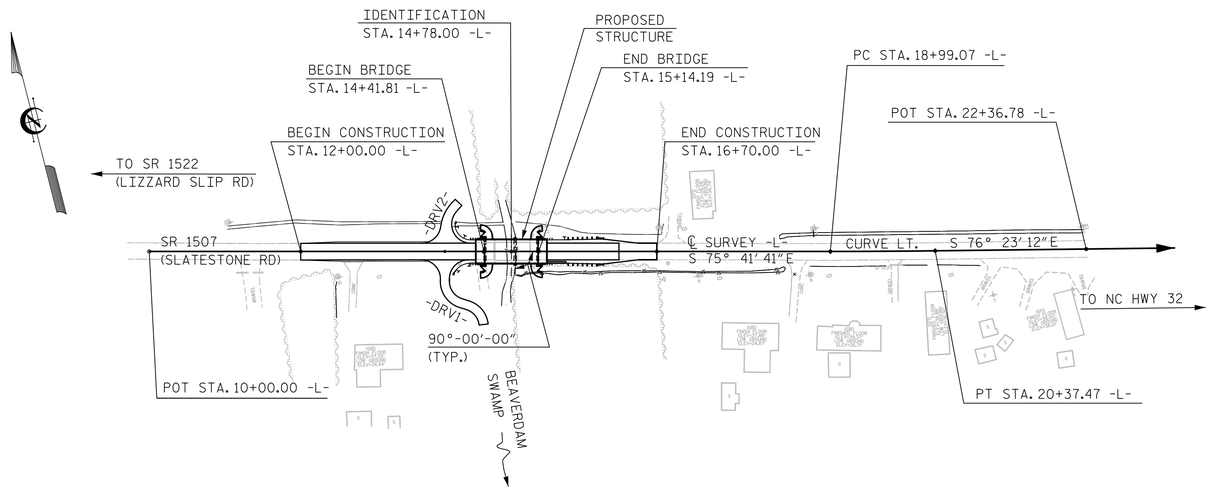


LOCATION SKETCH

FOR UTILITY INFORMATION, SEE UTILITY PLANS AND SPECIAL PROVISIONS.

FOUNDATION NOTES:

FOR PILES, SEE GEOTECHNICAL SPECIAL PROVISIONS AND SECTION 450 OF THE STANDARD SPECIFICATIONS.

PILES AT END BENT NO. 1 ARE DESIGNED FOR A FACTORED RESISTANCE OF 59 TONS PER PILE.

DRIVE PILES AT END BENT NO. 1 TO A REQUIRED DRIVING RESISTANCE OF 100 TONS PER PILE.

PILES AT END BENT NO. 2 ARE DESIGNED FOR A FACTORED RESISTANCE OF 51 TONS PER PILE.

DRIVE PILES AT END BENT NO. 2 TO A REQUIRED DRIVING RESISTANCE OF 85 TONS PER PILE.

PILES AT BENT NO. 1 ARE DESIGNED FOR A FACTORED RESISTANCE OF 88 TONS PER PILE.

DRIVE PILES AT BENT NO. 1 TO A REQUIRED DRIVING RESISTANCE OF 150 TONS PER PILE. THIS REQUIRED DRIVING RESISTANCE INCLUDES ADDITIONAL RESISTANCE FOR DOWNDRAG OR SCOUR.

INSTALL PILES AT BENT NO. 1 TO A TIP ELEVATION NO HIGHER THAN -3.0 FT.

THE SCOUR CRITICAL ELEVATION FOR BENT NO. 1 IS ELEVATION 20.0 FT. SCOUR CRITICAL ELEVATIONS ARE USED TO MONITOR POSSIBLE SCOUR PROBLEMS DURING THE LIFE OF THE STRUCTURE.

TESTING PILES WITH THE PDA DURING DRIVING, RESTRIKING OR REDRIVING MAY BE REQUIRED. THE ENGINEER WILL DETERMINE THE NEED FOR PDA TESTING. FOR PDA TESTING, SEE SECTION 450 OF THE STANDARD SPECIFICATIONS.

TOTAL BILL OF MATERIAL

| | REMOVAL OF EXISTING STRUCTURE AT STATION 14+78.00 -L- | PDA TESTING | UNCLASSIFIED STRUCTURE EXCAVATION AT STATION 14+78.00 -L- | CLASS A CONCRETE | BRIDGE APPROACH SLABS AT STATION 14+78.00 -L- | REINFORCING STEEL | HP 12x53 STEEL PILES | | HP 14x73 GALVANIZED STEEL PILES | | PILE REDRIVES | VERTICAL CONCRETE BARRIER RAIL | RIP RAP CLASS II (2'-0" THICK) | GEOTEXTILE FOR DRAINAGE | ELASTOMERIC BEARINGS | 3'-0"x1'-9" PRESTRESSED CONCRETE CORED SLABS | | ASBESTOS ASSESSMENT |
|---|---|---|---|---|---|---|---|---|---|---|---|---|---|---|---|---|---|---|
| | LUMP SUM | EACH | LUMP SUM | CU. YDS. | LUMP SUM | LBS. | NO. | LIN. FT. | NO. | LIN. FT. | EACH | LIN. FT. | TONS | SQ. YDS. | LUMP SUM | NO. | LIN. FT. | LUMP SUM |
| SUPERSTRUCTURE | LUMP SUM | — | — | — | LUMP SUM | — | — | — | — | — | — | 140.50 | — | — | LUMP SUM | 22 | 770 | — |
| END BENT 1 | — | — | LUMP SUM | 14.2 | — | 2,115 | 7 | 525 | — | — | 4 | — | 60 | 65 | — | — | — | — |
| BENT 1 | — | — | — | 10.7 | — | 2,136 | — | — | 8 | 640 | 4 | — | — | — | — | — | — | — |
| END BENT 2 | — | — | LUMP SUM | 14.2 | — | 2,115 | 7 | 490 | — | — | 4 | — | 75 | 85 | — | — | — | — |
| TOTAL | LUMP SUM | 2 | LUMP SUM | 39.1 | LUMP SUM | 6,366 | 14 | 1,015 | 8 | 640 | 12 | 140.50 | 135 | 150 | LUMP SUM | 22 | 770 | LUMP SUM |

GENERAL NOTES

ASSUMED LIVE LOAD = HL-93 OR ALTERNATE LOADING.

THIS BRIDGE HAS BEEN DESIGNED IN ACCORDANCE WITH THE AASHTO LRFD BRIDGE DESIGN SPECIFICATIONS.

THIS BRIDGE IS LOCATED IN SEISMIC ZONE 1.

THIS BRIDGE SHALL BE CONSTRUCTED USING TOP-DOWN CONSTRUCTION METHODS. THE USE OF A TEMPORARY CAUSEWAY OR WORK BRIDGE IS NOT PERMITTED.

FOR OTHER DESIGN DATA AND GENERAL NOTES, SEE SHEET SN.

FOR SUBMITTAL OF WORKING DRAWINGS, SEE SPECIAL PROVISIONS.

FOR FALSEWORK AND FORMWORK, SEE SPECIAL PROVISIONS.

FOR CRANE SAFETY, SEE SPECIAL PROVISIONS.

FOR GROUT FOR STRUCTURES, SEE SPECIAL PROVISIONS.

THE MATERIAL SHOWN IN THE CROSS-HATCHED AREA SHALL BE EXCAVATED FOR A DISTANCE OF 19.5 FT. ON EACH SIDE OF CENTERLINE BRIDGE AS DIRECTED BY THE ENGINEER. THIS WORK WILL BE PAID FOR AT THE CONTRACT LUMP SUM PRICE FOR UNCLASSIFIED STRUCTURE EXCAVATION. SEE SECTION 412 OF THE STANDARD SPECIFICATIONS.

THE EXISTING THREE SPAN STRUCTURE WITH SPAN LENGTHS OF 15'-7", 15'-2", AND 15'-8" WITH 19 LINES OF 6x12 TIMBER JOISTS AT VARIOUS CENTERS WITH A REINFORCED CONCRETE DECK WITH A 25.4' OUT TO OUT DECK WIDTH ON TIMBER CAPS AND TIMBER PILES (ONE WITH CONCRETE COLLAR) SHALL BE REMOVED. IN ADDITION, ANY PILES REMAINING FROM PREVIOUS BRIDGE CONSTRUCTION OR MAINTENANCE OPERATIONS SHALL BE REMOVED AND INCLUDED IN THE LUMP SUM PAY ITEM FOR "REMOVAL OF EXISTING STRUCTURE AT STATION 14+78.00 -L-"

THE SUBSTRUCTURE OF THE EXISTING BRIDGE INDICATED ON THE PLANS IS FROM THE BEST INFORMATION AVAILABLE. SINCE THIS INFORMATION IS SHOWN FOR THE CONVENIENCE OF THE CONTRACTOR, THE CONTRACTOR SHALL HAVE NO CLAIM WHATSOEVER AGAINST THE DEPARTMENT OF TRANSPORTATION FOR ANY DELAYS OR ADDITIONAL COST INCURRED BASED ON DIFFERENCES BETWEEN THE EXISTING BRIDGE SUBSTRUCTURE SHOWN ON THE PLANS AND THE ACTUAL CONDITIONS AT THE PROJECT SITE.

REMOVAL OF THE EXISTING BRIDGE SHALL BE PERFORMED SO AS NOT TO ALLOW DEBRIS TO FALL INTO THE WATER. THE CONTRACTOR SHALL REMOVE THE BRIDGE AND SUBMIT PLANS FOR DEMOLITION IN ACCORDANCE WITH ARTICLE 402-2 OF THE STANDARD SPECIFICATIONS.

THIS STRUCTURE HAS BEEN DESIGNED IN ACCORDANCE WITH "HEC 18 - EVALUATING SCOUR AT BRIDGES."

FOR INTERIOR BENT, ONLY PARTIAL GALVANIZING OF THE PILES IS REQUIRED. SEE INTERIOR BENT SHEET FOR REQUIRED GALVANIZED LENGTHS. PAYMENT FOR PARTIALLY GALVANIZED PILES WILL BE MADE UNDER THE CONTRACT UNIT PRICE FOR GALVANIZED STEEL PILES.

FOR EROSION CONTROL MEASURES SEE EROSION CONTROL PLANS.

ASPHALT WEARING SURFACE IS INCLUDED IN ROADWAY QUANTITY ON ROADWAY PLANS.

FOR ASBESTOS ASSESSMENT FOR BRIDGE DEMOLITION AND RENOVATION ACTIVITIES, SEE SPECIAL PROVISIONS.

AT THE CONTRACTOR'S OPTION, PRESTRESSED CONCRETE END BENT AND BENT CAPS MAY BE SUBSTITUTED IN PLACE OF THE CAST-IN-PLACE CAPS. THE CONTRACTOR SHALL COORDINATE WITH THE RESIDENT ENGINEER TO RECEIVE REVISED PLANS AND DETAILS FROM THE STRUCTURES MANAGEMENT UNIT. THE REDESIGN AND ANY MATERIALS NEEDED WILL BE AT NO EXTRA COST TO THE CONTRACTOR.

PROJECT NO. 17BP.2.R.67

BEAUFORT COUNTY

STATION: 14+78.00 -L-

SHEET 2 OF 2

DocuSigned by: Paul J. Barber

NORTH CAROLINA PROFESSIONAL SEAL 12916 ENGINEER PAUL J. BARBER

1/24/2017

DOCUMENT NOT CONSIDERED FINAL UNLESS ALL SIGNATURES COMPLETED

HNTB NORTH CAROLINA, P.C.
NC License No. C-1554
343 E. Six Forks Rd., Suite 200, Raleigh, N.C. 27609

DRAWN BY J. BAYNE DATE 1/17
CHECKED BY P. BARBER DATE 1/17

DWG. NO. 2

STATE OF NORTH CAROLINA
DEPARTMENT OF TRANSPORTATION
RALEIGH

GENERAL DRAWING
FOR BRIDGE ON SR 1507
OVER BEAVERDAM SWAMP
BETWEEN SR 1522
AND NC HWY 32

| REVISIONS | | | | | | SHEET NO. |
|---|---|---|---|---|---|---|
| NO. | BY | DATE | NO. | BY | DATE | S-2 |
| 1 | | | 3 | | | TOTAL SHEETS |
| 2 | | | 4 | | | 17 |

# LOAD AND RESISTANCE FACTOR RATING (LRFD) SUMMARY FOR PRESTRESSED CONCRETE GIRDERS

| LEVEL | | VEHICLE | WEIGHT (W) (TONS) | CONTROLLING LOAD RATING | MINIMUM RATING FACTORS (RF) | TONS = W X RF | STRENGTH I LIMIT STATE | | | | | | | | | | | SERVICE III LIMIT STATE | | | | | | COMMENT NUMBER |
|---|---|---|---|---|---|---|---|---|---|---|---|---|---|---|---|---|---|---|---|---|---|---|---|---|
| | | | | | | | | MOMENT | | | | | SHEAR | | | | | | MOMENT | | | | | |
| | | | | | | | LIVELOAD FACTORS | DISTRIBUTION FACTORS (DF) | RATING FACTOR | SPAN | GIRDER LOCATION | DISTANCE FROM LEFT END OF SPAN (ft) | DISTRIBUTION FACTORS (DF) | RATING FACTOR | SPAN | GIRDER LOCATION | DISTANCE FROM LEFT END OF SPAN (ft) | LIVELOAD FACTORS | DISTRIBUTION FACTORS (DF) | RATING FACTOR | SPAN | GIRDER LOCATION | DISTANCE FROM LEFT END OF SPAN (ft) | |
| DESIGN LOAD RATING | | HL-93(Inv) | N/A | 1 | 1.319 | -- | 1.75 | 0.278 | 1.76 | 40' | EL | 19.5 | 0.549 | **1.32** | 40' | EL | **1.95** | 0.80 | 0.278 | 1.55 | 40' | EL | 19.5 | |
| | | HL-93(Opr) | N/A | -- | 1.709 | -- | 1.35 | 0.278 | 2.28 | 40' | EL | 19.5 | 0.549 | 1.71 | 40' | EL | 1.95 | N/A | -- | -- | -- | -- | -- | |
| | | HS-20(Inv) | 36.000 | 2 | 1.540 | 55.449 | 1.75 | 0.278 | 2.21 | 40' | EL | 19.5 | 0.549 | **1.54** | 40' | EL | **1.95** | 0.80 | 0.278 | 1.94 | 40' | EL | 19.5 | |
| | | HS-20(Opr) | 36.000 | -- | 1.997 | 71.878 | 1.35 | 0.278 | 2.86 | 40' | EL | 19.5 | 0.549 | 2 | 40' | EL | 1.95 | N/A | -- | -- | -- | -- | -- | |
| LEGAL LOAD RATING | SV | SNSH | 13.500 | -- | 3.606 | 48.687 | 1.4 | 0.278 | 5.1 | 40' | EL | 19.5 | 0.549 | 4.13 | 40' | EL | 1.95 | 0.80 | 0.278 | 3.61 | 40' | EL | 19.5 | |
| | | SNGARBS2 | 20.000 | -- | 2.964 | 59.289 | 1.4 | 0.278 | 4.19 | 40' | EL | 15.6 | 0.549 | 3.07 | 40' | EL | 1.95 | 0.80 | 0.278 | 2.96 | 40' | EL | 19.5 | |
| | | SNAGRIS2 | 22.000 | -- | 2.906 | 63.929 | 1.4 | 0.278 | 4.09 | 40' | EL | 15.6 | 0.549 | 2.91 | 40' | EL | 1.95 | 0.80 | 0.278 | 2.92 | 40' | EL | 15.6 | |
| | | SNCOTTS3 | 27.250 | -- | 1.803 | 49.125 | 1.4 | 0.278 | 2.55 | 40' | EL | 19.5 | 0.549 | 2.07 | 40' | EL | 1.95 | 0.80 | 0.278 | 1.80 | 40' | EL | 19.5 | |
| | | SNAGGRS4 | 34.925 | -- | 1.623 | 56.667 | 1.4 | 0.278 | 2.29 | 40' | EL | 19.5 | 0.549 | 1.82 | 40' | EL | 1.95 | 0.80 | 0.278 | 1.62 | 40' | EL | 19.5 | |
| | | SNS5A | 35.550 | -- | 1.578 | 56.107 | 1.4 | 0.278 | 2.23 | 40' | EL | 19.5 | 0.549 | 1.9 | 40' | EL | 1.95 | 0.80 | 0.278 | 1.58 | 40' | EL | 19.5 | |
| | | SNS6A | 39.950 | -- | 1.502 | 59.992 | 1.4 | 0.278 | 2.12 | 40' | EL | 19.5 | 0.549 | 1.77 | 40' | EL | 1.95 | 0.80 | 0.278 | 1.50 | 40' | EL | 19.5 | |
| | | SNS7B | 42.000 | 3 | 1.432 | 60.149 | 1.4 | 0.278 | 2.02 | 40' | EL | 19.5 | 0.549 | 1.81 | 40' | EL | 1.95 | 0.80 | 0.278 | **1.43** | 40' | EL | **19.5** | |
| | TTST | TNAGRIT3 | 33.000 | -- | 1.848 | 60.976 | 1.4 | 0.278 | 2.61 | 40' | EL | 19.5 | 0.549 | 2.08 | 40' | EL | 1.95 | 0.80 | 0.278 | 1.85 | 40' | EL | 19.5 | |
| | | TNT4A | 33.075 | -- | 1.872 | 61.901 | 1.4 | 0.278 | 2.65 | 40' | EL | 19.5 | 0.549 | 1.98 | 40' | EL | 1.95 | 0.80 | 0.278 | 1.87 | 40' | EL | 19.5 | |
| | | TNT6A | 41.600 | -- | 1.587 | 66.032 | 1.4 | 0.278 | 2.24 | 40' | EL | 19.5 | 0.549 | 1.94 | 40' | EL | 1.95 | 0.80 | 0.278 | 1.59 | 40' | EL | 19.5 | |
| | | TNT7A | 42.000 | -- | 1.627 | 68.354 | 1.4 | 0.278 | 2.3 | 40' | EL | 19.5 | 0.549 | 1.79 | 40' | EL | 1.95 | 0.80 | 0.278 | 1.63 | 40' | EL | 19.5 | |
| | | TNT7B | 42.000 | -- | 1.664 | 69.888 | 1.4 | 0.278 | 2.35 | 40' | EL | 19.5 | 0.549 | 1.72 | 40' | EL | 1.95 | 0.80 | 0.278 | 1.66 | 40' | EL | 19.5 | |
| | | TNAGRIT4 | 43.000 | -- | 1.619 | 69.61 | 1.4 | 0.278 | 2.28 | 40' | EL | 15.6 | 0.549 | 1.65 | 40' | EL | 1.95 | 0.80 | 0.278 | 1.62 | 40' | EL | 19.5 | |
| | | TNAGT5A | 45.000 | -- | 1.498 | 67.412 | 1.4 | 0.278 | 2.12 | 40' | EL | 19.5 | 0.549 | 1.71 | 40' | EL | 1.95 | 0.80 | 0.278 | 1.50 | 40' | EL | 19.5 | |
| | | TNAGT5B | 45.000 | -- | 1.455 | 65.486 | 1.4 | 0.278 | 2.06 | 40' | EL | 19.5 | 0.549 | 1.56 | 40' | EL | 1.95 | 0.80 | 0.278 | 1.46 | 40' | EL | 19.5 | |

## LOAD FACTORS:

| DESIGN LOAD RATING FACTORS | LIMIT STATE | $\gamma_{DC}$ | $\gamma_{DW}$ |
|---|---|---|---|
| | STRENGTH I | 1.25 | 1.50 |
| | SERVICE III | 1.00 | 1.00 |

## NOTES:

MINIMUM RATING FACTORS ARE BASED ON THE STRENGTH I AND SERVICE III LIMIT STATES.

ALLOWABLE STRESSES FOR SERVICE III LIMIT STATE ARE AS REQUIRED FOR DESIGN.

## COMMENTS:

1.
2.
3.
4.

(#) CONTROLLING LOAD RATING

(1) DESIGN LOAD RATING (HL-93)

(2) DESIGN LOAD RATING (HS-20)

(3) LEGAL LOAD RATING **

** SEE CHART FOR VEHICLE TYPE

GIRDER LOCATION

I - INTERIOR GIRDER
EL - EXTERIOR LEFT GIRDER
ER - EXTERIOR RIGHT GIRDER

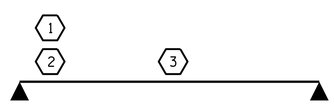


LRFR SUMMARY

FOR SPAN 'A'

PROJECT NO. 17BP.2.R.67

BEAUFORT COUNTY

STATION: 14+78.00 -L-

NORTH CAROLINA PROFESSIONAL SEAL 21271 ENGINEER GREGORY W. DICKEY

DocuSigned by: Greg Dickey
12/12/2016

DOCUMENT NOT CONSIDERED FINAL UNLESS ALL SIGNATURES COMPLETED

STATE OF NORTH CAROLINA
DEPARTMENT OF TRANSPORTATION
RALEIGH

STANDARD
LRFR SUMMARY FOR 40' CORED SLAB UNIT 90° SKEW
(NON-INTERSTATE TRAFFIC)

| REVISIONS | | | | | | SHEET NO. |
|---|---|---|---|---|---|---|
| NO. | BY: | DATE: | NO. | BY: | DATE: | S-3 |
| 1 | | | 3 | | | TOTAL SHEETS |
| 2 | | | 4 | | | 17 |

ASSEMBLED BY : G. KOUCHEKI DATE : 9/2016
CHECKED BY : P. BRYANT DATE : 11/2016
DRAWN BY : CVC 6/10
CHECKED BY : DNS 6/10

06-DEC-2016 14:29
S:\DPG1\Division2\17BP.2.R.67_Beaufort BR11\Structure\Final_Plans\17BP.2.R.67_SMU_CS.dgn
gdickey

STD. NO. 21LRFR1_90S_40L

# LOAD AND RESISTANCE FACTOR RATING (LRFD) SUMMARY FOR PRESTRESSED CONCRETE GIRDERS

| LEVEL | | VEHICLE | WEIGHT (W) (TONS) | CONTROLLING LOAD RATING | MINIMUM RATING FACTORS (RF) | TONS = W X RF | STRENGTH I LIMIT STATE | | | | | | | | | | | SERVICE III LIMIT STATE | | | | | | COMMENT NUMBER |
|---|---|---|---|---|---|---|---|---|---|---|---|---|---|---|---|---|---|---|---|---|---|---|---|---|
| | | | | | | | | MOMENT | | | | | SHEAR | | | | | | MOMENT | | | | | |
| | | | | | | | LIVELOAD FACTORS | DISTRIBUTION FACTORS (DF) | RATING FACTOR | SPAN | GIRDER LOCATION | DISTANCE FROM LEFT END OF SPAN (ft) | DISTRIBUTION FACTORS (DF) | RATING FACTOR | SPAN | GIRDER LOCATION | DISTANCE FROM LEFT END OF SPAN (ft) | LIVELOAD FACTORS | DISTRIBUTION FACTORS (DF) | RATING FACTOR | SPAN | GIRDER LOCATION | DISTANCE FROM LEFT END OF SPAN (ft) | |
| DESIGN LOAD RATING | | HL-93(Inv) | N/A | 1 | 1.037 | -- | 1.75 | 0.283 | 1.83 | 30' | EL | 14.5 | 0.574 | **1.04** | 30' | EL | **1.45** | 0.80 | 0.283 | 1.58 | 30' | EL | 14.5 | |
| | | HL-93(Opr) | N/A | -- | 1.344 | -- | 1.35 | 0.283 | 2.38 | 30' | EL | 14.5 | 0.574 | 1.34 | 30' | EL | 1.45 | N/A | -- | -- | -- | -- | -- | |
| | | HS-20(Inv) | 36.000 | 2 | 1.183 | 42.587 | 1.75 | 0.283 | 2.53 | 30' | EL | 11.6 | 0.574 | **1.18** | 30' | EL | **1.45** | 0.80 | 0.283 | 2.20 | 30' | EL | 11.6 | |
| | | HS-20(Opr) | 36.000 | -- | 1.533 | 55.205 | 1.35 | 0.283 | 3.28 | 30' | EL | 11.6 | 0.574 | 1.53 | 30' | EL | 1.45 | N/A | -- | -- | -- | -- | -- | |
| LEGAL LOAD RATING | SV | SNSH | 13.500 | -- | 2.895 | 39.081 | 1.4 | 0.283 | 5.18 | 30' | EL | 14.5 | 0.574 | 2.89 | 30' | EL | 1.45 | 0.80 | 0.283 | 3.56 | 30' | EL | 14.5 | |
| | | SNGARBS2 | 20.000 | -- | 2.240 | 44.792 | 1.4 | 0.283 | 4.53 | 30' | EL | 11.6 | 0.574 | 2.24 | 30' | EL | 1.45 | 0.80 | 0.283 | 3.15 | 30' | EL | 11.6 | |
| | | SNAGRIS2 | 22.000 | -- | 2.157 | 47.463 | 1.4 | 0.283 | 4.6 | 30' | EL | 11.6 | 0.574 | 2.16 | 30' | EL | 1.45 | 0.80 | 0.283 | 3.20 | 30' | EL | 11.6 | |
| | | SNCOTTS3 | 27.250 | -- | 1.462 | 39.849 | 1.4 | 0.283 | 2.6 | 30' | EL | 14.5 | 0.574 | 1.46 | 30' | EL | 1.45 | 0.80 | 0.283 | 1.79 | 30' | EL | 14.5 | |
| | | SNAGGRS4 | 34.925 | -- | 1.346 | 46.999 | 1.4 | 0.283 | 2.5 | 30' | EL | 14.5 | 0.574 | 1.35 | 30' | EL | 1.45 | 0.80 | 0.283 | 1.72 | 30' | EL | 14.5 | |
| | | SNS5A | 35.550 | -- | 1.427 | 50.733 | 1.4 | 0.283 | 2.42 | 30' | EL | 14.5 | 0.574 | 1.43 | 30' | EL | 1.45 | 0.80 | 0.283 | 1.67 | 30' | EL | 14.5 | |
| | | SNS6A | 39.950 | -- | 1.341 | 53.59 | 1.4 | 0.283 | 2.29 | 30' | EL | 14.5 | 0.574 | 1.34 | 30' | EL | 1.45 | 0.80 | 0.283 | 1.58 | 30' | EL | 14.5 | |
| | | SNS7B | 42.000 | -- | 1.369 | 57.505 | 1.4 | 0.283 | 2.23 | 30' | EL | 14.5 | 0.574 | 1.37 | 30' | EL | 1.45 | 0.80 | 0.283 | 1.53 | 30' | EL | 14.5 | |
| | TTST | TNAGRIT3 | 33.000 | -- | 1.593 | 52.58 | 1.4 | 0.283 | 2.97 | 30' | EL | 14.5 | 0.574 | 1.59 | 30' | EL | 1.45 | 0.80 | 0.283 | 2.04 | 30' | EL | 14.5 | |
| | | TNT4A | 33.075 | -- | 1.483 | 49.043 | 1.4 | 0.283 | 2.82 | 30' | EL | 14.5 | 0.574 | 1.48 | 30' | EL | 1.45 | 0.80 | 0.283 | 1.94 | 30' | EL | 14.5 | |
| | | TNT6A | 41.600 | -- | 1.433 | 59.622 | 1.4 | 0.283 | 2.56 | 30' | EL | 14.5 | 0.574 | 1.43 | 30' | EL | 1.45 | 0.80 | 0.283 | 1.76 | 30' | EL | 14.5 | |
| | | TNT7A | 42.000 | -- | 1.363 | 57.264 | 1.4 | 0.283 | 2.64 | 30' | EL | 14.5 | 0.574 | 1.36 | 30' | EL | 1.45 | 0.80 | 0.283 | 1.82 | 30' | EL | 14.5 | |
| | | TNT7B | 42.000 | -- | 1.331 | 55.915 | 1.4 | 0.283 | 2.49 | 30' | EL | 14.5 | 0.574 | 1.33 | 30' | EL | 1.45 | 0.80 | 0.283 | 1.72 | 30' | EL | 14.5 | |
| | | TNAGRIT4 | 43.000 | -- | 1.287 | 55.356 | 1.4 | 0.283 | 2.58 | 30' | EL | 14.5 | 0.574 | 1.29 | 30' | EL | 1.45 | 0.80 | 0.283 | 1.78 | 30' | EL | 14.5 | |
| | | TNAGT5A | 45.000 | -- | 1.381 | 62.151 | 1.4 | 0.283 | 2.5 | 30' | EL | 14.5 | 0.574 | 1.38 | 30' | EL | 1.45 | 0.80 | 0.283 | 1.72 | 30' | EL | 14.5 | |
| | | TNAGT5B | 45.000 | 3 | 1.212 | 54.54 | 1.4 | 0.283 | 2.41 | 30' | EL | 11.6 | 0.574 | **1.21** | 30' | EL | **1.45** | 0.80 | 0.283 | 1.66 | 30' | EL | 11.6 | |

## LOAD FACTORS:

| DESIGN LOAD RATING FACTORS | LIMIT STATE | $\gamma_{DC}$ | $\gamma_{DW}$ |
|---|---|---|---|
| | STRENGTH I | 1.25 | 1.50 |
| | SERVICE III | 1.00 | 1.00 |

## NOTES:

MINIMUM RATING FACTORS ARE BASED ON THE STRENGTH I AND SERVICE III LIMIT STATES.

ALLOWABLE STRESSES FOR SERVICE III LIMIT STATE ARE AS REQUIRED FOR DESIGN.

## COMMENTS:

1.
2.
3.
4.

**(#) CONTROLLING LOAD RATING**

(1) DESIGN LOAD RATING (HL-93)
(2) DESIGN LOAD RATING (HS-20)
(3) LEGAL LOAD RATING **

** SEE CHART FOR VEHICLE TYPE

**GIRDER LOCATION**

I - INTERIOR GIRDER
EL - EXTERIOR LEFT GIRDER
ER - EXTERIOR RIGHT GIRDER

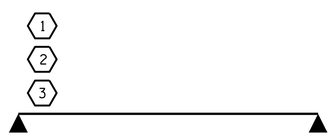


LRFR SUMMARY

FOR SPAN 'B'

PROJECT NO. 17BP.2.R.67
BEAUFORT COUNTY
STATION: 14+78.00 -L-

NORTH CAROLINA PROFESSIONAL SEAL 21271 ENGINEER GREGORY W. DICKEY

DocuSigned by: Greg Dickey
12/12/2016

DOCUMENT NOT CONSIDERED FINAL UNLESS ALL SIGNATURES COMPLETED

STATE OF NORTH CAROLINA
DEPARTMENT OF TRANSPORTATION
RALEIGH

STANDARD
LRFR SUMMARY FOR 30' CORED SLAB UNIT 90° SKEW
(NON-INTERSTATE TRAFFIC)

| REVISIONS | | | | | | SHEET NO. |
|---|---|---|---|---|---|---|
| NO. | BY: | DATE: | NO. | BY: | DATE: | S-4 |
| 1 | | | 3 | | | TOTAL SHEETS |
| 2 | | | 4 | | | 17 |

| | |
|---|---|
| ASSEMBLED BY : G. KOUCHEKI | DATE : 9/2016 |
| CHECKED BY : P. BRYANT | DATE : 11/2016 |
| DRAWN BY : CVC 6/10 | |
| CHECKED BY : DNS 6/10 | |

06-DEC-2016 14:29
S:\DPG1\Division2\17BP.2.R.67_Beaufort BR11\Structure\Final_Plans\17BP.2.R.67_SMU_CS.dgn
gdickey

STD. NO. 21LRFR1_90S_30L

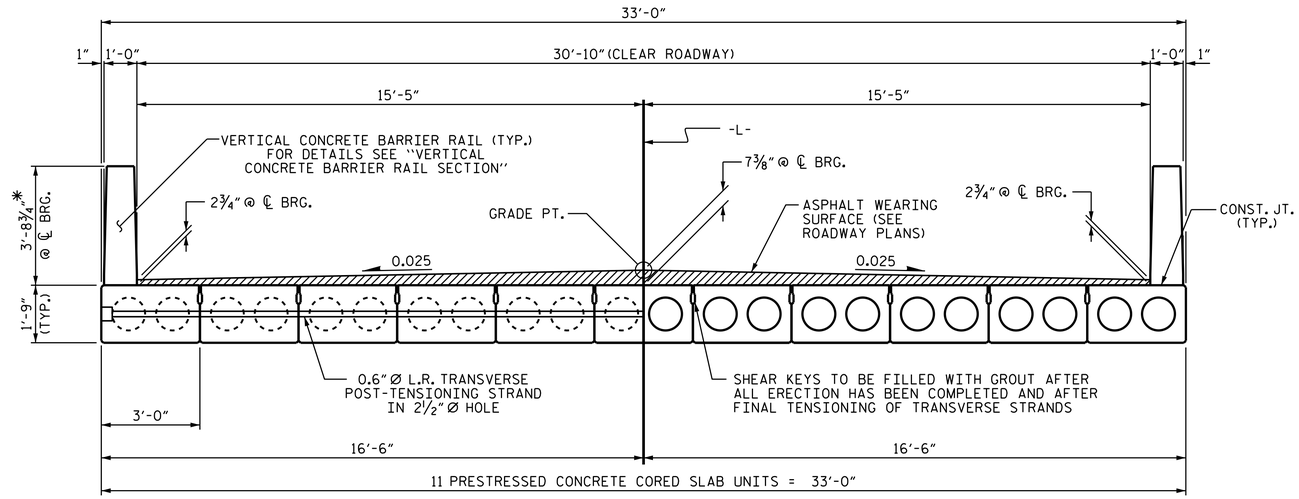


HALF SECTION
AT INTERMEDIATE DIAPHRAGMS

HALF SECTION
THROUGH VOIDS

## TYPICAL SECTION

* - THE MAXIMUM BARRIER RAIL HEIGHT AND ASPHALT THICKNESS IS SHOWN. THE HEIGHT OF THE BARRIER RAIL AND ASPHALT THICKNESS VARIES WHILE THE TOP OF THE BARRIER RAIL FOLLOWS THE PROFILE OF THE GUTTERLINE. FOR RAIL HEIGHT DETAILS AND ASPHALT THICKNESS SEE THE "VERTICAL CONCRETE BARRIER RAIL SECTION" DETAIL.

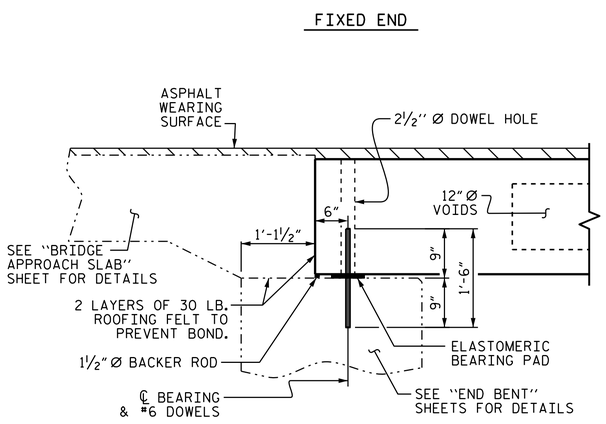


## SECTION AT END BENT

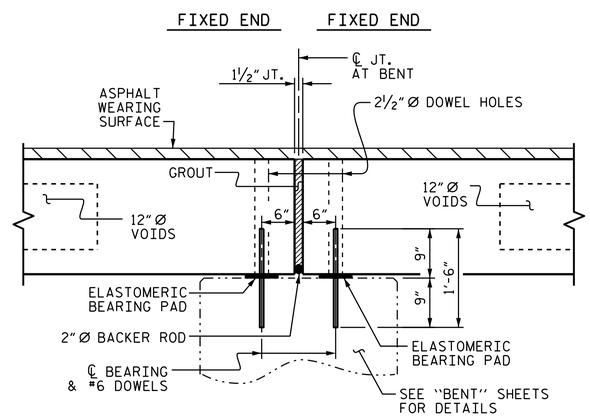


## SECTION AT BENT

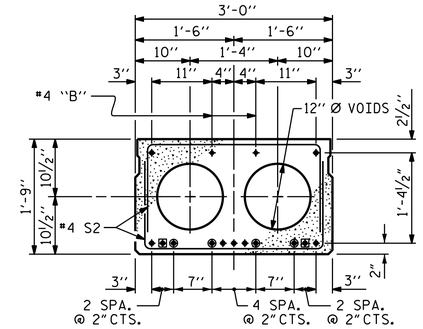


## INTERIOR SLAB SECTION ( 30' UNIT)

(9 STRANDS REQUIRED)

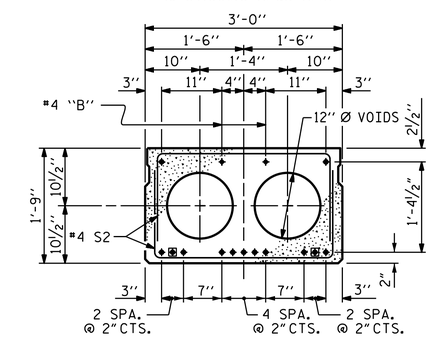


## INTERIOR SLAB SECTION (40' UNIT)

(13 STRANDS REQUIRED)

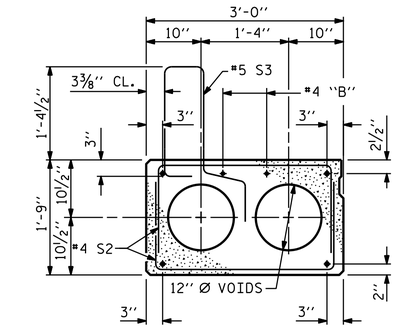


## EXT. SLAB SECTION

(FOR PRESTRESSED STRAND LAYOUT, SEE INTERIOR SLAB SECTION.)

◉ BOND SHALL BE BROKEN ON THESE STRANDS FOR A DISTANCE OF 2'-0" FROM END OF CORED SLAB UNIT. SEE STANDARD SPECIFICATIONS, ARTICLE 1078-7.

◉ OPTIONAL FULL LENGTH DEBONDED STRANDS. THESE STRANDS ARE NOT REQUIRED. IF THE FABRICATOR CHOOSES TO INCLUDE THESE STRANDS IN THE CORED SLAB UNIT, THE STRANDS SHALL BE DEBONDED FOR THE FULL LENGTH OF THE UNIT AT NO ADDITIONAL COST. SEE STANDARD SPECIFICATIONS, ARTICLE 1078-7.

## DEBONDING LEGEND

PERMITTED THREADED INSERT CAST IN OUTSIDE FACE OF EXTERIOR UNIT AND RECESSED ⅜". SIZE TO BE DETERMINED BY CONTRACTOR.

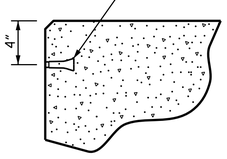


THREADED INSERT DETAIL

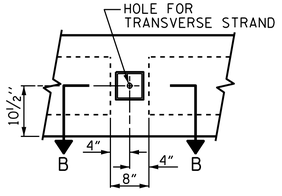


ELEVATION VIEW

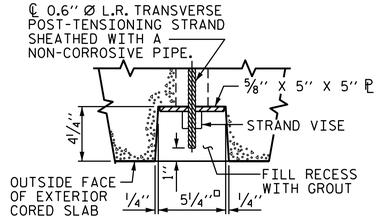


SECTION B-B

## GROUTED RECESS AT END OF POST-TENSIONED STRAND OF CORED SLABS

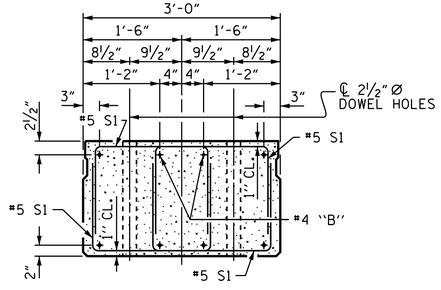


## END ELEVATION

SHOWING PLACEMENT OF DOUBLE STIRRUPS AND LOCATION OF DOWEL HOLES. (STRAND LAYOUT NOT SHOWN.) INTERIOR SLAB UNIT SHOWN-EXTERIOR SLAB UNIT SIMILAR EXCEPT SHEAR KEY LOCATION.

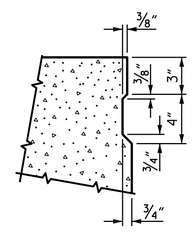


## SHEAR KEY DETAIL

NOTE: OMIT SHEAR KEY ON OUTSIDE FACE OF EXTERIOR CORED SLABS.

PROJECT NO. 17BP.2.R.67
BEAUFORT COUNTY
STATION: 14+78.00 -L-

SHEET 1 OF 4

STATE OF NORTH CAROLINA
DEPARTMENT OF TRANSPORTATION
RALEIGH

STANDARD
3'-0" X 1'-9"
PRESTRESSED CONCRETE CORED SLAB UNIT
90° SKEW

NORTH CAROLINA PROFESSIONAL SEAL 21271 ENGINEER GREGORY W. DICKEY

DocuSigned by: Greg Dickey
884E4E88CE5B4B6...
12/12/2016

DOCUMENT NOT CONSIDERED FINAL UNLESS ALL SIGNATURES COMPLETED

| REVISIONS | | | | | | | | SHEET NO. |
|---|---|---|---|---|---|---|---|---|
| NO. | BY: | DATE: | NO. | BY: | DATE: | | | S-5 |
| 1 | | | 3 | | | | | TOTAL SHEETS |
| 2 | | | 4 | | | | | 17 |

| | | | |
|---|---|---|---|
| ASSEMBLED BY : G. KOUCHEKI | DATE : 9/2016 | | |
| CHECKED BY : P. BRYANT | DATE : 11/2016 | | |
| DRAWN BY : DGE 5/09 | REV. 9/14 | MAA/TMG | |
| CHECKED BY : BCH 6/09 | | | |

06-DEC-2016 14:30
S:\DPG1\Division2\17BP.2.R.67_Beaufort BRII\Structure\Final_Plans\17BP.2.R.67_SMU_CS.dgn
gdickey

STD. NO. 21" PCS2_33_90S

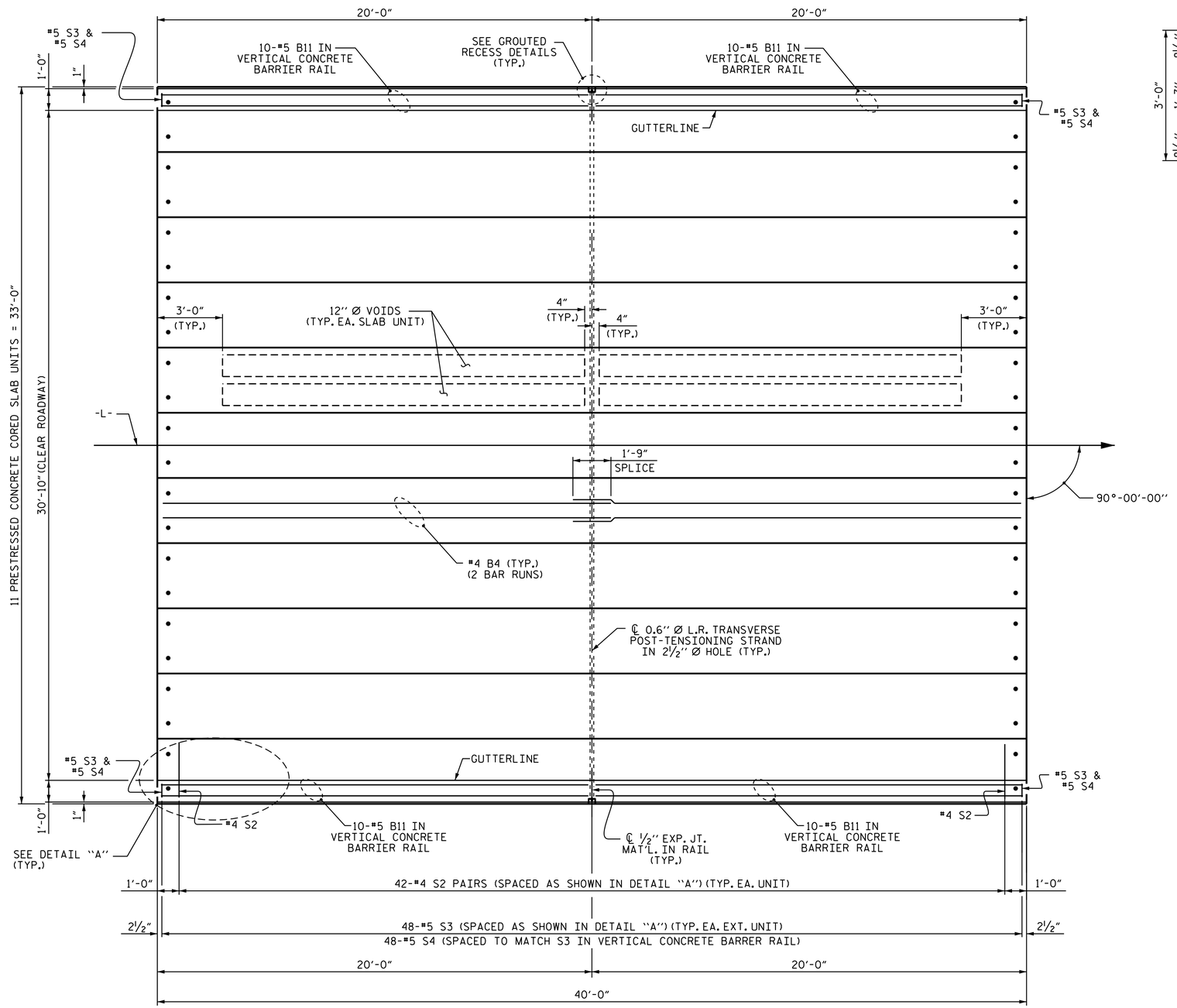


## PLAN OF UNIT

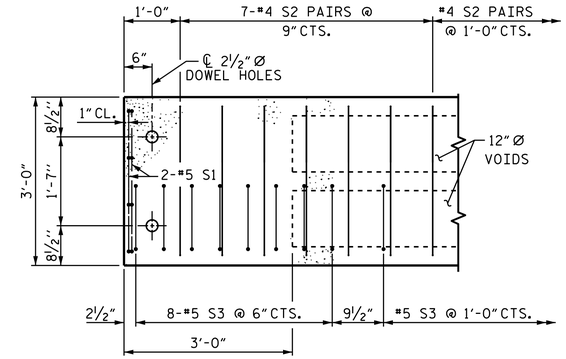


## DETAIL "A"

(TYPICAL EACH END OF UNIT)
NOTE: EXTERIOR UNIT SHOWN - INTERIOR UNIT SIMILAR EXCEPT OMIT #5 S3 BARS.

PROJECT NO. 17BP.2.R.67
BEAUFORT COUNTY
STATION: 14+78.00 -L-

SHEET 2 OF 4

STATE OF NORTH CAROLINA
DEPARTMENT OF TRANSPORTATION
RALEIGH

# PLAN OF 40' UNIT 30'-10" CLEAR ROADWAY 90° SKEW

NORTH CAROLINA PROFESSIONAL SEAL 21271 ENGINEER GREGORY W. DICKEY

DocuSigned by: Greg Dickey
12/12/2016

DOCUMENT NOT CONSIDERED FINAL UNLESS ALL SIGNATURES COMPLETED

| REVISIONS | | | | | | SHEET NO. |
|---|---|---|---|---|---|---|
| NO. | BY: | DATE: | NO. | BY: | DATE: | S-6 |
| 1 | | | 3 | | | TOTAL SHEETS |
| 2 | | | 4 | | | 17 |

| | | | |
|---|---|---|---|
| ASSEMBLED BY : G. KOUCHEKI | | DATE : 9/2016 | |
| CHECKED BY : P. BRYANT | | DATE : 11/2016 | |
| DRAWN BY : DGE 3/09 | REV. 12/5/11 | MAA/AAC | |
| CHECKED BY : BCH 3/09 | REV. 8/14 | MAA/TMG | |

06-DEC-2016 14:30
S:\DPGI\Division2\17BP.2.R.67_Beaufort BR11\Structure\Final_Plans\17BP.2.R.67_SMU_CS.dgn
gdickey

STD. NO. 21" PCS_33_90S_40L

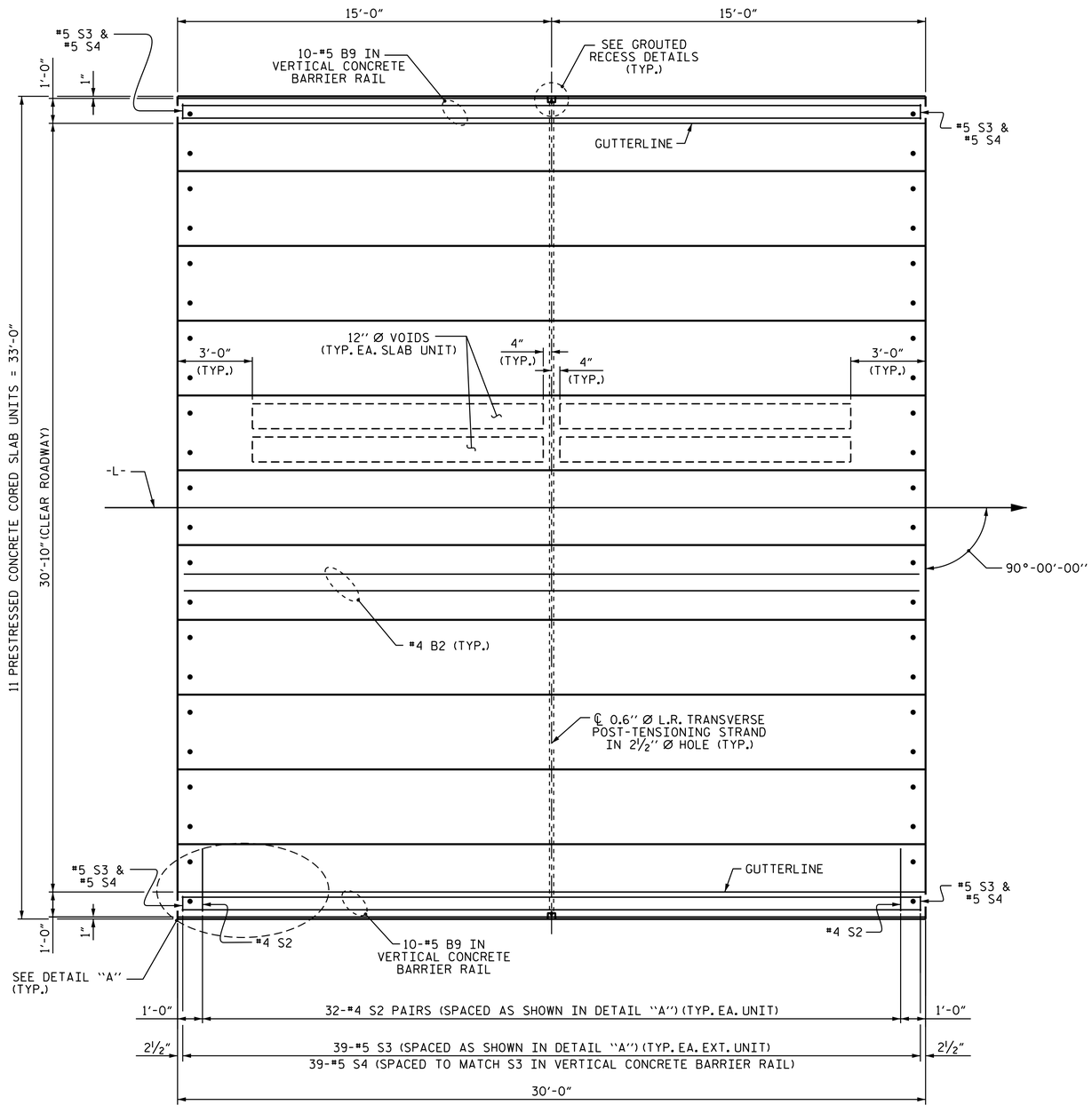


PLAN OF UNIT

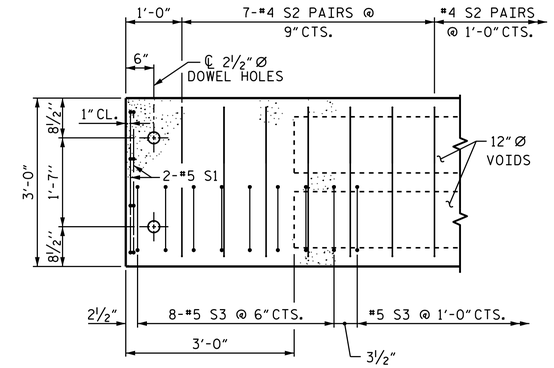


DETAIL "A"

(TYPICAL EACH END OF UNIT)
NOTE: EXTERIOR UNIT SHOWN - INTERIOR UNIT SIMILAR EXCEPT OMIT #5 S3 BARS.

PROJECT NO. 17BP.2.R.67
BEAUFORT COUNTY
STATION: 14+78.00 -L-

SHEET 3 OF 4

STATE OF NORTH CAROLINA
DEPARTMENT OF TRANSPORTATION
RALEIGH

PLAN OF 30' UNIT
30'-10" CLEAR ROADWAY
90° SKEW

NORTH CAROLINA PROFESSIONAL SEAL 21271 ENGINEER GREGORY W. DICKEY

DocuSigned by: Greg Dickey
BA6E4B9BCE5B4B6...
12/12/2016

DOCUMENT NOT CONSIDERED FINAL UNLESS ALL SIGNATURES COMPLETED

| REVISIONS | | | | | | SHEET NO. |
|---|---|---|---|---|---|---|
| NO. | BY: | DATE: | NO. | BY: | DATE: | S-7 |
| 1 | | | 3 | | | TOTAL SHEETS |
| 2 | | | 4 | | | 17 |

| | | | |
|---|---|---|---|
| ASSEMBLED BY : G. KOUCHEKI | | DATE : 9/2016 | |
| CHECKED BY : P. BRYANT | | DATE : 11/2016 | |
| DRAWN BY : DGE 3/09 | REV. 12/5/11 | MAA/AAC | |
| CHECKED BY : BCH 3/09 | REV. 8/14 | MAA/TMG | |

06-DEC-2016 14:30
S:\DPGI\Division2\17BP.2.R.67_Beaufort BRII\Structure\Final_Plans\17BP.2.R.67_SMU_CS.dgn
gdickey

STD. NO. 21" PCS_33_90S_30L

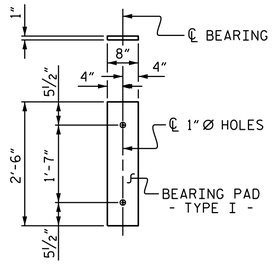


FIXED END
( TYPE I - 44 REQ'D )

# ELASTOMERIC BEARING DETAILS

ELASTOMER IN ALL BEARINGS SHALL BE 50 DUROMETER HARDNESS.

## DEAD LOAD DEFLECTION AND CAMBER

| | 3'-0" x 1'-9" |
|---|---|
| 30' CORED SLAB UNIT | 0.6" Ø L.R. STRAND |
| CAMBER ( SLAB ALONE IN PLACE ) | ¼" ↑ |
| DEFLECTION DUE TO SUPERIMPOSED DEAD LOAD** | ⅛" ↓ |
| FINAL CAMBER | ⅛" ↑ |

** INCLUDES FUTURE WEARING SURFACE

## CORED SLABS REQUIRED

| | NUMBER | LENGTH | TOTAL LENGTH |
|---|---|---|---|
| 40' UNIT | | | |
| EXTERIOR C.S. | 2 | 40'-0" | 80'-0" |
| INTERIOR C.S. | 9 | 40'-0" | 360'-0" |
| TOTAL | 11 | | 440'-0" |

## DEAD LOAD DEFLECTION AND CAMBER

| | 3'-0" x 1'-9" |
|---|---|
| 40' CORED SLAB UNIT | 0.6" Ø L.R. STRAND |
| CAMBER ( SLAB ALONE IN PLACE ) | ⅞" ↑ |
| DEFLECTION DUE TO SUPERIMPOSED DEAD LOAD** | ⅛" ↓ |
| FINAL CAMBER | ¾" ↑ |

** INCLUDES FUTURE WEARING SURFACE

## BILL OF MATERIAL FOR ONE 30' CORED SLAB UNIT

| | | | | EXTERIOR UNIT | | INTERIOR UNIT | |
|---|---|---|---|---|---|---|---|
| BAR | NUMBER | SIZE | TYPE | LENGTH | WEIGHT | LENGTH | WEIGHT |
| B2 | 2 | #4 | STR | 29'-8" | 40 | 29'-8" | 40 |
| S1 | 8 | #5 | 3 | 4'-3" | 35 | 4'-3" | 35 |
| S2 | 64 | #4 | 3 | 5'-4" | 228 | 5'-4" | 228 |
| * S3 | 39 | #5 | 1 | 5'-7" | 227 | | |
| REINFORCING STEEL | | | LBS. | | 303 | | 303 |
| * EPOXY COATED REINFORCING STEEL | | | LBS. | | 227 | | |
| 5000 P.S.I. CONCRETE | | | CU. YDS. | | 4.4 | | 4.4 |
| 0.6" Ø L.R. STRANDS | | | No. | | 9 | | 9 |

## BILL OF MATERIAL FOR ONE 40' CORED SLAB UNIT

| | | | | EXTERIOR UNIT | | INTERIOR UNIT | |
|---|---|---|---|---|---|---|---|
| BAR | NUMBER | SIZE | TYPE | LENGTH | WEIGHT | LENGTH | WEIGHT |
| B4 | 4 | #4 | STR | 20'-9" | 55 | 20'-9" | 55 |
| S1 | 8 | #5 | 3 | 4'-3" | 35 | 4'-3" | 35 |
| S2 | 84 | #4 | 3 | 5'-4" | 299 | 5'-4" | 299 |
| * S3 | 48 | #5 | 1 | 5'-7" | 280 | | |
| REINFORCING STEEL | | | LBS. | | 389 | | 389 |
| * EPOXY COATED REINFORCING STEEL | | | LBS. | | 280 | | |
| 5000 P.S.I. CONCRETE | | | CU. YDS. | | 5.8 | | 5.8 |
| 0.6" Ø L.R. STRANDS | | | No. | | 13 | | 13 |

## BAR TYPES

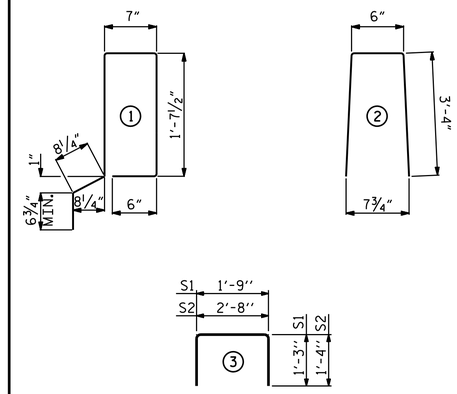


ALL BAR DIMENSIONS ARE OUT TO OUT

## CORED SLABS REQUIRED

| | NUMBER | LENGTH | TOTAL LENGTH |
|---|---|---|---|
| 30' UNIT | | | |
| EXTERIOR C.S. | 2 | 30'-0" | 60'-0" |
| INTERIOR C.S. | 9 | 30'-0" | 270'-0" |
| TOTAL | 11 | | 330'-0" |

## BILL OF MATERIAL FOR VERTICAL CONCRETE BARRIER RAIL

| BAR | BARS PER PAIR OF EXTERIOR UNITS | TOTAL NO. | SIZE | TYPE | LENGTH | WEIGHT |
|---|---|---|---|---|---|---|
| | 30' UNIT | | | | | |
| * B9 | 20 | 20 | #5 | STR | 29'-7" | 617 |
| * S4 | 78 | 78 | #5 | 2 | 7'-2" | 583 |
| * EPOXY COATED REINFORCING STEEL | | | | LBS. | | 1200 |
| CLASS AA CONCRETE | | | | CU.YDS. | | 7.7 |
| TOTAL VERTICAL CONCRETE BARRIER RAIL | | | | LN. FT. | | 60.25 |

## BILL OF MATERIAL FOR VERTICAL CONCRETE BARRIER RAIL

| BAR | BARS PER PAIR OF EXTERIOR UNITS | TOTAL NO. | SIZE | TYPE | LENGTH | WEIGHT |
|---|---|---|---|---|---|---|
| | 40' UNIT | | | | | |
| * B11 | 40 | 40 | #5 | STR | 19'-7" | 817 |
| * S4 | 96 | 96 | #5 | 2 | 7'-2" | 718 |
| * EPOXY COATED REINFORCING STEEL | | | | LBS. | | 1535 |
| CLASS AA CONCRETE | | | | CU.YDS. | | 10.2 |
| TOTAL VERTICAL CONCRETE BARRIER RAIL | | | | LN. FT. | | 80.25 |

## NOTES

ALL PRESTRESSING STRANDS SHALL BE 7-WIRE LOW RELAXATION GRADE 270 STRANDS AND SHALL CONFORM TO AASHTO M203 EXCEPT FOR SAMPLING REQUIREMENTS WHICH SHALL BE IN ACCORDANCE WITH THE STANDARD SPECIFICATIONS.

ALL REINFORCING STEEL CAST WITH THE CORED SLAB SECTIONS SHALL BE GRADE 60 AND SHALL BE INCLUDED IN THE UNIT PRICE BID FOR PRESTRESSED CONCRETE CORED SLABS.

RECESSES FOR TRANSVERSE STRANDS SHALL BE GROUTED AFTER THE TENSIONING OF THE STRANDS.

THE 2½" Ø DOWEL HOLES AT FIXED ENDS OF SLAB SECTIONS SHALL BE FILLED WITH NON-SHRINK GROUT.

THE BACKER RODS SHALL CONFORM TO THE REQUIREMENTS OF TYPE M BOND BREAKER. SEE SECTION 1028 OF THE STANDARD SPECIFICATIONS.

WHEN CORED SLABS ARE CAST, AN INTERNAL HOLD-DOWN SYSTEM SHALL BE EMPLOYED TO PREVENT VOIDS FROM RISING OR MOVING SIDEWAYS. AT LEAST SIX WEEKS PRIOR TO CASTING CORED SLABS, THE CONTRACTOR SHALL SUBMIT TO THE ENGINEER FOR REVIEW AND COMMENT, DETAILED DRAWINGS OF THE PROPOSED HOLD-DOWN SYSTEM. IN ADDITION TO STRUCTURAL DETAILS, LOCATION AND SPACING OF THE HOLD-DOWNS SHALL BE INDICATED.

ALL REINFORCING STEEL IN THE VERTICAL CONCRETE BARRIER RAIL SHALL BE EPOXY COATED.

PRESTRESSING STRANDS SHALL BE CUT FLUSH WITH THE CORED SLAB UNIT ENDS.

APPLY EPOXY PROTECTIVE COATING TO CORED SLAB UNIT ENDS.

GROOVED CONTRACTION JOINTS, ½" IN DEPTH, SHALL BE TOOLED IN ALL EXPOSED FACES OF THE BARRIER RAIL AND IN ACCORDANCE WITH ARTICLE 825-10(B) OF THE STANDARD SPECIFICATIONS. A CONTRACTION JOINT SHALL BE LOCATED AT EACH THIRD POINT BETWEEN BARRIER RAIL EXPANSION JOINTS. ONLY ONE CONTRACTION JOINT IS REQUIRED AT MIDPOINT OF BARRIER RAIL SEGMENTS LESS THAN 20 FEET IN LENGTH AND NO CONTRACTION JOINTS ARE REQUIRED FOR THOSE SEGMENTS LESS THAN 10 FEET IN LENGTH.

FLAME CUTTING OF THE TRANSVERSE POST-TENSIONING STRAND IS NOT ALLOWED.

THE TRANSFER OF LOAD FROM THE ANCHORAGES TO THE CORED SLAB UNIT SHALL BE DONE WHEN THE CONCRETE HAS REACHED A COMPRESSIVE STRENGTH OF NOT LESS THAN THE REQUIRED STRENGTH SHOWN IN THE "CONCRETE RELEASE STRENGTH" TABLE.

FOR GROUT FOR STRUCTURES, SEE SPECIAL PROVISIONS.

THE PERMITTED THREADED INSERTS ARE DETAILED AS AN OPTION FOR THE CONTRACTOR TO ATTACH FALSEWORK AND FORMWORK DURING CONSTRUCTION.

THE PERMITTED THREADED INSERTS IN THE EXTERIOR UNITS SHALL BE SIZED BY THE CONTRACTOR, SPACED AT 4'-0" CENTERS AND GALVANIZED IN ACCORDANCE WITH SECTION 1076 OF THE STANDARD SPECIFICATIONS. STAINLESS STEEL THREADED INSERTS MAY BE USED AS AN ALTERNATE.

THE PERMITTED THREADED INSERTS SHALL BE GROUTED BY THE CONTRACTOR IMMEDIATELY FOLLOWING REMOVAL OF THE FALSEWORK.

THE COST OF THE PERMITTED THREADED INSERTS SHALL BE INCLUDED IN THE PRICE BID FOR THE PRECAST UNITS.

## GUTTERLINE ASPHALT THICKNESS & RAIL HEIGHT

| | ASPHALT OVERLAY THICKNESS | RAIL HEIGHT |
|---|---|---|
| | @ MID-SPAN | @ MID-SPAN |
| 30' UNITS | 2⅝" | 3'-8⅝" |
| 40' UNITS | 2" | 3'-8" |

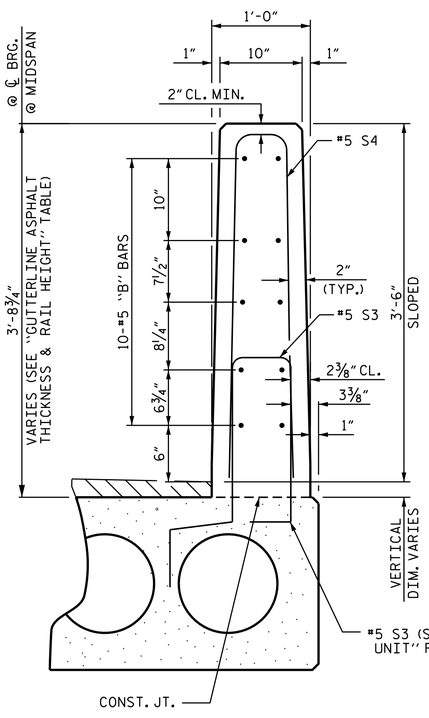


VERTICAL CONCRETE BARRIER RAIL SECTION

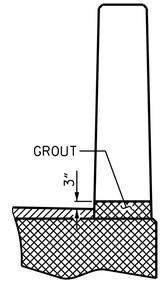


SECTION T-T
AT OPEN JOINT AT BENT
(THIS IS TO BE USED WHERE FOAM JOINT IS NOT USED)

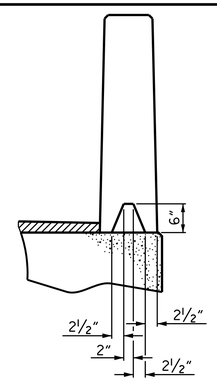


SECTION S-S
AT DAM IN OPEN JOINT
(THIS IS TO BE USED ONLY WHEN SLIP FORM IS USED)

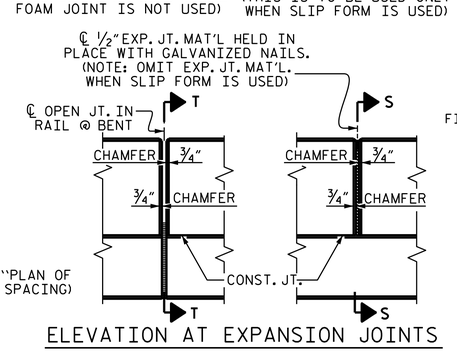


ELEVATION AT EXPANSION JOINTS

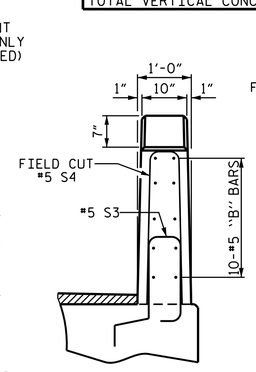


END VIEW

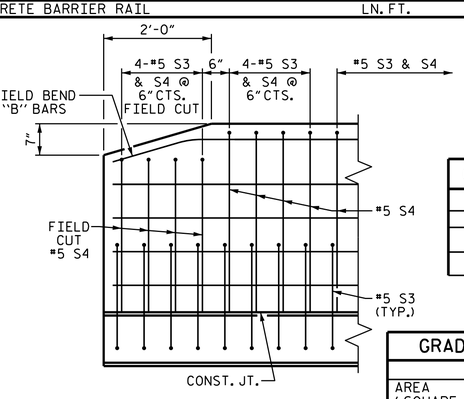


SIDE VIEW

END OF RAIL DETAILS

## CONCRETE RELEASE STRENGTH

| | |
|---|---|
| UNIT | PSI |
| 30' UNITS | 4000 |
| 40' UNITS | 4000 |

## GRADE 270 STRANDS

| | 0.6" Ø L.R. |
|---|---|
| AREA ( SQUARE INCHES ) | 0.217 |
| ULTIMATE STRENGTH ( LBS. PER STRAND ) | 58,600 |
| APPLIED PRESTRESS ( LBS. PER STRAND ) | 43,950 |

NORTH CAROLINA PROFESSIONAL SEAL 21271 ENGINEER GREGORY W. DICKEY

DocuSigned by: Greg Dickey
BB4E4486C5B4B6...
12/12/2016

DOCUMENT NOT CONSIDERED FINAL UNLESS ALL SIGNATURES COMPLETED

PROJECT NO. 17BP.2.R.67
BEAUFORT COUNTY
STATION: 14+78.00 -L-

SHEET 4 OF 4

STATE OF NORTH CAROLINA
DEPARTMENT OF TRANSPORTATION
RALEIGH

STANDARD
3'-0" X 1'-9"
PRESTRESSED CONCRETE
CORED SLAB UNIT
90° SKEW

| REVISIONS | | | | | | | | SHEET NO. |
|---|---|---|---|---|---|---|---|---|
| NO. | BY: | DATE: | NO. | BY: | DATE: | | | S-8 |
| 1 | | | 3 | | | | | TOTAL SHEETS |
| 2 | | | 4 | | | | | 17 |

| | |
|---|---|
| ASSEMBLED BY : G. KOUCHEKI | DATE : 9/2016 |
| CHECKED BY : P. BRYANT | DATE : 11/2016 |
| DRAWN BY : DGE 5/09 | REV. 11/14 MAA/TMG |
| CHECKED BY : BCH 6/09 | |

06-DEC-2016 14:30
S:\DPGI\Division2\17BP.2.R.67_Beaufort BR11\Structure\Final_Plans\17BP.2.R.67_SMU_CS.dgn
gdickey

STD. NO. 21" PCS3_33_90S

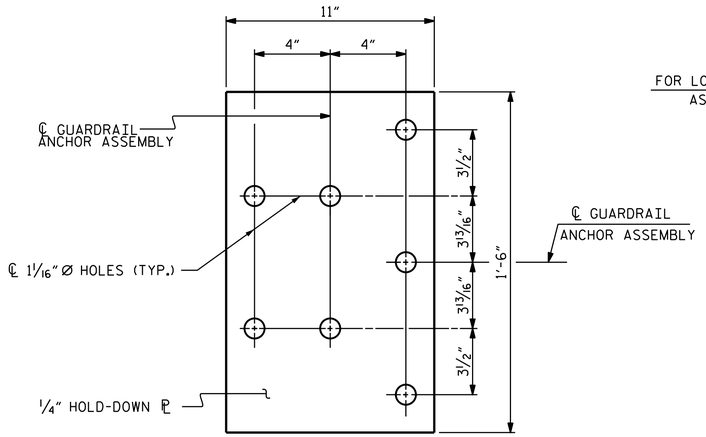


PLAN

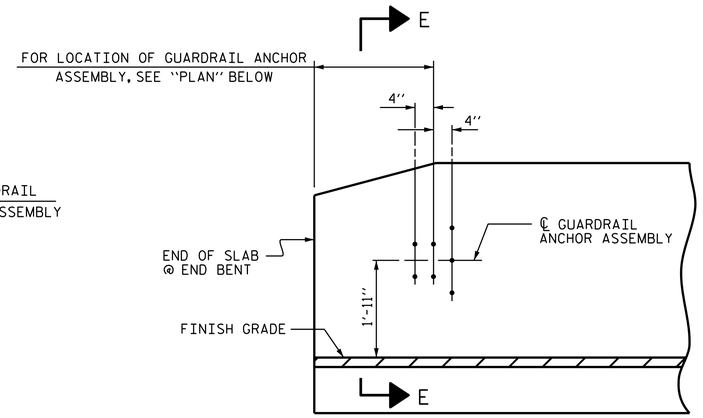


ELEVATION

## NOTES

THE GUARDRAIL ANCHOR ASSEMBLY SHALL CONSIST OF A 1/4" HOLD DOWN PLATE AND 7 - 7/8" Ø BOLTS WITH NUTS AND WASHERS.

THE HOLD-DOWN PLATE SHALL CONFORM TO AASHTO M270 GRADE 36. AFTER FABRICATION, THE HOLD-DOWN PLATE SHALL BE HOT-DIP GALVANIZED IN ACCORDANCE WITH AASHTO M111.

BOLTS SHALL CONFORM TO THE REQUIREMENTS OF ASTM A307 AND NUTS SHALL CONFORM TO THE REQUIREMENTS OF AASHTO M291. BOLTS, NUTS AND WASHERS SHALL BE GALVANIZED. (AT THE CONTRACTOR'S OPTION, STAINLESS STEEL BOLTS, NUTS AND WASHERS MAY BE USED AS AN ALTERNATE FOR THE 7/8" Ø GALVANIZED BOLTS, NUTS AND WASHERS. THEY SHALL CONFORM TO OR EXCEED THE MECHANICAL REQUIREMENTS OF ASTM A307. THE USE OF THIS ALTERNATE SHALL BE APPROVED BY THE ENGINEER.)

THE GUARDRAIL ANCHOR ASSEMBLY IS REQUIRED AT ALL POINTS WHERE APPROACH GUARDRAIL IS TO BE ATTACHED TO THE END OF BARRIER RAIL. FOR POINTS OF ATTACHMENT, SEE SKETCH.

AFTER INSTALLATION, THE EXPOSED THREAD OF THE BOLT SHALL BE BURRED WITH A SHARP POINTED TOOL.

THE COST OF THE GUARDRAIL ANCHOR ASSEMBLY SHALL BE INCLUDED IN THE UNIT CONTRACT PRICE BID FOR VERTICAL CONCRETE BARRIER RAIL.

THE VERTICAL REINFORCING BARS MAY BE SHIFTED SLIGHTLY IN THE VERTICAL CONCRETE BARRIER RAIL TO CLEAR ASSEMBLY BOLTS.

THE 1 1/4" Ø HOLES SHALL BE FORMED OR DRILLED WITH A CORE BIT. IMPACT TOOLS WILL NOT BE PERMITTED. ANY CONCRETE DAMAGED BY THIS WORK SHALL BE REPAIRED TO THE SATISFACTION OF THE ENGINEER.

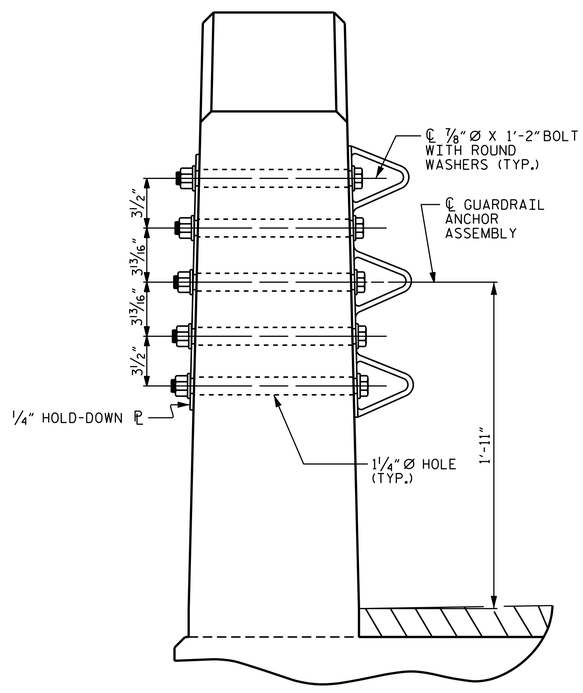


SECTION E-E

## GUARDRAIL ANCHOR ASSEMBLY DETAILS

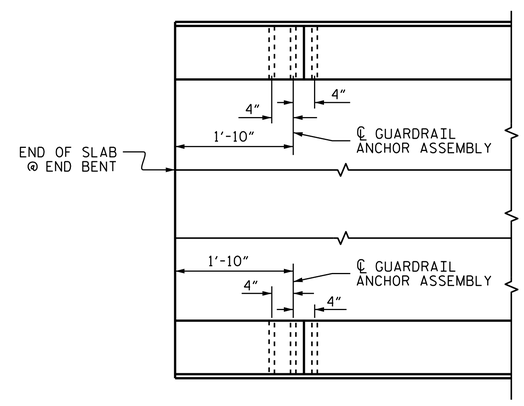


PLAN

## LOCATION OF ANCHORS FOR GUARDRAIL

END BENT #1 SHOWN, END BENT #2 SIMILAR.

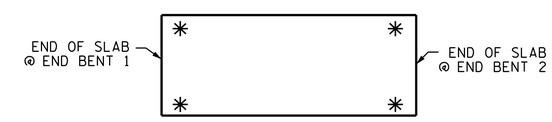


## SKETCH SHOWING POINTS OF ATTACHMENT

✳ DENOTES GUARDRAIL ANCHOR ASSEMBLY

PROJECT NO. 17BP.2.R.67

BEAUFORT COUNTY

STATION: 14+78.00 -L-

STATE OF NORTH CAROLINA
DEPARTMENT OF TRANSPORTATION
RALEIGH

STANDARD
GUARDRAIL ANCHORAGE DETAILS
FOR VERTICAL CONCRETE BARRIER RAIL

NORTH CAROLINA PROFESSIONAL SEAL 21271 ENGINEER GREGORY W. DICKEY

DocuSigned by: Greg Dickey
12/12/2016

| | | | |
|---|---|---|---|
| ASSEMBLED BY : G. KOUCHEKI | DATE : 9/2016 | | |
| CHECKED BY : P. BRYANT | DATE : 11/2016 | | |
| DRAWN BY : MAA 5/10 | REV. 12/5/11 | MAA/GM | |
| CHECKED BY : GM 5/10 | REV. 6/13 | MAA/GM | |
| | REV. 1/15 | MAA/TMG | |

DOCUMENT NOT CONSIDERED FINAL UNLESS ALL SIGNATURES COMPLETED

| REVISIONS | | | | | | SHEET NO. |
|---|---|---|---|---|---|---|
| NO. | BY: | DATE: | NO. | BY: | DATE: | S-9 |
| 1 | | | 3 | | | TOTAL SHEETS |
| 2 | | | 4 | | | 17 |

STD. NO. GRA3

06-DEC-2016 14:30
S:\DPGI\Division2\17BP.2.R.67_Beaufort BRII\Structure\Final_Plans\17BP.2.R.67_SMU_CS.dgn
gdickey

## NOTES

STIRRUPS IN CAP MAY BE SHIFTED AS NECESSARY TO CLEAR DOWELS.

THE CONCRETE IN THE SHADED AREA OF THE WING SHALL BE POURED AFTER THE VERTICAL CONCRETE BARRIER RAIL IS CAST IF SLIP FORMING IS USED.

FOR PILE SPLICE DETAILS, SEE SHEET 4 OF 4.

FOR WING DETAILS, SEE SHEET 3 OF 4.

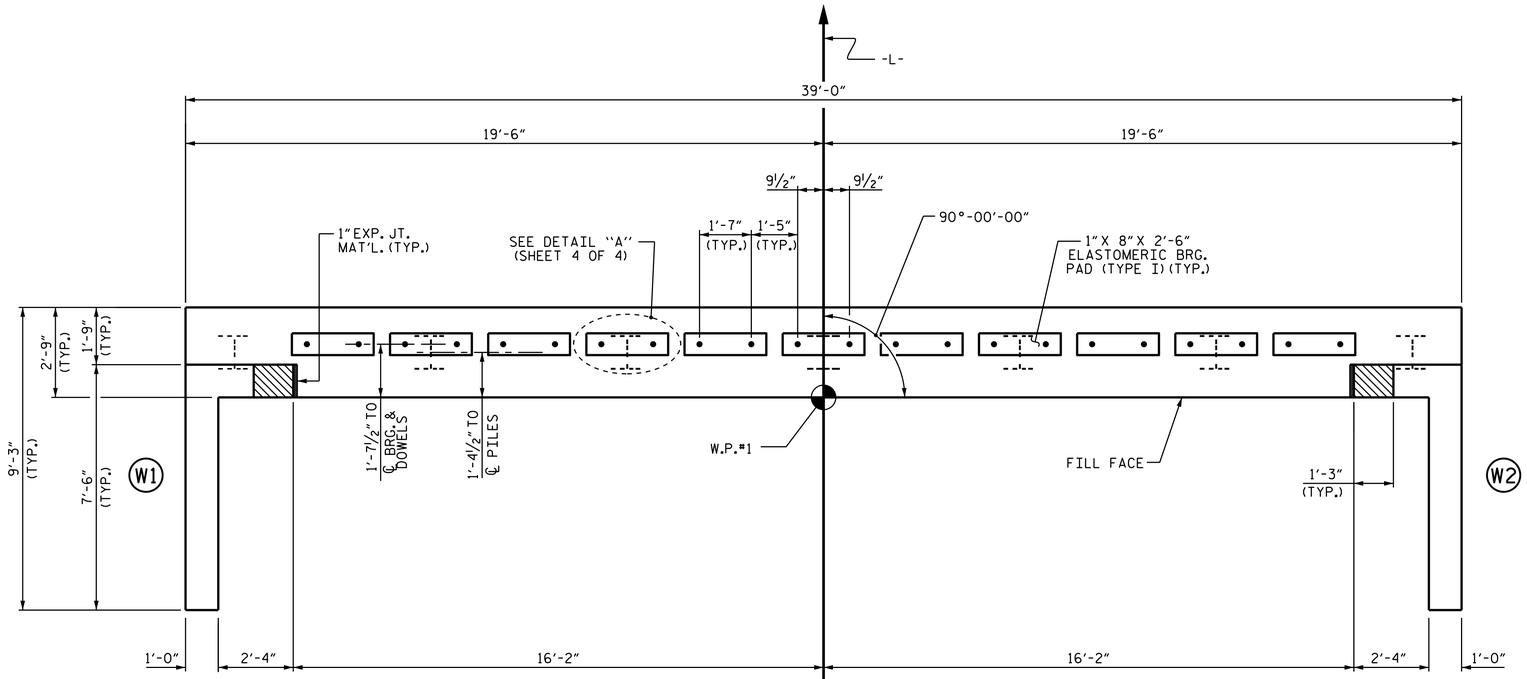


## PLAN

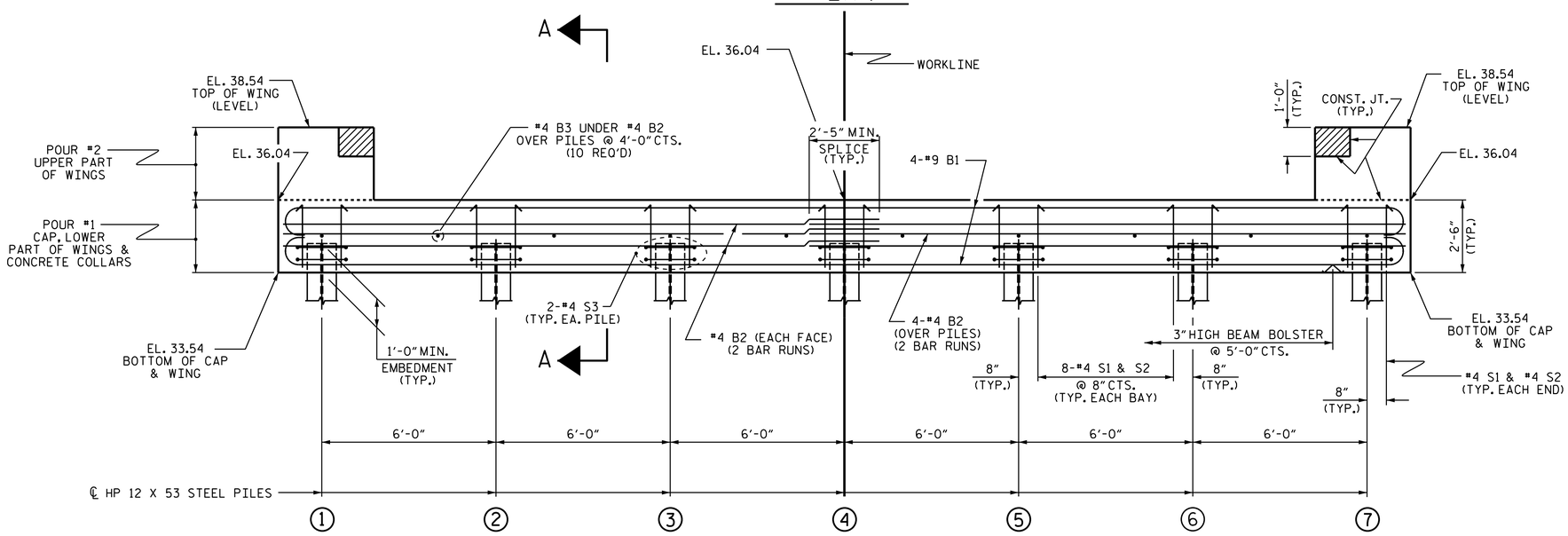


## ELEVATION

WINGS NOT SHOWN FOR CLARITY.
FOR SECTION A-A, SEE SHEET 4 OF 4.
CONCRETE COLLARS FOR STEEL PILES NOT SHOWN IN PLAN AND ELEVATION VIEWS FOR CLARITY.
SEE "CORROSION PROTECTION FOR STEEL PILES DETAIL", SHEET 4 OF 4.

PROJECT NO. 17BP.2.R.67
BEAUFORT COUNTY
STATION: 14+78.00 -L-

SHEET 1 OF 4

STATE OF NORTH CAROLINA
DEPARTMENT OF TRANSPORTATION
RALEIGH

SUBSTRUCTURE

END BENT No. 1

NORTH CAROLINA PROFESSIONAL SEAL 21271 ENGINEER GREGORY W. DICKEY

DocuSigned by: Greg Dickey
12/12/2016

| | | | |
|---|---|---|---|
| ASSEMBLED BY : G. KOUCHEKI | DATE : 9/2016 | | |
| CHECKED BY : P. BRYANT | DATE : 11/2016 | | |
| DRAWN BY : DGE | 01/10 | REV. 4/15 | MAA/TMG |
| CHECKED BY : MKT | 01/10 | | |

DOCUMENT NOT CONSIDERED FINAL UNLESS ALL SIGNATURES COMPLETED

| REVISIONS | | | | | | SHEET NO. |
|---|---|---|---|---|---|---|
| NO. | BY: | DATE: | NO. | BY: | DATE: | S-10 |
| 1 | | | 3 | | | TOTAL SHEETS |
| 2 | | | 4 | | | 17 |

06-DEC-2016 14:30
S:\DPG1\Division2\17BP.2.R.67_Beaufort BR11\Structure\Final_Plans\17BP.2.R.67_SMU_CS.dgn
gdickey

STD. NO. EB_33_90S

## NOTES

STIRRUPS IN CAP MAY BE SHIFTED AS NECESSARY TO CLEAR DOWELS.

THE CONCRETE IN THE SHADED AREA OF THE WING SHALL BE POURED AFTER THE VERTICAL CONCRETE BARRIER RAIL IS CAST IF SLIP FORMING IS USED.

FOR PILE SPLICE DETAILS, SEE SHEET 4 OF 4.

FOR WING DETAILS, SEE SHEET 3 OF 4.

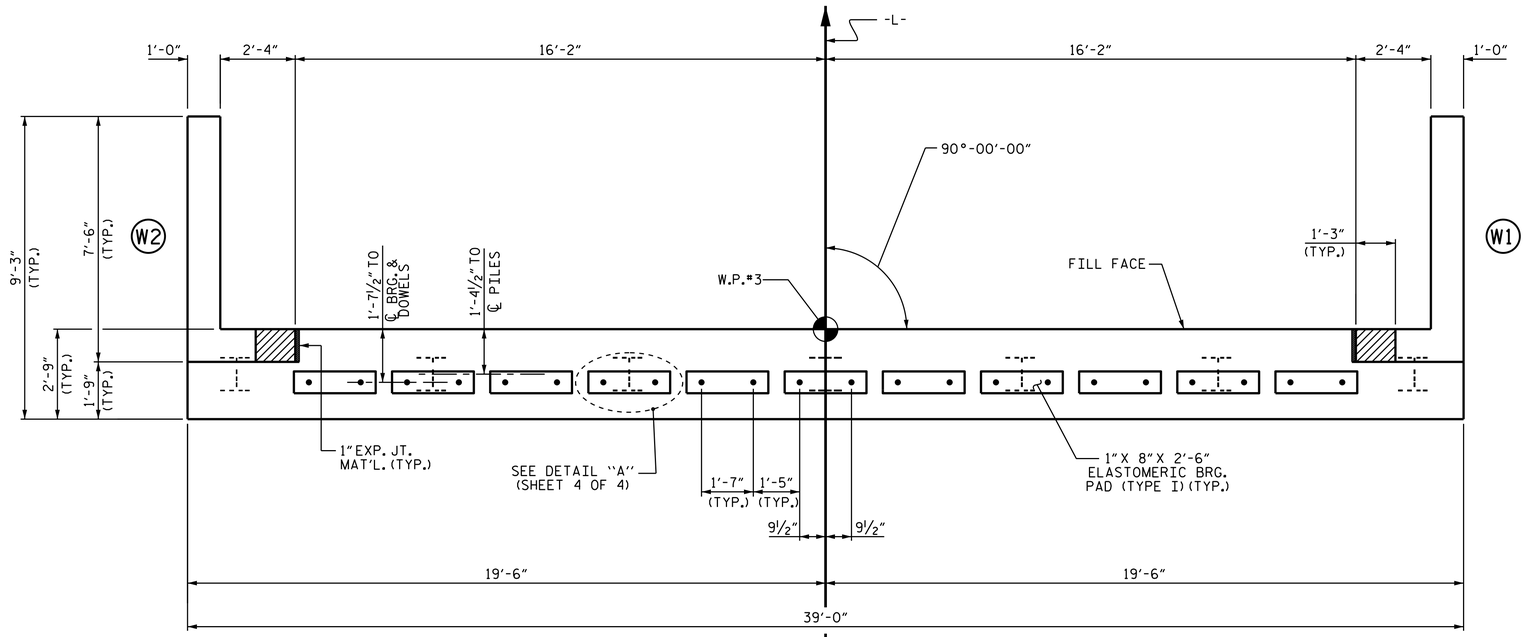


## PLAN

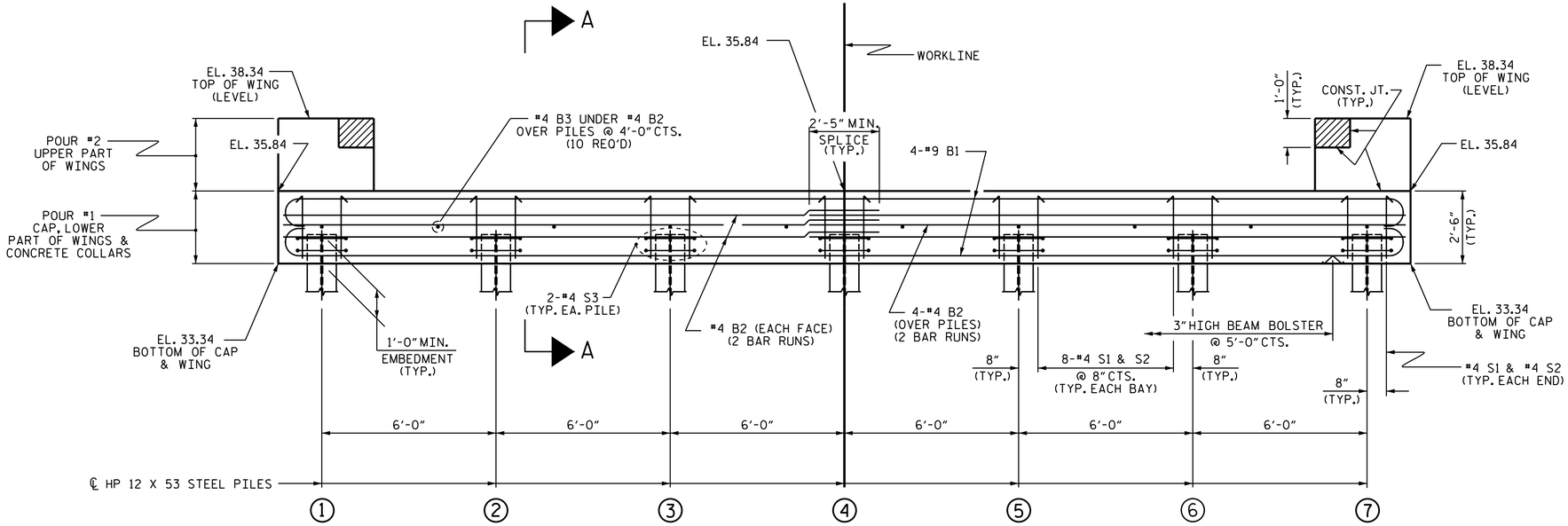


## ELEVATION

WINGS NOT SHOWN FOR CLARITY.
FOR SECTION A-A, SEE SHEET 4 OF 4.
CONCRETE COLLARS FOR STEEL PILES NOT SHOWN IN PLAN AND ELEVATION VIEWS FOR CLARITY.
SEE "CORROSION PROTECTION FOR STEEL PILES DETAIL", SHEET 4 OF 4.

PROJECT NO. 17BP.2.R.67
BEAUFORT COUNTY
STATION: 14+78.00 -L-

SHEET 2 OF 4

STATE OF NORTH CAROLINA
DEPARTMENT OF TRANSPORTATION
RALEIGH

SUBSTRUCTURE

END BENT No. 2

NORTH CAROLINA PROFESSIONAL SEAL 21271 ENGINEER GREGORY W. DICKEY

DocuSigned by: Greg Dickey
12/12/2016

| | | | |
|---|---|---|---|
| ASSEMBLED BY : G. KOUCHEKI | DATE : 9/2016 | | |
| CHECKED BY : P. BRYANT | DATE : 11/2016 | | |
| DRAWN BY : DGE 01/10 | REV. 4/15 | MAA/TMG | |
| CHECKED BY : MKT 01/10 | | | |

DOCUMENT NOT CONSIDERED FINAL UNLESS ALL SIGNATURES COMPLETED

| REVISIONS | | | | | | SHEET NO. |
|---|---|---|---|---|---|---|
| NO. | BY: | DATE: | NO. | BY: | DATE: | S-11 |
| 1 | | | 3 | | | TOTAL SHEETS |
| 2 | | | 4 | | | 17 |

06-DEC-2016 14:30
S:\DPGI\Division2\17BP.2.R.67_Beaufort BR11\Structure\Final_Plans\17BP.2.R.67_SMU_CS.dgn
gdickey

STD. NO. EB_33_90S

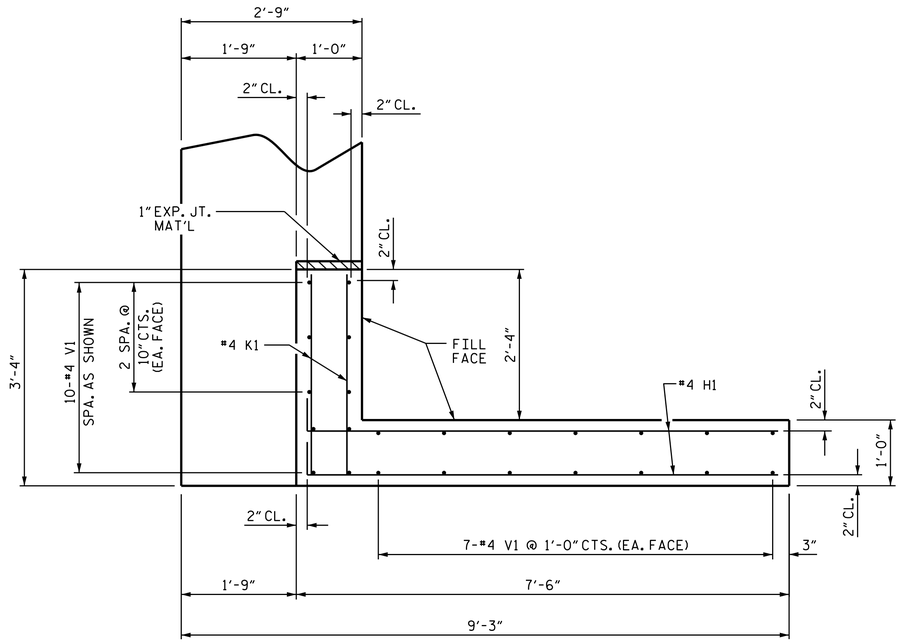


PLAN OF WING (W1)

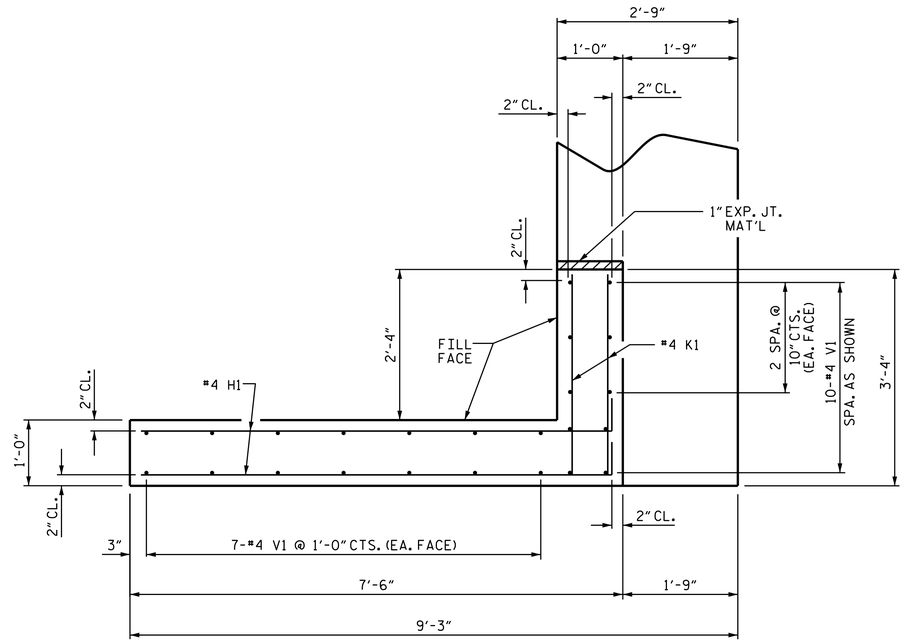


PLAN OF WING (W2)

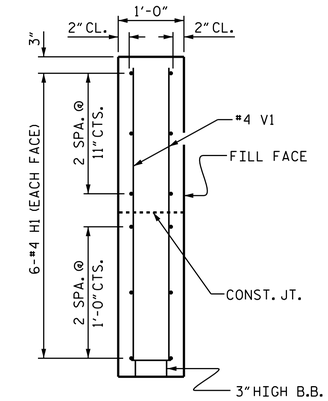


SECTION X-X

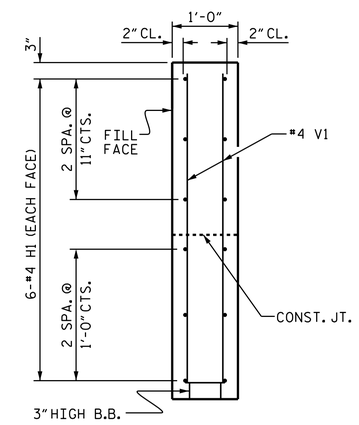


SECTION Y-Y

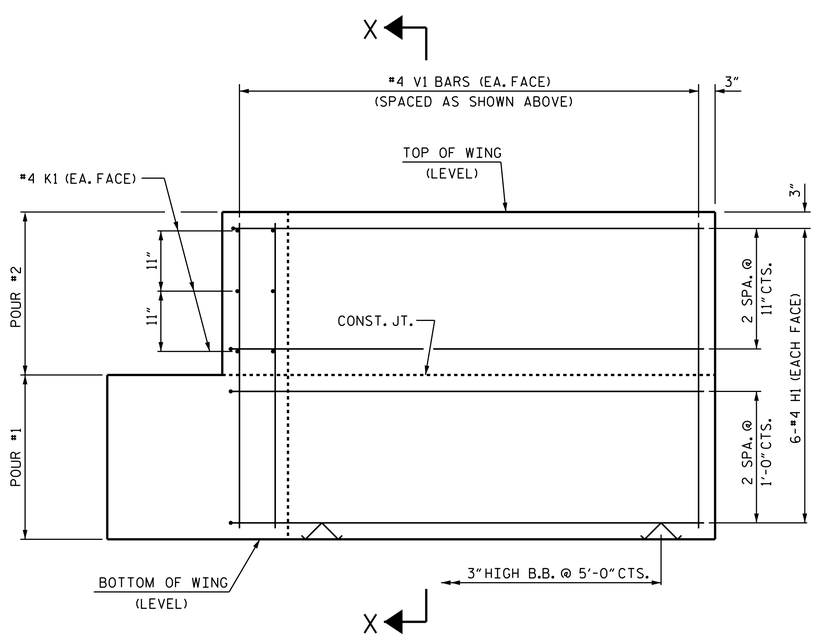


ELEVATION OF WING (W1)

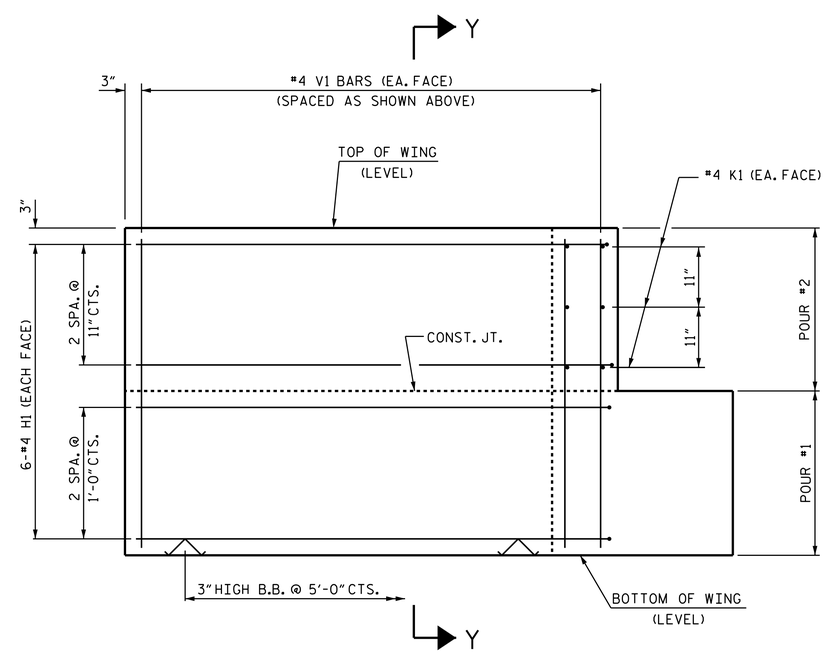


ELEVATION OF WING (W2)

WING DETAILS

PROJECT NO. 17BP.2.R.67

BEAUFORT COUNTY

STATION: 14+78.00 -L-

SHEET 3 OF 4

STATE OF NORTH CAROLINA
DEPARTMENT OF TRANSPORTATION
RALEIGH

SUBSTRUCTURE

END BENT
WING DETAILS

NORTH CAROLINA PROFESSIONAL SEAL 21271 ENGINEER GREGORY W. DICKEY

DocuSigned by: Greg Dickey
12/12/2016

DOCUMENT NOT CONSIDERED FINAL UNLESS ALL SIGNATURES COMPLETED

| | | | |
|---|---|---|---|
| ASSEMBLED BY : G. KOUCHEKI | DATE : 9/2016 | | |
| CHECKED BY : P. BRYANT | DATE : 11/2016 | | |
| DRAWN BY : DGE 02/10 | REV. 4/15 | MAA/TMG | |
| CHECKED BY : MKT 02/10 | | | |

| REVISIONS | | | | | | SHEET NO. |
|---|---|---|---|---|---|---|
| NO. | BY: | DATE: | NO. | BY: | DATE: | S-12 |
| 1 | | | 3 | | | TOTAL SHEETS |
| 2 | | | 4 | | | 17 |

06-DEC-2016 14:30
S:\DPG1\Division2\17BP.2.R.67_Beaufort BR11\Structure\Final_Plans\17BP.2.R.67_SMU_CS.dgn
gdickey

STD. NO. EB_33_90S

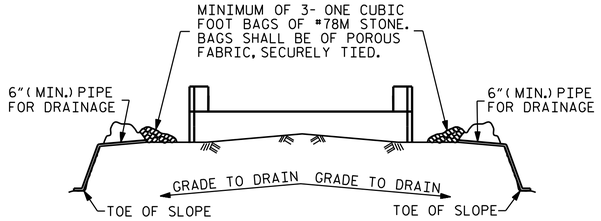


BAGGED STONE AND PIPE SHALL BE PLACED IMMEDIATELY AFTER COMPLETION OF END BENT EXCAVATION. PIPE MAY BE EITHER CONCRETE, CORRUGATED STEEL, CORRUGATED ALUMINUM ALLOY, OR CORRUGATED PLASTIC. PERFORATED PIPE WILL NOT BE ALLOWED.

BAGGED STONE SHALL REMAIN IN PLACE UNTIL THE ENGINEER DIRECTS THAT IT BE REMOVED. THE CONTRACTOR SHALL REMOVE AND DISPOSE OF SILT ACCUMULATIONS AT BAGGED STONE WHEN SO DIRECTED BY THE ENGINEER. BAGS SHALL BE REMOVED AND REPLACED WHENEVER THE ENGINEER DETERMINES THAT THEY HAVE DETERIORATED AND LOST THEIR EFFECTIVENESS.

NO SEPARATE PAYMENT WILL BE MADE FOR THIS WORK AND THE ENTIRE COST OF THIS WORK SHALL BE INCLUDED IN THE UNIT CONTRACT PRICE BID FOR THE SEVERAL PAY ITEMS.

## TEMPORARY DRAINAGE AT END BENT

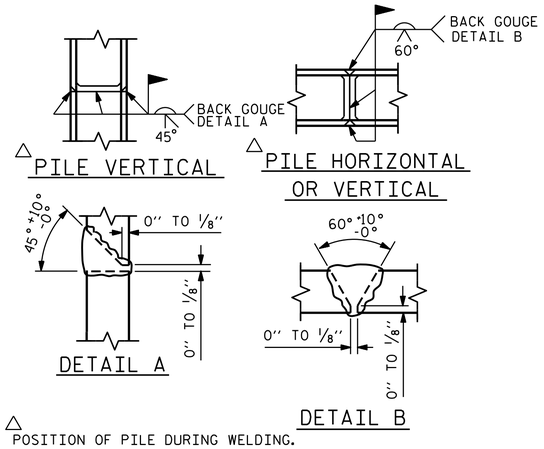


△ POSITION OF PILE DURING WELDING.

## PILE SPLICE DETAILS

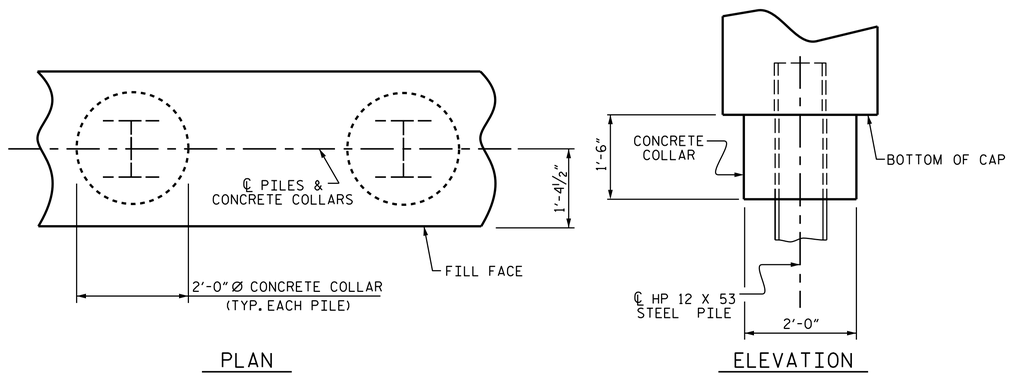


## CORROSION PROTECTION FOR STEEL PILES DETAIL

(END BENT No. 1 SHOWN, END BENT No. 2 SIMILAR BY ROTATION)

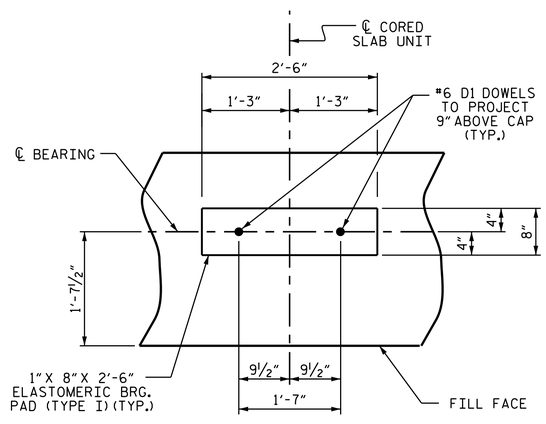


## DETAIL "A"

(END BENT No. 1 SHOWN, END BENT No. 2 SIMILAR BY ROTATION)

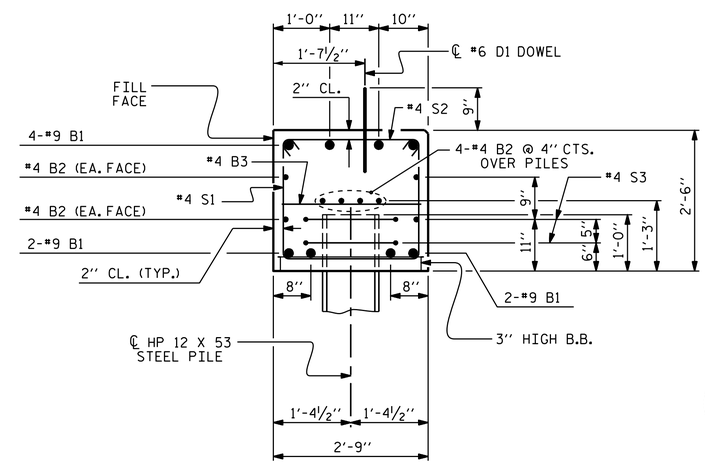


## SECTION A-A

(CONCRETE COLLAR NOT SHOWN FOR CLARITY. SEE "CORROSION PROTECTION FOR STEEL PILES DETAIL.")

## BAR TYPES

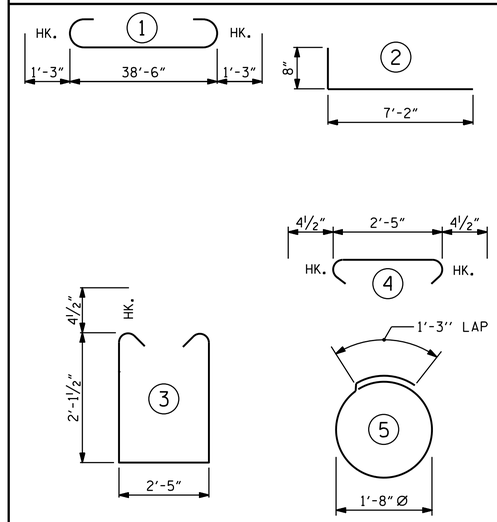


ALL BAR DIMENSIONS ARE OUT TO OUT.

| END BENT No. 1 | | END BENT No. 2 | |
|---|---|---|---|
| HP 12 X 53 STEEL PILES | | HP 12 X 53 STEEL PILES | |
| NO: 7 | LIN. FT.= 525 | NO: 7 | LIN. FT.= 490 |
| PILE REDRIVES | 4 EACH | PILE REDRIVES | 4 EACH |

## BILL OF MATERIAL

### FOR ONE END BENT

| BAR | NO. | SIZE | TYPE | LENGTH | WEIGHT |
|---|---|---|---|---|---|
| B1 | 8 | #9 | 1 | 41'-0" | 1115 |
| B2 | 16 | #4 | STR | 20'-7" | 220 |
| B3 | 10 | #4 | STR | 2'-5" | 16 |
| D1 | 22 | #6 | STR | 1'-6" | 50 |
| H1 | 24 | #4 | 2 | 7'-10" | 126 |
| K1 | 12 | #4 | STR | 2'-11" | 23 |
| S1 | 50 | #4 | 3 | 7'-5" | 248 |
| S2 | 50 | #4 | 4 | 3'-2" | 106 |
| S3 | 14 | #4 | 5 | 6'-6" | 61 |
| V1 | 48 | #4 | STR | 4'-8" | 150 |
| REINFORCING STEEL (FOR ONE END BENT) | | | | | 2115 LBS. |

CLASS A CONCRETE BREAKDOWN (FOR ONE END BENT)

| | | |
|---|---|---|
| POUR #1 | CAP, LOWER PART OF WINGS & COLLARS | 12.4 C.Y. |
| POUR #2 | UPPER PART OF WINGS | 1.8 C.Y. |
| TOTAL CLASS A CONCRETE | | 14.2 C.Y. |

PROJECT NO. 17BP.2.R.67

BEAUFORT COUNTY

STATION: 14+78.00 -L-

SHEET 4 OF 4

STATE OF NORTH CAROLINA
DEPARTMENT OF TRANSPORTATION
RALEIGH

SUBSTRUCTURE

END BENT No. 1 & 2 DETAILS

NORTH CAROLINA PROFESSIONAL SEAL 21271 ENGINEER GREGORY W. DICKEY

DocuSigned by: Greg Dickey 6B4F4B8BCF58486... 12/12/2016

DOCUMENT NOT CONSIDERED FINAL UNLESS ALL SIGNATURES COMPLETED

| REVISIONS | | | | | | |
|---|---|---|---|---|---|---|
| NO. | BY: | DATE: | NO. | BY: | DATE: | |
| 1 | | | 3 | | | |
| 2 | | | 4 | | | |

SHEET NO. S-13

TOTAL SHEETS 17

| | | | |
|---|---|---|---|
| ASSEMBLED BY : G. KOUCHEKI | | DATE : 9/2016 | |
| CHECKED BY : P. BRYANT | | DATE : 11/2016 | |
| DRAWN BY : DGE | 12/09 | REV. 11/14 | MAA/TMG |
| CHECKED BY : MKT | 01/10 | | |

06-DEC-2016 14:30
S:\DPG1\Division2\17BP.2.R.67_Beaufort BR11\Structure\Final_Plans\17BP.2.R.67_SMU_CS.dgn
gdickey

STD. NO. EB_33_90S

## NOTES

STIRRUPS IN CAP MAY BE SHIFTED AS NECESSARY TO CLEAR DOWELS.

★ INVERT ALTERNATE STIRRUPS.

GALVANIZE THE TOP OF EACH INTERIOR BENT PILE A MINIMUM OF 30 FEET. GALVANIZE IN ACCORDANCE WITH SECTION 1076 OF THE STANDARD SPECIFICATIONS.

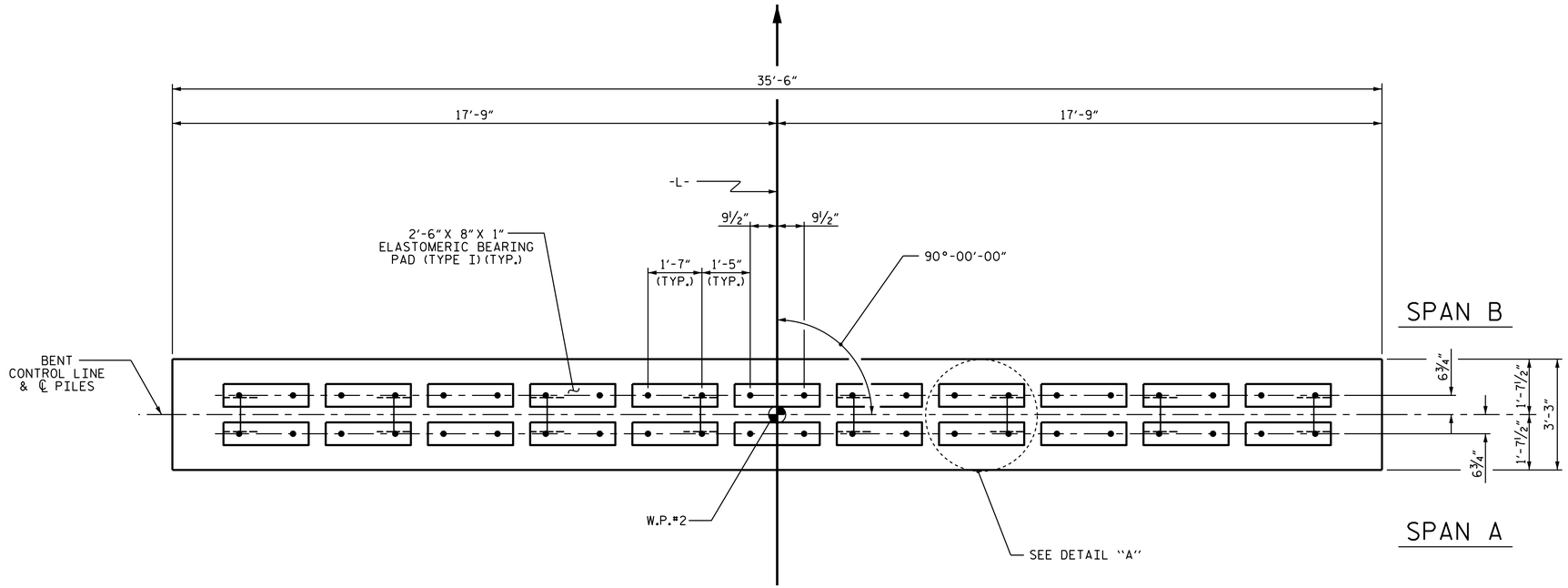


PLAN

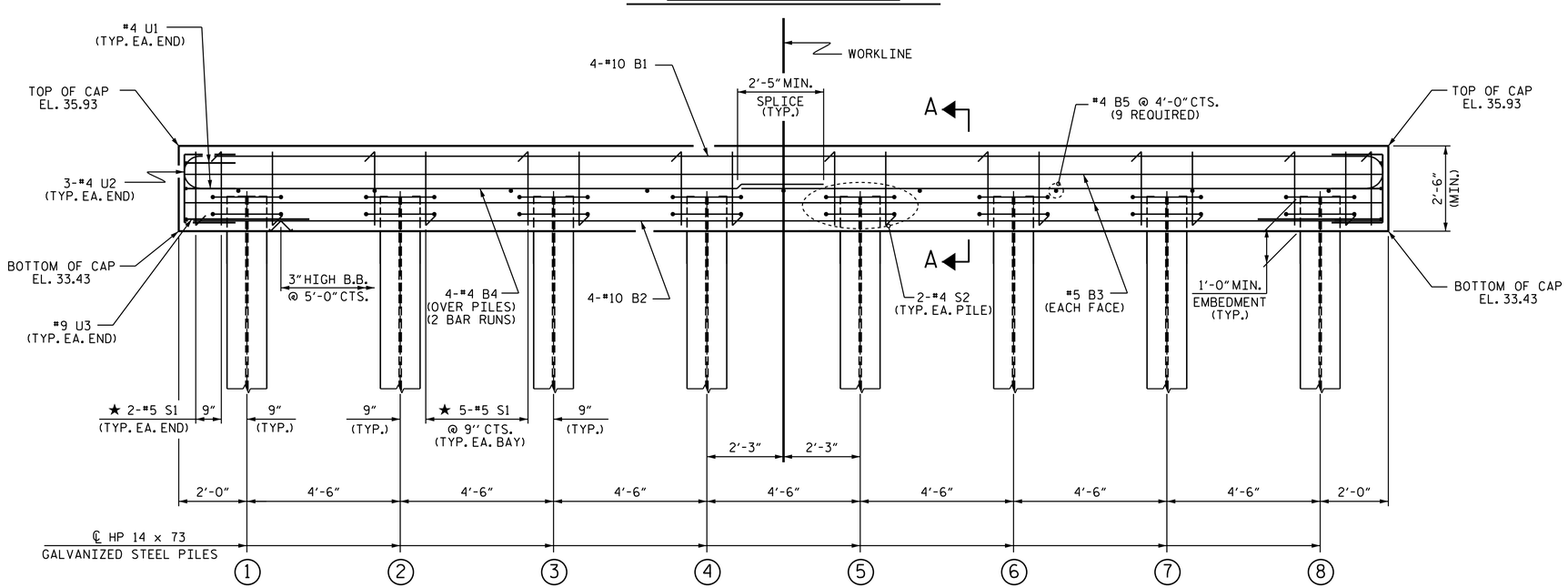


ELEVATION

FOR SECTION A-A, SEE SHEET 2 OF 2

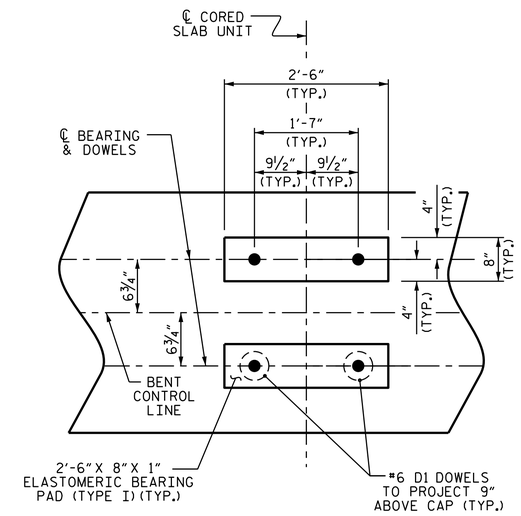


DETAIL "A"

(DIMENSIONS ARE TYPICAL EACH BEARING)

PROJECT NO. 17BP.2.R.67

BEAUFORT COUNTY

STATION: 14+78.00 -L-

SHEET 1 OF 2

STATE OF NORTH CAROLINA
DEPARTMENT OF TRANSPORTATION
RALEIGH

SUBSTRUCTURE

BENT No. 1

NORTH CAROLINA PROFESSIONAL SEAL 21271 ENGINEER GREGORY W. DICKEY

DocuSigned by: Greg Dickey
12/12/2016

DOCUMENT NOT CONSIDERED FINAL UNLESS ALL SIGNATURES COMPLETED

| REVISIONS | | | | | | SHEET NO. |
|---|---|---|---|---|---|---|
| NO. | BY: | DATE: | NO. | BY: | DATE: | S-14 |
| 1 | | | 3 | | | TOTAL SHEETS |
| 2 | | | 4 | | | 17 |

| | |
|---|---|
| ASSEMBLED BY : G. KOUCHEKI | DATE : 9/2016 |
| CHECKED BY : P. BRYANT | DATE : 11/2016 |
| DRAWN BY : DGE 05/10 | REV. 11/14 MAA/TMG |
| CHECKED BY : MKT 05/10 | |

06-DEC-2016 14:30
S:\DPG1\Division2\17BP.2.R.67_Beaufort BRII\Structure\Final_Plans\17BP.2.R.67_SMU_CS.dgn
gdickey

STD. NO. 14" HP_BT_33_90S_<60'

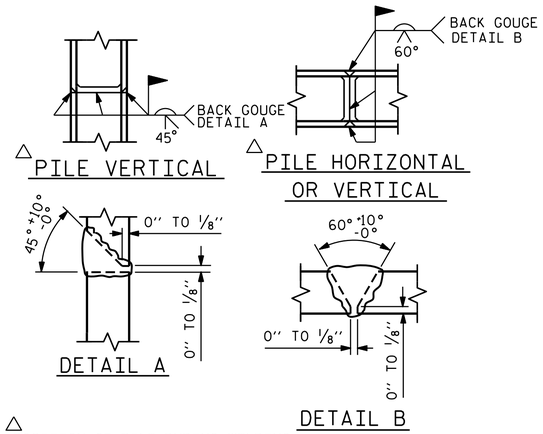


△ POSITION OF PILE DURING WELDING.

## PILE SPLICE DETAILS

## BAR TYPES

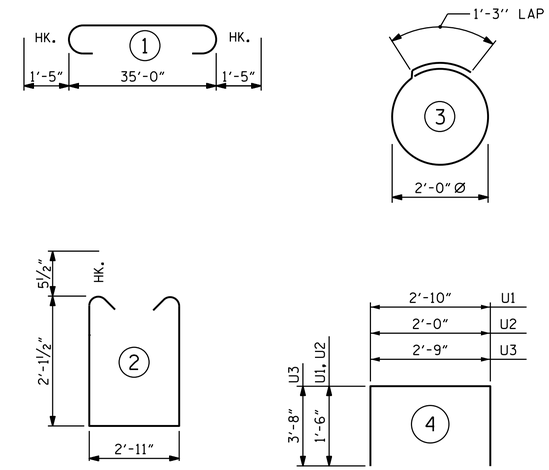


ALL BAR DIMENSIONS ARE OUT TO OUT.

## BILL OF MATERIAL
### FOR ONE BENT

| BAR | NO. | SIZE | TYPE | LENGTH | WEIGHT |
|---|---|---|---|---|---|
| B1 | 4 | #10 | 1 | 37'-10" | 651 |
| B2 | 4 | #10 | STR | 35'-2" | 605 |
| B3 | 4 | #5 | STR | 35'-2" | 147 |
| B4 | 8 | #4 | STR | 18'-10" | 101 |
| B5 | 9 | #4 | STR | 2'-11" | 18 |
| | | | | | |
| D1 | 44 | #6 | STR | 1'-6" | 99 |
| | | | | | |
| S1 | 39 | #5 | 2 | 8'-1" | 329 |
| S2 | 16 | #4 | 3 | 7'-7" | 81 |
| | | | | | |
| U1 | 4 | #4 | 4 | 5'-10" | 16 |
| U2 | 6 | #4 | 4 | 5'-0" | 20 |
| U3 | 2 | #9 | 4 | 10'-1" | 69 |
| | | | | | |

REINFORCING STEEL (FOR ONE BENT) 2136 LBS

CLASS A CONCRETE BREAKDOWN (FOR ONE BENT)

TOTAL CLASS A CONCRETE 10.7 C.Y.

HP 14 X 73 GALVANIZED STEEL PILES (FOR ONE BENT)

No. 8 LIN. FT. 640

PILE REDRIVES 4 EACH

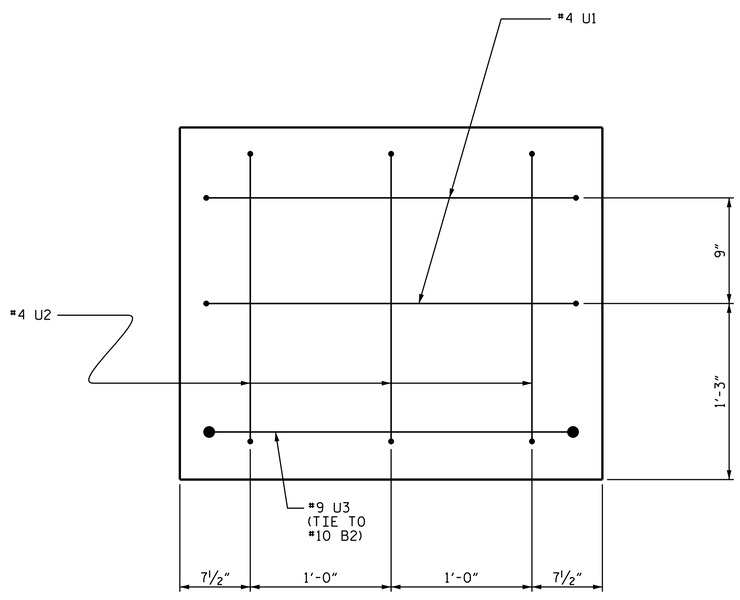


## END OF CAP VIEW
(TYPICAL BOTH ENDS)

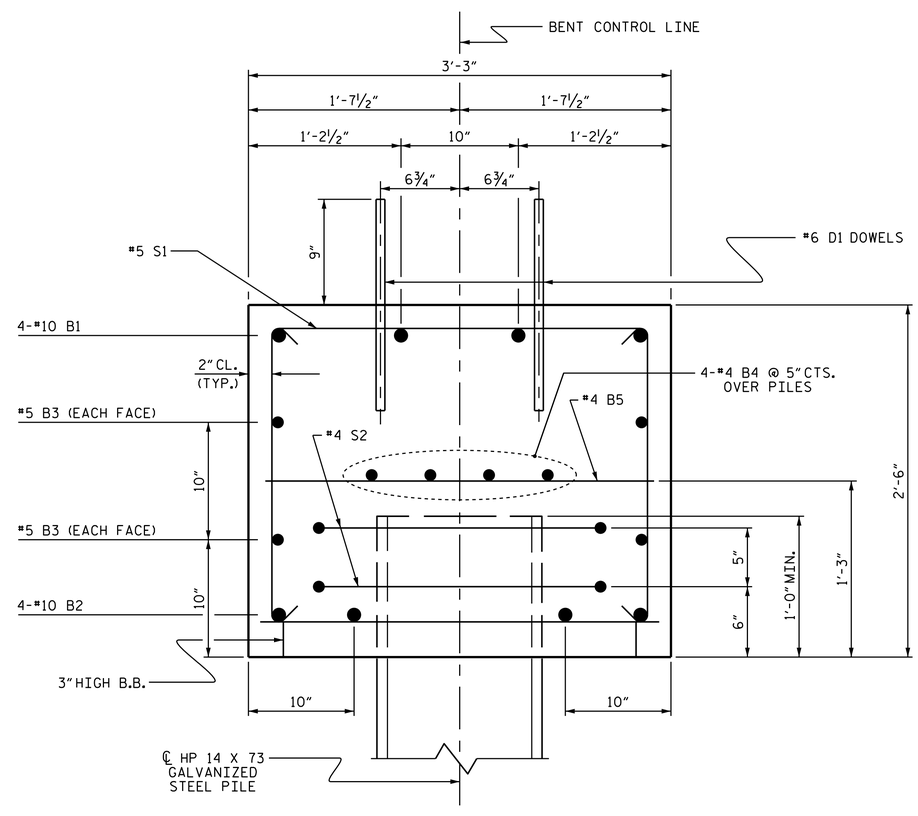


## SECTION A-A

PROJECT NO. 17BP.2.R.67
BEAUFORT COUNTY
STATION: 14+78.00 -L-

SHEET 2 OF 2

STATE OF NORTH CAROLINA
DEPARTMENT OF TRANSPORTATION
RALEIGH

SUBSTRUCTURE

BENT No. 1

NORTH CAROLINA PROFESSIONAL SEAL 21271 ENGINEER GREGORY W. DICKEY

DocuSigned by: Greg Dickey
12/12/2016

DOCUMENT NOT CONSIDERED FINAL UNLESS ALL SIGNATURES COMPLETED

| REVISIONS | | | | | | |
|---|---|---|---|---|---|---|
| NO. | BY: | DATE: | NO. | BY: | DATE: | |
| 1 | | | 3 | | | |
| 2 | | | 4 | | | |

SHEET NO. S-15
TOTAL SHEETS 17

DRAWN BY : G. KOUCHEKI DATE : 9/2016
CHECKED BY : P. BRYANT DATE : 11/2016
DRAWN BY : DGE 05/10
CHECKED BY : MKT 05/10
REV. 11/14 MAA/TMG

06-DEC-2016 14:30
S:\DPG1\Division2\17BP.2.R.67_Beaufort BR11\Structure\Final_Plans\17BP.2.R.67_SMU_CS.dgn
gdickey

STD. NO. 14" HP_BT_33_90S_<60'

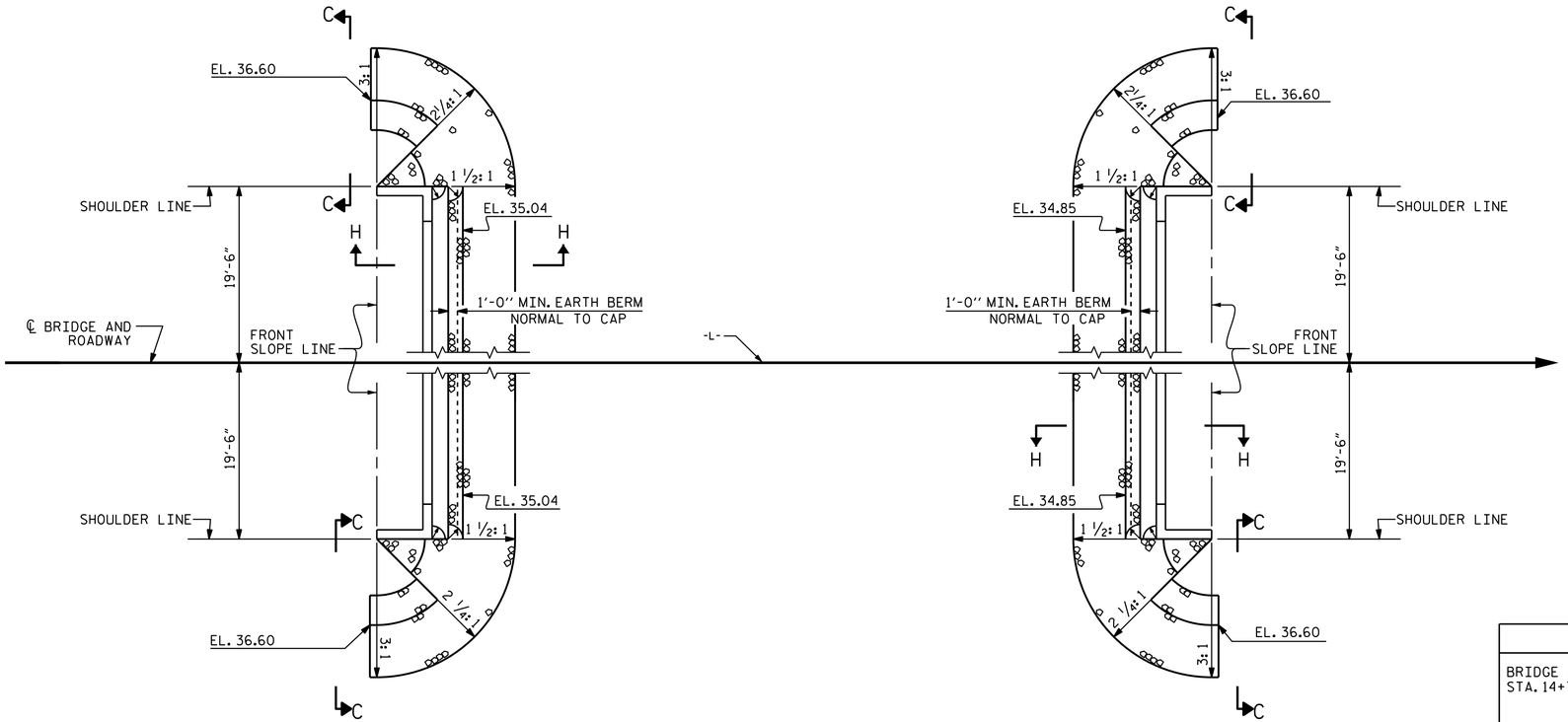


END BENT 1

END BENT 2

## RIP RAP DETAILS

| ESTIMATED QUANTITIES | | |
|---|---|---|
| BRIDGE @ STA. 14+78.00 -L- | RIP RAP CLASS II (2'-0" THICK) | GEOTEXTILE FOR DRAINAGE |
| | TONS | SQUARE YARDS |
| END BENT 1 | 60 | 65 |
| END BENT 2 | 75 | 85 |

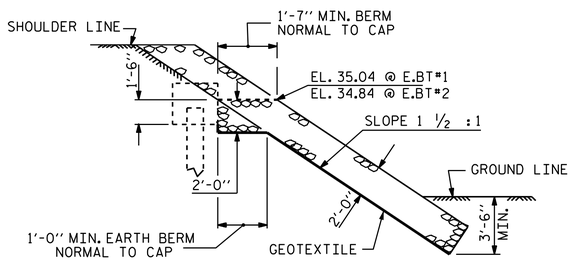


SECTION H-H

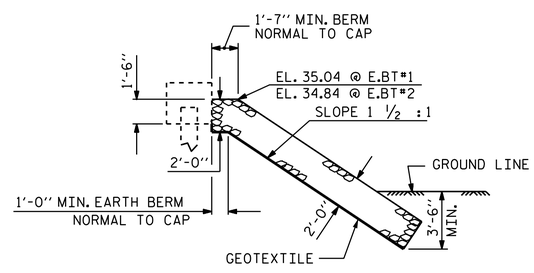


℄ SECTION
BERM RIP RAPPED

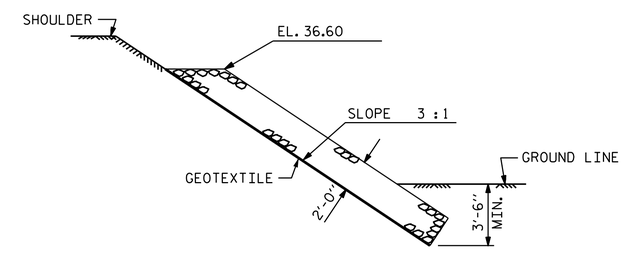


SECTION C-C

PROJECT NO. 17BP.2.R.67
BEAUFORT COUNTY
STATION: 14+78.00 -L-

STATE OF NORTH CAROLINA
DEPARTMENT OF TRANSPORTATION
RALEIGH
STANDARD
RIP RAP DETAILS

NORTH CAROLINA PROFESSIONAL SEAL 21271 ENGINEER GREGORY W. DICKEY
DocuSigned by: Greg Dickey
12/12/2016

DOCUMENT NOT CONSIDERED FINAL UNLESS ALL SIGNATURES COMPLETED

| REVISIONS | | | | | | |
|---|---|---|---|---|---|---|
| NO. | BY: | DATE: | NO. | BY: | DATE: | |
| 1 | | | 3 | | | |
| 2 | | | 4 | | | |

SHEET NO. S-16
TOTAL SHEETS 17

| | | | |
|---|---|---|---|
| ASSEMBLED BY : G. KOUCHEKI | DATE : 9/2016 | | |
| CHECKED BY : P. BRYANT | DATE : 11/2016 | | |
| DRAWN BY : REK 1/84 | REV. 5/1/06R | TLA/GM | |
| CHECKED BY : RDU 1/84 | REV. 10/1/11 | MAA/GM | |
| | REV. 12/21/11 | MAA/GM | |

06-DEC-2016 14:30
S:\DPG1\Division2\17BP.2.R.67_Beaufort BR11\Structure\Final_Plans\17BP.2.R.67_SMU_CS.dgn
gdickey

STD. NO. RR1

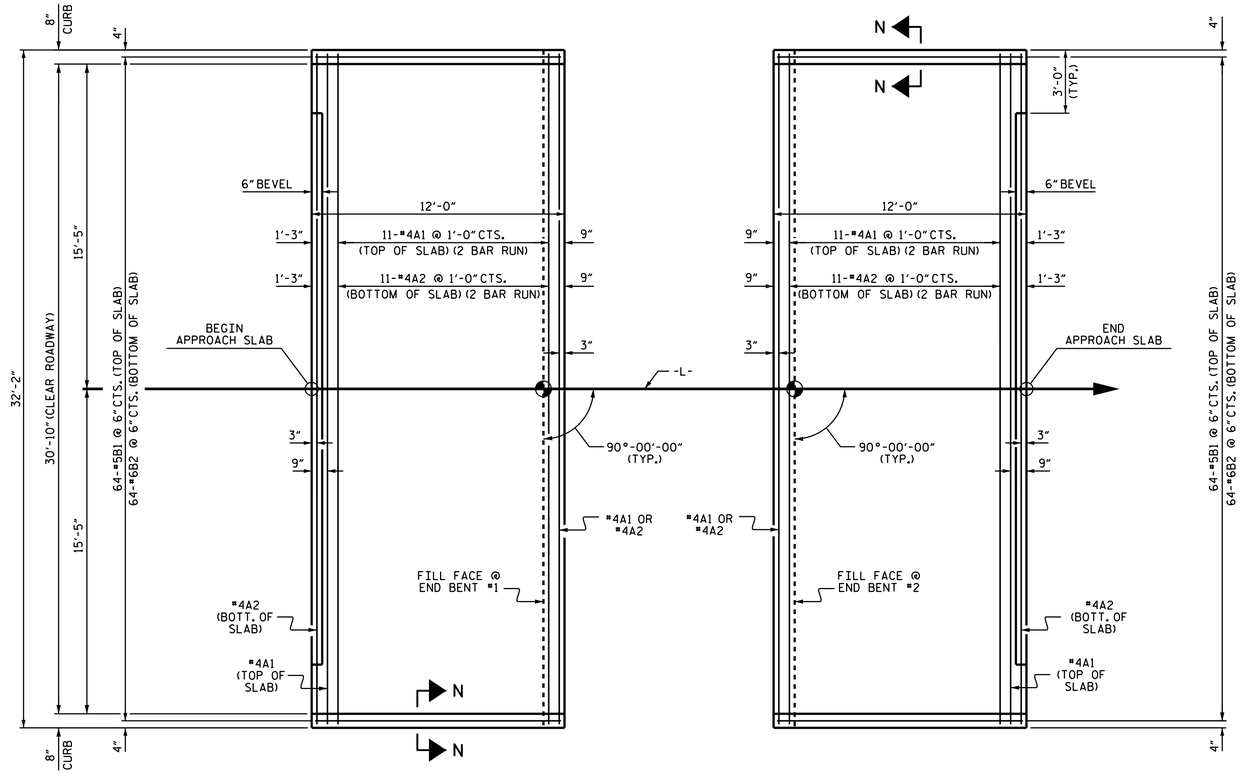


PLAN @ END BENT #1

PLAN @ END BENT #2

DIMENSIONS SHOWN ARE TYPICAL FOR BOTH APPROACH SLABS

## NOTES

FOR REINFORCED BRIDGE APPROACH FILL INCLUDING GEOTEXTILE, IMPERMEABLE GEOMEMBRANE, 4" Ø DRAINAGE PIPE, #78M STONE, AND SELECT MATERIAL, SEE ROADWAY PLANS.

AREA BETWEEN THE WINGWALL AND APPROACH SLAB SHALL BE GRADED TO DRAIN THE WATER AWAY FROM THE FILL FACE OF THE BRIDGE AND SHALL BE PAVED. SEE ROADWAY PLANS.

APPROACH SLAB GROOVING IS NOT REQUIRED.

## BILL OF MATERIAL

### APPROACH SLAB AT EB #1

| BAR | NO. | SIZE | TYPE | LENGTH | WEIGHT |
|---|---|---|---|---|---|
| * A1 | 26 | #4 | STR | 16'-11" | 294 |
| A2 | 26 | #4 | STR | 16'-9" | 291 |
| * B1 | 64 | #5 | STR | 11'-2" | 745 |
| B2 | 64 | #6 | STR | 11'-8" | 1121 |
| REINFORCING STEEL | | | | LBS. | 1412 |
| * EPOXY COATED REINFORCING STEEL | | | | LBS. | 1039 |
| CLASS AA CONCRETE | | | | C. Y. | 18.4 |

### APPROACH SLAB AT EB #2

| BAR | NO. | SIZE | TYPE | LENGTH | WEIGHT |
|---|---|---|---|---|---|
| * A1 | 26 | #4 | STR | 16'-11" | 294 |
| A2 | 26 | #4 | STR | 16'-9" | 291 |
| * B1 | 64 | #5 | STR | 11'-2" | 745 |
| B2 | 64 | #6 | STR | 11'-8" | 1121 |
| REINFORCING STEEL | | | | LBS. | 1412 |
| * EPOXY COATED REINFORCING STEEL | | | | LBS. | 1039 |
| CLASS AA CONCRETE | | | | C. Y. | 18.4 |

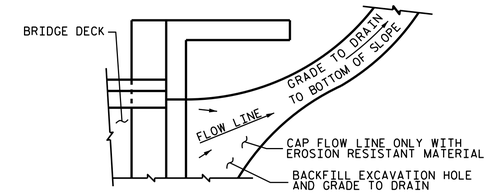


NOTE: IF THE APPROACH SLAB IS NOT CONSTRUCTED IMMEDIATELY AFTER THE BACKFILLING OF THE END BENT EXCAVATION, GRADE TO DRAIN TO THE BOTTOM OF THE SLOPE AND PROVIDE EROSION RESISTANT MATERIAL, SUCH AS FIBERGLASS ROVING OR AS DIRECTED BY THE ENGINEER TO PREVENT SOIL EROSION AND TO PROTECT THE AREA ADJACENT TO THE STRUCTURE. THE CONTRACTOR WILL BE REQUIRED TO REMOVE THESE MATERIALS PRIOR TO CONSTRUCTION OF THE APPROACH SLAB.

## TEMPORARY DRAINAGE DETAIL

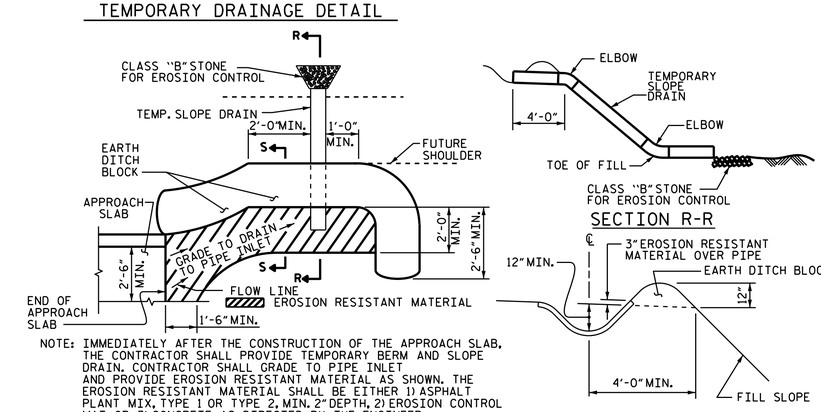


PLAN VIEW

SECTION R-R

SECTION S-S

NOTE: IMMEDIATELY AFTER THE CONSTRUCTION OF THE APPROACH SLAB, THE CONTRACTOR SHALL PROVIDE TEMPORARY BERM AND SLOPE DRAIN. CONTRACTOR SHALL GRADE TO PIPE INLET AND PROVIDE EROSION RESISTANT MATERIAL AS SHOWN. THE EROSION RESISTANT MATERIAL SHALL BE EITHER 1) ASPHALT PLANT MIX, TYPE 1 OR TYPE 2, MIN. 2" DEPTH, 2) EROSION CONTROL MAT, OR 3) CONCRETE, AS DIRECTED BY THE ENGINEER. THE SLOPE DRAIN SHALL CONSIST OF A NON-PERFORATED TEMPORARY DRAINAGE PIPE, 12 INCHES IN DIAMETER.

## TEMPORARY BERM AND SLOPE DRAIN DETAILS

(TO BE USED WHEN SHOULDER BERM GUTTER IS REQUIRED)

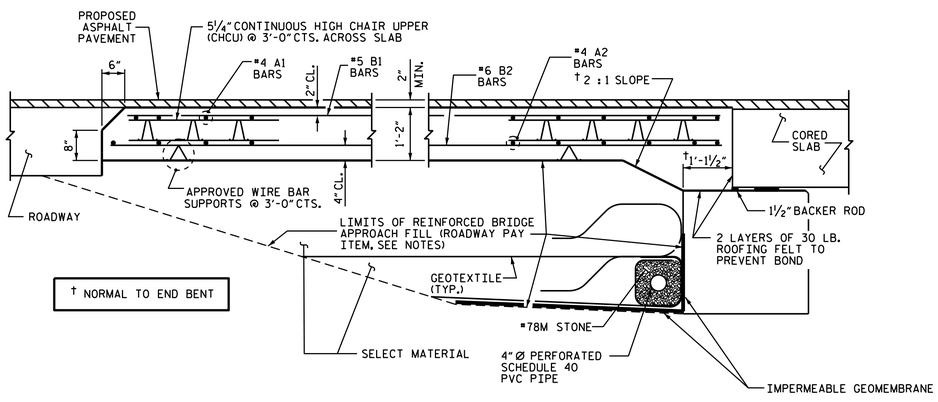


† NORMAL TO END BENT

## SECTION THRU SLAB

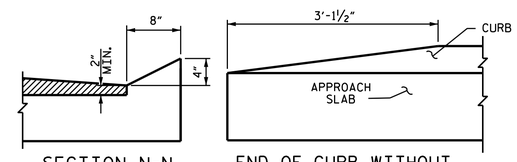


SECTION N-N

END OF CURB WITHOUT SHOULDER BERM GUTTER

## CURB DETAILS

| SPLICE LENGTHS | | |
|---|---|---|
| BAR SIZE | EPOXY COATED | UNCOATED |
| #4 | 2'-0" | 1'-9" |
| #5 | 2'-6" | 2'-2" |
| #6 | 3'-10" | 2'-7" |

PROJECT NO. 17BP.2.R.67

BEAUFORT COUNTY

STATION: 14+78.00. -L-

STATE OF NORTH CAROLINA
DEPARTMENT OF TRANSPORTATION
RALEIGH

STANDARD
BRIDGE APPROACH SLAB
FOR PRESTRESSED CONCRETE
CORED SLAB UNIT

90° SKEW

NORTH CAROLINA PROFESSIONAL SEAL 21271 ENGINEER GREGORY W. DICKEY

DocuSigned by: Greg Dickey
884E46B8C2E5B4B6...
12/12/2016

DOCUMENT NOT CONSIDERED FINAL UNLESS ALL SIGNATURES COMPLETED

| REVISIONS | | | | | | | | SHEET NO. |
|---|---|---|---|---|---|---|---|---|
| NO. | BY: | DATE: | NO. | BY: | DATE: | | | S-17 |
| 1 | | | 3 | | | | | TOTAL SHEETS |
| 2 | | | 4 | | | | | 17 |

| | | | |
|---|---|---|---|
| ASSEMBLED BY : G. KOUCHEKI | DATE : 9/2016 | | |
| CHECKED BY : P. BRYANT | DATE : 11/2016 | | |
| DRAWN BY : SHS/MAA 5-09 | REV. 9-15 | MAA/TMG | |
| CHECKED BY : BCH 5-09 | | | |

06-DEC-2016 14:30
S:\DPGI\Division2\17BP.2.R.67_Beaufort BRII\Structure\Final_Plans\17BP.2.R.67_SMU_CS.dgn
gdickey

STD. NO. BAS_33_90S

# STANDARD NOTES

## DESIGN DATA:

| | |
|---|---|
| SPECIFICATIONS | A.A.S.H.T.O. (CURRENT) |
| LIVE LOAD | SEE PLANS |
| IMPACT ALLOWANCE | SEE A.A.S.H.T.O. |
| STRESS IN EXTREME FIBER OF | |
| STRUCTURAL STEEL - AASHTO M270 GRADE 36 | 20,000 LBS. PER SQ. IN. |
| - AASHTO M270 GRADE 50W | 27,000 LBS. PER SQ. IN. |
| - AASHTO M270 GRADE 50 | 27,000 LBS. PER SQ. IN. |
| REINFORCING STEEL IN TENSION | |
| GRADE 60 | 24,000 LBS. PER SQ. IN. |
| CONCRETE IN COMPRESSION | 1,200 LBS. PER SQ. IN. |
| CONCRETE IN SHEAR | SEE A.A.S.H.T.O. |
| STRUCTURAL TIMBER - TREATED OR | |
| UNTREATED - EXTREME FIBER STRESS | 1,800 LBS. PER SQ. IN. |
| COMPRESSION PERPENDICULAR TO GRAIN OF TIMBER | 375 LBS. PER SQ. IN. |
| EQUIVALENT FLUID PRESSURE OF EARTH | 30 LBS. PER CU. FT. (MINIMUM) |

## MATERIAL AND WORKMANSHIP:

EXCEPT AS MAY OTHERWISE BE SPECIFIED ON PLANS OR IN THE SPECIAL PROVISIONS, ALL MATERIAL AND WORKMANSHIP SHALL BE IN ACCORDANCE WITH THE 2012 "STANDARD SPECIFICATIONS FOR ROADS AND STRUCTURES" OF THE N. C. DEPARTMENT OF TRANSPORTATION.

STEEL SHEET PILING FOR PERMANENT OR TEMPORARY APPLICATIONS SHALL BE HOT ROLLED.

## CONCRETE:

UNLESS OTHERWISE REQUIRED ON PLANS, CLASS A CONCRETE SHALL BE USED FOR ALL PORTIONS OF ALL STRUCTURES WITH THE EXCEPTION THAT: CLASS AA CONCRETE SHALL BE USED IN BRIDGE SUPERSTRUCTURES, ABUTMENT BACKWALLS, AND APPROACH SLABS; AND CLASS B CONCRETE SHALL BE USED FOR SLOPE PROTECTION AND RIP RAP.

## CONCRETE CHAMFERS:

UNLESS OTHERWISE NOTED ON THE PLANS, ALL EXPOSED CORNERS ON STRUCTURES SHALL BE CHAMFERED 3/4" WITH THE FOLLOWING EXCEPTIONS: TOP CORNERS OF CURBS MAY BE ROUNDED TO 1-1/2" RADIUS WHICH IS BUILT INTO CURB FORMS; CORNERS OF TRANSVERSE FLOOR EXPANSION JOINTS SHALL BE ROUNDED WITH A 1/4" FINISHING TOOL UNLESS OTHERWISE REQUIRED ON PLANS; AND CORNERS OF EXPANSION JOINTS IN THE ROADWAY FACES AND TOPS OF CURBS AND SIDEWALKS SHALL BE ROUNDED TO A 1/4" RADIUS WITH A FINISHING STONE OR TOOL UNLESS OTHERWISE REQUIRED ON PLANS.

## DOWELS:

DOWELS WHEN INDICATED ON PLANS AS FOR CULVERT EXTENSIONS, SHALL BE EMBEDDED AT LEAST 12" INTO THE OLD CONCRETE AND GROUTED INTO PLACE WITH 1:2 CEMENT MORTAR.

## ALLOWANCE FOR DEAD LOAD DEFLECTION, SETTLEMENT, ETC. IN CASTING SUPERSTRUCTURES:

BRIDGES SHALL BE BUILT ON THE GRADE OR VERTICAL CURVE SHOWN ON PLANS. SLABS, CURBS AND PARAPETS SHALL CONFORM TO THE GRADE OR CURVE.

ALL DIMENSIONS WHICH ARE GIVEN IN SECTION AND ARE AFFECTED BY DEAD LOAD DEFLECTIONS ARE DIMENSIONS AT CENTER LINE OF BEARING UNLESS OTHERWISE NOTED ON PLANS. IN SETTING FORMS FOR STEEL BEAM BRIDGES AND PRESTRESSED CONCRETE GIRDER BRIDGES, ADJUSTMENTS SHALL BE MADE DUE TO THE DEAD LOAD DEFLECTIONS FOR THE ELEVATIONS SHOWN. WHERE BLOCKS ARE SHOWN OVER BEAMS FOR BUILDING UP TO THE SLAB, THE VERTICAL DIMENSIONS OF THE BLOCKS SHALL BE ADJUSTED BETWEEN BEARINGS TO COMPENSATE FOR DEAD LOAD DEFLECTIONS, VERTICAL CURVE ORDINATE, AND ACTUAL BEAM CAMBER. WHERE BOTTOM OF SLAB IS IN LINE WITH BOTTOM OF TOP FLANGES, DEPTH OF SLAB BETWEEN BEARINGS SHALL BE ADJUSTED TO COMPENSATE FOR DEAD LOAD DEFLECTION, VERTICAL CURVE ORDINATE, AND ACTUAL BEAM CAMBER.

IN SETTING FALSEWORK AND FORMS FOR REINFORCED CONCRETE SPANS, AN ALLOWANCE SHALL BE MADE FOR DEAD LOAD DEFLECTIONS, SETTLEMENT OF FALSEWORK, AND PERMANENT CAMBER WHICH SHALL BE PROVIDED FOR IN ADDITION TO THE ELEVATIONS SHOWN. AFTER REMOVAL OF THE FALSEWORK, THE FINISHED STRUCTURES SHALL CONFORM TO THE PROFILE AND ELEVATIONS SHOWN ON THE PLANS AND CONSTRUCTION ELEVATIONS FURNISHED BY THE ENGINEER.

DETAILED DRAWINGS FOR FALSEWORK OR FORMS FOR BRIDGE SUPERSTRUCTURE AND ANY STRUCTURE OR PARTS OF A STRUCTURE AS NOTED ON THE PLANS SHALL BE SUBMITTED TO THE ENGINEER FOR APPROVAL BEFORE CONSTRUCTION OF THE FALSEWORK OR FORMS IS STARTED.

## REINFORCING STEEL:

ALL REINFORCING STEEL SHALL BE DEFORMED. DIMENSIONS RELATIVE TO PLACEMENT OF REINFORCING ARE TO CENTERS OF BARS UNLESS OTHERWISE INDICATED IN THE PLANS. DIMENSIONS ON BAR DETAILS ARE TO CENTERS OF BARS OR ARE OUT TO OUT AS INDICATED ON PLANS.

WIRE BAR SUPPORTS SHALL BE PROVIDED FOR REINFORCING STEEL WHERE INDICATED ON THE PLANS. WHEN BAR SUPPORT PIECES ARE PLACED IN CONTINUOUS LINES, THEY SHALL BE SO PLACED THAT THE ENDS OF THE SUPPORTING WIRES SHALL BE LAPPED TO LOCK LEGS ON ADJOINING PIECES.

## STRUCTURAL STEEL:

AT THE CONTRACTOR'S OPTION, HE MAY SUBSTITUTE 7/8" Ø SHEAR STUDS FOR THE ¾" Ø STUDS SPECIFIED ON THE PLANS. THIS SUBSTITUTION SHALL BE MADE AT THE RATE OF 3 - 7/8" Ø STUDS FOR 4 - 3/4" Ø STUDS, AND STUD SPACING CHANGES SHALL BE MADE AS NECESSARY TO PROVIDE THE SAME EQUIVALENT NUMBER OF 7/8" Ø STUDS ALONG THE BEAM AS SHOWN FOR 3/4" Ø STUDS BASED ON THE RATIO OF 3 - 7/8" Ø STUDS FOR 4 - 3/4" Ø STUDS. STUDS OF THE LENGTH SPECIFIED ON THE PLANS MUST BE PROVIDED. THE MAXIMUM SPACING SHALL BE 2'-0".

EXCEPT AT THE INTERIOR SUPPORTS OF CONTINUOUS BEAMS WHERE THE COVER PLATE IS IN CONTACT WITH BEARING PLATE, THE CONTRACTOR MAY, AT HIS OPTION, SUBSTITUTE FOR THE COVER PLATES DESIGNATED ON THE PLANS COVER PLATES OF THE EQUIVALENT AREA PROVIDED THESE PLATES ARE AT LEAST 5/16" IN THICKNESS AND DO NOT EXCEED A WIDTH EQUAL TO THE FLANGE WIDTH LESS 2" OR A THICKNESS EQUAL TO 2 TIMES THE FLANGE THICKNESS. THE SIZE OF FILLET WELDS SHALL CONFORM TO THE REQUIREMENTS OF THE CURRENT ANSI/AASHTO/AWS "BRIDGE WELDING CODE". ELECTROSLAG WELDING WILL NOT BE PERMITTED.

WITH THE SOLE EXCEPTION OF EDGES AT SURFACES WHICH BEAR ON OTHER SURFACES, ALL SHARP EDGES AND ENDS OF SHAPES AND PLATES SHALL BE SLIGHTLY ROUNDED BY SUITABLE MEANS TO A RADIUS OF APPROXIMATELY 1/16 INCH OR EQUIVALENT FLAT SURFACE AT A SUITABLE ANGLE PRIOR TO PAINTING, GALVANIZING, OR METALLIZING.

## HANDRAILS AND POSTS:

METAL STANDARDS AND FACES OF THE CONCRETE END POSTS FOR THE METAL RAIL SHALL BE SET NORMAL TO THE GRADE OF THE CURB, UNLESS OTHERWISE SHOWN ON PLANS. THE METAL RAIL AND TOPS OF CONCRETE POSTS USED WITH THE ALUMINUM RAIL SHALL BE BUILT PARALLEL TO THE GRADE OF THE CURB.

METAL HANDRAILS SHALL BE IN ACCORDANCE WITH THE PLANS. RAILS SHALL BE AS MANUFACTURED FOR BRIDGE RAILING. CASTINGS SHALL BE OF A UNIFORM APPEARANCE. FINS AND OTHER DEFORMATIONS RESULTING FROM CASTING OR OTHERWISE SHALL BE REMOVED IN A MANNER SO THAT A UNIFORM COLORING OF THE COMPLETED CASTING SHALL BE OBTAINED. CASTINGS WITH DISCOLORATIONS OR OF NON-UNIFORM COLORING WILL NOT BE ACCEPTED. CERTIFIED MILL REPORTS ARE REQUIRED FOR METAL RAILS AND POSTS.

## SPECIAL NOTES:

GENERALLY, IN CASE OF DISCREPANCY, THIS STANDARD SHEET OF NOTES SHALL GOVERN OVER THE SPECIFICATIONS, BUT THE REMAINDER OF THE PLANS SHALL GOVERN OVER NOTES HEREON, AND SPECIAL PROVISIONS SHALL GOVERN OVER ALL. SEE SPECIFICATIONS ARTICLE 105-4.

ENGLISH

JANUARY, 1990