PROJECT REFERENCE NO.	SHEET NO.
2CRJ0071J2	3

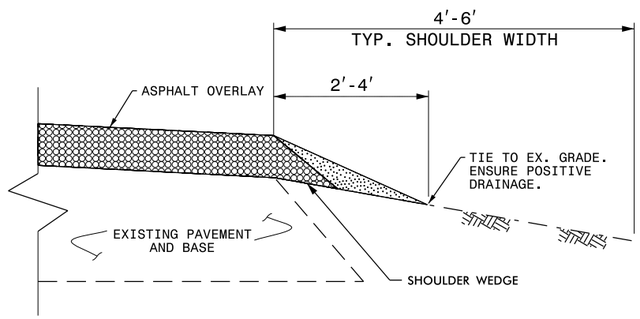

SHOULDER RECONSTRUCTION DETAIL

NOTE:

1. SHOULDERS SHALL BE RECONSTRUCTED AS SHOWN IN STD. DWG. NO. 560.01 & 560.02, WITH A MINIMUM SLOPE OF 1″ PER FOOT TO ENSURE POSITIVE DRAINAGE AWAY FROM THE ROADWAY.
2. A VEGETATIVE BUFFER SHALL BE MAINTAINED BETWEEN THE DISTURBED AREA ALONG THE EDGE OF PAVEMENT AND THE DITCH SHOULDER POINT TO MINIMIZE EROSION. PULLING DITCHES OR CUTTING SHOULDERS TO GENERATE BORROW MATERIAL WILL NOT BE ALLOWED.
3. REQUIRED BORROW MATERIAL MAY BE OBTAINED FROM NCDOT APPROVED BORROW PITS OR FROM NCDOT STOCKPILES. ANY EXCESS MATERIAL SHALL BE DISPOSED OF BY THE CONTRACTOR IN AN APPROVED DISPOSAL SITE.

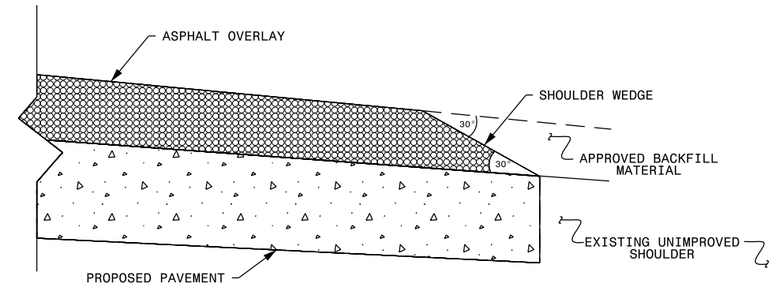

SHOULDER WEDGE DETAIL
(Resurfacing Projects w/ Widening or with Existing Pved Shoulder having no dropoffs)

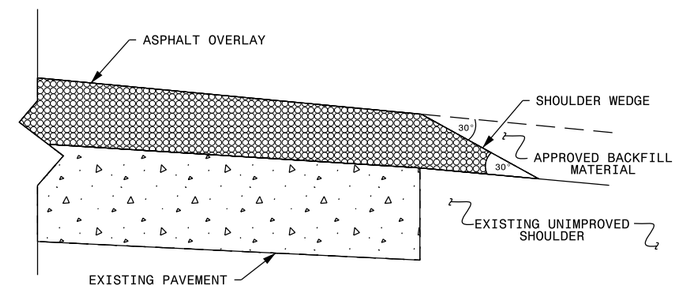

SHOULDER WEDGE DETAIL
(Resurfacing Projects w/ no Widening)

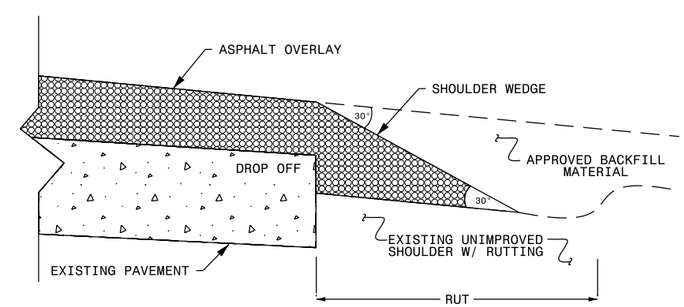

SHOULDER WEDGE DETAIL
(Resurfacing Adjacent to Rutted Shoulder)

DETAIL
SHOULDER WEDGE DETAILS

NOTES:
1. DETAIL DOES NOT APPLY TO OGAFC AND ULTRA-THIN BONDED WEARING COURSE.
2. BACKFILL SHOULDER WITH APPROVED MATERIAL.
3. THE SHOULDER WEDGE DEVICE MAY BE DISENGAGED AT PAVED DRIVEWAYS AND SIDE STREETS.